AO 120 (Rev. 08/10)

TO:	Mail Stop 8 Director of the U.S. Patent and Trademark Office P.O. Box 1450 Alexandria, VA 22313-1450	REPORT ON THE FILING OR DETERMINATION OF AN ACTION REGARDING A PATENT OR TRADEMARK

In Compliance with 35 U.S.C. § 290 and/or 15 U.S.C. § 1116 you are hereby advised that a court action has been filed in the U.S. District Court Eastern District of Texas - Marshall Division on the following

☐ Trademarks or ☑ Patents. (☐ the patent action involves 35 U.S.C. § 292.):

DOCKET NO.	DATE FILED	U.S. DISTRICT COURT
2:20-cv-00342	10/29/2020	Eastern District of Texas - Marshall Division

PLAINTIFF	DEFENDANT
G. Holdings Ltd.	Samsung Electronics Co., Ltd and Samsung Electronics America Inc.

PATENT OR TRADEMARK NO.	DATE OF PATENT OR TRADEMARK	HOLDER OF PATENT OR TRADEMARK
1 7,628,333	12/8/2009	G. Holdings Ltd.
2 9,022,294	5/5/2015	G. Holdings Ltd.
3		
4		
5		

In the above—entitled case, the following patent(s)/ trademark(s) have been included:

DATE INCLUDED	INCLUDED BY ☐ Amendment ☐ Answer ☐ Cross Bill ☐ Other Pleading	
PATENT OR TRADEMARK NO.	DATE OF PATENT OR TRADEMARK	HOLDER OF PATENT OR TRADEMARK
1		
2		
3		
4		
5		

In the above—entitled case, the following decision has been rendered or judgement issued:

DECISION/JUDGEMENT

Having considered the Stipulation, the Court ACCEPTS AND ACKNOWLEDGES that all claims in the above-captioned case are DISMISSED WITH PREJUDICE

CLERK	(BY) DEPUTY CLERK	DATE
David A. O'Toole	nkl	8/19/21

Copy 1—Upon initiation of action, mail this copy to Director **Copy 3—Upon termination of action, mail this copy to Director**
Copy 2—Upon filing document adding patent(s), mail this copy to Director **Copy 4—Case file copy**

Print Save As... Reset

GOOGLE EXHIBIT 1002

AO 120 (Rev. 08/10)

TO:	Mail Stop 8 Director of the U.S. Patent and Trademark Office P.O. Box 1450 Alexandria, VA 22313-1450	REPORT ON THE FILING OR DETERMINATION OF AN ACTION REGARDING A PATENT OR TRADEMARK

In Compliance with 35 U.S.C. § 290 and/or 15 U.S.C. § 1116 you are hereby advised that a court action has been filed in the U.S. District Court Eastern District of Texas - Marshall Division on the following

☐ Trademarks or ☑ Patents. (☐ the patent action involves 35 U.S.C. § 292.):

DOCKET NO.	DATE FILED	U.S. DISTRICT COURT
2:20-cv-00342	10/29/2020	Eastern District of Texas - Marshall Division

PLAINTIFF	DEFENDANT
G. Holdings Ltd.	Samsung Electronics Co., Ltd and Samsung Electronics America Inc.

PATENT OR TRADEMARK NO.	DATE OF PATENT OR TRADEMARK	HOLDER OF PATENT OR TRADEMARK
1 7,628,333	12/8/2009	G. Holdings Ltd.
2 9,022,294	5/5/2015	G. Holdings Ltd.
3		
4		
5		

In the above—entitled case, the following patent(s)/ trademark(s) have been included:

DATE INCLUDED	INCLUDED BY ☐ Amendment ☐ Answer ☐ Cross Bill ☐ Other Pleading	
PATENT OR TRADEMARK NO.	DATE OF PATENT OR TRADEMARK	HOLDER OF PATENT OR TRADEMARK
1		
2		
3		
4		
5		

In the above—entitled case, the following decision has been rendered or judgement issued:

DECISION/JUDGEMENT

CLERK	(BY) DEPUTY CLERK	DATE

Copy 1—Upon initiation of action, mail this copy to Director Copy 3—Upon termination of action, mail this copy to Director
Copy 2—Upon filing document adding patent(s), mail this copy to Director Copy 4—Case file copy

UNITED STATES PATENT AND TRADEMARK OFFICE

CERTIFICATE OF CORRECTION

PATENT NO. : 7,628,333 B2
APPLICATION NO. : 10/552912
DATED : December 8, 2009
INVENTOR(S) : Joël Gaillard

It is certified that error appears in the above-identified patent and that said Letters Patent is hereby corrected as shown below:

On the Title Page:

The first or sole Notice should read --

Subject to any disclaimer, the term of this patent is extended or adjusted under 35 U.S.C. 154(b) by 955 days.

Signed and Sealed this

Second Day of November, 2010

David J. Kappos

David J. Kappos
Director of the United States Patent and Trademark Office

UNITED STATES PATENT AND TRADEMARK OFFICE

UNITED STATES DEPARTMENT OF COMMERCE
United States Patent and Trademark Office
Address: COMMISSIONER FOR PATENTS
P.O. Box 1450
Alexandria, Virginia 22313-1450
www.uspto.gov

FRASER CLEMENS MARTIN & MILLER LLC
28366 KENSINGTON LANE
PERRYSBURG, OH 43551

Mail Date: 04/20/2010

Applicant	: Joel Gaillard	: DECISION ON REQUEST FOR
Patent Number	: 7628333	: RECALCULATION of PATENT
Issue Date	: 12/08/2009	: TERM ADJUSTMENT IN VIEW
Appliction No	: 10/552,912	: OF WYETH AND NOTICE OF INTENT TO
Filed	: 02/27/2006	: ISSUE CERTIFICATE OF CORRECTION
		:

The Request for Recalculation is **GRANTED** to the extent indicated.

The patent term adjustment has been determined to be **955** days. The USPTO will *sua sponte* issue a certificate of correction reflecting the amount of PTA days determined by the recalculation.

Prior to the issuance of the certificate of correction, the USPTO will afford patentee an opportunity to be heard and request reconsideration. Accordingly, patentee has **one month or thirty (30) days**, whichever is longer, to file a request for reconsideration of this patent term adjustment calculation. See 35 U.S.C. 154(b)(3)(B)(ii) and 37 CFR 1.322(a)(4). No extensions of time will be granted under 37 CFR 1.136.

Patentee should use document code PET.OP if electronically filing a request for reconsideration of this patent term adjustment calculation. The patentee must also include the information required by 37 CFR 1.705(b)(2) and the fee required by 37 CFR 1.18(e). If patentee does not file a timely request for reconsideration of this patent term adjustment calculation including the information required by 37 CFR 1.705(b)(2) and the fee required by 37 CFR 1.18(e), the USPTO will issue a certificate of correction reflecting the PTA determination noted above.

Patentee should be aware that in order to preserve the right to review in the United States District Court for the District of Columbia of the USPTO patent term adjustment determination, patentee must ensure that he or she also take the steps required under 35 U.S.C. 154(b)(4)(A) in a timely manner. Nothing in the request for recalculation should be construed as providing an alternative time frame for commencing a civil action under 35 U.S.C. 154(b)(4)(A).

Any questions concerning this decision should be directed to the Office of Patent Legal Administration at 571-272-7702.

PTO/SB/131 (01-10)
Approved for use through 02/28/2011. OMB 0651-0020
U.S. Patent and Trademark Office; U. S. DEPARTMENT OF COMMERCE
Under the Paperwork Reduction Act of 1995, no persons are required to respond to a collection of information unless it displays a valid OMB control number.

REQUEST FOR RECALCULATION OF PATENT TERM ADJUSTMENT IN VIEW OF *WYETH**

Attorney Docket Number: 1-37992	Patent Number: 7,628,333
Filing Date (or 371(b) or (f) Date): October 13, 2005	Issue Date: December 8, 2009
First Named Inventor: Joel Gaillard	
Title: PORTABLE ELECTRONIC DEVICE CAPABLE OF ALTERNATE DATA CONVEYANCE OPERATIONS RESPONSIVE TO AN INVARIABLE ACTIVATION COMMAND	

PATENTEE HEREBY REQUESTS RECALCULATION OF THE PATENT TERM ADJUSTMENT (PTA) UNDER 35 USC 154(b) INDICATED ON THE ABOVE-IDENTIFIED PATENT. THE PATENTEE'S SOLE BASIS FOR REQUESTING THE RECALCULATION IS THE USPTO'S PRE-*WYETH* INTERPRETATION OF 35 U.S.C. 154(b)(2)(A).

Note: This form is only for requesting a recalculation of PTA for patents issued before March 2, 2010, if the sole basis for requesting the recalculation is the USPTO's pre-*Wyeth* interpretation of 35 U.S.C. 154(b)(2)(A). See Instruction Sheet on page 2 for more information.

Patentees are reminded that to preserve the right to review in the United States District Court for the District of Columbia of the USPTO's patent term adjustment determination, a patentee must ensure that he or she also takes the steps required under 35 U.S.C. 154(b)(3) and (b)(4) and 37 CFR 1.705 in a timely manner.

**Wyeth v. Kappos*, No. 2009-1120 (Fed. Cir., Jan. 7, 2010).

Signature	Date March 3, 2010
Name (Print/Typed) James D. Miller	Registration Number 46,932

Note: *Signatures of all the inventors or assignees of record of the entire interest or their representative(s) are required in accordance with 37 CFR 1.33 and 11.18. Please see 37 CFR 1.4(d) for the form of the signature. If necessary, submit multiple forms for more than one signature, see below*.*

☐ *Total of _____ forms are submitted.

The information is required to obtain or retain a benefit by the public which is to file (and by the USPTO to process) an application. Confidentiality is governed by 35 U.S.C. 122 and 37 CFR 1.11 and 1.14. This collection is estimated to take 12 hours to complete, including gathering, preparing, and submitting the completed application form to the USPTO. Time will vary depending upon the individual case. Any comments on the amount of time you require to complete this form and/or suggestions for reducing this burden, should be sent to the Chief Information Officer, U.S. Patent and Trademark Office, U.S. Department of Commerce, P.O. Box 1450, Alexandria, VA 22313-1450. DO NOT SEND FEES OR COMPLETED FORMS TO THIS ADDRESS. SEND TO: **Commissioner for Patents, P.O. Box 1450, Alexandria, VA 22313-1450.**

If you need assistance in completing the form, call 1-800-PTO-9199 and select option 2.

Electronic Acknowledgement Receipt

EFS ID:	7133109
Application Number:	10552912
International Application Number:	
Confirmation Number:	6905
Title of Invention:	PORTABLE ELECTRONIC DEVICE CAPABLE OF ALTERNATE DATA CONVEYANCE OPERATIONS RESPONSIVE TO AN INVARIABLE ACTIVATION COMMAND
First Named Inventor/Applicant Name:	Joel Gaillard
Customer Number:	43935
Filer:	James D. Miller/Anne Fisher
Filer Authorized By:	James D. Miller
Attorney Docket Number:	1-37992
Receipt Date:	03-MAR-2010
Filing Date:	27-FEB-2006
Time Stamp:	15:48:35
Application Type:	U.S. National Stage under 35 USC 371

Payment information:

Submitted with Payment	no

File Listing:

Document Number	Document Description	File Name	File Size(Bytes)/ Message Digest	Multi Part /.zip	Pages (if appl.)
1	Request for PTA recalculation in view of Wyeth	37992_Request_for_Recalculation_filed_030310.pdf	72219 a1a63a31a852a3fb2c10181b98a77cabd5b5b9a3	no	1

Warnings:

Information:

Total Files Size (in bytes):	72219

This Acknowledgement Receipt evidences receipt on the noted date by the USPTO of the indicated documents, characterized by the applicant, and including page counts, where applicable. It serves as evidence of receipt similar to a Post Card, as described in MPEP 503.

New Applications Under 35 U.S.C. 111
If a new application is being filed and the application includes the necessary components for a filing date (see 37 CFR 1.53(b)-(d) and MPEP 506), a Filing Receipt (37 CFR 1.54) will be issued in due course and the date shown on this Acknowledgement Receipt will establish the filing date of the application.

National Stage of an International Application under 35 U.S.C. 371
If a timely submission to enter the national stage of an international application is compliant with the conditions of 35 U.S.C. 371 and other applicable requirements a Form PCT/DO/EO/903 indicating acceptance of the application as a national stage submission under 35 U.S.C. 371 will be issued in addition to the Filing Receipt, in due course.

New International Application Filed with the USPTO as a Receiving Office
If a new international application is being filed and the international application includes the necessary components for an international filing date (see PCT Article 11 and MPEP 1810), a Notification of the International Application Number and of the International Filing Date (Form PCT/RO/105) will be issued in due course, subject to prescriptions concerning national security, and the date shown on this Acknowledgement Receipt will establish the international filing date of the application.

UNITED STATES PATENT AND TRADEMARK OFFICE

UNITED STATES DEPARTMENT OF COMMERCE
United States Patent and Trademark Office
Address: COMMISSIONER FOR PATENTS
P.O. Box 1450
Alexandria, Virginia 22313-1450
www.uspto.gov

APPLICATION NO.	FILING DATE	FIRST NAMED INVENTOR	ATTORNEY DOCKET NO.	CONFIRMATION NO.
10/552,912	02/27/2006	Joel Gaillard	1-37992	6905

43935 7590 11/18/2009
FRASER CLEMENS MARTIN & MILLER LLC
28366 KENSINGTON LANE
PERRYSBURG, OH 43551

EXAMINER
HESS, DANIEL A

ART UNIT	PAPER NUMBER
2876	

NOTIFICATION DATE	DELIVERY MODE
11/18/2009	ELECTRONIC

Please find below and/or attached an Office communication concerning this application or proceeding.

The time period for reply, if any, is set in the attached communication.

Notice of the Office communication was sent electronically on above-indicated "Notification Date" to the following e-mail address(es):

miller@fraser-ip.com
sloan@fraser-ip.com
clemens@fraser-ip.com

PTOL-90A (Rev. 04/07)

UNITED STATES DEPARTMENT OF COMMERCE
U.S. Patent and Trademark Office
Address: COMMISSIONER FOR PATENTS
P.O. Box 1450
Alexandria, Virginia 22313-1450

APPLICATION NO./ CONTROL NO.	FILING DATE	FIRST NAMED INVENTOR / PATENT IN REEXAMINATION	ATTORNEY DOCKET NO.
10552912	2/27/06	GAILLARD, JOEL	1-37992

EXAMINER
DANIEL A. HESS

ART UNIT	PAPER
2876	20091110

FRASER CLEMENS MARTIN & MILLER LLC
28366 KENSINGTON LANE
PERRYSBURG, OH 43551

DATE MAILED:

Please find below and/or attached an Office communication concerning this application or proceeding.

Commissioner for Patents

The issue fee in the above application was paid on 10/22/2009. An IDS was received 10/29/2009. The IDS was entered into the file wrapper but cannot be considered at this time.

In order for this IDS to be considered, the applicant must petition to withdraw allowance and file an RCE in the present case.

/Daniel A Hess/
Primary Examiner, Art Unit 2876

PTO-90C (Rev.04-03)

UNITED STATES PATENT AND TRADEMARK OFFICE

UNITED STATES DEPARTMENT OF COMMERCE
United States Patent and Trademark Office
Address: COMMISSIONER FOR PATENTS
P.O. Box 1450
Alexandria, Virginia 22313-1450
www.uspto.gov

APPLICATION NO.	ISSUE DATE	PATENT NO.	ATTORNEY DOCKET NO.	CONFIRMATION NO.
10/552,912	12/08/2009	7628333	1-37992	6905

43935 7590 11/18/2009
FRASER CLEMENS MARTIN & MILLER LLC
28366 KENSINGTON LANE
PERRYSBURG, OH 43551

ISSUE NOTIFICATION

The projected patent number and issue date are specified above.

Determination of Patent Term Adjustment under 35 U.S.C. 154 (b)
(application filed on or after May 29, 2000)

The Patent Term Adjustment is 780 day(s). Any patent to issue from the above-identified application will include an indication of the adjustment on the front page.

If a Continued Prosecution Application (CPA) was filed in the above-identified application, the filing date that determines Patent Term Adjustment is the filing date of the most recent CPA.

Applicant will be able to obtain more detailed information by accessing the Patent Application Information Retrieval (PAIR) WEB site (http://pair.uspto.gov).

Any questions regarding the Patent Term Extension or Adjustment determination should be directed to the Office of Patent Legal Administration at (571)-272-7702. Questions relating to issue and publication fee payments should be directed to the Application Assistance Unit (AAU) of the Office of Data Management (ODM) at (571)-272-4200.

APPLICANT(s) (Please see PAIR WEB site http://pair.uspto.gov for additional applicants):

Joel Gaillard, Nassau, BAHAMAS;

CERTIFICATE OF ELECTRONIC TRANSMITTAL UNDER 37 CFR 1.8

I hereby certify that this correspondence is being electronically transmitted to the Commissioner For Patents on the date set forth below,

Sarah Secco
(signature)
Date of signature and deposit - 10/29/09

IN THE UNITED STATES PATENT AND TRADEMARK OFFICE

In re Application of: Joel Gaillard	)	Group Art Unit: 2876
Serial No.: 10/552,912	)	Examiner: Daniel A. Hess
Filed: October 13, 2005	)	Attorney Docket: 1-37992
For: PORTABLE ELECTRONIC DEVICE CAPABLE OF ALTERNATE DATA CONVEYANCE OPERATIONS RESPONSIVE TO AN INVARIABLE ACTIVATION COMMAND	)	

October 29, 2009

Commissioner for Patents
P.O. Box 1450
Alexandria, VA 22313-1450

SUPPLEMENTAL INFORMATION DISCLOSURE STATEMENT

Honorable Sir:

Pursuant to Sections 1.97 and 1.98 of Title 37 of the Code of Federal Regulations, record is hereby made of published prior art. No representation is made or intended that a prior art search was conducted, or that no better art than that listed is available.

No item of information contained herein was cited in a communication from a foreign patent office in a counterpart foreign application, and, to the knowledge of the person signing the

certification after making reasonable inquiry, no item of information contained herein was known to any individual designated in § 1.56(c) more than three months prior to the filing of the information disclosure statement.

U.S. Patent Documents - No., Date, Name

U.S. Pat. No. 7,024,385 Issue Date: April 4, 2006 Adcock et al.

Form PTO/SB/08a (previously PTO-1449) is enclosed herewith. The Commissioner is hereby authorized to charge any necessary fees as set forth in 37 C.F.R. § 1.17(p) to Deposit Account No. 50-3156.

Respectfully Submitted,

Donald R. Fraser
Reg. No. 17,919

Fraser Clemens Martin & Miller LLC
28366 Kensington Lane
Perrysburg, Ohio 43551
(419) 874-1100

PTO/SB/08a (07-09)
Approved for use through 07/31/2012. OMB 0651-0031
U.S. Patent and Trademark Office; U.S. DEPARTMENT OF COMMERCE
Under the Paperwork Reduction Act of 1995, no persons are required to respond to a collection of information unless it contains a valid OMB control number.

Substitute for form 1449/PTO

INFORMATION DISCLOSURE STATEMENT BY APPLICANT

(Use as many sheets as necessary)

Sheet 1 of 1

Complete if Known	
Application Number	10/552,912
Filing Date	October 13, 2005
First Named Inventor	Joel Gaillard
Art Unit	2876
Examiner Name	Daniel A. Hess
Attorney Docket Number	1-37992

U. S. PATENT DOCUMENTS

Examiner Initials*	Cite No.[1]	Document Number Number-Kind Code[2] (if known)	Publication Date MM-DD-YYYY	Name of Patentee or Applicant of Cited Document	Pages, Columns, Lines, Where Relevant Passages or Relevant Figures Appear
		US- 7,024,385	04/04/2006	Adcock et al.	
		US-			
		US-			
		US-			
		US-			
		US-			
		US-			
		US-			
		US-			
		US-			
		US-			
		US-			
		US-			
		US-			
		US-			
		US-			
		US-			
		US-			
		US-			

FOREIGN PATENT DOCUMENTS

Examiner Initials*	Cite No.[1]	Foreign Patent Document Country Code[3] Number[4] Kind Code[5] (if known)	Publication Date MM-DD-YYYY	Name of Patentee or Applicant of Cited Document	Pages, Columns, Lines, Where Relevant Passages Or Relevant Figures Appear	T[6]

Examiner Signature		Date Considered	

*EXAMINER: Initial if reference considered, whether or not citation is in conformance with MPEP 609. Draw line through citation if not in conformance and not considered. Include copy of this form with next communication to applicant. [1] Applicant's unique citation designation number (optional). [2] See Kinds Codes of USPTO Patent Documents at www.uspto.gov or MPEP 901.04. [3] Enter Office that issued the document, by the two-letter code (WIPO Standard ST.3). [4] For Japanese patent documents, the indication of the year of the reign of the Emperor must precede the serial number of the patent document. [5] Kind of document by the appropriate symbols as indicated on the document under WIPO Standard ST.16 if possible. [6] Applicant is to place a check mark here if English language Translation is attached.

This collection of information is required by 37 CFR 1.97 and 1.98. The information is required to obtain or retain a benefit by the public which is to file (and by the USPTO to process) an application. Confidentiality is governed by 35 U.S.C. 122 and 37 CFR 1.14. This collection is estimated to take 2 hours to complete, including gathering, preparing, and submitting the completed application form to the USPTO. Time will vary depending upon the individual case. Any comments on the amount of time you require to complete this form and/or suggestions for reducing this burden, should be sent to the Chief Information Officer, U.S. Patent and Trademark Office, P.O. Box 1450, Alexandria, VA 22313-1450. DO NOT SEND FEES OR COMPLETED FORMS TO THIS ADDRESS. SEND TO: **Commissioner for Patents, P.O. Box 1450, Alexandria, VA 22313-1450.**

If you need assistance in completing the form, call 1-800-PTO-9199 (1-800-786-9199) and select option 2.

Electronic Acknowledgement Receipt

EFS ID:	6356304
Application Number:	10552912
International Application Number:	
Confirmation Number:	6905
Title of Invention:	PORTABLE ELECTRONIC DEVICE CAPABLE OF ALTERNATE DATA CONVEYANCE OPERATIONS RESPONSIVE TO AN INVARIABLE ACTIVATION COMMAND
First Named Inventor/Applicant Name:	Joel Gaillard
Customer Number:	43935
Filer:	Donald R. Fraser/Sarah Tecco
Filer Authorized By:	Donald R. Fraser
Attorney Docket Number:	1-37992
Receipt Date:	29-OCT-2009
Filing Date:	27-FEB-2006
Time Stamp:	15:15:09
Application Type:	U.S. National Stage under 35 USC 371

Payment information:

Submitted with Payment	no

File Listing:

Document Number	Document Description	File Name	File Size(Bytes)/ Message Digest	Multi Part /.zip	Pages (if appl.)
1	Information Disclosure Statement (IDS) Filed (SB/08)	37992_Supp_IDS_FILED_10-29-09.pdf	142593 f8a4559cf8b21acf29eeb0b22334c6a3393c98e2	no	3

Warnings:

Information:

This is not an USPTO supplied IDS fillable form	
Total Files Size (in bytes):	142593

This Acknowledgement Receipt evidences receipt on the noted date by the USPTO of the indicated documents, characterized by the applicant, and including page counts, where applicable. It serves as evidence of receipt similar to a Post Card, as described in MPEP 503.

New Applications Under 35 U.S.C. 111
If a new application is being filed and the application includes the necessary components for a filing date (see 37 CFR 1.53(b)-(d) and MPEP 506), a Filing Receipt (37 CFR 1.54) will be issued in due course and the date shown on this Acknowledgement Receipt will establish the filing date of the application.

National Stage of an International Application under 35 U.S.C. 371
If a timely submission to enter the national stage of an international application is compliant with the conditions of 35 U.S.C. 371 and other applicable requirements a Form PCT/DO/EO/903 indicating acceptance of the application as a national stage submission under 35 U.S.C. 371 will be issued in addition to the Filing Receipt, in due course.

New International Application Filed with the USPTO as a Receiving Office
If a new international application is being filed and the international application includes the necessary components for an international filing date (see PCT Article 11 and MPEP 1810), a Notification of the International Application Number and of the International Filing Date (Form PCT/RO/105) will be issued in due course, subject to prescriptions concerning national security, and the date shown on this Acknowledgement Receipt will establish the international filing date of the application.

OIPE IAP88 OCT 22 2009 PATENT & TRADEMARK OFFICE

PART B - FEE(S) TRANSMITTAL

Complete and send this form, together with applicable fee(s), to: Mail **Mail Stop ISSUE FEE**
Commissioner for Patents
P.O. Box 1450
Alexandria, Virginia 22313-1450
or Fax (571)-273-2885

INSTRUCTIONS: This form should be used for transmitting the ISSUE FEE and PUBLICATION FEE (if required). Blocks 1 through 5 should be completed where appropriate. All further correspondence including the Patent, advance orders and notification of maintenance fees will be mailed to the current correspondence address as indicated unless corrected below or directed otherwise in Block 1, by (a) specifying a new correspondence address; and/or (b) indicating a separate "FEE ADDRESS" for maintenance fee notifications.

CURRENT CORRESPONDENCE ADDRESS (Note: Use Block 1 for any change of address)

43935 7590 07/21/2009

FRASER CLEMENS MARTIN & MILLER LLC
28366 KENSINGTON LANE
PERRYSBURG, OH 43551

10/22/2009 RMEBRAH1 00000067 503156 10552912

01 FC:2501 755.00 DA
02 FC:1504 300.00 DA

Note: A certificate of mailing can only be used for domestic mailings of the Fee(s) Transmittal. This certificate cannot be used for any other accompanying papers. Each additional paper, such as an assignment or formal drawing, must have its own certificate of mailing or transmission.

Certificate of Mailing or Transmission
I hereby certify that this Fee(s) Transmittal is being deposited with the United States Postal Service with sufficient postage for first class mail in an envelope addressed to the Mail Stop ISSUE FEE address above, or being facsimile transmitted to the USPTO (571) 273-2885, on the date indicated below.

Bev Ellerbrock (Depositor's name)
Bev Ellerbrock (Signature)
October 20, 2009 (Date)

APPLICATION NO.	FILING DATE	FIRST NAMED INVENTOR	ATTORNEY DOCKET NO.	CONFIRMATION NO.
10/552,912	02/27/2006	Joel Gaillard	1-37992	6905

TITLE OF INVENTION: PORTABLE ELECTRONIC DEVICE CAPABLE OF ALTERNATE DATA CONVEYANCE OPERATIONS RESPONSIVE TO AN INVARIABLE ACTIVATION COMMAND

APPLN. TYPE	SMALL ENTITY	ISSUE FEE DUE	PUBLICATION FEE DUE	PREV. PAID ISSUE FEE	TOTAL FEE(S) DUE	DATE DUE
nonprovisional	YES	$755	$300	$0	$1055	10/21/2009

EXAMINER	ART UNIT	CLASS-SUBCLASS
HESS, DANIEL A	2876	235-492000

1. Change of correspondence address or indication of "Fee Address" (37 CFR 1.363).
☐ Change of correspondence address (or Change of Correspondence Address form PTO/SB/122) attached.
☐ "Fee Address" indication (or "Fee Address" Indication form PTO/SB/47; Rev 03-02 or more recent) attached. **Use of a Customer Number is required.**

2. For printing on the patent front page, list
(1) the names of up to 3 registered patent attorneys or agents OR, alternatively,
(2) the name of a single firm (having as a member a registered attorney or agent) and the names of up to 2 registered patent attorneys or agents. If no name is listed, no name will be printed.

1 Fraser Clemens
2 Martin & Miller LLC
3 Donald R. Fraser

3. ASSIGNEE NAME AND RESIDENCE DATA TO BE PRINTED ON THE PATENT (print or type)

PLEASE NOTE: Unless an assignee is identified below, no assignee data will appear on the patent. If an assignee is identified below, the document has been filed for recordation as set forth in 37 CFR 3.11. Completion of this form is NOT a substitute for filing an assignment.

(A) NAME OF ASSIGNEE: G. Holdings Ltd.
(B) RESIDENCE: (CITY and STATE OR COUNTRY): Nassau NP, Bahamas

Please check the appropriate assignee category or categories (will not be printed on the patent): ☐ Individual ☒ Corporation or other private group entity ☐ Government

4a. The following fee(s) are submitted:
☒ Issue Fee
☒ Publication Fee (No small entity discount permitted)
☐ Advance Order - # of Copies _____

4b. Payment of Fee(s): **(Please first reapply any previously paid issue fee shown above)**
☐ A check is enclosed.
☐ Payment by credit card. Form PTO-2038 is attached.
☒ The Director is hereby authorized to charge the required fee(s), any deficiency, or credit any overpayment, to Deposit Account Number 50-3156 (enclose an extra copy of this form).

5. **Change in Entity Status** (from status indicated above)
☐ a. Applicant claims SMALL ENTITY status. See 37 CFR 1.27.
☐ b. Applicant is no longer claiming SMALL ENTITY status. See 37 CFR 1.27(g)(2).

NOTE: The Issue Fee and Publication Fee (if required) will not be accepted from anyone other than the applicant; a registered attorney or agent; or the assignee or other party in interest as shown by the records of the United States Patent and Trademark Office.

Authorized Signature D. R. Fraser
Date October 20, 2009
Typed or printed name Donald R. Fraser
Registration No. 17,919

This collection of information is required by 37 CFR 1.311. The information is required to obtain or retain a benefit by the public which is to file (and by the USPTO to process) an application. Confidentiality is governed by 35 U.S.C. 122 and 37 CFR 1.14. This collection is estimated to take 12 minutes to complete, including gathering, preparing, and submitting the completed application form to the USPTO. Time will vary depending upon the individual case. Any comments on the amount of time you require to complete this form and/or suggestions for reducing this burden, should be sent to the Chief Information Officer, U.S. Patent and Trademark Office, U.S. Department of Commerce, P.O. Box 1450, Alexandria, Virginia 22313-1450. DO NOT SEND FEES OR COMPLETED FORMS TO THIS ADDRESS. SEND TO: Commissioner for Patents, P.O. Box 1450, Alexandria, Virginia 22313-1450.
Under the Paperwork Reduction Act of 1995, no persons are required to respond to a collection of information unless it displays a valid OMB control number.

OIPE IAP88
OCT 22 2009
PATENT & TRADEMARK OFFICE

PART B - FEE(S) TRANSMITTAL

Complete and send this form, together with applicable fee(s), to: Mail **Mail Stop ISSUE FEE**
Commissioner for Patents
P.O. Box 1450
Alexandria, Virginia 22313-1450
or Fax (571)-273-2885

INSTRUCTIONS: This form should be used for transmitting the ISSUE FEE and PUBLICATION FEE (if required). Blocks 1 through 5 should be completed where appropriate. All further correspondence including the Patent, advance orders and notification of maintenance fees will be mailed to the current correspondence address as indicated unless corrected below or directed otherwise in Block 1, by (a) specifying a new correspondence address; and/or (b) indicating a separate "FEE ADDRESS" for maintenance fee notifications.

CURRENT CORRESPONDENCE ADDRESS (Note: Use Block 1 for any change of address)

43935 7590 07/21/2009

FRASER CLEMENS MARTIN & MILLER LLC
28366 KENSINGTON LANE
PERRYSBURG, OH 43551

Note: A certificate of mailing can only be used for domestic mailings of the Fee(s) Transmittal. This certificate cannot be used for any other accompanying papers. Each additional paper, such as an assignment or formal drawing, must have its own certificate of mailing or transmission.

Certificate of Mailing or Transmission
I hereby certify that this Fee(s) Transmittal is being deposited with the United States Postal Service with sufficient postage for first class mail in an envelope addressed to the Mail Stop ISSUE FEE address above, or being facsimile transmitted to the USPTO (571) 273-2885, on the date indicated below.

Bev Ellerbrock (Depositor's name)
Bev Ellerbrock (Signature)
October 20, 2009 (Date)

APPLICATION NO.	FILING DATE	FIRST NAMED INVENTOR	ATTORNEY DOCKET NO.	CONFIRMATION NO.
10/552,912	02/27/2006	Joel Gaillard	1-37992	6905

TITLE OF INVENTION: PORTABLE ELECTRONIC DEVICE CAPABLE OF ALTERNATE DATA CONVEYANCE OPERATIONS RESPONSIVE TO AN INVARIABLE ACTIVATION COMMAND

APPLN. TYPE	SMALL ENTITY	ISSUE FEE DUE	PUBLICATION FEE DUE	PREV. PAID ISSUE FEE	TOTAL FEE(S) DUE	DATE DUE
nonprovisional	YES	$755	$300	$0	$1055	10/21/2009

EXAMINER	ART UNIT	CLASS-SUBCLASS
HESS, DANIEL A	2876	235-492000

1. Change of correspondence address or indication of "Fee Address" (37 CFR 1.363).
☐ Change of correspondence address (or Change of Correspondence Address form PTO/SB/122) attached.
☐ "Fee Address" indication (or "Fee Address" Indication form PTO/SB/47; Rev 03-02 or more recent) attached. **Use of a Customer Number is required.**

2. For printing on the patent front page, list
(1) the names of up to 3 registered patent attorneys or agents OR, alternatively,
(2) the name of a single firm (having as a member a registered attorney or agent) and the names of up to 2 registered patent attorneys or agents. If no name is listed, no name will be printed.

1 Fraser Clemens
2 Martin & Miller LLC
3 Donald R. Fraser

3. ASSIGNEE NAME AND RESIDENCE DATA TO BE PRINTED ON THE PATENT (print or type)

PLEASE NOTE: Unless an assignee is identified below, no assignee data will appear on the patent. If an assignee is identified below, the document has been filed for recordation as set forth in 37 CFR 3.11. Completion of this form is NOT a substitute for filing an assignment.

(A) NAME OF ASSIGNEE: G. Holdings Ltd.
(B) RESIDENCE: (CITY and STATE OR COUNTRY): Nassau NP, Bahamas

Please check the appropriate assignee category or categories (will not be printed on the patent): ☐ Individual ☒ Corporation or other private group entity ☐ Government

4a. The following fee(s) are submitted:
☒ Issue Fee
☒ Publication Fee (No small entity discount permitted)
☐ Advance Order - # of Copies _____

4b. Payment of Fee(s): **(Please first reapply any previously paid issue fee shown above)**
☐ A check is enclosed.
☐ Payment by credit card. Form PTO-2038 is attached.
☒ The Director is hereby authorized to charge the required fee(s), any deficiency, or credit any overpayment, to Deposit Account Number 50-3156 (enclose an extra copy of this form).

5. **Change in Entity Status** (from status indicated above)
☐ a. Applicant claims SMALL ENTITY status. See 37 CFR 1.27.
☐ b. Applicant is no longer claiming SMALL ENTITY status. See 37 CFR 1.27(g)(2).

NOTE: The Issue Fee and Publication Fee (if required) will not be accepted from anyone other than the applicant; a registered attorney or agent; or the assignee or other party in interest as shown by the records of the United States Patent and Trademark Office.

Authorized Signature Donald R. Fraser Date October 20, 2009

Typed or printed name Donald R. Fraser Registration No. 17,919

This collection of information is required by 37 CFR 1.311. The information is required to obtain or retain a benefit by the public which is to file (and by the USPTO to process) an application. Confidentiality is governed by 35 U.S.C. 122 and 37 CFR 1.14. This collection is estimated to take 12 minutes to complete, including gathering, preparing, and submitting the completed application form to the USPTO. Time will vary depending upon the individual case. Any comments on the amount of time you require to complete this form and/or suggestions for reducing this burden, should be sent to the Chief Information Officer, U.S. Patent and Trademark Office, U.S. Department of Commerce, P.O. Box 1450, Alexandria, Virginia 22313-1450. DO NOT SEND FEES OR COMPLETED FORMS TO THIS ADDRESS. SEND TO: Commissioner for Patents, P.O. Box 1450, Alexandria, Virginia 22313-1450.

Under the Paperwork Reduction Act of 1995, no persons are required to respond to a collection of information unless it displays a valid OMB control number.

UNITED STATES PATENT AND TRADEMARK OFFICE

UNITED STATES DEPARTMENT OF COMMERCE
United States Patent and Trademark Office
Address: COMMISSIONER FOR PATENTS
P.O. Box 1450
Alexandria, Virginia 22313-1450
www.uspto.gov

NOTICE OF ALLOWANCE AND FEE(S) DUE

43935 7590 07/21/2009

FRASER CLEMENS MARTIN & MILLER LLC
28366 KENSINGTON LANE
PERRYSBURG, OH 43551

EXAMINER	
HESS, DANIEL A	
ART UNIT	PAPER NUMBER
2876	

DATE MAILED: 07/21/2009

APPLICATION NO.	FILING DATE	FIRST NAMED INVENTOR	ATTORNEY DOCKET NO.	CONFIRMATION NO.
10/552,912	02/27/2006	Joel Gaillard	1-37992	6905

TITLE OF INVENTION: PORTABLE ELECTRONIC DEVICE CAPABLE OF ALTERNATE DATA CONVEYANCE OPERATIONS RESPONSIVE TO AN INVARIABLE ACTIVATION COMMAND

APPLN. TYPE	SMALL ENTITY	ISSUE FEE DUE	PUBLICATION FEE DUE	PREV. PAID ISSUE FEE	TOTAL FEE(S) DUE	DATE DUE
nonprovisional	YES	$755	$300	$0	$1055	10/21/2009

THE APPLICATION IDENTIFIED ABOVE HAS BEEN EXAMINED AND IS ALLOWED FOR ISSUANCE AS A PATENT. PROSECUTION ON THE MERITS IS CLOSED. THIS NOTICE OF ALLOWANCE IS NOT A GRANT OF PATENT RIGHTS. THIS APPLICATION IS SUBJECT TO WITHDRAWAL FROM ISSUE AT THE INITIATIVE OF THE OFFICE OR UPON PETITION BY THE APPLICANT. SEE 37 CFR 1.313 AND MPEP 1308.

THE ISSUE FEE AND PUBLICATION FEE (IF REQUIRED) MUST BE PAID WITHIN THREE MONTHS FROM THE MAILING DATE OF THIS NOTICE OR THIS APPLICATION SHALL BE REGARDED AS ABANDONED. THIS STATUTORY PERIOD CANNOT BE EXTENDED. SEE 35 U.S.C. 151. THE ISSUE FEE DUE INDICATED ABOVE DOES NOT REFLECT A CREDIT FOR ANY PREVIOUSLY PAID ISSUE FEE IN THIS APPLICATION. IF AN ISSUE FEE HAS PREVIOUSLY BEEN PAID IN THIS APPLICATION (AS SHOWN ABOVE), THE RETURN OF PART B OF THIS FORM WILL BE CONSIDERED A REQUEST TO REAPPLY THE PREVIOUSLY PAID ISSUE FEE TOWARD THE ISSUE FEE NOW DUE.

HOW TO REPLY TO THIS NOTICE:

I. Review the SMALL ENTITY status shown above.

If the SMALL ENTITY is shown as YES, verify your current SMALL ENTITY status:

A. If the status is the same, pay the TOTAL FEE(S) DUE shown above.

B. If the status above is to be removed, check box 5b on Part B - Fee(s) Transmittal and pay the PUBLICATION FEE (if required) and twice the amount of the ISSUE FEE shown above, or

If the SMALL ENTITY is shown as NO:

A. Pay TOTAL FEE(S) DUE shown above, or

B. If applicant claimed SMALL ENTITY status before, or is now claiming SMALL ENTITY status, check box 5a on Part B - Fee(s) Transmittal and pay the PUBLICATION FEE (if required) and 1/2 the ISSUE FEE shown above.

II. PART B - FEE(S) TRANSMITTAL, or its equivalent, must be completed and returned to the United States Patent and Trademark Office (USPTO) with your ISSUE FEE and PUBLICATION FEE (if required). If you are charging the fee(s) to your deposit account, section "4b" of Part B - Fee(s) Transmittal should be completed and an extra copy of the form should be submitted. If an equivalent of Part B is filed, a request to reapply a previously paid issue fee must be clearly made, and delays in processing may occur due to the difficulty in recognizing the paper as an equivalent of Part B.

III. All communications regarding this application must give the application number. Please direct all communications prior to issuance to Mail Stop ISSUE FEE unless advised to the contrary.

IMPORTANT REMINDER: Utility patents issuing on applications filed on or after Dec. 12, 1980 may require payment of maintenance fees. It is patentee's responsibility to ensure timely payment of maintenance fees when due.

PTOL-85 (Rev. 08/07) Approved for use through 08/31/2010.

PART B - FEE(S) TRANSMITTAL

Complete and send this form, together with applicable fee(s), to: Mail **Mail Stop ISSUE FEE**
Commissioner for Patents
P.O. Box 1450
Alexandria, Virginia 22313-1450
or Fax (571)-273-2885

INSTRUCTIONS: This form should be used for transmitting the ISSUE FEE and PUBLICATION FEE (if required). Blocks 1 through 5 should be completed where appropriate. All further correspondence including the Patent, advance orders and notification of maintenance fees will be mailed to the current correspondence address as indicated unless corrected below or directed otherwise in Block 1, by (a) specifying a new correspondence address; and/or (b) indicating a separate "FEE ADDRESS" for maintenance fee notifications.

CURRENT CORRESPONDENCE ADDRESS (Note: Use Block 1 for any change of address)

43935 7590 07/21/2009

FRASER CLEMENS MARTIN & MILLER LLC
28366 KENSINGTON LANE
PERRYSBURG, OH 43551

Note: A certificate of mailing can only be used for domestic mailings of the Fee(s) Transmittal. This certificate cannot be used for any other accompanying papers. Each additional paper, such as an assignment or formal drawing, must have its own certificate of mailing or transmission.

Certificate of Mailing or Transmission

I hereby certify that this Fee(s) Transmittal is being deposited with the United States Postal Service with sufficient postage for first class mail in an envelope addressed to the Mail Stop ISSUE FEE address above, or being facsimile transmitted to the USPTO (571) 273-2885, on the date indicated below.

(Depositor's name)

(Signature)

(Date)

APPLICATION NO.	FILING DATE	FIRST NAMED INVENTOR	ATTORNEY DOCKET NO.	CONFIRMATION NO.
10/552,912	02/27/2006	Joel Gaillard	1-37992	6905

TITLE OF INVENTION: PORTABLE ELECTRONIC DEVICE CAPABLE OF ALTERNATE DATA CONVEYANCE OPERATIONS RESPONSIVE TO AN INVARIABLE ACTIVATION COMMAND

APPLN. TYPE	SMALL ENTITY	ISSUE FEE DUE	PUBLICATION FEE DUE	PREV. PAID ISSUE FEE	TOTAL FEE(S) DUE	DATE DUE
nonprovisional	YES	$755	$300	$0	$1055	10/21/2009

EXAMINER	ART UNIT	CLASS-SUBCLASS
HESS, DANIEL A	2876	235-492000

1. Change of correspondence address or indication of "Fee Address" (37 CFR 1.363).

❑ Change of correspondence address (or Change of Correspondence Address form PTO/SB/122) attached.

❑ "Fee Address" indication (or "Fee Address" Indication form PTO/SB/47; Rev 03-02 or more recent) attached. **Use of a Customer Number is required.**

2. For printing on the patent front page, list

(1) the names of up to 3 registered patent attorneys or agents OR, alternatively,

(2) the name of a single firm (having as a member a registered attorney or agent) and the names of up to 2 registered patent attorneys or agents. If no name is listed, no name will be printed.

1_____

2_____

3_____

3. ASSIGNEE NAME AND RESIDENCE DATA TO BE PRINTED ON THE PATENT (print or type)

PLEASE NOTE: Unless an assignee is identified below, no assignee data will appear on the patent. If an assignee is identified below, the document has been filed for recordation as set forth in 37 CFR 3.11. Completion of this form is NOT a substitute for filing an assignment.

(A) NAME OF ASSIGNEE (B) RESIDENCE: (CITY and STATE OR COUNTRY)

Please check the appropriate assignee category or categories (will not be printed on the patent) : ❑ Individual ❑ Corporation or other private group entity ❑ Government

4a. The following fee(s) are submitted:

❑ Issue Fee

❑ Publication Fee (No small entity discount permitted)

❑ Advance Order - # of Copies _____

4b. Payment of Fee(s): **(Please first reapply any previously paid issue fee shown above)**

❑ A check is enclosed.

❑ Payment by credit card. Form PTO-2038 is attached.

❑ The Director is hereby authorized to charge the required fee(s), any deficiency, or credit any overpayment, to Deposit Account Number _____ (enclose an extra copy of this form).

5. **Change in Entity Status** (from status indicated above)

❑ a. Applicant claims SMALL ENTITY status. See 37 CFR 1.27.

❑ b. Applicant is no longer claiming SMALL ENTITY status. See 37 CFR 1.27(g)(2).

NOTE: The Issue Fee and Publication Fee (if required) will not be accepted from anyone other than the applicant; a registered attorney or agent; or the assignee or other party in interest as shown by the records of the United States Patent and Trademark Office.

Authorized Signature _____ Date _____

Typed or printed name _____ Registration No. _____

This collection of information is required by 37 CFR 1.311. The information is required to obtain or retain a benefit by the public which is to file (and by the USPTO to process) an application. Confidentiality is governed by 35 U.S.C. 122 and 37 CFR 1.14. This collection is estimated to take 12 minutes to complete, including gathering, preparing, and submitting the completed application form to the USPTO. Time will vary depending upon the individual case. Any comments on the amount of time you require to complete this form and/or suggestions for reducing this burden, should be sent to the Chief Information Officer, U.S. Patent and Trademark Office, U.S. Department of Commerce, P.O. Box 1450, Alexandria, Virginia 22313-1450. DO NOT SEND FEES OR COMPLETED FORMS TO THIS ADDRESS. SEND TO: Commissioner for Patents, P.O. Box 1450, Alexandria, Virginia 22313-1450.

Under the Paperwork Reduction Act of 1995, no persons are required to respond to a collection of information unless it displays a valid OMB control number.

UNITED STATES PATENT AND TRADEMARK OFFICE

UNITED STATES DEPARTMENT OF COMMERCE
United States Patent and Trademark Office
Address: COMMISSIONER FOR PATENTS
P.O. Box 1450
Alexandria, Virginia 22313-1450
www.uspto.gov

APPLICATION NO.	FILING DATE	FIRST NAMED INVENTOR	ATTORNEY DOCKET NO.	CONFIRMATION NO.
10/552,912	02/27/2006	Joel Gaillard	1-37992	6905

43935 7590 07/21/2009

FRASER CLEMENS MARTIN & MILLER LLC
28366 KENSINGTON LANE
PERRYSBURG, OH 43551

EXAMINER
HESS, DANIEL A

ART UNIT	PAPER NUMBER
2876	

DATE MAILED: 07/21/2009

Determination of Patent Term Adjustment under 35 U.S.C. 154 (b)
(application filed on or after May 29, 2000)

The Patent Term Adjustment to date is 781 day(s). If the issue fee is paid on the date that is three months after the mailing date of this notice and the patent issues on the Tuesday before the date that is 28 weeks (six and a half months) after the mailing date of this notice, the Patent Term Adjustment will be 781 day(s).

If a Continued Prosecution Application (CPA) was filed in the above-identified application, the filing date that determines Patent Term Adjustment is the filing date of the most recent CPA.

Applicant will be able to obtain more detailed information by accessing the Patent Application Information Retrieval (PAIR) WEB site (http://pair.uspto.gov).

Any questions regarding the Patent Term Extension or Adjustment determination should be directed to the Office of Patent Legal Administration at (571)-272-7702. Questions relating to issue and publication fee payments should be directed to the Customer Service Center of the Office of Patent Publication at 1-(888)-786-0101 or (571)-272-4200.

PTOL-85 (Rev. 08/07) Approved for use through 08/31/2010.

Notice of Allowability	Application No.	Applicant(s)	
	10/552,912	GAILLARD, JOEL	
	Examiner	Art Unit	
	DANIEL A. HESS	2876	

-- The MAILING DATE of this communication appears on the cover sheet with the correspondence address--

All claims being allowable, PROSECUTION ON THE MERITS IS (OR REMAINS) CLOSED in this application. If not included herewith (or previously mailed), a Notice of Allowance (PTOL-85) or other appropriate communication will be mailed in due course. **THIS NOTICE OF ALLOWABILITY IS NOT A GRANT OF PATENT RIGHTS.** This application is subject to withdrawal from issue at the initiative of the Office or upon petition by the applicant. See 37 CFR 1.313 and MPEP 1308.

1. ☒ This communication is responsive to *interview of 7/10/2009*.

2. ☒ The allowed claim(s) is/are *1-3, 5-11 and 13-15*.

3. ☐ Acknowledgment is made of a claim for foreign priority under 35 U.S.C. § 119(a)-(d) or (f).
   a) ☐ All b) ☐ Some* c) ☐ None of the:
      1. ☐ Certified copies of the priority documents have been received.
      2. ☐ Certified copies of the priority documents have been received in Application No. _____ .
      3. ☐ Copies of the certified copies of the priority documents have been received in this national stage application from the International Bureau (PCT Rule 17.2(a)).

   * Certified copies not received: _____.

Applicant has THREE MONTHS FROM THE "MAILING DATE" of this communication to file a reply complying with the requirements noted below. Failure to timely comply will result in ABANDONMENT of this application.
THIS THREE-MONTH PERIOD IS NOT EXTENDABLE.

4. ☐ A SUBSTITUTE OATH OR DECLARATION must be submitted. Note the attached EXAMINER'S AMENDMENT or NOTICE OF INFORMAL PATENT APPLICATION (PTO-152) which gives reason(s) why the oath or declaration is deficient.

5. ☐ CORRECTED DRAWINGS (as "replacement sheets") must be submitted.
   (a) ☐ including changes required by the Notice of Draftsperson's Patent Drawing Review (PTO-948) attached
      1) ☐ hereto or 2) ☐ to Paper No./Mail Date _____.
   (b) ☐ including changes required by the attached Examiner's Amendment / Comment or in the Office action of Paper No./Mail Date _____.

   Identifying indicia such as the application number (see 37 CFR 1.84(c)) should be written on the drawings in the front (not the back) of each sheet. Replacement sheet(s) should be labeled as such in the header according to 37 CFR 1.121(d).

6. ☐ DEPOSIT OF and/or INFORMATION about the deposit of BIOLOGICAL MATERIAL must be submitted. Note the attached Examiner's comment regarding REQUIREMENT FOR THE DEPOSIT OF BIOLOGICAL MATERIAL.

Attachment(s)

1. ☐ Notice of References Cited (PTO-892)
2. ☐ Notice of Draftperson's Patent Drawing Review (PTO-948)
3. ☐ Information Disclosure Statements (PTO/SB/08), Paper No./Mail Date _____
4. ☐ Examiner's Comment Regarding Requirement for Deposit of Biological Material
5. ☐ Notice of Informal Patent Application
6. ☐ Interview Summary (PTO-413), Paper No./Mail Date _____ .
7. ☒ Examiner's Amendment/Comment
8. ☒ Examiner's Statement of Reasons for Allowance
9. ☐ Other _____.

DETAILED ACTION

This action is responsive to interview conducted with applicant on 7/10/2009, which has been entered into the electronic file of record.

EXAMINER'S AMENDMENT

An examiner's amendment to the record appears below. Should the changes and/or additions be unacceptable to applicant, an amendment may be filed as provided by 37 CFR 1.312. To ensure consideration of such an amendment, it MUST be submitted no later than the payment of the issue fee.

Authorization for this examiner's amendment was given in a telephone interview with Mike Dockins on 7/10/2009.

IN THE CLAIMS:

1. (Currently Amended) A portable electronic device, comprising:

an electronic circuit capable of storing data therein, capable of processing data, and capable of data input and output;

a control device operatively linked to said electronic circuit, with an invariable activation command being issued when said control device is selectively triggered;

a user interface device operatively linked to said electronic circuit;

a data transceiver operatively linked to said electronic circuit[[;]], said data transceiver being for exchanging data between said electronic circuit and an external data exchange device, and for ~~a cue receiver for~~ receiving a selectively emitted activation cue from a source external to said portable electronic device;

a data conveyance switching element operatively linked to said electronic circuit, said

switching element being in an activated state upon an activation cue having been received by said ~~cue receiver~~ data transceiver, and being in an inactive state when no activation cue was received by said ~~cue receiver~~ data transceiver; and

power means for providing power to said portable electronic device;

wherein upon said control device being selectively triggered to issue and invariable activation command:

if said switching element is in said activated state, a data exchange will be initiated through the instrumentality of said data transceiver for exchanging data between said electronic circuit and an external data exchange device;

if said switching element is in said inactive state, data will be conveyed from said electronic circuit to said user interface device for communicating information to the portable electronic device holder.

2. (Original) A portable electronic device as defined in claim 1, wherein said user interface device is a display screen.

3. (Currently Amended) A portable electronic device as defined in claim 1, wherein said data transceiver comprises a data transmitter, ~~and~~ a data receiver distinct from said data transmitter, and a cue receiver distinct from said data receiver.

4. (Cancelled)

5. (Original) A portable electronic device as defined in claim 1, wherein said control device is a biometric parameter detector.

6. (Original) A portable electronic device as defined in claim 5, wherein said biometric parameter detector is a fingerprint scanner capable of obtaining a fingerprint scan, and whereby said control device is triggered when the fingerprint scan matches a fingerprint image pre-saved in said electronic circuit.

7. (Original) A portable electronic device as defined in claim 1,wherein said control device is a manually activated button, and whereby said control device is triggered when the button is pressed.

8. (Original) A portable electronic device as defined in claim 1, wherein said electronic circuit comprises said switching element.

9. (Original) A portable electronic device as defined in claim 8, wherein said electronic circuit comprises a microchip, and wherein said switching element is a series of instructions programmed onto said microchip.

10. (Currently Amended) A portable electronic device as defined in claim 1, wherein said switching element comprises a ~~decisional~~ logical circuit.

11. (Currently Amended) A data exchange system comprising:

a data exchange device comprising a first electronic circuit, a first data transceiver and a cue emitter; and

a portable electronic device, comprising:

a second electronic circuit capable of storing data therein, capable of processing data, and capable of data input and output;

a control device operatively linked to said <u>second</u> electronic circuit, with an invariable activation command being issued when said control device is <u>selectively</u> triggered;

a user interface device operatively linked to said <u>second</u> electronic circuit;

a second data transceiver operatively linked to said <u>second</u> electronic circuit;

a data conveyance switching element operatively linked to said <u>second</u> electronic circuit, and switching element being in an activated state upon an activation cue having been received by said ~~cue receiver~~ <u>second data transceiver</u>, and being in an inactive state when no activation cue was received by said ~~cue receiver~~ <u>second data transceiver;</u> and

power means for providing power to said portable electronic device;

wherein upon said control device being selectively triggered to issue said invariable

activation command:

if said switching element is in its activated state, a data exchange will occur between said first data transceiver and said second data transceiver, thereby exchanging data between said data exchange device and said portable electronic device;

if said switching element is in its inactive state, data is forwarded to said user interface device for communicating information to the portable electronic device holder.

12. (Cancelled)

13. (Original) A method for data exchange with a portable electronic device of the type comprising; an electronic circuit capable of storing data therein, capable of processing data, and capable of data input and output, a control device operatively linked to said circuit, a user interface device operatively linked to said circuit, communication ports operatively linked to said circuit, a switching element operatively linked to said electronic circuit and being in a default inactive state, and power means for providing power to said portable electronic device, said method comprising the steps of:

awaiting for an activation cue to be received at a predetermined one of said communication ports;

if an activation cue is received at one of said communication ports, changing the state of said switching element from its default inactive state to an activated state; and

selectively triggering said control device to issue an invariable activation command, whereby said method will further comprise one of the two following steps:

if said switching element is in its activated state, initiating a data exchange with an external data exchange device through at least one of said communication ports; and

if said switching element is in its inactive state, conveying data from said electronic circuit to said user interface device for communicating information to the portable electronic device holder.

14. (Original) A method as defined in claim 13, wherein said activation cue is received at one of said communication ports distinct from another one of said communication ports used for data exchange with the external data exchange device.

15. (Original) A method as defined in claim 13, wherein the additional following step occurs after selectively triggering said control device if said switching element is in said activated state:

conveying data from said electronic circuit to said user interface device for communicating information to the portable electronic device holder.

Allowable Subject Matter

Claims 1-3, 5-11 and 13-15 are allowed for reasons that have already been made clear on the record. The only rejected claim of the previous office action, claim 12, has been cancelled according to the wishes of the applicant. Other amendments were to bring the claims in line with amended claims in a related international filing. They generally do not broaden the scope of the claims.

To reiterate:

The examiner specifically addresses the prior art of Riemschneider et al. (DE 101 46 804A) which was cited against a number of the claims in a PCT action. The examiner located an English version, WO 03027949A1 which is included herewith.

The examiner carefully reviewed that reference including those figures referenced in the International action and found no evidence of all of the limitations being met including the control device being selectively triggered to issue the invariable activation command such that if the switching element is in the activated state, a data exchange will be initiated through the

instrumentality of the data transceiver for exchanging data between the electronic circuit and an external data exchange device and if the switching element is in the inactive state, data will be conveyed from the electronic circuit to the user interface device for communicating information to the portable electronic device holder.

Elsewhere, the prior art fails to teach or fairly suggest the above limitation in the context of all other limitations present in the claims.

Conclusion

Any inquiry concerning this communication or earlier communications from the examiner should be directed to DANIEL A. HESS whose telephone number is (571)272-2392. The examiner can normally be reached on 8:00 AM - 5:00 PM M-F.

If attempts to reach the examiner by telephone are unsuccessful, the examiner's supervisor, Michael G. Lee can be reached on (571) 272-2398. The fax phone number for the organization where this application or proceeding is assigned is 571-273-8300.

Information regarding the status of an application may be obtained from the Patent Application Information Retrieval (PAIR) system. Status information for published applications may be obtained from either Private PAIR or Public PAIR. Status information for unpublished applications is available through Private PAIR only. For more information about the PAIR system, see http://pair-direct.uspto.gov. Should you have questions on access to the Private PAIR system, contact the Electronic Business Center (EBC) at 866-217-9197 (toll-free). If you would like assistance from a USPTO Customer Service Representative or access to the automated information system, call 800-786-9199 (IN USA OR CANADA) or 571-272-1000.

/Daniel A Hess/
Primary Examiner, Art Unit 2876

Index of Claims	Application/Control No.	Applicant(s)/Patent Under Reexamination
	10552912	GAILLARD, JOEL
	Examiner	**Art Unit**
	DANIEL A HESS	2876

✓	Rejected	-	Cancelled	N	Non-Elected	A	Appeal
=	Allowed	÷	Restricted	I	Interference	O	Objected

☐ Claims renumbered in the same order as presented by applicant ☐ CPA ☐ T.D. ☐ R.1.47

CLAIM		DATE								
Final	Original	06/10/2009	07/15/2009							
1	1	✓	=							
2	2	✓	=							
3	3	✓	=							
	4	✓	-							
4	5	✓	=							
5	6	✓	=							
6	7	✓	=							
7	8	✓	=							
8	9	✓	=							
9	10	✓	=							
10	11	✓	=							
	12	=	-							
11	13	✓	=							
12	14	✓	=							
13	15	✓	=							

Issue Classification	Application/Control No.	Applicant(s)/Patent Under Reexamination
	10552912	GAILLARD, JOEL
	Examiner	**Art Unit**
	DANIEL A HESS	2876

ORIGINAL		INTERNATIONAL CLASSIFICATION									
CLASS	SUBCLASS	CLAIMED					NON-CLAIMED				
235	492	G	0	6	K	19 / 06 (2006.01.01)					

CROSS REFERENCE(S)

CLASS	SUBCLASS (ONE SUBCLASS PER BLOCK)				

☐ Claims renumbered in the same order as presented by applicant ☐ CPA ☐ T.D. ☐ R.1.47

Final	Original	Final	Original	Final	Original	Final	Original	Final	Original	Final	Original	Final	Original	Final	Original
1	1														
2	2														
3	3														
-	4														
4	5														
5	6														
6	7														
7	8														
8	9														
9	10														
10	11														
-	12														
11	13														
12	14														
13	15														

NONE (Assistant Examiner)	(Date)	**Total Claims Allowed:** 13	
/DANIEL A HESS/ Primary Examiner.Art Unit 2876 (Primary Examiner)	07/15/2009 (Date)	O.G. Print Claim(s) 1	O.G. Print Figure 1

U.S. Patent and Trademark Office

Part of Paper No. 20090714

Search Notes	Application/Control No.	Applicant(s)/Patent Under Reexamination
	10552912	GAILLARD, JOEL
	Examiner	**Art Unit**
	DANIEL A HESS	2876

SEARCHED

Class	Subclass	Date	Examiner
235	380	6/11/09	DH
	487		
	492		
705	41		
Updated		7/10/09	DH

SEARCH NOTES

Search Notes	Date	Examiner
East keyword search history attached (note, some search historylost due to software crash)	6/11/09	DH
Updated	7/10/09	DH

INTERFERENCE SEARCH

Class	Subclass	Date	Examiner
See	above	7/10/09	DH

PTO/SB/06 (07-06)
Approved for use through 1/31/2007. OMB 0651-0032
U.S. Patent and Trademark Office; U.S. DEPARTMENT OF COMMERCE
Under the Paperwork Reduction Act of 1995, no persons are required to respond to a collection of information unless it displays a valid OMB control number.

PATENT APPLICATION FEE DETERMINATION RECORD

Substitute for Form PTO-875

Application or Docket Number	Filing Date	
10/552,912	02/27/2006	☐ To be Mailed

APPLICATION AS FILED – PART I

FOR	(Column 1) NUMBER FILED	(Column 2) NUMBER EXTRA	SMALL ENTITY ☒ RATE ($)	SMALL ENTITY FEE ($)	OR	OTHER THAN SMALL ENTITY RATE ($)	OTHER THAN SMALL ENTITY FEE ($)
☐ BASIC FEE (37 CFR 1.16(a), (b), or (c))	N/A	N/A	N/A			N/A	
☐ SEARCH FEE (37 CFR 1.16(k), (i), or (m))	N/A	N/A	N/A			N/A	
☐ EXAMINATION FEE (37 CFR 1.16(o), (p), or (q))	N/A	N/A	N/A			N/A	
TOTAL CLAIMS (37 CFR 1.16(i))	minus 20 =	*	X $ =		OR	X $ =	
INDEPENDENT CLAIMS (37 CFR 1.16(h))	minus 3 =	*	X $ =			X $ =	
☐ APPLICATION SIZE FEE (37 CFR 1.16(s))	If the specification and drawings exceed 100 sheets of paper, the application size fee due is $250 ($125 for small entity) for each additional 50 sheets or fraction thereof. See 35 U.S.C. 41(a)(1)(G) and 37 CFR 1.16(s).						
☐ MULTIPLE DEPENDENT CLAIM PRESENT (37 CFR 1.16(j))							
* If the difference in column 1 is less than zero, enter "0" in column 2.			TOTAL			TOTAL	

APPLICATION AS AMENDED – PART II

AMENDMENT 07/16/2009

	(Column 1) CLAIMS REMAINING AFTER AMENDMENT		(Column 2) HIGHEST NUMBER PREVIOUSLY PAID FOR	(Column 3) PRESENT EXTRA	SMALL ENTITY RATE ($)	SMALL ENTITY ADDITIONAL FEE ($)	OR	OTHER THAN SMALL ENTITY RATE ($)	OTHER THAN SMALL ENTITY ADDITIONAL FEE ($)
Total (37 CFR 1.16(i))	* 13	Minus	** 20	= 0	X $26 =	0	OR	X $ =	
Independent (37 CFR 1.16(h))	* 3	Minus	***4	= 0	X $110 =	0	OR	X $ =	
☐ Application Size Fee (37 CFR 1.16(s))									
☐ FIRST PRESENTATION OF MULTIPLE DEPENDENT CLAIM (37 CFR 1.16(j))							OR		
					TOTAL ADD'L FEE	0	OR	TOTAL ADD'L FEE	

AMENDMENT

	(Column 1) CLAIMS REMAINING AFTER AMENDMENT		(Column 2) HIGHEST NUMBER PREVIOUSLY PAID FOR	(Column 3) PRESENT EXTRA	RATE ($)	ADDITIONAL FEE ($)		RATE ($)	ADDITIONAL FEE ($)
Total (37 CFR 1.16(i))	*	Minus	**	=	X $ =		OR	X $ =	
Independent (37 CFR 1.16(h))	*	Minus	***	=	X $ =		OR	X $ =	
☐ Application Size Fee (37 CFR 1.16(s))									
☐ FIRST PRESENTATION OF MULTIPLE DEPENDENT CLAIM (37 CFR 1.16(j))							OR		
					TOTAL ADD'L FEE		OR	TOTAL ADD'L FEE	

* If the entry in column 1 is less than the entry in column 2, write "0" in column 3.
** If the "Highest Number Previously Paid For" IN THIS SPACE is less than 20, enter "20".
*** If the "Highest Number Previously Paid For" IN THIS SPACE is less than 3, enter "3".
The "Highest Number Previously Paid For" (Total or Independent) is the highest number found in the appropriate box in column 1.

Legal Instrument Examiner:
/TINA M. BELL/

This collection of information is required by 37 CFR 1.16. The information is required to obtain or retain a benefit by the public which is to file (and by the USPTO to process) an application. Confidentiality is governed by 35 U.S.C. 122 and 37 CFR 1.14. This collection is estimated to take 12 minutes to complete, including gathering, preparing, and submitting the completed application form to the USPTO. Time will vary depending upon the individual case. Any comments on the amount of time you require to complete this form and/or suggestions for reducing this burden, should be sent to the Chief Information Officer, U.S. Patent and Trademark Office, U.S. Department of Commerce, P.O. Box 1450, Alexandria, VA 22313-1450. DO NOT SEND FEES OR COMPLETED FORMS TO THIS ADDRESS. **SEND TO: Commissioner for Patents, P.O. Box 1450, Alexandria, VA 22313-1450.**
If you need assistance in completing the form, call 1-800-PTO-9199 and select option 2.

UNITED STATES PATENT AND TRADEMARK OFFICE

UNITED STATES DEPARTMENT OF COMMERCE
United States Patent and Trademark Office
Address: COMMISSIONER FOR PATENTS
P.O. Box 1450
Alexandria, Virginia 22313-1450
www.uspto.gov

APPLICATION NO.	FILING DATE	FIRST NAMED INVENTOR	ATTORNEY DOCKET NO.	CONFIRMATION NO.
10/552,912	02/27/2006	Joel Gaillard	1-37992	6905

43935 7590 07/15/2009
FRASER CLEMENS MARTIN & MILLER LLC
28366 KENSINGTON LANE
PERRYSBURG, OH 43551

EXAMINER
HESS, DANIEL A

ART UNIT	PAPER NUMBER
2876	

NOTIFICATION DATE	DELIVERY MODE
07/15/2009	ELECTRONIC

Please find below and/or attached an Office communication concerning this application or proceeding.

The time period for reply, if any, is set in the attached communication.

Notice of the Office communication was sent electronically on above-indicated "Notification Date" to the following e-mail address(es):

miller@fraser-ip.com
sloan@fraser-ip.com
clemens@fraser-ip.com

PTOL-90A (Rev. 04/07)

Interview Summary	Application No.	Applicant(s)	
	10/552,912	GAILLARD, JOEL	
	Examiner	Art Unit	
	DANIEL A. HESS	2876	

All participants (applicant, applicant's representative, PTO personnel):

(1) *DANIEL A. HESS*. (3)_____.

(2) *Mike Dockins*. (4)_____.

Date of Interview: *10 July 2009*.

Type: a)☒ Telephonic b)☐ Video Conference
c)☐ Personal [copy given to: 1)☐ applicant 2)☐ applicant's representative]

Exhibit shown or demonstration conducted: d)☐ Yes e)☐ No.
If Yes, brief description: _____.

Claim(s) discussed: *1-15*.

Identification of prior art discussed: *n/a*.

Agreement with respect to the claims f)☒ was reached. g)☐ was not reached. h)☐ N/A.

Substance of Interview including description of the general nature of what was agreed to if an agreement was reached, or any other comments:
The applicant wishes to expedite prosecution by cancelling the claim that was rejected in the 6/16/2009 Office Action as well as by making several minor amendments which generally do not broaden the scope of the claims. The examiner agreed that these changes can be done by examiner's amendment in the context of an allowance.

(A fuller description, if necessary, and a copy of the amendments which the examiner agreed would render the claims allowable, if available, must be attached. Also, where no copy of the amendments that would render the claims allowable is available, a summary thereof must be attached.)

THE FORMAL WRITTEN REPLY TO THE LAST OFFICE ACTION MUST INCLUDE THE SUBSTANCE OF THE INTERVIEW. (See MPEP Section 713.04). If a reply to the last Office action has already been filed, APPLICANT IS GIVEN A NON-EXTENDABLE PERIOD OF THE LONGER OF ONE MONTH OR THIRTY DAYS FROM THIS INTERVIEW DATE, OR THE MAILING DATE OF THIS INTERVIEW SUMMARY FORM, WHICHEVER IS LATER, TO FILE A STATEMENT OF THE SUBSTANCE OF THE INTERVIEW. See Summary of Record of Interview requirements on reverse side or on attached sheet.

/Daniel A Hess/ Primary Examiner, Art Unit 2876	

UNITED STATES PATENT AND TRADEMARK OFFICE

UNITED STATES DEPARTMENT OF COMMERCE
United States Patent and Trademark Office
Address: COMMISSIONER FOR PATENTS
P.O. Box 1450
Alexandria, Virginia 22313-1450
www.uspto.gov

APPLICATION NO.	FILING DATE	FIRST NAMED INVENTOR	ATTORNEY DOCKET NO.	CONFIRMATION NO.
10/552,912	02/27/2006	Joel Gaillard	1-37992	6905

43935 7590 06/16/2009
FRASER CLEMENS MARTIN & MILLER LLC
28366 KENSINGTON LANE
PERRYSBURG, OH 43551

EXAMINER
HESS, DANIEL A

ART UNIT	PAPER NUMBER
2876	

NOTIFICATION DATE	DELIVERY MODE
06/16/2009	ELECTRONIC

Please find below and/or attached an Office communication concerning this application or proceeding.

The time period for reply, if any, is set in the attached communication.

Notice of the Office communication was sent electronically on above-indicated "Notification Date" to the following e-mail address(es):

miller@fraser-ip.com
sloan@fraser-ip.com
clemens@fraser-ip.com

PTOL-90A (Rev. 04/07)

Office Action Summary	Application No.	Applicant(s)	
	10/552,912	GAILLARD, JOEL	
	Examiner	Art Unit	
	DANIEL A. HESS	2876	

-- The MAILING DATE of this communication appears on the cover sheet with the correspondence address --

Period for Reply

A SHORTENED STATUTORY PERIOD FOR REPLY IS SET TO EXPIRE 3 MONTH(S) OR THIRTY (30) DAYS, WHICHEVER IS LONGER, FROM THE MAILING DATE OF THIS COMMUNICATION.

- Extensions of time may be available under the provisions of 37 CFR 1.136(a). In no event, however, may a reply be timely filed after SIX (6) MONTHS from the mailing date of this communication.
- If NO period for reply is specified above, the maximum statutory period will apply and will expire SIX (6) MONTHS from the mailing date of this communication.
- Failure to reply within the set or extended period for reply will, by statute, cause the application to become ABANDONED (35 U.S.C. § 133). Any reply received by the Office later than three months after the mailing date of this communication, even if timely filed, may reduce any earned patent term adjustment. See 37 CFR 1.704(b).

Status

1)☒ Responsive to communication(s) filed on *27 February 2006*.

2a)☐ This action is **FINAL**. 2b)☒ This action is non-final.

3)☐ Since this application is in condition for allowance except for formal matters, prosecution as to the merits is closed in accordance with the practice under *Ex parte Quayle*, 1935 C.D. 11, 453 O.G. 213.

Disposition of Claims

4)☒ Claim(s) *1-15* is/are pending in the application.

4a) Of the above claim(s) _____ is/are withdrawn from consideration.

5)☐ Claim(s) _____ is/are allowed.

6)☒ Claim(s) *1-15* is/are rejected.

7)☐ Claim(s) _____ is/are objected to.

8)☐ Claim(s) _____ are subject to restriction and/or election requirement.

Application Papers

9)☐ The specification is objected to by the Examiner.

10)☒ The drawing(s) filed on *13 October 2005* is/are: a)☒ accepted or b)☐ objected to by the Examiner.

Applicant may not request that any objection to the drawing(s) be held in abeyance. See 37 CFR 1.85(a).

Replacement drawing sheet(s) including the correction is required if the drawing(s) is objected to. See 37 CFR 1.121(d).

11)☐ The oath or declaration is objected to by the Examiner. Note the attached Office Action or form PTO-152.

Priority under 35 U.S.C. § 119

12)☐ Acknowledgment is made of a claim for foreign priority under 35 U.S.C. § 119(a)-(d) or (f).

a)☐ All b)☐ Some * c)☐ None of:

1.☐ Certified copies of the priority documents have been received.

2.☐ Certified copies of the priority documents have been received in Application No. _____.

3.☐ Copies of the certified copies of the priority documents have been received in this National Stage application from the International Bureau (PCT Rule 17.2(a)).

* See the attached detailed Office action for a list of the certified copies not received.

Attachment(s)

1) ☒ Notice of References Cited (PTO-892)

2) ☐ Notice of Draftsperson's Patent Drawing Review (PTO-948)

3) ☒ Information Disclosure Statement(s) (PTO/SB/08) Paper No(s)/Mail Date *10/13/2005*.

4) ☐ Interview Summary (PTO-413) Paper No(s)/Mail Date. _____ .

5) ☐ Notice of Informal Patent Application

6) ☐ Other: _____.

DETAILED ACTION

This action is responsive to applicant's filing of 2/27/2006, which has been entered into the electronic file of record.

Claim Rejections - 35 USC § 102

The following is a quotation of the appropriate paragraphs of 35 U.S.C. 102 that form the basis for the rejections under this section made in this Office action:

> A person shall be entitled to a patent unless –
>
> (b) the invention was patented or described in a printed publication in this or a foreign country or in public use or on sale in this country, more than one year prior to the date of application for patent in the United States.

Claim 12 is rejected under 35 U.S.C. 102(b) as being anticipated by Reiner (US 5,999,713).

See the entire specification of Reiner. Reiner discloses two different conveyance functions, namely contact-based and contactless.

See column 3 of Reiner:

"Referring now in detail to the single FIGURE of the drawing, there is seen a basic circuit in which a memory 1 is connected to a coil 2. A high-frequency signal that is received is supplied from the coil 2 over a first line 6 to a processing circuit 7, which extracts the clock and the data from it and supplies them through a switch device 9 to the memory 1. The switch device 9 assumes a position of repose, in which a switch 91 of the switch device 9 connects the memory 1 constantly through the processing circuit 7 to the coil 2.

A supply voltage which is derived from the coil 2 through the use of a rectifier and smoothing circuit 3 and a control circuit 4, can be applied through a line 5 to both the processing circuit 7 and the memory 1.

A control portion 92 of the switch device 9 may be triggered by a logic circuit 8, which is advantageously constructed as a microprocessor, so that the switch 91 connects the memory 1 through the microprocessor 8 to contacts 20. However, this switchover can only occur when a supply voltage VDD is applied to a supply voltage contact 21 of the contacts 20 and supplies the microprocessor 8."

There is switching between the two modes, as well as a default mode. A cue is received externally, namely a triggering through the contacts, that causes switching into a contact-mode from the default of the contactless mode.

Allowable Subject Matter

Claims 1-11 and 13-15 are allowed.

The following is a statement of reasons for the indication of allowable subject matter:

Firstly, the examiner specifically addresses the prior art of Riemschneider et al. (DE 101 46 804A) which was cited against a number of the claims in a PCT action. The examiner located an English version, WO 03027949A1 which is included herewith.

The examiner carefully reviewed that reference including those figures referenced in the International action and found no evidence of all of the limitations being met including the

control device being selectively triggered to issue the invariable activation command such that if the switching element is in the activated state, a data exchange will be initiated through the instrumentality of the data transceiver for exchanging data between the electronic circuit and an external data exchange device and if the switching element is in the inactive state, data will be conveyed from the electronic circuit to the user interface device for communicating information to the portable electronic device holder.

Elsewhere, the prior art fails to teach or fairly suggest the above limitation in the context of all other limitations present in the claims.

Conclusion

Any inquiry concerning this communication or earlier communications from the examiner should be directed to DANIEL A. HESS whose telephone number is (571)272-2392. The examiner can normally be reached on 8:00 AM - 5:00 PM M-F.

If attempts to reach the examiner by telephone are unsuccessful, the examiner's supervisor, Michael G. Lee can be reached on (571) 272-2398. The fax phone number for the organization where this application or proceeding is assigned is 571-273-8300.

Information regarding the status of an application may be obtained from the Patent Application Information Retrieval (PAIR) system. Status information for published applications may be obtained from either Private PAIR or Public PAIR. Status information for unpublished applications is available through Private PAIR only. For more information about the PAIR system, see http://pair-direct.uspto.gov. Should you have questions on access to the Private PAIR system, contact the Electronic Business Center (EBC) at 866-217-9197 (toll-free). If you would like assistance from a USPTO Customer Service Representative or access to the automated information system, call 800-786-9199 (IN USA OR CANADA) or 571-272-1000.

/Daniel A Hess/
Primary Examiner, Art Unit 2876

Notice of References Cited	Application/Control No. 10/552,912	Applicant(s)/Patent Under Reexamination GAILLARD, JOEL	
	Examiner DANIEL A. HESS	Art Unit 2876	Page 1 of 1

U.S. PATENT DOCUMENTS

*		Document Number Country Code-Number-Kind Code	Date MM-YYYY	Name	Classification
*	A	US-5,999,713	12-1999	Reiner et al.	710/301
	B	US-			
	C	US-			
	D	US-			
	E	US-			
	F	US-			
	G	US-			
	H	US-			
	I	US-			
	J	US-			
	K	US-			
	L	US-			
	M	US-			

FOREIGN PATENT DOCUMENTS

*		Document Number Country Code-Number-Kind Code	Date MM-YYYY	Country	Name	Classification
	N	WO 3027949 A1	04-2003	World Intellect	RIEMSCHNEIDER et al.	
	O					
	P					
	Q					
	R					
	S					
	T					

NON-PATENT DOCUMENTS

*		Include as applicable: Author, Title Date, Publisher, Edition or Volume, Pertinent Pages)
	U	
	V	
	W	
	X	

*A copy of this reference is not being furnished with this Office action. (See MPEP § 707.05(a).)
Dates in MM-YYYY format are publication dates. Classifications may be US or foreign.

EAST Search History

Ref #	Hits	Search Query	DBs	Default Operator	Plurals	Time Stamp
L1	4497	235/492.ccls.	US-PGPUB; USPAT; EPO; JPO	OR	ON	2009/06/11 11:14
L2	3514	(portable adj electronic adj device).ab.	US-PGPUB; USPAT; EPO; JPO	OR	ON	2009/06/11 11:15
L3	102	2 and "235"/$.ccls.	US-PGPUB; USPAT; EPO; JPO	OR	ON	2009/06/11 11:15
L4	48	pitroda.in.	US-PGPUB; USPAT; EPO; JPO	OR	ON	2009/06/11 11:15
L5	23	4 and card	US-PGPUB; USPAT; EPO; JPO	OR	ON	2009/06/11 11:16
L6	14	("20030019942" | "4746787" | "4800255" | "5590038" | "5734154" | "5917754" | "6044470" | "6112987" | "6254001" | "6360954" | "6390373" | "6402039" | "6454172" | "6454173").PN.	US-PGPUB; USPAT; EPO; JPO	OR	ON	2009/06/11 11:18
L7	5694	235/380.ccls.	US-PGPUB; USPAT; EPO; JPO	OR	ON	2009/06/11 11:22
L8	3481	235/487.ccls.	US-PGPUB; USPAT; EPO; JPO	OR	ON	2009/06/11 11:22
L9	702	705/41.ccls.	US-PGPUB; USPAT; EPO; JPO	OR	ON	2009/06/11 11:23

L10	12273	1 or 7 or 8 or 9	US-PGPUB; USPAT; EPO; JPO	OR	ON	2009/06/11 11:23
L11	5375	10 and display	US-PGPUB; USPAT; EPO; JPO	OR	ON	2009/06/11 11:24
L12	2187	11 and switch$3	US-PGPUB; USPAT; EPO; JPO	OR	ON	2009/06/11 11:24
L13	513	12 and trigger	US-PGPUB; USPAT; EPO; JPO	OR	ON	2009/06/11 11:26

6/11/09 11:29:29 AM

Index of Claims	Application/Control No.	Applicant(s)/Patent Under Reexamination
	10552912	GAILLARD, JOEL
	Examiner	**Art Unit**
	DANIEL A HESS	2876

✓	Rejected	-	Cancelled	N	Non-Elected	A	Appeal
=	Allowed	÷	Restricted	I	Interference	O	Objected

☐ Claims renumbered in the same order as presented by applicant ☐ CPA ☐ T.D. ☐ R.1.47

CLAIM		DATE								
Final	Original	06/10/2009								
	1	✓								
	2	✓								
	3	✓								
	4	✓								
	5	✓								
	6	✓								
	7	✓								
	8	✓								
	9	✓								
	10	✓								
	11	✓								
	12	=								
	13	✓								
	14	✓								
	15	✓								

Search Notes	Application/Control No.	Applicant(s)/Patent Under Reexamination
	10552912	GAILLARD, JOEL
	Examiner	**Art Unit**
	DANIEL A HESS	2876

SEARCHED

Class	Subclass	Date	Examiner
235	380	6/11/09	DH
	487		
	492		
705	41		

SEARCH NOTES

Search Notes	Date	Examiner
East keyword search history attached (note, some search historylost due to software crash)	6/11/09	DH

INTERFERENCE SEARCH

Class	Subclass	Date	Examiner

UNITED STATES PATENT AND TRADEMARK OFFICE

UNITED STATES DEPARTMENT OF COMMERCE
United States Patent and Trademark Office
Address: COMMISSIONER FOR PATENTS
P.O. Box 1450
Alexandria, Virginia 22313-1450
www.uspto.gov

BIB DATA SHEET

CONFIRMATION NO. 6905

SERIAL NUMBER	FILING or 371(c) DATE	CLASS	GROUP ART UNIT	ATTORNEY DOCKET NO.
10/552,912	02/27/2006 **RULE**	349	2876	1-37992

APPLICANTS
Joel Gaillard, Nassau, BAHAMAS;

**** CONTINUING DATA ***************************
This application is a 371 of PCT/IB03/01523 04/14/2003

**** FOREIGN APPLICATIONS ***************************

**** IF REQUIRED, FOREIGN FILING LICENSE GRANTED** ** ** SMALL ENTITY **
08/12/2006

Foreign Priority claimed	❑ Yes ☑ No	❑ Met after Allowance	STATE OR COUNTRY	SHEETS DRAWINGS	TOTAL CLAIMS	INDEPENDENT CLAIMS
35 USC 119(a-d) conditions met	❑ Yes ☑ No		BAHAMAS	3	14	4
Verified and Acknowledged	/DANIEL A HESS/ Examiner's Signature	Initials				

ADDRESS

FRASER CLEMENS MARTIN & MILLER LLC
28366 KENSINGTON LANE
PERRYSBURG, OH 43551
UNITED STATES

TITLE

Portable electronic device capable of alternate data conveyance operations responsive to an invariable activation command

FILING FEE RECEIVED		
615	FEES: Authority has been given in Paper No._____ to charge/credit DEPOSIT ACCOUNT No._____ for following:	❑ All Fees ❑ 1.16 Fees (Filing) ❑ 1.17 Fees (Processing Ext. of time) ❑ 1.18 Fees (Issue) ❑ Other _____ ❑ Credit

BIB (Rev. 05/07).

JC20 Rec'd PCT/PTO 13 OCT 2005

#2

PTO/SB/08A (08-03)
Approved for use through 07/31/2006. OMB 0651-0031
U.S. Patent and Trademark Office; U.S. DEPARTMENT OF COMMERCE
Under the Paperwork Reduction Act of 1995, no persons are required to respond to a collection of information unless it contains a valid OMB control number.

Substitute for form 1449/PTO

INFORMATION DISCLOSURE STATEMENT BY APPLICANT

(Use as many sheets as necessary)

Sheet 1 of 1

Complete if Known	
Application Number	10/552912
Filing Date	
First Named Inventor	GAILLARD
Art Unit	2876
Examiner Name	Daniel Hess
Attorney Docket Number	1-37992

U. S. PATENT DOCUMENTS

Examiner Initials*	Cite No.[1]	Document Number Number-Kind Code[2] (if known)	Publication Date MM-DD-YYYY	Name of Patentee or Applicant of Cited Document	Pages, Columns, Lines, Where Relevant Passages or Relevant Figures Appear
		US- 5,590,038	12-31-1996	PITRODA	
		US- 5,917,754	06-29-1999	PATHAK et al.	
		US- 6,044,470	03-28-2000	KURIYAMA	
		US- 6,112,987	09-05-2000	LAMBERT et al.	
		US- 6,254,001	07-03-2001	CHAN	
		US- 6,454,172	09-24-2002	MAEDA et al.	
		US- 6,454,173	09-24-2002	GRAVES	
		US- 2003019942	01-30-2003	BLOSSOM	
		US- 6,390,373	05-21-2002	BEYER et al.	
		US- 4,800,255	01-24-1989	IMRAN	
		US- 6,360,954	03-26-2002	BARNARDO	
		US- 5,734,154	03-31-1998	JACHIMOWICZ et al.	
		US- 4,7464787	05-24-1988	SUTO et al.	
		US- 6,402,039	06-11-2002	FREEMAN et al.	
		US-			
		US-			
		US-			
		US-			
		US-			

FOREIGN PATENT DOCUMENTS

Examiner Initials*	Cite No.[1]	Foreign Patent Document Country Code[3]-Number[4]-Kind Code[5] (if known)	Publication Date MM-DD-YYYY	Name of Patentee or Applicant of Cited Document	Pages, Columns, Lines, Where Relevant Passages Or Relevant Figures Appear	T[6]
		DE 10146804	04-10-2003	PHILIPS CORP...		
		DE 4205556	08-26-1993	ANGEWANDTE...		
		DE 4203748	08-05-1993	PROVERA...		

Examiner Signature	/Daniel Hess/	Date Considered	06/10/2009

*EXAMINER: Initial if reference considered, whether or not citation is in conformance with MPEP 609. Draw line through citation if not in conformance and not considered. Include copy of this form with next communication to applicant. [1] Applicant's unique citation designation number (optional). [2] See Kinds Codes of USPTO Patent Documents at www.uspto.gov or MPEP 901.04. [3] Enter Office that issued the document, by the two-letter code (WIPO Standard ST.3). [4] For Japanese patent documents, the indication of the year of the reign of the Emperor must precede the serial number of the patent document. [5] Kind of document by the appropriate symbols as indicated on the document under WIPO Standard ST.16 if possible. [6] Applicant is to place a check mark here if English language Translation is attached.

This collection of information is required by 37 CFR 1.97 and 1.98. The information is required to obtain or retain a benefit by the public which is to file (and by the USPTO to process) an application. Confidentiality is governed by 35 U.S.C. 122 and 37 CFR 1.14. This collection is estimated to take 2 hours to complete, including gathering, preparing, and submitting the completed application form to the USPTO. Time will vary depending upon the individual case. Any comments on the amount of time you require to complete this form and/or suggestions for reducing this burden, should be sent to the Chief Information Officer, U.S. Patent and Trademark Office, P.O. Box 1450, Alexandria, VA 22313-1450. DO NOT SEND FEES OR COMPLETED FORMS TO THIS ADDRESS. **SEND TO: Commissioner for Patents, P.O. Box 1450, Alexandria, VA 22313-1450.**

If you need assistance in completing the form, call 1-800-PTO-9199 (1-800-786-9199) and select option 2.

ALL REFERENCES CONSIDERED EXCEPT WHERE LINED THROUGH. /D.H./

(12) INTERNATIONAL APPLICATION PUBLISHED UNDER THE PATENT COOPERATION TREATY (PCT)

(19) World Intellectual Property Organization
International Bureau

(43) International Publication Date
3 April 2003 (03.04.2003)

PCT

(10) International Publication Number
WO 03/027949 A1

(51) International Patent Classification[7]: G06K 19/077

(21) International Application Number: PCT/IB02/03867

(22) International Filing Date:
17 September 2002 (17.09.2002)

(25) Filing Language: English

(26) Publication Language: English

(30) Priority Data:
101 46 804.0 22 September 2001 (22.09.2001) DE

(71) Applicant *(for all designated States except US)*: **KONINKLIJKE PHILIPS ELECTRONICS N.V.** [NL/NL]; Groenewoudseweg 1, NL-5621 BA Eindhoven (NL).

(72) Inventors; and
(75) Inventors/Applicants *(for US only)*: **RIEMSCHNEIDER, Karl-Ragmar** [DE/NL]; Prof. Holstlaan 6, NL-5656 AA Eindhoven (NL). **SCHWARZ, Alexander** [DE/NL]; Prof. Holstlaan 6, NL-5656 AA Eindhoven (NL).

(74) Agent: **PETERS, Carl, H.**; Internationaal Octrooibureau B.V., Prof. Holstlaan 6, NL-5656 AA Eindhoven (NL).

(81) Designated States *(national)*: CN, JP, US.

(84) Designated States *(regional)*: European patent (AT, BE, BG, CH, CY, CZ, DE, DK, EE, ES, FI, FR, GB, GR, IE, IT, LU, MC, NL, PT, SE, SK, TR).

Published:
— *with international search report*

For two-letter codes and other abbreviations, refer to the "Guidance Notes on Codes and Abbreviations" appearing at the beginning of each regular issue of the PCT Gazette.

(54) Title: METHOD AND CIRCUIT ARRANGEMENT FOR DRIVING A DISPLAY AS WELL AS CHIP CARD WITH DISPLAY

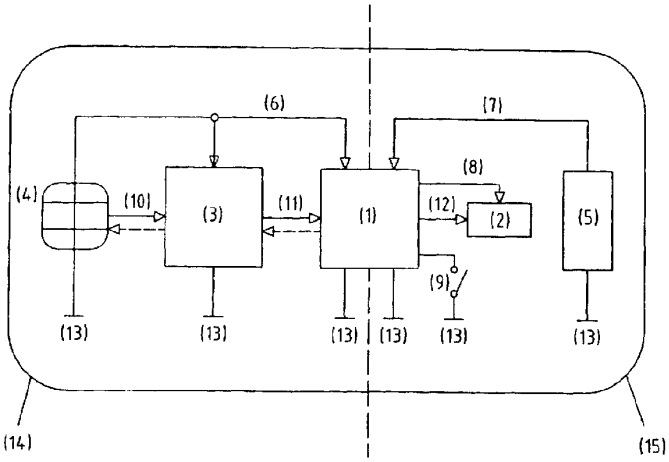

(57) Abstract: To provide a method and circuit arrangement for driving a display, in particular the display on a chip card, by means of which information optionally comprising a plurality of display images may be displayed simply and efficiently, provision is made that (a) in write mode, information to be displayed on the display which comprises at least one item of information content (display image) to be presented on the display is stored in a drive circuit associated solely with the display; (b) the ordering relationships also selectable in write mode are stored which are assigned explicitly to each of the items of information content and which determine the sequence of information contents in the event of display; (c) in read mode, the information to be displayed and comprising at least one item of information content is called up from the drive circuit and displayed on the display, wherein (d) the stored and explicitly assigned ordering relationships are taken into account with regard to the call and thus the display sequence.

WO 03/027949 A1

Method and circuit arrangement for driving a display as well as chip card with display

The invention relates to a method and circuit arrangement for driving a display, in particular a display on a chip card, as well as to a chip card with display.

The use of a display in many technical applications is known. In the context of the invention, display is understood to mean a display device which is suitable for presenting information. The information itself consists of at least one item of information content (display image) presented on the display. Such information-presenting displays are known to be connected with a master unit (controller, processor) comprising a drive circuit for the display. The master unit supplies the information to be presented on the display. Depending on the structure of the display, drive signals for the display are provided by the master unit. Thus, for example, voltages and currents are made available which are suited to driving individual segments of the display in such a way that symbols, characters or the like may be presented on the display.

If the presentation of a display image is insufficient for a particular application, subdivision of the information contents into a plurality of display images is necessary, which are presented in succession on the display. To manage such information contents requiring a plurality of display images, it is known to provide the master unit, which assumes responsibility for driving the display, with appropriate software. A disadvantage thereof is that, in particular in the case of autonomously operating technical devices, e.g. chip cards, a voltage supply must be made available to the master unit for processing information contents to be presented and driving a display presenting the information. Since the master unit has a relatively large power demand, a voltage source of appropriate size is necessary.

A chip card provided with a display is known from DE 196 31 557 A1. A drive circuit separated logically and functionally from the chip card processor is in this case associated with the display. The display and drive circuit of the display have their own voltage supply in the form of a solar cell.

A chip card with display is known from FR 2 680 260 A1 in which information contents are stored in a stack memory. The sequence in which information is read out is thus determined by the sequence in which it is written, i.e. implicitly.

It is an object of the invention to provide a method and circuit arrangement for driving a display, in particular the display on a chip card, by means of which information optionally comprising a plurality of display images may be displayed simply and efficiently.

This object is achieved according to the invention by a method having the features mentioned in claim 1. Because

(a) in write mode, information to be displayed on the display which comprises at least one item of information content (display image) to be presented on the display is stored in a drive circuit associated solely with the display;

(b) also in write mode, selectable ordering relationships are stored which are assigned explicitly to each of the items of information content and which determine the sequence of information contents in the event of display;

(c) in read mode, the information to be displayed and comprising at least one item of information content is called up from the drive circuit and displayed on the display, wherein

(d) the stored and explicitly assigned ordering relationships are taken into account with regard to the call and thus the display sequence,

it is advantageously possible to store the information to be displayed in such a way in write mode that at least one, in the simplest case precisely one, item of successor information content is predetermined for each item of information content. This successor information content is stored as an assigned reference by the assigned, co-stored explicit ordering relationships. In this way, singly concatenated lists may be built up, in which the call sequence in read mode is independent of the physical sequence in the memory. Thus, a reference (ordering relationship) is assigned to each item of information content (display image), which reference refers to the next item of information content to be displayed, this alone resulting in the display sequence on the display.

The object is further achieved according to the invention by a circuit arrangement having the features mentioned in claim 13. Because a drive circuit associated solely with the display is provided, which may be switched into write mode and read mode, wherein the drive circuit may be activated for read mode independently of a control circuit activating write mode and providing information contents to be displayed, the drive circuit comprises a non-volatile memory, wherein a first circuit unit is provided which serves in separate entry of information to be displayed, which information comprises at least one item of information content to be presented on the display, in that information contents corresponding to the information to be displayed and explicit organization relationships

assigned thereto may be stored separately, and a second circuit unit is provided which serves in reading out the information to be displayed and the assigned organization relationships, wherein the second circuit unit may be activated via a switching means, a circuit arrangement may advantageously be provided, which may be conformed simply and flexibly to various items of information to be displayed, wherein the power demand may be kept low in particular due to the simple structure of the circuit.

Preferred developments of the invention are revealed by the features mentioned in the subclaims.

Altogether, display functions may be independently performed without an active master unit (controller, processor) due to the configurations according to the invention of the method and/or the circuit arrangement for driving a display. By using structuring by means of the explicit ordering relationships, a small number of internal switching operations are sufficient in the drive circuit assigned to the display, such that, despite the possibility of being able to display a plurality of items of information content (display images), the sequence of which may be organized to suit the application, wherein only the circuit component of the drive circuit which organizes the read mode is active, the power demand is extremely small.

Finally, the method and circuit arrangement may assist flexibly in various applications, i.e. for example by being capable of varying the scope and organization of the sequence of information to be displayed or adding information contents quickly to the information to be displayed or quickly replacing, changing or removing said information.

Connection of the drive circuit of the display to the master unit (controller, processor), in particular for reception of the information to be displayed in write mode, may be simply achieved.

In a particularly preferred development of the invention, provision is made for the method and the circuit arrangement for driving a display to be implemented on a chip card comprising a display (cash card). Due to the simple structure of the circuit arrangement and the simple implementation of the method, the requirements which have to be met by a chip card with display in a card terminal, in a neutral rest state and in a user action independent of the card terminal may be fulfilled to the best possible degree.

In a card terminal, the master unit (controller, processor) of the chip card generally performs extensive, complicated operations, e.g. in order to run communications protocols or to calculate encryption algorithms. In this state, the fundamentals of the information of which the user wishes to take note on the display are generated or changed

considerably. In particular, this information may relate to numerical values of credits or debits or time details in the case of electronic time stamping processes in the card terminal.

In the neutral rest state, which constitutes the majority of the life of a chip card, no activities take place. In this state, the chip card is merely carried around by the user for later use, upon which it is woken out of its rest state into one of the active states. On the other hand, after termination, to be defined, of an activity (as a rule after a particular interval or after removal from the card terminal), the chip card may automatically itself adopt the neutral rest state.

In the event of a user action without a card terminal, which is effected by means of the chip card display, the user enters directly into communication with the chip card. The circuit arrangement according to the invention and the method according to the invention for driving a display allow these requirements to be fulfilled, in that the drive circuit for the display is so designed that it comprises mutually independently operating circuit units which may mutually independently organize write mode and read mode. Write mode and read mode operate at different times with the respectively associated circuit units and communicate with a common memory area of the drive circuit.

In the write mode provided according to the invention, which is assumed in the chip card terminal in particular in conjunction with a transaction, authentication or the like, the explicit ordering relationships and the information contents of a plurality of display images are stored. Depending on the design and layout of the chip card, this storage may be effected in contacting or contactless manner. The written information contents and ordering relationships are saved in non-volatile manner in a memory of the display drive circuit, i.e. independently of operation in the chip card terminal. The memory is preferably an EEPROM memory or, according to another preferred development of the invention, a RAM memory. In particular, the RAM memory uses CMOS technology, since this requires extremely low current input. The required operating voltage may be supplied by an internal, simply structured power source. Such non-volatile memories are in a position to store the information contents of the display images and the ordering relationships at least for a period corresponding to the normal service life of the chip cards.

In a preferred development of the invention, provision is made for the memory to be organized logically in the form of two tables, wherein a first table is used for information contents of the display images. The data of each item of information content of each display image are stored as entries in the first table (hereinafter designated record table). In a second table, the information content display sequence is organized and the assigned

explicit ordering relationships are stored. In the simplest case, this is effected in that, in the second table (hereinafter designated reference table), the table index of the next item of information content (display image) to be displayed is entered for each entry. The entry in this reference table forms a reference to at least one successor.

Access to the entries in the record table and the reference table is always made with one and the same index. The entries in the two tables may themselves vary substantially in size, however. The size of the entries in the record table depends on the scope of a display image, while the size of the entries in the reference table depends on the index length necessary for the size of the tables. Where there is more than one successor index per entry in the reference table, from which one is always selected by particular signals or states, the memory space of an entry increases accordingly.

In the read mode according to the invention, which may be adopted independently of the chip card terminal, the memory is read out. By actuating the switching means, the information contents of the display images are displayed in succession in the stored sequence predetermined by the ordering relationships. The table index is applied to both tables in an address register, beginning with a start value, as a memory address. The currently addressed entry is thereby read out from the reference table and fed to the drive connections of the display. It is clear that the signals generated thereby are conformed to the display actually present (matrix, 7 segment digits, alphanumeric displays or the like).

If the next display image is to be displayed, the content of the currently addressed entry of the reference table is accepted into the address register. According to a further preferred development of the invention, in the case of a plurality of stored successor indices, the chosen index is selected in the entry. The process of acceptance into the address register proceeds either on an external signal, e.g. by actuating the switching means, or independently after a predeterminable period of time.

It is clear that even with relatively small displays, e.g. chip cards, relatively extensive information contents may thus be displayed in a sequence of display images. Of particular advantage is the restriction of switching activity in read mode to a few active parts of the display drive circuit. The procedures for progressing the sequence of information contents (display images) are limited to reading out individual table entries from the memory, transfers from the reference table into the address register occurring at relatively large intervals and addressing of the memory, on the basis of the current content of the address register.

Thus, simple circuits with a clear structure and low power demand may be produced. Link-up of the drive circuit of the display to a master unit (controller, processor) of the chip card may proceed by serial connection or a serial data bus. In a preferred development of the invention, provision is made for a bus protocol to I^2C standard to be provided, with a two-wire connection between master unit and display drive circuit.

By separating the circuit components of the circuit arrangement for write mode and read mode, the internal power source may in particular be limited to the power demand in read mode, since, during write mode, the chip card is coupled to the chip card terminal and may be supplied with the necessary power thereby. Thus, more extensive, complex operations of the display drive circuit may also be triggered by the greater quantity of power supplied in this case when the drive circuit is in write mode. Thus, for example, the modular design of the protocol of the interface between master unit and display drive circuit may be supported at a higher logic level. By suitable software design, the master unit may also organize ordering relationships for the information contents which are more complicated, from the point of view of structure, than a simple continuous sequence. These ordering relationships may be generated and modified in particular in relation to the application and then entered in initializing manner into the reference table.

By the explicit storage of the ordering relationships in the reference table, provided according to the invention, support is provided for rapid operation for the information contents of the individual display images. In this way, an additional time requirement in write mode, as is actually available during communication of the chip card with the chip card terminal, is not necessary. In the case of the explicit fixed ordering relationships, any removal is associated merely with the effort involved in changing the successor reference of the predecessor(s). The successors of the entry in the record table to be removed are entered therein. Reordering of the information contents of the display images which are stored in the record table also relates only to the reference table. Since this is typically substantially smaller in data scope than the record table, simpler and quicker handling is provided.

Insertion of the information contents of display images may likewise proceed very advantageously at any point in the record table, without displacement of the subsequent part of the record table. This means that full reading out and re-storing of the data content of the entire record table is thus dispensed with. To this end, the information content (display image) to be inserted is written to an entry in the record table which is free or is coming free. Actual insertion is effected by a small number of entries in the reference table storing the

ordering relationships. Cyclical concatenation of the information contents is also possible in that an entry is referenced as its own direct or indirect successor. This may occur directly by means of writing-in of the current index into the current reference entry. Cyclical concatenation arises indirectly in that a later reference entry in the successor chain is back-referenced to the current entry.

If the record table and reference table are used as a basis for the construction of a dynamic data structure, singly or doubly concatenated lists, trees, cyclical extensions thereof and other organizational forms may preferably be produced. The selected structure with record table and reference table also allows simple data organization, however. To this end, a fixed sequence may preferably be produced in the reference table in a single operation with an initialization routine. Initially, the next entry may preferably be entered in fixed manner as the respective successor. This data organization is performed by the master unit (controller, processor) and may be selected with a wide degree of freedom in accordance with the desired application.

In a further preferred development of the invention, error handling is provided. In this way, interrupted and incomplete data transactions using the chip card terminal may either be displayed and/or labeled for subsequent correction. Arbitrary, accidental interruption of transactions, in particular by premature removal of the chip card from the chip card terminal, may then be taken into account. In this way, it is possible for operations being written in write mode according to the invention into the memory of the drive circuit not to be concluded. A valid flag, which is reset before writing is begun and is set to valid again after conclusion thereof and optionally after testing by reading and comparison of the writing, may prevent unnoticed errors which arise in this way.

In addition, provision is made in a preferred development of the invention for a general error protection or error handling process to be provided for communication between drive circuit and master unit (controller, processor), which is preferably distinguished by low effort. This may relate, for example, to the detection of process synchronization problems caused by external events by means of flagging mechanisms known per se.

The complete conclusion of operations is preferably also ensured by additional blocking times until both sides are reset to valid after the last transmission between master unit (controller, processor) and display drive circuit or chip card terminal. In this way, it is advantageously achieved that the validity of transmission operations may be signaled by flag states. Before a new transaction is begun, the valid conclusion of the last transaction is tested,

with a suitable response in the event of invalidity, e.g. at least one attempt at repetition. The error handling which is preferably provided is also determined by the specific application, in particular by whether and to what extent it is to occur.

Thus, in a further preferred development of the invention, provision may be made for error handling by initializing entries in an initial write operation to be dispensed with even when the latter are provided in fixed manner in read mode by the circuit arrangement. Provision may in particular be made for duplicated table entries to be able to by-pass error handling in the event of errors and also for normal functioning.

In a further preferred development of the invention, provision is made for at least one self-exhausting and/or continuously regenerable internal power source to perform read mode. A self-exhausting power source may take the form of a primary battery, for example. A regenerable power source may for example be a solar cell or a piezoelectric crystal. A piezoelectric crystal offers the possibility, in particular, that, by actuating a switching means, e.g. the switching means for activating read mode, generation of the required electrical power may be triggered. A very compact, robust construction of the circuit arrangement is produced thereby. When using chip cards in particular, very advantageous application possibilities are thereby obtained. According to further preferred developments, an accumulator may also be used as regenerable power source, which accumulator may be rapidly charged for example during chip card terminal operation. Finally, in a preferred variant of embodiment, the regenerable power source takes the form of a capacitor, which is in a position to store power charges for an adequate length of time. It goes without saying that, according to further preferred developments of the invention, at least one of the self-exhausting and/or at least one of the regenerable power sources may be combined.

Further preferred developments of the invention are obtained in that at least parts of the circuit arrangement for driving the display are structured in one or more layers of the display or in a switching circuit integrated into the display. The "chip-on-glass" or "chip-on-plastics" production processes known per se may preferably be used therefor. In addition, the drive circuit or at least parts of the drive circuit are preferably integrated into surfaces next to and/or between the display elements. It is additionally feasible to subdivide the circuit arrangement, i.e. to incorporate at least one circuit unit, in particular the circuit components forming the record table and/or reference table, in the vicinity of the display.

In a further preferred development of the invention, provision is made for the circuit arrangement for driving the display to receive a clock supply from the chip card terminal in write mode and for an internal clock supply to be generated in read mode, in

particular by an oscillator. It is especially possible to dispense with the internal oscillator for clock supply when read mode is achieved without an inherent clock oscillator, in that external signals, in particular actuation of the switching means, in each case supply a pulse defining the next state. In this way, the circuit arrangement may be produced particularly simply.

The chip cards with display according to the invention may be used for example as electronic purses (cash cards), check and/or credit cards, store cards, discount cards, loyalty cards, telephone cards, health insurance cards, fuel cards, identity cards, top-up cards for mobile telephones or the like. Additional information is made available to the card holders via the display, which, for example, makes the transaction processes performed with the card immediately transparent. Further preferred applications consist for example in transmitting validation of entry cards, travel cards, daily, weekly or monthly season tickets or the like from appropriate automatic machines to a chip card with display according to the invention in a manner comprehensible to the user. Such validation or the implementation of such validation may preferably be associated with an automated payment function, e.g. by debiting a corresponding value in a chip card terminal. In addition to recognition of validation, it may also be made possible to document cancellation or partial cancellation of implemented validation and to make this requirement visible to a user or an authorized inspector of the card with display. In addition, it is preferably possible to provide the chip cards according to the invention with additional information, e.g. seat reservations, time information, public transport connections, transport information, weather information, advertisements or the like. Information displayable on the display may for example be additionally secured by an access security means, which is preferably combined with the chip card. This may be implemented for example by providing a particular input combination or input sequence or a biometric feature. In the case of biometric features, the chip cards according to the invention may also be used for example as legitimation cards (identity card, passport or the like).

Finally, in a further preferred development of the invention, provision is made for the method according to the invention and the circuit arrangement according to the invention for driving a display to be applied in drive circuits for displays in or on mobile devices or systems. Such an application is provided for example in the case of cell phones or wireless landline telephones, in which, in addition to the actual functions thereof, additional functions may be obtained which manage with a low power demand when in read mode. These may comprise telephone book displays, independent displays of SMS messages or the

like, for example. Thus, such information could be displayed on the display even when the actual functions of such devices are no longer usable due to a discharged main accumulator.

It is additionally advantageously possible to provide the additional information retrievable in read mode in the periods in which the mobile devices are in a rest state (stand-by state). Thus, activation of the main power supply of the mobile devices would not be necessary for the display of additional information.

Further preferred options for application of the invention include remote operation of electronic devices, e.g. home electronics, especially for displaying operating functions or acknowledgement signals from remote-controllable devices. Further preferred applications include for example pagers, telephones, electronic car keys, goods recording devices, electronic toys or the like. Moreover, one preferred application is in measuring instruments. In these, a measurement, measurement series or the like recorded by the measuring instrument could be read out on the display, even without full functioning of the measuring instrument. Examples of such devices are energy meters, alarm systems, on-board computers, payment terminals, acceleration and radiation protocol devices, dosimeters, chemical instruments, medical instruments or the like.

In conclusion, it should be noted that the method according to the invention and circuit arrangement according to the invention may be used in devices in which information or additional information is to be displayed without activating the actual device function or the main supply thereof, or if the latter is interrupted. From all the above, it is clear that the method according to the invention and the circuit arrangement according to the invention allows a separate display drive, which accepts information contents for one or more display images in write mode and outputs the information contents for one or more display images in read mode. Explicit storage of the ordering relationships of the display images in the reference table of the memory is implemented for the sequence of the display images. Progression of the sequence itself may be achieved by user interaction or independently under time-control. Control of said progression uses the entered ordering relationships in the reference table, to determine the respective next display image. The circuit required for read mode makes direct use of the entries in the reference table of the memory. It is therefore simply structured and constructed in power-saving manner. Short data transfer times may be achieved in write mode by a suitable organizational form for the ordering relationships to be explicitly fixed.

Further preferred developments of the invention are revealed by the remaining features mentioned in the subclaims.

The invention will be further described with reference to examples of embodiments shown in the drawings, to which, however, the invention is not restricted:

Fig. 1 is a survey diagram of a typical chip card with display and contacts;

Fig. 2 is a block diagram of the display drive circuit in write mode;

Fig. 3 is a block diagram of the display drive circuit in read mode;

Fig. 4 is a schematic representation of the operating mode procedures and memory organization;

Fig. 5 shows the procedure for deleting a display image from a sequence;

Fig. 6 shows the procedure for inserting display images into a simple reference list;

Fig. 7 shows an example of the data structure in the case of a purse chip card with display;

Fig. 8 shows a drive application in a contact-less chip card and

Fig. 9 shows a drive application in a contact-less chip card and charging of the internal power source.

Fig. 1 shows the survey diagram of a typical chip card with display and contacts. A display drive circuit 1 is shown in central position. To the right thereof is a display 2 and to the left a chip card controller 3 and a contact field 4. At the right-hand edge an internal power source 5 is shown symbolically, this taking the form, for example, of a battery, an accumulator or a solar cell. From the contact field 4 there extend lines 6 for the operating voltage and clock supply to the chip card controller 3 and the display drive circuit 1.

The internal operating voltage is conveyed via a connection 7 from the power source 5 to the drive circuit 1 and optionally thence via a line 8 to the display 2, while being adapted to the display technology.

A momentary contact switch 9 (switching means, e.g. a snap-action disk or flat switch) is connected to the drive circuit 1.

The information from the chip card terminal is transmitted from the contact field 4 to the controller 3 via data lines 10; serial transmission formats are typically used. Likewise, in numerous applications, data flows thereover in the opposite direction.

Information from the chip card controller 3 to the drive circuit 1 is entered only in write mode, this being effected via a data connection 11 which is used, for example, for serial transmission or with a bus protocol. Only reading of status information or read-out operations (e.g. for control purposes) proceed exceptionally in the opposite data direction. The segments of the display are operated from the display drive circuit 1 via control terminals 12. All the components exhibit a common ground connection 13.

The circuit part 14 extending in the drawing from the left to the middle is active in write mode, while the right-hand circuit part 15 is active in read mode. Only the drive circuit 1 operates in both modes. This is shown in more detail in the subsequent drawings.

Figs. 2 and 3 show the block diagram of the display drive circuit 1. The situation in the drawings symbolizes subdivision into components only for write mode (left) and only for read mode (right). In the middle, components are illustrated which are used in both modes.

The operating voltages are supplied by conditioning circuits 17 or 18, of which there is one each for the terminal supply voltage 22 or an internal source 23.

The terminal supply voltage 22 is used in write mode and then supplies a non-volatile EEPROM memory 16 and a write mode control circuit 19. This accepts data from the controller and forwards it via switching logic 26 (here illustrated schematically as a switch) to the EEPROM 16. However, it also allows individual read operations, for instance for monitoring purposes or in order to accept entered error states for error handling. The switching logic is actuated by the terminal supply voltage 22 via a control signal 25, such that write mode is constantly active when the terminal supply voltage 22 is applied. Read mode can only be adopted when no terminal supply voltage 22 is applied.

On the right-hand side, a control circuit 20 for read mode and a driver circuit 21 for the display lines are shown, which drive the display segments. These are supplied in read mode by the internal power source 23 via the conditioning circuit 18.

This circuit block may additionally assume control of the adoption of sleep mode with minimal power consumption and of waking therefrom. In sleep mode, the circuit blocks hitherto supplied in read mode are switched off.

To be woken from sleep mode into read mode, the circuit is connected with a switching means (momentary contact switch) 24. If the momentary contact switch 24 is not actuated for a predeterminable time in read mode, sleep mode is resumed.

Fig. 3 is a schematic representation of switchover of the switching logic 26 into read mode. Here, the EEPROM memory 16 is switched over from the write mode control circuit 19 to the read mode control circuit 20. The circuit blocks otherwise correspond to those of Fig. 2.

Fig. 4 is a schematic representation of the operating mode procedures and memory organization. It is shown therein that the ordering relationships and the contents are entered in write mode. The EEPROM memory 16 of the display drive circuit 1 is divided into a table of references (left, hereinafter also designated reference table) and a table for the display images (right, hereinafter also designated record table). In read mode, references are read out and used as a new index after a key stroke and additionally the currently indexed display image is forwarded to the display. In Fig. 4, the following abbreviations are used: S = write mode. L = read mode, OB = image ordering, IB = image information, AB = current image, I = index and NJ = next index.

Fig. 5 shows the procedure for deleting one of the display images, which are organized in each case with regard to the immediate successor in relation to their sequence in a simple reference list. Clear therefrom is the small amount of effort involved, merely one write operation being required in the reference list. No gap arises in the reference list - it may continue to be read out along the ordering relationships (reference to the next element) by the read mode circuit without special treatment of deleted entries.

The upper part of Fig. 5 shows the state prior to deletion and the lower part shows the state after deletion for a portion of the record table. First of all, three display images 27, 28 and 29 are shown with the associated references 30, 31 and 32. They are concatenated in such a way that the image 27 is followed by the image 28 and the latter in sequence by the image 29. The arrows symbolize the concatenation.

If, by way of example, it is then desired to remove the middle display image 28 from the three images, the reference 30 is overwritten in such a way that the index of the reference 32, which matches the display image 29, is entered at that point.

Consequently, the display image 28 to be deleted no longer appears in the sequence.

Clearly, the advantage from the point of view of time saving is obtained by the explicit storage of the ordering relationships, said advantage being obtained by the storage space for the references.

This example easily clarifies the advantages of the explicit ordering according to the invention over conventionally obvious implicit ordering.

In the case of implicit ordering, i.e. in the case of consecutive storage without references, all the images after the one to be deleted would have to be displaced. For the task given in the example, it would then be necessary to read and write at least the image 29 and any that may follow, wherein each image typically comprises considerably more data than a reference. Thus, during the period in which the chip card is in use in or at the terminal, substantially more data would have to be moved between chip card controller and drive circuit, which would have the consequence in particular of prolonging the transactions to an undesirable degree.

Fig. 6 shows the procedure for inserting a display image, the sequence being organized in a simple reference list.

The upper part of the drawing shows a portion of the record tables with entries for three display images 33, 34 and 35. Furthermore, the references 37, 38 and 39 are so concatenated that image 34 follows display image 33, and is in turn followed by image 35. The arrows symbolize the concatenation.

A free entry 36/40 is also shown in one of the tables. The state prior to insertion is thus illustrated.

A new image is to be inserted after display image 33. To this end, the content of the display image to be inserted is entered in the entry 36 in the record table. The reference 37 is then changed to the index of the entry 40/36. Moreover, the corresponding index for the successor 38/34 is written in the reference 40.

The lower part of the drawing then shows the state after insertion.

Altogether, it is clear that no complex re-storing is necessary when the explicit ordering relationships are organized in the form of a concatenated reference list.

As with the example in Fig. 5, a comparison with conventionally obvious implicit ordering shows the massive advantage. Finally, with this insertion operation too, the chip card transaction in or at the terminal does not have to be prolonged substantially.

Fig. 7 shows an example of a data structure for an electronic purse or a payment receipt on a chip card. The display images shown to the right contain as first entry the debited amount (here 104.80 value units). There then follow the last transactions (most recent -4.30 value units, preceded by -5.20 value units, then in order by -1.66, -2.05, +100.00, -0.66, -0.12, -1.11 and +20.00 value units). The entries 0.00 and -0.44 value units are not accessed, they may have been deleted earlier, for example. The indices begin with the index 0. Each entry in the table has precisely one index. In this case, the index entries 0, 1, 2, 3 ... etc are designed to run from bottom to top.

The index 0 is also generated in the index register when read mode is switched on. This index 0 is also intended to relate to the initial entry in the reference table, which is also used as a reference after wake-up from sleep mode.

The reference table contains a simple sequence list (indices 1, 2, 3, 6, 5, 8, 10, 11, 12, 13, 0). The entry at index 14 refers to the index 0, thereby closing the cycle. This example shows that the implicit index sequence may be complied with in referencing by corresponding explicit entries (e.g. ...1, 2, 3, ... or ...11, 12, 13, ...), but in other cases does not have to be taken into account (e.g. ...6, 5, 8, 10, 12, ... or ...13, 0, ...). A flexible, optional organization option is provided by suitable entries in the ordering relationship reference table. The bottom part shows the common index register for both tables, progression being shown symbolically by a pulsed clock signal.

Fig. 8 shows application of the drive circuit according to the invention in a contact-less chip card. The contact field is replaced here by the antenna 41 with receive circuit. It supplies power, clock and information. For low and moderate frequencies, the antenna often takes the form of a coil. For higher frequencies, other structural forms are used, e.g. dipole or planar array antennas. Contact-less coupling to a terminal may also be achieved capacitively. The other components and connections shown in the Figure correspond to those of Fig. 1.

Fig. 9 shows a drive application in a contact-less chip card and charging of the internal power source.

As in Fig. 8, an antenna 41 produces the connection to the terminal. The voltage for write mode, which was obtained from the antenna, simultaneously charges a regenerable internal power source 44. To this end, the connecting line 42 between the drive circuit 1 and the power source 44 is used for the charging current and for the discharging current in read/display mode.

The drive circuit 1 has been extended by a changeover switch 43. By way of example, a capacitor is shown as a regenerable source 44, but accumulators are also possible. The other components and connections shown and indexed in Fig. 9 correspond to those in Fig. 1.

LIST OF REFERENCE NUMERALS

1	Drive circuit
2	Display
3	Chip card controller
4	Contact field
5	Power source
6	Line
7	Connection
8	Line
9	Momentary contact switch
10	Data line
11	Data connection
12	Control terminals
13	Ground connection
14	Circuit part
15	Circuit part
16	EEPROM memory
17	Conditioning circuit
18	Conditioning circuit
19	Write mode control circuit
20	Read mode control circuit
21	Driver circuit
22	Chip card terminal supply voltage
23	Internal power source
24	Switching means (momentary contact switch)
25	Control signal
26	Switching logic
27	Display image
28	Display image
29	Display image
30	Reference
31	Reference

32	Reference
33	Display image
34	Display image
35	Display image
36	Table
37	Reference
38	Reference
39	Reference
40	Table
41	Antenna
42	Connecting line
43	Changeover switch
44	Power source
S	Write mode
L	Read mode
OB	Image ordering
IB	Image information
AB	Current image
I	Index
NJ	Next index

CLAIMS

1. A method of driving a display, in particular a display on a chip card, having the steps:

(a) in write mode, information to be displayed on the display which comprises at least one item of information content (display image) to be presented on the display is stored in a drive circuit associated solely with the display;

(b) also in write mode, selectable ordering relationships are stored which are assigned explicitly to each of the items of information content and which determine the sequence of information contents in the event of display;

(c) in read mode, the information to be displayed and comprising at least one item of information content is called up from the drive circuit and displayed on the display, wherein

(d) the stored and explicitly assigned ordering relationships are taken into account with regard to the call and thus the display sequence.

2. A method as claimed in claim 1, characterized in that

(a) the read mode is adopted by means of an external wake-up signal from a rest state (sleep mode), without activity apart from retaining the ability to respond to wake-up signals;

(b) then, as the first of the display images, a display image determined by the predeterminable ordering relationship is displayed, wherein this ordering relationship was stored at a fixed initial entry, which is evaluated as a result of the wake-up signal.

3. A method as claimed in claim 2, characterized in that read mode is terminated after the expiry of a predeterminable period, for transfer back into the rest state (sleep mode).

4. A method as claimed in claim 2, characterized in that the external wake-up signal is generated by manual actuation of a momentary contact switch.

5. A method as claimed in one of the preceding claims, characterized in that

(a) the data of the display images are stored in a record table, in which each entry corresponds to an image;

(b) the data of the ordering relationships for displaying the display images are stored in a reference table, wherein each entry corresponds to the table index of the next display image to be displayed and of the next entry/ies in this ordering relationship table.

6. A method as claimed in claim 5, characterized in that

(a) the next one of the display images is displayed after manual actuation of a momentary contact switch,

(b) wherein the index of the next table entry to be displayed of the display images is read out from the current entry in the ordering relationship reference table and

(c) this index points at the same time to the next entry in the ordering relationship reference table.

7. A method as claimed in claim 6, characterized in that

(a) each entry in the ordering relationship reference table is divided into a plurality of portions, each of which contains a successor index;

(b) each of these portions of the table entries is read out individually as desired, if an associated momentary contact switch has been actuated;

(c) a display image selected as the next is displayed after actuation of one of a plurality of momentary contact switches,

(d) wherein the index of the next table entry to be displayed of the display images is read out from a portion (associated with the actuated momentary contact switch) of the current entry in the ordering relationship reference table and

(e) this index points at the same time to the next entry in the ordering relationship reference table.

8. A method as claimed in one of claims 5 to 7, characterized in that a signal replaces actuation of the momentary contact switch(es), which signal is generated automatically after a predeterminable period.

9. A method as claimed in one of claims 5 to 8, characterized in that referencing via the indices, which are stored in the ordering relationship reference table, produces

concatenation of all valid display images, wherein each reference refers to at least one of the successors, such that an at least singly concatenated list is formed.

10. A method as claimed in claim 9, characterized in that concatenation produces at least a cyclical sequence of the displayed display images.

11. A method as claimed in one of claims 7 to 10, characterized in that the adoption of an error state is represented by the display of a particular display image from a reserved table entry, wherein the index for accessing this table entry by the process of error detection is generated by the write mode control circuit.

12. A method as claimed in one of claims 7 to 10, characterized in that

(a) the continued existence of an error state after renewed determination of the display sequence is represented by the display of a special display image from a reserved table entry, wherein the index for accessing this table entry by the process of error detection is generated by the read mode control circuit, and

(b) is entered in the ordering relationship table as an initial index.

13. A circuit arrangement for driving a display, in particular a display on a chip card, characterized by a drive circuit (1) associated solely with the display (2), which may be switched into write mode and read mode, wherein the drive circuit (1) may be activated for read mode independently of a control circuit activating write mode and providing information contents to be displayed, the drive circuit (1) comprises a non-volatile memory (16), wherein a first circuit unit (17) is provided which serves in separate entry of information to be displayed, which information comprises at least one item of information content (display image) to be presented on the display (2), in that information contents corresponding to the information to be displayed and organization relationships assigned thereto may be stored separately, and a second circuit unit (20) is provided which serves in reading out the information to be displayed and the assigned organization relationships, wherein the second circuit unit (20) may be activated via a switching means (24).

14. A circuit arrangement as claimed in claim 13, characterized in that the drive circuit is arranged spatially separately from the master circuit (3) supplying the information to the displayed.

15. A circuit arrangement as claimed in one of claims 13 and 14, characterized in that the drive circuit (1) is arranged spatially within the display component.

16. A circuit arrangement as claimed in claim 15, characterized in that the drive circuit (1) is arranged as the first in a series of series-connected circuit components of the display component downstream of the interface with the chip card controller.

17. A circuit arrangement as claimed in claims 13 to 16, characterized in that the drive circuit (1) is supplied in each operating mode (write mode, read mode) from its own, separate power source.

18. A circuit arrangement as claimed in claim 17, characterized in that the power source for read mode is an electrochemical power source (primary battery/accumulator) and/or a long-life capacitor and/or a solar cell/solar panel and/or a piezoelectric crystal element, which supplies electrical power as a result of manual exertion of pressure, and/or a thermoelectric cell (peltier element), which supplies electrical power as a result of temperature differences due to hand contact.

19. A circuit arrangement as claimed in claim 18, characterized in that

(a) after a use-determined interruption of the power source (blocking of light/termination of pressure or heat supply) in read mode, the rest state is adopted and then read mode automatically resumes when this interruption stops;

(b) upon resumption, the sequence of display images starts again, starting from a fixed initial entry or the non-volatilely buffered state directly before the use-determined interruption;

(c) wherein the explicitly stored ordering relationships of this initial entry or this state are read out to determine the first display image to be displayed after resumption.

20. A circuit arrangement as claimed in claim 17, characterized in that the power source for write mode is provided by a chip card terminal, which supplies the operating voltage via contacts.

21. A circuit arrangement as claimed in claim 17, characterized in that the power source for write mode is provided by a chip card terminal, which introduces electrical power into the circuit in contactless manner via electromagnetic AC fields.

22. A circuit arrangement as claimed in one of claims 13 to 21, characterized in that the control circuit clock pulse signal for write mode is provided by a chip card terminal.

23. A circuit arrangement as claimed in one of claims 13 to 22, characterized in that the control circuit clock pulse signal for read mode is generated autonomously in the mobile chip card apparatus.

24. A circuit arrangement as claimed in one of claims 13 to 22, characterized in that the progression signal for changing the display image to be displayed is supplied from a source which is external relative to the drive circuit.

25. A circuit arrangement as claimed in claim 24, characterized in that the progression signal is generated by momentary contact switch actuation.

26. A circuit arrangement as claimed in claim 24, characterized in that the progression signal is generated automatically by a time-determined circuit part after a predeterminable time.

27. A circuit arrangement as claimed in one of claims 13 to 24, characterized in that

(a) there exists a data connection (11) to the display drive circuit (1) from the master circuit (3), which supplies the information to be displayed, and

(b) this data connection serves in serial transmission in write mode of the information to be stored.

28. A circuit arrangement as claimed in one of claims 13 to 24, characterized in that

(a) there exists a data connection (11) to the display drive circuit (1) from the master circuit (3), which supplies the information to be displayed, and

(b) this data connection has a bus protocol for transmission in write mode of the information to be stored.

29. A circuit arrangement as claimed in one of claims 13 to 28, characterized in that electrically erasable programmable read-only memory cells (EEPROM) (16) also store the data of the display images and the image ordering relationships in non-volatile manner when the drive circuit (1) is in neither write mode nor read mode.

30. A circuit arrangement as claimed in claim 28, characterized in that low power consumption volatile memory cells replace the non-volatile memory cells of the stated claim and these are supplied continuously by the read mode power source.

31. A chip card, characterized by a circuit arrangement as claimed in at least one of claims 13 to 30.

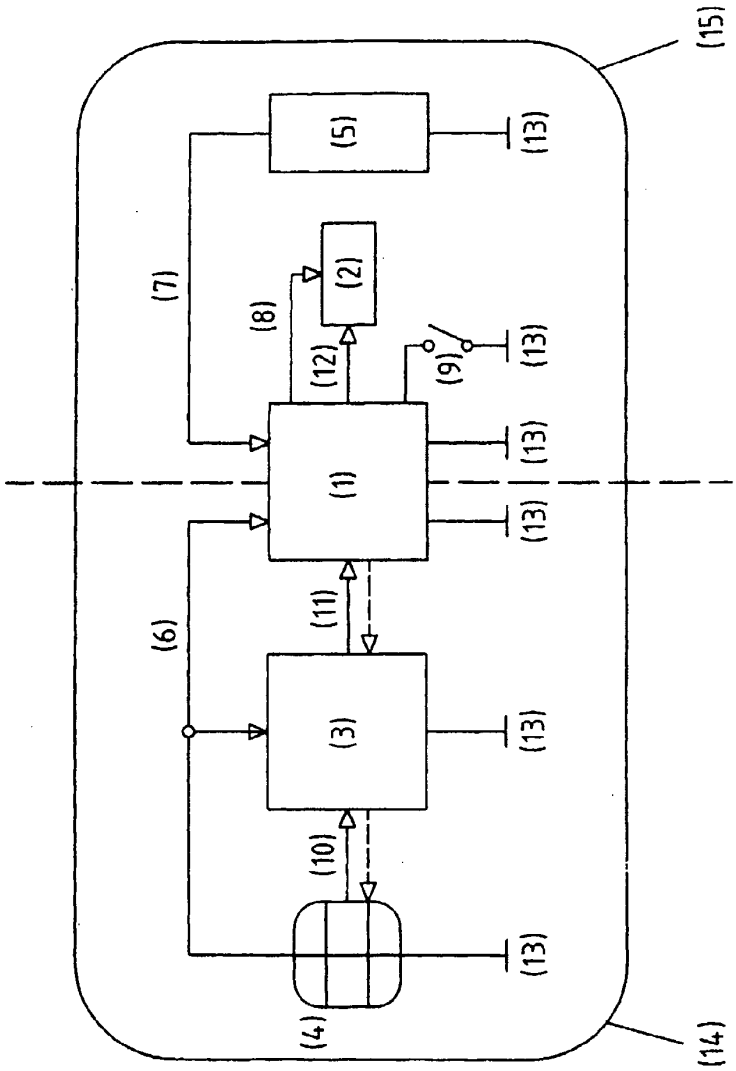

FIG. 1

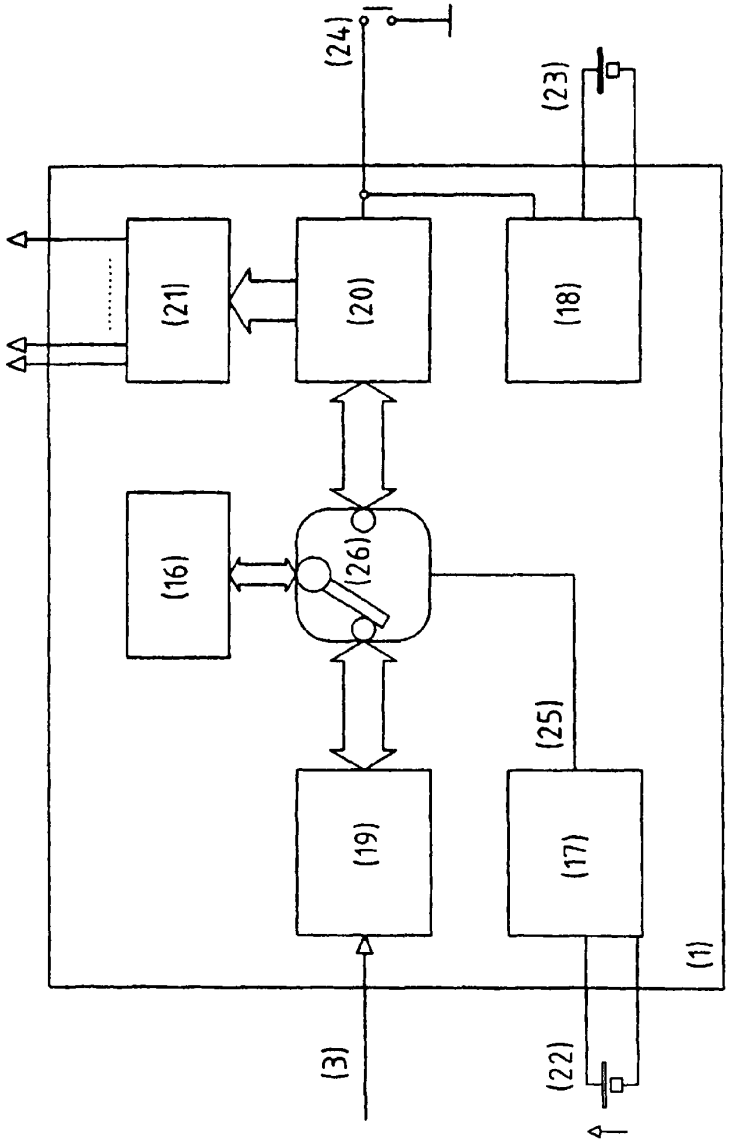

FIG.2

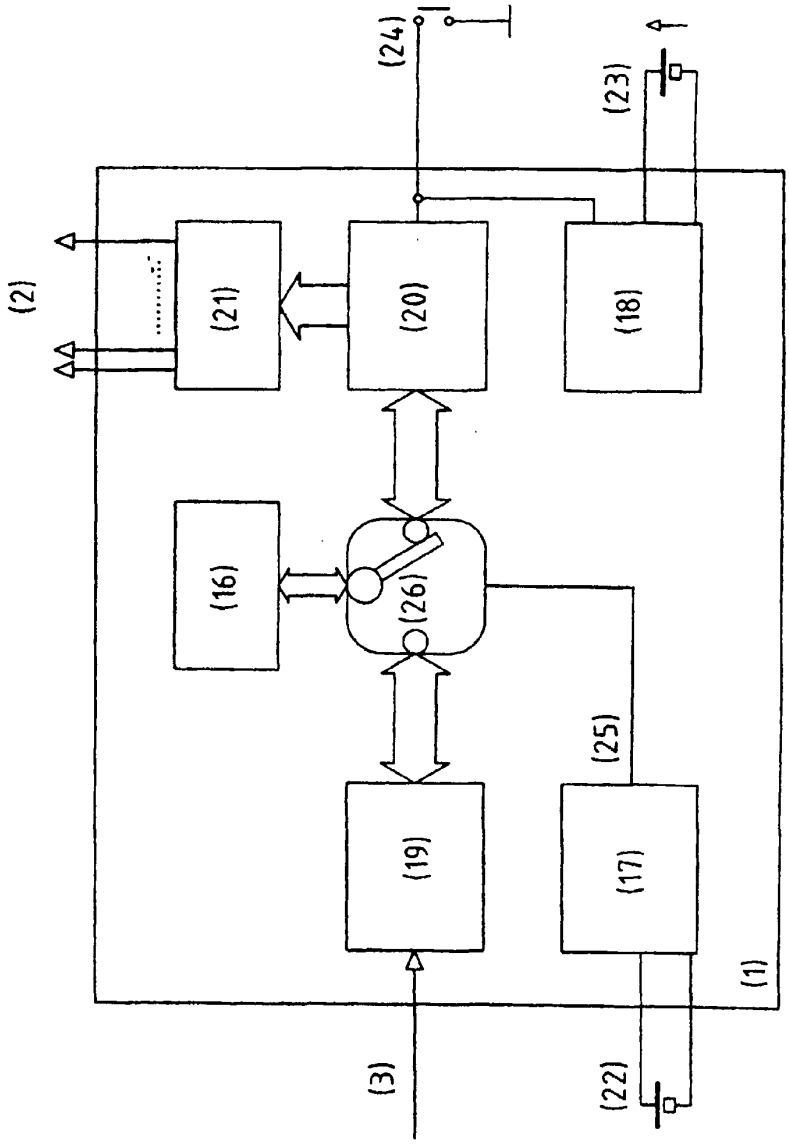

FIG.3

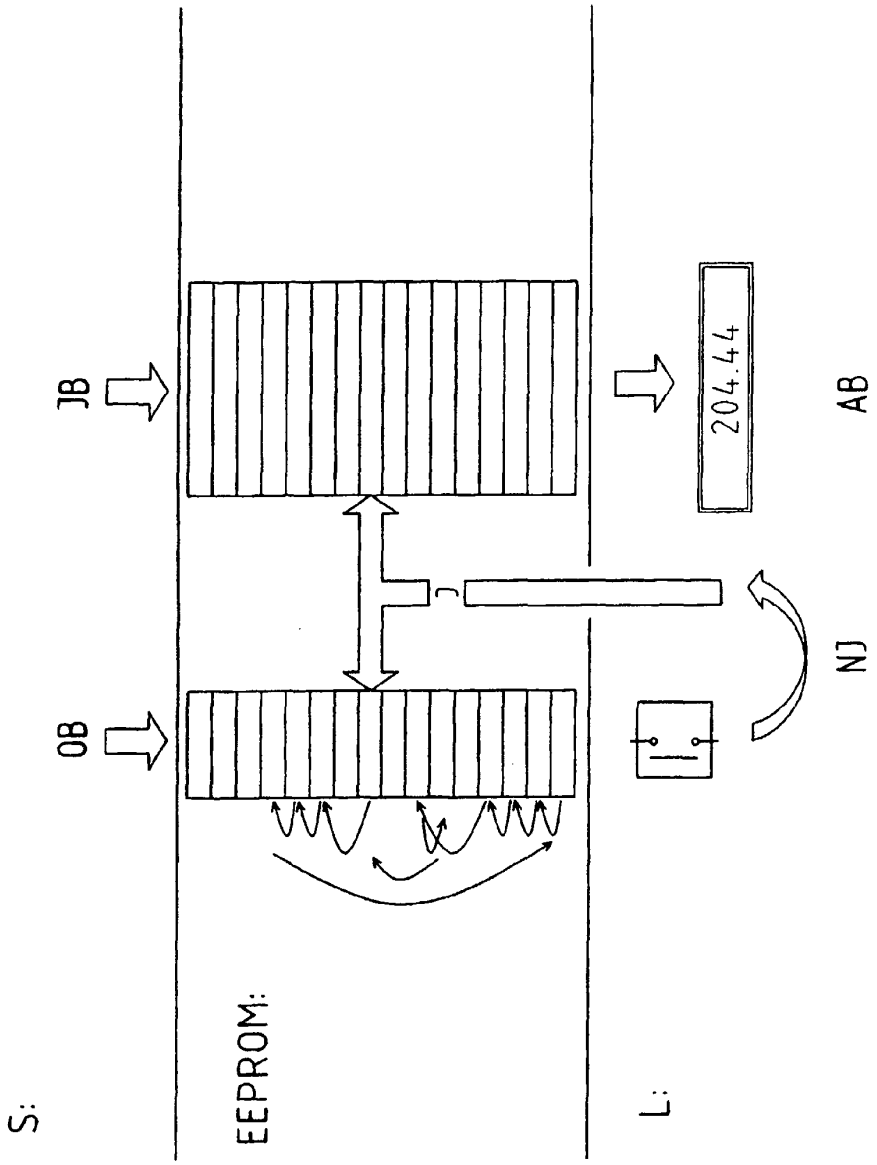

FIG.4

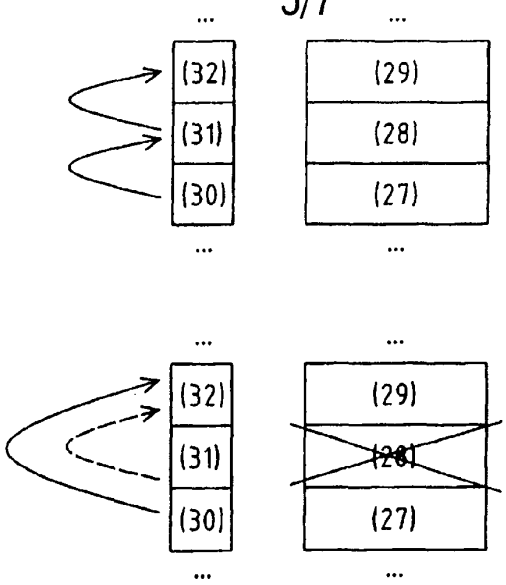
(32)
(31)
(30)
(29)
(28)
(27)
(32)
(31)
(30)
(29)
(28)
(27)

FIG.5

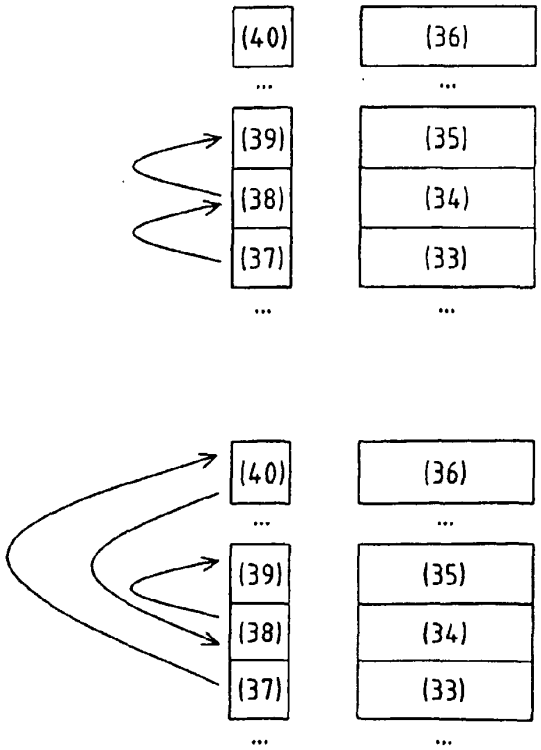
(40)
(39)
(38)
(37)
(36)
(35)
(34)
(33)
(40)
(39)
(38)
(37)
(36)
(35)
(34)
(33)

FIG.6

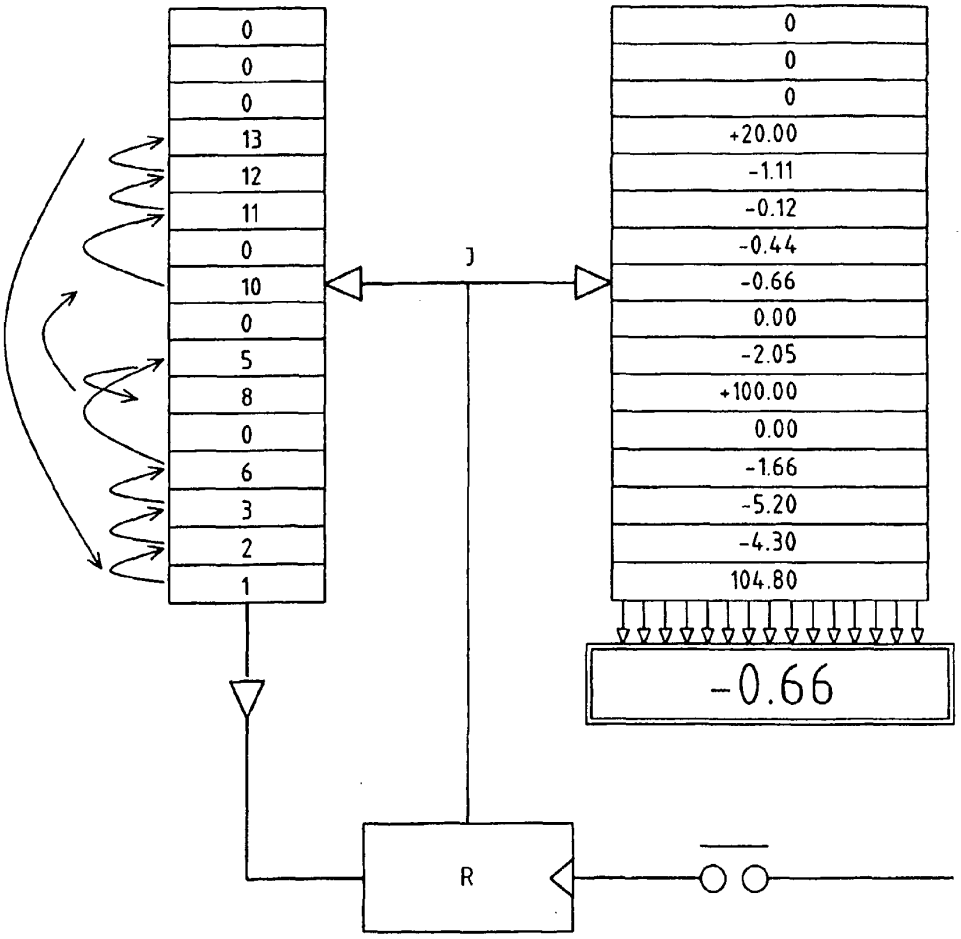
0
0
0
13
12
11
0
10
0
5
8
0
6
3
2
1
J
0
0
0
+20.00
-1.11
-0.12
-0.44
-0.66
0.00
-2.05
+100.00
0.00
-1.66
-5.20
-4.30
104.80
-0.66
R

FIG.7

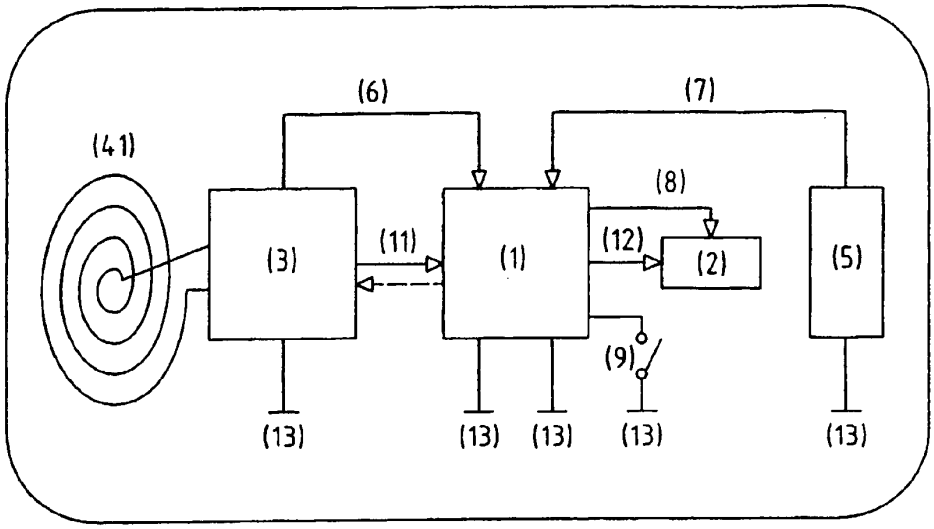
(6)
(7)
(41)
(8)
(11)
(12)
(3)
(1)
(2)
(5)
(9)
(13)
(13)
(13)
(13)
(13)

FIG.8

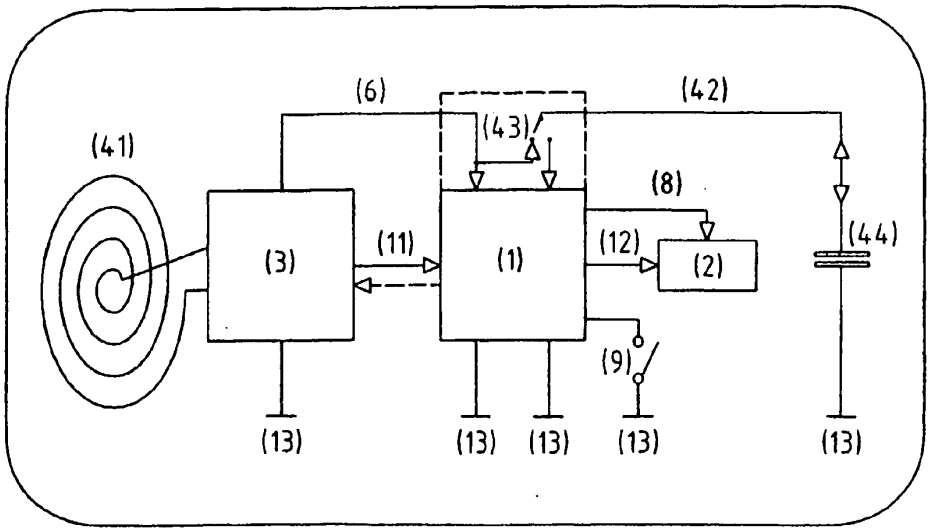
(6)
(42)
(43)
(41)
(8)
(44)
(11)
(12)
(3)
(1)
(2)
(9)
(13)
(13)
(13)
(13)
(13)

FIG.9

INTERNATIONAL SEARCH REPORT

Intern[redacted] Application No
PCT/IB 02/03867

A. CLASSIFICATION OF SUBJECT MATTER
IPC 7 G06K19/077

According to International Patent Classification (IPC) or to both national classification and IPC

B. FIELDS SEARCHED

Minimum documentation searched (classification system followed by classification symbols)
IPC 7 G06K H04M

Documentation searched other than minimum documentation to the extent that such documents are included in the fields searched

Electronic data base consulted during the international search (name of data base and, where practical, search terms used)

EPO-Internal, PAJ, WPI Data

C. DOCUMENTS CONSIDERED TO BE RELEVANT

Category °	Citation of document, with indication, where appropriate, of the relevant passages	Relevant to claim No.
A	WO 01 18747 A (COOREMAN PASCAL ;GEMPLUS CARD INT (FR)) 15 March 2001 (2001-03-15) page 6, line 20 -page 7, line 25 figure 1 ---	1,13
A	US 5 278 673 A (BRANCHEAU JAMES E ET AL) 11 January 1994 (1994-01-11) the whole document ---	1,13
A	US 5 627 355 A (BROWN JOHN ET AL) 6 May 1997 (1997-05-06) the whole document -----	1,13

[ ] Further documents are listed in the continuation of box C.

[X] Patent family members are listed in annex.

° Special categories of cited documents:

"A" document defining the general state of the art which is not considered to be of particular relevance
"E" earlier document but published on or after the international filing date
"L" document which may throw doubts on priority claim(s) or which is cited to establish the publication date of another citation or other special reason (as specified)
"O" document referring to an oral disclosure, use, exhibition or other means
"P" document published prior to the international filing date but later than the priority date claimed

"T" later document published after the international filing date or priority date and not in conflict with the application but cited to understand the principle or theory underlying the invention
"X" document of particular relevance; the claimed invention cannot be considered novel or cannot be considered to involve an inventive step when the document is taken alone
"Y" document of particular relevance; the claimed invention cannot be considered to involve an inventive step when the document is combined with one or more other such documents, such combination being obvious to a person skilled in the art.
"&" document member of the same patent family

Date of the actual completion of the international search	Date of mailing of the international search report
9 December 2002	16/12/2002

Name and mailing address of the ISA	Authorized officer
European Patent Office, P.B. 5818 Patentlaan 2 NL - 2280 HV Rijswijk Tel. (+31-70) 340-2040, Tx. 31 651 epo nl, Fax: (+31-70) 340-3016	de Ronde, J.

Form PCT/ISA/210 (second sheet) (July 1992)

INTERNATIONAL SEARCH REPORT

Information on patent family members

Intern[redacted] Application No
PCT/IB 02/03867

Patent document cited in search report		Publication date	Patent family member(s)			Publication date
WO 0118747	A	15-03-2001	FR	2798212	A1	09-03-2001
			AU	7297300	A	10-04-2001
			CN	1382287	T	27-11-2002
			EP	1214686	A1	19-06-2002
			WO	0118747	A1	15-03-2001
US 5278673	A	11-01-1994	NONE			
US 5627355	A	06-05-1997	US	5478994	A	26-12-1995

Form PCT/ISA/210 (patent family annex) (July 1992)

UNITED STATES PATENT AND TRADEMARK OFFICE

UNITED STATES DEPARTMENT OF COMMERCE
United States Patent and Trademark Office
Address: COMMISSIONER FOR PATENTS
P.O. Box 1450
Alexandria, Virginia 22313-1450
www.uspto.gov

APPLICATION NUMBER	FILING OR 371(c) DATE	FIRST NAMED APPLICANT	ATTY. DOCKET NO./TITLE
10/552,912	02/27/2006	Joel Gaillard	1-37992

CONFIRMATION NO. 6905

43935
FRASER MARTIN & MILLER LLC
28366 KENSINGTON LANE
PERRYSBURG, OH43551

Title: Portable electronic device capable of alternate data conveyance operations responsive to an invariable activation command

Publication No. US-2006-0262035-A1
Publication Date: 11/23/2006

NOTICE OF PUBLICATION OF APPLICATION

The above-identified application will be electronically published as a patent application publication pursuant to 37 CFR 1.211, et seq. The patent application publication number and publication date are set forth above.

The publication may be accessed through the USPTO's publically available Searchable Databases via the Internet at www.uspto.gov. The direct link to access the publication is currently http://www.uspto.gov/patft/.

The publication process established by the Office does not provide for mailing a copy of the publication to applicant. A copy of the publication may be obtained from the Office upon payment of the appropriate fee set forth in 37 CFR 1.19(a)(1). Orders for copies of patent application publications are handled by the USPTO's Office of Public Records. The Office of Public Records can be reached by telephone at (703) 308-9726 or (800) 972-6382, by facsimile at (703) 305-8759, by mail addressed to the United States Patent and Trademark Office, Office of Public Records, Alexandria, VA 22313-1450 or via the Internet.

In addition, information on the status of the application, including the mailing date of Office actions and the dates of receipt of correspondence filed in the Office, may also be accessed via the Internet through the Patent Electronic Business Center at www.uspto.gov using the public side of the Patent Application Information and Retrieval (PAIR) system. The direct link to access this status information is currently http://pair.uspto.gov/. Prior to publication, such status information is confidential and may only be obtained by applicant using the private side of PAIR.

Further assistance in electronically accessing the publication, or about PAIR, is available by calling the Patent Electronic Business Center at 703-305-3028.

Pre-Grant Publication Division, 703-605-4283

Law Offices Of
FRASER MARTIN & MILLER LLC
Intellectual Property and Technology Law

Donald R. Fraser
Richard G. Martin
J. Douglas Miller

28366 Kensington Lane
Perrysburg, Ohio 43551-4163
Telephone: (419) 874-1100
Facsimile: (419) 874-1130
e-mail: fraser@fraser-ip.com

Bradley T. Ligibel
Michael E. Dockins*

*Also Admitted in Indiana

RECEIVED
25 AUG 2006
Legal Staff
International Division

August 25, 2006

PCT Legal Office
Commissioner for Patents
P.O. Box 1450
Alexandria, VA 22313-1450

VIA FACSIMILE 571-273-0459

Re: U.S. Patent Application Serial No. 10/552,912
Based on International PCT Patent Application No. PCT/IB2003/001523
PORTABLE ELECTRONIC DEVICE CAPABLE OF ALTERNATE DATA CONVEYANCE OPERATIONS RESPONSIVE TO AN INVARIABLE ACTIVATION COMMAND
Applicant: G. Holdings, Ltd.
Attorney Docket: 1-37992

To Whom It May Concern:

The Official Filing Receipt, Confirmation No. 6905, mailed on August 14, 2006, issued in the above identified patent application, contains incorrect information. Information was incorrectly stated under Assignment for Published Patent Application as Universal Bio Research Co., Ltd., Matsudo, Chiba, JAPAN. Attached is a copy of the official Filing Receipt received by the applicant.

Please correct to read:

Assignment for Published Patent Application
G. Holdings Ltd., Nassau NP, Bahamas

Thank you.

Sincerely,

DRF/ms

UNITED STATES PATENT AND TRADEMARK OFFICE

UNITED STATES DEPARTMENT OF COMMERCE
United States Patent and Trademark Office
Address: COMMISSIONER FOR PATENTS
P.O. Box 1450
Alexandria, Virginia 22313-1450
www.uspto.gov

APPL NO.	FILING OR 371 (c) DATE	ART UNIT	FIL FEE REC'D	ATTY.DOCKET NO	DRAWINGS	TOT CLMS	IND CLMS
10/552,912	02/27/2006	2871	615	1-37992	3	14	4

CONFIRMATION NO. 6905

43935
FRASER MARTIN & MILLER LLC
28366 KENSINGTON LANE
PERRYSBURG, OH 43551

AUG 18 2006

FILING RECEIPT

OC000000020006733

Date Mailed: 08/14/2006

Receipt is acknowledged of this regular Patent Application. It will be considered in its order and you will be notified as to the results of the examination. Be sure to provide the U.S. APPLICATION NUMBER, FILING DATE, NAME OF APPLICANT, and TITLE OF INVENTION when inquiring about this application. Fees transmitted by check or draft are subject to collection. Please verify the accuracy of the data presented on this receipt. **If an error is noted on this Filing Receipt, please mail to the Commissioner for Patents P.O. Box 1450 Alexandria Va 22313-1450. Please provide a copy of this Filing Receipt with the changes noted thereon. If you received a "Notice to File Missing Parts" for this application, please submit any corrections to this Filing Receipt with your reply to the Notice. When the USPTO processes the reply to the Notice, the USPTO will generate another Filing Receipt incorporating the requested corrections (if appropriate).**

Applicant(s)

Joel Gaillard, Nassau, BAHAMAS;

Assignment For Published Patent Application

Universal Bio Research Co., Ltd., Matsudo, Chiba, JAPAN

Power of Attorney: The patent practitioners associated with Customer Number **43935**.

Domestic Priority data as claimed by applicant

This application is a 371 of PCT/IB03/01523 04/14/2003

Foreign Applications

If Required, Foreign Filing License Granted: 08/12/2006

The country code and number of your priority application, to be used for filing abroad under the Paris Convention, is US10/552,912

Projected Publication Date: 11/23/2006

Non-Publication Request: No

Early Publication Request: No

**** SMALL ENTITY ****

Title

Portable electronic device capable of alternate data conveyance operations responsive to an invariable activation command

Preliminary Class

349

PROTECTING YOUR INVENTION OUTSIDE THE UNITED STATES

Since the rights granted by a U.S. patent extend only throughout the territory of the United States and have no effect in a foreign country, an inventor who wishes patent protection in another country must apply for a patent in a specific country or in regional patent offices. Applicants may wish to consider the filing of an international application under the Patent Cooperation Treaty (PCT). An international (PCT) application generally has the same effect as a regular national patent application in each PCT-member country. The PCT process **simplifies** the filing of patent applications on the same invention in member countries, but **does not result** in a grant of "an international patent" and does not eliminate the need of applicants to file additional documents and fees in countries where patent protection is desired.

Almost every country has its own patent law, and a person desiring a patent in a particular country must make an application for patent in that country in accordance with its particular laws. Since the laws of many countries differ in various respects from the patent law of the United States, applicants are advised to seek guidance from specific foreign countries to ensure that patent rights are not lost prematurely.

Applicants also are advised that in the case of inventions made in the United States, the Director of the USPTO must issue a license before applicants can apply for a patent in a foreign country. The filing of a U.S. patent application serves as a request for a foreign filing license. The application's filing receipt contains further information and guidance as to the status of applicant's license for foreign filing.

Applicants may wish to consult the USPTO booklet, "General Information Concerning Patents" (specifically, the section entitled "Treaties and Foreign Patents") for more information on timeframes and deadlines for filing foreign patent applications. The guide is available either by contacting the USPTO Contact Center at 800-786-9199, or it can be viewed on the USPTO website at http://www.uspto.gov/web/offices/pac/doc/general/index.html.

For information on preventing theft of your intellectual property (patents, trademarks and copyrights), you may wish to consult the U.S. Government website, http://www.stopfakes.gov. Part of a Department of Commerce initiative, this website includes self-help "toolkits" giving innovators guidance on how to protect intellectual property in specific countries such as China, Korea and Mexico. For questions regarding patent enforcement issues, applicants may call the U.S. Government hotline at 1-866-999-HALT (1-866-999-4158).

LICENSE FOR FOREIGN FILING UNDER
Title 35, United States Code, Section 184
Title 37, Code of Federal Regulations, 5.11 & 5.15

GRANTED

The applicant has been granted a license under 35 U.S.C. 184, if the phrase "IF REQUIRED, FOREIGN FILING LICENSE GRANTED" followed by a date appears on this form. Such licenses are issued in all applications where the conditions for issuance of a license have been met, regardless of whether or not a license may be required as set forth in 37 CFR 5.15. The scope and limitations of this license are set forth in 37 CFR 5.15(a) unless an earlier license has been issued under 37 CFR 5.15(b). The license is subject to revocation upon written notification. The date indicated is the effective date of the license, unless an earlier license of similar scope has been granted under 37 CFR 5.13 or 5.14.

This license is to be retained by the licensee and may be used at any time on or after the effective date thereof unless it is revoked. This license is automatically transferred to any related applications(s) filed under 37 CFR 1.53(d). This license is not retroactive.

The grant of a license does not in any way lessen the responsibility of a licensee for the security of the subject matter as imposed by any Government contract or the provisions of existing laws relating to espionage and the national security or the export of technical data. Licensees should apprise themselves of current regulations especially with respect to certain countries, of other agencies, particularly the Office of Defense Trade Controls, Department of State (with respect to Arms, Munitions and Implements of War (22 CFR 121-128)); the Bureau of Industry and Security, Department of Commerce (15 CFR parts 730-774); the Office of Foreign Assets Control, Department of Treasury (31 CFR Parts 500+) and the Department of Energy.

NOT GRANTED

No license under 35 U.S.C. 184 has been granted at this time, if the phrase "IF REQUIRED, FOREIGN FILING LICENSE GRANTED" DOES NOT appear on this form. Applicant may still petition for a license under 37 CFR 5.12, if a license is desired before the expiration of 6 months from the filing date of the application. If 6 months has lapsed from the filing date of this application and the licensee has not received any indication of a secrecy order under 35 U.S.C. 181, the licensee may foreign file the application pursuant to 37 CFR 5.15(b).

****
*** RX REPORT ***
****

RECEPTION OK

TX/RX NO	6428
RECIPIENT ADDRESS	
DESTINATION ID	
ST. TIME	08/25 14:12
TIME USE	00'48
PGS.	4
RESULT	OK

UNITED STATES PATENT AND TRADEMARK OFFICE

UNITED STATES DEPARTMENT OF COMMERCE
United States Patent and Trademark Office
Address: COMMISSIONER FOR PATENTS
P.O. Box 1450
Alexandria, Virginia 22313-1450
www.uspto.gov

U.S. APPLICATION NUMBER NO.	FIRST NAMED APPLICANT	ATTY. DOCKET NO.
10/552,912	Joel Gaillard	1-37992

INTERNATIONAL APPLICATION NO.	
PCT/IB03/01523	
I.A. FILING DATE	PRIORITY DATE
04/14/2003	

43935
FRASER MARTIN & MILLER LLC
28366 KENSINGTON LANE
PERRYSBURG, OH 43551

CONFIRMATION NO. 6905

371 ACCEPTANCE LETTER

OC000000020006734

Date Mailed: 08/14/2006

NOTICE OF ACCEPTANCE OF APPLICATION UNDER 35 U.S.C 371 AND 37 CFR 1.495

The applicant is hereby advised that the United States Patent and Trademark Office in its capacity as a Designated / Elected Office (37 CFR 1.495), has determined that the above identified international application has met the requirements of 35 U.S.C. 371, and is ACCEPTED for national patentability examination in the United States Patent and Trademark Office.

The United States Application Number assigned to the application is shown above and the relevant dates are:

02/27/2006	02/27/2006
DATE OF RECEIPT OF 35 U.S.C. 371(c)(1), (c)(2) and (c)(4) REQUIREMENTS	DATE OF COMPLETION OF ALL 35 U.S.C. 371 REQUIREMENTS

A Filing Receipt (PTO-103X) will be issued for the present application in due course. **THE DATE APPEARING ON THE FILING RECEIPT AS THE " FILING DATE" IS THE DATE ON WHICH THE LAST OF THE 35 U.S.C. 371 (c)(1), (c)(2) and (c)(4) REQUIREMENTS HAS BEEN RECEIVED IN THE OFFICE. THIS DATE IS SHOWN ABOVE.** *The filing date of the above identified application is the international filing date of the international application (Article 11(3) and 35 U.S.C. 363).* Once the Filing Receipt has been received, send all correspondence to the Group Art Unit designated thereon.

The following items have been received:

- Indication of Small Entity Status
- Copy of the International Application filed on 10/13/2005
- Copy of the International Search Report filed on 10/13/2005
- Copy of IPE Report filed on 10/13/2005
- Copy of Annexes to the IPER filed on 10/13/2005
- Information Disclosure Statements filed on 10/13/2005
- Oath or Declaration filed on 02/27/2006
- U.S. Basic National Fees filed on 10/13/2005

Applicant is reminded that any communications to the United States Patent and Trademark Office must be mailed to the address given in the heading and include the U.S. application no. shown above (37 CFR 1.5)

KAREN M WILLIAMS
Telephone: (703) 308-9140 EXT 213

PART 3 - OFFICE COPY

FORM PCT/DO/EO/903 (371 Acceptance Notice)

UNITED STATES NATIONAL STAGE SHEET (DO/EO)
Karen Williams, Paralegal

PUBLICATION NO. WO 04/090805

PUBLICATION DATE 21 OCT 04

U. S. APPL. NO. 10/552912

INTERNATIONAL APPL. IB03/01523

Application Filed By: 30 MOS

International Application ✓ **Translation** ___ **Defective** ___ **Reason** ___

WIPO Designated EP **Elected** EP **IA Language** ENGLISH

Copy of Search Report (ISR) ✓ **Article 33** ___ **Article 19** ___

371 Filing fees ✓ **paid** ___ **insufficient**

Total Claims 14 **Chargeable** 14 **Independent** 4 **Multiple** N

Total Drawing Sheets 3 **Defective** ___ **Reason** ___

Oath/Declaration needed ✓ **signed** 27 FEB 06 **defective** ___ **Reason** ___

Small entity ✓ **Large entity** ___ **Small entity statement** ___

Biochemical Seq. Diskette ___ **needed** ___ **damaged** ___ **entered** ___ **not entered** ___

Biochemical Sequence listing ___ **needed** ___ **statement** ___ **no statement** ___

Copy of References Cited in ISR ___ **IB/331** ___

Copy of IPER ✓ **Annexes** ✓ **entered** ✓ **not entered** ___ **Reason** ___

Preliminary Amendments ___ **entered** ___ **not entered Reason** ___

Information Disclosure Statement ✓ **Request for Immediate Examination** ___

Substitute Specification ___ **Assignment** ___ **Priority document** ___

Power of Attorney ___ **Data Sheet** ✓ **RO/101** ___ **PCT Easy** ___

Other papers WRITTEN OPINION 13 OCT 05

35 USC Receipt of Request 13 OCT 05
Date completion USC 371 Requirements 27 FEB 06
Notice of Missing Requirements 18 JAN 06
Notice of Defective ___ **Response** ___ **Translation** ___ **Declaration** ___ **Disk** ___
Notice of Acceptance 11 AUG 06
Notice of Abandonment ___
Notice of Missing Sequence ___

BEST AVAILABLE COPY

27 FEB 2006

I hereby certify that this correspondence is being deposited with the United States Postal Service as first class mail in an envelope addressed to: Commissioner for Patents, P.O. Box 1450, Alexandria, VA 22313-1450 on February 24, 2006

Martha S. Sloan

Martha S. Sloan
(signature)

February 24, 2006
(date of signature)

OIPE IAP75 FEB 27 2006 PATENT & TRADEMARK OFFICE

IN THE UNITED STATES PATENT AND TRADEMARK OFFICE

In re Application of: Joel Gaillard	)	Group Art Unit:
Serial No. 10/552,912	)	
Filed: October 13, 2005	)	Attorney Docket: 1-37992
For: PORTABLE ELECTRONIC DEVICE CAPABLE OF ALTERNATE DATA CONVEYANCE OPERATIONS RESPONSIVE TO AN INVARIABLE ACTIVATION COMMAND	)	

February 24, 2006

Mail Stop Missing Parts
Commissioner for Patents
P. O. Box 1450
Alexandria VA 22313-1450

Honorable Sir:

RESPONSE TO NOTIFICATION OF MISSING REQUIREMENTS UNDER 35 U.S.C. 371

In response to a Notification of Missing Requirements Under 35 U.S.C. 371 dated January 19, 2006, the applicant herein submits a fully executed Declaration and Power of

Attorney and a copy of the United States Patent and Trademark Office Notification of Missing Requirements.

Please charge the oath or declaration surcharge of $65.00 for small entity to Deposit Account No. 50-3156, pursuant to 37 CFR 1.16(e). A duplicate of this paper is enclosed for this purpose.

Respectfully submitted,

03/07/2006 ATRAN1 00000138 503156 10552912
01 FC:2617 65.00 DA

Donald R. Fraser
Registration No. 17,919

Law Offices of Fraser Martin & Miller LLC
132 West Second Street
Perrysburg OH 43551-1401
(419) 874-1100

PCT/$

UNITED STATES PATENT AND TRADEMARK OFFICE

OIPE
FEB 2 7 2006
PATENT & TRADEMARK OFFICE

UNITED STATES DEPARTMENT OF COMMERCE
United States Patent and Trademark Office
Address: COMMISSIONER FOR PATENTS
P.O. Box 1450
Alexandria, Virginia 22313-1450
www.uspto.gov

U.S. APPLICATION NUMBER NO.	FIRST NAMED APPLICANT	ATTY. DOCKET NO.
10/552,912	Joel Gaillard	1-37992

INTERNATIONAL APPLICATION NO.
PCT/IB03/01523

I.A. FILING DATE	PRIORITY DATE
04/14/2003	

43935
FRASER MARTIN & MILLER LLC
132 WEST SECOND STREET
PERRYSBURG, OH 43551

CONFIRMATION NO. 6905
371 FORMALITIES LETTER

OC000000017865058

Date Mailed: 01/19/2006

NOTIFICATION OF MISSING REQUIREMENTS UNDER 35 U.S.C. 371 IN THE UNITED STATES DESIGNATED/ELECTED OFFICE (DO/EO/US)

The following items have been submitted by the applicant or the IB to the United States Patent and Trademark Office as a Designated / Elected Office (37 CFR 1.495).

- Indication of Small Entity Status
- Copy of the International Application filed on 10/13/2005
- Copy of the International Search Report filed on 10/13/2005
- Copy of IPE Report filed on 10/13/2005
- Copy of Annexes to the IPER filed on 10/13/2005
- Information Disclosure Statements filed on 10/13/2005
- U.S. Basic National Fees filed on 10/13/2005

The applicant needs to satisfy supplemental fees problems indicated below.

The following items **MUST** be furnished within the period set forth below in order to complete the requirements for acceptance under 35 U.S.C. 371:

- Oath or declaration of the inventors, in compliance with 37 CFR 1.497(a) and (b), identifying the application by the International application number and international filing date.

- To avoid abandonment, a surcharge (for late submission of filing fee, search fee, examination fee or oath or declaration) as set forth in 37 CFR 1.492(h) of $65 for a small entity in compliance with 37 CFR 1.27, must be submitted with the missing items identified in this letter.

SUMMARY OF FEES DUE:

Total additional fees required for this application is **$65** for a Small Entity:

- **$65** Surcharge.

JAN 2 1 2006

ALL OF THE ITEMS SET FORTH ABOVE MUST BE SUBMITTED WITHIN TWO (2) MONTHS FROM THE DATE OF THIS NOTICE OR BY 32 MONTHS FROM THE PRIORITY DATE FOR THE APPLICATION, WHICHEVER IS LATER. FAILURE TO PROPERLY RESPOND WILL RESULT IN ABANDONMENT.

The time period set above may be extended by filing a petition and fee for extension of time under the provisions of 37 CFR 1.136(a).

Applicant is reminded that any communications to the United States Patent and Trademark Office must be mailed to the address given in the heading and include the U.S. application no. shown above (37 CFR 1.5)

*A copy of this notice **MUST** be returned with the response.*

KAREN M WILLIAMS

Telephone: (703) 308-9140 EXT 213

PART 1 - ATTORNEY/APPLICANT COPY

U.S. APPLICATION NUMBER NO.	INTERNATIONAL APPLICATION NO.	ATTY. DOCKET NO.
10/552,912	PCT/IB03/01523	1-37992

FORM PCT/DO/EO/905 (371 Formalities Notice)

B

DECLARATION AND POWER OF ATTORNEY FOR PATENT APPLICATION
DECLARATION POUR DEMANDES DE BREVETS AVEC POUVOIRS

FRENCH LANGUAGE DECLARATION
form PTO/SB/105 (2-98)

En tant qu'inventeur nommé ci-après, je déclare par les présentes que mon nom, mon domicile, mon adresse postale et ma nationalité sont ceux qui figurent ci-après. Je déclare que je crois être l'inventeur original, premier et unique (si un seul nom figure sur le présent acte) ou un des co-inventeurs, originaux et premiers (si plusieurs noms figurent sur le présent acte) du sujet revendiqué et pour lequel un brevet est demandé sur la base de l'invention intitulée :

As a below-named inventor, I hereby declare that my residence, post office address and citizenship are as stated below next to my name. I believe I am the original, first and sole inventor (if only one name is listed below) or an original, first and joint inventor (if plural names are listed below) of the subject matter which is claimed and for which a patent is sought on the invention entitled :

PORTABLE ELECTRONIC DEVICE CAPABLE OF ALTERNATE DATA CONVEYANCE OPERATIONS RESPONSIVE TO AN INVARIABLE ACTIVATION COMMAND

et dont la description est fournie ci-joint à moins que la case suivante n'ait été cochée:

the specification of which is attached hereto unless the following box is checked:

☐ a été déposée :
- Demande de brevet No. :
- Date de dépôt :

☐ was filed:
- Patent application No.:
- Filing date:

Je déclare par les présentes avoir examiné et compris le contenu de la description identifiée ci-dessus, revendications y compris, et le cas échéant telle que modifiée par un amendement.

I hereby state that I have reviewed and understand the contents of the above identified specification, including the claims, as amended by any amendment referred to above.

Je reconnais le devoir de divulguer toute information qui soit en rapport avec l'examen de cette demande selon le titre 37 de la Codification des Règlements Fédéraux § 1.56(a).

I acknowledge the duty to disclose information which is material to the examination of this application in accordance with Title 37, Code of Federal Regulations, § 1.56(a).

Je revendique par le présent acte avoir la priorité étrangère, en vertu du Titre 35, § 119(a)-(d) ou § 365(b) du Code des États-unis, sur **toute demande étrangère de brevet ou certificat d'inventeur** ou, en vertu du Titre 35, § 365(a) du même Code, sur **toute demande internationale PCT désignant au moins un pays autre que les États-unis** et figurant ci-dessous :

I hereby claim foreign priority under Title 35, United States Code, § 119(a)-(d) or § 365 (b) of **any foreign application(s) for patent or inventor's certificate**, or § 365(a) of **any PCT International application which designated at least one country other than the United States**, listed below:

Demande(s) de brevet antérieure(s) :
Prior application(s):

- No. de la demande/*Application number* :
- Pays/*Country* :
- Date de dépôt/*Filing date* : (AAAA-MM-JJ) / *(YYYY-MM-DD)*

- No. de la demande/*Application number* :
- Pays/*Country* :
- Date de dépôt/*Filing date* : (AAAA-MM-JJ) / *(YYYY-MM-DD)*

Je revendique par le présent acte tout bénéfice, en vertu du Titre 35, § 119(e) du Code des États-unis, de **toute demande de brevet provisoire effectuée aux États-unis** et figurant ci-dessous.

I hereby claim the benefit under Title 35, United States Code, §119(e) of **any United States provisional application(s)** listed below.

- Demande No./*Application No.* :
- Date de depot/*Filing date* : (AAAA-MM-JJ) / *(YYYY-MM-DD)*

- Demande No./*Application No.* :
- Date de depot/*Filing date* : (AAAA-MM-JJ) / *(YYYY-MM-DD)*

Je revendique par le présent acte tout bénéfice, en vertu du Titre 35, § 120 du Code des États-unis, de **toute demande de brevet effectuée aux États-Unis**, ou en vertu du Titre 35, § 365(c) du même Code, de **toute demande internationale PCT désignant les États-unis** et figurant ci-dessous et, **dans la mesure où l'objet de chacune des revendications de cette demande de brevet n'est pas divulgué dans la demande antérieure américaine ou internationale PCT**, en vertu des dispositions du premier paragraphe du Titre 35, § 112 du Code des États-unis, je reconnais devoir divulguer toute information pertinente à la brevetabilité, comme défini dans le Titre 37, § 1.56 du Code fédéral des réglementations, dont j'ai pu disposer entre la date de dépôt de la demande antérieure et la date de dépôt de la demande nationale ou internationale PCT de la présente demande :

I hereby claim the benefit under Title 35, United States Code, § 120 of **any United States application(s)**, or § 365(c) of **any PCT International application designating the United States**, listed below and, **insofar as the subject matter of each of the claims of this application is not disclosed in the prior United States or PCT International application** in the manner provided by the first paragraph of Title 35, United States Code, § 112, I acknowledge the duty to disclose information which is material to patentability as defined in Title 37, Code of Federal Regulations, § 1.56 which became available between the filing date of the prior application and the national or PCT International filing date of this application:

- No. de la demande/*Application number* : **PCT/IB2003/001523**
- Date de dépôt/*Filing date* : 2003-04-14 (AAAA-MM-JJ) / *(YYYY-MM-DD)*
- État de la demande/*Application status* : en instance/pending

- No. de la demande/*Application number* :
- Date de dépôt/*Filing date* : (AAAA-MM-JJ) / *(YYYY-MM-DD)*
- État de la demande/*Application status* :

Je déclare par le présent acte que toute déclaration ci-incluse est, à ma connaissance, véridique et que toute déclaration formulée à partir de renseignements ou de suppositions est tenue pour véridique; et de plus, que toutes ces déclarations ont été formulées en sachant que toute fausse déclaration volontaire ou son équivalent est passible d'une amende ou d'une incarcération, ou des deux, en vertu de la Section 1001 du Titre 18 du Code des États-unis, et que de telles déclarations volontairement fausses risquent de compromettre la validité de la demande de brevet ou du brevet délivré à partir de celle-ci.

I hereby declare that all statements made herein of my own knowledge are true and that all statements made on information and belief are believed to be true; and further that these statements were made with the knowledge that willful false statements and the like so made are punishable by fine or imprisonment, or both, under Section 1001 of Title 18 of the United States Code and that such willful false statements may jeopardize the validity of the application or any patent issued thereon.

POUVOIR

En tant qu'inventeur, je désigne les agents de brevets suivants pour poursuivre la procédure de cette demande et traiter toute affaire la concernant par devant le bureau des brevets et marques:

James D. MILLER
Reg. N° 46,932

J. Matthew BUCHANAN
Reg. N° 47,459

Donald FRASER
Reg. N° 17,919

Adresse postale :
Donald FRASER
FRASER, MARTIN, BUCHANAN, MILLER, LLC.
132 West Second Street
Perrysburg Ohio 43551-1401
United States of America

Phone: (419) 874-1100
Fax: (419) 874-1130
Je nomme également comme représentant pour signification aux fins de recevoir tout avis affectant le brevet ou les droits en découlant :

James D. MILLER, J. Matthew BUCHANAN, Donald FRASER of the firm of FRASER, MARTIN, BUCHANAN, MILLER, LLC.
132 West Second Street
Perrysburg Ohio 43551-1401
United States of America

Nom complet du **seul** ou **premier** inventeur:

Signature de l'inventeur :

Date : _____

Domicile :
Citoyenneté :
Adresse postale :

POWER OF ATTORNEY

As a named inventor, I hereby appoint the following patent agents to prosecute this application and transact all business in the Patent and Trademark Office connected therewith:

James D. MILLER
Reg. N° 46,932

J. Matthew BUCHANAN
Reg. N° 47,459

Donald FRASER
Reg. N° 17,919

Send correspondence to:
Donald FRASER
FRASER, MARTIN, BUCHANAN, MILLER, LLC.
132 West Second Street
Perrysburg Ohio 43551-1401
United States of America

Phone: (419) 874-1100
Fax: (419) 874-1130
I further appoint as domestic representative to whom may be served process or notice of proceedings affecting the patent or rights thereunder:

James D. MILLER, J. Matthew BUCHANAN, Donald FRASER of the firm of FRASER, MARTIN, BUCHANAN, MILLER, LLC.
132 West Second Street
Perrysburg Ohio 43551-1401
United States of America

Full name of the **sole** or **first** inventor:

GAILLARD, Joël

Inventor's signature:

X _____

X Date: 30 SEPT 2005

Residence: Nassau BAHAMAS
Citizenship: French
Post office address: *1A Star Plaza, Mackey St. Nassau NP Bahamas P.O. BOX 19013*

UNITED STATES PATENT AND TRADEMARK OFFICE

UNITED STATES DEPARTMENT OF COMMERCE
United States Patent and Trademark Office
Address: COMMISSIONER FOR PATENTS
P.O. Box 1450
Alexandria, Virginia 22313-1450
www.uspto.gov

U.S. APPLICATION NUMBER NO.	FIRST NAMED APPLICANT	ATTY. DOCKET NO.
10/552,912	Joel Gaillard	1-37992

INTERNATIONAL APPLICATION NO.	
PCT/IB03/01523	
I.A. FILING DATE	PRIORITY DATE
04/14/2003	

43935
FRASER MARTIN & MILLER LLC
132 WEST SECOND STREET
PERRYSBURG, OH 43551

CONFIRMATION NO. 6905

371 FORMALITIES LETTER

OC000000017865058

Date Mailed: 01/19/2006

NOTIFICATION OF MISSING REQUIREMENTS UNDER 35 U.S.C. 371 IN THE UNITED STATES DESIGNATED/ELECTED OFFICE (DO/EO/US)

The following items have been submitted by the applicant or the IB to the United States Patent and Trademark Office as a Designated / Elected Office (37 CFR 1.495).

- Indication of Small Entity Status
- Copy of the International Application filed on 10/13/2005
- Copy of the International Search Report filed on 10/13/2005
- Copy of IPE Report filed on 10/13/2005
- Copy of Annexes to the IPER filed on 10/13/2005
- Information Disclosure Statements filed on 10/13/2005
- U.S. Basic National Fees filed on 10/13/2005

The applicant needs to satisfy supplemental fees problems indicated below.

The following items **MUST** be furnished within the period set forth below in order to complete the requirements for acceptance under 35 U.S.C. 371:

- Oath or declaration of the inventors, in compliance with 37 CFR 1.497(a) and (b), identifying the application by the International application number and international filing date.

- To avoid abandonment, a surcharge (for late submission of filing fee, search fee, examination fee or oath or declaration) as set forth in 37 CFR 1.492(h) of $65 for a small entity in compliance with 37 CFR 1.27, must be submitted with the missing items identified in this letter.

SUMMARY OF FEES DUE:

Total additional fees required for this application is **$65** for a Small Entity:

- **$65** Surcharge.

ALL OF THE ITEMS SET FORTH ABOVE MUST BE SUBMITTED WITHIN TWO (2) MONTHS FROM THE DATE OF THIS NOTICE OR BY 32 MONTHS FROM THE PRIORITY DATE FOR THE APPLICATION, WHICHEVER IS LATER. FAILURE TO PROPERLY RESPOND WILL RESULT IN ABANDONMENT.

The time period set above may be extended by filing a petition and fee for extension of time under the provisions of 37 CFR 1.136(a).

Applicant is reminded that any communications to the United States Patent and Trademark Office must be mailed to the address given in the heading and include the U.S. application no. shown above (37 CFR 1.5)

*A copy of this notice **MUST** be returned with the response.*

KAREN M WILLIAMS

Telephone: (703) 308-9140 EXT 213

PART 2 - OFFICE COPY

U.S. APPLICATION NUMBER NO.	INTERNATIONAL APPLICATION NO.	ATTY. DOCKET NO.
10/552,912	PCT/IB03/01523	1-37992

FORM PCT/DO/EO/905 (371 Formalities Notice)

JC03 Rec'd PCT/PTO 13 OCT 2005

PTO-1390 (Rev. 07-2005)
Approved for use through 3/31/2007. OMB 0651-0021
U.S. Patent and Trademark Office; U.S. DEPARTMENT OF COMMERCE
Under the Paperwork Reduction Act of 1995, no persons are required to respond to a collection of information unless it displays a valid OMB control number.

TRANSMITTAL LETTER TO THE UNITED STATES DESIGNATED/ELECTED OFFICE (DO/EO/US) CONCERNING A SUBMISSION UNDER 35 U.S.C. 371		ATTORNEY'S DOCKET NUMBER 1-37992 U.S. APPLICATION NO. (If known, see 37 CFR 1.5) 10/552912
INTERNATIONAL APPLICATION NO. PCT/IB2003/001523	INTERNATIONAL FILING DATE 14 April 2003	PRIORITY DATE CLAIMED 14 April 2003
TITLE OF INVENTION PORTABLE ELECTRONIC DEVICE CAPABLE OF ALTERNATE DATA CONVEYANCE OPERATIONS RESPONSIVE TO AN INVARIABLE ACTIVATION COMMAND		
APPLICANT(S) FOR DO/EO/US Joel Gaillard		

Applicant herewith submits to the United States Designated/Elected Office (DO/EO/US) the following items and other information:

1. [XX] This is a **FIRST** submission of items concerning a submission under 35 U.S.C. 371.
2. [ ] This is a **SECOND** or **SUBSEQUENT** submission of items concerning a submission under 35 U.S.C. 371.
3. [ ] This is an express request to begin national examination procedures (35 U.S.C. 371(f)). The submission must include items (5), (6), (9) and (21) indicated below.
4. [ ] The US has been elected (Article 31).
5. [X] A copy of the International Application as filed (35 U.S.C. 371(c)(2))
   a. [X] is attached hereto (required only if not communicated by the International Bureau).
   b. [ ] has been communicated by the International Bureau.
   c. [ ] is not required, as the application was filed in the United States Receiving Office (RO/US).
6. [ ] An English language translation of the International Application as filed (35 U.S.C. 371(c)(2)).
   a. [ ] is attached hereto.
   b. [ ] has been previously submitted under 35 U.S.C. 154(d)(4).
7. [ ] Amendments to the claims of the International Application under PCT Article 19 (35 U.S.C. 371(c)(3))
   a. [ ] are attached hereto (required only if not communicated by the International Bureau).
   b. [ ] have been communicated by the International Bureau.
   c. [ ] have not been made; however, the time limit for making such amendments has NOT expired.
   d. [ ] have not been made and will not be made.
8. [ ] An English language translation of the amendments to the claims under PCT Article 19 (35 U.S.C. 371(c)(3)).
9. [ ] An oath or declaration of the inventor(s) (35 U.S.C. 371(c)(4)).
10. [ ] An English language translation of the annexes of the International Preliminary Examination Report under PCT Article 36 (35 U.S.C. 371(c)(5)).

Items 11 to 20 below concern document(s) or information included:

11. [XX] An Information Disclosure Statement under 37 CFR 1.97 and 1.98.
12. [ ] An assignment document for recording. A separate cover sheet in compliance with 37 CFR 3.28 and 3.31 is included.
13. [ ] A preliminary amendment.
14. [XX] An Application Data Sheet under 37 CFR 1.76.
15. [ ] A substitute specification.
16. [ ] A power of attorney and/or change of address letter.
17. [ ] A computer-readable form of the sequence listing in accordance with PCT Rule 13*ter*.2 and 37 CFR 1.821- 1.825.
18. [ ] A second copy of the published International Application under 35 U.S.C. 154(d)(4).
19. [ ] A second copy of the English language translation of the international application under 35 U.S.C. 154(d)(4).

This collection of information is required by 37 CFR 1.414 and 1.491-1.492. The information is required to obtain or retain a benefit by the public, which is to file (and by the USPTO to process) an application. Confidentiality is governed by 35 U.S.C. 122 and 37 CFR 1.11 and 1.14. This collection is estimated to take 15 minutes to complete, including gathering information, preparing, and submitting the completed form to the USPTO. Time will vary depending upon the individual case. Any comments on the amount of time you require to complete this form and/or suggestions for reducing this burden, should be sent to the Chief Information Officer, U.S. Patent and Trademark Office, U.S. Department of Commerce, P.O. Box 1450, Alexandria, VA 22313-1450. DO NOT SEND FEES OR COMPLETED FORMS TO THIS ADDRESS. **SEND TO: Mail Stop PCT, Commissioner for Patents, P.O. Box 1450, Alexandria, VA 22313-1450.**

JC20 Rec'd PCT/PTO 13 OCT 2005

PTO-1390 (Rev. 07-2005)
Approved for use through 3/31/2007. OMB 0651-0021
U.S. Patent and Trademark Office; U.S. DEPARTMENT OF COMMERCE
Under the Paperwork Reduction Act of 1995, no persons are required to respond to a collection of information unless it displays a valid OMB control number.

U.S. APPLICATION NO. (if known, see 37 CFR 1.5)	INTERNATIONAL APPLICATION NO.	ATTORNEY'S DOCKET NUMBER
10/552912	PCT/IB2003/001523	1-37992

20. Other items or information: postcard; copy of International Search Report; copy of PCT Written Opinion; copy of Reply to Written Opinion including proposed Amended Claims; copy of International Preliminary Examination Report; Express Mail Certification;

The following fees have been submitted	CALCULATIONS	PTO USE ONLY
21. ☒ Basic national fee (37 CFR 1.492(a)) $300	$ 300.00	
22. ☒ Examination fee (37 CFR 1.492(c)) If the written opinion prepared by ISA/US or the international preliminary examination report prepared by IPEA/US indicates all claims satisfy provisions of PCT Article 33(1)-(4) ..... $0 All other situations $200	$ 200.00	
23. ☒ Search fee (37 CFR 1.492(b)) If the written opinion of the ISA/US or the International preliminary examination report prepared by IPEA/US indicates all claims satisfy provisions of PCT Article 33(1)-(4) ..... $0 Search fee (37 CFR 1.445(a)(2)) has been paid on the international application to the USPTO as an International Searching Authority ..... $100 International Search Report prepared by an ISA other than the US and provided to the Office or previously communicated to the US by the IB ..... $400 All other situations $500	$ 400.00	
TOTAL OF 21, 22 and 23 =	$ 900.00	
☐ Additional fee for specification and drawings filed in paper over 100 sheets (excluding sequence listing in compliance with 37 CFR 1.821(c) or (e) or computer program listing in an electronic medium) (37 CFR 1.492(j)). The fee is **$250** for each additional 50 sheets of paper or fraction thereof.		

Total Sheets	Extra Sheets	Number of each additional 50 or fraction thereof (round up to a whole number)	RATE	
- 100 =	/50 =		x $250	$

Surcharge of **$130.00** for furnishing any of the search fee, examination fee, or the oath or declaration after the date of commencement of the national stage (37 CFR 1.492(h)).	$	

CLAIMS	NUMBER FILED	NUMBER EXTRA	RATE	$	
Total claims	15 - 20 =		x $ 50	$	
Independent claims	4 - 3 =	1	x $200	$ 200.00	
MULTIPLE DEPENDENT CLAIM(S) (if applicable)			+ $360	$	
			TOTAL OF ABOVE CALCULATIONS =	$ 1,100.00	
☐ Applicant claims small entity status. See 37 CFR 1.27. Fees above are reduced by ½.					
			SUBTOTAL =	$ 550.00	
Processing fee of **$130.00** for furnishing the English translation later than 30 months from the earliest claimed priority date (37 CFR 1.492(i)). +				$	
			TOTAL NATIONAL FEE =	$ 550.00	
Fee for recording the enclosed assignment (37 CFR 1.21(h)). The assignment must be accompanied by an appropriate cover sheet (37 CFR 3.28, 3.31). **$40.00** per property +				$	
			TOTAL FEES ENCLOSED =	$ 550.00	
				Amount to be refunded:	$
				Amount to be charged	$

10/552912

JC20 Rec'd PCT/PTO 13 OCT 2005

PTO-1390 (Rev. 07-2005)
Approved for use through 3/31/2007. OMB 0651-0021
U.S. Patent and Trademark Office; U.S. DEPARTMENT OF COMMERCE
Under the Paperwork Reduction Act of 1995, no persons are required to respond to a collection of information unless it displays a valid OMB control number.

a. ☐ A check in the amount of $ _____ to cover the above fees is enclosed.

b. ☒ Please charge my Deposit Account No. 50-3156 in the amount of $ 550.00 to cover the above fees. A duplicate copy of this sheet is enclosed.

c. ☒ The Commissioner is hereby authorized to charge any additional fees which may be required, or credit any overpayment to Deposit Account No. 50-3156. A duplicate copy of this sheet is enclosed.

d. ☐ Fees are to be charged to a credit card. **WARNING:** Information on this form may become public. **Credit card information should not be included on this form.** Provide credit card information and authorization on PTO-2038.

NOTE: Where an appropriate time limit under 37 CFR 1.495 has not been met, a petition to revive (37 CFR 1.137(a) or (b)) must be filed and granted to restore the International Application to pending status.

SEND ALL CORRESPONDENCE TO:

43935

SIGNATURE

Donald R. Fraser
NAME

17,919
REGISTRATION NUMBER

JC20 Rec'd PCT/PTO 13 OCT 2005

CERTIFICATE OF MAILING BY "EXPRESS MAIL" (37 CFR 1.10) Applicant(s): G. Holdings Ltd.; Joel Gaillard			Docket No. 1-37992	
Application No. 10/552912	Filing Date	Examiner	Customer No. 43935	Group Art Unit

Invention: **PORTABLE ELECTRONIC DEVICE CAPABLE OF ALTERNATE DATA CONVEYANCE OPERATIONS RESPONSIVE TO AN INVARIABLE ACTIVATION COMMAND**

I hereby certify that the following correspondence:

Transmittal Letter to the United States Designated / Elected Office (DO/EO/US) Concerning a Submission Under 35 U.S.C. 371

(Identify type of correspondence)

is being deposited with the United States Postal Service "Express Mail Post Office to Addressee" service under 37 CFR 1.10 in an envelope addressed to: Commissioner for Patents, P.O. Box 1450, Alexandria, VA 22313-1450 on

October 13, 2005
(Date)

Martha S. Sloan
(Typed or Printed Name of Person Mailing Correspondence)

Martha S. Sloan
(Signature of Person Mailing Correspondence)

EV 701907277 US
("Express Mail" Mailing Label Number)

Note: Each paper must have its own certificate of mailing.

P06A/REV03

TITLE OF THE INVENTION : PORTABLE ELECTRONIC DEVICE CAPABLE OF ALTERNATE DATA CONVEYANCE OPERATIONS RESPONSIVE TO AN INVARIABLE ACTIVATION COMMAND

FIELD OF THE INVENTION

This invention relates to a portable electronic device capable of alternate data conveyance operations responsive to an invariable activation command.

BACKGROUND OF THE INVENTION

Conventional portable electronic or magnetic devices are used for many different applications. Such portable devices can be for example access devices such as keycards, identification devices, or credit or debit devices such as the so-called smart cards.

Electronic identification devices are widely used by banks, credit companies, stores, to allow automated monetary transactions without the assistance of a bank teller.

For conventional credit cards, a magnetic strip is encoded with a small amount of coded information identifying the cardholder, such as an identification code and a personal identification number (PIN). To access the information held by such cards after or during a transaction, a suitable transaction interface machine comprising an appropriate magnetic card reader is required. Transaction or other account-related information can be outputted on a display screen located on the transaction machine.

Some prior art identification or transaction cards incorporate greater storage capacity and data processing means in the form of a microchip carried by the plastic main body of a smart card. These smart cards can store more data than standard magnetic cards. These cards, however, still require the use of a card reader interface machine to access the information comprised thereon, and a supplementary screen on the interface machine is required to view their content.

Some prior art identification cards have been provided with an in-built display screen and an information decoder cooperating with each other to access, decode and visualize coded information comprised in a memory unit located on the card. These

prior art devices, however, necessitate multiple controls thereon to accomplish different functions of the card.

SUMMARY OF THE INVENTION

The present invention relates to a portable electronic device, comprising:

- an electronic circuit capable of storing data therein, capable of processing data, and capable of data input and output;
- a control device operatively linked to said electronic circuit, with an invariable activation command being issued when said control device is triggered;
- a user interface device operatively linked to said electronic circuit;
- a data transceiver operatively linked to said electronic circuit;
- a cue receiver for receiving a selectively emitted activation cue from a source external to said portable electronic device;
- a data conveyance switching element operatively linked to said electronic circuit, said switching element being in an activated state upon an activation cue having been received by said cue receiver, and being in an inactive state when no activation cue was received by said cue receiver;

and

- power means for providing power to said portable electronic device;

wherein upon said control device being selectively triggered to issue said invariable activation command:

- if said switching element is in said activated state, a data exchange will be initiated through the instrumentality of said data transceiver for exchanging data between said electronic circuit and an external data exchange device;
- if said switching element is in said inactive state, data will be conveyed from said electronic circuit to said user interface device for communicating information to the portable electronic device holder.

In one embodiment, said user interface device is a display screen.

In one embodiment, wherein said data transceiver comprises a data transmitter and a data receiver distinct from said data transmitter.

In one embodiment, said cue receiver is said data receiver.

In one embodiment, said control device is a biometric parameter detector, such as a fingerprint scanner capable of obtaining a fingerprint scan, whereby said control device is triggered when the fingerprint scan matches a fingerprint image pre-saved in said electronic circuit.

In one embodiment, said control device is a button, and said control device is triggered when the button is pressed.

In one embodiment, said electronic circuit comprises said switching element.

In one embodiment, said electronic circuit comprises a microchip, and wherein said switching element is a series of instructions programmed onto said microchip.

In one embodiment, said switching element comprises a decisional logical circuit.

The invention also relates to a data exchange system comprising :

- a data exchange device comprising a first electronic circuit, a first data transceiver and a cue emitter; and
- a portable electronic device, comprising:
  - a second electronic circuit capable of storing data therein, capable of processing data, and capable of data input and output;
  - a control device operatively linked to said electronic circuit, with an invariable activation command being issued when said control device is triggered;
  - a user interface device operatively linked to said electronic circuit;
  - a second data transceiver operatively linked to said electronic circuit;
  - a data conveyance switching element operatively linked to said electronic circuit, said switching element being in an activated state upon an activation cue having been received by said cue receiver, and being in an inactive state when no activation cue was received by said cue receiver;

  and

  - power means for providing power to said portable electronic device;

wherein upon said control device being selectively triggered to issue said invariable activation command:

- if said switching element is in its activated state, a data exchange will occur between said first data transceiver and said second data transceiver, thereby

exchanging data between said data exchange device and said portable electronic device;

- if said switching element is in its inactive state, data is forwarded to said user interface device for communicating information to the portable electronic device holder.

The invention further relates to a portable electronic device comprising:

- an electronic circuit capable of storing data therein, capable of processing data, and capable of data input and output;
- a control device operatively linked to said electronic circuit, with an invariable activation command being issued when said control device is triggered;
- first and second data conveyance functions programmed in said electronic circuit;
- a cue receiver for receiving a selectively emitted activation cue from a source external to said portable electronic device; and
- power means, for providing power to said portable electronic device;

wherein upon said control device being selectively triggered to issue said invariable activation command, said electronic circuit will accomplish said first data conveyance function if an activation cue was received by said cue receiver and said second data conveyance function if no cue was received by said cue receiver.

The invention also relates to a method for data exchange with a portable electronic device of the type comprising: an electronic circuit capable of storing data therein, capable of processing data, and capable of data input and output, a control device operatively linked to said circuit, a user interface device operatively linked to said circuit, communication ports operatively linked to said circuit, a switching element operatively linked to said electronic circuit and being in a default inactive state, and power means for providing power to said portable electronic device, said method comprising the steps of :

- awaiting for an activation cue to be received at a predetermined one of said communication ports;
- if an activation cue is received at one of said communication ports, changing the state of said switching element from its default inactive state to an activated state; and

- selectively triggering said control device to issue an invariable activation command, whereby said method will further comprise one of the two following steps:
  - if said switching element is in its activated state, initiating a data exchange with an external data exchange device through at least one of said communication ports; and
  - if said switching element is in its inactive state, conveying data from said electronic circuit to said user interface device for communicating information to the portable electronic device holder.

In one embodiment, said activation cue is received at one of said communication ports distinct from another one of said communication ports used for data exchange with the external data exchange device.

In one embodiment, the additional following step occurs after selectively triggering said control device if said switching element is in said activated state:

- conveying data from said electronic circuit to said user interface device for communicating information to the portable electronic device holder.

DESCRIPTION OF THE DRAWINGS

In the annexed drawings :

Figure 1 is a schematic view of a data exchange system, showing a portable electronic device according to one embodiment of the present invention and a data exchange device, and further suggesting in dotted lines a communication link being established between the portable electronic device and the data exchange device;

Figure 2 is an enlarged schematic view of the portable electronic device of figure 1, showing the electronic circuit thereof in greater detail; and

Figure 3 is a view similar to figure 1, but showing a portable electronic device according to an alternate embodiment of the present invention cooperating with an alternate corresponding data exchange device.

DETAILED DESCRIPTION OF THE EMBODIMENTS

Figure 1 shows a data exchange system 8 comprising a portable electronic device 10 according to the present invention and a data exchange device 9. Portable electronic device 10 can be used for example for monetary transactions or identification purposes.

Device 10 comprises a rigid or semi-rigid main body 11 on which are operatively mounted: a control device 12, an electronic circuit 14, a display screen 16, a transceiver 18 and power means 20. Main body 11 can be made from a plastic material for example.

As illustrated in figure 2, electronic circuit 14 comprises a central unit 40 cooperating with a memory unit 42 and an Input/Output (I/O) controller 44. I/O controller 44 comprises I/O ports 44a and a data forwarding switching element 44b. I/O ports 44a handle the inputting and outputting of the data, and switching element 44b directs the data flow towards an appropriate destination, as detailed hereinafter.

Central unit 40 is operatively linked to I/O controller 44. Central unit 40 is able to process data electronically stored in memory unit 42, and is further capable of storing data thereon. Central unit 40 collaborates with I/O controller 44, and is capable of processing data incoming therefrom and of sending data thereto in order for this data to be appropriately outputted to components operatively connected to I/O controller 44.

Memory unit 42 of circuit 14 can comprise pre-stored data thereon. For example, this pre-stored data may comprise data related to the cardholder, such as the cardholder's name, address, his bank balance, his date of birth, or any other desired information. In one embodiment, the pre-stored data can further comprise validation data about the cardholder that will be used to authenticate the user, for example a personal identification number (PIN) or a fingerprint image. In another embodiment, the pre-stored data comprises electronic money usable to purchase goods and services according to known electronic wallet transaction methods.

Electronic circuit 14 comprises three essential functions: processing data, storing data, and inputting and outputting data to other components. The diagram of figure 2 shows a specific layout of operational blocks comprised within electronic circuit 14 and cooperating with each other to provide these three functions thereto. It is

understood that alternate schematic circuit layouts could illustrate these three functions without departing from the scope of the present invention.

Electronic circuit 14 is operatively connected through the instrumentality of its I/O controller 44 to control device 12, screen 16 and transceiver 18.

In one embodiment, electronic circuit 14 is a programmable microchip, as found on smart cards.

Screen 16 is capable of displaying information transferred thereto from electronic circuit 14 through the instrumentality of I/O controller 44. Display screen 16 can be a LCD (liquid crystal display) screen embedded into main body 11 of the device. In one embodiment of the present invention, screen 16 is replaced with another user interface device, for example a speaker with voice emission software which would transform information forwarded thereto to speech understandable by the portable electronic device holder.

Control device 12 can be any suitable device allowing the portable electronic device holder to selectively trigger a data conveyance operation as detailed hereinafter. Control device 12 can be for example a single manually activated button provided on the portable electronic device main body 11 (as schematically illustrated in figures 1-3) which, when pressed, issues an activation command that triggers a particular data conveyance as described hereinbelow. Alternatively, control device 12 can include validation means such as a biometric parameter detector, for example a fingerprint scanner capable of obtaining a fingerprint image, which can be compared by central unit 40 to a fingerprint image pre-saved in memory unit 42. A fingerprint image match would validate that the user of portable electronic device 10 is authorized to use the latter, and then trigger the data conveyance operation. In another alternate embodiment, control device 12 could include validation means in the form of a keypad allowing the portable electronic device holder to type in a personal identification number (PIN) which will be compared by central unit 40 to a PIN pre-saved in memory unit 42, with a PIN match validating the portable electronic device user and triggering the data conveyance operation. In yet another embodiment, control device 12 is a validation button required to be pressed and on which a fingerprint scanner is provided: the card holder may thus concurrently apply his fingerprint on the scanner and press on the

button to respectively validate and trigger the data conveyance operation. Any other suitable control device may be used.

Generally, control device 12 is considered to be triggered when the portable electronic device holder has successfully accomplished the necessary steps for control device 12 to issue an activation command, for example when the PIN or fingerprint scan was authenticated, or when the validation button was pressed, or when the button was pressed while the fingerprint scan was authenticated.

In an alternate embodiment of the present invention, control device 12 and LCD screen 16 can be replaced with a single touch-screen display, whereby information can be outputted, and whereby validation information can be captured.

As illustrated in figure 1, a communication link can be established between the electronic device transceiver 18 and the transceiver 9a of data exchange device 9.

Data exchange device 9 can be any sort of data exchange device comprising an electronic circuit (not shown) therein and a data transceiver 9a therein able to cooperate with transceiver 18 of device 10. In one embodiment, data exchange device 9 is another portable electronic device 10. Data exchange device 10 can alternately be a computer, an interface machine such as an automatic teller machine, or any other suitable data exchange device.

The communication link can be a contact or contactless link, for example an infrared or radio wave communication link. Thus, the electronic device transceiver 18 can be any suitable emitting and receiving device capable of communication with the data exchange device transceiver 9a. In an embodiment wherein circuit 14 is a microchip similar to the ones found on smart cards, transceiver 18 could include a series of electrical contacts located on the surface of the microchip destined to cooperate with a corresponding type of electronic device reader, as known in the art.

Transceiver 18 is also a cue receiver, whereby an activation cue can be received by electronic device 10 from data exchange device transceiver 9a. This activation cue is in the form of a data communication of a specific type which will be recognized by electronic device 10 as an activation cue, for example a predetermined bit sequence.

Switching element 44b can be any type of device allowing data to be conveyed according to alternate data conveyance operations in response to an activation cue being received by transceiver 18 or not, as described hereinafter. According to the

embodiment shown in figures 1 and 2, electronic circuit 14 comprises switching element 44b. In an embodiment wherein electronic circuit 14 comprises a microchip, switching element 44b can be a series of instructions programmed onto the microchip whereby the data conveyance operation will be automatically executed according to whether or not an activation cue was received by transceiver 18. Alternately, switching element 44b can comprise a decisional logical circuit. Generally, switching element 44b can be a physical structure, a virtual program, or both.

According to the invention, at any given time, switching element 44b will consequently be in either one of the two following states:

a) an activated state wherein an activation cue was received by transceiver 18; or

b) an inactive state wherein no activation cue was received by transceiver 18.

By default, switching element 44b is in its inactive state.

Power means 20 can be any type of power source suitable for providing power to the portable electronic device components that require power, or for receiving power from an external source to re-distribute it to the portable electronic device components that require power. For example, power means 20 can be a battery, or a connector destined to be engaged by a corresponding external connector linked to a power source.

In the embodiment of figures 1-2, power means 20 is illustrated as being connected to all the portable electronic device components; it will be obvious for those skilled in the art that power means 20 could be connected only to one or a few components that require a power source to operate, depending on the exact nature of portable electronic device 10 and of each of its components.

In use, upon control device 12 being selectively triggered by the portable electronic device holder, an activation command will be issued by control device 12 to electronic circuit 14, in reaction to which data will be conveyed within portable electronic device 10, and possibly additionally conveyed to and from portable electronic device 10, according to a pre-determined data conveyance operation. The exact nature of this data conveyance operation will depend on the state of switching element 44b.

More particularly, if no activation cue is received by portable electronic device 10, then switching element remains in its inactive state. Upon control device 12 being

selectively triggered by the portable electronic device holder, data will be forwarded from electronic circuit 14 to user interface device 16, for communicating information to the portable electronic device holder.

However, upon an activation cue being received by portable electronic device 10, switching element 44b switches to its activated state. If control device 12 is selectively triggered by the portable electronic device holder while switching element 44b is in this activated state, a data exchange will be initiated between portable electronic device 10 and the external data exchange device 9. This data exchange may be in the form of a data download from electronic device 10 to data exchange device 9, of a data upload to electronic device 10 from data exchange device 9, or of a data download and a data upload - with this last alternative being the most likely in many applications.

Thus, upon control device 12 being selectively triggered to issue an activation command by the portable electronic device holder, one of two alternate data conveyance operations will be initiated within portable electronic device 10. In the case where no activation cue was received by portable electronic device 10, data will be communicated to the portable electronic device holder by means of user interface device 16. However, if an activation cue was previously received by portable electronic device 10, a data exchange will be initiated between portable electronic device 10 and data exchange device 9.

It is noted that, according to the present invention, the activation command issued when control device 12 is triggered, is an invariable activation command. That is to say that the portable electronic device holder will not be able to select to issue different activation commands by means of control device 12 depending on whether the user considers that a data exchange operation should be accomplished with an external data exchange device 9, or whether the user wishes to display information on screen 16 on the basis of data stored in memory 42. The same invariable activation command will thus be issued upon control device 12 being triggered, and it is the state of switching element 44b, resulting from the receipt or non-receipt of an activation cue by portable electronic device 10, that will be decisive as to the type of data conveyance that will occur.

It is further noted that the above-mentioned triggering of control device 12 may comprise a single step, such as pressing a single button, or more than one step, such as pressing a button and concurrently applying one's fingerprint on a fingerprint scanner provided over the button, or typing in a PIN on a keypad provided on the portable electronic device. However, this control device triggering operation is accomplished in a same manner notwithstanding whether a data exchange between portable electronic device 10 and an external data exchange device 9 is to be accomplished, or whether a data conveyance occurs exclusively within portable electronic device 10, between electronic circuit 14 and screen 16. Consequently, it can be said that control device 12 will issue an invariable activation command when it is triggered, even if control device 12 may include more than one button, biometric parameter detector, etc... that need to be concurrently or sequentially activated for control device 12 to issue a single, invariable activation command. Of course, this single invariable activation command will trigger alternate data conveyance operations responsively to the reception or non-reception of an activation cue, so ulterior alternate commands within electronic circuit 14 will occur depending on the data conveyance operation type, but the initial activation command will not depend on the reception or non-reception of an activation cue.

One example of a particular application of the present invention is the use of a portable electronic device 10 as a quick payment means, such as for paying public transportation fares. In such a case, data exchange device 9 would represent the payment debit machine, and portable electronic device 10 would be a payment card with pre-stored electronic money thereon. When the cardholder would want to use the public transportation services, he would approach the area of access to public transportation where a debit machine 9 would be provided. Debit machine 9 would continuously, or at regular time intervals, or when prompted to do so, emit an activation cue in the form of a predetermined contactless data transmission. Upon the cardholder approaching his payment card within a range allowing it to receive the activation cue from the debit machine, he could then trigger his control device 12 whereby a data exchange in the form of an electronic money transaction would occur between the payment card 10 and the debit machine 9. This data exchange could include any type of information required for electronic money transactions, as known in the art. For

example, the following data exchange could occur, in addition to the reception of the activation cue:

- a message is sent from portable electronic device 10 to debit machine 9 to inquire as to the fare for passage;
- the fare for passage is transferred from debit machine 9 to payment card 10;
- after verification by the card electronic circuit 14 that the card memory 42 still stores a sufficient amount of electronic money, payment card 10 then sends a right-of-passage message to data exchange device 9; and
- debit machine 9 sends a confirmation of right-of-passage to payment card 10, the latter then debiting the passage fare from the total electronic money amount stored in the card memory 42. Debit machine 9 also sends the required information to an exterior passage control device to allow passage of the cardholder to the public transportation services.

If, on the other hand, control device 12 is triggered at any time when switching element 44b is in its inactive state, i.e. not within the activation cue emission range of a public transportation service debit machine 9, then data from electronic circuit 14 will be sent to display screen 16 to display the total amount of electronic money remaining in card memory 42. No data exchange with an external debit machine would then be attempted by card 10.

Thus, in the above example, upon triggering control device 12, an invariable activation command would be issued that would result in two different possible data conveyance operations: if an activation cue has been previously received from a nearby debit machine 9, payment for right-of-passage would be made to allow the cardholder to use the public transportation services; on the other hand, if no activation cue has been previously received from a debit machine 9, then verification of the electronic money amount stored on the card memory 42 would be made.

Portable electronic device 10 could also have a plethora of other alternate purposes. For example, portable identification device 10 could be used as an electronic passport. This passport, when its control device is triggered, could be used to transmit identification data of the electronic passport owner to a data exchange device 9 if an activation cue has been received by the electronic passport, or to simply display this

information on the display screen of the electronic passport if no activation cue has been received by the electronic passport.

The present invention is thus particularly advantageous, in that the portable electronic device holder needs only trigger control device 12 to issue an invariable activation command, for either the data exchange or the data display to occur. By means of the switching element 44b and transceiver 18 acting as a cue receiver, both located on portable electronic device 10, the proper data conveyance within portable transaction device will occur automatically upon this invariable activation command being issued. Thus, no alternate controls need to be provided on the portable electronic device 10. However, in one embodiment, other controls could be provided on portable electronic device 10 for accomplishing additional actions with portable electronic device 10.

It is noted that the data downloaded to an external data exchange device 9 during a data exchange therewith, and the data conveyed internally from electronic circuit 14 to display screen 16, may be the same data (as is the case in the above example of the electronic passport) or different data (as is the case in the above example of the payment card), depending on the purpose of portable electronic device 10.

The state of switching element 44b may be reset to its default inactive state upon one or more pre-determined conditions being met. In the embodiment where electronic circuit 14 is a microchip, these conditions may be programmed therein. For example, electronic circuit 14 may send a reset command to switching element 44b at regular time intervals, or a certain amount of time after switching element 44b has switched to its activated state.

According to one embodiment, when switching element 44b is in its activated state, upon selective triggering of control device 12, in addition to a data exchange occurring with an external data exchange device, an internal data conveyance from electronic circuit 14 to display screen 16 would also occur. Thus, according to this embodiment, an internal data conveyance would not be exclusive to the inactive state of switching element 44b, while a data exchange with an external data exchange device would be exclusive to the activated state of switching element 44b. In the above example of the payment card, this alternative of the invention would have the

remaining amount of electronic money in the payment card displayed concurrently when a passage fare is paid with the card.

Figure 3 shows an alternate data exchange system 8' comprising an alternate embodiment of a portable electronic device 10' and an alternate data exchange device 9', wherein elements that are similar to those of the first embodiment have primed reference numerals. Portable electronic device 10' includes a transceiver that comprises multiple communication ports, namely a data transmitter 18a, a data receiver 18b, and a cue receiver 19.

Data transmitter 18a and data receiver 18b could use distinct communication modes. For example, transmitter 18a could be a radio wave transmitter, and receiver 18b could be an infrared wave receiver.

Cue receiver 19, which is distinct from data receiver 18b in the embodiment of figure 3, can be of any type suitable for receiving an activation cue from data exchange device 9'. Data exchange device 9' is equipped with a corresponding cue emitter 9b. For example, cue emitter 9b can be a data transmission device emitting data by means of a different medium than that used by data receiver 18b - for example cue emitter 9b can emit radio waves while data transceiver 9a could be capable of emitting and receiving infrared waves. Cue receiver 19 could alternately comprise electrical contacts that would cooperate with corresponding electrical contacts 9b. In one embodiment, cue receiver 19 could be a button to be engaged by an automated finger device (the cue emitter 9b) in a slot of the data exchange device in which portable electronic device 10 is to be inserted. In any event, cue receiver 19 represents any suitable structure capable of receiving an activation cue from data exchange device 9', for indicating a data exchange opportunity between portable electronic device 10' and data exchange device 9'.

Any further modification, which does not deviate from the scope of the present invention, is considered to be included therein.

CLAIMS

1. A portable electronic device, comprising:

- an electronic circuit capable of storing data therein, capable of processing data, and capable of data input and output;
- a control device operatively linked to said electronic circuit, with an invariable activation command being issued when said control device is triggered;
- a user interface device operatively linked to said electronic circuit;
- a data transceiver operatively linked to said electronic circuit;
- a cue receiver for receiving a selectively emitted activation cue from a source external to said portable electronic device;
- a data conveyance switching element operatively linked to said electronic circuit, said switching element being in an activated state upon an activation cue having been received by said cue receiver, and being in an inactive state when no activation cue was received by said cue receiver;

and

- power means for providing power to said portable electronic device;

wherein upon said control device being selectively triggered to issue said invariable activation command:

- if said switching element is in said activated state, a data exchange will be initiated through the instrumentality of said data transceiver for exchanging data between said electronic circuit and an external data exchange device;
- if said switching element is in said inactive state, data will be conveyed from said electronic circuit to said user interface device for communicating information to the portable electronic device holder.

2. A portable electronic device as defined in claim 1, wherein said user interface device is a display screen.

3. A portable electronic device as defined in claim 1, wherein said data transceiver comprises a data transmitter and a data receiver distinct from said data transmitter.

4. A portable electronic device as defined in claim 3, wherein said cue receiver is said data receiver.

5. A portable electronic device as defined in claim 1, wherein said control device is a biometric parameter detector.

6. A portable electronic device as defined in claim 5, wherein said biometric parameter detector is a fingerprint scanner capable of obtaining a fingerprint scan, and whereby said control device is triggered when the fingerprint scan matches a fingerprint image pre-saved in said electronic circuit.

7. A portable electronic device as defined in claim 1, wherein said control device is a manually activated button, and whereby said control device is triggered when the button is pressed.

8. A portable electronic device as defined in claim 1, wherein said electronic circuit comprises said switching element.

9. A portable electronic device as defined in claim 8, wherein said electronic circuit comprises a microchip, and wherein said switching element is a series of instructions programmed onto said microchip.

10. A portable electronic device as defined in claim 1, wherein said switching element comprises a decisional logical circuit.

11. A data exchange system comprising :

- a data exchange device comprising a first electronic circuit, a first data transceiver and a cue emitter; and
- a portable electronic device, comprising:
  - a second electronic circuit capable of storing data therein, capable of processing data, and capable of data input and output;

- a control device operatively linked to said electronic circuit, with an invariable activation command being issued when said control device is triggered;
- a user interface device operatively linked to said electronic circuit;
- a second data transceiver operatively linked to said electronic circuit;
- a data conveyance switching element operatively linked to said electronic circuit, said switching element being in an activated state upon an activation cue having been received by said cue receiver, and being in an inactive state when no activation cue was received by said cue receiver;

and

- power means for providing power to said portable electronic device;

wherein upon said control device being selectively triggered to issue said invariable activation command:

- if said switching element is in its activated state, a data exchange will occur between said first data transceiver and said second data transceiver, thereby exchanging data between said data exchange device and said portable electronic device;
- if said switching element is in its inactive state, data is forwarded to said user interface device for communicating information to the portable electronic device holder.

12. A portable electronic device comprising:

- an electronic circuit capable of storing data therein, capable of processing data, and capable of data input and output;
- a control device operatively linked to said electronic circuit, with an invariable activation command being issued when said control device is triggered;
- first and second data conveyance functions programmed in said electronic circuit;
- a cue receiver for receiving a selectively emitted activation cue from a source external to said portable electronic device; and
- power means, for providing power to said portable electronic device;

wherein upon said control device being selectively triggered to issue said invariable activation command, said electronic circuit will accomplish said first data

conveyance function if an activation cue was received by said cue receiver and said second data conveyance function if no cue was received by said cue receiver.

13. A method for data exchange with a portable electronic device of the type comprising: an electronic circuit capable of storing data therein, capable of processing data, and capable of data input and output, a control device operatively linked to said circuit, a user interface device operatively linked to said circuit, communication ports operatively linked to said circuit, a switching element operatively linked to said electronic circuit and being in a default inactive state, and power means for providing power to said portable electronic device, said method comprising the steps of :

- awaiting for an activation cue to be received at a predetermined one of said communication ports;
- if an activation cue is received at one of said communication ports, changing the state of said switching element from its default inactive state to an activated state; and
- selectively triggering said control device to issue an invariable activation command, whereby said method will further comprise one of the two following steps:
  - if said switching element is in its activated state, initiating a data exchange with an external data exchange device through at least one of said communication ports; and
  - if said switching element is in its inactive state, conveying data from said electronic circuit to said user interface device for communicating information to the portable electronic device holder.

14. A method as defined in claim 13,
wherein said activation cue is received at one of said communication ports distinct from another one of said communication ports used for data exchange with the external data exchange device.

15. A method as defined in claim 13,
wherein the additional following step occurs after selectively triggering said control device if said switching element is in said activated state:

- conveying data from said electronic circuit to said user interface device for communicating information to the portable electronic device holder.

Rec'd PCT/PTO 15 OCT 2005

(12) INTERNATIONAL APPLICATION PUBLISHED UNDER THE PATENT COOPERATION TREATY (PCT)

(19) World Intellectual Property Organization
International Bureau

(43) International Publication Date
21 October 2004 (21.10.2004)

PCT

(10) International Publication Number
WO 2004/090805 A1

(51) International Patent Classification[7]: G06K 19/07

(21) International Application Number: PCT/IB2003/001523

(22) International Filing Date: 14 April 2003 (14.04.2003)

(25) Filing Language: English

(26) Publication Language: English

(71) Applicant *(for all designated States except US)*: **G. HOLDINGS LTD.** [BS/BS]; 1A, Star Plaza, Mackey St., P.O. Box SS-19013, Nassau (BS).

(72) Inventor; and
(75) Inventor/Applicant *(for US only)*: **GAILLARD, Joël** [FR/BS]; 1A, Star Plaza, Mackey ST., P.O. Box SS-19013, Nassau (BS).

(74) Agent: **NITHARDT, Roland**; Cabinet Nithardt et Associés S.A., B.P. 1445, F-68071 Mulhouse Cedex (FR).

(81) Designated States *(national)*: AE, AG, AL, AM, AT, AU, AZ, BA, BB, BG, BR, BY, BZ, CA, CH, CN, CO, CR, CU, CZ, DE, DK, DM, DZ, EC, EE, ES, FI, GB, GD, GE, GH, GM, HR, HU, ID, IL, IN, IS, JP, KE, KG, KP, KR, KZ, LC, LK, LR, LS, LT, LU, LV, MA, MD, MG, MK, MN, MW, MX, MZ, NI, NO, NZ, OM, PH, PL, PT, RO, RU, SC, SD, SE, SG, SK, SL, TJ, TM, TN, TR, TT, TZ, UA, UG, US, UZ, VC, VN, YU, ZA, ZM, ZW.

(84) Designated States *(regional)*: ARIPO patent (GH, GM, KE, LS, MW, MZ, SD, SL, SZ, TZ, UG, ZM, ZW), Eurasian patent (AM, AZ, BY, KG, KZ, MD, RU, TJ, TM), European patent (AT, BE, BG, CH, CY, CZ, DE, DK, EE, ES, FI, FR, GB, GR, HU, IE, IT, LU, MC, NL, PT, RO, SE, SI, SK, TR), OAPI patent (BF, BJ, CF, CG, CI, CM, GA, GN, GQ, GW, ML, MR, NE, SN, TD, TG).

Published:
— *with international search report*

For two-letter codes and other abbreviations, refer to the "Guidance Notes on Codes and Abbreviations" appearing at the beginning of each regular issue of the PCT Gazette.

(54) Title: PORTABLE ELECTRONIC DEVICE CAPABLE OF ALTERNATE DATA CONVEYANCE OPERATIONS RESPONSIVE TO AN INVARIABLE ACTIVATION COMMAND

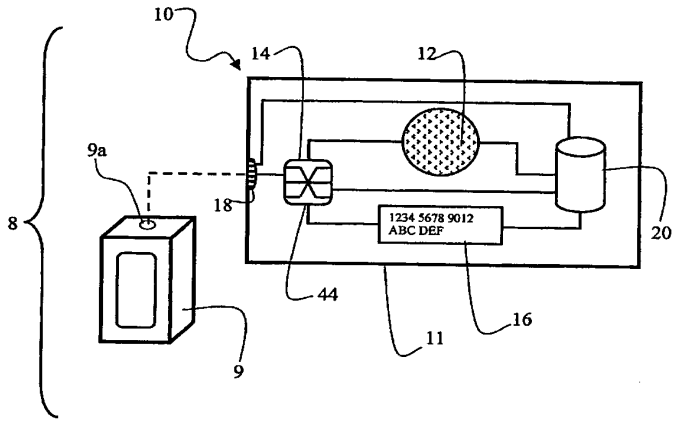

(57) Abstract: The portable electronic device (10) comprises an electronic circuit capable of storing data therein, capable of processing data, and capable of data input and output; a control device (12) operatively linked to the electronic circuit (14), with an invariable activation command being issued when the control device is triggered; first and second data conveyance functions programmed in the electronic circuit; a cue receiver (18) for receiving a selectively emitted activation cue from a source (9) external to the portable electronic device; and a power connector or an internal power source (20) for providing power to the portable electronic device. In use, upon the control device being selectively triggered to issue the invariable activation command, the electronic circuit will accomplish the first data conveyance function if an activation cue was received by the cue receiver and the second data conveyance function if no cue was received by the cue receiver.

WO 2004/090805 A1

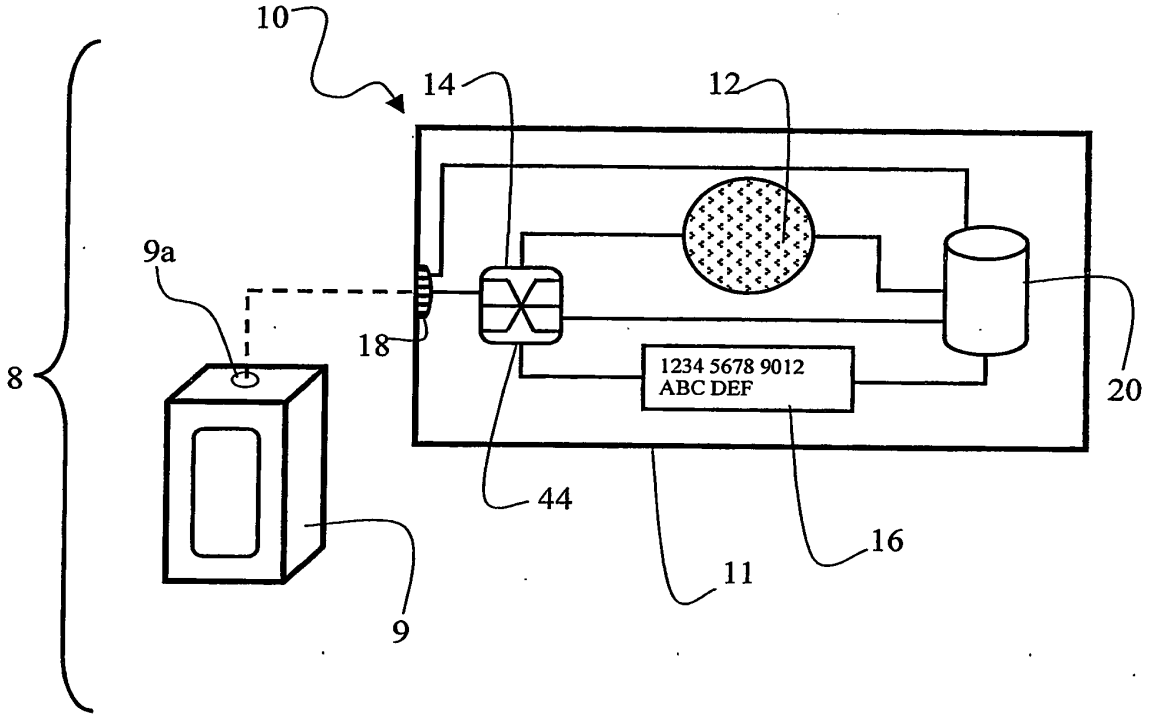

Fig. 1

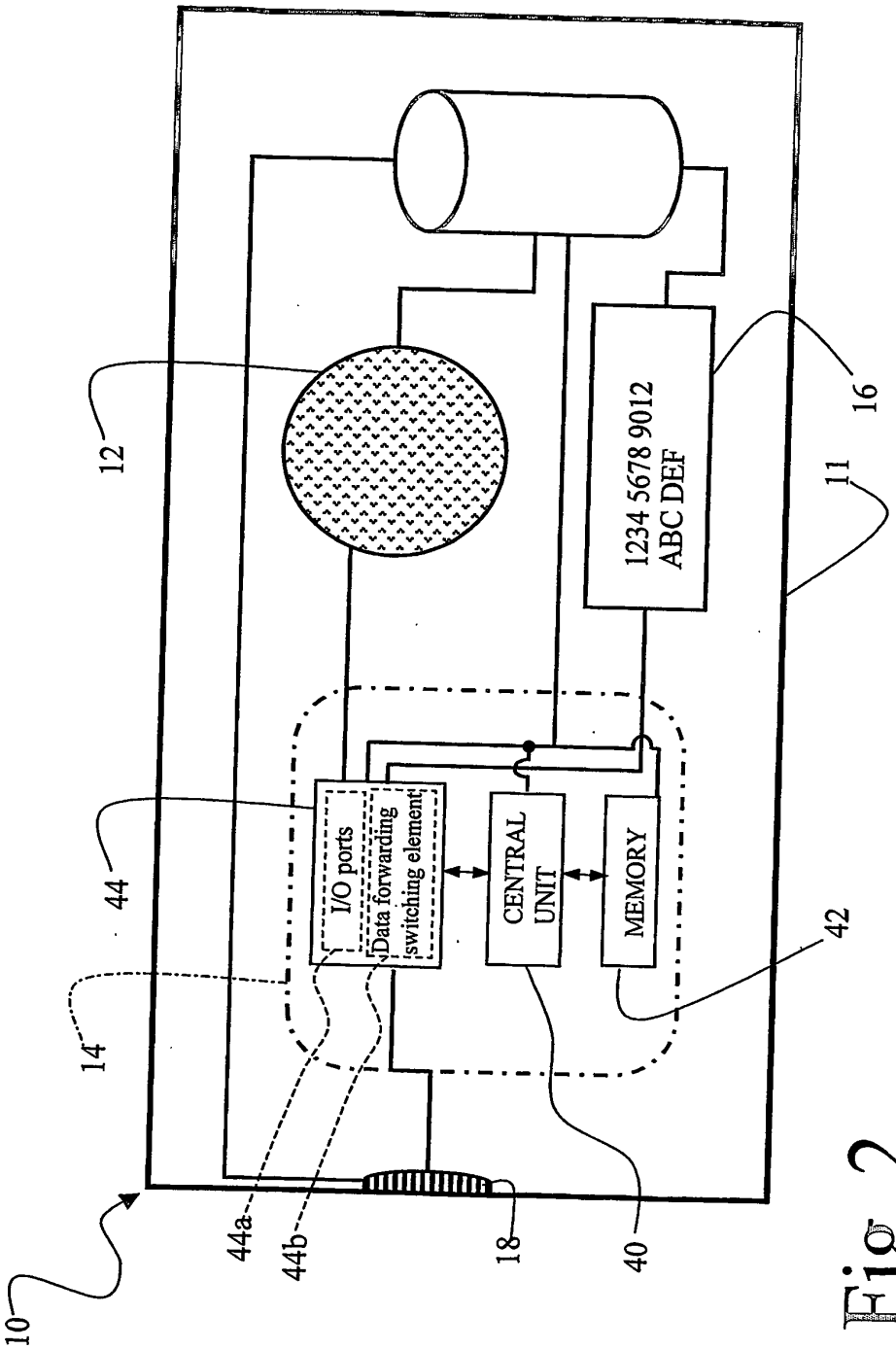
1234 5678 9012
ABC DEF
I/O ports
Data forwarding
switching element
CENTRAL
UNIT
MEMORY
10
11
12
14
16
18
40
42
44
44a
44b

Fig. 2

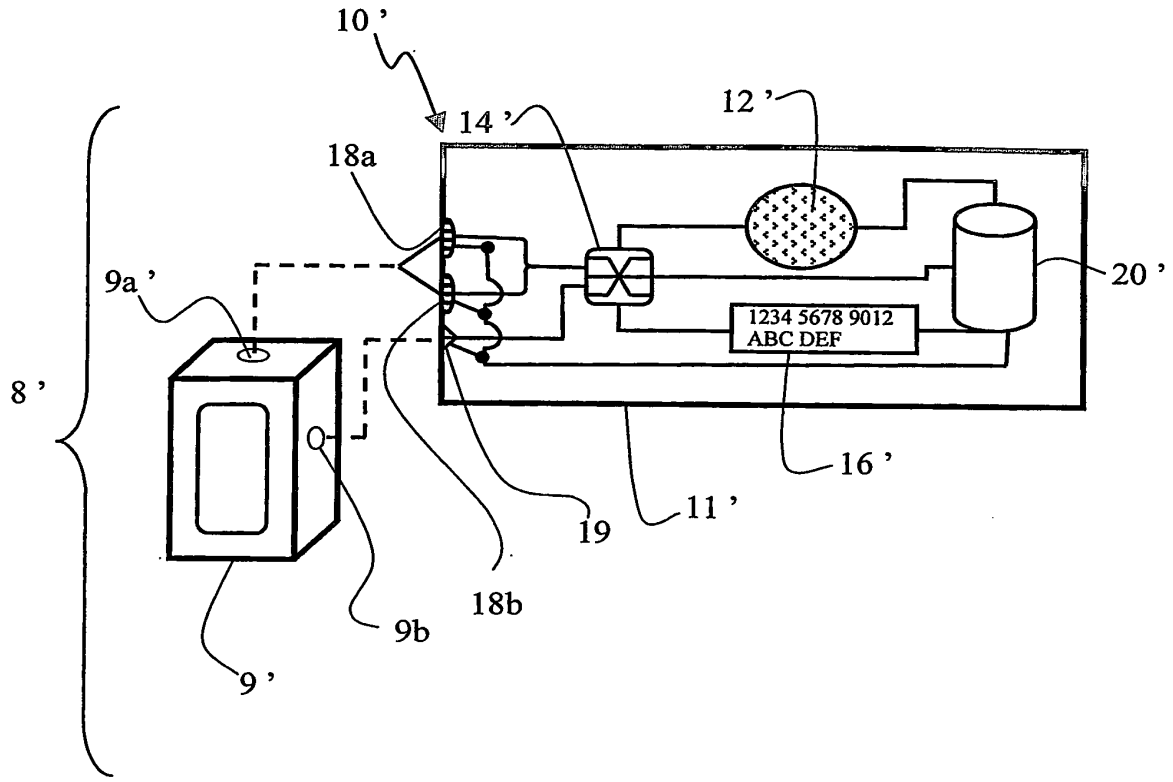

Fig. 3

PATENT APPLICATION SERIAL NO. _____

U.S. DEPARTMENT OF COMMERCE
PATENT AND TRADEMARK OFFICE
FEE RECORD SHEET

10/21/2005 MKAYPAGH 00000068 503156 10552912

01 FC:2631	150.00	DA
02 FC:2642	200.00	DA
03 FC:2633	100.00	DA
04 FC:2614	100.00	DA

PTO-1556
(5/87)

*U.S. Government Printing Office: 2002 — 489-267/69033

PATENT APPLICATION FEE DETERMINATION RECORD

Effective December 8, 2004

Application or Docket Number: 10/552912

CLAIMS AS FILED - PART I

	(Column 1)	(Column 2)	SMALL ENTITY TYPE ☐ RATE	FEE	OR	OTHER THAN SMALL ENTITY RATE	FEE
U.S. NATIONAL STAGE FEES	14						
BASIC FEE	SMALL ENT. = $ 150	LARGE ENT. = $ 300	BASIC FEE	150	OR	BASIC FEE	
EXAMINATION FEE	Satisfies PCT Article 33(1)-(4) = $ 50 / $ 100	All other situations = $ 100 / $ 200	EXAM. FEE	100		EXAM. FEE	
SEARCH FEE	U.S. is ISA = $ 50 / $ 100 ALL other countries = $ 200 / $ 400	ALL other situations = $ 250 / $ 500	SEARCH FEE	200		SEARCH FEE	
FEE FOR EXTRA SPEC. PGS.	minus 100 =	/ 50 =	X $ 125 =			X $ 250 =	
TOTAL CHARGEABLE CLAIMS	14 minus 20 =	*	X $ 25 =		OR	X $ 50 =	
INDEPENDENT CLAIMS	4 minus 3 =	* 1	X $ 100 =	100	OR	X $ 200 =	
MULTIPLE DEPENDENT CLAIM PRESENT	N ☐		+ $ 180 =		OR	+ $ 360 =	
* If the difference in column 1 is less than zero, enter "0" in column 2			TOTAL	350	OR	TOTAL	

CLAIMS AS AMENDED - PART II

		(Column 1) CLAIMS REMAINING AFTER AMENDMENT		(Column 2) HIGHEST NUMBER PREVIOUSLY PAID FOR	(Column 3) PRESENT EXTRA	SMALL ENTITY RATE	ADDI-TIONAL FEE	OR	OTHER THAN SMALL ENTITY RATE	ADDI-TIONAL FEE
AMENDMENT A	Total	*	Minus	**	=	X $ 25 =		OR	X $ 50 =	
	Independent	*	Minus	***	=	X $ 100 =		OR	X $ 200 =	
	FIRST PRESENTATION OF MULTIPLE DEPENDENT CLAIM ☐					+ $ 180 =		OR	+ $ 360 =	
						TOTAL ADDIT. FEE		OR	TOTAL ADDIT. FEE	

		(Column 1) CLAIMS REMAINING AFTER AMENDMENT		(Column 2) HIGHEST NUMBER PREVIOUSLY PAID FOR	(Column 3) PRESENT EXTRA	RATE	ADDI-TIONAL FEE	OR	RATE	ADDI-TIONAL FEE
AMENDMENT B	Total	*	Minus	**	=	X $ 25 =		OR	X $ 50 =	
	Independent	*	Minus	***	=	X $ 100 =		OR	X $ 200 =	
	FIRST PRESENTATION OF MULTIPLE DEPENDENT CLAIM ☐					+ $ 180 =		OR	+ $ 360 =	
						TOTAL ADDIT. FEE		OR	TOTAL ADDIT. FEE	

* If the entry in column 1 is less than the entry in column 2, write "0" in column 3.
** If the "Highest Number Previously Paid For" IN THIS SPACE is less than '20', enter "20".
*** If the "Highest Number Previously Paid For" IN THIS SPACE is less than '3', enter "3".
The "Highest Number Previously Paid For" (Total or Independent) is the highest number found in the appropriate box in column 1.

MULTIPLE DEPENDENT CLAIM
FEE CALCULATION SHEET
(FOR USE WITH FORM PTO-875)

SERIAL NO. 10/552912

FILING DATE

APPLICANT(S)

CLAIMS

	AS FILED		AFTER 1st AMENDMENT		AFTER 2nd AMENDMENT	
	IND.	DEP.	IND.	DEP.	IND.	DEP.
1	1					
2		1				
3		1				
4		1				
5		1				
6		1				
7		1				
8		1				
9		1				
10	1					
11	1					
12	1					
13		1				
14		1				
15						
16						
17						
18						
19						
20						
21						
22						
23						
24						
25						
26						
27						
28						
29						
30						
31						
32						
33						
34						
35						
36						
37						
38						
39						
40						
41						
42						
43						
44						
45						
46						
47						
48						
49						
50						
TOTAL IND.	4					
TOTAL DEP.	10					
TOTAL CLAIMS	14					

	AS FILED		AFTER 1st AMENDMENT		AFTER 2nd AMENDMENT	
	IND.	DEP.	IND.	DEP.	IND.	DEP.
51						
52						
53						
54						
55						
56						
57						
58						
59						
60						
61						
62						
63						
64						
65						
66						
67						
68						
69						
70						
71						
72						
73						
74						
75						
76						
77						
78						
79						
80						
81						
82						
83						
84						
85						
86						
87						
88						
89						
90						
91						
92						
93						
94						
95						
96						
97						
98						
99						
100						
TOTAL IND.						
TOTAL DEP.						
TOTAL CLAIMS						

PTO - 1360 (REV. 11/04)

U.S. DEPARTMENT of COMMERCE
Patent and Trademark Office

10/552912

JC20 Rec'd PCT/PTO 13 OCT 2005

Application Data Sheet

Application Information

Application Type::	Entry into National Stage in U.S. from PCT
Subject Matter::	Utility
Title::	PORTABLE ELECTRONIC DEVICE CAPABLE OF ALTERNATE DATA CONVEYANCE OPERATIONS RESPONSIVE TO AN INVARIABLE ACTIVATION COMMAND
Attorney Docket Number::	1-37992
Total Drawing Sheets::	Three
Suggested Drawing Figure:	Fig. 1
Small Entity?::	Yes
Petition Included?::	No

Applicant Information

Applicant Type::	Inventor
Primary Citizenship Country::	France
Given Name::	Joël
Family Name::	Gaillard
City Residence::	Nassau NP
Country of Residence::	Bahamas
Street of Mailing Address::	1A Star Plaza, Mackey Street P.O. Box 19013
City of Mailing Address::	Nassau NP
Country of Mailing Address::	Bahamas
Postal or Zip Code::	19013

Correspondence Information

Correspondence Customer Number:: 43935

Representative Information

Representative Customer Number:: 43935

Foreign Priority Information

Application::	Continuity Type::	Parent Application::	Parent Filing Date::
This Application	National Stage of	PCT/IB2003/001523	14 April 2003

Assignee Information

Assignee name::

Street of Mailing address::

City of mailing address::

Country of mailing address::

Postal or Zip Code of mailing address::

JC20 Rec'd PCT/PTO 13 OCT 2005

#2

PTO/SB/08A (08-03)
Approved for use through 07/31/2006. OMB 0651-0031
U.S. Patent and Trademark Office; U.S. DEPARTMENT OF COMMERCE

Under the Paperwork Reduction Act of 1995, no persons are required to respond to a collection of information unless it contains a valid OMB control number.

Substitute for form 1449/PTO

INFORMATION DISCLOSURE STATEMENT BY APPLICANT

(Use as many sheets as necessary)

Sheet 1 of 1

Complete if Known	
Application Number	10/552912
Filing Date	
First Named Inventor	GAILLARD
Art Unit	
Examiner Name	
Attorney Docket Number	1-37992

U. S. PATENT DOCUMENTS

Examiner Initials*	Cite No.[1]	Document Number Number-Kind Code[2] (if known)	Publication Date MM-DD-YYYY	Name of Patentee or Applicant of Cited Document	Pages, Columns, Lines, Where Relevant Passages or Relevant Figures Appear
		US- 5,590,038	12-31-1996	PITRODA	
		US- 5,917,754	06-29-1999	PATHAK et al.	
		US- 6,044,470	03-28-2000	KURIYAMA	
		US- 6,112,987	09-05-2000	LAMBERT et al.	
		US- 6,254,001	07-03-2001	CHAN	
		US- 6,454,172	09-24-2002	MAEDA et al.	
		US- 6,454,173	09-24-2002	GRAVES	
		US- 2003019942	01-30-2003	BLOSSOM	
		US- 6,390,373	05-21-2002	BEYER et al.	
		US- 4,800,255	01-24-1989	IMRAN	
		US- 6,360,954	03-26-2002	BARNARDO	
		US- 5,734,154	03-31-1998	JACHIMOWICZ et al.	
		US- 4,7464787	05-24-1988	SUTO et al.	
		US- 6,402,039	06-11-2002	FREEMAN et al.	
		US-			
		US-			
		US-			
		US-			
		US-			

FOREIGN PATENT DOCUMENTS

Examiner Initials*	Cite No.[1]	Foreign Patent Document Country Code[3]-Number[4]-Kind Code[5] (if known)	Publication Date MM-DD-YYYY	Name of Patentee or Applicant of Cited Document	Pages, Columns, Lines, Where Relevant Passages Or Relevant Figures Appear	T[6]
		DE 10146804	04-10-2003	PHILIPS CORP...		
		DE 4205556	08-26-1993	ANGEWANDTE...		
		DE 4203748	08-05-1993	PROVERA...		

Examiner Signature		Date Considered	

*EXAMINER: Initial if reference considered, whether or not citation is in conformance with MPEP 609. Draw line through citation if not in conformance and not considered. Include copy of this form with next communication to applicant. [1] Applicant's unique citation designation number (optional). [2] See Kinds Codes of USPTO Patent Documents at www.uspto.gov or MPEP 901.04. [3] Enter Office that issued the document, by the two-letter code (WIPO Standard ST.3). [4] For Japanese patent documents, the indication of the year of the reign of the Emperor must precede the serial number of the patent document. [5] Kind of document by the appropriate symbols as indicated on the document under WIPO Standard ST.16 if possible. [6] Applicant is to place a check mark here if English language Translation is attached.

This collection of information is required by 37 CFR 1.97 and 1.98. The information is required to obtain or retain a benefit by the public which is to file (and by the USPTO to process) an application. Confidentiality is governed by 35 U.S.C. 122 and 37 CFR 1.14. This collection is estimated to take 2 hours to complete, including gathering, preparing, and submitting the completed application form to the USPTO. Time will vary depending upon the individual case. Any comments on the amount of time you require to complete this form and/or suggestions for reducing this burden, should be sent to the Chief Information Officer, U.S. Patent and Trademark Office, P.O. Box 1450, Alexandria, VA 22313-1450. DO NOT SEND FEES OR COMPLETED FORMS TO THIS ADDRESS. **SEND TO: Commissioner for Patents, P.O. Box 1450, Alexandria, VA 22313-1450.**

If you need assistance in completing the form, call 1-800-PTO-9199 (1-800-786-9199) and select option 2.

(19) BUNDESREPUBLIK DEUTSCHLAND

DEUTSCHES PATENTAMT

(12) Offenlegungsschrift

(10) DE 42 05 556 A 1

(51) Int. Cl.5: G 06 K 19/07 // H01H 13/50,13/70

(21) Aktenzeichen: P 42 05 556.3

(22) Anmeldetag: 24. 2. 92

(43) Offenlegungstag: 26. 8. 93

DE 42 05 556 A 1

(71) Anmelder:

Angewandte Digital Elektronik GmbH, 2051 Brunstorf, DE

(72) Erfinder:

Kreft, Hans-Diedrich, 2055 Dassendorf, DE

Prüfungsantrag gem. § 44 PatG ist gestellt

(54) Chipkarte mit externem Sicherheitsschalter

(57) Es wird beschrieben, wie durch Unterbringung eines manuell bedienbaren Schalters auf einer Chipkarte die elektronischen Komponenten auf der Karte für unterschiedliche Zwecke aktiviert und deaktiviert werden können.

DE 42 05 556 A 1

Die folgenden Angaben sind den vom Anmelder eingereichten Unterlagen entnommen

Beschreibung

Problemstellung:

Im Einsatz befindliche Plastikkarten, welche elektronisch ablesbar sind, arbeiten vorzugsweise nach zwei Verfahren. Am weitesten verbreitet sind Karten mit Magnetstreifen, welche keinen Chip zur Speicherung und Bearbeitung von Information enthalten. Zunehmend werden Karten eingesetzt, welche einen Chip enthalten, in dem Informationen sicher gespeichert und elektronisch verändert werden können. Diese Karten werden Chipkarten oder smart cards genannt.

Die Versorgung der auf der Karte erforderlichen Chips mit Strom und Spannung geschieht über Kontakte oder kontaktfrei nach einem Verfahren, wie es in der Patentschrift DE 34 47 560 C2 dargelegt ist. Unter Verwendung von Patentschrift DE 34 47 560 C2 arbeiten Chipkartensysteme kontaktfrei, indem Energie- und Datenübertragung induktiv erfolgen. Es sind auch Chipkarten im Einsatz, welche eine interne Stromquelle zur Aufrechterhaltung ihrer Funktion nutzen. Insbesondere wird per interner Stromquelle die Übertragung von Daten zu entfernten Empfängern ermöglicht. Das wahlweise Einschalten einer Stromquelle auf der Chipkarte ist wünschenswert, um einerseits die Stromquelle zu schonen, andererseits um Daten und Kennungen der Chipkarte nur nach Wahl des Nutzers der Chipkarte auszugeben.

Es ist Aufgabe der dargestellten Erfindung, eine Chipkarte zu beschreiben, welche durch eine geeignete elektronische Ausgestaltung das Ein- oder Ausschalten von elektronischen Funktionen auf der Karte gestattet.

Beschreibung der patentgemäßen Lösung

Zu Anspruch 1

In Plastikkarten, wie sie am Markt im Einsatz sind, werden Chips eingebaut. Diese Chips erfüllen bei herkömmlichen Karten ihre Funktion unabhängig vom Nutzer. Wird eine solche Karte in ein übliches Bediengerät gesteckt, wird der Chip in der Karte aktiviert. Damit nimmt der Chip unabhängig vom Nutzer seine Funktion auf. Dies ist in den meisten Fällen gewünscht. Unerwünscht ist die Funktion der Karte beispielsweise, wenn eine Stromquelle auf der Karte sich durch andauernde Aktivität vorzeitig entlädt. Unerwünscht ist es auch, wenn die Karte von außen ohne Beteiligung des Kartenträgers identifiziert werden kann. Dieser Fall tritt bei andauernder elektromagnetischer Abstrahlung von Signalen auf, wobei als Energiequelle die auf der Karte befindliche Stromquelle infrage kommt. Es ist aber auch möglich, Karten in einem elektromagnetischen Feld unbemerkt zu aktivieren und aufgrund der charakteristischen Eigenfrequenz zu identifizieren. Insbesondere die Eigenresonanz der Kartenelektronik kontaktfreier Karten mit ihren Induktivitäten und Kapazitäten läßt sich abfragen. Beim Durchschreiten eines Türrahmens einer Eingangstür könnte eine Abfrage unbemerkt geschehen, indem im Türrahmen eine entsprechende Sende- und Empfangseinrichtung eingebaut ist.

Erfindungsgemäß ist in die Plastikkarte mindestens ein Schalter eingebaut, der von außen bedienbar ist und es derart dem Nutzer der Karte gestattet, in die Funktion der Elektronik einzugreifen. Mit diesem Schalter kann die auf der Karte befindliche Stromquelle (Akku oder Batterie, aber auch Kondensator) ein- und ausgeschaltet werden. Derart bestimmt der Nutzer wahlfrei, wann die Karte ihre Signale abgibt. Nicht nur die definitive Sperrung ist derart von außen möglich, auch die Aktivierung in Notsituationen ist möglich.

So kann es wünschenswert sein, die Karte dauernd Signale aussenden zu lassen, um eine Notsituation des Kartenträgers zu melden. Die Signale wären je nach Frequenz in einem großen Gebiet aufnehmbar, der Träger wäre mit seinem Ort aber auch mit seiner Kennung identifizierbar.

Unabhängig von einer Aktivierung der Stromquelle und damit der Chipkarte kann auch eine Funktionssperrung oder Aktivierung von Teilen der Elektronik oder von Programmen in Abhängigkeit von der Schalterstellung für den Fall in Betracht kommen, da die Chipkarte in einen üblichen Schreib/Leseschlitz gesteckt wird. Per Schalter kann der Kartennutzer bestimmen, ob Funktionen gesperrt oder geöffnet bleiben.

Zu Anspruch 2

Die Schalter können, eingebettet in das Kartenmaterial, als Kippschalter ausgeführt sein, indem zwei erkennbare Ausprägungen an der Oberfläche der Karte die Schaltstellung offenbaren. Vorzugsweise kann die Wölbung den Aktivzustand initiieren und die Einbuchtung den inaktiven Zustand, da eine Einbuchtung bei entsprechender Ausführung seltener eine unbeabsichtigte Aktivierung hervorrufen dürfte. Durch die erkennbare Wölbung oder Einbuchtung ist die Stelle des Schalters für den Nutzer klar erkennbar. Die Stellung kann auch durch optische Anzeigen, Färbungen des Kartenmaterials oder weitere Merkmale erkennbar gemacht werden.

Zu Anspruch 3

Aus Sicherheitsgründen kann es sinnvoll sein, den Schaltzustand erst durch ein wiederholtes Bedienen zu aktivieren. Die Sequenz der Be- und Entlastung des Schalters kann in der Form einer Codierung ähnlich wie beim Morsen gegeben werden.

Zu Anspruch 4

Um die unbemerkte Identifizierung von Karten per spezifischer, elektromagnetischer Rückwirkung (Spektrum der Rückkoppelfrequenzen der Oberwellen) der elektronischen Komponenten einer Karte in einem Wechselfeld zu erschweren, kann der Schalter zur Veränderung der elektronischen Eigenfrequenzen der Elektronikkomponenten verwendet werden. Der Schalter kann beispielsweise bei nicht aktivierter Elektronik Kapazitäten parallel zu den elektronischen Komponenten (insbesondere Spulen) auf der Karte schalten und derart das Frequenzbild der Karte in einem Hochfrequenzfeld entscheidend verändern. Wenn die zugeschalteten Komponenten in ihren Eigenschaften stark zeitlich variieren, ist die eindeutige Identifizierung der Karte und damit des Trägers der Karte nicht mehr möglich.

Patentansprüche

1. Die Erfindung beschreibt eine besondere Ausgestaltung von Chipkarten, welche elektronische Elemente zur kontaktfreien Übertragung von Daten aufweisen, welche **dadurch gekennzeichnet** ist,

daß in die Chipkarte zusätzlich ein oder mehrere bedienbare Schalter eingebaut sind, welche es gestatten, die Elektronik oder Teile der Elektronik per manueller Bedienung ein- oder auszuschalten.

2. Gemäß Anspruch 1 dadurch gekennzeichnet, daß der einzelne Schalter unterhalb des von außen sichtbaren Materials der Karte sitzt und die Schaltstellung durch Wölbung oder Einbuchtung bei Bedienung abtastbar oder auf andere Weise von außen erkennbar ist und den Zustand des Schalters offenbart.

3. Gemäß Anspruch 1, 2, dadurch gekennzeichnet, daß der Schalter zu seiner Funktion eine Druckbe- und Entlastungssequenz erfordert.

4. Gemäß Anspruch 1, 2, 3, dadurch gekennzeichnet, daß die Elektronik mit ihrer elektromagnetischen Rückwirkung in einem elektromagnetischen Wechselfeld in ihrer Charakteristik durch die Stellung des oder der Schalter bestimmt wird.

(19) BUNDESREPUBLIK DEUTSCHLAND

DEUTSCHES PATENTAMT

(12) Offenlegungsschrift

(10) DE 42 03 748 A 1

(51) Int. Cl.5: G 07 G 1/00
G 07 G 5/00

(21) Aktenzeichen: P 42 03 748.4
(22) Anmeldetag: 10. 2. 92
(43) Offenlegungstag: 5. 8. 93

DE 42 03 748 A 1

(30) Innere Priorität: (32) (33) (31)
04.02.92 DE 42 03 141.9

(71) Anmelder:
Provera-Gesellschaft für Projektierung und Vermögensadministration mbH, 7758 Meersburg, DE

(74) Vertreter:
Riebling, P., Dipl.-Ing. Dr.-Ing., Pat.-Anw., 8990 Lindau

(72) Erfinder:
Holzer, Walter, Senator h.c. Dr. h.c., 7758 Meersburg, DE

(56) Für die Beurteilung der Patentfähigkeit in Betracht zu ziehende Druckschriften:

DE 38 06 771 A1
EP 02 53 240 A1

(54) Verfahren und Einrichtung zur Mehrfachnutzung und Auswertung von wiederaufladbaren Chip-Karten

(57) Die Anmeldung betrifft Verfahren und Einrichtungen zur Mehrfachnutzung und Auswertung von wiederaufladbaren Chip-Karten, bei denen jederzeit auf einem LC-Display der Betrag der letzten Buchung und das danach bestehende Restguthaben angezeigt wird.
Die Karte ist so ausgelegt, daß sie von allen bisher in Massen eingesetzten Lesegeräten magnetisch oder über Kontakte oder kontaktlos gelesen werden kann.

DE 42 03 748 A 1

Beschreibung

Der Trend zur bargeldlosen Zahlung mit "Plastikgeld" ist nicht mehr aufzuhalten. Aber die bisherigen Lösungen befriedigen nicht. Die Ursachen sind bekannt:

— Kontaktschwierigkeiten
— mangelnde Speicherqualität (besonders bei Magnetkarten)
— Entsorgung abgebuchter Karten
— keine oder mangelhafte Anzeige des Restguthabens der Karte
— beschränkte Einsatzmöglichkeiten.

In der Patentanmeldung P 41 38 131.9 wurde eine neue umfassende Lösung für eine kontaktlose, wiederaufladbare Multifunktions-Karte mit digitaler Anzeige angemeldet.

Die neue Multifunktions-Karte besitzt im Vergleich zum Stand der Technik wichtige Vorteile:

— kontaktlos, daher keine Kontaktstörungen
— zuverlässige, elektronische Speicher
— wiederaufladbare Dauerkarte
— Digitaldisplay
— beliebige Anzahl von Kostenstellen
— strahlungslose optoelektronische Leistungsübertragung
— keine Identifizierung der Karteninhaber wie bei Kreditkarten (Datenschutz)
— Abmessungen kompatibel mit Kreditkarten
— kompatibel mit normgerechten Chip-Karten.

Darüber hinaus ist es möglich, diese Dauerkarten auch international für verschiedene Währungen auszubilden, indem bei jeder Belastung von dem belastenden Lesegerät der aktuelle Kurs einer Bezugswährung (z. B. ECU) mit eingegeben wird.

Da es in letzter Zeit gelungen ist, die Speicherkapazität von Chip-Karten wesentlich zu erhöhen, hat die vorliegende Patentanmeldung die Aufgabe, ein Verfahren und Einrichtungen zur optimalen Auswertung von wiederaufladbaren Chip-Karten aller Art zu beschreiben.

Die Möglichkeit, solche Karten immer wieder weiterzuverwenden, indem man Beträge einzahlt und das jeweilige Guthaben am Anzeigedisplay jederzeit ablesen kann, erweitert die Einsatzmöglichkeit beträchtlich. Aber es ist auch notwendig, Verfahren und Einrichtungen zu beschreiben, welche die neuen Möglichkeiten nutzen.

Da eine fast beliebig große Zahl von Kostenstellen mit diesen neuen Chip-Karten angesprochen und Dienstleistungen in Anspruch genommen werden können, wird vorgeschlagen, zunächst die jeweiligen Abbuchungen in der Karte in einem nichtflüchtigen Speicher (z. B. EEPROM) zu speichern, so daß zur Kontrolle die abgebuchten Beträge editiert werden können und erst später, z. B. bei jedem Aufladen die vorausgegangenen Zahlungsbuchungen zu löschen, um anschließend den noch verfügbaren Guthabensrest mit dem einbezahlten Betrag zu saldieren und neu zu speichern.

Um eine optimale Auswertung zu erreichen, wird ferner empfohlen, daß vor dem Löschen der bisherigen Buchungen und Daten und vor dem Einbuchen der Einzahlung ein Ausdrucken der gespeicherten Zahlungsbuchungen in Form einer Quittung erfolgt, welche den Vorschriften der Finanzämter oder sonstiger Stellen genügt.

Dabei kann nach einer Rückfrage des Einzahlungsautomaten "Wünschen Sie einen Beleg?" z. B. durch Betätigung einer Taste entschieden werden, ob ein solcher Ausdruck gewünscht wird oder nicht.

Dadurch kann selbst bei einer Vielzahl von Buchungen die Anerkennung solcher Zahlungen z. B. als abzugsfähige Ausgaben beim Finanzamt geltend gemacht werden. Dazu gehört naturgemäß neben dem Betrag das Datum und der Empfänger solcher Beträge und evtl. weitere Angaben, wie z. B. der Umsatzsteuersatz, die ebenfalls zu speichern sind.

Die kontaktlosen Karten erfordern neue periphere Lese- und Eingabe-Geräte.

Um eine möglichst reibungslose Einführung des neuen Verfahrens zu ermöglichen, wird vorgeschlagen, zunächst, d. h. für eine Übergangszeit, die kontaktlosen Karten zusätzlich mit Kontakten derart zu bestücken, daß auch die bisherigen Lesegeräte kompatibel die Karten lesen und beschreiben können. Das ist zwar ein zusätzlicher Aufwand, der später entfallen kann, aber die Einführung und die Vorteile einer solchen erfindungsgemäßen Karte viel schneller nutzbar macht.

Die bisher beschriebenen Anwendungsbeispiele bezogen sich immer auf die Abbuchung von vorher bar, also "cash" einbezahlten Geldbeträgen.

Die neue intelligente Chipkarte ist selbstverständlich auch in der Lage, alle Probleme und Aufgaben einer Karte mit Magnetstreifenspeicher, wie sie z. B. bisher bei den meisten "Kreditkarten" üblich waren, zu lösen. Da eine einzige Karte in Zukunft als Ideallösung alle Funktionen erfüllen soll, wird ferner erfindungsgemäß, zumindest für eine Übergangszeit, ein Magnetstreifen für die bisherige Methode der Speicherung zusätzlich vorgesehen, dessen Informationen aber auch in die Chip-Speicher eingelesen werden. Die gleiche Methode gilt ebenso für Zugangs- oder Identitäts-Karten und ähnliches.

Auch hier gilt das vorher gesagte, daß nach Umstellung der "alten" Lesegeräte die zusätzlichen Magnetstreifen entfallen können.

Mit dieser zusätzlichen Ausstattung ist jedoch die lange gewünschte Umstellung der Kreditkarten auf die viel sicheren Chip-Karten leicht möglich. Fälschungen und Funktionsfehler, die jährlich Schäden in Höhe von vielen Millionen verursachen, können mit Chip-Karten vermieden werden.

Der Benutzer profitiert von seiner "Multifunktions-Karte", die er als "Credit Card" für größere Beträge (mit Rückfrage bei der Kreditkartengesellschaft) und für kleinere Beträge als "Cash Card" ohne zeitraubende und Kosten verursachende Rückfrage wie Bargeld benützen kann. Das vorher bar oder über die "Credit Card" eingezahlte Guthaben der "Cash Card" wird ohne Formalitäten "ausbezahlt". Für diese Zahlungen ist keine Offenlegung der Identität des Karteninhabers notwendig.

Da viele der gespeicherten Angaben zum Teil unter den Datenschutz fallen können, wird erfindungsgemäß weiter empfohlen, das Auslesen oder Ausdrucken der gespeicherten Daten durch einen "persönlichen Code" zu sperren. Das kann ein einfacher Zahlen-Code sein, welcher beim Kauf oder bei der ersten Einbuchung eines Betrages vom Inhaber der Karte in einen Speicher eingegeben wird und der nicht abfragbar ist. Diese Zahl ist nur ihm bekannt und muß bei jeder Einzahlung oder vor dem Ausdrucken oder der Ausgabe der Daten eingegeben werden, um Zugriff auf die Speicher zu erhalten.

Dazu genügt u. U. bereits eine zwei- oder dreistellige

Zahl, da man erfindungsgemäß durch eine Programmierung des Chips in einfacher Weise erreichen kann, daß bei wiederholter Eingabe einer falschen Code-Zahl entweder der Speicherinhalt und/oder die Funktion der Karte gelöscht oder endgültig vernichtet wird. Aber auch alle sonstigen Methoden zum Schutz der Daten sind anwendbar.

Solche Maßnahmen verhindern vor allem bei Karten, die gestohlen oder in Verlust geraten sind, daß Unbefugte die Daten erfahren können.

Fig. 1 zeigt schematisch ein Ausführungsbeispiel einer kontaktlosen Karte für Vielfachanwendungen. Auf der aus plastischem Material bestehenden Karte (1) ist ein Display (2), vorzugsweise ein LC-Display vorgesehen, welches ebenso wie der nicht dargestellte Mikroprozessor-Chip von einer Solarzellenanordnung (3) mit Strom versorgt wird. In den Bereichen (4) und (5), welche durch die ISO-Norm 7810 festgelegt sind, können ebenso wie auf der Rückseite der Karte Werbetexte und andere Beschriftungen untergebracht werden.

In **Fig.** 2 wird das Beispiel eines Ausdruckes bei einer erfindungsgemäßen Auswertung der Buchungen gezeigt. Der untere Streifen (6) zeigt 11 Buchungen, welche in Spalte 1 laufend von 01 bis 11 numeriert sind. Die Buchung 01 weist eine Einzahlung von DM 100,— in der 5. Spalte aus. In der 6. Spalte wird diese Einzahlung mit den zu diesem Zeitpunkt bestehenden Guthaben von DM 5,80 saldiert und weist daher einen Betrag von DM 105,80 in diesem Beispiel aus. In Spalte 2 ist zunächst das Datum ausgedruckt (in diesem Beispiel der 18. August 1991), an dem die Buchung als Belastung in die Karte eingetragen wurde. In der 3. Spalte ist die Kennziffer der Kostenstelle eingetragen, welcher der abgebuchte Betrag gutgebracht werden muß.

Zweckmäßigerweise wird auch eine allgemein verständliche Beschreibung der Kostenstelle, welche in der 4. Spalte aufgeführt ist, abgespeichert, um die Art der Ausgabe klar erkennen zu können. Die in der Zeile 01 gebuchte Einzahlung weist in diesem Fall als Einzahlungsort eine Einzahlungsstelle Nr. 8421 bei der Post aus. Hier könnte selbstverständlich genauso eine Einzahlungsstelle von Banken oder sonstigen Organisationen aufgeführt sein.

In Zeile 06 und 10 ist als Beispiel die Belastung für ein Ticket der S-Bahn (SB) ausgewiesen, wobei 24 den Tag, 15 die Stunde und 47 einen bestimmten Streckenabschnitt des S-Bahn-Netzes bedeuten könnte. Auf die Datumsangabe könnte man sogar zugunsten von anderen Angaben verzichten, da das Datum der Zahlung ohne weiteres auf dem Display, wie in **Fig.** 1 gezeigt, aufscheinen könnte.

Die **Fig.** 1 zeigt im übrigen, wie die Buchung 10 des Ausdruckes (6) erscheinen könnte. Dabei bedeutet links oben 910824 den 24. August 1991, die Bezeichnung SB241547, daß es sich um eine Belastung für ein S-Bahn-Ticket handelt für einen bestimmten Streckenabschnitt und für eine bestimmte Uhrzeit und der Betrag von DM 1,00 ist mit −001,00 ausgewiesen. Der auf dem Ausdruck ausgewiesene Saldo ist ebenfalls auf der Karte mit 028.90 DM. Eine solche Darstellung gestattet jederzeit eine Kontrolle, ob der Fahrpreis ordnungsgemäß entrichtet wurde.

Fig. 3 zeigt eine "Cash + Credit Card", die zusätzlich mit den Chip-Kontakten (9) ausgestattet ist. Auf der Rückseite der Karte (1) ist im Bereich (7) ein Magnetstreifen aufgebracht, so daß die Informationen auf der Karte (1) von allen herkömmlichen Lesegeräten, welche den ISO-Normen entsprechen, gelesen werden können. Normgemäß ist auch ein Bereich (8) für eine geprägte Beschriftung vorgesehen.

Dieser zusätzliche Aufwand dient lediglich einer schnelleren Einführung der neuen "Cash + Credit Card" und kann später entfallen.

Die schematisch beschriebenen Beispiele sind sowohl in Bezug auf die gespeicherten Daten als auch auf die Auswertung in keiner Art als beschränkend aufzufassen. So wäre es z. B. empfehlenswert, alle Karten mit einer Kennzahl zu versehen, die einer zentralen Abrechnungsstelle gestatten könnte festzustellen, ob mißbräuchliche Beträge eingegeben wurden, falls die Zahlungen die Einzahlungen übersteigen. Falls erforderlich, könnte auch für jede Buchung der Umsatzsteuersatz angegeben werden und ähnliches.

Patentansprüche

1. Verfahren und Einrichtungen zur Mehrfachnutzung und Auswertung von wiederaufladbaren Chip-Karten in einem Einzahlungsautomaten oder einer Leseeinrichtung, **dadurch gekennzeichnet,** daß alle Zahlungen mittels der Chip-Karte in einem nichtflüchtigen Speicher der Karte festgehalten werden und bei jedem Aufladen (Einzahlen) die vorausgegangenen Zahlungsbuchungen gelöscht und der noch verfügbare Guthabenswert mit dem eingezahlten Betrag saldiert und gespeichert wird.
2. Verfahren und Einrichtungen nach Anspruch 1, dadurch gekennzeichnet, daß in den Einzahlungsautomaten oder in der Leseeinrichtung eine Druckvorrichtung vorhanden ist und vor dem Löschen der Daten und dem Einbuchen der Einzahlung mit oder ohne vorherige Abfrage ein Ausdrucken der gespeicherten Zahlungsbuchungen in Form einer Quittung erfolgt, welche den Vorschriften der Finanzämter oder sonstiger Stellen genügen.
3. Verfahren und Einrichtung nach Anspruch 1 oder 2, dadurch gekennzeichnet, daß der zuletzt eingegebene und/oder abgebuchte Wert auf einem Display, z. B. auf einem LC-Display, auf der Karte ablesbar ist.
4. Verfahren und Einrichtungen nach Anspruch 3, dadurch gekennzeichnet, daß auf der Karte eine optoelektronische Stromversorgung vorhanden ist, z. B. Solarzellen, welche das Display und den Chip mit Strom versorgen.
5. Verfahren und Einrichtungen nach einem oder mehreren der vorstehenden Ansprüche, dadurch gekennzeichnet, daß alle Datenein- und -ausgaben kontaktlos, d. h. induktiv, kapazitiv oder optoelektronisch erfolgen.
6. Verfahren und Einrichtungen nach einem oder mehreren der vorstehenden Ansprüche, dadurch gekennzeichnet, daß neben der kontaktlosen Datenein- und -ausgabe Kontaktierungen vorhanden sind, welche den Datentransfer und/oder die Leistungsversorgung über kontaktierte Lesegeräte alternativ gestatten.
7. Verfahren und Einrichtungen nach einem oder mehreren der vorstehenden Ansprüche, dadurch gekennzeichnet, daß ein Magnetstreifensystem vorhanden ist, welches unabhängig vom Chip Informationen trägt, welche von einem Lesegerät in bekannter Art abgefragt und/oder beschrieben werden können, und in den Chip-Speichern gleichartige Informationen vorhanden sind, welche in neueren Lesegeräten das Magnetstreifensystem ent-

behrlich machen, aber zumindest die Aufgaben des Magnetstreifensystems erfüllen.

8. Verfahren und Einrichtungen nach einem oder mehreren der vorstehenden Ansprüche, dadurch gekennzeichnet, daß beim Kauf der Karte oder vor der ersten Einzahlung ein "persönlicher Code" z. B. in Form einer mehrstelligen Zahl in einen Speicher der Karte eingegeben wird, welcher weder gelöscht noch gelesen werden kann und der eine Ausgabe der gespeicherten Daten ohne vorherige Eingabe der Code-Zahl sperrt.

9. Verfahren und Einrichtungen nach einem oder mehreren der vorstehenden Ansprüche, dadurch gekennzeichnet, daß eine Programmierung des Chips bei wiederholter Eingabe einer falschen Code-Zahl den Speicherinhalt und/oder die Funktion der Karte löscht oder endgültig sperrt.

Hierzu 1 Seite(n) Zeichnungen

Nummer: DE 42 03 748 A1
Int. Cl.5: G 07 G 1/00
Offenlegungstag: 5. August 1993

Fig.1

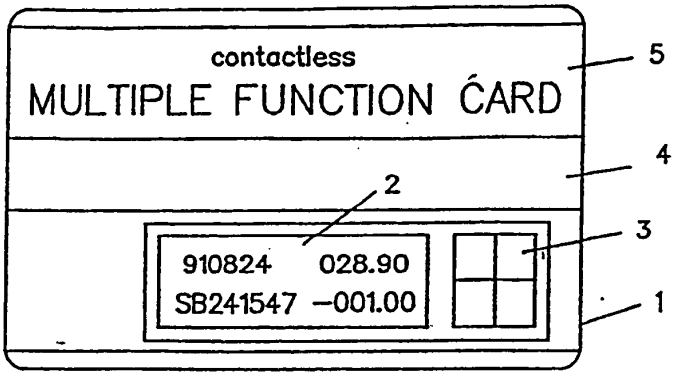

Fig.2

01	910825	0108421	POST8421	+050.00	077.70
11	910824	00010101	TELEFON	−001.20	027.70
10	910824	00010142	SB241547	−001.00	028.90
09	910822	00010101	TELEFON	−000.30	029.90
08	910821	00010126	PARKHAUS	−006.60	030.20
07	910821	00010230	BLUMEN	−020.60	036.80
06	910821	00010142	SB211447	−001.00	057.40
05	910820	00010101	TELEFON	−006.10	058.40
04	910820	00010170	GETRÄNKE	−034.00	064.50
03	910819	00010101	TELEFON	−000.30	098.50
02	910819	00010126	PARKHAUS	−007.00	098.80
01	910818	0108421	POST8421	+100.00	105.80

Fig.3

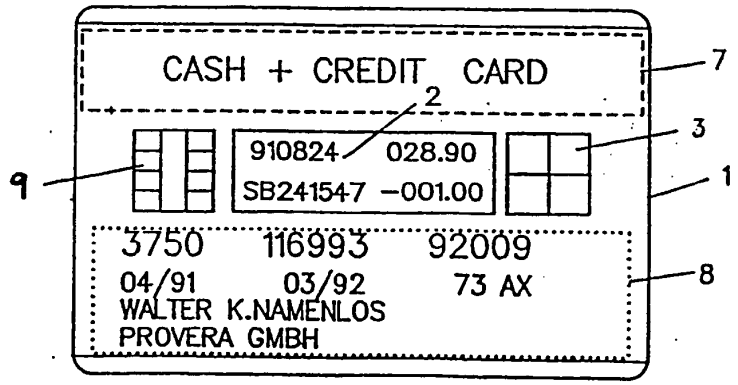

308 031/414

Best Available Copy

(19) BUNDESREPUBLIK DEUTSCHLAND

DEUTSCHES PATENT- UND MARKENAMT

(12) Offenlegungsschrift

(10) DE 101 46 804 A 1

(51) Int. Cl.[7]: G 06 K 19/07

(21) Aktenzeichen: 101 46 804.0

(22) Anmeldetag: 22. 9. 2001

(43) Offenlegungstag: 10. 4. 2003

DE 101 46 804 A 1

(71) Anmelder:

Philips Corporate Intellectual Property GmbH, 20099 Hamburg, DE

(72) Erfinder:

Riemschneider, Karl-Ragmar, Dr.-Ing., 20253 Hamburg, DE; Schwarz, Alexander, Dipl.-Ing., 20257 Hamburg, DE

Die folgenden Angaben sind den vom Anmelder eingereichten Unterlagen entnommen

(54) Verfahren und Schaltungsanordnung zum Ansteuern eines Displays sowie Chipkarte mit Display

(57) Um ein Verfahren und eine Schaltungsanordnung zum Ansteuern eines Displays, insbesondere eines Displays einer Chipkarte, bereitzustellen, mittels denen in einfacher und effizienter Weise gegebenenfalls mehrere Displaybilder aufweisende Informationen darstellbar sind, ist vorgesehen, daß

(a) in einem Schreibmodus die auf dem Display anzuzeigende Information, die wenigstens einen auf dem Display darzustellenden Informationsinhalt (Displaybild) umfaßt, in einer nur dem Display zugeordneten Ansteuerschaltung gespeichert wird;

(b) die ebenfalls im Schreibmodus wählbaren Ordnungsrelationen gespeichert werden, die explizit für jeden der Informationsinhalte zugeordnet sind und die Abfolge der Informationsinhalte bei der Anzeige bestimmen;

(c) in einem Lesemodus aus der Ansteuerschaltung die den wenigstens einen Informationsinhalt aufweisende anzuzeigende Information aufgerufen und auf dem Display zur Anzeige gebracht wird, wobei

(d) die gespeicherten und explizit zugeordneten Ordnungsrelationen für die Abfolge der Aufrufe und damit der Anzeige berücksichtigt werden.

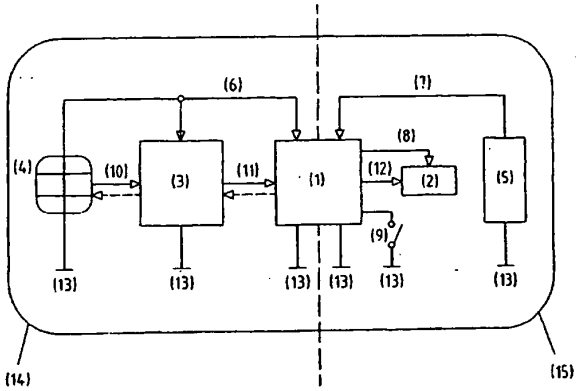

DE 101 46 804 A 1

Beschreibung

[0001] Die Erfindung betrifft ein Verfahren und eine Schaltungsanordnung zum Ansteuern eines Displays, insbesondere eines Displays einer Chipkarte, sowie eine Chipkarte mit Display.

[0002] Der Einsatz eines Displays ist bei vielen technischen Anwendungen bekannt. Im Zusammenhang mit der Erfindung wird unter Display eine Anzeigeeinrichtung verstanden, die dazu geeignet ist, eine Information darzustellen. Die Information selber besteht hierbei aus wenigstens einem auf dem Display dargestellten Informationsinhalt (Displaybild). Derartige, Informationen darstellende Displays sind bekanntermaßen mit einer eine Ansteuerschaltung für das Display aufweisenden Haupteinheit (Controller, Prozessor) verbunden. Die Haupteinheit liefert hierbei die auf dem Display darzustellenden Informationen. Entsprechend dem Aufbau des Displays werden von der Haupteinheit Ansteuersignale für das Display bereitgestellt. So werden z. B. Spannungen und Ströme zur Verfügung gestellt, die geeignet sind, einzelne Segmente des Displays derart anzusteuern, daß Symbole, Zeichen oder dergleichen auf dem Display darstellbar sind.

[0003] Reicht für eine spezielle Anwendung die Darstellung eines Displaybildes nicht aus, ist eine Aufteilung der Informationsinhalte auf mehrere Displaybilder erforderlich, die aufeinanderfolgend auf dem Display dargestellt werden. Für die Verwaltung derartiger Informationsinhalte mit mehreren Displaybildern ist bekannt, die Haupteinheit, die die Ansteuerung des Displays übernimmt, mit einer entsprechenden Software zu versehen. Hierbei ist nachteilig, daß insbesondere bei autark arbeitenden technischen Vorrichtungen, z. B. Chipkarten, für die Bearbeitung von darzustellenden Informationsinhalten und die Ansteuerung eines die Informationen darstellenden Displays eine Spannungsversorgung für die Haupteinheit zur Verfügung gestellt werden muß. Da die Haupteinheit einen relativ großen Energiebedarf besitzt, ist eine entsprechend groß dimensionierte Spannungsquelle erforderlich.

[0004] Aus der DE 196 31 557 A1 ist eine mit einem Anzeigedisplay versehene Chipkarte bekannt. Dem Display ist hierbei eine vom Chipkartenprozessor logisch und funktionell getrennte Ansteuerschaltung zugeordnet. Dem Display und der Ansteuerschaltung des Displays ist eine eigene als Solarzelle ausgebildete Spannungsversorgung zugeordnet.

[0005] Aus der FR 2 680 260 A1 ist eine Chipkarte mit einem Display bekannt, bei der Informationsinhalte in einem Stapelspeicher abgelegt sind. Somit ist eine Reihenfolge des Auslesens durch die Reihenfolge des Einschreibens, das heißt implizit, bestimmt.

[0006] Der Erfindung liegt die Aufgabe zugrunde, ein Verfahren und eine Schaltungsanordnung zum Ansteuern eines Displays, insbesondere eines Displays einer Chipkarte, bereitzustellen, mittels derer in einfacher und effizienter Weise gegebenenfalls mehrere Displaybilder aufweisende Informationen darstellbar sind.

[0007] Erfindungsgemäß wird diese Aufgabe durch ein Verfahren mit den im Anspruch 1 genannten Merkmalen gelöst. Dadurch, daß

(a) in einem Schreibmodus die auf dem Display anzuzeigende Information, die wenigstens einen auf dem Display darzustellenden Informationsinhalt (Displaybild) umfaßt, in einer nur dem Display zugeordneten Ansteuerschaltung gespeichert wird;

(b) ebenfalls im Schreibmodus wählbare Ordnungsrelationen gespeichert werden, die explizit für jeden der Informationsinhalte zugeordnet sind und die die Abfolge der Informationsinhalte bei der Anzeige bestimmen;

(c) in einem Lesemodus aus der Ansteuerschaltung die den wenigstens einen Informationsinhalt aufweisende anzuzeigende Information aufgerufen und auf dem Display zur Anzeige gebracht wird, wobei

(d) die gespeicherten und explizit zugeordneten Ordnungsrelationen für die Abfolge der Aufrufe und damit der Anzeige berücksichtigt werden,

ist vorteilhaft möglich, die anzuzeigenden Informationen derart im Schreibmodus abzuspeichern, daß jeder Informationsinhalt zumindest einen, im einfachsten Fall genau einen, Nachfolge-Informationsinhalt vorgegeben bekommt. Dieser Nachfolge-Informationsinhalt wird durch die zugeordneten, mit abgespeicherten expliziten Ordnungsrelationen als zugeordnete Referenz abgelegt. Hierdurch lassen sich einfach verkettete Listen aufbauen, bei denen die Reihenfolge des Aufrufens im Lesemodus unabhängig von der physischen Reihenfolge im Speicher ist. Es wird somit jedem Informationsinhalt (Displaybild) eine Referenz (Ordnungsrelation) zugeordnet, die auf den nächsten anzuzeigenden Informationsinhalt verweist und sich hierdurch erst die Anzeigereihenfolge auf dem Display ergibt.

[0008] Erfindungsgemäß wird die Aufgabe ferner durch eine Schaltungsanordnung mit den im Anspruch 13 genannten Merkmalen gelöst. Dadurch, daß eine nur dem Display zugeordnete Ansteuerschaltung vorgesehen ist, die in einen Schreibmodus und einen Lesemodus umschaltbar ist, wobei die Ansteuerschaltung unabhängig von einer den Schreibmodus aktivierenden und darzustellende Informationsinhalte bereitstellenden Steuerschaltung für den Lesemodus aktivierbar ist, die Ansteuerschaltung einen nichtflüchtigen Speicher umfaßt, wobei eine erste Schaltungseinheit vorgesehen ist, die der getrennten Eintragung von anzuzeigenden Informationen, die wenigstens einen auf dem Display darzustellenden Informationsinhalt umfassen, dient, indem der anzuzeigenden Information entsprechende Informationsinhalte und diesen zugeordnete explizite Organisationsrelationen getrennt abspeicherbar sind, und eine zweite Schaltungseinheit vorgesehen ist, die dem Auslesen der anzuzeigenden Informationen und der zugeordneten Organisationsrelationen dient, wobei die zweite Schaltungseinheit über ein Schaltmittel aktivierbar ist, läßt sich vorteilhaft eine Schaltungsanordnung bereitstellen, die in einfacher Weise flexibel an unterschiedliche darzustellende Informationen anpaßbar ist, wobei insbesondere durch die einfache Struktur der Schaltung ein notwendiger Energiebedarf gering gehalten werden kann.

[0009] Bevorzugte Ausgestaltungen der Erfindung ergeben sich aus den in den Unteransprüchen genannten Merkmalen.

[0010] Insgesamt lassen sich durch die erfindungsgemäßen Ausgestaltungen des Verfahrens und/oder der Schaltungsanordnung zum Ansteuern eines Displays Anzeigefunktionen ohne aktiv werdende Haupteinheit (Controller, Prozessor) selbständig durchführen. Durch die Strukturierung mittels der expliziten Ordnungsrelationen genügen wenige interne Schaltoperationen in der dem Display zugeordneten Ansteuerschaltung, so daß trotz der Möglichkeit, mehrere Informationsinhalte (Displaybilder) anzeigen zu können, deren Abfolge anwendungsgerecht organisiert werden kann, wobei hier lediglich der den Lesemodus organisierende Schaltungsbestandteil der Ansteuerschaltung aktiv ist, so daß ein Energiebedarf äußerst gering ist.

[0011] Schließlich lassen sich mit dem Verfahren und der Schaltungsanordnung flexibel unterschiedliche Applikationen unterstützen, d. h. z. B. in Umfang und Organisation der

Abfolge der anzuzeigenden Informationen variabel zu sein, Informationsinhalte der anzuzeigenden Informationen schnell hinzufügen, auswechseln, ändern oder entfernen zu können.

[0012] Eine Verbindung der Ansteuerschaltung des Displays zur Haupteinheit (Controller, Prozessor), insbesondere zum Empfang der darzustellenden Informationen im Schreibmodus, läßt sich in einfacher Weise realisieren.

[0013] In besonders bevorzugter Ausgestaltung der Erfindung ist vorgesehen, daß das Verfahren und die Schaltungsanordnung zum Ansteuern eines Displays bei einer ein Display aufweisenden Chipkarte (Geldkarte) realisiert werden. Durch die einfache Struktur der Schaltungsanordnung und die einfache Handhabung des Verfahrens können die Anforderungen, welchen eine Chipkarte mit Display in einem Karten-Terminal, in einem neutralen Ruhezustand und bei einer Nutzeraktion unabhängig vom Karten-Terminal gerecht werden muß, optimal realisiert werden.

[0014] Im Karten-Terminal führt die Haupteinheit (Controller, Prozessor) der Chipkarte in der Regel umfangreiche und komplizierte Operationen durch, z. B. um Kommunikationsprotokolle abzuwickeln oder um Verschlüsselungsalgorithmen zu berechnen. In diesem Zustand werden die Grundlagen der Informationen erzeugt oder maßgeblich verändert, die der Nutzer auf dem Display zur Kenntnis nehmen will. Insbesondere betreffen diese Informationen Zahlenwerte von Auf- oder Abbuchungen oder Zeitangaben bei elektronischen Zeitstempelvorgängen im Karten-Terminal.

[0015] Im neutralen Ruhezustand, der den größten Teil der Lebensdauer einer Chipkarte umfaßt, liegen keine Aktivitäten vor. Die Chipkarte wird in diesem Zustand vom Nutzer nur für eine spätere Benutzung mitgeführt, zu der sie aus dem Ruhezustand in einen der aktiven Zustände aufgeweckt wird. Andererseits begibt sich die Chipkarte nach einem zu definierenden Abschluß der Aktivität – in der Regel nach einer bestimmten Zeitspanne oder nach Entfernen aus dem Karten-Terminal – selbständig in den neutralen Ruhezustand.

[0016] Bei einer Nutzeraktion ohne Karten-Terminal, welche durch das Display der Chipkarte erfolgt, tritt der Nutzer unmittelbar mit der Chipkarte in Kommunikationsbeziehung. Die erfindungsgemäße Schaltungsanordnung und das erfindungsgemäße Verfahren zum Ansteuern eines Displays gestatten es, diesen Anforderungen gerecht zu werden, indem die Ansteuerschaltung für das Display so ausgelegt ist, daß diese unabhängig voneinander arbeitende Schaltungseinheiten aufweist, die unabhängig voneinander den Schreibmodus und den Lesemodus organisieren können. Der Schreibmodus und der Lesemodus arbeiten zu verschiedenen Zeiten mit den jeweils zugeordneten Schaltungseinheiten und kommunizieren hierbei mit einem gemeinsamen Speicherbereich der Ansteuerschaltung.

[0017] Im erfindungsgemäß vorgesehenen Schreibmodus, welcher insbesondere im Chipkarten-Terminal im Zusammenhang mit einer Transaktion, Authentisierung oder dergleichen eingenommen wird, werden die expliziten Ordnungsrelationen und die Informationsinhalte mehrerer Displaybilder eingespeichert. Je nach Ausstattung der Chipkarte kann dieses Einspeichern kontaktgebunden oder kontaktlos erfolgen. Die eingeschriebenen Informationsinhalte und Ordnungsrelationen werden in einem Speicher der Ansteuerschaltung des Displays nichtflüchtig, das heißt unabhängig vom Betrieb im Chipkarten-Terminal, abgelegt. Bei dem Speicher handelt es sich vorzugsweise um einen EEPROM-Speicher oder nach einer bevorzugten anderen Ausgestaltung der Erfindung um einen RAM-Speicher. Insbesondere ist der RAM-Speicher in CMOS-Technik ausgeführt, da dieser so mit einer extrem niedrigen Stromaufnahme realisiert werden kann. Die benötigte Betriebsspannung kann durch eine einfach zu strukturierende interne Energiequelle geliefert werden. Derartige nichtflüchtige Speicher sind in der Lage, die Informationsinhalte der Displaybilder und die Ordnungsrelationen zumindest in einem der normalen Lebensdauer der Chipkarten entsprechenden Zeitraum zu speichern.

[0018] In bevorzugter Ausgestaltung der Erfindung ist vorgesehen, daß der Speicher logisch in Form von zwei Tabellen organisiert ist, wobei eine erste Tabelle für Informationsinhalte der Displaybilder verwendet wird. Die Daten jedes Informationsinhaltes jedes Displaybildes werden als Eintrag der ersten Tabelle (nachfolgend Record-Tabelle genannt) gespeichert. In einer zweiten Tabelle wird die Abfolge der Anzeige der Informationsinhalte organisiert und die zugehörigen expliziten Ordnungsrelationen gespeichert. Dies geschieht im einfachsten Falle dadurch, daß in der zweiten Tabelle (nachfolgend Referenztabelle genannt) zu jedem Eintrag der Tabellenindex des nächsten anzuzeigenden Informationsinhaltes (Displaybild) eingetragen wird. Der Eintrag dieser Referenztabelle bildet eine Referenz auf mindestens einen Nachfolger.

[0019] Auf die Einträge der Record-Tabelle und der Referenztabelle wird stets mit einem und demselben Index zugegriffen. Die Einträge der beiden Tabellen selbst können jedoch verschieden umfangreich in ihrer Größe sein. Die Größe der Einträge der Record-Tabelle hängt vom Umfang eines Displaybildes ab, während die Größe der Einträge der Referenztabelle von der für die Größe der Tabellen notwendigen Indexlänge abhängt. Bei mehr als einem Nachfolgeindex pro Eintrag in der Referenztabelle, von denen stets einer durch bestimmte Signale oder Zustände ausgewählt wird, erhöht sich der Speicherplatz eines Eintrages entsprechend.

[0020] Im erfindungsgemäßen Lesemodus, der unabhängig vom Chipkarten-Terminal eingenommen werden kann, wird der Speicher ausgelesen. Hierbei werden durch Betätigen des Schaltmittels die Informationsinhalte der Displaybilder in der durch die Ordnungsrelationen vorgegebenen eingespeicherten Reihenfolge nacheinander angezeigt. Hierbei wird der Tabellenindex in einem Adressierungsregister, beginnend mit einem Anfangswert, an beiden Tabellen als Speicheradresse angelegt. Aus der Referenztabelle wird der dadurch aktuell adressierte Eintrag ausgelesen und den Ansteueranschlüssen des Displays zugeführt. Es ist klar, daß die hierdurch generierten Signale dem tatsächlich vorhandenen Display (Matrix, 7-Segment-Ziffern, alphanumerische Anzeigen oder dgl.) angepaßt sind.

[0021] Soll das nächste Displaybild zur Anzeige kommen, wird in das Adressierungsregister der Inhalt des aktuell adressierten Eintrages der Referenztabelle übernommen. Bei mehreren eingespeicherten Nachfolgeindizes wird nach weiterer bevorzugter Ausgestaltung der Erfindung der dabei ausgewählte Index im Eintrag selektiert. Der Vorgang der Übernahme in das Adressierungsregister erfolgt entweder auf ein externes Signal hin, z. B. durch Betätigen des Schaltmittels, oder selbständig nach Ablauf einer vorgebbaren Zeitspanne.

[0022] Es wird deutlich, daß somit auch bei relativ kleinen Displays, z. B. bei Chipkarten, relativ umfangreiche Informationsinhalte durch eine Folge von Displaybildern dargestellt werden können. Besonders vorteilhaft ist die Einschränkung der Schaltungsaktivität im Lesemodus auf wenige aktive Teile der Ansteuerschaltung des Displays. Die Abläufe für das Fortschalten der Abfolge der Informationsinhalte (Displaybilder) beschränken sich auf das Auslesen von einzelnen Tabelleneinträgen aus dem Speicher, auf in größeren Zeitabständen erfolgende Übernahmen aus der Referenztabelle in das Adressierungsregister sowie die Adres-

sierung des Speichers, ausgehend vom aktuellen Inhalt des Adressierungsregisters.

[0023] Somit lassen sich einfache Schaltungen mit klarer Struktur und niedrigem Energiebedarf realisieren. Eine Anbindung der Ansteuerschaltung des Displays an eine Haupteinheit (Controller, Prozessor) der Chipkarte kann durch serielle Verbindung oder einen seriellen Datenbus erfolgen. In bevorzugter Ausgestaltung der Erfindung ist vorgesehen, daß ein Busprotokoll nach dem I^2C-Standard mit Zweidrahtverbindung zwischen Haupteinheit und Ansteuerschaltung des Displays vorgesehen ist.

[0024] Durch die Auftrennung der Schaltungsbestandteile der Schaltungsanordnung für den Schreibmodus und den Lesemodus läßt sich insbesondere die interne Energiequelle auf den Energiebedarf im Lesemodus begrenzen, da während des Schreibmodus eine Ankopplung der Chipkarte an das Chipkarten-Terminal erfolgt und über dieses mit der notwendigen Energie versorgt werden kann. Somit lassen sich durch das hier größere Energieangebot im Schreibmodus der Ansteuerschaltung auch umfangreichere, komplexere Operationen der Ansteuerschaltung des Displays auslösen. So läßt sich z. B. die modulare Gestaltung des Protokolls der Schnittstelle zwischen Haupteinheit und Ansteuerschaltung des Displays auf einer höheren, logischen Ebene unterstützen. Die Haupteinheit kann durch eine geeignete Auslegung der Software auch von der Struktur her kompliziertere Ordnungsrelationen für die Informationsinhalte als eine einfache fortlaufende Reihenfolge organisieren. Diese Ordnungsrelationen können insbesondere applikationsbezogen erzeugt, verändert und dann in die Referenztabelle initialisierend eingetragen werden.

[0025] Durch die erfindungsgemäß vorgesehene explizite Speicherung der Ordnungsrelationen in der Referenztabelle wird eine schnelle Operation für die Informationsinhalte der einzelnen Displaybilder unterstützt. Hierdurch ist ein zusätzlicher Zeitbedarf im Schreibmodus, als dieser eigentlich während einer Kommunikation der Chipkarte mit dem Chipkarten-Terminal zur Verfügung steht, nicht notwendig. Bei den expliziten festgelegten Ordnungsrelationen ist ein beliebiges Entfernen nur mit dem Aufwand der Veränderung der Nachfolgereferenz des bzw. der Vorgänger verbunden. Es werden dort die Nachfolger des zu entfernenden Eintrages der Record-Tabelle eingetragen. Auch ein Umordnen der Informationsinhalte der Displaybilder, die in der Record-Tabelle abgelegt sind, betrifft nur die Referenztabelle. Da diese typischerweise wesentlich kleiner im Datenumfang ist als die Record-Tabelle, ist eine einfachere und schnellere Handhabung gegeben.

[0026] Das Einfügen der Informationsinhalte von Displaybildern kann ebenfalls sehr vorteilhaft an beliebiger Stelle der Record-Tabelle, ohne Verschieben des nachfolgenden Teils der Record-Tabelle, erfolgen. Dies bedeutet, ein vollständiges Auslesen und Wiedereinspeichern des Dateninhaltes der gesamten Record-Tabelle entfällt somit. Hierzu wird der einzufügende Informationsinhalt (Displaybild) an einen freien oder frei werdenden Eintrag der Record-Tabelle geschrieben. Das eigentliche Einfügen erfolgt durch wenige Einträge in der die Ordnungsrelationen speichernden Referenztabelle. Auch eine zyklische Verkettung der Informationsinhalte ist dadurch möglich, daß ein Eintrag als sein eigener direkter oder indirekter Nachfolger referenziert wird. Dies kann direkt über das Einschreiben des aktuellen Index in den aktuellen Referenzeintrag geschehen. Indirekt entsteht eine zyklische Verkettung dadurch, daß ein späterer Referenzeintrag in der Kette der Nachfolger wiederum auf den aktuellen Eintrag referenziert.

[0027] Nutzt man die Record-Tabelle und Referenztabelle als Basis für den Aufbau einer dynamischen Datenstruktur, lassen sich bevorzugt einfach oder doppelt verkettete Listen, Bäume, zyklische Erweiterungen davon und andere Organisationsformen gestalten. Die gewählte Struktur mit Record-Tabelle und Referenztabelle gestattet jedoch auch eine einfache Datenorganisation. Hierzu kann vorzugsweise mit einer Initialisierungsroutine einmalig eine feste Reihenfolge in der Referenztabelle hergestellt werden. Vorzugsweise kann anfänglich als jeweiliger Nachfolger der nächste Eintrag fest eingetragen werden. Diese Datenorganisation wird von der Haupteinheit (Controller, Prozessor) vorgenommen und ist entsprechend der gewünschten Applikation mit großem Freiheitsgrad wählbar.

[0028] In weiterer bevorzugter Ausgestaltung der Erfindung ist eine Fehlerbehandlung vorgesehen. Hierdurch können unterbrochene und unvollständige Datentransaktionen mit dem Chipkarten-Terminal entweder angezeigt und/oder für eine nachträgliche Korrektur gekennzeichnet werden. Hierbei läßt sich ein willkürlich zufälliger Abbruch von Transaktionen, insbesondere durch vorzeitige Entnahme der Chipkarte aus dem Chipkarten-Terminal, berücksichtigen. Hierdurch können Operationen im erfindungsgemäßen Schreibmodus in den Speicher der Ansteuerschaltung möglicherweise nicht abgeschlossen sein. Ein Validierungssemaphore (valid flag), welches vor dem Beginn des Schreibens zurückgesetzt wird und nach Abschluß und gegebenenfalls nach Prüfung durch Lesen und Vergleich des Schreibens wieder gültig gesetzt wird, kann nicht bemerkte Fehler dieser Entstehungsart verhindern.

[0029] Ferner ist in bevorzugter Ausgestaltung der Erfindung vorgesehen, daß für die Kommunikation der Ansteuerschaltung mit der Haupteinheit (Controller, Prozessor) ein generelles Fehlerschutz- oder Fehlerbehandlungsverfahren für die Kommunikation zwischen Ansteuerschaltung und Haupteinheit vorgesehen ist, das sich vorzugsweise durch einen geringen Aufwand auszeichnet. Dieses kann sich z. B. auf das Erkennen von Prozeß-Synchronisationsproblemen durch äußere Ereignisse mittels an sich bekannter Semaphoren-Mechanismen beziehen.

[0030] Ferner ist bevorzugt durch zusätzliche Sperrzeiten bis zur beidseitigen Gültigsetzung nach der letzten Übertragung zwischen Haupteinheit (Controller, Prozessor) und Ansteuerschaltung des Displays bzw. Chipkarten-Terminal der vollständige Abschluß von Operationen sichergestellt. Hierdurch wird vorteilhaft erreicht, daß die Gültigkeit von Übertragungsoperationen durch Semaphoren-Zustände signalisiert werden kann. Vor Beginn einer neuen Transaktion ist der gültige Abschluß der letzten Transaktion geprüft und im Fall der Ungültigkeit geeignet reagiert worden, z. B. durch wenigstens einen Wiederholungsversuch. Auch die bevorzugt vorgesehene Fehlerbehandlung wird von der konkreten Anwendung bestimmt, insbesondere ob und in welchem Umfang sie erfolgen soll.

[0031] So kann in weiterer bevorzugter Ausgestaltung der Erfindung vorgesehen sein, daß auf die Fehlerbehandlung durch initialisierende Einträge in einer anfänglichen Schreiboperation auch dann verzichtet werden kann, wenn diese im Lesemodus durch die Schaltungsanordnung fest vorgesehen sind. Insbesondere kann vorgesehen sein, daß duplizierte Tabelleneinträge für den Fehlerfall, aber auch für die Normalfunktion, die Fehlerbehandlung umgehen können.

[0032] In weiterer bevorzugter Ausgestaltung der Erfindung ist vorgesehen, daß für die Durchführung des Lesemodus wenigstens eine sich verbrauchende und/oder kontinuierlich regenerierbare interne Energiequelle vorgesehen ist. Eine sich verbrauchende Energiequelle kann z. B. von einer Primärbatterie gebildet sein. Eine regenerierbare Energiequelle kann z. B. eine Solarzelle oder ein Piezokristall sein.

Insbesondere ein Piezokristall bietet die Möglichkeit, daß durch Betätigung eines Schaltmittels, z. B. des Schaltmittels zum Aktivieren des Lesemodus, die Erzeugung der benötigten elektrischen Energie ausgelöst werden kann. Hierdurch ergibt sich ein sehr kompakter, robuster Aufbau der Schaltungsanordnung. Insbesondere beim Einsatz in Chipkarten ergeben sich hierdurch sehr vorteilhafte Anwendungsmöglichkeiten. Nach weiteren bevorzugten Ausgestaltungen kann als regenerierbare Energiequelle auch ein Akkumulator eingesetzt sein, der z. B. während eines Chipkarten-Terminalbetriebes schnell aufladbar ist. Schließlich ist in einer bevorzugte Ausführungsvariante die regenerierbare Energiequelle durch einen Kondensator gebildet, der in der Lage ist, über eine hinreichend lange Zeit Energieladungen zu speichern. Selbstverständlich kann nach weiteren bevorzugten Ausgestaltungen der Erfindung wenigstens eine der sich verbrauchenden und/oder wenigstens eine der regenerierbaren Energiequellen kombiniert sein.

[0033] Weitere bevorzugte Ausgestaltungen der Erfindung ergeben sich dadurch, daß zumindest Teile der Schaltungsanordnung zum Ansteuern des Displays in einer oder mehreren Schichten des Displays oder in einem in das Display integrierten Schaltkreis strukturiert sind. Hierfür können bevorzugt die an sich bekannten "Chip-on-glas"- oder "Chip-on-plastics"-Herstellungsverfahren Anwendung finden. Ferner sind bevorzugt in Flächen neben und/oder zwischen den Anzeigeelementen des Displays die Ansteuerschaltung oder zumindest Teile der Ansteuerschaltung integriert. Ferner ist denkbar, die Schaltungsanordnung aufzuteilen, d. h. zumindest eine Schaltungseinheit, insbesondere die die Record-Tabelle und/oder Referenztabelle bildenden Schaltungsbestandteile, in der Nähe des Displays zu integrieren.

[0034] In weiterer bevorzugter Ausgestaltung der Erfindung ist vorgesehen, daß die Schaltungsanordnung zum Ansteuern des Displays im Schreibmodus eine Taktversorgung aus dem Chipkarten-Terminal erhält und im Lesemodus eine interne Taktversorgung, insbesondere durch einen Oszillator, erzeugt wird. Auf den internen Oszillator zur Taktversorgung kann insbesondere dann verzichtet werden, wenn der Lesemodus ohne eigenen Taktoszillator realisiert ist, indem externe Signale, insbesondere die Betätigung des Schaltmittels, jeweils einen den nächsten Zustand definierenden Impuls liefern. Hierdurch läßt sich die Schaltungsanordnung besonders einfach realisieren.

[0035] Die erfindungsgemäßen Chipkarten mit Display können z. B. als elektronische Geldbörse (Geldkarte), Scheck- und/oder Kreditkarte, Kundenkarte, Rabattkarte, Loyalitätskarte, Telefonkarte, Krankenversicherungskarte, Tankkarte, Identifikationskarte, Guthabenkarte für mobiles Telefonieren oder dergleichen eingesetzt werden. Den Karteninhabern wird über das Display eine Zusatzinformation zur Verfügung gestellt, die z. B. die mit der Karte erfolgten Transaktionsvorgänge unmittelbar transparent macht. Weitere bevorzugte Anwendungen bestehen z. B. darin, daß die Gültigkeit von Eintrittskarten, Fahrkarten, Tages-, Wochen- oder Monatskarten oder dergleichen von entsprechenden Automaten auf eine erfindungsgemäße Chipkarte mit Display übertragen werden und für den Nutzer nachvollziehbar ist. Eine derartige Gültigkeit bzw. Herstellung einer derartigen Gültigkeit kann vorzugsweise mit einer automatisierten Zahlungsfunktion, z. B. durch Abbuchung eines entsprechenden Wertes in einem Chipkarten-Terminal, verbunden sein. Neben dem Erkennen einer Gültigkeit kann auch vorgesehen sein, eine Entwertung bzw. Teilentwertung der vorhandenen Gültigkeiten zu dokumentieren und einem Nutzer oder einer befugten Kontrollperson der Karte mit Display auf dessen Anforderung hin sichtbar zu machen. Ferner ist bevorzugt möglich, die erfindungsgemäßen Chipkarten mit Zusatzinformationen zu versehen, z. B. Platzreservierungen, Zeitangaben, Anschlußfahrten bei Verkehrsmitteln, Verkehrshinweise, Wetterhinweise, Werbungshinweise oder dergleichen zu integrieren. Auf dem Display anzeigbare Informationen können z. B. zusätzlich durch eine Zugangssicherung, die vorzugsweise mit der Chipkarte kombiniert ist, gesichert werden. Diese kann z. B. durch Vorsehen einer bestimmten Eingabe-Kombination oder Eingabe-Sequenz oder ein biometrisches Merkmal realisiert werden. Bei biometrischen Merkmalen lassen sich die erfindungsgemäßen Chipkarten auch z. B. als Legitimationskarten (Ausweis, Paß oder dergleichen) nutzen.

[0036] Schließlich ist in weiterer bevorzugter Ausgestaltung der Erfindung vorgesehen, das erfindungsgemäße Verfahren der erfindungsgemäßen Schaltungsanordnung zum Ansteuern eines Displays bei Ansteuerschaltungen für Displays in bzw. an mobilen Geräten oder Anlagen anzuwenden. Eine derartige Anwendung ist z. B. bei Mobiltelefonen oder drahtlosen Festnetztelefonen gegeben, bei denen neben deren eigentlichen Funktionen Zusatzfunktionen realisiert werden können, die im Lesemodus des Verfahrens mit geringem Energiebedarf auskommen. Dies können z. B. Telefonbuchanzeigen, unabhängige Anzeigen von SMS-Nachrichten oder dergleichen sein. Somit könnten derartige Informationen auf dem Display auch noch dann angezeigt werden, wenn durch entladenen Hauptakkumulator die eigentlichen Funktionen derartiger Geräte nicht mehr nutzbar sind.

[0037] Ferner ist vorteilhaft möglich, die im Lesemodus abrufbaren Zusatzinformationen in den Zeiträumen bereitzustellen, in denen die mobilen Geräte sich in einem Ruhezustand (Stand-by-Zustand) befinden. Somit wäre zum Anzeigen der Zusatzinformationen eine Aktivierung der Hauptenergieversorgung der mobilen Geräte nicht erforderlich.

[0038] Weitere bevorzugte Anwendungsmöglichkeiten der Erfindung ergeben sich beim Einsatz von Fernbedienungen für elektronische Geräte, z. B. der Heimelektronik, insbesondere zum Anzeigen von Bedienfunktionen oder Quittiersignalen der fernbedienbaren Geräte. Weitere bevorzugte Anwendungen ergeben sich bei sog. Pagern, Telefonen, elektronischen Autoschlüsseln, Warenerfassungsgeräten, elektronischen Spielzeugen oder dergleichen. Darüber hinaus ist eine bevorzugte Anwendung bei Meßgeräten gegeben. Hier könnten auf dem Display eine durch das Meßgerät aufgenommene Messung, Meßreihe oder dergleichen auch ohne Vollfunktion des Meßgerätes ausgelesen werden. Beispielhaft seien hier Energiezähler, Alarmanlagen, Bordrechner, Zahlungs-Terminals, Beschleunigungs- und Strahlungs-Protokollgeräte, Dosimeter, chemische Instrumente, medizinische Instrumente oder dergleichen genannt.

[0039] Zusammenfassend läßt sich feststellen, daß das erfindungsgemäße Verfahren und die erfindungsgemäße Schaltungsanordnung bei Geräten Einsatz finden können, bei denen Informationen oder Zusatzinformationen zur Anzeige gebracht werden sollen, ohne die eigentliche Gerätefunktion bzw. dessen Netzversorgung zu aktivieren, oder wenn diese unterbrochen ist. Nach allem wird klar, daß das erfindungsgemäße Verfahren bzw. die erfindungsgemäße Schaltungsanordnung eine separate Display-Ansteuerung gestattet, welche im Schreibmodus Informationsinhalte für eine oder mehrere Displaybilder übernimmt und im Lesemodus die Informationsinhalte für einen oder mehrere Displaybilder ausgibt. Für die Abfolge der Displaybilder wird eine explizite Speicherung der Ordnungsrelationen der Displaybilder in der Referenztabelle des Speichers realisiert. Die Fortschaltung in der Abfolge selbst kann durch Nutzer-

interaktion oder zeitgesteuert selbständig erfolgen. Die Steuerung der Fortschaltung benutzt die eingetragenen Ordnungsrelationen in der Referenztabelle, um das jeweils nächste Displaybild zu ermitteln. Die für den Lesemodus benötigte Schaltung verwendet die Einträge in der Referenztabelle des Speichers hierbei unmittelbar. Sie ist daher einfach strukturiert und energiesparend aufgebaut. Durch eine geeignete Organisationsform der explizit festzulegenden Ordnungsrelationen können kurze Daten-Transferzeiten im Schreibmodus realisiert werden.

[0040] Weitere bevorzugte Ausgestaltungen der Erfindung ergeben sich aus den übrigen, in den Unteransprüchen genannten Merkmalen.

[0041] Die Erfindung wird nachfolgend in Ausführungsbeispielen anhand der zugehörigen Zeichnungen näher erläutert. Es zeigen:

[0042] **Fig.** 1 ein Übersichtsschaltbild einer typischen kontaktbehafteten Chipkarte mit Display;

[0043] **Fig.** 2 ein Blockschaltbild der Display-Ansteuerschaltung im Schreibmodus;

[0044] **Fig.** 3 ein Blockschaltbild der Display-Ansteuerschaltung im Lesemodus;

[0045] **Fig.** 4 eine schematische Darstellung der Abläufe in den Betriebsarten und der Speicherorganisation;

[0046] **Fig.** 5 den Ablauf des Löschens eines Displaybildes aus einer Abfolge;

[0047] **Fig.** 6 den Ablauf des Einfügens von Displaybildern in einer einfachen Referenzliste;

[0048] **Fig.** 7 ein Beispiel einer Datenstruktur bei einer Geldbörsen-Chipkarte mit Display;

[0049] **Fig.** 8 eine Anwendung der Ansteuerung in einer kontaktlosen Chipkarte und

[0050] **Fig.** 9 eine Anwendung der Ansteuerung in einer kontaktlosen Chipkarte und die Aufladung der internen Energiequelle.

[0051] **Fig.** 1 stellt das Übersichtsschaltbild einer typischen kontaktbehafteten Chipkarte mit Display dar. Dabei ist zentral eine Display-Ansteuerschaltung **1** gezeigt. Rechts daneben dargestellt ist ein Display **2**, links davon ein Chipkarten-Controller **3** und ein Kontaktfeld **4**. Am rechten Rand ist eine interne Energiequelle **5** symbolisiert, die z. B. eine Batterie, ein Akkumulator oder eine Solarzelle ist. Vom Kontaktfeld **4** verlaufen Leitungen **6** für die Betriebsspannungs- und Taktversorgung zum Chipkarten-Controller **3** und zur Display-Ansteuerschaltung **1**.

[0052] Die interne Betriebsspannung wird über eine Verbindung **7** von der Energiequelle **5** zur Ansteuerschaltung **1** geführt und gegebenenfalls von dort unter Anpassung an die Display-Technologie über eine Leitung **8** dem Display **2** zugeleitet.

[0053] An der Ansteuerschaltung **1** ist ein Taster **9** (Schaltmittel – z. B. eine Schnappscheibe oder ein Flächentaster –) angeschlossen.

[0054] Die Informationen aus dem Chipkarten-Terminal werden vom Kontaktfeld **4** zum Controller **3** über Datenleitungen **10** übertragen; typisch werden serielle Übertragungsformate genutzt. Ebenso erfolgt darüber in zahlreichen Applikationen ein Datenfluß in entgegengesetzter Richtung. Informationen vom Chipkarten-Controller **3** zur Ansteuerschaltung **1** werden nur im Schreibmodus eingetragen, dies geschieht über eine Datenverbindung **11**, die z. B. für eine serielle Übertragung oder mit einem Busprotokoll benutzt wird. Nur das Lesen von Statusinformationen oder Ausleseoperationen (z. B. für Kontrollzwecke) haben eher als Ausnahme die entgegengesetzte Datenrichtung. Von der Display-Ansteuerschaltung **1** werden über Steueranschlüsse **12** die Segmente des Displays bedient. Alle Baugruppen besitzen eine gemeinsame Masseverbindung **13**.

[0055] Der gemäß Darstellung linke Schaltungsteil **14** bis zur Mitte ist in der Betriebsart Schreibmodus aktiv, der rechte Schaltungsteil **15** ist in der Betriebsart Lesemodus aktiv. Nur die Ansteuerschaltung **1** hat eine Funktion in beiden Betriebsarten. Dieses wird in den nachfolgenden Zeichnungen detaillierter dargestellt.

[0056] **Fig.** 2 und 3 stellen das Blockschaltbild der Display-Ansteuerschaltung **1** dar. Die Lage auf der Zeichnung symbolisiert eine Aufteilung in Komponenten nur für den Schreibmodus (links) und nur für den Lesemodus (rechts). In der Mitte sind Komponenten dargestellt, die in beiden Modi gebraucht werden.

[0057] Die Betriebsspannungen werden durch Aufbereitungsschaltungen **17** oder **18** zugeführt, jeweils eine für die Terminal-Versorgungsspannung **22** oder eine interne Quelle **23**.

[0058] Die Terminal-Versorgungsspannung **22** wird im Schreibmodus genutzt und versorgt dann einen nichtflüchtigen EEPROM-Speicher **16** und eine Steuerschaltung **19** des Schreibmodus. Diese übernimmt Daten vom Controller und führt diese über eine Umschaltlogik **26** – hier schematisch als Schalter dargestellt – dem EEPROM **16** zu. Sie läßt aber auch einzelne Leseoperationen zu, etwa zu Kontrollzwekken oder um eingetragene Fehlerzustände zur Fehlerbehandlung zu übernehmen. Die Umschaltlogik wird von der Terminal-Versorgungsspannung **22** über ein Steuersignal **25** betätigt, so daß der Schreibmodus bei anliegender Terminal-Versorgungsspannung **22** stets aktiv ist. Der Lesemodus kann nur dann eingenommen werden, wenn keine Terminal-Versorgungsspannung **22** anliegt.

[0059] Auf der rechten Seite sind eine Steuerschaltung **20** für den Lesemodus und eine Treiberschaltung **21** für die Display-Leitungen dargestellt, welche die Display-Segmente ansteuern. Diese werden von der internen Energiequelle **23** über die Aufbereitungsschaltung **18** im Lesemodus versorgt.

[0060] Dieser Schaltungsblock kann außerdem die Steuerung des Einnehmens des Schlafzustandes mit minimalem Energieverbrauch und das Aufwecken daraus übernehmen. Im Schlafzustand werden auch die bisher im Lesemodus versorgten Schaltungsblöcke abgeschaltet.

[0061] Um aus dem Schlafmodus in den Lesemodus aufgeweckt zu werden, ist die Schaltung mit einem Schaltmittel (Taster) **24** verbunden. Wird der Taster **24** eine vorgebbare Zeit im Lesemodus nicht betätigt, wird wieder in den Schlafmodus übergegangen.

[0062] **Fig.** 3 stellt schematisch die Umschaltung der Umschaltlogik **26** in den Lesemodus dar. Hier ist der EEPROM-Speicher **16** von der Steuerschaltung des Schreibmodus **19** an die Steuerschaltung des Lesemodus **20** umgeschaltet. Die Schaltungsblöcke entsprechen ansonsten denen der **Fig.** 2.

[0063] **Fig.** 4 zeigt eine schematische Darstellung der Abläufe in den Betriebsarten und der Speicherorganisation. Es wird gezeigt, daß die Ordnungsrelation und die Inhalte im Schreibmodus eingetragen werden. Der EEPROM-Speicher **16** der Display-Ansteuerschaltung **1** ist in eine Tabelle der Referenzen (links – nachfolgend auch Referenztabelle genannt –) und eine Tabelle für die Displaybilder (rechts – nachfolgend auch Record-Tabelle genannt –) gegliedert. Im Lesemodus werden Referenzen ausgelesen, als neuer Index nach einem Tastendruck verwendet und außerdem das aktuell indizierte Displaybild zum Display hin weitergeleitet. In **Fig.** 4 werden folgende Angaben verwendet: S = Schreibmodus, L = Lesemodus, OB = Ordnung der Bilder, IB = Informationen der Bilder, AB = Aktuelles Bild, I = Index und NJ = Nächster Index.

[0064] **Fig.** 5 stellt den Ablauf des Löschens eines der Displaybilder, die bezüglich ihrer Abfolge in einer einfa-

chen Referenzliste auf das jeweils nächstfolgende organisiert sind, dar. Dabei verdeutlicht sich der geringe Aufwand, es findet nur eine Schreiboperation in der Referenzliste statt. Es entsteht keine Lücke in der Referenzliste, sie kann weiterhin ohne Sonderbehandlung von gelöschten Einträgen entlang der Ordnungsrelationen (Referenz zum nächsten Element) durch die Schaltung des Lesemodus ausgelesen werden.

[0065] Im oberen Teil der **Fig.** 5 ist der Zustand vor dem Löschen und unten der Zustand nach dem Löschen für einen Ausschnitt der Record-Tabelle gezeigt. Dabei werden zunächst drei Displaybilder **27, 28** und **29** mit den zugehörigen Referenzen **30, 31** und **32** gezeigt. Sie sind so verkettet, daß dem **Bild** 27 das **Bild** 28 folgt und dieses in der Abfolge vom **Bild** 29 abgelöst wird. Die Pfeile symbolisieren die Verkettung.

[0066] Soll nun exemplarisch das mittlere Displaybild **28** der drei Bilder entfernt werden, wird die Referenz **30** so überschrieben, daß dort der Index der Referenz **32**, welcher gleich dem Displaybild **29** ist, eingetragen wird.

[0067] Im Ergebnis wird das zu löschende Displaybild **28** nicht mehr in der Abfolge erreicht.

[0068] Deutlich wird der Aufwandsvorteil im Zeitbedarf durch die explizite Speicherung der Ordnungsrelationen, er wird durch den Speicherplatz für die Referenzen erkauft.

[0069] Die Vorteile der erfindungsgemäß expliziten Ordnung kann man an diesem Beispiel gegenüber einer herkömmlich naheliegenden impliziten Ordnung gut klarstellen.

[0070] Bei einer impliziten Ordnung, also bei fortlaufender Speicherung ohne Referenzen, wäre jetzt eine Verschiebung aller Bilder nach dem zu löschenden notwendig. Dann wären für die gezeichnete Beispielaufgabe mindestens das Lesen und das Schreiben des **Bildes** 29 und aller fiktiv folgenden notwendig, wobei typisch bereits jedes Bild erheblich mehr Daten aufweist als eine Referenz. Also würden in der Zeit des Einsatzes der Chipkarte im bzw. am Terminal wesentlich mehr Daten zwischen Chipkarten-Controller und Ansteuerung zu bewegen sein, was eine besonders unerwünschte Verlängerung der Transaktionen zur Folge hätte.

[0071] **Fig.** 6 stellt den Ablauf des Einfügens eines Displaybildes dar, wobei die Abfolge in einer einfachen Referenzliste organisiert ist.

[0072] Im oberen Teil der Zeichnung ist ein Ausschnitt der Record-Tabellen mit Einträgen dreier Displaybilder **33, 34** und **35** zu sehen. Außerdem sind die Referenzen **37, 38** und **39** so verkettet, daß auf das Displaybild **33** das **Bild** 34 folgt und darauf wiederum das **Bild** 35. Die Pfeile symbolisieren die Verkettung.

[0073] Zu sehen ist außerdem ein freier Eintrag **36** und **40** jeweils in einer der Tabellen. Somit ist der Zustand vor dem Einfügen dargestellt.

[0074] Eingefügt werden soll ein neues Bild nach dem Displaybild **33**. In den Eintrag **36** der Record-Tabelle wird dazu der einzufügende Inhalt des Displaybildes eingetragen. Dann wird die Referenz **37** auf den Index des Eintrages **40** bzw. **36** geändert. Außerdem wird in der Referenz **40** der entsprechende Index des Nachfolgers **38** bzw. **34** eingeschrieben.

[0075] Im unteren Teil der Zeichnung ist nun der Zustand nach dem Einfügen dargestellt.

[0076] Insgesamt wird klar, daß kein aufwendiges Umspeichern bei der Organisation der expliziten Ordnungsrelation in Form einer verketteten Referenzliste notwendig ist.

[0077] Ein gedanklicher Vergleich zu einer herkömmlich naheliegenden impliziten Ordnung zeigt – ebenso wie im Beispiel der **Fig.** 5 – den massiven Vorteil auf. Letztlich wird auch bei dieser Einfügeoperation keine wesentliche Verlängerung der Chipkarten-Transaktion im bzw. am Terminal notwendig.

[0078] **Fig.** 7 zeigt eine beispielhafte Datenstruktur für eine elektronische Geldbörse oder einen Zahlschein auf einer Chipkarte. Die rechts gezeigten Displaybilder enthalten als ersten Eintrag den Saldo des aufgebuchten Betrages (hier 104.80 Werteinheiten). Danach folgen die letzten Buchungen (zuletzt –4.30 Werteinheiten, davor –5.20 Werteinheiten, dann fortlaufend davor –1.66, –2.05, +100.00, –0.66, –0.12, –1.11 und +20.00 Werteinheiten). Die Einträge 0.00 und –0.44 Werteinheiten werden nicht erreicht, sie könnten z. B. vorher gelöscht worden sein. Die Indizes beginnen mit dem Index 0. Jeder Eintrag der Tabelle hat genau einen Index. Hier sollen von unten nach oben die Einträge der Indizes 0, 1, 2, 3 . . . usw. dargestellt sein.

[0079] Der Index 0 wird auch beim Einschalten des Lesemodus im Indexregister erzeugt. Unter diesem Index 0 soll auch der Initialeintrag in der Referenztabelle stehen, welcher auch nach dem Aufwecken aus einem Schlafmodus als Referenz benutzt wird.

[0080] Die Referenztabelle enthält eine einfache Liste (Indizes **1, 2, 3, 6, 5, 8, 10, 11, 12, 13,** 0) der Reihenfolge. Der Eintrag am Index **14** verweist auf den Index 0, damit schließt sich der Zyklus. Dieses Beispiel zeigt, daß die implizite Reihenfolge der Indizes bei der Referenzierung durch entsprechende explizite Einträge eingehalten werden kann (z. B. . . . 1, 2, 3, . . . oder . . . 11, 12, 13, . . .), jedoch in anderen Fällen nicht auch beachtet werden muß (z. B. . . . 6, 5, 8, 10, 12, . . . oder . . . 13, 0, . . .). Es besteht durch geeignete Einträge in der Referenztabelle der Ordnungsrelationen eine flexible, wahlfreie Organisationsmöglichkeit. Der untere Teil zeigt das gemeinsame Indexregister beider Tabellen, die Fortschaltung wird durch ein getastetes Taktsignal symbolisch dargestellt.

[0081] **Fig.** 8 stellt eine Anwendung der erfindungsgemäßen Ansteuerung in einer kontaktlosen Chipkarte dar. Anstelle des Kontaktfeldes tritt nun die Antenne **41** mit Empfangsschaltung. Sie liefert Energie, Takt und Informationen. Für niedrige und mittlere Frequenzen ist die Antenne oftmals als Spule ausgeführt. Bei höheren Frequenzen kommen andere Bauformen zum Einsatz, z. B. Dipol- oder Flächenantennen. Die kontaktlose Ankopplung an ein Terminal kann auch auf kapazitivem Wege erfolgen. Die weiteren in der Abbildung gezeichneten Baugruppen und Verbindungen entsprechen denen in **Fig.** 1.

[0082] **Fig.** 9 stellt eine Anwendung der Ansteuerung in einer kontaktlosen Chipkarte und die Aufladung der internen Energiequelle dar.

[0083] Wie in **Fig.** 8 stellt eine Antenne **41** die Verbindung zum Terminal her. Die Spannung für den Schreibmodus, welche aus der Antenne gewonnen wurde, lädt gleichzeitig eine regenerierbare interne Energiequelle **44** auf. Dazu wird die Verbindungsleitung **42** zwischen der Ansteuerschaltung **1** und der Energiequelle **44** für den Ladestrom und für den Entladestrom im Lese-/Anzeigebetrieb genutzt.

[0084] Die Ansteuerschaltung **1** ist um einen Umschalter **43** erweitert worden. Exemplarisch ist als regenerierbare Quelle **44** ein Kondensator gezeichnet, es kommen aber auch Akkumulatoren in Betracht. Die weiteren in **Fig.** 9 gezeichneten und indizierten Baugruppen und Verbindungen entsprechen denen in **Fig.** 1.

BEZUGSZEICHENLISTE

1 Ansteuerschaltung
2 Display
3 Chipkarten-Controller
4 Kontaktfeld

5 Energiequelle
6 Leitung
7 Verbindung
8 Leitung
9 Taster
10 Datenleitung
11 Datenverbindung
12 Steueranschlüsse
13 Masseverbindung
14 Schaltungsteil
15 Schaltungsteil
16 EEPROM-Speicher
1% Aufbereitungsschaltung
18 Aufbereitungsschaltung
19 Steuerschaltung des Schreibmodus
20 Steuerschaltung für den Lesemodus
21 Treiberschaltung
22 Chipkarten-Terminal-Versorgungsspannung
23 interne Energiequelle
24 Schaltmittel (Taster)
25 Steuersignal
26 Umschaltlogik
27 Displaybild
28 Displaybild
29 Displaybild
30 Referenz
31 Referenz
32 Referenz
33 Displaybild
34 Displaybild
35 Displaybild
36 Tabelle
37 Referenz
38 Referenz
39 Referenz
40 Tabelle
41 Antenne
42 Verbindungsleitung
43 Umschalter
44 Energiequelle
S Schreibmodus
L Lesemodus
OB Ordnung der Bilder
IB Informationen der Bilder
AB Aktuelles Bild
I Index
NJ Nächster Index

Patentansprüche

1. Verfahren zum Ansteuern eines Displays, insbesondere eines Displays einer Chipkarte, mit den Schritten:
   (a) in einem Schreibmodus wird die auf dem Display anzuzeigende Information, die wenigstens einen auf dem Display darzustellenden Informationsinhalt (Displaybild) umfaßt, in einer nur dem Display zugeordneten Ansteuerschaltung gespeichert;
   (b) ebenfalls im Schreibmodus werden wählbare Ordnungsrelationen gespeichert, die explizit für jeden der Informationsinhalte zugeordnet sind und die Abfolge der Informationsinhalte bei der Anzeige bestimmen;
   (c) in einem Lesemodus wird aus der Ansteuerschaltung die den wenigstens einen Informationsinhalt aufweisende anzuzeigende Information aufgerufen und auf dem Display zur Anzeige gebracht, wobei
   (d) die gespeicherten und explizit zugeordneten Ordnungsrelationen für die Abfolge der Aufrufe und damit der Anzeige berücksichtigt werden.

2. Verfahren nach Anspruch 1, dadurch gekennzeichnet, daß
   (a) die Betriebsart Lesemodus durch ein externes Aufwecksignal aus einem Ruhezustand (Schlafmodus), ohne Aktivität außer dem Erhalt der Reaktionsfähigkeit auf Aufwecksignale, heraus eingenommen wird;
   (b) anschließend als erstes der Displaybilder ein durch die vorgebbare Ordnungsrelation bestimmtes Displaybild angezeigt wird, wobei diese Ordnungsrelation an einem festgelegten Initialeintrag abgespeichert wurde, der infolge des Aufwecksignals ausgewertet wird.

3. Verfahren nach Anspruch 2, dadurch gekennzeichnet, daß der Lesemodus sich nach Ablauf einer vorgebbaren Zeit selbst beendet, um erneut in den Ruhezustand (Schlafmodus) überzugehen.

4. Verfahren nach Anspruch 2, dadurch gekennzeichnet, daß das externe Aufwecksignal durch manuelle Betätigung eines Tasters erzeugt wird.

5. Verfahren nach einem der vorhergehenden Ansprüche, dadurch gekennzeichnet, daß
   (a) die Daten der Displaybilder in einer Record-Tabelle gespeichert werden, in der jeder Eintrag einem Bild entspricht;
   (b) die Daten der Ordnungsrelationen der Anzeige der Displaybilder in einer Referenztabelle gespeichert werden, wobei jeder Eintrag den Tabellenindex des nächsten anzuzeigenden Displaybildes und des nächsten/der nächsten Einträge dieser Tabelle der Ordnungsrelationen entspricht.

6. Verfahren nach Anspruch 5, dadurch gekennzeichnet, daß
   (a) das nächste der Displaybilder nach manueller Betätigung eines Tasters angezeigt wird,
   (b) wobei der Index des nächstfolgend anzuzeigenden Tabelleneintrages der Displaybilder aus dem aktuellen Eintrag der Referenztabelle der Ordnungsrelationen ausgelesen wird und
   (c) dieser Index zugleich auf den nächstfolgenden Eintrag der Referenztabelle der Ordnungsrelationen weist.

7. Verfahren nach Anspruch 6, dadurch gekennzeichnet, daß
   (a) jeder Eintrag der Referenztabelle der Ordnungsrelationen in mehrere Teile gegliedert ist, welche jeder einen Nachfolge-Index enthalten;
   (b) jeder dieser Teile der Tabelleneinträge wahlweise einzeln ausgelesen wird, wenn ein zugeordneter Taster betätigt worden ist;
   (c) ein als nächstes ausgewähltes Displaybild nach Betätigung eines von mehreren Tastern angezeigt wird,
   (d) wobei der Index des nächstfolgend anzuzeigenden Tabelleneintrages der Displaybilder aus einem – dem betätigten Taster zugeordneten – Teil des aktuellen Eintrages der Referenztabelle der Ordnungsrelation ausgelesen wird und
   (e) dieser Index zugleich auf den nächstfolgenden Eintrag der Referenztabelle der Ordnungsrelationen weist.

8. Verfahren nach einem der Ansprüche 5 bis 7, dadurch gekennzeichnet, daß an die Stelle der Betätigung des Tasters/der Taster ein Signal tritt, welches nach einer vorgebbaren Zeit selbständig erzeugt wird.

9. Verfahren nach einem der Ansprüche 5 bis 8, dadurch gekennzeichnet, daß die Referenzierung über die Indizes, welche in der Referenztabelle der Ordnungsrelationen gespeichert sind, eine Verkettung aller gültigen Displaybilder herstellt, wobei jede Referenz auf mindestens einen der Nachfolger verweist, so daß sich eine zumindest einfach verkettete Liste bildet.

10. Verfahren nach Anspruch 9, dadurch gekennzeichnet, daß die Verkettung mindestens eine zyklische Sequenz der angezeigten Displaybilder herstellt.

11. Verfahren nach einem der Ansprüche 7 bis 10, dadurch gekennzeichnet, daß das Einnehmen eines Fehlerzustandes durch die Anzeige eines besonderen Displaybildes aus einem reservierten Tabelleneintrag dargestellt wird, wobei der Index zum Erreichen dieses Tabelleneintrages durch den Vorgang der Fehlerfeststellung durch die Steuerschaltung des Schreibmodus erzeugt wird.

12. Verfahren nach einem der Ansprüche 7 bis 10, dadurch gekennzeichnet, daß

(a) das Fortbestehen eines Fehlerzustandes nach erneutem Bestimmen der Anzeigeabfolge durch die Anzeige eines besonderen Displaybildes aus einem reservierten Tabelleneintrag dargestellt wird, wobei der Index zum Erreichen dieses Tabelleneintrages durch den Vorgang der Fehlerfeststellung durch die Steuerschaltung des Lesemodus erzeugt wird, und

(b) als Anfangsindex in die Tabelle der Ordnungsrelationen eingetragen wird.

13. Schaltungsanordnung zum Ansteuern eines Displays, insbesondere eines Displays einer Chipkarte, gekennzeichnet durch eine nur dem Display (2) zugeordnete Ansteuerschaltung (1), die in einem Schreibmodus und einem Lesemodus umschaltbar ist, wobei die Ansteuerschaltung (1) unabhängig von einer den Schreibmodus aktivierenden und darzustellende Informationsinhalte bereitstellenden Steuerschaltung für den Lesemodus aktivierbar ist, die Ansteuerschaltung (1) einen nichtflüchtigen Speicher (16) umfaßt, wobei eine erste Schaltungseinheit (17) vorgesehen ist, die der getrennten Eintragung von anzuzeigenden Informationen, die wenigstens einen auf dem Display (2) darzustellenden Informationsinhalt (Displaybild) umfassen, dient, indem den anzuzeigenden Informationen entsprechende Informationsinhalte und diesen zugeordnete Organisationsrelationen getrennt abspeicherbar sind, und eine zweite Schaltungseinheit (20) vorgesehen ist, die dem Auslesen der anzuzeigenden Informationen und der zugeordneten Organisationsrelationen dient, wobei die zweite Schaltungseinheit (20) über ein Schaltmittel (24) aktivierbar ist.

14. Schaltungsanordnung nach Anspruch 13, dadurch gekennzeichnet, daß die Ansteuerschaltung (1) räumlich separat von der die anzuzeigenden Informationen liefernden Hauptschaltung (3) angeordnet ist.

15. Schaltungsanordnung nach einem der Ansprüche 13 und 14, dadurch gekennzeichnet, daß die Ansteuerschaltung (1) räumlich innerhalb der Displaybaugruppe angeordnet ist.

16. Schaltungsanordnung nach Anspruch 15, dadurch gekennzeichnet, daß die Ansteuerschaltung (1) als erstes einer Reihe von hintereinander geschalteten Schaltungskomponenten der Displaybaugruppe nach der Schnittstelle zum Chipkarten-Controller angeordnet ist.

17. Schaltungsanordnung nach Anspruch 13 bis 16, dadurch gekennzeichnet, daß die Ansteuerschaltung (1) in jeder Betriebsart (Schreibmodus, Lesemodus) aus einer eigenen, getrennten Energiequelle versorgt wird.

18. Schaltungsanordnung nach Anspruch 17, dadurch gekennzeichnet, daß die Energiequelle für die Betriebsart Lesemodus eine elektrochemische Energiequelle (Primärbatterie/Akkumulator) und/oder ein langzeitspeichernder Kondensator und/oder eine Solarzelle/Solarfläche und/oder ein Piezo-Kristall-Element, welches durch manuelle Druckausübung elektrische Energie liefert, und/oder eine thermoelektrische Zelle (Peltier-Element) ist, welche infolge von Temperaturdifferenzen aufgrund der Hand-Berührung elektrische Energie liefert.

19. Schaltungsanordnung nach Anspruch 18, dadurch gekennzeichnet, daß

(a) nach gebrauchsbedingter Unterbrechung der Energiequelle (Lichtabschattung/Einstellen der Druckausübung oder Wärmezufuhr) in der Betriebsart Lesemodus der Ruhezustand eingenommen wird und dann selbständig der Lesemodus wieder anläuft, wenn diese Unterbrechung wegfällt;

(b) beim Wiederanlaufen die Abfolge der Displaybilder ausgehend von einem festen Initialeintrag oder dem nichtflüchtig zwischengespeicherten Zustand unmittelbar vor der gebrauchsbedingten Unterbrechung erneut begonnen wird;

(c) wobei die explizit gespeicherten Ordnungsrelationen dieses Initialeintrages oder dieses Zustandes für die Ermittlung des ersten nach dem Wiederanlaufen anzuzeigenden Displaybildes ausgelesen werden.

20. Schaltungsanordnung nach Anspruch 17, dadurch gekennzeichnet, daß die Energiequelle für die Betriebsart Schreibmodus durch ein Chipkarten-Terminal geliefert wird, welches über Kontakte die Betriebsspannung einspeist.

21. Schaltungsanordnung nach Anspruch 17, dadurch gekennzeichnet, daß die Energiequelle für die Betriebsart Schreibmodus durch ein Chipkarten-Terminal geliefert wird, welches kontaktlos über elektromagnetische Wechselfelder elektrische Energie in die Schaltung einkoppelt.

22. Schaltungsanordnung nach einem der Ansprüche 13 bis 21, dadurch gekennzeichnet, daß das Arbeitstaktsignal der Steuerschaltung für die Betriebsart Schreibmodus durch ein Chipkarten-Terminal geliefert wird.

23. Schaltungsanordnung nach einem der Ansprüche 13 bis 22, dadurch gekennzeichnet, daß das Arbeitstaktsignal der Steuerschaltung für die Betriebsart Lesemodus in der Chipkarte mobilen Gerät autark erzeugt wird.

24. Schaltungsanordnung nach einem der Ansprüche 13 bis 22, dadurch gekennzeichnet, daß das Fortschaltsignal für den Wechsel des anzuzeigenden Displaybildes aus einer bezüglich der Ansteuerschaltung externen Quelle zugeführt wird.

25. Schaltungsanordnung nach Anspruch 24, dadurch gekennzeichnet, daß das Fortschaltsignal durch Tasterbetätigung erzeugt wird.

26. Schaltungsanordnung nach Anspruch 24, dadurch gekennzeichnet, daß das Fortschaltsignal durch einen zeitbestimmten Schaltungsteil nach einer vorgebbaren Zeit selbständig erzeugt wird.

27. Schaltungsanordnung nach einem der Ansprüche 13 bis 24, dadurch gekennzeichnet, daß

(a) eine Datenverbindung (11) zur Display-Ansteuerschaltung (1) von der Hauptschaltung (3) besteht, welche die anzuzeigenden Informationen liefert, und

(b) diese Datenverbindung zur seriellen Übertragung der einzuspeichernden Informationen im Schreibmodus dient.

28. Schaltungsanordnung nach einem der Ansprüche 13 bis 24, dadurch gekennzeichnet, daß

(a) eine Datenverbindung (11) zur Display-Ansteuerschaltung (1) von der Hauptschaltung (3) besteht, welche die anzuzeigenden Informationen liefert, und

(b) diese Datenverbindung ein Busprotokoll zur Übertragung der einzuspeichernden Informationen im Schreibmodus besitzt.

29. Schaltungsanordnung nach einem der Ansprüche 13 bis 28, dadurch gekennzeichnet, daß elektrisch löschbare und programmierbare Nur-lese-Speicherzellen (EEPROM) (16) die Daten der Displaybilder und der Ordnungsrelationen der Bilder nichtflüchtig auch dann speichern, wenn die Ansteuerschaltung (1) sich weder in der Betriebsart Schreibmodus noch in der Betriebsart Lesemodus befindet.

30. Schaltungsanordnung nach Anspruch 28, dadurch gekennzeichnet, daß an die Stelle der nichtflüchtigen Speicherzellen des genannten Anspruchs flüchtige Speicherzellen mit geringem Energieverbrauch treten und diese kontinuierlich von der Energiequelle des Lesemodus versorgt werden.

31. Chipkarte, gekennzeichnet durch eine Schaltungsanordnung nach wenigstens einem der Ansprüche 13 bis 30.

Hierzu 6 Seite(n) Zeichnungen

Nummer: DE 101 46 804 A1
Int. Cl.[7]: G 06 K 19/07
Offenlegungstag: 10. April 2003

Fig.8

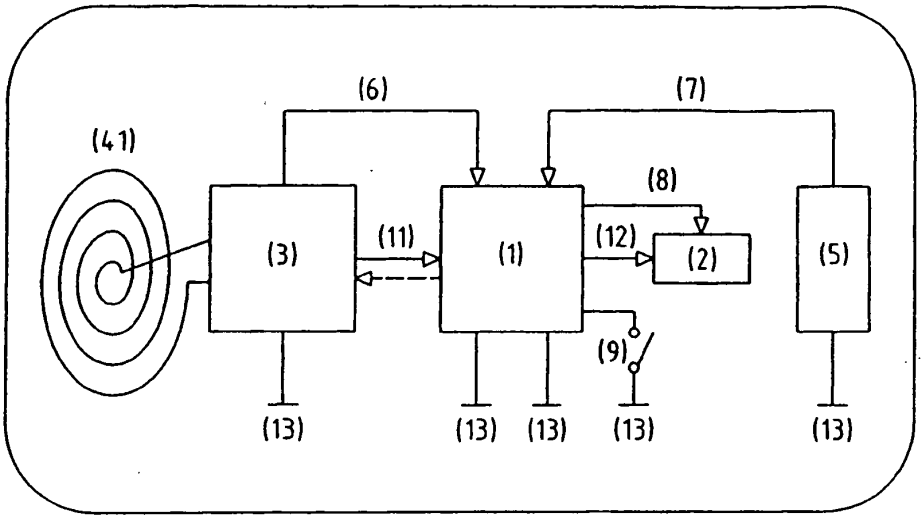

Fig.9

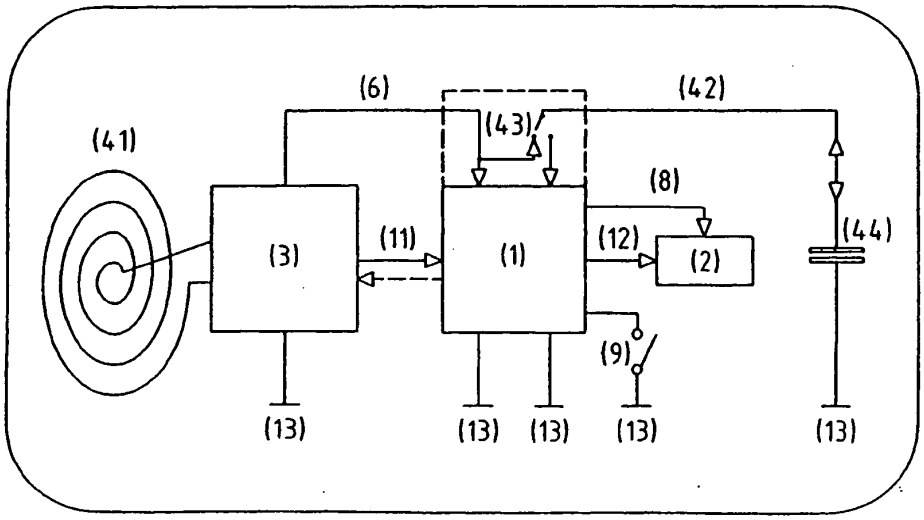

103 150/386

Nummer:
Int. Cl.[7]:
Offenlegungstag:

DE 101 46 804 A1
G 06 K 19/07
10. April 2003

Fig.7

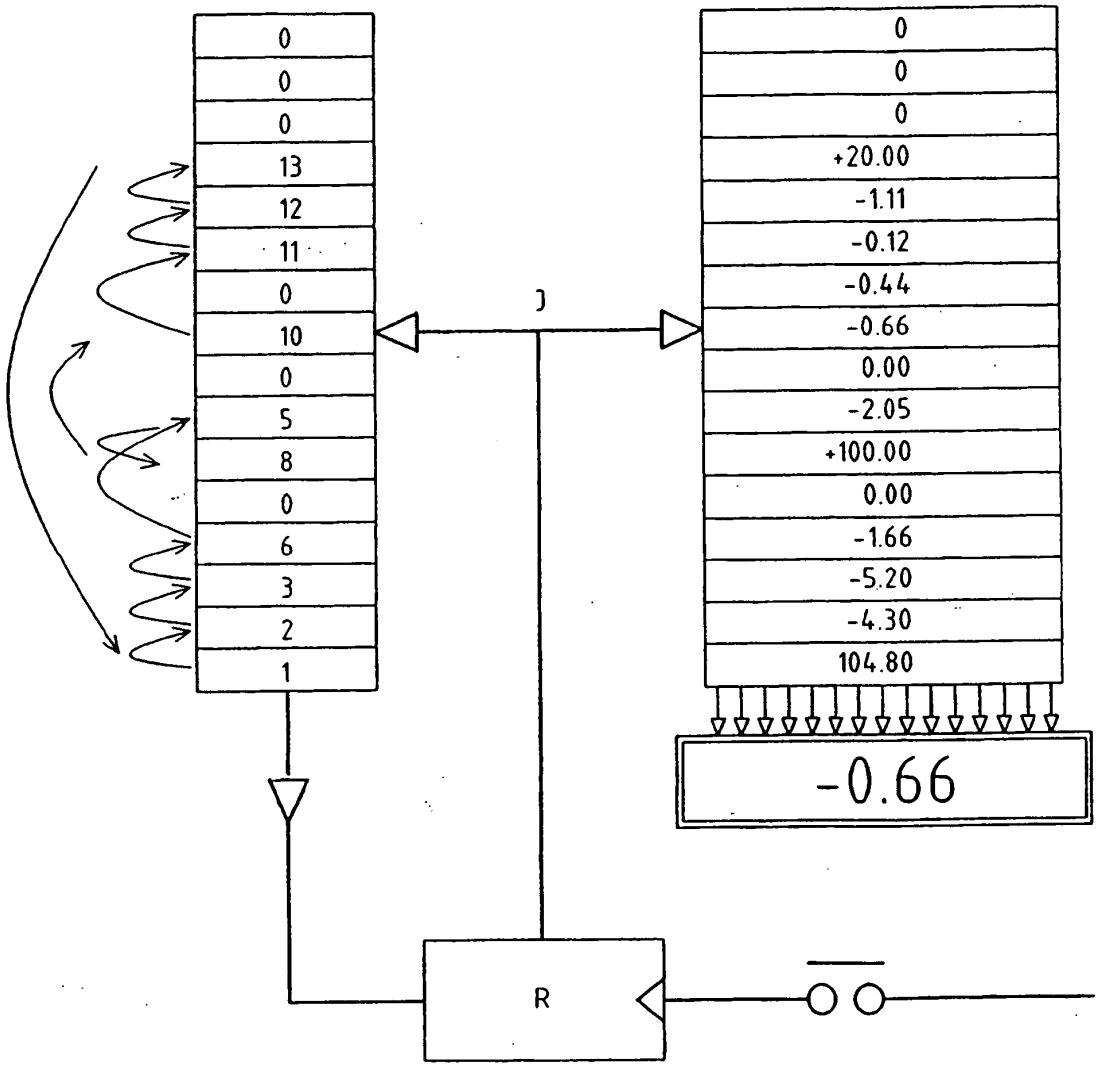

103 150/386

Nummer:
Int. Cl.[7]:
Offenlegungstag:

DE 101 46 804 A1
G 06 K 19/07
10. April 2003

Fig.5

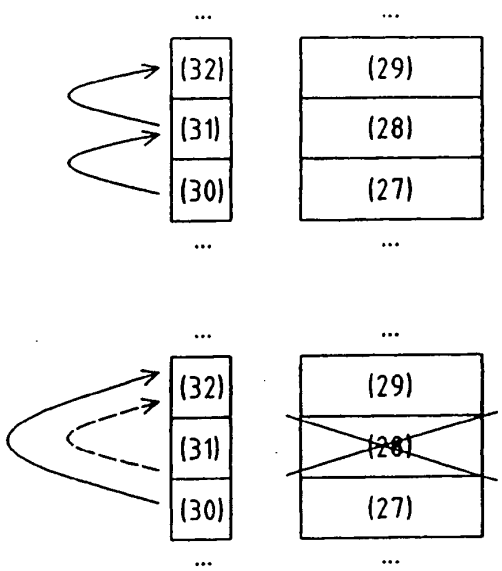

Fig.6

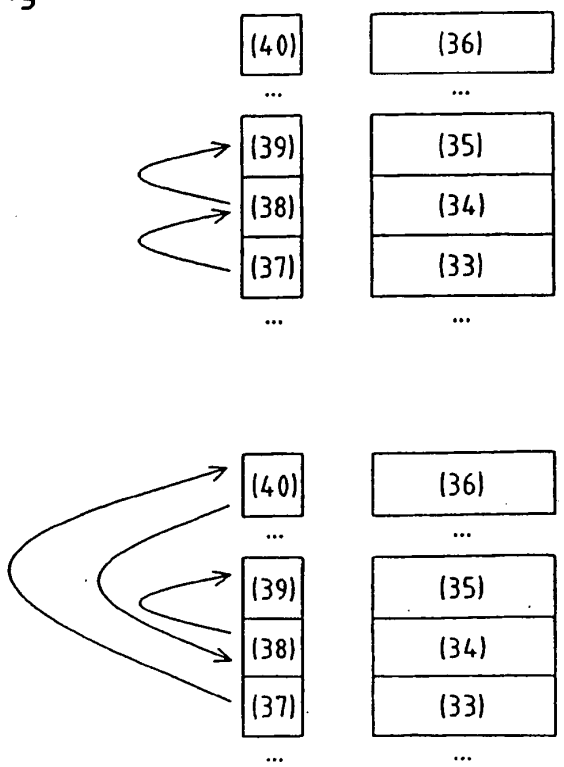

Nummer:
Int. Cl.[7]:
Offenlegungstag:

DE 101 46 804 A1
G 06 K 19/07
10. April 2003

Fig.4

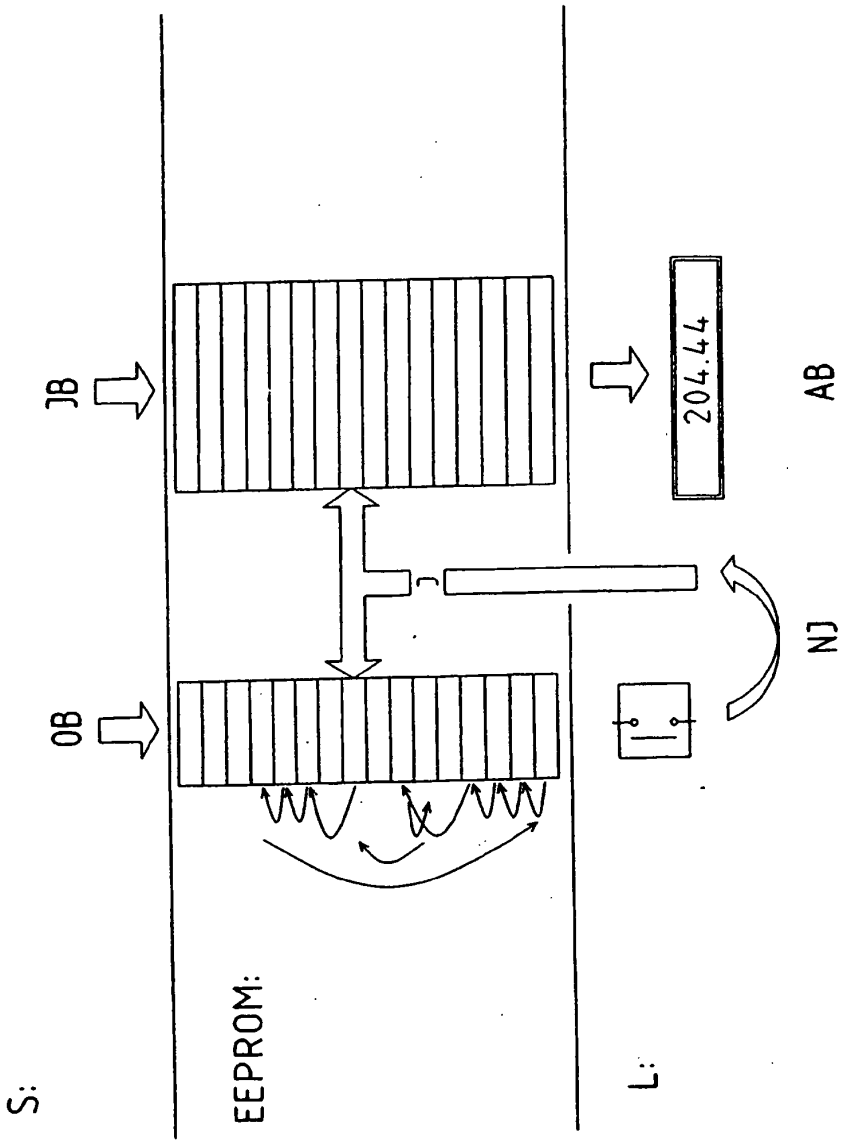

Nummer: DE 101 46 804 A1
Int. Cl.[7]: G 06 K 19/07
Offenlegungstag: 10. April 2003

Fig.2

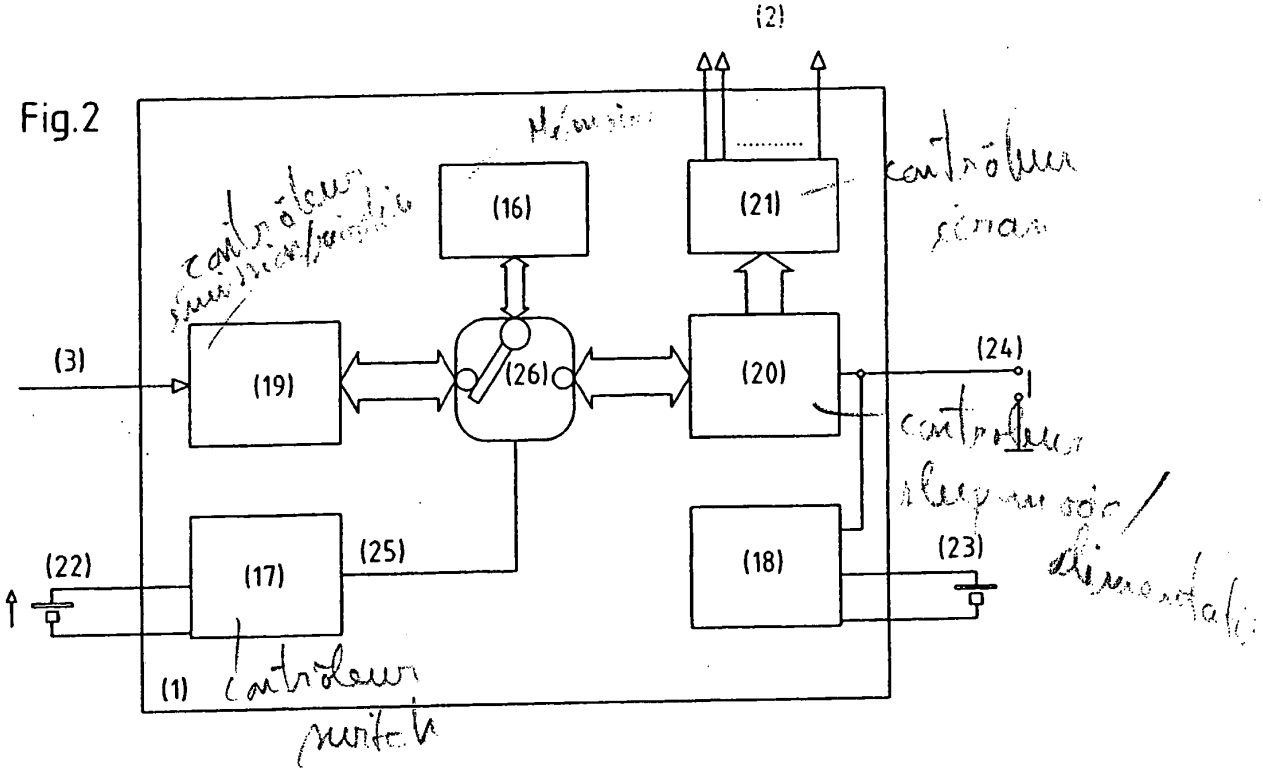

Fig.3

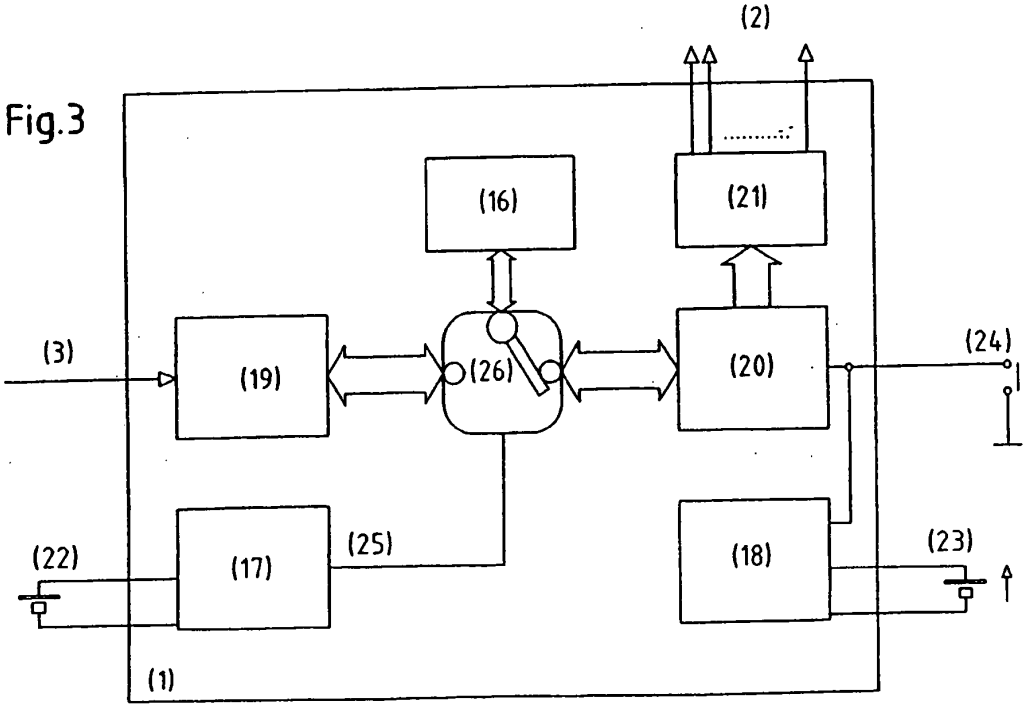

103 150/386

Nummer:
Int. Cl.[7]:
Offenlegungstag:

DE 101 46 804 A1
G 06 K 19/07
10. April 2003

Fig.1

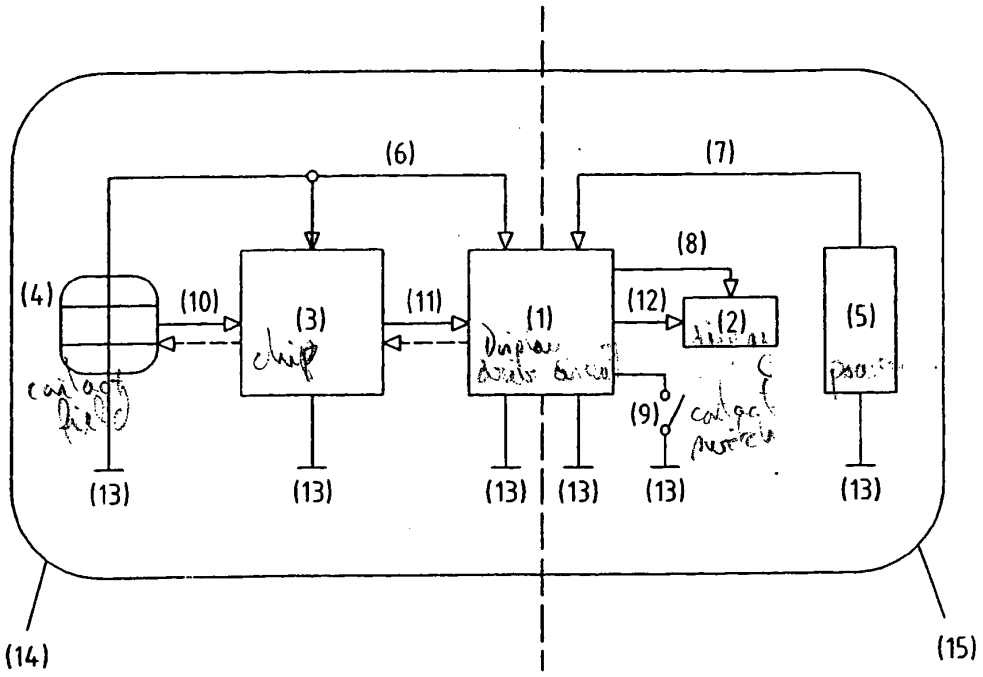

This Page is inserted by IFW Indexing and Scanning Operations and is not part of the Official Record

BEST AVAILABLE IMAGES

Defective images within this document are accurate representations of the original documents submitted by the applicant.

Defects in the images include but are not limited to the items checked:

- ☐ BLACK BORDERS
- ☐ IMAGE CUT OFF AT TOP, BOTTOM OR SIDES
- ☐ FADED TEXT OR DRAWING
- ☑ BLURED OR ILLEGIBLE TEXT OR DRAWING
- ☐ SKEWED/SLANTED IMAGES
- ☐ COLORED OR BLACK AND WHITE PHOTOGRAPHS
- ☐ GRAY SCALE DOCUMENTS
- ☐ LINES OR MARKS ON ORIGINAL DOCUMENT
- ☐ REPERENCE(S) OR EXHIBIT(S) SUBMITTED ARE POOR QUALITY
- ☐ OTHER: _____

IMAGES ARE BEST AVAILABLE COPY.
As rescanning documents *will not* correct images problems checked, please do not report the problems to the IFW Image Problem Mailbox

(12) INTERNATIONAL APPLICATION PUBLISHED UNDER THE PATENT COOPERATION TREATY (PCT)

(19) World Intellectual Property Organization
International Bureau

(43) International Publication Date
21 October 2004 (21.10.2004)

PCT

(10) International Publication Number
WO 2004/090805 A1

(51) International Patent Classification[7]: G06K 19/07

(21) International Application Number: PCT/IB2003/001523

(22) International Filing Date: 14 April 2003 (14.04.2003)

(25) Filing Language: English

(26) Publication Language: English

(71) Applicant *(for all designated States except US)*: G. HOLDINGS LTD. [BS/BS]; 1A, Star Plaza, Mackey St., P.O. Box SS-19013, Nassau (BS).

(72) Inventor; and
(75) Inventor/Applicant *(for US only)*: GAILLARD, Joël [FR/BS]; 1A, Star Plaza, Mackey ST., P.O. Box SS-19013, Nassau (BS).

(74) Agent: NITHARDT, Roland; Cabinet Nithardt et Associés S.A., B.P. 1445, F-68071 Mulhouse Cedex (FR).

(81) Designated States *(national)*: AE, AG, AL, AM, AT, AU, AZ, BA, BB, BG, BR, BY, BZ, CA, CH, CN, CO, CR, CU, CZ, DE, DK, DM, DZ, EC, EE, ES, FI, GB, GD, GE, GH, GM, HR, HU, ID, IL, IN, IS, JP, KE, KG, KP, KR, KZ, LC, LK, LR, LS, LT, LU, LV, MA, MD, MG, MK, MN, MW, MX, MZ, NI, NO, NZ, OM, PH, PL, PT, RO, RU, SC, SD, SE, SG, SK, SL, TJ, TM, TN, TR, TT, TZ, UA, UG, US, UZ, VC, VN, YU, ZA, ZM, ZW.

(84) Designated States *(regional)*: ARIPO patent (GH, GM, KE, LS, MW, MZ, SD, SL, SZ, TZ, UG, ZM, ZW), Eurasian patent (AM, AZ, BY, KG, KZ, MD, RU, TJ, TM), European patent (AT, BE, BG, CH, CY, CZ, DE, DK, EE, ES, FI, FR, GB, GR, HU, IE, IT, LU, MC, NL, PT, RO, SE, SI, SK, TR), OAPI patent (BF, BJ, CF, CG, CI, CM, GA, GN, GQ, GW, ML, MR, NE, SN, TD, TG).

Published:
— *with international search report*

For two-letter codes and other abbreviations, refer to the "Guidance Notes on Codes and Abbreviations" appearing at the beginning of each regular issue of the PCT Gazette.

(54) Title: PORTABLE ELECTRONIC DEVICE CAPABLE OF ALTERNATE DATA CONVEYANCE OPERATIONS RESPONSIVE TO AN INVARIABLE ACTIVATION COMMAND

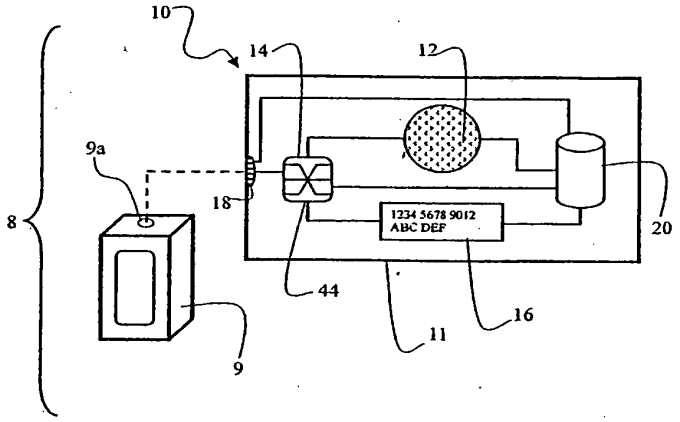

(57) Abstract: The portable electronic device (10) comprises an electronic circuit capable of storing data therein, capable of processing data, and capable of data input and output; a control device (12) operatively linked to the electronic circuit (14), with an invariable activation command being issued when the control device is triggered; first and second data conveyance functions programmed in the electronic circuit; a cue receiver (18) for receiving a selectively emitted activation cue from a source (9) external to the portable electronic device; and a power connector or an internal power source (20) for providing power to the portable electronic device. In use, upon the control device being selectively triggered to issue the invariable activation command, the electronic circuit will accomplish the first data conveyance function if an activation cue was received by the cue receiver and the second data conveyance function if no cue was received by the cue receiver.

WO 2004/090805 A1

10/552912
JC20 Rec'd PCT/PTO 13 OCT 2005

TITLE OF THE INVENTION : PORTABLE ELECTRONIC DEVICE CAPABLE OF ALTERNATE DATA CONVEYANCE OPERATIONS RESPONSIVE TO AN INVARIABLE ACTIVATION COMMAND

FIELD OF THE INVENTION

This invention relates to a portable electronic device capable of alternate data conveyance operations responsive to an invariable activation command.

BACKGROUND OF THE INVENTION

Conventional portable electronic or magnetic devices are used for many different applications. Such portable devices can be for example access devices such as keycards, identification devices, or credit or debit devices such as the so-called smart cards.

Electronic identification devices are widely used by banks, credit companies, stores, to allow automated monetary transactions without the assistance of a bank teller.

For conventional credit cards, a magnetic strip is encoded with a small amount of coded information identifying the cardholder, such as an identification code and a personal identification number (PIN). To access the information held by such cards after or during a transaction, a suitable transaction interface machine comprising an appropriate magnetic card reader is required. Transaction or other account-related information can be outputted on a display screen located on the transaction machine.

Some prior art identification or transaction cards incorporate greater storage capacity and data processing means in the form of a microchip carried by the plastic main body of a smart card. These smart cards can store more data than standard magnetic cards. These cards, however, still require the use of a card reader interface machine to access the information comprised thereon, and a supplementary screen on the interface machine is required to view their content.

Some prior art identification cards have been provided with an in-built display screen and an information decoder cooperating with each other to access, decode and visualize coded information comprised in a memory unit located on the card. These

prior art devices, however, necessitate multiple controls thereon to accomplish different functions of the card.

SUMMARY OF THE INVENTION

The present invention relates to a portable electronic device, comprising:

- an electronic circuit capable of storing data therein, capable of processing data, and capable of data input and output;
- a control device operatively linked to said electronic circuit, with an invariable activation command being issued when said control device is triggered;
- a user interface device operatively linked to said electronic circuit;
- a data transceiver operatively linked to said electronic circuit;
- a cue receiver for receiving a selectively emitted activation cue from a source external to said portable electronic device;
- a data conveyance switching element operatively linked to said electronic circuit, said switching element being in an activated state upon an activation cue having been received by said cue receiver, and being in an inactive state when no activation cue was received by said cue receiver;

and

- power means for providing power to said portable electronic device;

wherein upon said control device being selectively triggered to issue said invariable activation command:

- if said switching element is in said activated state, a data exchange will be initiated through the instrumentality of said data transceiver for exchanging data between said electronic circuit and an external data exchange device;
- if said switching element is in said inactive state, data will be conveyed from said electronic circuit to said user interface device for communicating information to the portable electronic device holder.

In one embodiment, said user interface device is a display screen.

In one embodiment, wherein said data transceiver comprises a data transmitter and a data receiver distinct from said data transmitter.

In one embodiment, said cue receiver is said data receiver.

In one embodiment, said control device is a biometric parameter detector, such as a fingerprint scanner capable of obtaining a fingerprint scan, whereby said control device is triggered when the fingerprint scan matches a fingerprint image pre-saved in said electronic circuit.

In one embodiment, said control device is a button, and said control device is triggered when the button is pressed.

In one embodiment, said electronic circuit comprises said switching element.

In one embodiment, said electronic circuit comprises a microchip, and wherein said switching element is a series of instructions programmed onto said microchip.

In one embodiment, said switching element comprises a decisional logical circuit.

The invention also relates to a data exchange system comprising :

- a data exchange device comprising a first electronic circuit, a first data transceiver and a cue emitter; and
- a portable electronic device, comprising:
  - a second electronic circuit capable of storing data therein, capable of processing data, and capable of data input and output;
  - a control device operatively linked to said electronic circuit, with an invariable activation command being issued when said control device is triggered;
  - a user interface device operatively linked to said electronic circuit;
  - a second data transceiver operatively linked to said electronic circuit;
  - a data conveyance switching element operatively linked to said electronic circuit, said switching element being in an activated state upon an activation cue having been received by said cue receiver, and being in an inactive state when no activation cue was received by said cue receiver;

and

- power means for providing power to said portable electronic device;

wherein upon said control device being selectively triggered to issue said invariable activation command:

- if said switching element is in its activated state, a data exchange will occur between said first data transceiver and said second data transceiver, thereby

exchanging data between said data exchange device and said portable electronic device;

- if said switching element is in its inactive state, data is forwarded to said user interface device for communicating information to the portable electronic device holder.

The invention further relates to a portable electronic device comprising:

- an electronic circuit capable of storing data therein, capable of processing data, and capable of data input and output;
- a control device operatively linked to said electronic circuit, with an invariable activation command being issued when said control device is triggered;
- first and second data conveyance functions programmed in said electronic circuit;
- a cue receiver for receiving a selectively emitted activation cue from a source external to said portable electronic device; and
- power means, for providing power to said portable electronic device;

wherein upon said control device being selectively triggered to issue said invariable activation command, said electronic circuit will accomplish said first data conveyance function if an activation cue was received by said cue receiver and said second data conveyance function if no cue was received by said cue receiver.

The invention also relates to a method for data exchange with a portable electronic device of the type comprising: an electronic circuit capable of storing data therein, capable of processing data, and capable of data input and output, a control device operatively linked to said circuit, a user interface device operatively linked to said circuit, communication ports operatively linked to said circuit, a switching element operatively linked to said electronic circuit and being in a default inactive state, and power means for providing power to said portable electronic device, said method comprising the steps of :

- awaiting for an activation cue to be received at a predetermined one of said communication ports;
- if an activation cue is received at one of said communication ports, changing the state of said switching element from its default inactive state to an activated state; and

- selectively triggering said control device to issue an invariable activation command, whereby said method will further comprise one of the two following steps:
  - if said switching element is in its activated state, initiating a data exchange with an external data exchange device through at least one of said communication ports; and
  - if said switching element is in its inactive state, conveying data from said electronic circuit to said user interface device for communicating information to the portable electronic device holder.

In one embodiment, said activation cue is received at one of said communication ports distinct from another one of said communication ports used for data exchange with the external data exchange device.

In one embodiment, the additional following step occurs after selectively triggering said control device if said switching element is in said activated state:

- conveying data from said electronic circuit to said user interface device for communicating information to the portable electronic device holder.

DESCRIPTION OF THE DRAWINGS

In the annexed drawings :

Figure 1 is a schematic view of a data exchange system, showing a portable electronic device according to one embodiment of the present invention and a data exchange device, and further suggesting in dotted lines a communication link being established between the portable electronic device and the data exchange device;

Figure 2 is an enlarged schematic view of the portable electronic device of figure 1, showing the electronic circuit thereof in greater detail; and

Figure 3 is a view similar to figure 1, but showing a portable electronic device according to an alternate embodiment of the present invention cooperating with an alternate corresponding data exchange device.

DETAILED DESCRIPTION OF THE EMBODIMENTS

Figure 1 shows a data exchange system 8 comprising a portable electronic device 10 according to the present invention and a data exchange device 9. Portable electronic device 10 can be used for example for monetary transactions or identification purposes.

Device 10 comprises a rigid or semi-rigid main body 11 on which are operatively mounted: a control device 12, an electronic circuit 14, a display screen 16, a transceiver 18 and power means 20. Main body 11 can be made from a plastic material for example.

As illustrated in figure 2, electronic circuit 14 comprises a central unit 40 cooperating with a memory unit 42 and an Input/Output (I/O) controller 44. I/O controller 44 comprises I/O ports 44a and a data forwarding switching element 44b. I/O ports 44a handle the inputting and outputting of the data, and switching element 44b directs the data flow towards an appropriate destination, as detailed hereinafter.

Central unit 40 is operatively linked to I/O controller 44. Central unit 40 is able to process data electronically stored in memory unit 42, and is further capable of storing data thereon. Central unit 40 collaborates with I/O controller 44, and is capable of processing data incoming therefrom and of sending data thereto in order for this data to be appropriately outputted to components operatively connected to I/O controller 44.

Memory unit 42 of circuit 14 can comprise pre-stored data thereon. For example, this pre-stored data may comprise data related to the cardholder, such as the cardholder's name, address, his bank balance, his date of birth, or any other desired information. In one embodiment, the pre-stored data can further comprise validation data about the cardholder that will be used to authenticate the user, for example a personal identification number (PIN) or a fingerprint image. In another embodiment, the pre-stored data comprises electronic money usable to purchase goods and services according to known electronic wallet transaction methods.

Electronic circuit 14 comprises three essential functions: processing data, storing data, and inputting and outputting data to other components. The diagram of figure 2 shows a specific layout of operational blocks comprised within electronic circuit 14 and cooperating with each other to provide these three functions thereto. It is

understood that alternate schematic circuit layouts could illustrate these three functions without departing from the scope of the present invention.

Electronic circuit 14 is operatively connected through the instrumentality of its I/O controller 44 to control device 12, screen 16 and transceiver 18.

In one embodiment, electronic circuit 14 is a programmable microchip, as found on smart cards.

Screen 16 is capable of displaying information transferred thereto from electronic circuit 14 through the instrumentality of I/O controller 44. Display screen 16 can be a LCD (liquid crystal display) screen embedded into main body 11 of the device. In one embodiment of the present invention, screen 16 is replaced with another user interface device, for example a speaker with voice emission software which would transform information forwarded thereto to speech understandable by the portable electronic device holder.

Control device 12 can be any suitable device allowing the portable electronic device holder to selectively trigger a data conveyance operation as detailed hereinafter. Control device 12 can be for example a single manually activated button provided on the portable electronic device main body 11 (as schematically illustrated in figures 1-3) which, when pressed, issues an activation command that triggers a particular data conveyance as described hereinbelow. Alternatively, control device 12 can include validation means such as a biometric parameter detector, for example a fingerprint scanner capable of obtaining a fingerprint image, which can be compared by central unit 40 to a fingerprint image pre-saved in memory unit 42. A fingerprint image match would validate that the user of portable electronic device 10 is authorized to use the latter, and then trigger the data conveyance operation. In another alternate embodiment, control device 12 could include validation means in the form of a keypad allowing the portable electronic device holder to type in a personal identification number (PIN) which will be compared by central unit 40 to a PIN pre-saved in memory unit 42, with a PIN match validating the portable electronic device user and triggering the data conveyance operation. In yet another embodiment, control device 12 is a validation button required to be pressed and on which a fingerprint scanner is provided: the card holder may thus concurrently apply his fingerprint on the scanner and press on the

button to respectively validate and trigger the data conveyance operation. Any other suitable control device may be used.

Generally, control device 12 is considered to be triggered when the portable electronic device holder has successfully accomplished the necessary steps for control device 12 to issue an activation command, for example when the PIN or fingerprint scan was authenticated, or when the validation button was pressed, or when the button was pressed while the fingerprint scan was authenticated.

In an alternate embodiment of the present invention, control device 12 and LCD screen 16 can be replaced with a single touch-screen display, whereby information can be outputted, and whereby validation information can be captured.

As illustrated in figure 1, a communication link can be established between the electronic device transceiver 18 and the transceiver 9a of data exchange device 9.

Data exchange device 9 can be any sort of data exchange device comprising an electronic circuit (not shown) therein and a data transceiver 9a therein able to cooperate with transceiver 18 of device 10. In one embodiment, data exchange device 9 is another portable electronic device 10. Data exchange device 10 can alternately be a computer, an interface machine such as an automatic teller machine, or any other suitable data exchange device.

The communication link can be a contact or contactless link, for example an infrared or radio wave communication link. Thus, the electronic device transceiver 18 can be any suitable emitting and receiving device capable of communication with the data exchange device transceiver 9a. In an embodiment wherein circuit 14 is a microchip similar to the ones found on smart cards, transceiver 18 could include a series of electrical contacts located on the surface of the microchip destined to cooperate with a corresponding type of electronic device reader, as known in the art.

Transceiver 18 is also a cue receiver, whereby an activation cue can be received by electronic device 10 from data exchange device transceiver 9a. This activation cue is in the form of a data communication of a specific type which will be recognized by electronic device 10 as an activation cue, for example a predetermined bit sequence.

Switching element 44b can be any type of device allowing data to be conveyed according to alternate data conveyance operations in response to an activation cue being received by transceiver 18 or not, as described hereinafter. According to the

embodiment shown in figures 1 and 2, electronic circuit 14 comprises switching element 44b. In an embodiment wherein electronic circuit 14 comprises a microchip, switching element 44b can be a series of instructions programmed onto the microchip whereby the data conveyance operation will be automatically executed according to whether or not an activation cue was received by transceiver 18. Alternately, switching element 44b can comprise a decisional logical circuit. Generally, switching element 44b can be a physical structure, a virtual program, or both.

According to the invention, at any given time, switching element 44b will consequently be in either one of the two following states:

a) an activated state wherein an activation cue was received by transceiver 18; or

b) an inactive state wherein no activation cue was received by transceiver 18.

By default, switching element 44b is in its inactive state.

Power means 20 can be any type of power source suitable for providing power to the portable electronic device components that require power, or for receiving power from an external source to re-distribute it to the portable electronic device components that require power. For example, power means 20 can be a battery, or a connector destined to be engaged by a corresponding external connector linked to a power source.

In the embodiment of figures 1-2, power means 20 is illustrated as being connected to all the portable electronic device components; it will be obvious for those skilled in the art that power means 20 could be connected only to one or a few components that require a power source to operate, depending on the exact nature of portable electronic device 10 and of each of its components.

In use, upon control device 12 being selectively triggered by the portable electronic device holder, an activation command will be issued by control device 12 to electronic circuit 14, in reaction to which data will be conveyed within portable electronic device 10, and possibly additionally conveyed to and from portable electronic device 10, according to a pre-determined data conveyance operation. The exact nature of this data conveyance operation will depend on the state of switching element 44b.

More particularly, if no activation cue is received by portable electronic device 10, then switching element remains in its inactive state. Upon control device 12 being

selectively triggered by the portable electronic device holder, data will be forwarded from electronic circuit 14 to user interface device 16, for communicating information to the portable electronic device holder.

However, upon an activation cue being received by portable electronic device 10, switching element 44b switches to its activated state. If control device 12 is selectively triggered by the portable electronic device holder while switching element 44b is in this activated state, a data exchange will be initiated between portable electronic device 10 and the external data exchange device 9. This data exchange may be in the form of a data download from electronic device 10 to data exchange device 9, of a data upload to electronic device 10 from data exchange device 9, or of a data download and a data upload - with this last alternative being the most likely in many applications.

Thus, upon control device 12 being selectively triggered to issue an activation command by the portable electronic device holder, one of two alternate data conveyance operations will be initiated within portable electronic device 10. In the case where no activation cue was received by portable electronic device 10, data will be communicated to the portable electronic device holder by means of user interface device 16. However, if an activation cue was previously received by portable electronic device 10, a data exchange will be initiated between portable electronic device 10 and data exchange device 9.

It is noted that, according to the present invention, the activation command issued when control device 12 is triggered, is an invariable activation command. That is to say that the portable electronic device holder will not be able to select to issue different activation commands by means of control device 12 depending on whether the user considers that a data exchange operation should be accomplished with an external data exchange device 9, or whether the user wishes to display information on screen 16 on the basis of data stored in memory 42. The same invariable activation command will thus be issued upon control device 12 being triggered, and it is the state of switching element 44b, resulting from the receipt or non-receipt of an activation cue by portable electronic device 10, that will be decisive as to the type of data conveyance that will occur.

It is further noted that the above-mentioned triggering of control device 12 may comprise a single step, such as pressing a single button, or more than one step, such as pressing a button and concurrently applying one's fingerprint on a fingerprint scanner provided over the button, or typing in a PIN on a keypad provided on the portable electronic device. However, this control device triggering operation is accomplished in a same manner notwithstanding whether a data exchange between portable electronic device 10 and an external data exchange device 9 is to be accomplished, or whether a data conveyance occurs exclusively within portable electronic device 10, between electronic circuit 14 and screen 16. Consequently, it can be said that control device 12 will issue an invariable activation command when it is triggered, even if control device 12 may include more than one button, biometric parameter detector, etc... that need to be concurrently or sequentially activated for control device 12 to issue a single, invariable activation command. Of course, this single invariable activation command will trigger alternate data conveyance operations responsively to the reception or non-reception of an activation cue, so ulterior alternate commands within electronic circuit 14 will occur depending on the data conveyance operation type, but the initial activation command will not depend on the reception or non-reception of an activation cue.

One example of a particular application of the present invention is the use of a portable electronic device 10 as a quick payment means, such as for paying public transportation fares. In such a case, data exchange device 9 would represent the payment debit machine, and portable electronic device 10 would be a payment card with pre-stored electronic money thereon. When the cardholder would want to use the public transportation services, he would approach the area of access to public transportation where a debit machine 9 would be provided. Debit machine 9 would continuously, or at regular time intervals, or when prompted to do so, emit an activation cue in the form of a predetermined contactless data transmission. Upon the cardholder approaching his payment card within a range allowing it to receive the activation cue from the debit machine, he could then trigger his control device 12 whereby a data exchange in the form of an electronic money transaction would occur between the payment card 10 and the debit machine 9. This data exchange could include any type of information required for electronic money transactions, as known in the art. For

example, the following data exchange could occur, in addition to the reception of the activation cue:

- a message is sent from portable electronic device 10 to debit machine 9 to inquire as to the fare for passage;
- the fare for passage is transferred from debit machine 9 to payment card 10;
- after verification by the card electronic circuit 14 that the card memory 42 still stores a sufficient amount of electronic money, payment card 10 then sends a right-of-passage message to data exchange device 9; and
- debit machine 9 sends a confirmation of right-of-passage to payment card 10, the latter then debiting the passage fare from the total electronic money amount stored in the card memory 42. Debit machine 9 also sends the required information to an exterior passage control device to allow passage of the cardholder to the public transportation services.

If, on the other hand, control device 12 is triggered at any time when switching element 44b is in its inactive state, i.e. not within the activation cue emission range of a public transportation service debit machine 9, then data from electronic circuit 14 will be sent to display screen 16 to display the total amount of electronic money remaining in card memory 42. No data exchange with an external debit machine would then be attempted by card 10.

Thus, in the above example, upon triggering control device 12, an invariable activation command would be issued that would result in two different possible data conveyance operations: if an activation cue has been previously received from a nearby debit machine 9, payment for right-of-passage would be made to allow the cardholder to use the public transportation services; on the other hand, if no activation cue has been previously received from a debit machine 9, then verification of the electronic money amount stored on the card memory 42 would be made.

Portable electronic device 10 could also have a plethora of other alternate purposes. For example, portable identification device 10 could be used as an electronic passport. This passport, when its control device is triggered, could be used to transmit identification data of the electronic passport owner to a data exchange device 9 if an activation cue has been received by the electronic passport, or to simply display this

information on the display screen of the electronic passport if no activation cue has been received by the electronic passport.

The present invention is thus particularly advantageous, in that the portable electronic device holder needs only trigger control device 12 to issue an invariable activation command, for either the data exchange or the data display to occur. By means of the switching element 44b and transceiver 18 acting as a cue receiver, both located on portable electronic device 10, the proper data conveyance within portable transaction device will occur automatically upon this invariable activation command being issued. Thus, no alternate controls need to be provided on the portable electronic device 10. However, in one embodiment, other controls could be provided on portable electronic device 10 for accomplishing additional actions with portable electronic device 10.

It is noted that the data downloaded to an external data exchange device 9 during a data exchange therewith, and the data conveyed internally from electronic circuit 14 to display screen 16, may be the same data (as is the case in the above example of the electronic passport) or different data (as is the case in the above example of the payment card), depending on the purpose of portable electronic device 10.

The state of switching element 44b may be reset to its default inactive state upon one or more pre-determined conditions being met. In the embodiment where electronic circuit 14 is a microchip, these conditions may be programmed therein. For example, electronic circuit 14 may send a reset command to switching element 44b at regular time intervals, or a certain amount of time after switching element 44b has switched to its activated state.

According to one embodiment, when switching element 44b is in its activated state, upon selective triggering of control device 12, in addition to a data exchange occurring with an external data exchange device, an internal data conveyance from electronic circuit 14 to display screen 16 would also occur. Thus, according to this embodiment, an internal data conveyance would not be exclusive to the inactive state of switching element 44b, while a data exchange with an external data exchange device would be exclusive to the activated state of switching element 44b. In the above example of the payment card, this alternative of the invention would have the

remaining amount of electronic money in the payment card displayed concurrently when a passage fare is paid with the card.

Figure 3 shows an alternate data exchange system 8' comprising an alternate embodiment of a portable electronic device 10' and an alternate data exchange device 9', wherein elements that are similar to those of the first embodiment have primed reference numerals. Portable electronic device 10' includes a transceiver that comprises multiple communication ports, namely a data transmitter 18a, a data receiver 18b, and a cue receiver 19.

Data transmitter 18a and data receiver 18b could use distinct communication modes. For example, transmitter 18a could be a radio wave transmitter, and receiver 18b could be an infrared wave receiver.

Cue receiver 19, which is distinct from data receiver 18b in the embodiment of figure 3, can be of any type suitable for receiving an activation cue from data exchange device 9'. Data exchange device 9' is equipped with a corresponding cue emitter 9b. For example, cue emitter 9b can be a data transmission device emitting data by means of a different medium than that used by data receiver 18b - for example cue emitter 9b can emit radio waves while data transceiver 9a could be capable of emitting and receiving infrared waves. Cue receiver 19 could alternately comprise electrical contacts that would cooperate with corresponding electrical contacts 9b. In one embodiment, cue receiver 19 could be a button to be engaged by an automated finger device (the cue emitter 9b) in a slot of the data exchange device in which portable electronic device 10 is to be inserted. In any event, cue receiver 19 represents any suitable structure capable of receiving an activation cue from data exchange device 9', for indicating a data exchange opportunity between portable electronic device 10' and data exchange device 9'.

Any further modification, which does not deviate from the scope of the present invention, is considered to be included therein.

Rec'd PCT/PTO 13 OCT 2005

CLAIMS

1. A portable electronic device, comprising:

- an electronic circuit capable of storing data therein, capable of processing data, and capable of data input and output;
- a control device operatively linked to said electronic circuit, with an invariable activation command being issued when said control device is triggered;
- a user interface device operatively linked to said electronic circuit;
- a data transceiver operatively linked to said electronic circuit;
- a cue receiver for receiving a selectively emitted activation cue from a source external to said portable electronic device;
- a data conveyance switching element operatively linked to said electronic circuit, said switching element being in an activated state upon an activation cue having been received by said cue receiver, and being in an inactive state when no activation cue was received by said cue receiver;

and

- power means for providing power to said portable electronic device;

wherein upon said control device being selectively triggered to issue said invariable activation command:

- if said switching element is in said activated state, a data exchange will be initiated through the instrumentality of said data transceiver for exchanging data between said electronic circuit and an external data exchange device;
- if said switching element is in said inactive state, data will be conveyed from said electronic circuit to said user interface device for communicating information to the portable electronic device holder.

2. A portable electronic device as defined in claim 1, wherein said user interface device is a display screen.

3. A portable electronic device as defined in claim 1, wherein said data transceiver comprises a data transmitter and a data receiver distinct from said data transmitter.

REPLACED BY
ART 34 AMDT

4. A portable electronic device as defined in claim 3, wherein said cue receiver is said data receiver.

5. A portable electronic device as defined in claim 1, wherein said control device is a biometric parameter detector.

6. A portable electronic device as defined in claim 5, wherein said biometric parameter detector is a fingerprint scanner capable of obtaining a fingerprint scan, and whereby said control device is triggered when the fingerprint scan matches a fingerprint image pre-saved in said electronic circuit.

7. A portable electronic device as defined in claim 1, wherein said control device is a manually activated button, and whereby said control device is triggered when the button is pressed.

8. A portable electronic device as defined in claim 1, wherein said electronic circuit comprises said switching element.

9. A portable electronic device as defined in claim 8, wherein said electronic circuit comprises a microchip, and wherein said switching element is a series of instructions programmed onto said microchip.

10. A portable electronic device as defined in claim 1, wherein said switching element comprises a decisional logical circuit.

11. A data exchange system comprising :

- a data exchange device comprising a first electronic circuit, a first data transceiver and a cue emitter; and
- a portable electronic device, comprising:
    - a second electronic circuit capable of storing data therein, capable of processing data, and capable of data input and output;

REPLACED BY ART 34 AMDT

Rec'd PCT/PTO 13 OCT 2005

- a control device operatively linked to said electronic circuit, with an invariable activation command being issued when said control device is triggered;
- a user interface device operatively linked to said electronic circuit;
- a second data transceiver operatively linked to said electronic circuit;
- a data conveyance switching element operatively linked to said electronic circuit, said switching element being in an activated state upon an activation cue having been received by said cue receiver, and being in an inactive state when no activation cue was received by said cue receiver;

and

- power means for providing power to said portable electronic device;

wherein upon said control device being selectively triggered to issue said invariable activation command:

- if said switching element is in its activated state, a data exchange will occur between said first data transceiver and said second data transceiver, thereby exchanging data between said data exchange device and said portable electronic device;
- if said switching element is in its inactive state, data is forwarded to said user interface device for communicating information to the portable electronic device holder.

12. A portable electronic device comprising:

- an electronic circuit capable of storing data therein, capable of processing data, and capable of data input and output;
- a control device operatively linked to said electronic circuit, with an invariable activation command being issued when said control device is triggered;
- first and second data conveyance functions programmed in said electronic circuit;
- a cue receiver for receiving a selectively emitted activation cue from a source external to said portable electronic device; and
- power means, for providing power to said portable electronic device;

wherein upon said control device being selectively triggered to issue said invariable activation command, said electronic circuit will accomplish said first data

REPLACED BY
ART 34 AMDT

conveyance function if an activation cue was received by said cue receiver and said second data conveyance function if no cue was received by said cue receiver.

13. A method for data exchange with a portable electronic device of the type comprising: an electronic circuit capable of storing data therein, capable of processing data, and capable of data input and output, a control device operatively linked to said circuit, a user interface device operatively linked to said circuit, communication ports operatively linked to said circuit, a switching element operatively linked to said electronic circuit and being in a default inactive state, and power means for providing power to said portable electronic device, said method comprising the steps of :

- awaiting for an activation cue to be received at a predetermined one of said communication ports;
- if an activation cue is received at one of said communication ports, changing the state of said switching element from its default inactive state to an activated state; and
- selectively triggering said control device to issue an invariable activation command, whereby said method will further comprise one of the two following steps:
    - if said switching element is in its activated state, initiating a data exchange with an external data exchange device through at least one of said communication ports; and
    - if said switching element is in its inactive state, conveying data from said electronic circuit to said user interface device for communicating information to the portable electronic device holder.

14. A method as defined in claim 13,
wherein said activation cue is received at one of said communication ports distinct from another one of said communication ports used for data exchange with the external data exchange device.

15. A method as defined in claim 13,
wherein the additional following step occurs after selectively triggering said control device if said switching element is in said activated state:

REPLACED BY ART 34 AMDT

Rec'd PCT/PTO 13 OCT 2005

- conveying data from said electronic circuit to said user interface device for communicating information to the portable electronic device holder.

REPLACED BY
ART 34 AMDT

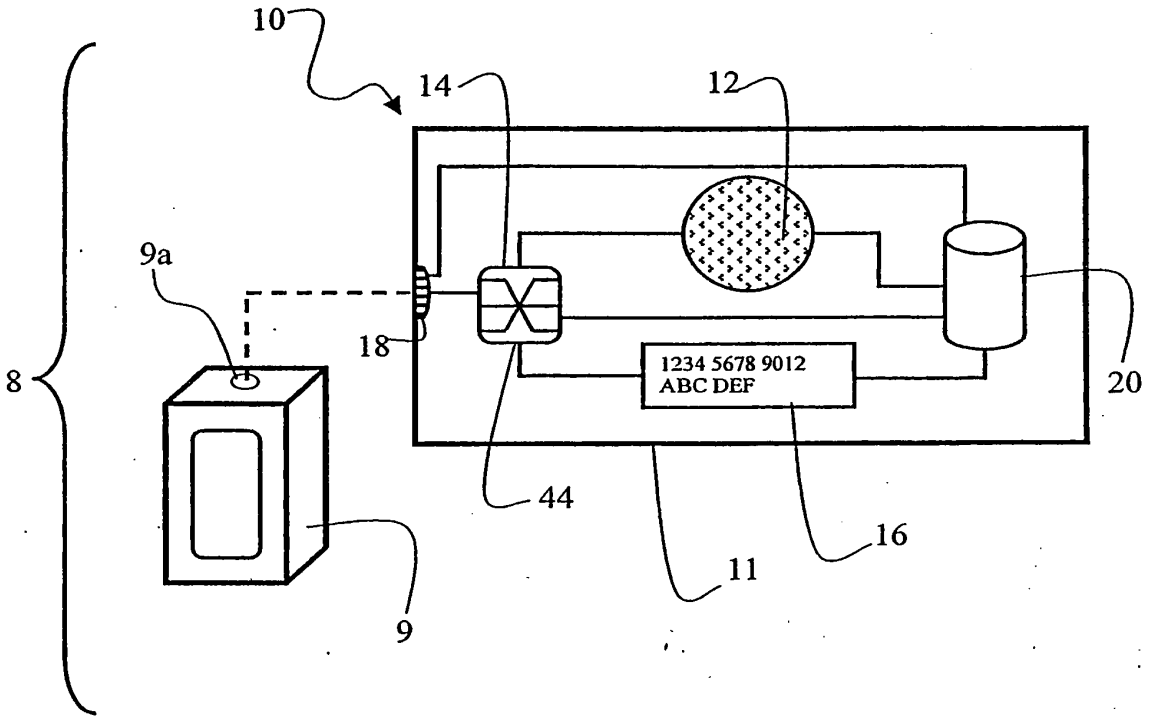

Fig. 1

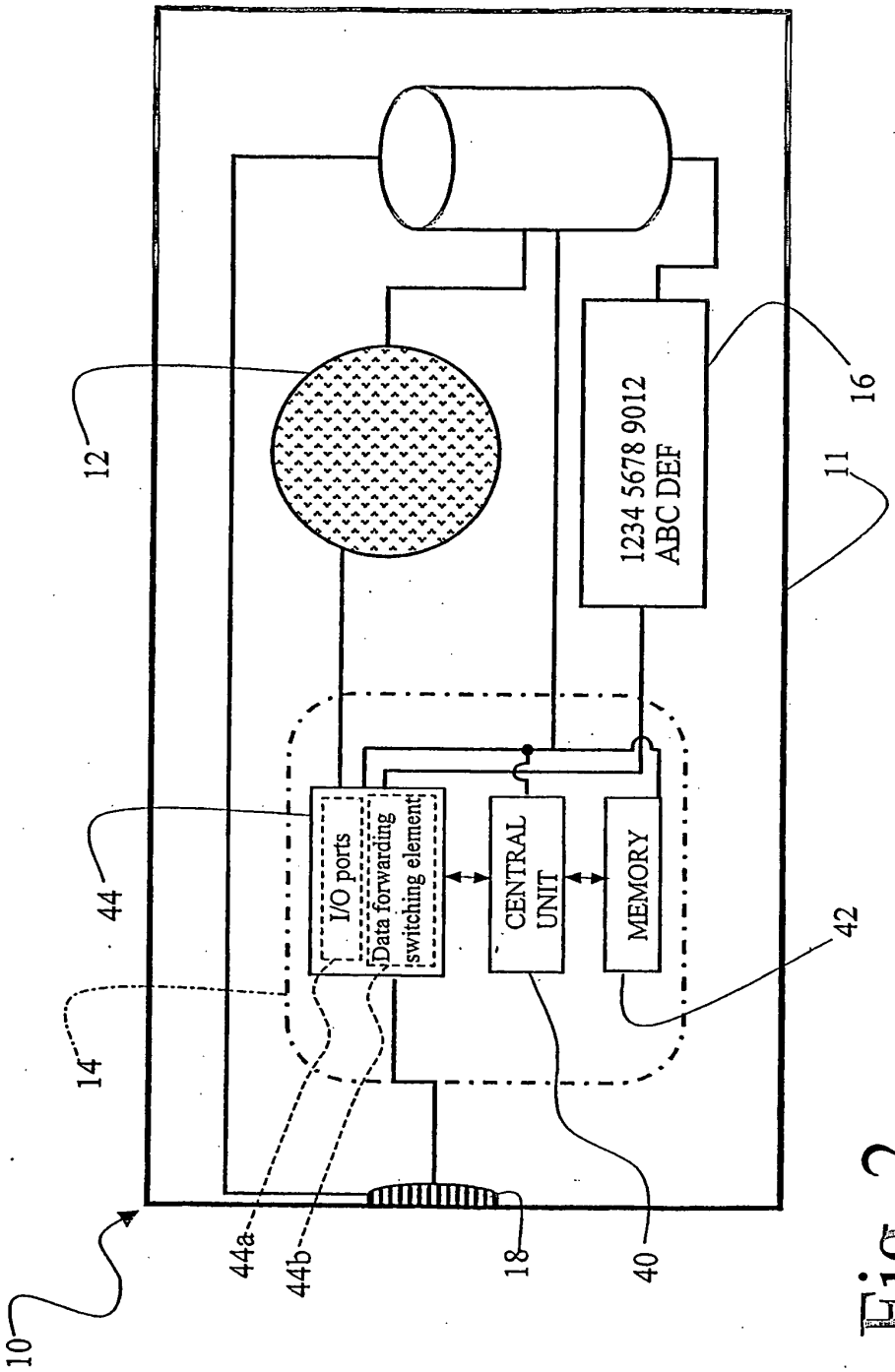
1234 5678 9012
ABC DEF
I/O ports
Data forwarding
switching element
CENTRAL
UNIT
MEMORY
10
11
12
14
16
18
40
42
44
44a
44b

Fig. 2

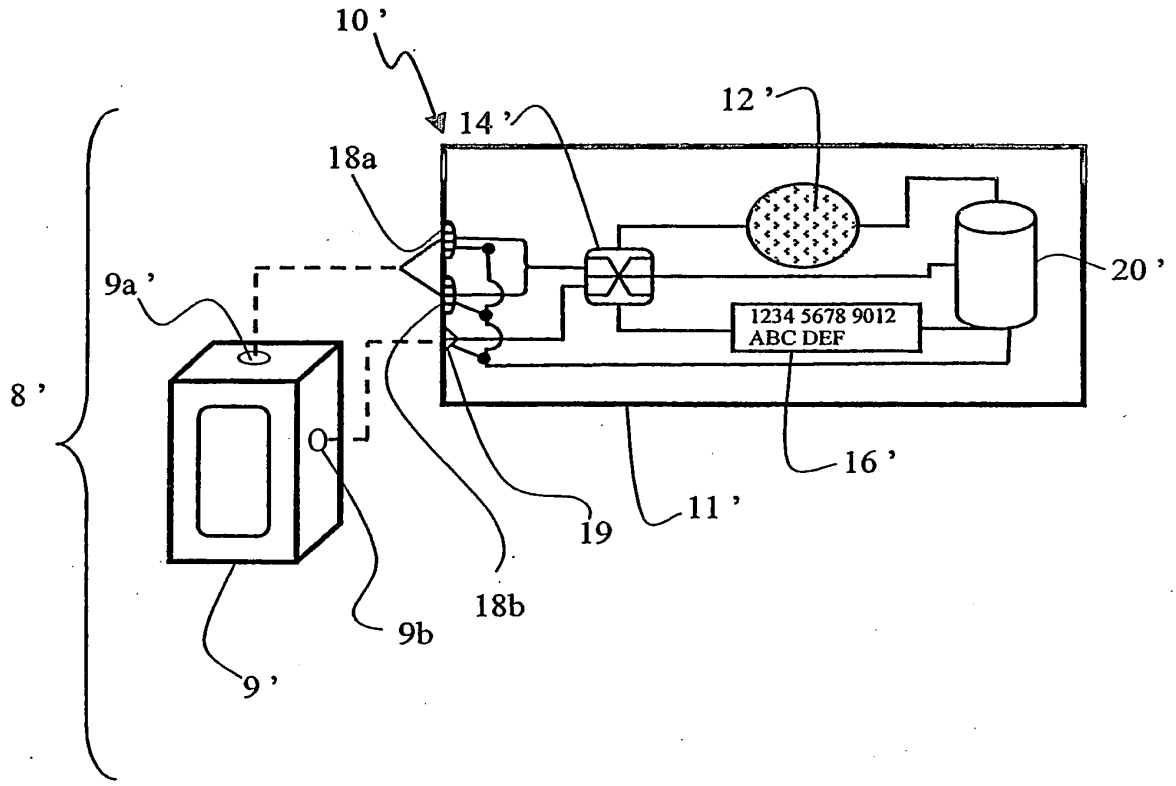

Fig. 3

INTERNATIONAL SEARCH REPORT

Interr Application No
PCT/IB 03/01523

A. CLASSIFICATION OF SUBJECT MATTER
IPC 7 G06K19/07

According to International Patent Classification (IPC) or to both national classification and IPC

B. FIELDS SEARCHED

Minimum documentation searched (classification system followed by classification symbols)
IPC 7 G06K

Documentation searched other than minimum documentation to the extent that such documents are included in the fields searched

Electronic data base consulted during the international search (name of data base and, where practical, search terms used)
EPO-Internal, WPI Data, PAJ

C. DOCUMENTS CONSIDERED TO BE RELEVANT

Category °	Citation of document, with indication, where appropriate, of the relevant passages	Relevant to claim No.
X	DE 101 46 804 A (PHILIPS CORP INTELLECTUAL PTY) 10 April 2003 (2003-04-10) paragraphs '0051!-'0082!; figures 1,3,8,9 ---	1,2,8, 11-13
A	DE 42 05 556 A (ANGEWANDTE DIGITAL ELEKTRONIK) 26 August 1993 (1993-08-26) column 1, line 40 -column 2, line 61 ---	1,11-13
A	US 2003/019942 A1 (BLOSSOM GEORGE W) 30 January 2003 (2003-01-30) paragraphs '0015!-'0026!; figure 1 ---	1,11-13
A	DE 42 03 748 A (PROVERA GES FUER PROJEKTIERUNG) 5 August 1993 (1993-08-05) column 2, line 56 -column 3, line 62 ---	1,11-13

-/--

[X] Further documents are listed in the continuation of box C.

[X] Patent family members are listed in annex.

° Special categories of cited documents:

"A" document defining the general state of the art which is not considered to be of particular relevance
"E" earlier document but published on or after the international filing date
"L" document which may throw doubts on priority claim(s) or which is cited to establish the publication date of another citation or other special reason (as specified)
"O" document referring to an oral disclosure, use, exhibition or other means
"P" document published prior to the international filing date but later than the priority date claimed

"T" later document published after the international filing date or priority date and not in conflict with the application but cited to understand the principle or theory underlying the invention
"X" document of particular relevance; the claimed invention cannot be considered novel or cannot be considered to involve an inventive step when the document is taken alone
"Y" document of particular relevance; the claimed invention cannot be considered to involve an inventive step when the document is combined with one or more other such documents, such combination being obvious to a person skilled in the art.
"&" document member of the same patent family

Date of the actual completion of the international search	Date of mailing of the international search report
11 December 2003	30/12/2003
Name and mailing address of the ISA European Patent Office, P.B. 5818 Patentlaan 2 NL – 2280 HV Rijswijk Tel. (+31-70) 340-2040, Tx. 31 651 epo nl, Fax: (+31-70) 340-3016	Authorized officer Schauler, M

Form PCT/ISA/210 (second sheet) (July 1992)

INTERNATIONAL SEARCH REPORT

Intern Application No
PCT/IB 03/01523

C.(Continuation) DOCUMENTS CONSIDERED TO BE RELEVANT

Category °	Citation of document, with indication, where appropriate, of the relevant passages	Relevant to claim No.
A	US 6 390 373 B1 (NOLTE KLAUS ET AL) 21 May 2002 (2002-05-21) column 2, line 3-54	1,11-13
A	US 4 800 255 A (IMRAN MIR A) 24 January 1989 (1989-01-24) column 4, line 21-54; figures 2,3	1,11-13

Form PCT/ISA/210 (continuation of second sheet) (July 1992)

INTERNATIONAL SEARCH REPORT

Inter[illegible] Application No
PCT/IB 03/01523

Patent document cited in search report		Publication date	Patent family member(s)		Publication date
DE 10146804	A	10-04-2003	DE	10146804 A1	10-04-2003
			WO	03027949 A1	03-04-2003
DE 4205556	A	26-08-1993	DE	4305571 A1	25-08-1994
			DE	4205556 A1	26-08-1993
			EP	0557934 A2	01-09-1993
			DE	4205827 A1	02-09-1993
			FR	2702065 A1	02-09-1994
			GB	2275554 A ,B	31-08-1994
US 2003019942	A1	30-01-2003	NONE		
DE 4203748	A	05-08-1993	DE	4203748 A1	05-08-1993
US 6390373	B1	21-05-2002	AT	235721 T	15-04-2003
			AU	2845997 A	03-07-1997
			DE	59610279 D1	30-04-2003
			WO	9722084 A1	19-06-1997
			EP	0867014 A1	30-09-1998
			JP	2000501862 T	15-02-2000
US 4800255	A	24-01-1989	CA	1328499 C	12-04-1994

CLAIMS

1. A portable electronic device, comprising:

- an electronic circuit capable of storing data therein, capable of processing data, and capable of data input and output;
- a control device operatively linked to said electronic circuit, with an invariable activation command being issued when said control device is selectively triggered;
- a user interface device operatively linked to said electronic circuit;
- a data transceiver operatively linked to said electronic circuit, said data transceiver being for exchanging data between said electronic circuit and an external data exchange device, and for receiving a selectively emitted activation cue from a source external to said portable electronic device;
- a data conveyance switching element operatively linked to said electronic circuit, said switching element being in an activated state upon an activation cue having been received by said data transceiver, and being in an inactive state when no activation cue was received by said data transceiver;

and

- power means for providing power to said portable electronic device;

wherein upon said control device being selectively triggered to issue said invariable activation command:

- if said switching element is in said activated state, a data exchange will be initiated through the instrumentality of said data transceiver for exchanging data between said electronic circuit and an external data exchange device;
- if said switching element is in said inactive state, data will be conveyed from said electronic circuit to said user interface device for communicating information to the portable electronic device holder.

2. A portable electronic device as defined in claim 1,
wherein said user interface device is a display screen.

3. A portable electronic device as defined in claim 1,
wherein said data transceiver comprises a data transmitter, a data receiver distinct from said data transmitter, and a cue receiver distinct from said data receiver.

4. A portable electronic device as defined in claim 1,
wherein said control device is a biometric parameter detector.

5. A portable electronic device as defined in claim 4,
wherein said biometric parameter detector is a fingerprint scanner capable of obtaining a fingerprint scan, and whereby said control device is triggered when the fingerprint scan matches a fingerprint image pre-saved in said electronic circuit.

6. A portable electronic device as defined in claim 1,
wherein said control device is a manually activated button, and whereby said control device is triggered when the button is pressed.

7. A portable electronic device as defined in claim 1,
wherein said electronic circuit comprises said switching element.

8. A portable electronic device as defined in claim 7,
wherein said electronic circuit comprises a microchip, and wherein said switching element is a series of instructions programmed onto said microchip.

9. A portable electronic device as defined in claim 1,
wherein said switching element comprises a logical circuit.

10. A data exchange system comprising :
- a data exchange device comprising a first electronic circuit, a first data transceiver and a cue emitter; and
- a portable electronic device, comprising:
    - a second electronic circuit capable of storing data therein, capable of processing data, and capable of data input and output;
    - a control device operatively linked to said second electronic circuit, with an invariable activation command being issued when said control device is selectively triggered;
    - a user interface device operatively linked to said second electronic circuit;

- a second data transceiver operatively linked to said second electronic circuit;
- a data conveyance switching element operatively linked to said second electronic circuit, said switching element being in an activated state upon an activation cue having been received by said second data transceiver, and being in an inactive state when no activation cue was received by said second data transceiver;

and

- power means for providing power to said portable electronic device;

wherein upon said control device being selectively triggered to issue said invariable activation command:

- if said switching element is in its activated state, a data exchange will occur between said first data transceiver and said second data transceiver, thereby exchanging data between said data exchange device and said portable electronic device;
- if said switching element is in its inactive state, data is forwarded to said user interface device for communicating information to the portable electronic device holder.

11. A portable electronic device comprising:

- an electronic circuit capable of storing data therein, capable of processing data, and capable of data input and output;
- a control device operatively linked to said electronic circuit, with an invariable activation command being issued when said control device is selectively triggered;
- first and second data conveyance functions programmed in said electronic circuit;
- a cue receiver for receiving a selectively emitted activation cue from a source external to said portable electronic device; and
- power means, for providing power to said portable electronic device;

wherein upon said control device being selectively triggered to issue said invariable activation command, said electronic circuit will accomplish said first data conveyance function if an activation cue was received by said cue receiver and said second data conveyance function if no cue was received by said cue receiver.

12. A method for data exchange with a portable electronic device of the type comprising: an electronic circuit capable of storing data therein, capable of processing data, and capable of data input and output, a control device operatively linked to said circuit, a user interface device operatively linked to said circuit, communication ports operatively linked to said

circuit, a switching element operatively linked to said electronic circuit and being in a default inactive state, and power means for providing power to said portable electronic device, said method comprising the steps of :

- awaiting for an activation cue to be received at a predetermined one of said communication ports;
- if an activation cue is received at one of said communication ports, changing the state of said switching element from its default inactive state to an activated state; and
- selectively triggering said control device to issue an invariable activation command, whereby said method will further comprise one of the two following steps:
    - if said switching element is in its activated state, initiating a data exchange with an external data exchange device through at least one of said communication ports; and
    - if said switching element is in its inactive state, conveying data from said electronic circuit to said user interface device for communicating information to the portable electronic device holder.

13. A method as defined in claim 12,
wherein said activation cue is received at one of said communication ports distinct from another one of said communication ports used for data exchange with the external data exchange device.

14. A method as defined in claim 12,
wherein the additional following step occurs after selectively triggering said control device if said switching element is in said activated state:

- conveying data from said electronic circuit to said user interface device for communicating information to the portable electronic device holder.

Rec'd PCT/PTO 13 OCT 2005

PATENT COOPERATION TREATY

From the INTERNATIONAL SEARCHING AUTHORITY

To:
CABINET NITHARDT & BURKARD
Attn. Nithardt Roland
B.P. 1445
68071 MULHOUSE CEDEX
FRANCE

PCT

NOTIFICATION OF TRANSMITTAL OF THE INTERNATIONAL SEARCH REPORT OR THE DECLARATION

(PCT Rule 44.1)

-5 JAN 2004

Date of mailing *(day/month/year)* 30/12/2003	
Applicant's or agent's file reference BR 18364/IN	**FOR FURTHER ACTION** See paragraphs 1 and 4 below
International application No. PCT/IB 03/01523	International filing date *(day/month/year)* 14/04/2003
Applicant G. HOLDINGS LTD.	

1. [x] The applicant is hereby notified that the International Search Report has been established and is transmitted herewith.

Filing of amendments and statement under Article 19:
The applicant is entitled, if he so wishes, to amend the claims of the International Application (see Rule 46):

When? The time limit for filing such amendments is normally 2 months from the date of transmittal of the International Search Report; however, for more details, see the notes on the accompanying sheet.

Where? Directly to the International Bureau of WIPO
34, chemin des Colombettes
1211 Geneva 20, Switzerland
Fascimile No.: (41-22) 740.14.35

For more detailed instructions, see the notes on the accompanying sheet.

2. [ ] The applicant is hereby notified that no International Search Report will be established and that the declaration under Article 17(2)(a) to that effect is transmitted herewith.

3. [ ] **With regard to the protest** against payment of (an) additional fee(s) under Rule 40.2, the applicant is notified that:

[ ] the protest together with the decision thereon has been transmitted to the International Bureau together with the applicant's request to forward the texts of both the protest and the decision thereon to the designated Offices.

[ ] no decision has been made yet on the protest; the applicant will be notified as soon as a decision is made.

4. **Further action(s):** The applicant is reminded of the following:

Shortly after **18 months** from the priority date, the international application will be published by the International Bureau. If the applicant wishes to avoid or postpone publication, a notice of withdrawal of the international application, or of the priority claim, must reach the International Bureau as provided in Rules 90*bis*.1 and 90*bis*.3, respectively, before the completion of the technical preparations for international publication.

Within **19 months** from the priority date, a demand for international preliminary examination must be filed if the applicant wishes to postpone the entry into the national phase until 30 months from the priority date (in some Offices even later).

Within **20 months** from the priority date, the applicant must perform the prescribed acts for entry into the national phase before all designated Offices which have not been elected in the demand or in a later election within 19 months from the priority date or could not be elected because they are not bound by Chapter II.

Name and mailing address of the International Searching Authority European Patent Office, P.B. 5818 Patentlaan 2 NL-2280 HV Rijswijk Tel. (+31-70) 340-2040, Tx. 31 651 epo nl, Fax: (+31-70) 340-3016	Authorized officer Mark Quinn

Form PCT/ISA/220 (July 1998)

NOTES TO FORM PCT/ISA/220

These Notes are intended to give the basic instructions concerning the filing of amendments under article 19. The Notes are based on the requirements of the Patent Cooperation Treaty, the Regulations and the Administrative Instructions under that Treaty. In case of discrepancy between these Notes and those requirements, the latter are applicable. For more detailed information, see also the PCT Applicant's Guide, a publication of WIPO.

In these Notes, "Article", "Rule", and "Section" refer to the provisions of the PCT, the PCT Regulations and the PCT Administrative Instructions respectively.

INSTRUCTIONS CONCERNING AMENDMENTS UNDER ARTICLE 19

The applicant has, after having received the international search report, one opportunity to amend the claims of the international application. It should however be emphasized that, since all parts of the international application (claims, description and drawings) may be amended during the international preliminary examination procedure, there is usually no need to file amendments of the claims under Article 19 except where, e.g. the applicant wants the latter to be published for the purposes of provisional protection or has another reason for amending the claims before international pbulication. Furthermore, it should be emphasized that provisional protection is available in some States only.

What parts of the International application may be amended?

Under Article 19, only the claims may be amended.

During the international phase, the claims may also be amended (or further amended) under Article 34 before the International Preliminary Examining Authority. The description and drawings may only be amended under Article 34 before the International Examining Authority.

Upon entry into the national phase, all parts of the international application may be amended under Article 28 or, where applicable, Article 41.

When? Within 2 months from the date of transmittal of the international search report or 16 months from the priority date, whichever time limit expires later. It should be noted, however, that the amendments will be considered as having been received on time if they are received by the International Bureau after the expiration of the applicable time limit but before the completion of the technical preparations for international publication (Rule 46.1).

Where not to file the amendments?

The amendments may only be filed with the International Bureau and not with the receiving Office or the International Searching Authority (Rule 46.2).

Where a demand for international preliminary examination has been/is filed, see below.

How? Either by cancelling one or more entire claims, by adding one or more new claims or by amending the text of one or more of the claims as filed.

A replacement sheet must be submitted for each sheet of the claims which, on account of an amendment or amendments, differs from the sheet originally filed.

All the claims appearing on a replacement sheet must be numbered in Arabic numerals. Where a claim is cancelled, no renumbering of the other claims is required. In all cases where claims are renumbered, they must be renumbered consecutively (Administrative Instructions, Section 205(b)).

The amendments must be made in the language in which the international application is to be published.

What documents must/may accompany the amendments?

Letter (Section 205(b)):

The amendments must be submitted with a letter.

The letter will not be published with the international application and the amended claims. It should not be confused with the "Statement under Article 19(1)" (see below, under "Statement under Article 19(1)").

The letter must be in English or French, at the choice of the applicant. However, if the language of the international application is English, the letter must be in English; if the language of the international application is French, the letter must be in French.

The letter must indicate the differences between the claims as filed and the claims as amended. It must, in particular, indicate, in connection with each claim appearing in the international application (it being understood that identical indications concerning several claims may be grouped),whether

(i) the claim is unchanged;

(ii) the claim is cancelled;

(iii) the claim is new;

(iv) the claim replaces one or more claims as filed;

(v) the claim is the result of the division of a claim as filed.

The following examples illustrate the manner in which amendments must be explained in the accompanying letter:

1. [Where originally there were 48 claims and after amendment of some claims there are 51]:
"Claims 1 to 29, 31, 32, 34, 35, 37 to 48 replaced by amended claims bearing the same numbers; claims 30, 33 and 36 unchanged; new claims 49 to 51 added."

2. [Where originally there were 15 claims and after amendment of all claims there are 11]:
"Claims 1 to 15 replaced by amended claims 1 to 11."

3. [Where originally there were 14 claims and the amendments consist in cancelling some claims and in adding new claims]:
"Claims 1 to 6 and 14 unchanged; claims 7 to 13 cancelled; new claims 15, 16 and 17 added." or
"Claims 7 to 13 cancelled; new claims 15, 16 and 17 added; all other claims unchanged."

4. [Where various kinds of amendments are made]:
"Claims 1-10 unchanged; claims 11 to 13, 18 and 19 cancelled; claims 14, 15 and 16 replaced by amended claim 14; claim 17 subdivided into amended claims 15, 16 and 17; new claims 20 and 21 added."

"Statement under article 19(1)" (Rule 46.4)

The amendments may be accompanied by a statement explaining the amendments and indicating any impact that such amendments might have on the description and the drawings (which cannot be amended under Article 19(1)).

The statement will be published with the international application and the amended claims.

It must be in the language in which the international appplication is to be published.

It must be brief, not exceeding 500 words if in English or if translated into English.

It should not be confused with and does not replace the letter indicating the differences between the claims as filed and as amended. It must be filed on a separate sheet and must be identified as such by a heading, preferably by using the words "Statement under Article 19(1)."

It may not contain any disparaging comments on the international search report or the relevance of citations contained in that report. Reference to citations, relevant to a given claim, contained in the international search report may be made only in connection with an amendment of that claim.

Consequence if a demand for international preliminary examination has already been filed

If, at the time of filing any amendments under Article 19, a demand for international preliminary examination has already been submitted, the applicant must preferably, at the same time of filing the amendments with the International Bureau, also file a copy of such amendments with the International Preliminary Examining Authority (see Rule 62.2(a), first sentence).

Consequence with regard to translation of the international application for entry into the national phase

The applicant's attention is drawn to the fact that, where upon entry into the national phase, a translation of the claims as amended under Article 19 may have to be furnished to the designated/elected Offices, instead of, or in addition to, the translation of the claims as filed.

For further details on the requirements of each designated/elected Office, see Volume II of the PCT Applicant's Guide.

PATENT COOPERATION TREATY

PCT

INTERNATIONAL SEARCH REPORT

(PCT Article 18 and Rules 43 and 44)

Applicant's or agent's file reference BR 18364/IN	**FOR FURTHER ACTION** see Notification of Transmittal of International Search Report (Form PCT/ISA/220) as well as, where applicable, item 5 below.	
International application No. PCT/IB 03/01523	International filing date *(day/month/year)* 14/04/2003	(Earliest) Priority Date *(day/month/year)*
Applicant G. HOLDINGS LTD.		

This International Search Report has been prepared by this International Searching Authority and is transmitted to the applicant according to Article 18. A copy is being transmitted to the International Bureau.

This International Search Report consists of a total of 5 sheets.

[X] It is also accompanied by a copy of each prior art document cited in this report.

1. **Basis of the report**
   a. With regard to the **language**, the international search was carried out on the basis of the international application in the language in which it was filed, unless otherwise indicated under this item.
      [ ] the international search was carried out on the basis of a translation of the international application furnished to this Authority (Rule 23.1(b)).
   b. With regard to any **nucleotide and/or amino acid sequence** disclosed in the international application, the international search was carried out on the basis of the sequence listing :
      [ ] contained in the international application in written form.
      [ ] filed together with the international application in computer readable form.
      [ ] furnished subsequently to this Authority in written form.
      [ ] furnished subsequently to this Authority in computer readble form.
      [ ] the statement that the subsequently furnished written sequence listing does not go beyond the disclosure in the international application as filed has been furnished.
      [ ] the statement that the information recorded in computer readable form is identical to the written sequence listing has been furnished

2. [ ] **Certain claims were found unsearchable** (See Box I).
3. [ ] **Unity of invention is lacking** (see Box II).

4. With regard to the **title**,
   [X] the text is approved as submitted by the applicant.
   [ ] the text has been established by this Authority to read as follows:

5. With regard to the **abstract**,
   [ ] the text is approved as submitted by the applicant.
   [X] the text has been established, according to Rule 38.2(b), by this Authority as it appears in Box III. The applicant may, within one month from the date of mailing of this international search report, submit comments to this Authority.

6. The figure of the **drawings** to be published with the abstract is Figure No. 1
   [X] as suggested by the applicant.
   [ ] because the applicant failed to suggest a figure.
   [ ] because this figure better characterizes the invention.
   [ ] None of the figures.

Form PCT/ISA/210 (first sheet) (July 1998)

Box III TEXT OF THE ABSTRACT (Continuation of item 5 of the first sheet)

The portable electronic device (10) comprises an electronic circuit capable of storing data therein, capable of processing data, and capable of data input and output; a control device (12) operatively linked to the electronic circuit (14), with an invariable activation command being issued when the control device is triggered; first and second data conveyance functions programmed in the electronic circuit; a cue receiver (18) for receiving a selectively emitted activation cue from a source (9) external to the portable electronic device; and a power connector or an internal power source (20) for providing power to the portable electronic device. In use, upon the control device being selectively triggered to issue the invariable activation command, the electronic circuit will accomplish the first data conveyance function if an activation cue was received by the cue receiver and the second data conveyance function if no cue was received by the cue receiver .

INTERNATIONAL SEARCH REPORT

International Application No
PCT/IB 03/01523

A. CLASSIFICATION OF SUBJECT MATTER
IPC 7 G06K19/07

According to International Patent Classification (IPC) or to both national classification and IPC

B. FIELDS SEARCHED

Minimum documentation searched (classification system followed by classification symbols)
IPC 7 G06K

Documentation searched other than minimum documentation to the extent that such documents are included in the fields searched

Electronic data base consulted during the international search (name of data base and, where practical, search terms used)

EPO-Internal, WPI Data, PAJ

C. DOCUMENTS CONSIDERED TO BE RELEVANT

Category °	Citation of document, with indication, where appropriate, of the relevant passages	Relevant to claim No.
X	DE 101 46 804 A (PHILIPS CORP INTELLECTUAL PTY) 10 April 2003 (2003-04-10) paragraphs '0051!-'0082!; figures 1,3,8,9 ---	1,2,8, 11-13
A	DE 42 05 556 A (ANGEWANDTE DIGITAL ELEKTRONIK) 26 August 1993 (1993-08-26) column 1, line 40 -column 2, line 61 ---	1,11-13
A	US 2003/019942 A1 (BLOSSOM GEORGE W) 30 January 2003 (2003-01-30) paragraphs '0015!-'0026!; figure 1 ---	1,11-13
A	DE 42 03 748 A (PROVERA GES FUER PROJEKTIERUNG) 5 August 1993 (1993-08-05) column 2, line 56 -column 3, line 62 ---	1,11-13

-/--

[X] Further documents are listed in the continuation of box C.

[X] Patent family members are listed in annex.

° Special categories of cited documents :

"A" document defining the general state of the art which is not considered to be of particular relevance
"E" earlier document but published on or after the international filing date
"L" document which may throw doubts on priority claim(s) or which is cited to establish the publication date of another citation or other special reason (as specified)
"O" document referring to an oral disclosure, use, exhibition or other means
"P" document published prior to the international filing date but later than the priority date claimed

"T" later document published after the international filing date or priority date and not in conflict with the application but cited to understand the principle or theory underlying the invention
"X" document of particular relevance; the claimed invention cannot be considered novel or cannot be considered to involve an inventive step when the document is taken alone
"Y" document of particular relevance; the claimed invention cannot be considered to involve an inventive step when the document is combined with one or more other such documents, such combination being obvious to a person skilled in the art.
"&" document member of the same patent family

Date of the actual completion of the international search	Date of mailing of the international search report
11 December 2003	30/12/2003
Name and mailing address of the ISA European Patent Office, P.B. 5818 Patentlaan 2 NL – 2280 HV Rijswijk Tel. (+31-70) 340-2040, Tx. 31 651 epo nl, Fax: (+31-70) 340-3016	Authorized officer Schauler, M

1

Form PCT/ISA/210 (second sheet) (July 1992)

INTERNATIONAL SEARCH REPORT

International Application No
PCT/IB 03/01523

C.(Continuation) DOCUMENTS CONSIDERED TO BE RELEVANT

Category °	Citation of document, with indication, where appropriate, of the relevant passages	Relevant to claim No.
A	US 6 390 373 B1 (NOLTE KLAUS ET AL) 21 May 2002 (2002-05-21) column 2, line 3-54 ---	1,11-13
A	US 4 800 255 A (IMRAN MIR A) 24 January 1989 (1989-01-24) column 4, line 21-54; figures 2,3 -----	1,11-13

1

Form PCT/ISA/210 (continuation of second sheet) (July 1992)

INTERNATIONAL SEARCH REPORT

Information on patent family members

International Application No
PCT/IB 03/01523

Patent document cited in search report		Publication date	Patent family member(s)			Publication date
DE 10146804	A	10-04-2003	DE	10146804	A1	10-04-2003
			WO	03027949	A1	03-04-2003
DE 4205556	A	26-08-1993	DE	4305571	A1	25-08-1994
			DE	4205556	A1	26-08-1993
			EP	0557934	A2	01-09-1993
			DE	4205827	A1	02-09-1993
			FR	2702065	A1	02-09-1994
			GB	2275554	A ,B	31-08-1994
US 2003019942	A1	30-01-2003	NONE			
DE 4203748	A	05-08-1993	DE	4203748	A1	05-08-1993
US 6390373	B1	21-05-2002	AT	235721	T	15-04-2003
			AU	2845997	A	03-07-1997
			DE	59610279	D1	30-04-2003
			WO	9722084	A1	19-06-1997
			EP	0867014	A1	30-09-1998
			JP	2000501862	T	15-02-2000
US 4800255	A	24-01-1989	CA	1328499	C	12-04-1994

Form PCT/ISA/210 (patent family annex) (July 1992)

Rec'd PCT/PTO 13 OCT 2005

REC'D 01 SEP 2005

WIPO PCT

PATENT COOPERATION TREATY

PCT

INTERNATIONAL PRELIMINARY EXAMINATION REPORT

(PCT Article 36 and Rule 70)

Applicant's or agent's file reference BR 18364/IN	**FOR FURTHER ACTION** See Notification of Transmittal of International Preliminary Examination Report (Form PCT/IPEA/416)	
International application No. PCT/IB 03/01523	International filing date *(day/month/year)* 14.04.2003	Priority date *(day/month/year)* 14.04.2003
International Patent Classification (IPC) or both national classification and IPC G06K19/07		
Applicant G. HOLDINGS LTD.		

1. This international preliminary examination report has been prepared by this International Preliminary Examining Authority and is transmitted to the applicant according to Article 36.

2. This REPORT consists of a total of 5 sheets, including this cover sheet.

   ☒ This report is also accompanied by ANNEXES, i.e. sheets of the description, claims and/or drawings which have been amended and are the basis for this report and/or sheets containing rectifications made before this Authority (see Rule 70.16 and Section 607 of the Administrative Instructions under the PCT).

   These annexes consist of a total of 4 sheets.

3. This report contains indications relating to the following items:

   - I ☒ Basis of the opinion
   - II ☐ Priority
   - III ☐ Non-establishment of opinion with regard to novelty, inventive step and industrial applicability
   - IV ☐ Lack of unity of invention
   - V ☒ Reasoned statement under Rule 66.2(a)(ii) with regard to novelty, inventive step or industrial applicability; citations and explanations supporting such statement
   - VI ☐ Certain documents cited
   - VII ☐ Certain defects in the international application
   - VIII ☐ Certain observations on the international application

Date of submission of the demand 08.11.2004	Date of completion of this report 31.08.2005
Name and mailing address of the international preliminary examining authority: European Patent Office D-80298 Munich Tel. +49 89 2399 - 0 Tx: 523656 epmu d Fax: +49 89 2399 - 4465	Authorized Officer Schauler, M Telephone No. +49 89 2399-7394

m PCT/IPEA/409 (Cover Sheet) (January 2004)

I. Basis of the report

1. With regard to the **elements** of the international application *(Replacement sheets which have been furnished to the receiving Office in response to an invitation under Article 14 are referred to in this report as "originally filed" and are not annexed to this report since they do not contain amendments (Rules 70.16 and 70.17))*:

Description, Pages

1-14 as originally filed

Claims, Numbers

1-14 received on 22.07.2005 with letter of 19.07.2005

Drawings, Sheets

1/3-3/3 as originally filed

2. With regard to the **language**, all the elements marked above were available or furnished to this Authority in the language in which the international application was filed, unless otherwise indicated under this item.

   These elements were available or furnished to this Authority in the following language: , which is:

   - ☐ the language of a translation furnished for the purposes of the international search (under Rule 23.1(b)).
   - ☐ the language of publication of the international application (under Rule 48.3(b)).
   - ☐ the language of a translation furnished for the purposes of international preliminary examination (under Rule 55.2 and/or 55.3).

3. With regard to any **nucleotide and/or amino acid sequence** disclosed in the international application, the international preliminary examination was carried out on the basis of the sequence listing:

   - ☐ contained in the international application in written form.
   - ☐ filed together with the international application in computer readable form.
   - ☐ furnished subsequently to this Authority in written form.
   - ☐ furnished subsequently to this Authority in computer readable form.
   - ☐ The statement that the subsequently furnished written sequence listing does not go beyond the disclosure in the international application as filed has been furnished.
   - ☐ The statement that the information recorded in computer readable form is identical to the written sequence listing has been furnished.

4. The amendments have resulted in the cancellation of:

   - ☐ the description, pages:
   - ☒ the claims, Nos.: 15
   - ☐ the drawings, sheets:

5. ☐ This report has been established as if (some of) the amendments had not been made, since they have been considered to go beyond the disclosure as filed (Rule 70.2(c)).

   (Any replacement sheet containing such amendments must be referred to under item 1 and annexed to this report.)

6. Additional observations, if necessary:

   see separate sheet

V. Reasoned statement under Article 35(2) with regard to novelty, inventive step or industrial applicability; citations and explanations supporting such statement

1. Statement

Novelty (N)	Yes:	Claims	3
	No:	Claims	1,2,4-14
Inventive step (IS)	Yes:	Claims	-
	No:	Claims	1-14
Industrial applicability (IA)	Yes:	Claims	1-14
	No:	Claims	-

2. Citations and explanations

   see separate sheet

Re Item V

Reasoned statement with regard to novelty, inventive step or industrial applicability; citations and explanations supporting such statement

Reference is made to the following document:

D1: DE 101 46 804 A (PHILIPS CORP INTELLECTUAL PTY) 10 April 2003 (2003-04-10)

The present application does not meet the criteria of Article 33(1) PCT, because the subject-matter of claims 1 and 10-14 is not new in the sense of Article 33(2) PCT.

The document D1 discloses a portable electronic device comprising: (the references in parentheses applying to this document):
- an electronic circuit (1) capable of storing data, capable of processing data and capable of data input (from data transceiver 3) and output (to display device 2).
- a control device (9) linked to said electronic circuit (1)
- a user interface (display 2) linked to said electronic circuit (1)
- a data transceiver (3) linked to said electronic circuit (1), said data transceiver being for exchange data between the electronic circuit (1) and an external device via interface (4) and for receiving an activation cue (signal voltage 25, cf paragraph [0058])
- a switching element (26) operatively linked to said electronic circuit, said switching element being in an activated state upon an activation cue (signal voltage 25) having been received by said data transceiver, and being inactive otherwise.
- power means for providing power (cf paragraph [0057])
- if said switching element is activated, data exchange will be initiated through said transceiver for exchanging data (cf Fig 2)
- if said switching element is in inactive state, data will be conveyed to the user interface (cf Fig 3)

Hence, the subject-matter of claims 1 and 10-14 is not new.

The document D1 further discloses:
- the use of a display as user interface device

- the use of biometric parameters for activation of the device ([0045])
- the control device being a button ([0053])
- the switching element comprising a logical circuit ("switching logic" [0058])

Hence, the subject-matter of claims 2 and 4-9 is not new .

The feature that the data receiver is distinct from the data transmitter and the cue receiver is distinct from the data receiver is not disclosed in D1, but this is only a small constructional change which the skilled person would regard it a normal design option for a data transceiver device.

Therefore, the subject-matter of claim 3 does not involve an inventive step in the sense of Article 33(3) PCT.

Additional remarks

- The claims are not drafted in two-part-form (Rule 6.3(b) PCT)
- Contrary to the requirements of Rule 5.1(a)(ii) PCT, the relevant background art disclosed in the document D1 is not mentioned in the description, nor is this document identified therein.
- The features of the claims 1-14 are not provided with reference signs placed in parentheses (Rule 6.2(b) PCT).

CLAIMS

1. A portable electronic device, comprising:

- an electronic circuit capable of storing data therein, capable of processing data, and capable of data input and output;
- a control device operatively linked to said electronic circuit, with an invariable activation command being issued when said control device is selectively triggered;
- a user interface device operatively linked to said electronic circuit;
- a data transceiver operatively linked to said electronic circuit, said data transceiver being for exchanging data between said electronic circuit and an external data exchange device, and for receiving a selectively emitted activation cue from a source external to said portable electronic device;
- a data conveyance switching element operatively linked to said electronic circuit, said switching element being in an activated state upon an activation cue having been received by said data transceiver, and being in an inactive state when no activation cue was received by said data transceiver;

and

- power means for providing power to said portable electronic device;

wherein upon said control device being selectively triggered to issue said invariable activation command:

- if said switching element is in said activated state, a data exchange will be initiated through the instrumentality of said data transceiver for exchanging data between said electronic circuit and an external data exchange device;
- if said switching element is in said inactive state, data will be conveyed from said electronic circuit to said user interface device for communicating information to the portable electronic device holder.

2. A portable electronic device as defined in claim 1, wherein said user interface device is a display screen.

3. A portable electronic device as defined in claim 1, wherein said data transceiver comprises a data transmitter, a data receiver distinct from said data transmitter, and a cue receiver distinct from said data receiver.

4. A portable electronic device as defined in claim 1, wherein said control device is a biometric parameter detector.

5. A portable electronic device as defined in claim 4, wherein said biometric parameter detector is a fingerprint scanner capable of obtaining a fingerprint scan, and whereby said control device is triggered when the fingerprint scan matches a fingerprint image pre-saved in said electronic circuit.

6. A portable electronic device as defined in claim 1, wherein said control device is a manually activated button, and whereby said control device is triggered when the button is pressed.

7. A portable electronic device as defined in claim 1, wherein said electronic circuit comprises said switching element.

8. A portable electronic device as defined in claim 7, wherein said electronic circuit comprises a microchip, and wherein said switching element is a series of instructions programmed onto said microchip.

9. A portable electronic device as defined in claim 1, wherein said switching element comprises a logical circuit.

10. A data exchange system comprising :

- a data exchange device comprising a first electronic circuit, a first data transceiver and a cue emitter; and
- a portable electronic device, comprising:
    - a second electronic circuit capable of storing data therein, capable of processing data, and capable of data input and output;
    - a control device operatively linked to said second electronic circuit, with an invariable activation command being issued when said control device is selectively triggered;
    - a user interface device operatively linked to said second electronic circuit;

- a second data transceiver operatively linked to said second electronic circuit;
- a data conveyance switching element operatively linked to said second electronic circuit, said switching element being in an activated state upon an activation cue having been received by said second data transceiver, and being in an inactive state when no activation cue was received by said second data transceiver;

and

- power means for providing power to said portable electronic device;

wherein upon said control device being selectively triggered to issue said invariable activation command:

- if said switching element is in its activated state, a data exchange will occur between said first data transceiver and said second data transceiver, thereby exchanging data between said data exchange device and said portable electronic device;
- if said switching element is in its inactive state, data is forwarded to said user interface device for communicating information to the portable electronic device holder.

11. A portable electronic device comprising:

- an electronic circuit capable of storing data therein, capable of processing data, and capable of data input and output;
- a control device operatively linked to said electronic circuit, with an invariable activation command being issued when said control device is selectively triggered;
- first and second data conveyance functions programmed in said electronic circuit;
- a cue receiver for receiving a selectively emitted activation cue from a source external to said portable electronic device; and
- power means, for providing power to said portable electronic device;

wherein upon said control device being selectively triggered to issue said invariable activation command, said electronic circuit will accomplish said first data conveyance function if an activation cue was received by said cue receiver and said second data conveyance function if no cue was received by said cue receiver.

12. A method for data exchange with a portable electronic device of the type comprising: an electronic circuit capable of storing data therein, capable of processing data, and capable of data input and output, a control device operatively linked to said circuit, a user interface device operatively linked to said circuit, communication ports operatively linked to said

circuit, a switching element operatively linked to said electronic circuit and being in a default inactive state, and power means for providing power to said portable electronic device, said method comprising the steps of:

- awaiting for an activation cue to be received at a predetermined one of said communication ports;
- if an activation cue is received at one of said communication ports, changing the state of said switching element from its default inactive state to an activated state; and
- selectively triggering said control device to issue an invariable activation command, whereby said method will further comprise one of the two following steps:
  - if said switching element is in its activated state, initiating a data exchange with an external data exchange device through at least one of said communication ports; and
  - if said switching element is in its inactive state, conveying data from said electronic circuit to said user interface device for communicating information to the portable electronic device holder.

13. A method as defined in claim 12,
wherein said activation cue is received at one of said communication ports distinct from another one of said communication ports used for data exchange with the external data exchange device.

14. A method as defined in claim 12,
wherein the additional following step occurs after selectively triggering said control device if said switching element is in said activated state:

- conveying data from said electronic circuit to said user interface device for communicating information to the portable electronic device holder.

13 OCT 20

PATENT COOPERATION TREATY

From the
INTERNATIONAL PRELIMINARY EXAMINING AUTHORITY

To:

NITHARDT, Roland
CABINET NITHARDT ET ASSOCIES S.A.
B.P. 1445
68071 Mulhouse Cedex
FRANCE

/EE

- 4 JUIL. 2005

PCT

REÇU / RECEIVED
11 JUIL. 2005
LESPÉRANCE & MARTINEAU

WRITTEN OPINION
(PCT Rule 66)

Date of mailing (day/month/year)	01.07.2005
REPLY DUE	**within 1 month(s)** from the above date of mailing

Applicant's or agent's file reference	International application No.	International filing date (day/month/year)	Priority date (day/month/year)
BR 18364/IN	PCT/IB 03/01523	14.04.2003	14.04.2003

International Patent Classification (IPC) or both national classification and IPC
G06K19/07

Applicant
G. HOLDINGS LTD.

1. This written opinion is the **first** drawn up by this International Preliminary Examining Authority.
2. This opinion contains indications relating to the following items:

I	☒	Basis of the opinion
II	☐	Priority
III	☐	Non-establishment of opinion with regard to novelty, inventive step and industrial applicability
IV	☐	Lack of unity of invention
V	☒	Reasoned statement under Rule 66.2(a)(ii) with regard to novelty, inventive step or industrial applicability; citations and explanations supporting such statement
VI	☐	Certain documents cited
VII	☐	Certain defects in the international application
VIII	☐	Certain observations on the international application

3. The applicant is hereby **invited to reply** to this opinion.

When? See the time limit indicated above. The applicant may, before the expiration of that time limit, request this Authority to grant an extension, see Rule 66.2(d).

How? By submitting a written reply, accompanied, where appropriate, by amendments, according to Rule 66.3. For the form and the language of the amendments, see Rules 66.8 and 66.9.

Also: For an additional opportunity to submit amendments, see Rule 66.4.
For the examiner's obligation to consider amendments and/or arguments, see Rule 66.4 bis.
For an informal communication with the examiner, see Rule 66.6.

If no reply is filed, the international preliminary examination report will be established on the basis of this opinion.

4. The final date by which the international preliminary examination report must be established according to Rule 69.2 is: 14.08.2005

Name and mailing address of the international preliminary examining authority:	Authorized Officer
European Patent Office D-80298 Munich Tel. +49 89 2399 - 0 Tx: 523656 epmu d Fax: +49 89 2399 - 4465	Schauler, M Formalities officer (incl. extension of time limits) Slater, S Telephone No. +49 89 2399-2565

Form PCT/IPEA/408 (Cover Sheet) (January 2004)

10/552912

JC20 Rec'd PCT/PTO 13 OCT 2005

WRITTEN OPINION International application No. PCT/IB 03/01523

I. Basis of the opinion

1. With regard to the **elements** of the international application *(Replacement sheets which have been furnished to the receiving Office in response to an invitation under Article 14 are referred to in this opinion as "originally filed")*:

Description, Pages

1-14 as originally filed

Claims, Numbers

1-15 as originally filed

Drawings, Sheets

1/3-3/3 as originally filed

2. With regard to the **language**, all the elements marked above were available or furnished to this Authority in the language in which the international application was filed, unless otherwise indicated under this item.

   These elements were available or furnished to this Authority in the following language: , which is:

   - ☐ the language of a translation furnished for the purposes of the international search (under Rule 23.1(b)).
   - ☐ the language of publication of the international application (under Rule 48.3(b)).
   - ☐ the language of a translation furnished for the purposes of international preliminary examination (under Rule 55.2 and/or 55.3).

3. With regard to any **nucleotide and/or amino acid sequence** disclosed in the international application, the international preliminary examination was carried out on the basis of the sequence listing:

   - ☐ contained in the international application in written form.
   - ☐ filed together with the international application in computer readable form.
   - ☐ furnished subsequently to this Authority in written form.
   - ☐ furnished subsequently to this Authority in computer readable form.
   - ☐ The statement that the subsequently furnished written sequence listing does not go beyond the disclosure in the international application as filed has been furnished.
   - ☐ The statement that the information recorded in computer readable form is identical to the written sequence listing has been furnished.

4. The amendments have resulted in the cancellation of:

   - ☐ the description, pages:
   - ☐ the claims, Nos.:
   - ☐ the drawings, sheets:

5. ☐ This opinion has been established as if (some of) the amendments had not been made, since they have been considered to go beyond the disclosure as filed (Rule 70.2(c)).

6. Additional observations, if necessary:

V. Reasoned statement under Rule 66.2(a)(ii) with regard to novelty, inventive step or industrial applicability; citations and explanations supporting such statement

1. Statement

Novelty (N)	Claims	1,2,8,11,12,13
Inventive step (IS)	Claims	
Industrial applicability (IA)	Claims	

2. Citations and explanations

see separate sheet

10/552912
JC20 Rec'd PCT/PTO 13 OCT 2005

Re Item V

Reasoned statement under Rule 66.2(a)(ii) with regard to novelty, inventive step or industrial applicability; citations and explanations supporting such statement

Reference is made to the following document:

D1: DE-101 46 804

1. The document D1 discloses a portable electronic device comprising an electronic circuit (3), a control device (17), a user interface device (display: 82), a data transceiver (fig 9, no 41), a data conveyance switching element (fig 3, no 26) and power means. When the portable electronic device is awakened (paragraphs 0056-0062, 0082), the switching element is activated (fig 3, no 25) and the data exchange can be initiated with the external device (terminal via controller 19 in fig 3) or with the user interface device (via controller 20 in fig 3).

   Hence, the subject-matter of claims 1, 2, and 8 is not novel (Article 33(2) PCT). A corresponding objection is raised against the other independent claims (claims 11, 12, and 13).

2. Further remarks:

- In claim 1, the data transceiver and the cue receiver are claimed as two entities. From the description, however, it appears as if both devices are identical (page 8, line 26: "The transceiver is also a cue receiver..."). This renders claim 1 unclear (Article 6 PCT).

- In claim 1 it is unclear whether there is a difference between the "triggering" (line 6) and the "selective triggering" (line 17) of the control device (Article 6 PCT).

- A "series of instructions" per se, as claimed in claim 9 cannot act as a switching element, therefore rendering said claim unclear (Article 6 PCT).

- The meaning of the term "decisional logic circuit" in claim 10 is unclear (Article 6 PCT).

- The claims should be drafted in two-part-form (Rule 6.3(b) PCT) and should be delimited in view of D1 which is considered to reflect the closest prior art..

- Claim 12 is broader than claim 1. To improve clarity and conciseness, claim 1 should be drafted as to depend on claim 12 (see also Rule 6.4 PCT).

- Contrary to the requirements of Rule 5.1(a)(ii) PCT, the relevant background art disclosed in the document D1 is not mentioned in the description, nor is this document identified therein.

- The features of the claims 1-15 are not provided with reference signs placed in parentheses (Rule 6.2(b) PCT).

PCT/PTO 13 OCT 2005
ARRIVÉE
- 2 SEP 2005

PATENT COOPERATION TREATY

From the
INTERNATIONAL PRELIMINARY EXAMINING AUTHORITY

To:

NITHARDT, Roland
CABINET NITHARDT ET ASSOCIES S.A.
B.P. 1445
68071 Mulhouse Cedex
FRANCE

REÇU / RECEIVED
13 SEP. 2005
L'ESPÉRANCE & MARTINEAU

PCT

NOTIFICATION OF TRANSMITTAL OF THE INTERNATIONAL PRELIMINARY EXAMINATION REPORT

(PCT Rule 71.1)

Date of mailing *(day/month/year)*	31.08.2005
Applicant's or agent's file reference BR 18364/N	**IMPORTANT NOTIFICATION**

International application No.	International filing date *(day/month/year)*	Priority date *(day/month/year)*
PCT/IB 03/01523	14.04.2003	14.04.2003

Applicant
G. HOLDINGS LTD.

1. The applicant is hereby notified that this International Preliminary Examining Authority transmits herewith the international preliminary examination report and its annexes, if any, established on the international application.

2. A copy of the report and its annexes, if any, is being transmitted to the International Bureau for communication to all the elected Offices.

3. Where required by any of the elected Offices, the International Bureau will prepare an English translation of the report (but not of any annexes) and will transmit such translation to those Offices.

4. **REMINDER**

The applicant must enter the national phase before each elected Office by performing certain acts (filing translations and paying national fees) within 30 months from the priority date (or later in some Offices) (Article 39(1)) (see also the reminder sent by the International Bureau with Form PCT/IB/301).

Where a translation of the international application must be furnished to an elected Office, that translation must contain a translation of any annexes to the international preliminary examination report. It is the applicant's responsibility to prepare and furnish such translation directly to each elected Office concerned.

For further details on the applicable time limits and requirements of the elected Offices, see Volume II of the PCT Applicant's Guide.

The applicant's attention is drawn to Article 33(5), which provides that the criteria of novelty, inventive step and industrial applicability described in Article 33(2) to (4) merely serve the purposes of international preliminary examination and that "any Contracting State may apply additional or different criteria for the purposes of deciding whether, in that State, the claimed inventions is patentable or not" (see also Article 27(5)). Such additional criteria may relate, for example, to exemptions from patentability, requirements for enabling disclosure, clarity and support for the claims.

Name and mailing address of the international preliminary examining authority:	Authorized Officer
European Patent Office D-80298 Munich Tel. +49 89 2399 - 0 Tx: 523656 epmu d Fax: +49 89 2399 - 4465	Sportellini, E Tel. +49 89 2399-7647

Form PCT/IPEA/416 (January 2004)

PATENT COOPERATION TREATY

PCT

INTERNATIONAL PRELIMINARY EXAMINATION REPORT

(PCT Article 36 and Rule 70)

Applicant's or agent's file reference BR 18364/N	**FOR FURTHER ACTION**	See Notification of Transmittal of International Preliminary Examination Report (Form PCT/IPEA/416)
International application No. PCT/B 03/01523	International filing date *(day/month/year)* 14.04.2003	Priority date *(day/month/year)* 14.04.2003
International Patent Classification (IPC) or both national classification and IPC G06K19/07		
Applicant G. HOLDINGS LTD.		

1. This international preliminary examination report has been prepared by this International Preliminary Examining Authority and is transmitted to the applicant according to Article 36.

2. This REPORT consists of a total of 5 sheets, including this cover sheet.

   ☒ This report is also accompanied by ANNEXES, i.e. sheets of the description, claims and/or drawings which have been amended and are the basis for this report and/or sheets containing rectifications made before this Authority (see Rule 70.16 and Section 607 of the Administrative Instructions under the PCT).

   These annexes consist of a total of 4 sheets.

3. This report contains indications relating to the following items:

   I ☒ Basis of the opinion
   II ☐ Priority
   III ☐ Non-establishment of opinion with regard to novelty, inventive step and industrial applicability
   IV ☐ Lack of unity of invention
   V ☒ Reasoned statement under Rule 66.2(a)(ii) with regard to novelty, inventive step or industrial applicability; citations and explanations supporting such statement
   VI ☐ Certain documents cited
   VII ☐ Certain defects in the international application
   VIII ☐ Certain observations on the international application

Date of submission of the demand	Date of completion of this report
08.11.2004	31.08.2005
Name and mailing address of the international preliminary examining authority: European Patent Office D-80298 Munich Tel. +49 89 2399 - 0 Tx: 523656 epmu d Fax: +49 89 2399 - 4465	Authorized Officer Schauler, M Telephone No. +49 89 2399-7394

Form PCT/IPEA/409 (Cover Sheet) (January 2004)

10/552912

JC20 Rec'd PCT/PTO 13 OCT 2005

INTERNATIONAL PRELIMINARY EXAMINATION REPORT

International application No. PCT/IB 03/01523

I. Basis of the report

1. With regard to the **elements** of the international application *(Replacement sheets which have been furnished to the receiving Office in response to an invitation under Article 14 are referred to in this report as "originally filed" and are not annexed to this report since they do not contain amendments (Rules 70.16 and 70.17))*:

Description, Pages

1-14 as originally filed

Claims, Numbers

1-14 received on 22.07.2005 with letter of 19.07.2005

Drawings, Sheets

1/3-3/3 as originally filed

2. With regard to the **language**, all the elements marked above were available or furnished to this Authority in the language in which the international application was filed, unless otherwise indicated under this item.

   These elements were available or furnished to this Authority in the following language: , which is:

   - ☐ the language of a translation furnished for the purposes of the international search (under Rule 23.1(b)).
   - ☐ the language of publication of the international application (under Rule 48.3(b)).
   - ☐ the language of a translation furnished for the purposes of international preliminary examination (under Rule 55.2 and/or 55.3).

3. With regard to any **nucleotide and/or amino acid sequence** disclosed in the international application, the international preliminary examination was carried out on the basis of the sequence listing:

   - ☐ contained in the international application in written form.
   - ☐ filed together with the international application in computer readable form.
   - ☐ furnished subsequently to this Authority in written form.
   - ☐ furnished subsequently to this Authority in computer readable form.
   - ☐ The statement that the subsequently furnished written sequence listing does not go beyond the disclosure in the international application as filed has been furnished.
   - ☐ The statement that the information recorded in computer readable form is identical to the written sequence listing has been furnished.

4. The amendments have resulted in the cancellation of:

   - ☐ the description, pages:
   - ☒ the claims, Nos.: 15
   - ☐ the drawings, sheets:

5. ☐ This report has been established as if (some of) the amendments had not been made, since they have been considered to go beyond the disclosure as filed (Rule 70.2(c)).

   (Any replacement sheet containing such amendments must be referred to under item 1 and annexed to this report.)

6. Additional observations, if necessary:

   see separate sheet

V. Reasoned statement under Article 35(2) with regard to novelty, inventive step or industrial applicability; citations and explanations supporting such statement

1. Statement

Novelty (N)	Yes:	Claims	3
	No:	Claims	1,2,4-14
Inventive step (IS)	Yes:	Claims	-
	No:	Claims	1-14
Industrial applicability (IA)	Yes:	Claims	1-14
	No:	Claims	-

2. Citations and explanations

   see separate sheet

JC20 Rec'd PCT/PTO 13 OCT 2005

Re Item V

Reasoned statement with regard to novelty, inventive step or industrial applicability; citations and explanations supporting such statement

Reference is made to the following document:

D1: DE 101 46 804 A (PHILIPS CORP INTELLECTUAL PTY) 10 April 2003 (2003-04-10)

The present application does not meet the criteria of Article 33(1) PCT, because the subject-matter of claims 1 and 10-14 is not new in the sense of Article 33(2) PCT.

The document D1 discloses a portable electronic device comprising: (the references in parentheses applying to this document):
- an electronic circuit (1) capable of storing data, capable of processing data and capable of data input (from data transceiver 3) and output (to display device 2).
- a control device (9) linked to said electronic circuit (1)
- a user interface (display 2) linked to said electronic circuit (1)
- a data transceiver (3) linked to said electronic circuit (1), said data transceiver being for exchange data between the electronic circuit (1) and an external device via interface (4) and for receiving an activation cue (signal voltage 25, cf paragraph [0058])
- a switching element (26) operatively linked to said electronic circuit, said switching element being in an activated state upon an activation cue (signal voltage 25) having been received by said data transceiver, and being inactive otherwise.
- power means for providing power (cf paragraph [0057])
- if said switching element is activated, data exchange will be initiated through said transceiver for exchanging data (cf Fig 2)
- if said switching element is in inactive state, data will be conveyed to the user interface (cf Fig 3)

Hence, the subject-matter of claims 1 and 10-14 is not new.

The document D1 further discloses:
- the use of a display as user interface device

- the use of biometric parameters for activation of the device ([0045])
- the control device being a button ([0053])
- the switching element comprising a logical circuit ("switching logic" [0058])

Hence, the subject-matter of claims 2 and 4-9 is not new .

The feature that the data receiver is distinct from the data transmitter and the cue receiver is distinct from the data receiver is not disclosed in D1, but this is only a small constructional change which the skilled person would regard it a normal design option for a data transceiver device.

Therefore, the subject-matter of claim 3 does not involve an inventive step in the sense of Article 33(3) PCT.

Additional remarks

- The claims are not drafted in two-part-form (Rule 6.3(b) PCT)

- Contrary to the requirements of Rule 5.1(a)(ii) PCT, the relevant background art disclosed in the document D1 is not mentioned in the description, nor is this document identified therein.

- The features of the claims 1-14 are not provided with reference signs placed in parentheses (Rule 6.2(b) PCT).

Cabinet Nithardt & Associés S.A.
Conseils en Propriété Industrielle
Mandataires agréés près l'Office Européen des Brevets

10/552912

JC20 Rec'd PCT/PTO 13 OCT 2005

Brevets d'invention
Marques et Modèles

Membre de l'Association Internationale pour la Protection de la Propriété Industrielle (AIPPI)

BY REGISTERED MAIL
EUROPEAN PATENT OFFICE
Erhardtstrasse 27
D - 80298 MÜNCHEN

O/Ref. : BR 18364/IN

Mulhouse, 19th July 2005

International patent application **PCT/IB03/01523** filed on **14th April 2003**
In the name of : **G. HOLDINGS LTD**

COPIE

Dear Sirs :

This is pursuant to the written opinion dated July 1, 2005.

Please find enclosed a set of amended claims 1–14 on amended pages 15–18, to replace claims 1–15 of pages 15–19 on file. Please also find enclosed an annotated version of the claims where all amendments are apparent, for the Examiner's perusal.

In claim 1, the Examiner objects to the fact that the data transceiver and cue receiver are claimed as two separate entities. To overcome this objection, the cue receiver has been eliminated from amended claim 1, and the data transceiver is now said to assume the cue receiver's functions, i.e. receiving a selectively emitted activation cue from a source external to said portable electronic device.

Similarly, in amended independent claim 10 (former claim 11), the cue is now said to be received by the second data transceiver rather than by a cue receiver.

14, bd Alfred WALLACH - B.P. 1445 - F-68071 Mulhouse Cedex (France)
Tél. +(33) 03 89 31 84 40 - Fax +(33) 03 89 44 36 31 - e-mail : nithardtfr@aol.com - site : www.nithardt.fr
S.A. au capital de 76225 € - RC Mulhouse B 350 873 980
SIRET 350 873 980 00030 - NAF 741 G

Bureaux associés
France : Paris
Suisse : Yverdon
Genève

10/552912
JC20 Rec'd PCT/PTO 13 OCT 2005

In amended claim 3, which depends upon claim 1, the data transceiver is now said to comprise a data transmitter, a data receiver distinct from said data transmitter, and a cue receiver distinct from said data receiver. This is consistent with the above-mentioned amendment brought to claim 1.

Former claim 4 has been deleted, and the subsequent claims have been consequently renumbered.

The Examiner believes it is unclear whether there is a difference, in claim 1, between the "triggering" and the "selective triggering" of the control device. In amended claims 1, 10 and 11, the control device is now consistently said to be selectively triggered.

The applicant respectfully disagrees with the fact that "series of instructions" cannot act as the switching element in former claim 9 (claim 8 of the enclosed set of claims). The Tormont Webster's Illustrated Encyclopaedic Dictionary (1990) defines "element" as follows: *"A fundamental, essential, or irreducible constituent of a composite entity."* The applicant believes that *"a series of instructions programmed onto a microchip"* emulating the functions of a switching element, are indeed a constituent of the composite entity formed by the claimed portable electronic device, and can rightfully be considered to be a switching element. This is supported by the description, where it is said that *"switching element 44b can be a physical structure, a virtual program, or both."* (page 9, line 7). Applicant thus believes that the meaning of amended claim 8 is clear in light of the description, contrarily to the Examiner's contention.

The expression "decisional logical circuit" in amended claim 9 (former claim 10) has been replaced by "logical circuit". Since it is common knowledge in the art that a "logical circuit" means an electronic circuit comprising a number of logic gates and performing logical operations on data, having one or more binary inputs and a single binary output, it is believed that the expression "logical circuit" should be clear in this context.

This concludes the amendments brought to the claims.

Furthermore, the applicant respectfully disagrees with the Examiner which is of the opinion that the present invention as claimed in amended claims 1, 2, 7 and 10–12 cannot be considered novel or be considered to involve an inventive step in view of the German patent application DE 101 46 804 (document D1).

Document D1 discloses in figures 2–3 a switching logic 26 which is controlled by a control signal 25 responsive to a terminal supply voltage 22 which originates from a chip card outboard of the chip card itself. Switching logic 26 will establish alternate data communication paths depending on whether a terminal supply voltage 22 activates control signal 25 or not. If a terminal supply voltage activates control signal 25, switching logic 26 will be set in a write mode (figure 2) establishing data communication between a non-volatile memory 16 and a write mode control circuit 19. In this write mode of switching logic 26, data is exchanged between the chip card memory 16 and the outboard chip card terminal. If no terminal supply voltage 22 activates control signal 25, switching logic 26 will remain in a default read mode (figure 3) establishing data communication between memory 16 and a read mode control circuit 20. In this read mode of switching logic 26, data from memory 16 is displayed on the chip card display screen 2 (figure 1) through read mode control circuit 10 and a driver circuit 21 controlling data display on screen 2.

Consequently, data can flow in/out of the memory 16 and from/towards the write mode control circuit 19, or out of the memory 16 towards the read mode control circuit 20 depending on whether or not a chip card terminal supply voltage 22 is supplied to the chip card. The cardholder does not need to intervene for this alternate data conveyance to occur.

In the present invention as claimed, the claimed control device plays an important role in the functioning of the portable electronic device. Indeed, it issues an invariable activation command without which no data can flow in or out of the electronic circuit. After the invariable activation command is issued, a data exchange can occur between the electronic circuit and either the data exchange device to exchange data with an outboard terminal, or the user interface device e.g. to display data on the card display screen, depending on the state of the data conveyance

switching element which is responsive to the detected presence or absence of an outboard cue. Accordingly, the user must necessarily interact with the card in order for data to flow in or out of the electronic circuit; the outboard cue is not sufficient in itself, contrarily to what is taught in document D1. Also, the user interaction with the claimed device will be the same notwithstanding the desired result, i.e. a same control device will be activated to allow either one of the data conveyance paths to be established. Thus, a single control device, e.g. a single button, selectively and positively controls all actions accomplished by the smart card of the present invention in combination with the detected presence or absence of an outboard cue. This is not the case with the invention disclosed in document D1.

One amongst other advantages of the present invention can be illustrated through the following practical example. If the electronic device of the present invention is a contact-less debit card storing electronic money, payment can be sent through a contact-less debit card terminal to the money-receiving party (such as a subway station terminal for example) only if the cardholder triggers the control device. Instead of the card being debited automatically when the card is at a given distance from the contact-less terminal, it falls to the cardholder to trigger the payment by activating the control device. Consequently, unintentional debits from the card occurring when its holder steps too close to the contact-less debit card terminal are avoided.

The invention disclosed in document D1 does not benefit from this important advantage. Indeed, in the case where the chip card of document D1 is a contact-less debit card, if the cardholder was to step too close to the contact-less debit card terminal, the terminal supply voltage 22 could be applied and the switching element 26 hence switched to write mode, and unintentional debit from the card could then occur without the cardholder's consent since no user intervention occurs with the D1 device.

It is to be noted that a momentary activation contact switch 24 is provided on the chip card of document D1. Activation switch 24 can be activated merely for waking the card from its sleep mode, i.e. resume presentation of information on display 2 if switching element 26 is in its read mode state. Thus, the contact switch 24 of the card of document D1 has the effect of only

activating the read mode portion of the card, and has a quite different function than the control device claimed in the present patent application, which must necessarily be triggered to initiate any data flow towards or out of the electronic circuit. Thus, activation switch 24 of document D1 does not interact in combination with the detected presence or absence of an outboard cue as with the present invention.

The present applicant thus believes that his invention as claimed is patentable over the teachings of document D1, i.e. German patent application no. DE 101 46 804. Indeed, all independent claims of the present invention clearly define a portable electronic device or a method of data exchange with such a device, that comprises not only a data transceiver capable of receiving an outboard cue, but also a control device that issues an invariable activation command and that cooperates with the detected presence or absence of an outboard cue to control the switching element. This, as detailed hereinabove, differs significantly from document D1 through the inclusion of positively defined claimed elements.

Please note that we have not yet amended the present application in view of the last four objections formulated by the Examiner in the "Further remarks" section of his written opinion, namely: (1) claims should be drafted in two-part form, (2) claim 1 should depend upon claim 12; (3) D1 should be disclosed in the background section, and (4) reference signs should appear in parentheses in the claims. This is because these objections incite the applicant to bring the claims in line with European practice requirements, which are different than other national requirement such as Canadian and US practice requirements. We believe it would be more appropriate to make the amendments to take these objections into consideration during the entry into the European regional stage of the present PCT application, rather than during the international stage.

Please take our comments and amended claims into consideration to render an International Preliminary Examination Report which confirms the novelty and inventive step of the present invention.

Cabinet Nithardt & Associés S.A.

Yours faithfully,

Roland NITHARDT

Encl. : Amended claims 1-14 (3x)
Annotated version of claims (3x)
Acknowledgement of receipt to EPO

10/552912

JC20 Rec'd PCT/PTO 13 OCT 2005

CLAIMS

1. A portable electronic device, comprising:

- an electronic circuit capable of storing data therein, capable of processing data, and capable of data input and output;
- a control device operatively linked to said electronic circuit, with an invariable activation command being issued when said control device is selectively triggered;
- a user interface device operatively linked to said electronic circuit;
- a data transceiver operatively linked to said electronic circuit~~;~~, said data transceiver being for exchanging data between said electronic circuit and an external data exchange device, and for
- ~~a cue receiver for~~ receiving a selectively emitted activation cue from a source external to said portable electronic device;
- a data conveyance switching element operatively linked to said electronic circuit, said switching element being in an activated state upon an activation cue having been received by said ~~cue receiver~~ data transceiver, and being in an inactive state when no activation cue was received by said ~~cue receiver~~ data transceiver;

and

- power means for providing power to said portable electronic device;

wherein upon said control device being selectively triggered to issue said invariable activation command:

- if said switching element is in said activated state, a data exchange will be initiated through the instrumentality of said data transceiver for exchanging data between said electronic circuit and an external data exchange device;
- if said switching element is in said inactive state, data will be conveyed from said electronic circuit to said user interface device for communicating information to the portable electronic device holder.

2. A portable electronic device as defined in claim 1,

wherein said user interface device is a display screen.

3. A portable electronic device as defined in claim 1,

wherein said data transceiver comprises a data transmitter, ~~and~~ a data receiver distinct from said data transmitter, and a cue receiver distinct from said data receiver.

~~4.A portable electronic device as defined in claim 3,~~
~~wherein said cue receiver is said data receiver.~~

~~5.~~4.A portable electronic device as defined in claim 1,
wherein said control device is a biometric parameter detector.

~~6.~~5.A portable electronic device as defined in claim ~~5~~4,
wherein said biometric parameter detector is a fingerprint scanner capable of obtaining a fingerprint scan, and whereby said control device is triggered when the fingerprint scan matches a fingerprint image pre-saved in said electronic circuit.

~~7.~~6.A portable electronic device as defined in claim 1,
wherein said control device is a manually activated button, and whereby said control device is triggered when the button is pressed.

~~8.~~7.A portable electronic device as defined in claim 1,
wherein said electronic circuit comprises said switching element.

~~9.~~8.A portable electronic device as defined in claim ~~8~~7,
wherein said electronic circuit comprises a microchip, and wherein said switching element is a series of instructions programmed onto said microchip.

~~10.~~9. A portable electronic device as defined in claim 1,
wherein said switching element comprises a ~~decisional~~ logical circuit.

~~11.~~10. A data exchange system comprising :

- a data exchange device comprising a first electronic circuit, a first data transceiver and a cue emitter; and
- a portable electronic device, comprising:

- a second electronic circuit capable of storing data therein, capable of processing data, and capable of data input and output;
- a control device operatively linked to said second electronic circuit, with an invariable activation command being issued when said control device is selectively triggered;
- a user interface device operatively linked to said second electronic circuit;
- a second data transceiver operatively linked to said second electronic circuit;
- a data conveyance switching element operatively linked to said second electronic circuit, said switching element being in an activated state upon an activation cue having been received by said ~~cue receiver~~ second data transceiver, and being in an inactive state when no activation cue was received by said ~~cue receiver~~ second data transceiver;

and

- power means for providing power to said portable electronic device;

wherein upon said control device being selectively triggered to issue said invariable activation command:

- if said switching element is in its activated state, a data exchange will occur between said first data transceiver and said second data transceiver, thereby exchanging data between said data exchange device and said portable electronic device;
- if said switching element is in its inactive state, data is forwarded to said user interface device for communicating information to the portable electronic device holder.

~~12.~~11. A portable electronic device comprising:

- an electronic circuit capable of storing data therein, capable of processing data, and capable of data input and output;
- a control device operatively linked to said electronic circuit, with an invariable activation command being issued when said control device is selectively triggered;
- first and second data conveyance functions programmed in said electronic circuit;
- a cue receiver for receiving a selectively emitted activation cue from a source external to said portable electronic device; and
- power means, for providing power to said portable electronic device;

wherein upon said control device being selectively triggered to issue said invariable activation command, said electronic circuit will accomplish said first data conveyance function if an

activation cue was received by said cue receiver and said second data conveyance function if no cue was received by said cue receiver.

~~13.~~12. A method for data exchange with a portable electronic device of the type comprising: an electronic circuit capable of storing data therein, capable of processing data, and capable of data input and output, a control device operatively linked to said circuit, a user interface device operatively linked to said circuit, communication ports operatively linked to said circuit, a switching element operatively linked to said electronic circuit and being in a default inactive state, and power means for providing power to said portable electronic device, said method comprising the steps of :

- awaiting for an activation cue to be received at a predetermined one of said communication ports;
- if an activation cue is received at one of said communication ports, changing the state of said switching element from its default inactive state to an activated state; and
- selectively triggering said control device to issue an invariable activation command, whereby said method will further comprise one of the two following steps:
    - if said switching element is in its activated state, initiating a data exchange with an external data exchange device through at least one of said communication ports; and
    - if said switching element is in its inactive state, conveying data from said electronic circuit to said user interface device for communicating information to the portable electronic device holder.

~~14.~~13. A method as defined in claim ~~13~~ 12,
wherein said activation cue is received at one of said communication ports distinct from another one of said communication ports used for data exchange with the external data exchange device.

~~15.~~14. A method as defined in claim ~~13~~ 12,
wherein the additional following step occurs after selectively triggering said control device if said switching element is in said activated state:

- conveying data from said electronic circuit to said user interface device for communicating information to the portable electronic device holder.

CLAIMS

1. A portable electronic device, comprising:

- an electronic circuit capable of storing data therein, capable of processing data, and capable of data input and output;
- a control device operatively linked to said electronic circuit, with an invariable activation command being issued when said control device is selectively triggered;
- a user interface device operatively linked to said electronic circuit;
- a data transceiver operatively linked to said electronic circuit, said data transceiver being for exchanging data between said electronic circuit and an external data exchange device, and for receiving a selectively emitted activation cue from a source external to said portable electronic device;
- a data conveyance switching element operatively linked to said electronic circuit, said switching element being in an activated state upon an activation cue having been received by said data transceiver, and being in an inactive state when no activation cue was received by said data transceiver;

and

- power means for providing power to said portable electronic device;

wherein upon said control device being selectively triggered to issue said invariable activation command:

- if said switching element is in said activated state, a data exchange will be initiated through the instrumentality of said data transceiver for exchanging data between said electronic circuit and an external data exchange device;
- if said switching element is in said inactive state, data will be conveyed from said electronic circuit to said user interface device for communicating information to the portable electronic device holder.

2. A portable electronic device as defined in claim 1,

wherein said user interface device is a display screen.

3. A portable electronic device as defined in claim 1,

wherein said data transceiver comprises a data transmitter, a data receiver distinct from said data transmitter, and a cue receiver distinct from said data receiver.

4. A portable electronic device as defined in claim 1,
wherein said control device is a biometric parameter detector.

5. A portable electronic device as defined in claim 4,
wherein said biometric parameter detector is a fingerprint scanner capable of obtaining a fingerprint scan, and whereby said control device is triggered when the fingerprint scan matches a fingerprint image pre-saved in said electronic circuit.

6. A portable electronic device as defined in claim 1,
wherein said control device is a manually activated button, and whereby said control device is triggered when the button is pressed.

7. A portable electronic device as defined in claim 1,
wherein said electronic circuit comprises said switching element.

8. A portable electronic device as defined in claim 7,
wherein said electronic circuit comprises a microchip, and wherein said switching element is a series of instructions programmed onto said microchip.

9. A portable electronic device as defined in claim 1,
wherein said switching element comprises a logical circuit.

10. A data exchange system comprising :

- a data exchange device comprising a first electronic circuit, a first data transceiver and a cue emitter; and
- a portable electronic device, comprising:
    - a second electronic circuit capable of storing data therein, capable of processing data, and capable of data input and output;
    - a control device operatively linked to said second electronic circuit, with an invariable activation command being issued when said control device is selectively triggered;
    - a user interface device operatively linked to said second electronic circuit;

- a second data transceiver operatively linked to said second electronic circuit;
- a data conveyance switching element operatively linked to said second electronic circuit, said switching element being in an activated state upon an activation cue having been received by said second data transceiver, and being in an inactive state when no activation cue was received by said second data transceiver;

and

- power means for providing power to said portable electronic device;

wherein upon said control device being selectively triggered to issue said invariable activation command:

- if said switching element is in its activated state, a data exchange will occur between said first data transceiver and said second data transceiver, thereby exchanging data between said data exchange device and said portable electronic device;
- if said switching element is in its inactive state, data is forwarded to said user interface device for communicating information to the portable electronic device holder.

11. A portable electronic device comprising:

- an electronic circuit capable of storing data therein, capable of processing data, and capable of data input and output;
- a control device operatively linked to said electronic circuit, with an invariable activation command being issued when said control device is selectively triggered;
- first and second data conveyance functions programmed in said electronic circuit;
- a cue receiver for receiving a selectively emitted activation cue from a source external to said portable electronic device; and
- power means, for providing power to said portable electronic device;

wherein upon said control device being selectively triggered to issue said invariable activation command, said electronic circuit will accomplish said first data conveyance function if an activation cue was received by said cue receiver and said second data conveyance function if no cue was received by said cue receiver.

12. A method for data exchange with a portable electronic device of the type comprising: an electronic circuit capable of storing data therein, capable of processing data, and capable of data input and output, a control device operatively linked to said circuit, a user interface device operatively linked to said circuit, communication ports operatively linked to said

circuit, a switching element operatively linked to said electronic circuit and being in a default inactive state, and power means for providing power to said portable electronic device, said method comprising the steps of :

- awaiting for an activation cue to be received at a predetermined one of said communication ports;
- if an activation cue is received at one of said communication ports, changing the state of said switching element from its default inactive state to an activated state; and
- selectively triggering said control device to issue an invariable activation command, whereby said method will further comprise one of the two following steps:
    - if said switching element is in its activated state, initiating a data exchange with an external data exchange device through at least one of said communication ports; and
    - if said switching element is in its inactive state, conveying data from said electronic circuit to said user interface device for communicating information to the portable electronic device holder.

13. A method as defined in claim 12,
wherein said activation cue is received at one of said communication ports distinct from another one of said communication ports used for data exchange with the external data exchange device.

14. A method as defined in claim 12,
wherein the additional following step occurs after selectively triggering said control device if said switching element is in said activated state:

- conveying data from said electronic circuit to said user interface device for communicating information to the portable electronic device holder.

FILED UNDER 35 U.S.C. 371

Best Available Copy

U.S. **UTILITY** Patent Application

10/552912

PATENT NUMBER and ISSUE DATE

APPLICATION NUMBER	FILING DATE	CLASS	SUBCLASS	GROUP ART UNIT	EXAMINER
		349		2871	

(FACE)

NOTICE OF ALLOWANCE MAILED			CLAIMS ALLOWED	
		Assistant Examiner	Total Claims	Print Claim for O.G
ISSUE FEE			DRAWING	
Amount Due	Date Paid		Sheets Drwg.	Figs.Drwg. / Print Fig.
		Primary Examiner		
☐ TERMINAL DISCLAIMER		PREPARED FOR ISSUE	Application Examiner	

WARNING: The information disclosed herein may be restricted. Unauthorized disclosure may be prohibited by the United States Code Title 35, Sections 122, 181 and 368, Possession outside the U.S. Patent & Trademark Office is restricted to authorized employees and contractors only.

FILED WITH: ☐ DISK (CRF) ☐ CD-ROM
(Attached in pocket on right inside flap)

UNITED STATES NATIONAL STAGE SHEET (DO/EO)
Karen Williams, Paralegal

PUBLICATION NO. WO 04/090805

PUBLICATION DATE 21 OCT 04

U. S. APPL. NO. 10/552912

INTERNATIONAL APPL. PCT/IB03/01523

Application Filed By: 30 MOS

International Application ✓ Translation ___ Defective ___ Reason ___

WIPO Designated EP Elected EP IA Language ENGLISH

Copy of Search Report (ISR) ✓ Article 33 ___ Article 19 ___

371 Filing fees ✓ paid ___ insufficient

Total Claims 14 Chargeable 14 Independent 4 Multiple N

Total Drawing Sheets 3 Defective ___ Reason ___

Oath/Declaration needed ✓ signed ___ defective ___ Reason ___

Small entity ✓ Large entity ___ Small entity statement ___

Biochemical Seq. Diskette ___ needed ___ damaged ___ entered ___ not entered ___

Biochemical Sequence listing ___ needed ___ statement ___ no statement ___

Copy of References Cited in ISR ✓ IB/331 ___

Copy of IPER ✓ Annexes ✓ entered ✓ not entered ___ Reason ___

Preliminary Amendments ___ entered ✓ not entered Reason ___

Information Disclosure Statement ✓ Request for Immediate Examination ___

Substitute Specification ___ Assignment ___ Priority document ___

Power of Attorney ___ Data Sheet ✓ RO/101 ___ PCT Easy ___

Other papers WRITTEN OPINION

35 USC Receipt of Request 13 OCT 05
Date completion USC 371 Requirements ___
Notice of Missing Requirements 18 JAN 06
Notice of Defective ___ Response ___ Translation ___ Declaration ___ Disk ___
Notice of Acceptance ___
Notice of Abandonment ___
Notice of Missing Sequence ___