Trials@uspto.gov
571-272-7822

Paper 11
Date: February 28, 2022

UNITED STATES PATENT AND TRADEMARK OFFICE

BEFORE THE PATENT TRIAL AND APPEAL BOARD

SAMSUNG ELECTRONICS AMERICA, INC.,
Petitioner,

v.

PROXENSE, LLC,
Patent Owner.

IPR2021-01444
Patent 8,352,730 B2

Before KEVIN F. TURNER, JUSTIN T. ARBES, and DAVID C. McKONE, *Administrative Patent Judges.*

ARBES, *Administrative Patent Judge*.

DECISION
Denying Institution of *Inter Partes* Review
35 U.S.C. § 314

I. INTRODUCTION

A. Background and Summary

Petitioner Samsung Electronics America, Inc. filed a Petition (Paper 2, "Pet.") requesting *inter partes* review of claims 1–11 of U.S. Patent No. 8,352,730 B2 (Ex. 1001, "the '730 patent") pursuant to 35 U.S.C. § 311(a). Patent Owner Proxense, LLC filed a Preliminary Response (Paper 9, "Prelim. Resp.") pursuant to 35 U.S.C. § 313.

Pursuant to 35 U.S.C. § 314(a), the Director may not authorize an *inter partes* review unless the information in the petition and preliminary response "shows that there is a reasonable likelihood that the petitioner would prevail with respect to at least 1 of the claims challenged in the petition." *See* 37 C.F.R. § 42.4(a) ("The Board institutes the trial on behalf of the Director."). For the reasons that follow, we do not institute an *inter partes* review.

B. Related Matters

The parties indicate that the '730 patent is the subject of *Proxense, LLC v. Samsung Electronics Co., Ltd.*, Case No. 6:21-cv-00210 (W.D. Tex.) ("the district court case"). *See* Pet. 3; Paper 5, 1. Petitioner also filed petitions challenging claims of other patents asserted in the district court case in Cases IPR2021-01438, IPR2021-01439, IPR2021-01447, and IPR2021-01448.

C. The '730 Patent

The '730 patent discloses systems for "authentication responsive to biometric verification of a user being authenticated," using "a biometric key [that] persistently (or permanently) stores a code such as a device identifier (ID) and biometric data for a user in a tamper-resistant format." Ex. 1001, col. 1, ll. 57–62. The '730 patent states that "[c]onventional user authentication techniques," such as requiring input of a password, were deficient because they "require[d] the user to memorize or otherwise keep track of the credentials" and "it can be quite difficult to keep track of them all." *Id.* at col. 1, ll. 23–32. Other techniques, such as "provid[ing] the user with an access object . . . that the user can present to obtain access," were

inadequate because "authentication merely proves that the access object itself is valid; it does not verify that the legitimate user is using the access object." *Id.* at col. 1, ll. 33–43. According to the '730 patent, there was a need in the art for a system for "verifying a user that is being authenticated that does not suffer from [such] limitations" and "ease[s] authentications by wirelessly providing an identification of the user." *Id.* at col. 1, ll. 49–53.

Figure 2 of the '730 patent is reproduced below.

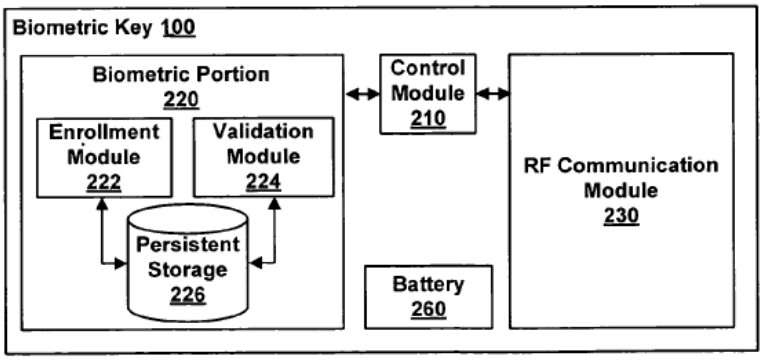

FIG. 2

Figure 2 is a block diagram of the functional modules of a biometric key. *Id.* at col. 2, ll. 41–43. Enrollment module 222 registers a user with biometric key 100 by persistently storing biometric data associated with the user (e.g., a digital image of the retina, fingerprint, or voice sample) in persistent storage 226. *Id.* at col. 4, ll. 4–28. Enrollment module 222 registers biometric key 100 with a trusted authority by providing a code, such as a device ID, to the trusted authority or, alternatively, the trusted authority can provide a code to biometric key 100. *Id.* at col. 4, ll. 8–12. The code is stored in persistent storage 226. *Id.* at col. 4, ll. 43–45. "Persistent storage 226 is itself, and stores data in, a tamper-proof format to prevent any changes to the stored data." *Id.* at col. 4, ll. 36–38. "Tamper-proofing increases reliability of authentication because it does not allow any changes to biometric data (i.e., allows reads of stored data, but not

writes to store new data or modify existing data)." *Id.* at col. 4, ll. 38–41. In a fingerprint embodiment, validation module 224 uses scan pad 120 (shown in Figure 1) to capture scan data from the user's fingerprint and compares the scanned data to the stored fingerprint to determine whether the scanned data matches the stored data. *Id.* at col. 4, ll. 14–23.

The interaction of biometric key 100 with other system components is illustrated in Figure 3, reproduced below.

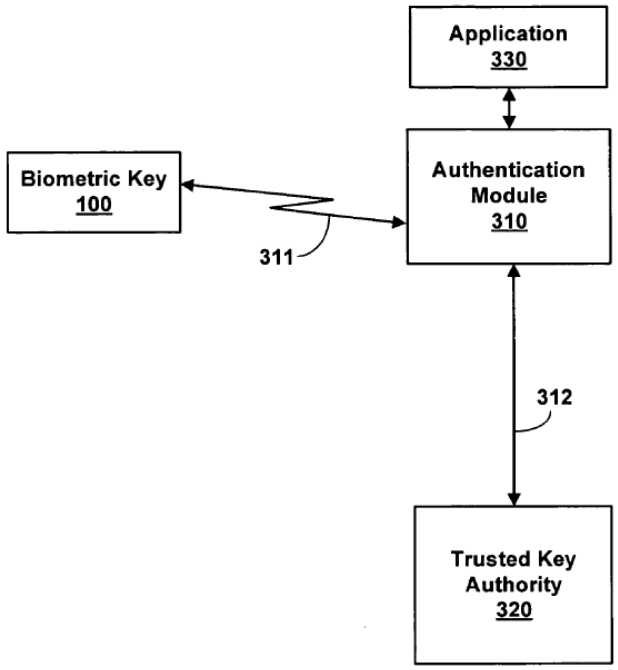

FIG. 3

Figure 3 is "a block diagram illustrating a system for providing authentication information for a biometrically verified user." *Id.* at col. 2, ll. 44–46. Authentication module 310 is coupled to biometric key 100 via line 311 (a wireless medium) and with trusted key authority 320 via line 312 (a secure data network such as the Internet). *Id.* at col. 5, ll. 8–12. Authentication module 310 requires the device ID code (indicating successful biometric verification) from biometric key 100 before allowing

the user to access application 330. *Id.* at col. 5, ll. 12–19. Authentication module 310 provides the device ID code from biometric key 100 to trusted key authority 320 to verify that it belongs to a legitimate key. *Id.* at col. 5, ll. 19–23; *see also id.* at col. 5, ll. 42–48 ("In one embodiment, trusted key authority 320 verifies that a code from a biometric key is legitimate. To do so, the trusted key authority 320 stores a list of codes for legitimate biometric keys. . . . In one embodiment, trusted key authority 320 can also store a profile associated with a biometric key."). Authentication module 310 then sends a message to application 330 to allow the user access to the application responsive to a successful authentication by trusted key authority 320. *Id.* at col. 5, ll. 23–26.

"Application 330 can be, for example, a casino machine, a keyless lock, a garage door opener, an ATM machine, a hard drive, computer software, a web site, a file, and the like." *Id.* at col. 5, ll. 28–31. Trusted key authority 320 can be operated by an agent, such as "a government official, a notary, and/or an employee of a third party which operates the trusted key authority, or another form of witness." *Id.* at col. 6, ll. 35–38. "The agent can follow standardized procedures such as requiring identification based on a state issued driver license, or a federally issued passport in order to establish a true identity of the user." *Id.* at col. 6, ll. 38–41.

D. Illustrative Claim

Challenged claims 1 and 8 of the '730 patent are independent. Claims 2–7 depend directly from claim 1 and claims 9–11 depend directly or indirectly from claim 8.

Claim 1 recites (with letter designations used in the Petition to refer to the various limitations):

> 1. A method for verifying a user during authentication of an integrated device, comprising the steps of:
>
> [A] persistently storing biometric data of the user and a plurality of codes and other data values comprising a device ID code uniquely identifying the integrated device and a secret decryption value in a tamper proof format written to a storage element on the integrated device that is unable to be subsequently altered; [B] wherein the biometric data is selected from a group consisting of a palm print, a retinal scan, an iris scan, a hand geometry, a facial recognition, a signature recognition and a voice recognition;
>
> [C] responsive to receiving a request for a biometric verification of the user, receiving scan data from a biometric scan;
>
> [D] comparing the scan data to the biometric data to determine whether the scan data matches the biometric data;
>
> [E] responsive to a determination that the scan data matches the biometric data, wirelessly sending one or more codes from the plurality of codes and the other data values for authentication by an agent that is a third-party trusted authority possessing a list of device ID codes uniquely identifying legitimate integrated devices, [F] wherein the one or more codes and other data values includes the device ID code; and
>
> [G] responsive to authentication of the one or more codes and the other data values by the agent, receiving an access message from the agent allowing the user access to an application, [H] wherein the application is selected from a group consisting of a casino machine, a keyless lock, a garage door opener, an ATM machine, a hard drive, computer software, a web site and a file.

E. Evidence

Petitioner relies on the following prior art:

U.S. Patent No. 7,239,226 B2, filed July 9, 2002, issued July 3, 2007 (Ex. 1010, "Berardi");

U.S. Patent No. 6,175,921 B1, issued Jan. 16, 2001 (Ex. 1011, "Rosen");

U.S. Patent Application Publication No. 2004/0153649 A1, published Aug. 5, 2004 (Ex. 1009, "Rhoads");

U.S. Patent Application Publication No. 2004/0044627 A1, published Mar. 4, 2004 (Ex. 1006, "Russell");

U.S. Patent Application Publication No. 2003/0177102 A1, published Sept. 18, 2003 (Ex. 1008, "Robinson");

U.S. Patent Application Publication No. 2003/0055792 A1, published Mar. 20, 2003 (Ex. 1013, "Kinoshita");

U.S. Patent Application Publication No. 2002/0109580 A1, published Aug. 15, 2002 (Ex. 1012, "Shreve");

U.S. Patent Application Publication No. 2001/0000535 A1, published Apr. 26, 2001 (Ex. 1007, "Lapsley"); and

International Patent Application Publication No. WO 99/56429, published Nov. 4, 1999 (Ex. 1005, "Scott").[1]

[1] When referencing portions of Scott, we refer to the original publication's page numbers in the top-center of each page (not the page numbers added by Petitioner in the lower-right corner of each page), consistent with the parties' usage in their papers.

F. Prior Art and Asserted Grounds

Petitioner asserts that claims 1–11 of the '730 patent are unpatentable on the following grounds:

Claim(s) Challenged	35 U.S.C. §	References/Basis
1, 2, 4–9, 11	103(a)[2]	Scott, Russell, Lapsley
3, 10	103(a)	Scott, Russell, Lapsley, Robinson
6	103(a)	Scott, Russell, Lapsley, Rhoads
1, 2, 4–6, 8, 9, 11	103(a)	Berardi, Rosen, Shreve, Kinoshita

II. ANALYSIS

A. Discretionary Denial Under 35 U.S.C. § 314(a)

Institution of *inter partes* review is discretionary. *See Harmonic Inc. v. Avid Tech., Inc.*, 815 F.3d 1356, 1367 (Fed. Cir. 2016) ("[T]he PTO is permitted, but never compelled, to institute an [*inter partes* review (IPR)] proceeding."); 35 U.S.C. § 314(a) ("The Director *may not* authorize an inter partes review to be instituted unless the Director determines that the information presented in the petition filed under section 311 and any response filed under section 313 shows that there is a reasonable likelihood that the petitioner would prevail with respect to at least 1 of the claims challenged in the petition." (emphasis added)). In the Preliminary Response,

[2] The Leahy-Smith America Invents Act, Pub. L. No. 112-29, 125 Stat. 284 (2011) ("AIA"), amended 35 U.S.C. § 103. Because the challenged claims of the '730 patent have an effective filing date before the effective date of the applicable AIA amendment, we refer to the pre-AIA version of 35 U.S.C. § 103. *See* Ex. 1001, codes (22), (60).

Patent Owner argues that we should exercise our discretion to deny the Petition in view of the district court case. Prelim. Resp. 4–6 (citing *Apple Inc. v. Fintiv, Inc.*, IPR2020-00019, Paper 11 (PTAB Mar. 20, 2020) (precedential)). We need not decide this issue, however, as we determine that Petitioner has not shown a reasonable likelihood that it would prevail with respect to at least one of the challenged claims.

B. Legal Standards

A claim is unpatentable for obviousness if, to one of ordinary skill in the pertinent art, "the differences between the subject matter sought to be patented and the prior art are such that the subject matter as a whole would have been obvious at the time the invention was made." *KSR Int'l Co. v. Teleflex Inc.*, 550 U.S. 398, 406 (2007) (quoting 35 U.S.C. § 103(a) (2006)). The question of obviousness is resolved on the basis of underlying factual determinations, including "the scope and content of the prior art"; "differences between the prior art and the claims at issue"; and "the level of ordinary skill in the pertinent art." *Graham v. John Deere Co.*, 383 U.S. 1, 17–18 (1966). Additionally, secondary considerations, such as "commercial success, long felt but unsolved needs, failure of others, etc., might be utilized to give light to the circumstances surrounding the origin of the subject matter sought to be patented. As indicia of obviousness or nonobviousness, these inquiries may have relevancy." *Id.* When conducting an obviousness analysis, we consider a prior art reference "not only for what it expressly teaches, but also for what it fairly suggests." *Bradium Techs. LLC v. Iancu*, 923 F.3d 1032, 1049 (Fed. Cir. 2019) (citation omitted).

A patent claim "is not proved obvious merely by demonstrating that each of its elements was, independently, known in the prior art." *KSR*,

550 U.S. at 418. An obviousness determination requires finding "both 'that a skilled artisan would have been motivated to combine the teachings of the prior art references to achieve the claimed invention, and that the skilled artisan would have had a reasonable expectation of success in doing so.'" *Intelligent Bio-Sys., Inc. v. Illumina Cambridge Ltd.*, 821 F.3d 1359, 1367–68 (Fed. Cir. 2016) (citation omitted); *see KSR*, 550 U.S. at 418 (for an obviousness analysis, "it can be important to identify a reason that would have prompted a person of ordinary skill in the relevant field to combine the elements in the way the claimed new invention does").

"Although the *KSR* test is flexible, the Board 'must still be careful not to allow hindsight reconstruction of references . . . without any explanation as to *how* or *why* the references would be combined to produce the claimed invention.'" *TriVascular, Inc. v. Samuels*, 812 F.3d 1056, 1066 (Fed. Cir. 2016) (citation omitted). Further, an assertion of obviousness "cannot be sustained by mere conclusory statements; instead, there must be some articulated reasoning with some rational underpinning to support the legal conclusion of obviousness." *KSR*, 550 U.S. at 418 (quoting *In re Kahn*, 441 F.3d 977, 988 (Fed. Cir. 2006)); *accord In re NuVasive, Inc.*, 842 F.3d 1376, 1383 (Fed. Cir. 2016) (stating that "conclusory statements" amount to an "insufficient articulation[] of motivation to combine"; "instead, the finding must be supported by a 'reasoned explanation'" (citation omitted)); *In re Magnum Oil Tools Int'l, Ltd.*, 829 F.3d 1364, 1380 (Fed. Cir. 2016) ("To satisfy its burden of proving obviousness, a petitioner cannot employ mere conclusory statements. The petitioner must instead articulate specific reasoning, based on evidence of record, to support the legal conclusion of obviousness.").

C. Level of Ordinary Skill in the Art

Petitioner argues that at the time of the '730 patent, a person of ordinary skill in the art would have had "a bachelor's degree in computer or electrical engineering (or an equivalent degree) with at least three years of experience in the field of encryption and security (or an equivalent)." Pet. 4. Patent Owner does not address the level of ordinary skill in the art in its Preliminary Response. Based on the record presented, including our review of the '730 patent and the types of problems and solutions described in the '730 patent and cited prior art, we adopt Petitioner's definition of the level of ordinary skill in the art and apply it for purposes of this Decision.

D. Claim Interpretation

We interpret the challenged claims

> using the same claim construction standard that would be used to construe the claim in a civil action under 35 U.S.C. 282(b), including construing the claim in accordance with the ordinary and customary meaning of such claim as understood by one of ordinary skill in the art and the prosecution history pertaining to the patent.

37 C.F.R. § 42.100(b) (2021). "In determining the meaning of [a] disputed claim limitation, we look principally to the intrinsic evidence of record, examining the claim language itself, the written description, and the prosecution history, if in evidence." *DePuy Spine, Inc. v. Medtronic Sofamor Danek, Inc.*, 469 F.3d 1005, 1014 (Fed. Cir. 2006). Claim terms are generally given their ordinary and customary meaning as would be understood by a person of ordinary skill in the art at the time of the invention and in the context of the entire patent disclosure. *Phillips v. AWH Corp.*, 415 F.3d 1303, 1313 (Fed. Cir. 2005) (en banc). "There are only two

exceptions to this general rule: 1) when a patentee sets out a definition and acts as his own lexicographer, or 2) when the patentee disavows the full scope of a claim term either in the specification or during prosecution." *Thorner v. Sony Comput. Entm't Am. LLC*, 669 F.3d 1362, 1365 (Fed. Cir. 2012).

Petitioner submits that no express interpretations of any claim terms are necessary to resolve the parties' dispute and "the claim terms should be given their plain and ordinary meaning." Pet. 8. Petitioner, however, makes various arguments regarding the phrase "tamper proof format" in claims 1 and 8. *Id.* at 8–9. We conclude that interpretation of "tamper proof format" is not necessary to determine whether to institute an *inter partes* review in this proceeding. *See Nidec Motor Corp. v. Zhongshan Broad Ocean Motor Co.*, 868 F.3d 1013, 1017 (Fed. Cir. 2017) ("Because we need only construe terms 'that are in controversy, and only to the extent necessary to resolve the controversy,' we need not construe [a particular claim limitation] where the construction is not 'material to the . . . dispute.'" (citation omitted)).

We interpret another phrase in the claims: "third-party trusted authority." Claims 1 and 8 of the '730 patent recite wirelessly sending "one or more codes from the plurality of codes and the other data values for authentication by an agent that is a third-party trusted authority possessing a list of device ID codes uniquely identifying legitimate integrated devices." Patent Owner points out that Petitioner argued in the district court case that a "third-party" is "an entity with a responsibility separate from executing the transaction itself." Prelim. Resp. 2 (quoting Ex. 2001 (Petitioner's Opening Claim Construction Brief in the district court case), 7). In the district court case, Petitioner argued that no construction of "third-party trusted authority" was needed and "[t]he intrinsic evidence does not suggest a party or

component numbered after a second party." Ex. 2001, 6–7. This was in response to its articulation of Patent Owner's position, namely, that a "third-party trusted authority" is "[a] third component that provides a second level of authentication." *Id.* at 6.[3]

Petitioner further argued that "[d]uring prosecution, the applicant explained a 'user []prov[ing] to the same institution that authenticates the fingerprint information that the user is who he purports to be' does not satisfy the 'third party' limitation," and "[t]he applicant emphasized the prior art 'disclose[d] two parties: the user and the institution.'" *Id.* at 7 (quoting remarks made by the applicant for the '730 patent) (alterations by Petitioner). Petitioner argued that "the intrinsic evidence suggests 'third party' relates to a specific class of entity occupying the aforementioned particular relationship." *Id.* Petitioner then pointed out that "the [S]pecification explains the agent for the trusted authority 'can be, for example, a government official, a notary, and/or an employee of a third party which operates the trusted key authority, or another form of witness.'" *Id.* (quoting Ex. 1001, col. 6, ll. 32–41). According to Petitioner, "[t]his 'witness' role further aligns with prosecution history where the applicant explained 'sending a code to a receiver of a *door that the user is trying to access*' does not satisfy the 'third party' limitation." *Id.* (quoting an amendment in the '730 patent file history).

---

[33] In its responsive brief, Patent Owner changed its position with respect to the terms "third-party trusted authority" and "agent" to "[n]o construction needed" and stated that it "no longer seeks to submit th[e] term[s] for construction." Ex. 2002, 12. The district court did not construe the terms. Ex. 3001.

Petitioner further offered expert testimony in the district court case to support an argument that "[c]ommon industry use of 'trusted third party' identifies 'third party' as an entity with a responsibility separate from executing the transaction itself." *Id.* at 7–8 (citing a declaration of Seth James Nielson, Ph.D. (Ex. 2003 ¶¶ 70–74) and a book, CRYPTOGRAPHIC LIBRARIES FOR DEVELOPERS). Dr. Nielson appears to best articulate the distinction Petitioner was drawing between a third component and a third entity: "the [S]pecification, the prosecution history, and common industry usage all suggest a 'third party' refers to an entity outside of the transaction or a witness thereto rather than a 'third component.'" Ex. 2003 ¶ 74.

In light of Petitioner's arguments in the district court case, Patent Owner contends that the parties "agree that a 'third-party trusted authority' is an institution or entity that is outside of the multi-party system (user and application or vendor) that is being authenticated." Prelim. Resp. 3.

We agree with Patent Owner. The plain meaning of "third-party trusted authority" suggests an entity or party separate from the principal parties to a transaction. *See, e.g.*, THE AMERICAN HERITAGE COLLEGE DICTIONARY 1433 (4th ed. 2004) ("third party n. . . . 2. One other than the principals involved in a transaction.") (Ex. 3002).

This is consistent with the description in the Specification. For example, Figure 3, reproduced above, depicts trusted key authority 320 as an entity separate from biometric key 100, authentication module 310, and application 330. As the Specification states, "[t]rusted key authority 320 is a third-party authority that is present in some embodiments in order to provide enhanced security." Ex. 1001, col. 5, ll. 40–42. Examples of trusted key authorities include "a government official, a notary, and/or an employee of a third party which operates the trusted key authority, or another form of

witness." *Id.* at col. 6, ll. 35–38. Petitioner's citations to the applicant's statement during prosecution of the '730 patent also are consistent with a third-party trusted authority being an entity separate from the principal parties to a transaction, as is the declaration of Dr. Nielson. *See* Ex. 2001, 6–8; Ex. 2003 ¶¶ 70–74. Thus, we interpret "third-party trusted authority" to mean a trusted authority that is an entity separate from the parties to a transaction.

Claim 1 also recites "responsive to authentication of the one or more codes and the other data values by the agent, receiving an access message from the agent allowing the user access to an application," and claim 8 similarly recites "responsive to the agent authenticating the one or more codes and the other data values, a radio frequency communicator, receives an access message from the agent allowing the user access to an application." Patent Owner argues that "[a]n 'access message' must be sent by the 'third party trusted authority'" and the parties "agree that the 'access message' originates from the 'third-party trusted authority' and communicates information regarding authentication." Prelim. Resp. 3–4 (citing Ex. 2001, 9). Both claims recite that the access message is received "from" the agent (which is a third-party trusted authority). Given that express requirement, we conclude that no further interpretation of the "access message" limitations is necessary.[4]

[4] Petitioner argued in the district court case that the limitations mean "[r]eceiving a signal from the agent permitting a user to access an application," Patent Owner argued that no construction was necessary and the phrases should be given their plain and ordinary meaning, and the district court determined that no construction was necessary. Ex. 3001, 3.

E. Obviousness Ground Based on Scott, Russell, and Lapsley

Petitioner contends that claims 1, 2, 4–9, and 11 are unpatentable over Scott, Russell, and Lapsley under 35 U.S.C. § 103(a), citing the testimony of Andrew Wolfe, Ph.D., as support. Pet. 22–43 (citing Ex. 1003). We are not persuaded that Petitioner has established a reasonable likelihood of prevailing on this asserted ground as to any of the challenged claims.

1. Scott

Scott describes "a portable personal identification device for providing secure access to a host facility" in which the device "includes a biometric sensor system capable of sensing a biometric trait of a user that is unique to the user and provides a biometric signal indicative thereof." Ex. 1005, p. 2, ll. 5–8. Figure 1 of Scott, reproduced below, illustrates an example.

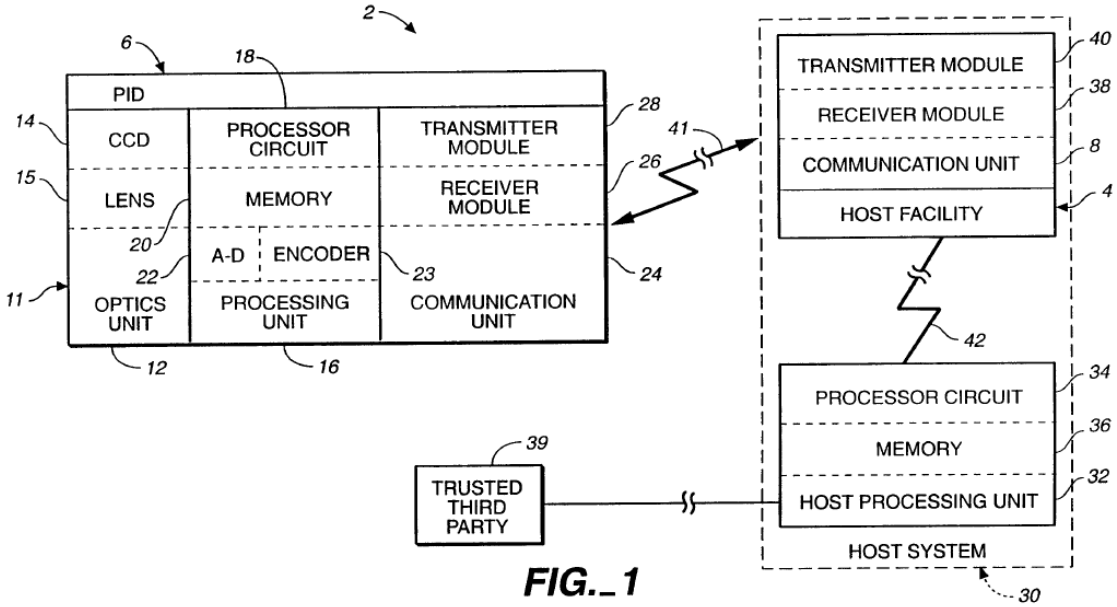

FIG._1

Figure 1 is a block diagram of security system 2 that provides access to host facility 4 (e.g., a bank, store, military base, computer system, automobile, home security system, or gate). *Id.* at p. 10, l. 1, p. 10, ll. 24–28.

A registered person carries battery powered personal identification device (PID) 6 (e.g., similar in size to a hand-held pager), which includes biometric sensor 11. *Id.* at p. 10, l. 28–p. 11, l. 5. Memory 20 stores an ID code that is set in PID 6 by the manufacturer. *Id.* at p. 11, ll. 11–13. The owner of PID 6 enrolls into the unit by scanning a finger using biometric sensor 11 to create an image that is stored as the fingerprint template in memory 20. *Id.* at p. 11, ll. 14–20, p. 15, l. 30–p. 16, l. 6. PID 6 communicates wirelessly via transmission signal 41 with host facility 4. *Id.* at p. 12, ll. 14–16.

Host facility 4 is part of host system 30 (e.g., a bank ATM system or point of sale system), which also includes host processing unit 32. *Id.* at p. 11, l. 31–p. 12, l. 2. "Host processing unit 32 may be located with host facility 4, or may be located at a remote location, where it may also serve other host facilities 4 in a distributed network 42." *Id.* at p. 12, ll. 3–5. "Memory 36 stores ID codes of enrolled individuals who have registered with host system 30." *Id.* at p. 12, ll. 6–7.

Figure 7 of Scott is reproduced below.

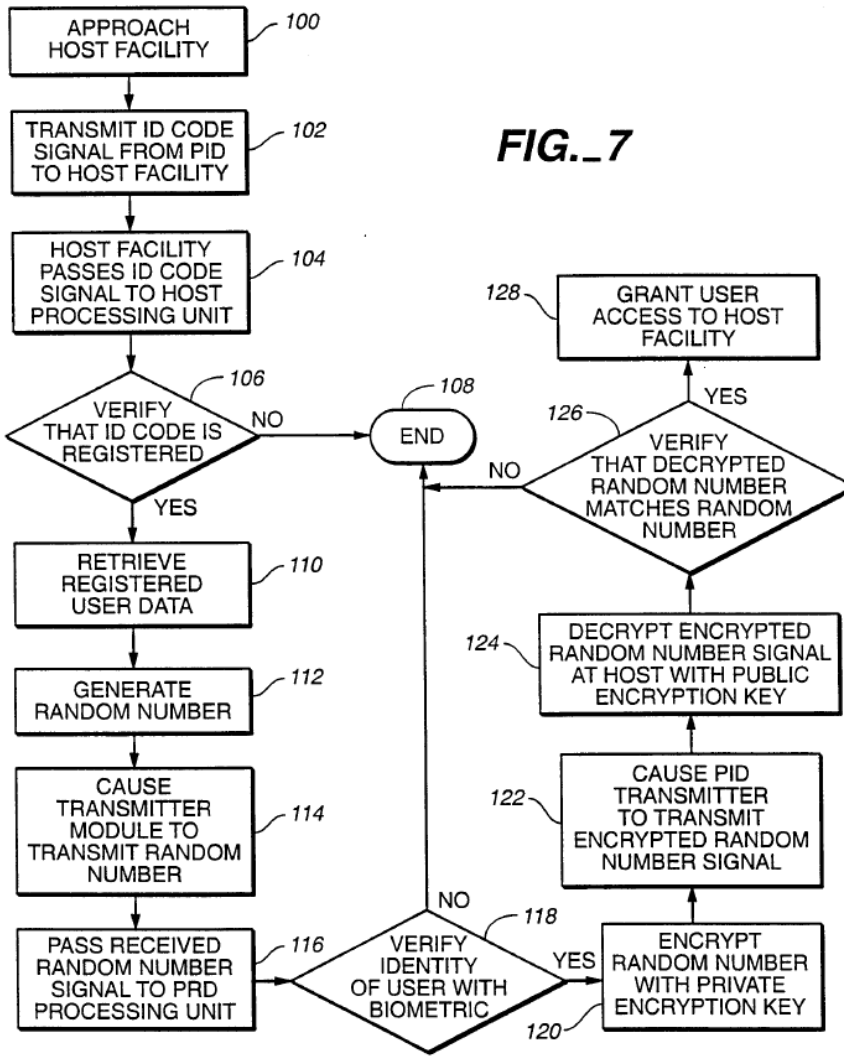

Figure 7 is a flow diagram of a method of accessing a host facility with a personal identification device. *Id.* at p. 10, ll. 13–14.

A user with PID 6 approaches host facility 4 (e.g., an ATM) and transmits the ID code to host receiver module 38, which passes it to host processing unit 32. *Id.* at p. 17, ll. 20–27 (steps 100–104). Host processing unit 32 verifies that the received ID code represents a registered ID code and, if so, the account or user information is located. *Id.* at p. 17, ll. 27–30 (steps 106, 110). Host processing unit 32, via transmitter module 40, sends a random number to PID 6, in response to which PID 6 performs a user

verification. *Id.* at p. 18, ll. 1–4 (steps 112–118). PID 6 verifies the user's fingerprint when the user places their finger on platen 15 of biometric sensor 11 by comparing the fingerprint signal to the stored fingerprint template. *Id.* at p. 16, ll. 19–29. If PID 6 successfully verifies the user's fingerprint, PID 6 encrypts the random number and sends it back to host processing unit 32, which decrypts the random number and verifies that it matches the random number it sent to PID 6. *Id.* at p. 18, ll. 5–14 (steps 120–126). If the random number is a match, host processing unit 32 grants the user access to host facility 4. *Id.* at p. 18, ll. 14–15 (step 128).

2. *Russell*

Russell describes systems "for providing secure interactions." Ex. 1006 ¶ 3. A PID with a biometric input component and transceiver is used "to both receive and transmit signals to external devices" to conduct secure interactions. *Id.* ¶¶ 182, 189. Russell discloses that signals received by and transmitted from the PID are "encrypted" and "[p]referably, an asymmetric encryption scheme, such as a public key/private key scheme is used." *Id.* ¶ 171.

3. *Lapsley*

Lapsley describes "a system and method of using biometrics for processing electronic financial transactions such as on-line debit, off-line debit and credit transactions without requiring the user to directly use or possess any man-made tokens such as debit or credit cards or checks." Ex. 1007 ¶ 2.

Figure 2 of Lapsley, reproduced below, illustrates an example.

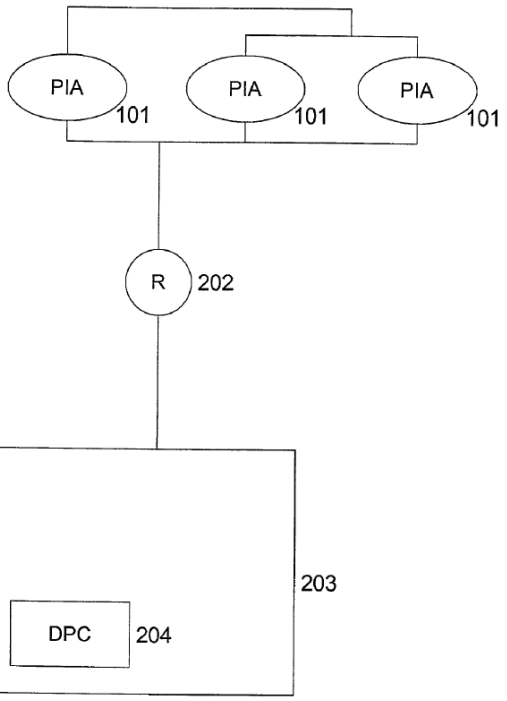

FIG. 2

Figure 2 is a block diagram showing the connections among Party Identification Devices (PIAs) 101, router 202, and Network Operations Center (NOC) 203. *Id.* ¶ 47. Figure 2 is in the context of a supermarket chain or other multi-lane retail chain with multiple PIAs 101 connected via an in-store local area network to local router 202, which is connected to NOC 203 via frame relay lines. *Id.* ¶ 98. NOC 203 includes Data Processing Center (DPC) 204. *Id.*

Each PIA 101 has a hardware identification code that is assigned to it and registered with DPC 204 at the time of manufacture, making the PIA uniquely identifiable to DPC 204 in transmissions from the PIA. *Id.* ¶¶ 85, 161. An entity uses the PIA hardware identification code to identify itself to the DPC. *Id.* ¶ 158.

Figure 7 of Lapsley is reproduced below.

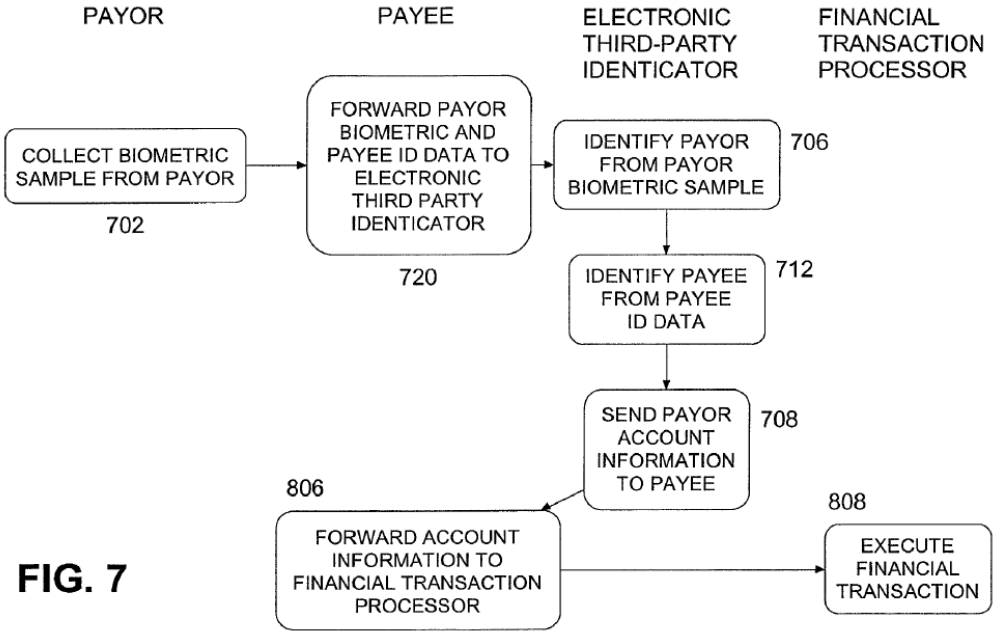

FIG. 7

Figure 7 is a flow diagram showing a transaction flow among the participants in a retail point-of-sale transaction. *Id.* ¶¶ 52, 166.

The customer/payor originates an electronic payment at a point-of-sale by submitting a bid biometric sample obtained by a biometric sensor of the PIA controlled by a payee/seller. *Id.* ¶¶ 166–167 (step 702). The PIA determines that the sample is not fraudulent and sends the sample to the DPC. *Id.* ¶ 167. The payor enters a PIN code into the PIA, and the PIA transmits the biometric data, PIN, and hardware identification code of the PIA to the DPC. *Id.* ¶ 168 (step 720). The DPC identifies the payor using the biometric sample, retrieves a list of financial accounts that the payor has registered with the system, and transmits the list to the PIA. *Id.* (steps 706, 708). The DPC identifies the payee using the PIA hardware identification code. *Id.* ¶¶ 166, 168. The payor selects a financial account at the PIA and the PIA transmits the financial information to the payee's in-store payment system (e.g., point-of-sale terminal or electronic cash

register). *Id.* ¶¶ 169–170. The in-store payment system authorizes the transaction. *Id.* ¶ 170.

4. Claim 1

Petitioner argues that Scott, Russell, and Lapsley collectively teach all of the limitations of claim 1. Pet. 22–35. With respect to the preamble of claim 1, Petitioner contends that Scott teaches a method of verifying a user during authentication of an "integrated device" (i.e., PID 6). *Id.* at 22.

With respect to limitation 1A, Petitioner argues that Scott teaches persistently storing "biometric data of the user" (i.e., a biometric template) and "a plurality of codes and other data values comprising a device ID code uniquely identifying the integrated device" (i.e., an ID code and other data values, such as a synchronization counter) in memory 20 of PID 6. *Id.* at 23–24. Limitation 1A also recites "persistently storing . . . a secret decryption value." Petitioner argues that memory 20 in Scott "stores a private key unique to each device and used for encryption," Scott's host facility "uses a corresponding public key to decrypt the transmission," and a person of ordinary skill in the art would have "recognize[d] the benefits of increased security and privacy by using the private/public key pair to protect all transmissions between PID 6 and host facility 4." *Id.* at 24–25. Petitioner further argues that "[t]o the extent Scott lacks an express mention of using the private key to decrypt a communication," Russell teaches encrypting signals received by and transmitted from a PID. *Id.* at 25–26. Finally, limitation 1A recites persistent storage "in a tamper proof format written to a storage element on the integrated device that is unable to be subsequently altered." Petitioner again points to Scott's disclosure of storing the biometric template, ID code, synchronization counter, and private key,

and states that "[t]o the extent Scott lacks an express mention of" storing in a tamper proof format, Russell teaches a personal data storage medium that is "not re-writable." *Id.* at 27–28 (emphasis omitted). According to Petitioner, a person of ordinary skill in the art would have been motivated to modify Scott's system to include the additional features of Russell. *Id.* at 26–29.

With respect to limitation 1B, Petitioner argues that Scott teaches biometric data that is, for example, a "voice pattern" or "iris pattern." *Id.* at 29.

With respect to limitations 1C and 1D, Petitioner contends that Scott teaches, in response to receiving a request for biometric verification of the user (i.e., "pressing a 'verify' button on the PID 6"), receiving scan data from a biometric scan (e.g., a voice biometric scan), and then comparing the scan data to the stored biometric template to verify the user's identity. *Id.* at 29–30.

With respect to limitation 1E, Petitioner relies on the teachings of Scott and Lapsley. As to the limitation of "responsive to a determination that the scan data matches the biometric data, wirelessly sending one or more codes from the plurality of codes and the other data values," Petitioner contends that, in response to the comparison discussed in connection with limitations 1C and 1D above, Scott's PID 6 transmits to host facility 4 "an encrypted message with [the] ID code and other data such as a synchronization counter." *Id.* at 31. As to the limitation of wirelessly sending the one or more codes "for authentication by an agent that is a third-party trusted authority possessing a list of device ID codes uniquely identifying legitimate integrated devices," Petitioner contends that "Scott discloses that the third-party trusted authority host processing unit 32 stores a list that includes an ID code and a public key for each registered PID 6,"

and host processing unit 32 compares the device ID code received from PID 6 to this list to authenticate PID 6 as a legitimately registered device. *Id.* at 31–32 (citing Ex. 1005, p. 5, ll. 10–21, p. 6, ll. 11–21, p. 7, l. 24–p. 8, l. 4, p. 8, ll. 18–22, p. 9, ll. 23–25, p. 11, ll. 12–13, p. 12, ll. 6–13, p. 13, ll. 10–15, p. 19, ll. 18–20, p. 19, ll. 30–32, Fig. 1). Although not cited in the Petition, Dr. Wolfe repeats these arguments in his testimony. *See* Ex. 1003 ¶ 56. Petitioner and Dr. Wolfe thus identify Scott's host processing unit 32 as corresponding to the claimed "third-party trusted authority." Also, in its analysis of limitations 1G and 1H, Petitioner makes clear that host facility 4 is the application (e.g., key card entry, ATM machine, garage door opener) that is accessed when the transaction is completed. Pet. 35 (citing Ex. 1005, p. 10, ll. 24–28 ("Referring to FIG. 1, a security system 2 provides access to one or more secure host facilities 4 only to registered persons."), p. 5, ll. 10–21, p. 8, ll. 5–12, p. 10, ll. 24–28, p. 11, ll. 31–32, p. 13, ll. 6–9, p. 14, ll. 6–12, p. 17, l. 20–p. 18, l. 19, p. 20, ll. 27–30; Ex. 1003 ¶ 61).

Patent Owner argues that "host processing unit 32 is *part of* the system being accessed—it is not a third party." Prelim. Resp. 7 (citing Ex. 1005, p. 11, ll. 24–25, p. 11, l. 30–p. 12, l. 1). As explained above, a "third-party trusted authority" is a trusted authority that is an entity separate from the parties to a transaction. *See supra* Section II.D. Scott describes both host processing unit 32 (the alleged "third-party trusted authority") and host facility 4 (the alleged application to be accessed by the user, "selected from a group consisting of a casino machine, a keyless lock, a garage door opener, an ATM machine, a hard drive, computer software, a web site and a file") as part of a single entity, host system 30. Ex. 1005, p. 11, l. 31–p. 12, l. 5 ("Host facility 4 is part of a host system 30. Host system 30 will typically be bank ATM systems, point of sale systems, and the like. Host

system 30 also includes a host processing unit 32, which has a processor circuit 34 and memory 36 . . . . Host processing unit 32 may be located with host facility 4, or may be located at a remote location, where it may also serve other host facilities 4 in a distributed network 42.”). Host processing unit 32, because it is not an entity separate from host facility 4, is not a third-party trusted authority.

Petitioner further argues that, “[t]o the extent that Patent Owner argues that Scott’s host processing unit 32 is not a third-party trusted authority, Lapsley . . . provides additional disclosure rendering this feature of the limitation obvious to a [person of ordinary skill in the art].” Pet. 33. Petitioner contends that Lapsley’s DPC is a trusted third-party authority that receives biometric data and a hardware identification code from a PIA and uniquely identifies the PIA by finding the hardware identification code on a list the DPC maintains. *Id.* (citing Ex. 1007 ¶¶ 54, 82, , 103, 104, 158, 161, 166–168).

Relying on Dr. Wolfe’s testimony, Petitioner argues that a person of ordinary skill in the art

> would have been motivated to modify Scott’s system such that authentication is performed by an external third-party trusted authority possessing a list of device ID codes that unique identify legitimate PIDs, as taught in Lapsley, to improve efficiency and flexibility of the system by consolidating ID codes to a central location at a secure third-party agent.

Id. at 33–34 (citing Ex. 1003 ¶ 59). Dr. Wolfe repeats this argument in his testimony, but does not state the basis for his opinion, rendering it of little value. *See* 37 C.F.R. § 42.65(a). Citing to Lapsley, Petitioner argues that an ordinarily skilled artisan “would have recognized the benefit in reducing the risk of fraud by improving security and authentication by using a trusted

third-party agent to verify devices involved in a transaction." Pet. 34 (citing Ex. 1007 ¶¶ 8, 9, 27, 29; Ex. 1003 ¶ 59). Petitioner argues that an ordinarily skilled artisan "would have further understood that it was common to have an ATM that is not owned by a bank use the bank as a third party for authorization and it was common for a store to use a bank or credit card exchange as a third party for authorization." *Id.* Petitioner does not cite any evidence for this argument.

Patent Owner responds that "Lapsley's DPC is part of the system providing access to a user's registered financial accounts, *i.e.*, a cloud based digital wallet—not a *third party* trusted authority." Prelim. Resp. 8 (citing Ex. 1007 ¶¶ 102, 138, 139). Patent Owner contends that, "[i]n Lapsley, instead of using a personal fob or phone to access the DPC digital wallet, the user utilizes a Party Identification Apparatus located at a store." *Id.* at 8–9 (citing Ex. 1007 ¶¶ 167–169). According to Patent Owner, "[a]s the DPC is accessed with the PIA to retrieve a list of user financial accounts stored in the DPC, the DPC must be the system being accessed/authenticated. Consequently, Lapsley's DPC is not what . . . Petitioner and Patent Owner agree constitutes a 'third-party trusted authority.'" *Id.* at 9.

We agree with Patent Owner. Petitioner has not explained sufficiently why Lapsley's DPC is a third-party trusted authority, what entities the DPC is a third-party relative to, or what application the user is being permitted to access in the asserted combination. As Patent Owner points out, the DPC appears to be what is being accessed, as the payee and payor, with the PIA, access a list of financial accounts from the DPC. *See id.* at 8–9; Ex. 1007 ¶¶ 167–170. Here, the DPC is the resource to be accessed, but it is a party to the transaction, rather than a third party. This is similar to the situation Petitioner argues that the applicant distinguished during prosecution:

"[d]uring prosecution, the applicant explained a 'user []prov[ing] to the same institution that authenticates the fingerprint information that the user is who he purports to be' does not satisfy the 'third party' limitation." *See* Ex. 2001, 7 (alterations by Petitioner).

Petitioner's reasons to combine also are conclusory and unsupported by persuasive evidence. In particular, Dr. Wolfe merely repeats Petitioner's arguments in his testimony, without further explaining them or identifying the basis for his opinions.[5] *See* Ex. 1003 ¶ 59. We agree with Patent Owner that Petitioner has not shown that Lapsley teaches a "third-party trusted authority" or that an ordinarily skilled artisan would have had reasons, with rational underpinning, to combine the teachings of Scott and Lapsley.

Because Petitioner does not show persuasively that either Scott or Lapsley teaches a "third-party trusted authority," as recited in claim 1, or that an ordinarily skilled artisan would have combined the teachings of those references, Petitioner has not shown sufficiently that Scott and Lapsley teach limitation 1E:

> responsive to a determination that the scan data matches the biometric data, wirelessly sending one or more codes from the plurality of codes and the other data values for authentication by an agent that is a third-party trusted authority possessing a list of device ID codes uniquely identifying legitimate integrated devices.

Petitioner's ground fails for an additional reason as well. Limitation 1G recites "responsive to authentication of the one or more codes and the other data values by the agent, receiving an access message from the agent allowing the user access to an application." Thus, the claim plainly requires

[5] Moreover, as explained below, the entirety of Dr. Wolfe's testimony lacks credibility and is entitled to no weight. *See infra* Section II.G.

that the access message be received "from" the agent (which is a "third-party trusted authority," per earlier limitation 1E). Petitioner argues that "in response to authentication of the received ID code by comparing it to a stored ID code, the receiver module 26 of PID 6 receives a random number signal *from the host processing unit 32* that enables access to a secure resource." Pet. 35 (citing Ex. 1005, p. 5, ll. 10–21, p. 8, ll. 5–12, p. 17, l. 20–p. 18, l. 19; Ex. 1003 ¶ 61) (emphasis added). Petitioner does not provide any further explanation as to why Scott's host processing unit 32 allegedly constitutes a "third-party trusted authority." *See id.* Nor does Petitioner mention Lapsley, or the combined teachings of Scott and Lapsley, in addressing limitation 1G. *See id.* Because Petitioner has not shown sufficiently that host processing unit 32 is a "third-party trusted authority," Petitioner likewise has not established that Scott's random number signal is an "access message [sent] from the agent allowing the user access to an application," as recited in limitation 1G. *See* Prelim. Resp. 9.

Petitioner has not shown a reasonable likelihood of prevailing on its assertion that claim 1 is unpatentable over Scott, Russell, and Lapsley.

5. Claims 2, 4–9, and 11

Claims 2 and 4–7 depend from claim 1. Claim 8 recites limitations 8E and 8G, which are similar to limitations 1E and 1G (emphasis added):

> a verification unit, in communication with the memory, receives scan data from a biometric scan for comparison against the biometric data, and if the scan data matches the biometric data, *wirelessly sends one or more codes from the plurality of codes and the other data values for authentication by an agent that is a third-party trusted authority possessing a list of device ID codes uniquely identifying legitimate integrated devices*, . . . and

> responsive to the agent authenticating the one or more codes and the other data values, a radio frequency communicator, *receives an access message from the agent* allowing the user access to an application . . . .

For limitation 8E, Petitioner relies on its previous arguments regarding limitation 1E and argues that "Scott discloses that the verification unit . . . wirelessly sends the data using a communication unit 24 which includes a transmitter module 28 and a receiver module 26." Pet. 42. Similarly, for limitation 8G, Petitioner relies on its previous arguments regarding limitation 1G and argues that "Scott discloses a radio frequency communicator . . . that receives an access message from the agent allowing the user access to an application." *Id.* at 42–43. Claims 9 and 11 depend from claim 8. For the reasons explained above regarding claim 1, Petitioner has not shown a reasonable likelihood of prevailing on its assertion that claims 2, 4–9, and 11 are unpatentable over Scott, Russell, and Lapsley.

F. Obviousness Grounds Based on Scott, Russell, Lapsley, and Robinson (Claims 3 and 10) and Scott, Russell, Lapsley, and Rhoads (Claim 6)

Petitioner contends that claims 3 and 10 are unpatentable over Scott, Russell, Lapsley, and Robinson, and claim 6 is unpatentable over Scott, Russell, Lapsley, and Rhoads, under 35 U.S.C. § 103(a). Pet. 43–46. Claims 3 and 6 depend from claim 1 and claim 10 depends from claim 8. Petitioner does not argue that the additional references (Robinson and Rhoads) teach the missing limitations 1E, 1G, 8E, and 8G of the parent claims. *See id.* Accordingly, for the reasons explained above, Petitioner has not shown a reasonable likelihood of prevailing on its assertion that claims 3, 6, and 10 are unpatentable. *See supra* Sections II.E.4–5.

G. Obviousness Ground Based on Berardi, Rosen, Shreve, and Kinoshita

Petitioner contends that claims 1, 2, 4–6, 8, 9, and 11 are unpatentable over Berardi, Rosen, Shreve, and Kinoshita under 35 U.S.C. § 103(a), citing the testimony of Dr. Wolfe as support. Pet. 46–60 (citing Ex. 1003).

Petitioner's allegations and citations to Berardi do not correspond to the disclosure of that reference. *See* Prelim. Resp. 11 ("With regard to Berardi, Petitioner references elements and paragraphs not contained within Berardi at all, *i.e.* in error.").[6]

For example, in alleging that Berardi teaches "responsive to a determination that the scan data matches the biometric data, wirelessly sending one or more codes from the plurality of codes and the other data values for authentication by an agent that is a third-party trusted authority," as recited in limitation 1E, Petitioner argues that "issuer system 1010," including "issuer account server (IAS) 1014 that processes fob identifying information," corresponds to the claimed "third-party trusted authority." Pet. 52–53. Berardi does not describe an "issuer system 1010" or "issuer account server (IAS) 1014." Petitioner cites to Exhibit 1010, col. 10, l. 56–col. 11, l. 12, col. 22, ll. 1–41, and col. 28, ll. 50–67, in support of its arguments for limitation 1E. The cited material in columns 10 and 11 is inapposite (and does not discuss issuer system 1010 or IAS 1014), Berardi

[6] Patent Owner notes that Petitioner's errors "make[] it difficult to ascertain Petitioner's argument[s]," but argues that "a full reading of Berardi makes clear that it fails to disclose a 'third-party trusted authority.'" Prelim. Resp. 11. Patent Owner then presents substantive arguments as to Berardi, Rosen, Shreve, and Kinoshita. *Id.* at 11–16. We deny the Petition as to this ground based on Petitioner's failure to present an understandable case as to Berardi and do not reach Patent Owner's additional arguments.

ends its disclosure at line 30 (not line 41) of column 22, and column 28 does not exist in Berardi.

Also, in its analysis of limitation 1E, Petitioner states that "the fob 102 wirelessly transmits to RFID reader 104 (which transmits to POS Device 110/issuer system 1010) a message for authorization th[at] includes fob identifying information which includes an account number unique to the fob." Pet. 52–53 (citing Ex. 1010, col. 10, l. 56–col. 11, l. 12, col. 22, ll. 1–19, col. 28, ll. 50–67). We examined Petitioner's citations to discern whether Petitioner might have mistakenly referenced issuer system 1010 rather than POS Device 110. Column 10, line 56–column 11, line 12 of Berardi discusses communication via RF antenna 106 and RF module 302, and does not discuss POS Device 110. Column 22, lines 1–19 span a portion of the claims of Berardi and do not appear relevant. Column 28, lines 50–67 do not exist in Berardi. We conclude that Petitioner did not simply misidentify or mislabel the component of Berardi it sought to reference.

There are numerous similar errors. For example, Petitioner relies on column 28, lines 50–67, which do not exist in Berardi, for limitations 1A, 1C, 1D, and 1F. *See* Pet. 47–48, 51–52, 54. Petitioner's citation to column 12, lines 36–41 in its analysis of limitations 1B and 1C does not correspond to biometric information, or anything else we can discern to be relevant to these limitations. *See id.* at 51. Instead, it discusses RFID reader 104 authenticating fob 102. Ex. 1010, col. 12, ll. 36–41. We do not intend to list all such errors here. We decline to speculate as to what Petitioner might have intended to cite. The result of the errors in the Petition is that we are unable to understand Petitioner's allegations and Patent Owner cannot fairly be said to be on notice of Petitioner's challenge based on Berardi.

Petitioner contends that (1) Rosen provides additional disclosure with respect to limitation 1A, which recites persistent storage "in a tamper proof format written to a storage element on the integrated device that is unable to be subsequently altered"; (2) to the extent Berardi fails to teach limitation 1E, Shreve provides additional disclosure; and (3) to the extent Berardi fails to teach limitation 1G, Kinoshita provides additional disclosure. Pet. 49–50, 53–55. However, because Petitioner has not sufficiently explained its allegations as to Berardi, it is impossible to understand Petitioner's proposed combinations with Rosen, Shreve, and Kinoshita. Moreover, as explained above, Petitioner's arguments regarding limitations 1A–1F are based largely on material that does not exist in Berardi. Thus, even if we were able to discern Petitioner's arguments for limitations 1A–1F, Petitioner's cited evidence does not support its allegations for other elements of claim 1.

Petitioner's allegations for independent claim 8 largely track or refer back to its analysis of claim 1 and, thus, suffer from the same defects. *See id.* at 58–60. Petitioner's allegations for dependent claims 2, 4–6, 9, and 11 do not shed any additional light on what Petitioner might have intended for claim 1, and instead largely cite irrelevant or non-existent material in Berardi. *Id.* at 56–57, 60.[7]

---

[7] We are concerned with Dr. Wolfe's testimony. Paragraphs 89–125 of his declaration (Exhibit 1003) appear to be a near carbon copy of pages 46–60 of the Petition, and include the Petition's citations to obviously incorrect or non-existent material in Berardi. These circumstances suggest a lack of attention, as even a cursory review would have shown that his testimony regarding Berardi includes numerous references to irrelevant or non-existent material, rendering that testimony not useful. This is not an instance of one or even a few inadvertent errors that might go missed upon a diligent review. The entirety of Dr. Wolfe's testimony regarding Berardi is defective on its

In sum, we cannot discern Petitioner's allegations of obviousness based on Berardi, Rosen, Shreve, and Kinoshita, nor can we say Patent Owner is on notice of those allegations. Accordingly, Petitioner has not shown a reasonable likelihood of prevailing on its assertion that claims 1, 2, 4–6, 8, 9, and 11 are unpatentable over Berardi, Rosen, Shreve, and Kinoshita.

III. CONCLUSION

Based on the arguments presented in the Petition, we conclude that Petitioner has not demonstrated a reasonable likelihood of prevailing with respect to at least one claim of the '730 patent challenged in the Petition. Therefore, we do not institute an *inter partes* review.

IV. ORDER

In consideration of the foregoing, it is hereby:

ORDERED that the Petition is denied and no *inter partes* review is instituted.

---

face. For these reasons, the entirety of Dr. Wolfe's testimony lacks credibility and is entitled to little or no weight.

FOR PETITIONER:

James M. Glass
Marissa Ducca
Richard Lowry
Sean Gloth
QUINN EMANUEL URQUHART & SULLIVAN, LLP
jimglass@quinnemanuel.com
marissaducca@quinnemanuel.com
richardlowry@quinnemanuel.com
seangloth@quinnemanuel.com

FOR PATENT OWNER:

David L. Hecht
James Zak
HECHT PARTNERS LLP
dhecht@hechtpartners.com