www.comsoc.org/pubs/surveys

IEEE COMMUNICATIONS SURVEYS

AN OVERVIEW OF CDMA EVOLUTION TOWARD WIDEBAND CDMA

RAMJEE PRASAD, DELFT UNIVERSITY OF TECHNOLOGY
TERO OJANPERÄ, NOKIA TELECOMMUNICATIONS

ABSTRACT

Third-generation mobile radio networks, often dubbed as 3G, have been under intense research and discussion recently and will emerge around the year 2000. In the International Telecommunications Union (ITU), third generation networks are called International Mobile Telecommunications-2000 (IMT-2000), and in Europe, Universal Mobile Telecommunications System (UMTS). IMT-2000 will provide a multitude of services, especially multimedia and high-bit-rate packet data. Wideband code division multiple access (CDMA) has emerged as the mainstream air interface solution for the third-generation networks. In Europe, Japan, Korea, and the United States, wideband CDMA systems are currently being standarized. This article provides a comprehensive introduction to wideband CDMA. It also provides a review of the wideband CDMA air interface proposals including WCDMA in Europe and Japan, cdma2000 in the United States, and wideband CDMA in Korea.

Recently, extensive investigations have been carried out into the application of a code division multiple access (CDMA) system as an air interface multiple access scheme for IMT-2000/UMTS (International Mobile Telecommunications System 2000/Universal Mobile Telecommunications System). It appears that CDMA is the strongest candidate for the third-generation wireless personal communication systems. Many research and development (R&D) projects in the field of wideband CDMA have been going on in Europe, Japan, the United States, and Korea [1-5]. It seems that wideband CDMA will be an appropriate answer to the question: "What will be the multiple access scheme for IMT-2000/UMTS?"

Emerging requirements for higher rate data services and better spectrum efficiency are the main drivers identified for the third-generation mobile radio systems. In the ITU, third-generation networks are called IMT-2000, and in Europe, UMTS. Since 1985, the ITU has been developing IMT-2000, previously termed Future Public Land Mobile Telephone System (FPLMTS). In ETSI, UMTS standardization started 1990 when subtechnical committee SMG5 was established. The main objectives for the IMT-2000 air interface can be summarized as:

- Full coverage and mobility for 144 Kb/s, preferably 384 Kb/s
- Limited coverage and mobility for 2 Mb/s
- High spectrum efficiency compared to existing systems
- High flexibility to introduce new services

The bit rate targets have been specified according to the Integrated Services Digital Network (ISDN) rates. The 144-Kb/s data rate provides the ISDN 2B+D channel, 384 Kb/s provides the ISDN H0 channel, and 1920 Kb/s provides the ISDN H12 channel.[1] However, it may be that the main IMT-2000 services are not ISDN-based services. It has to be noted that these figures have been subject to considerable debate. Ultimately, market demand will determine what data rates will be offered in commercial systems. Figure 1 describes the relation between bit rates and mobility for the second- and third-generation systems.

The targets of third-generation systems are wide and, depending on the main driver, system solutions will be different. The maturity of second-generation mobile radio systems varies, ranging from over 40 percent penetration in Scandinavia to a very low penetration in developing countries, where the cellular systems are in the beginning of their lifecycle. Therefore, it is clear that the need to develop a new system varies, and the different views and needs may result in several different variants of IMT-2000. In addition, different backward compatibility requirements influence the technology applied to third-generation systems.

Main regional standards bodies have already decided the preferred technology for IMT-2000. The fast development during recent years has been due to the Japanese initiative. In the beginning of 1997, the Association for Radio Industry and Business (ARIB), a standardization body responsible for Japan's radio standardization, decided to proceed with detailed standardization of wideband CDMA. The technology push from Japan accelerated standardization in Europe and the United States. During 1997 joint parameters for Japanese and European wideband CDMA proposals were agreed upon. The air interface is now commonly referred as WCDMA. In January 1998, strong support behind wideband CDMA led to

[1] *Even though 2 Mb/s is used generally as the upper limit for IMT-2000 services, the exact service is specified to be 1.92 or 2.048 Mb/s.*

1 SAMSUNG 1047

the selection of WCDMA as the UMTS terrestrial air interface scheme for FDD frequency bands in ETSI. The selection of wideband CDMA was also backed by Asian and American GSM operators. For TDD bands, a time division CDMA (TD-CDMA) concept was selected. In the United States in March 1998, the TIA (Telecommunications Industry Association) TR45.5 committee, responsible for IS-95 standardization, adopted a framework for wideband CDMA backward compatible to IS-95, called cdma2000. TR45.3, responsible for IS-136 standardization, adopted a TDMA-based third-generation proposal, UWC-136 (Universal Wireless Communications), based on the recommendation from the UWCC in February 1998. Korea is still considering two wideband CDMA technologies, one similar to WCDMA and the other similar to cdma2000.

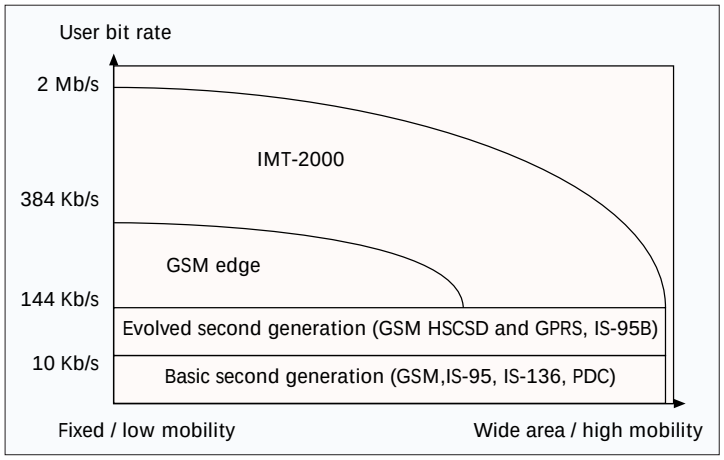

Figure 1. *IMT-2000 user bit rate vs. coverage and mobility.*

The preferred technology for third-generation systems depends on technical, political, and business factors. Technical factors include issues such as provision of required data rates, and performance. Political factors involve reaching agreement between standards bodies and taking into account the different starting points of different countries and regions. On one hand, the investments into the existing systems motivate a backward compatibility approach. On the other, new business opportunities or the possibility of changing the current situation might motivate a new approach.

This article is organized as follows. The past, present, and future activities of CDMA are presented in the next section. The following section explains the basic concepts and elements of CDMA. Then the IS-95 air interface is introduced according to the new IS-95 standard, followed by a brief discussion of air interface technologies for third-generation, with a short description of TD-CDMA. Wideband CDMA schemes are then discussed in great length and conclusions are given in the final section.

CDMA: Past, Present, and Future

The origins of spread spectrum are in military field and navigation systems. Techniques developed to counteract intentional jamming have also proved suitable for communication through dispersive channels in cellular applications. In this section we highlight the milestones for CDMA development starting from the 1950s after the invention of the Shannon theorem [6]. An extensive overview of spread spectrum history is given in [7].

In 1949, John Pierce wrote a technical memorandum where he described a multiplexing system in which a common medium carries coded signals that need not be synchronized. This system can be classified as a time hopping spread spectrum multiple access system [7]. Claude Shannon and Robert Pierce introduced the basic ideas of CDMA in 1949 by describing the interference averaging effect and the graceful degradation of CDMA [8]. In 1950, De Rosa-Rogoff proposed a direct sequence spread spectrum system and introduced the processing gain equation and noise multiplexing idea [7]. In 1956, Price and Green filed for the antimultipath "RAKE" patent [7]. Signals arriving over different propagation paths can be resolved by a wideband spread spectrum signal and combined by the RAKE receiver. The near-far problem (i.e., a high interference overwhelming a weaker spread spectrum signal) was first mentioned in 1961 by Magnuski [7].

For cellular application spread spectrum was suggested by Cooper and Nettleton in 1978 [9]. During the 1980s Qualcomm investigated DS-CDMA techniques, which finally led to the commercialization of cellular spread spectrum communications in the form of the narrowband CDMA IS-95 standard in July 1993. Commercial operation of IS-95 systems started in 1996. Multiuser detection (MUD) has been subject to extensive research since 1986 when Verdu formulated an optimum multiuser detection for the additive white Gaussian noise (AWGN) channel, maximum likelihood sequence estimator (MLSE) [10].

During the 1990s wideband CDMA techniques with a bandwidth of 5 MHz or more have been studied intensively throughout the world, and several trial systems have been built and tested [4]. These include FRAMES Multiple Access (FRAMES FMA2) in Europe, Core-A in Japan, the European/Japanese harmonized WCDMA scheme, cdma2000 in the United States, and the Telecommunication Technology Association I and II (TTA I and TTA II) schemes in Korea. Introduction of third-generation wireless communication systems using wideband CDMA is expected around the year 2000.

Based on the above description, the CDMA era is divided in three periods: the pioneer CDMA era, the narrowband CDMA era, and the wideband CDMA era, as shown in Table 1.

Pioneer Era			
1949	John Pierce: time hopping spread spectrum		
1949	Claude Shannon and Robert Pierce: basic ideas of CDMA		
1950	De Rosa-Rogoff: direct sequence spread spectrum		
1956	Price and Green: antimultipath "RAKE" patent		
1961	Magnuski: near-far problem		
1970s	Several developments for military field and navigation systems		
Narrowband CDMA Era			
1978	Cooper and Nettleton: cellular application of spread spectrum		
1980s	Investigation of narrowband CDMA techniques for cellular applications		
1986	Formulation of optimum multiuser detection by Verdu		
1993	IS-95 standard		
Wideband CDMA Era			
1995	Europe	:FRAMES FMA2	WCDMA
	Japan	:Core-A	WCDMA
	USA	:cdma2000	
	Korea	:TTA I TTA II	
2000s	Commercialization of wideband CDMA systems		

Table 1. *CDMA era.*

CDMA Concepts

In CDMA each user is assigned a unique code sequence it uses to encode its information-bearing signal. The receiver, knowing the code sequences of the user, decodes a received signal after reception and recovers the original data. This is possible since the crosscorrelations between the code of the desired user and the codes of the other users are small. Since the bandwidth of the code signal is chosen to be much larger than the bandwidth of the information-bearing signal, the encoding process enlarges (spreads) the spectrum of the signal and is therefore also known as spread-spectrum modulation. The resulting signal is also called a spread-spectrum signal, and CDMA is often denoted as spread-spectrum multiple access (SSMA) [1–3, 11–12].

The spectral spreading of the transmitted signal gives to CDMA its multiple access capability. It is therefore important to know the techniques necessary to generate spread-spectrum signals and the properties of these signals. A spread-spectrum modulation technique must be fulfill two criteria:

- The transmission bandwidth must be much larger than the information bandwidth.
- The resulting radio-frequency bandwidth is determined by a function other than the information being sent (so the bandwidth is statistically independent of the information signal). This excludes modulation techniques like frequency modulation (FM) and phase modulation (PM).

The ratio of transmitted bandwidth to information bandwidth is called the *processing gain*, G_p, of the spread-spectrum system,

$$G_p = \frac{B_t}{B_i} \tag{1}$$

where B_t is the transmission bandwidth and B_i is the bandwidth of the information-bearing signal.

The receiver correlates the received signal with a synchronously generated replica of the spreading code to recover the original information-bearing signal. This implies that the receiver must know the code used to modulate the data.

Because of the coding and the resulting enlarged bandwidth, SS signals have a number of properties that differ from the properties of narrowband signals. The most interesting ones, from the communication systems point of view, are discussed below. To have a clear understanding, each property has been briefly explained with the help of illustrations, if necessary, by applying direct sequence spread-spectrum techniques.

Multiple Access Capability — If multiple users transmit a spread-spectrum signal at the same time, the receiver will still be able to distinguish between the users provided each user has a unique code that has a sufficiently low cross-correlation with the other codes. Correlating the received signal with a code signal from a certain user will then only despread the signal of this user, while the other spread-spectrum signals will remain spread over a large bandwidth. Thus, within the information bandwidth the power of the desired user will be larger than the interfering power provided there are not too many interferers, and the desired signal can be extracted. The multiple access capability is illustrated in Fig. 2. In Fig. 2a, two users generate a spread-spectrum signal from their narrowband data signals. In Fig. 2b both users transmit their spread-spectrum signals at the same time. At the receiver 1 only the signal of user 1 is "despread" and the data recovered.

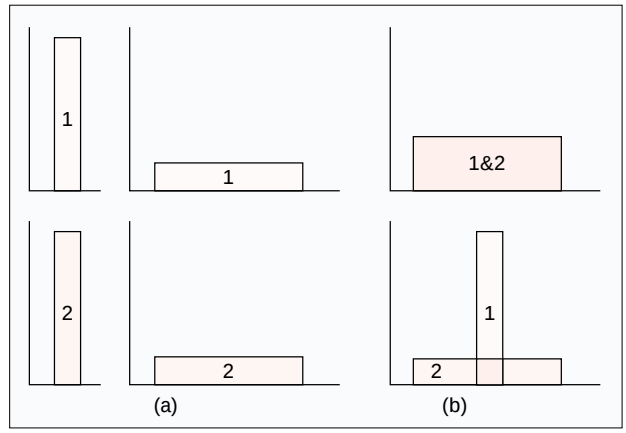

Figure 2. *Principle of spread-spectrum multiple access.*

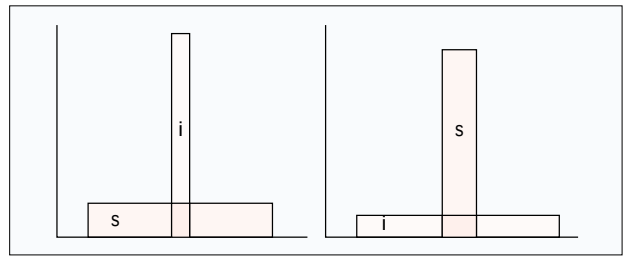

Figure 3. *Interference rejection.*

Protection Against Multipath Interference — In a radio channel there is not just one path between a transmitter and receiver. Due to reflections (and refractions) a signal will be received from a number of different paths. The signals of the different paths are all copies of the same transmitted signal but with different amplitudes, phases, delays, and arrival angles. Adding these signals at the receiver will be constructive at some of the frequencies and destructive at others. In the time domain, this results in a dispersed signal. Spread-spectrum modulation can combat this multipath interference; however, the way in which this is achieved depends very much on the type of modulation used. In the next section, where CDMA schemes based on different modulation methods are discussed, we show for each scheme how multipath interference rejection is obtained.

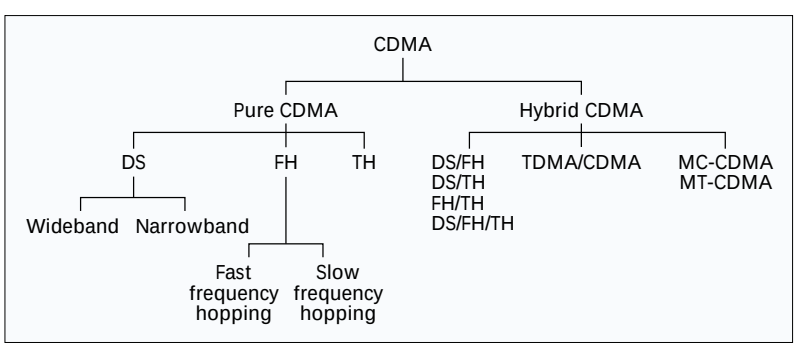

Figure 4. *Classification of CDMA.*

PRIVACY — The transmitted signal can only be despread and the data recovered if the code is known to the receiver.

INTERFERENCE REJECTION — Cross-correlating the code signal with a narrowband signal will spread the power of the narrowband signal thereby reducing the interfering power in the information bandwidth. This is illustrated in Fig. 3. The spread-spectrum signal (s) receives a narrowband interference (i). At the receiver the SS signal is "despread" while the interference signal is spread, making it appear as background noise compared to the despread signal.

ANTI-JAMMING CAPABILITY, ESPECIALLY NARROWBAND JAMMING — This is more or less the same as interference rejection except the interference is now willfully inflicted on the system. It is this property, together with the next one, that makes spread-spectrum modulation attractive for military applications.

LOW PROBABILITY OF INTERCEPTION (LPI) — Because of its low power density, the spread-spectrum signal is difficult to detect and intercept by a hostile listener.

A general classification of CDMA is given in Fig. 4. There are a number of modulation techniques that generate spread-spectrum signals. We briefly discuss the most important ones.

- Direct sequence spread-spectrum — The information-bearing signal is multiplied directly by a high chip rate code signal.
- Frequency hopping spread-spectrum — The carrier frequency at which the information-bearing signal is transmitted is rapidly changed according to the code signal
- Time hopping spread-spectrum — The information-bearing signal is not transmitted continuously. Instead the signal is transmitted in short bursts where the times of the bursts are decided by the code signal.
- Hybrid modulation — Two or more of the above-mentioned SS modulation techniques can be used together to combine the advantages and, it is hoped, to combat their disadvantages. Furthermore, it is possible to combine CDMA with other multiple access methods: TDMA, multicarrier (MC), or multitone (MT) modulation. In the case of MC-CDMA, spreading is done along the frequency axis, while for MT-CDMA spreading is done along the time axis. Note that MC-CDMA and MT-CDMA are based on orthogonal frequency division multiplexing (OFDM).

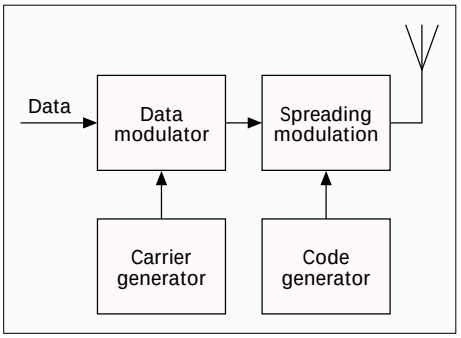

Figure 5. *Block diagram of a DS-SS transmitter*

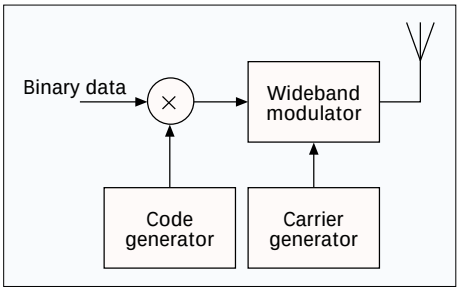

Figure 6. *Modified block diagram of a DS-SS transmitter.*

In the next section the above-mentioned pure CDMA modulation techniques are used to show the multiple access capability of CDMA. However, the remainder of the sections will mainly concentrate on direct sequence (DS)-CDMA and its related subjects.

SPREAD-SPECTRUM MULTIPLE ACCESS

DIRECT SEQUENCE — In DS-CDMA the modulated information-bearing signal (the data signal) is directly modulated by a digital, discrete-time, discrete-valued code signal. The data signal can be either analog or digital; in most cases it is digital. In the case of a digital signal the data modulation is often omitted and the data signal is directly multiplied by the code signal and the resulting signal modulates the wideband carrier. It is from this direct multiplication that the direct sequence CDMA gets its name.

In Fig. 5 a block diagram of a DS-CDMA transmitter is given. The binary data signal modulates a RF carrier. The modulated carrier is then modulated by the code signal. This code signal consists of a number of code bits called "chips" that can be either +1 or –1. To obtain the desired spreading of the signal, the chip rate of the code signal must be much higher than the chip rate of the information signal. For the code modulation various modulation techniques can be used, but usually some form of phase shift keying (PSK) like binary phase shift keying (BPSK), differential binary phase shift keying (D-BPSK), quadrature phase shift keying (QPSK), or minimum shift keying (MSK) is employed.

If we omit the data modulation and use BPSK for the code modulation, we get the block diagram given in Fig. 6. The DS-SS signal resulting from this transmitter is shown in Fig. 7. The rate of the code signal is called the chip rate; one chip denotes one symbol when referring to spreading code signals. In this figure, 10 code chips per information symbol are transmitted (the code chip rate is 10 times the data rate) so the processing gain is equal to 10.

After transmission of the signal, the receiver (shown in Fig. 8) uses coherent demodulation to despread the SS signal, using a locally generated code sequence. To be able to perform the despreading operation, the receiver must not only know the code sequence used to spread the signal, but the codes of the received signal and the locally generated code must also be synchronized. This synchronization must be accomplished at the beginning of

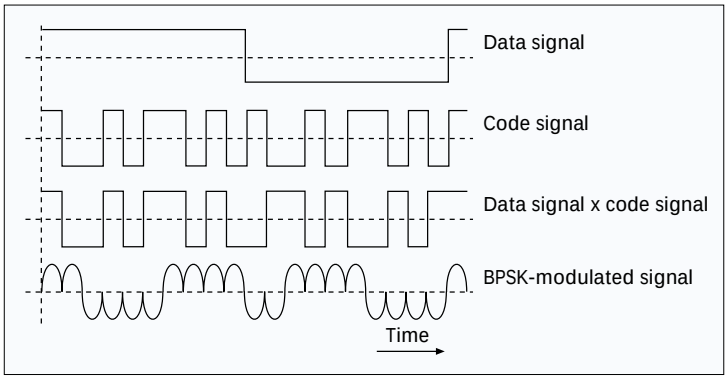

Figure 7. *Generation of a BPSK-modulated SS signal.*

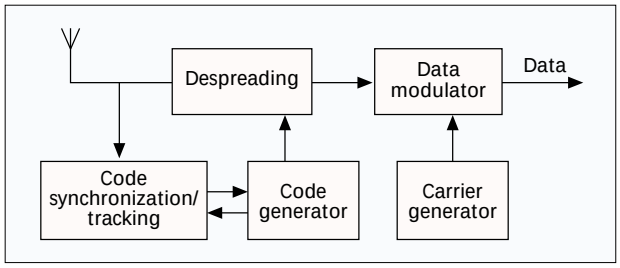

■ **Figure 8.** *Receiver of a DS-SS signal.*

the reception and maintained until the whole signal has been received. The code synchronization/tracking block performs this operation. After despreading a data modulated signal results, and after demodulation the original data can be recovered.

In the previous section a number of advantageous properties of spread-spectrum signals were mentioned. The most important of those properties from the viewpoint of CDMA is the multiple access capability, the multipath interference rejection, the narrowband interference rejection, and with respect to secure/private communication, the LPI. We explain these four properties for the case of DS-CDMA.

- *Multiple access:* If multiple users use the channel at the same time, there will be multiple DS signals overlapping in time and frequency. At the receiver coherent demodulation is used to remove the code modulation. This operation concentrates the power of the desired user in the information bandwidth. If the crosscorrelations between the code of the desired user and the codes of the interfering users are small, coherent detection will only put a small part of the power of the interfering signals into the information bandwidth.
- *Multipath interference:* If the code sequence has an ideal autocorrelation function, then the correlation function is zero outside the interval $[-T_c, T_c]$, where T_c is the chip duration. This means that if the desired signal and a version that is delayed for more than $2T_c$ are received, coherent demodulation will treat the delayed version as an interfering signal, putting only a small part of the power in the information bandwidth.
- *Narrowband interference:* The coherent detection at the receiver involves a multiplication of the received signal by a locally generated code sequence. However, as we saw at the transmitter, multiplying a narrowband signal with a wideband code sequence spreads the spectrum of the narrowband signal so that its power in the information bandwidth decreases by a factor equal to the processing gain.
- *LPI:* Because the direct sequence signal uses the whole signal spectrum all the time, it will have a very low transmitted power per hertz. This makes it very difficult to detect a DS signal.

Apart from the above-mentioned properties, DS-CDMA has a number of other specific properties that we can divide into advantageous (+) and disadvantageous (-) behavior:

+ The generation of the coded signal is easy. It can be performed by a simple multiplication.
+ Since only one carrier frequency has to be generated, the frequency synthesizer (carrier generator) is simple.
+ Coherent demodulation of the DS signal is possible.
+ No synchronization among the users is necessary.
– It is difficult to acquire and maintain the synchronization of the locally generated code signal and the received signal. Synchronization has to be kept within a fraction of the chip time.
– For correct reception the synchronization error of locally generated code sequence and the received code sequence must be very small, a fraction of the chip time. This combined with the nonavailability of large contiguous frequency bands practically limits the bandwidth to 10–20 MHz.
– The power received from users close to the base station is much higher than that received from users further away. Since a user continuously transmits over the whole bandwidth, a user close to the base will constantly create a lot of interference for users far from the base station, making their reception impossible. This near-far effect can be solved by applying a power control algorithm so that all users are received by the base station with the same average power. However this control proves to be quite difficult.

FREQUENCY HOPPING — In frequency hopping CDMA, the carrier frequency of the modulated information signal is not constant but changes periodically. During time intervals T the carrier frequency remains the same, but after each time interval the carrier hops to another (or possibly the same) frequency. The hopping pattern is decided by the code signal. The set of available frequencies the carrier can attain is called the *hop-set*.

The frequency occupation of an FH-SS system differs considerably from a DS-SS system. A DS system occupies the whole frequency band when it transmits, whereas an FH system uses only a small part of the bandwidth when it transmits, but the location of this part differs in time.

The difference between the FH-SS and the DH-SS frequency usage is illustrated in Fig. 9. Suppose an FH system is transmitting in frequency band 2 during the first time period. A DS system transmitting in the same time period spreads its signal power over the whole frequency band so the power transmitted in frequency band 2 will be much less than that of the FH system. However, the DS system transmits in frequency band 2 during all time periods while the FH system only uses this band part of the time. On average, both systems will transmit the same power in the frequency band.

The block diagram for an FH-CDMA system is given in Fig. 10. The data signal is baseband modulated. Using a fast frequency synthesizer that is controlled by the code signal, the carrier frequency is converted up to the transmission frequency.

The inverse process takes place at the receiver. Using a locally generated code sequence, the received signal is con-

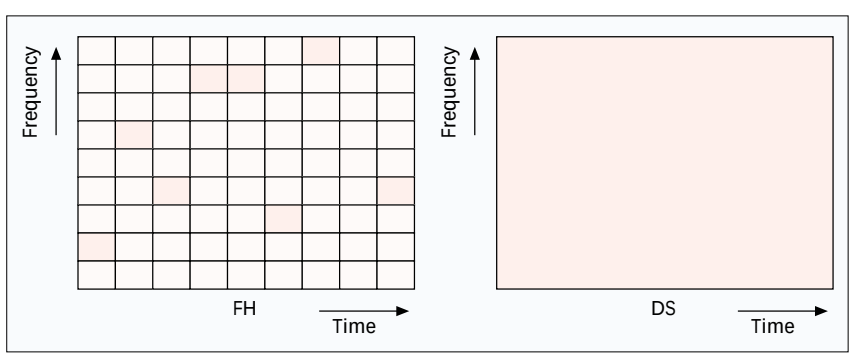

■ **Figure 9.** *Time/frequency occupancy of FH and DS signals.*

verted down to the baseband. The data is recovered after (baseband) demodulation. The synchronization/tracking circuit ensures that the hopping of the locally generated carrier synchronizes to the hopping pattern of the received carrier so that correct despreading of the signal is possible.

Within frequency hopping CDMA a distinction is made that is based on the hopping rate of the carrier. If the hopping rate is (much) greater than the symbol rate, one speaks of a fast frequency hopping (F-FH). In this case the carrier frequency changes a number of times during the transmission of one symbol, so that one bit is transmitted in different frequencies. If the hopping rate is (much) smaller than the symbol rate, one speaks of slow frequency hopping (S-FH). In this case multiple symbols are transmitted at the same frequency.

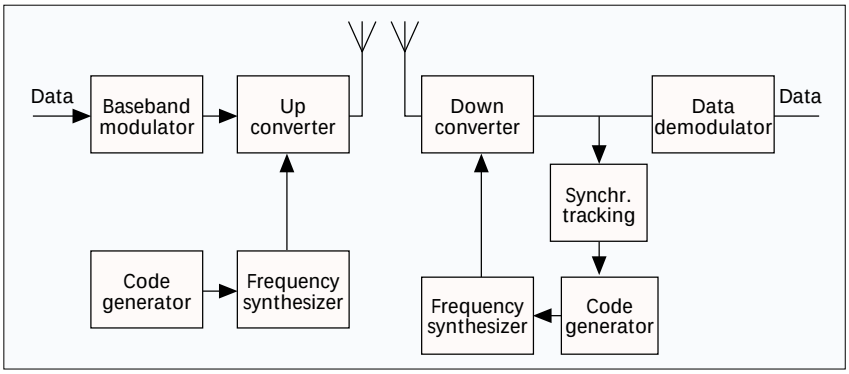

Figure 10. *Block diagram of an FH-CDMA transmitter and receiver.*

The occupied bandwidth of the signal on one of the hopping frequencies depends not only on the bandwidth of the information signal but also on the shape of the hopping signal and the hopping frequency. If the hopping frequency is much smaller than the information bandwidth (which is the case in slow frequency hopping), then the information bandwidth is the main factor that decides the occupied bandwidth. If, however, the hopping frequency is much greater than the information bandwidth, the pulse shape of the hopping signal will decide the occupied bandwidth at one hopping frequency. If this pulse shape is very abrupt (resulting in very abrupt frequency changes), the frequency band will be very broad, limiting the number of hop frequencies. If we make sure that the frequency changes are smooth, the frequency band at each hopping frequency will be about $1/T_h$ times the frequency bandwidth, where T_h is equal to the hopping frequency. We can make the frequency changes smooth by decreasing the transmitted power before a frequency hop and increasing it again when the hopping frequency has changed.

As has been done for the DS-CDMA, we discuss the properties of FH-CDMA with respect to multiple access capability, multipath interference rejection, narrowband interference rejection, and probability of interception.

MULTIPLE ACCESS — It is easy to visualize how the F-FH and S-FH CDMA obtain their multiple access capability. In the F-FH one symbol is transmitted in different frequency bands. If the desired user is the only one to transmit in most of the frequency bands, the received power of the desired signal will be much higher than the interfering power and the signal will be received correctly.

In the S-FH multiple symbols are transmitted at one frequency. If the probability of other users transmitting in the same frequency band is low enough, the desired user will be received correctly most of the time. For those times that interfering users transmit in the same frequency band, error-correcting codes are used to recover the data transmitted during that period.

MULTIPATH INTERFERENCE — In the F-FH CDMA the carrier frequency changes a number of times during the transmission of one symbol. Thus, a particular signal frequency will be modulated and transmitted on a number of carrier frequencies. The multipath effect is different at the different carrier frequencies. As a result, signal frequencies that are amplified at one carrier frequency will be attenuated at another carrier frequency and vice versa. At the receiver the responses at the different hopping frequencies are averaged, thus reducing the multipath interference. Since usually noncoherent combining is used, this is not as effective as the multipath interference rejection in a DS-CDMA system, but it still gives quite an improvement.

NARROWBAND INTERFERENCE — Suppose a narrowband signal is interfering on one of the hopping frequencies. If there are G_p hopping frequencies (where G_p is the processing gain), the desired user will (on the average) use the hopping frequency where the interferer is located $1/G_p$ percent of the time. The interference is therefore reduced by a factor G_p.

LPI — The difficulty in intercepting an FH signal lies not in its low transmission power. During a transmission, it uses as much power per hertz as a continuous transmission. But the frequency at which the signal is going to be transmitted is unknown, and the duration of the transmission at a particular frequency is quite small. Therefore, although the signal is more readily intercepted than a DS signal, it is still a difficult task to perform.

Apart from the above-mentioned properties, the FH-CDMA has a number of other specific properties that we can divide into advantageous (+) and disadvantageous (-) behavior:

+ Synchronization is much easier with FH-CDMA than with DS-CDMA. With FH-CDMA synchronization has to be within a fraction of the hop time. Since spectral spreading is not obtained by using a very high hopping frequency but by using a large hop-set, the hop time will be much longer than the chip time of a DS-CDMA system. Thus, an FH-CDMA system allows a larger synchronization error.
+ The different frequency bands that an FH signal can occupy do not have to be contiguous because we can make the frequency synthesizer easily skip over certain parts of the spectrum. Combined with the easier synchronization, this allows much higher spread-spectrum bandwidths.
+ The probability of multiple users transmitting in the same frequency band at the same time is small. A user transmitting far from the base station will be received by it even if users close to the base station are transmitting, since those users will probably be transmitting at different frequencies. Thus, the near-far performance is much better than that of DS.
+ Because of the larger possible bandwidth a FH system can employ, it offers a higher possible reduction of narrowband interference than a DS system.
– A highly sophisticated frequency synthesizer is necessary.
– An abrupt change of the signal when changing frequency

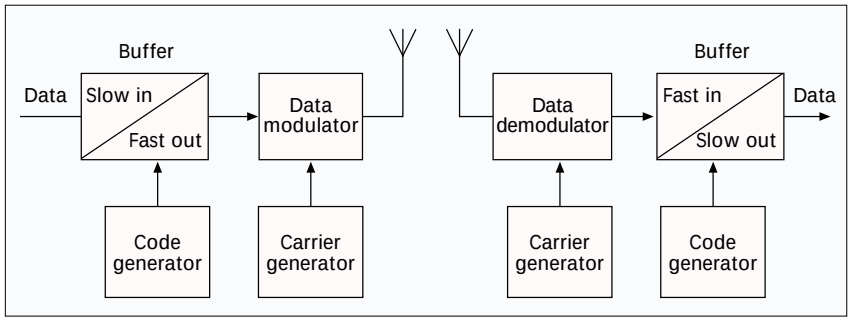

■ **Figure 11.** *Block diagram of an TH-CDMA transmitter and receiver.*

bands will lead to an increase in the frequency band occupied. To avoid this, the signal has to be turned off and on when changing frequency.

– Coherent demodulation is difficult because of the problems in maintaining phase relationships during hopping.

TIME HOPPING — In time hopping CDMA the data signal is transmitted in rapid bursts at time intervals determined by the code assigned to the user. The time axis is divided into frames, and each frame is divided into M time slots. During each frame the user will transmit in one of the M time slots. Which of the M time slots is transmitted depends on the code signal assigned to the user. Since a user transmits all of its data in one, instead of M time slots, the frequency it needs for its transmission has increased by a factor M. A block diagram of a TH-CDMA system is given in Fig. 11. Figure 12 shows the time-frequency plot of the TH-CDMA systems. Comparing Fig. 12 with Fig. 9, we see that the TH-CDMA uses the whole wideband spectrum for short periods instead of parts of the spectrum all of the time. Following the same procedure as for the previous CDMA schemes, we discuss the properties of TH-CDMA with respect to multiple access capability, multipath interference rejection, narrowband interference rejection, and probability of interception.

- Multiple access — The multiple access capability of TH-SS signals is acquired in the same manner as that of the FH-SS signals; namely, by making the probability of users' transmissions in the same frequency band at the same time small. In the case of time hopping all transmissions are in the same frequency band, so the probability of more than one transmission at the same time must be small. This is again achieved by assigning different codes to different users. If multiple transmissions do occur, error-correcting codes ensure that the desired signal can still be recovered. If there is synchronization among the users, and the assigned codes are such that no more than one user transmits at a particular slot, then the TH-CDMA reduces to a TDMA scheme where the slot in which a user transmits is not fixed but changes from frame to frame.
- Multipath interference — In the time hopping CDMA, a signal is transmitted in reduced time. The signaling rate, therefore, increases and dispersion of the signal will now lead to overlap of adjacent bits. Therefore, no advantage is to be gained with respect to multipath interference rejection.
- Narrowband interference — A TH-CDMA signal is transmitted in reduced time. This reduction is equal to $1/G_p$, where G_p is the processing gain. At the receiver we will only receive an interfering signal during the reception of the desired signal. Thus, we only receive the interfering signal $1/G_p$ percent of the time, reducing the interfering power by a factor G_p.
- LPI — With TH-CDMA the frequency at which a user transmits is constant but the times at which a user transmits are unknown, and the durations of the transmissions are very short. Particularly when multiple users are transmitting, this makes it difficult for an intercepting receiver to distinguish the beginning and end of a transmission and to decide which transmissions belong to which user.

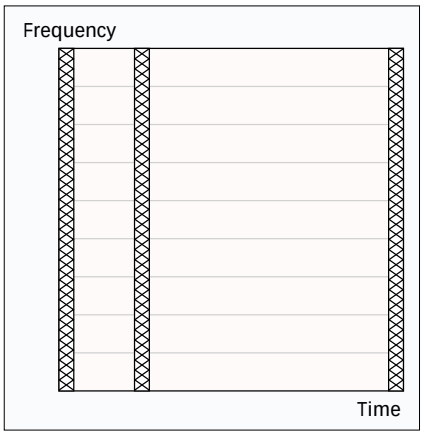

■ **Figure 12.** *Time-frequency plot of the TH-CDMA.*

Apart from the above-mentioned properties, the TH-CDMA has a number of other specific properties that we can divide into advantageous (+) and disadvantageous (-) behavior:

+ Implementation is simpler than that of FH-CDMA.
+ It is a very useful method when the transmitter is average-power limited but not peak-power limited since the data are transmitted is short bursts at high power.
+ As with the FH-CDMA, the near-far problem is much less of a problem since TH-CDMA is an avoidance system, so most of the time a terminal far from the base station transmits alone, and is not hindered by transmissions from stations close by.

– It takes a long time before the code is synchronized, and the time in which the receiver has to perform the synchronization is short.

– If multiple transmissions occur, a large number of data bits are lost, so a good error-correcting code and data interleaving are necessary.

HYBRID SYSTEMS — The hybrid CDMA systems include all CDMA systems that employ a combination of two or more of the above-mentioned spread-spectrum modulation techniques or a combination of CDMA with some other multiple access technique. By combining the basic spread-spectrum modulation techniques, we have four possible hybrid systems: DS/FH, DS/TH, FH/TH, and DS/FH/TH; and by combining CDMA with TDMA or multicarrier modulation we get two more: CDMA/TDMA and MC-CDMA.

The idea of the hybrid system is to combine the specific advantages of each of the modulation techniques. If we take, for example, the combined DS/FH system, we have the advantage of the anti-multipath property of the DS system combined with the favorable near-far operation of the FH system. Of course, the disadvantage lies in the increased complexity of the transmitter and receiver. For illustration purposes, we give a block diagram of a combined DS/FH CDMA transmitter in Fig. 13.

The data signal is first spread using a DS code signal. The spread signal is then modulated on a carrier whose frequency hops according to another code

sequence. A code clock ensures a fixed relation between the two codes.

Basic DS-CDMA Elements

In this section, we review the fundamental elements for understanding direct sequence CDMA and its application into third-generation systems, namely, RAKE receiver, power control, soft handover, interfrequency handover, and multiuser detection.

RAKE Receiver — A spread-spectrum signal waveform is well matched to the multipath channel. In a multipath channel, the original transmitted signal reflects from obstacles such as buildings, and mountains, and the receiver receives several copies of the signal with different delays. If the signals arrive more than one chip apart from each other, the receiver can resolve them. Actually, from each multipath signal's point of view, other multipath signals can be regarded as interference and they are suppressed by the processing gain. However, a further benefit is obtained if the resolved multipath signals are combined using RAKE receiver. Thus, the signal waveform of CDMA signals facilitates utilization of multipath diversity. Expressing the same phenomenon in the frequency domain means that the bandwidth of the transmitted signal is larger than the coherence bandwidth of the channel and the channel is frequency selective (i.e., only part of the signal is affected by the fading).

RAKE receiver consists of correlators, each receiving a multipath signal. After despreading by correlators, the signals are combined using, for example, maximal ratio combining. Since the received multipath signals are fading independently, diversity order and thus performance are improved. Fig. 14 illustrates the principle of RAKE receiver. After spreading and modulation the signal is transmitted and it passes through a multipath channel, which can be modeled by a tapped delay line (i.e., the reflected signals are delayed and attenuated in the channel). In Fig. 14 we have three multipath components with different delays ($\tau 1$, $\tau 2$, and $\tau 3$) and attenuation factors (a1, a2, and a3), each corresponding to a different propagation path. The RAKE receiver has a receiver finger for each multipath component. In each finger, the received signal is correlated by a spreading code, which is time-aligned with the delay of the multipath signal. After despreading, the signals are weighted and combined. In Fig. 14, maximal ratio combining is used, that is, each signal is weighted by the path gain (attenuation factor). Due to the mobile movement the scattering environment will change, and thus, the delays and attenuation factors will change as well. Therefore, it is necessary to measure the tapped delay line profile and to reallocate RAKE fingers whenever there is need. Small-scale changes, less than one chip, are taken care of by a code tracking loop, which tracks the time delay of each multipath signal.

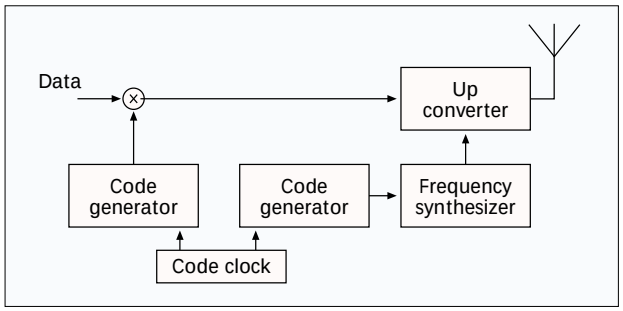

Figure 13. *Hybrid DS-FH transmitter.*

Power Control — In the uplink of a DS-CDMA system, the requirement for power control is the most serious negative point. The power control problem arises because of the multiple access interference. All users in a DS-CDMA system transmit the messages by using the same bandwidth at the same time and therefore users interfere with one another. Due to the propagation mechanism, the signal received by the base station from a user terminal close to the base station will be stronger than the signal received from another terminal located at the cell boundary. Hence, the distant users will be dominated by the close user. This is called the *near-far effect*. To achieve a considerable capacity, all signals, irrespective of distance, should arrive at the base station with the same mean power. A solution to this problem is power control, which attempts to achieve a constant received mean power for each user. Therefore, the performance of the transmitter power control (TPC) is one of the several dependent factors when deciding on the capacity of a DS-CDMA system.

In contrast to the uplink, in the downlink all signals propagate through the same channel and thus are received by a mobile station with equal power. Therefore, no power control is required to eliminate near-far problem. The power control is, however, required to minimize the interference to other cells and to compensate against the interference from other cells. The worst-case situation for a mobile station occurs when the mobile station is at the cell edge, equidistant from three base stations. However, the interference from other cells does not vary very abruptly.

In addition being useful against interfering users, power

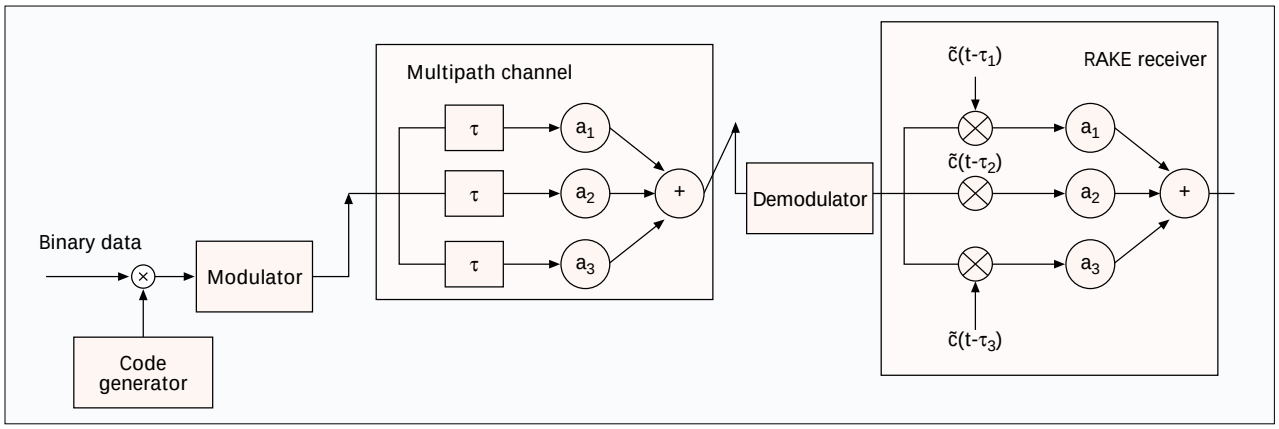

Figure 14. *Principle of RAKE receiver.*

control improves the performance of DS-CDMA against fading channel by compensating the fading dips. If it followed the channel fading perfectly, power control would turn a fading channel into AWGN channel by eliminating the fading dips completely.

There exist two types of power control principles: open loop and closed loop. The open loop power control measures the interference conditions from the channel and adjusts the transmission power accordingly. However, since the fast fading does not correlate between uplink and downlink, open loop power control will achieve the right power target only on average. Therefore, closed loop power control is required. The closed loop power control measures the signal-to-interference ratio (SIR) and sends commands to the transmitter on the other end to adjust the transmission power.

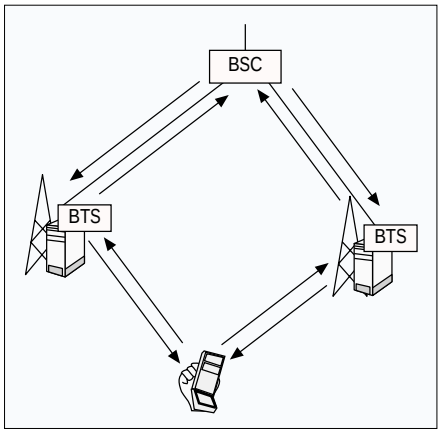

■ **Figure 15.** *Principle of soft handover with two base station transceivers (BTS).*

SOFT HANDOVER — In soft handover a mobile station is connected to more than one base station simultaneously. Soft handover is used in CDMA to reduce the interference into other cells and to improve performance through macro diversity. Softer handover is a soft handover between two sectors of a cell.

Neighboring cells of a cellular system using either FDMA or TDMA do not use the frequencies used by the given cell (i.e., there is spatial separation between cells using the same frequencies). This is called the frequency reuse concept. Because of the processing gain, such spatial separation is not needed in CDMA, and frequency reuse factor of one can be used. Usually, a mobile station performs a handover when the signal strength of a neighboring cell exceeds the signal strength of the current cell with a given threshold. This is called *hard handover*. Since in a CDMA system the neighboring cell frequencies are the same as in the given cell, this type of approach would cause excessive interference into the neighboring cells and thus a capacity degradation. In order to avoid this interference, an instantaneous handover from the current cell to the new cell would be required when the signal strength of the new cell exceeds the signal strength of the current cell. This is not, however, feasible in practice. The handover mechanism should always allow the mobile station to connect into a cell, which it receives with the highest power (i.e., with the lowest pathloss). Since in soft handover the mobile station is connected to either two or more base stations, its transmission power can be controlled according to the cell, which the mobile station receives with the highest signal strength. A mobile station enters the soft handover state when the signal strength of neighboring cell exceeds a certain threshold but is still below the current base station's signal strength.

Fortunately, the signal structure of CDMA is well suited for the implementation of soft handover. This is because in the uplink, two or more base stations can receive the same signal because of the reuse factor of one; and in the downlink the mobile station can coherently combine the signals from different base stations since it sees them as just additional multipath components. This provides an additional benefit called macro diversity (i.e., the diversity gain provided by the reception of one or more additional signals). A separate channel called pilot is usually used for the signal strength measurements for handover purposes.

In the downlink, however, soft handover creates more interference to the system since the new base station now transmits an additional signal for the mobile station. It is possible that the mobile station cannot catch all the energy that the base station transmits due to a limited number of RAKE fingers. Thus, the gain of soft handover in the downlink depends on the gain of macro diversity and the loss of performance due to increased interference. Fig. 15 illustrates the soft handover principle with two base stations involved. In the uplink the mobile station signal is received by the two base stations, which, after demodulation and combining, pass the signal forward to the combining point, typically to the base station controller (BSC). In the downlink the same information is transmitted via both base stations, and the mobile station receives the information from two base stations as separate multipath signals and can therefore combine them.

Bandwidth	1.25 MHz
Chip Rate	1.2288 Mc/s
Frequency band uplink	869–894 MHz 1930–1980 MHz
Frequency band downlink	824–849 MHz 1850–1910 MHz
Frame length	20 ms
Bit rates	Rate set 1: 9.6 Kb/s Rate set 2: 14.4 Kb/s IS-95B: 115.2 Kb/s
Speech code	QCELP 8 Kb/s ACELP 13 Kb/s
Soft handover	Yes
Power control	Uplink: open loop + fast closed loop Downlink: slow quality loop
Number of RAKE fingers	4
Spreading codes	Walsh+Long M-sequence

■ **Table 2.** *IS-95 Air interface parameters.*

INTERFREQUENCY HANDOVER — The third-generation CDMA networks will have multiple frequency carriers in each cell, and a hot-spot cell could have a larger number of frequencies than neigboring cells. Furthermore, in hierarchical cell structures, micro cells will have a different frequency than the macro cell overlaying the micro cells. Therefore, an efficient procedure is needed for a handover between different frequencies. A blind handover used by second-generation CDMA does not result in an adequate call quality. Instead, the mobile station has to be able to measure the signal strength and quality of an another carrier frequency, while still maintaining the connection in the current carrier frequency. Since a CDMA transmission is continuous, there are no idle slots for the interfrequency measurement/ as in the TDMA-based systems. Therefore, compressed mode and

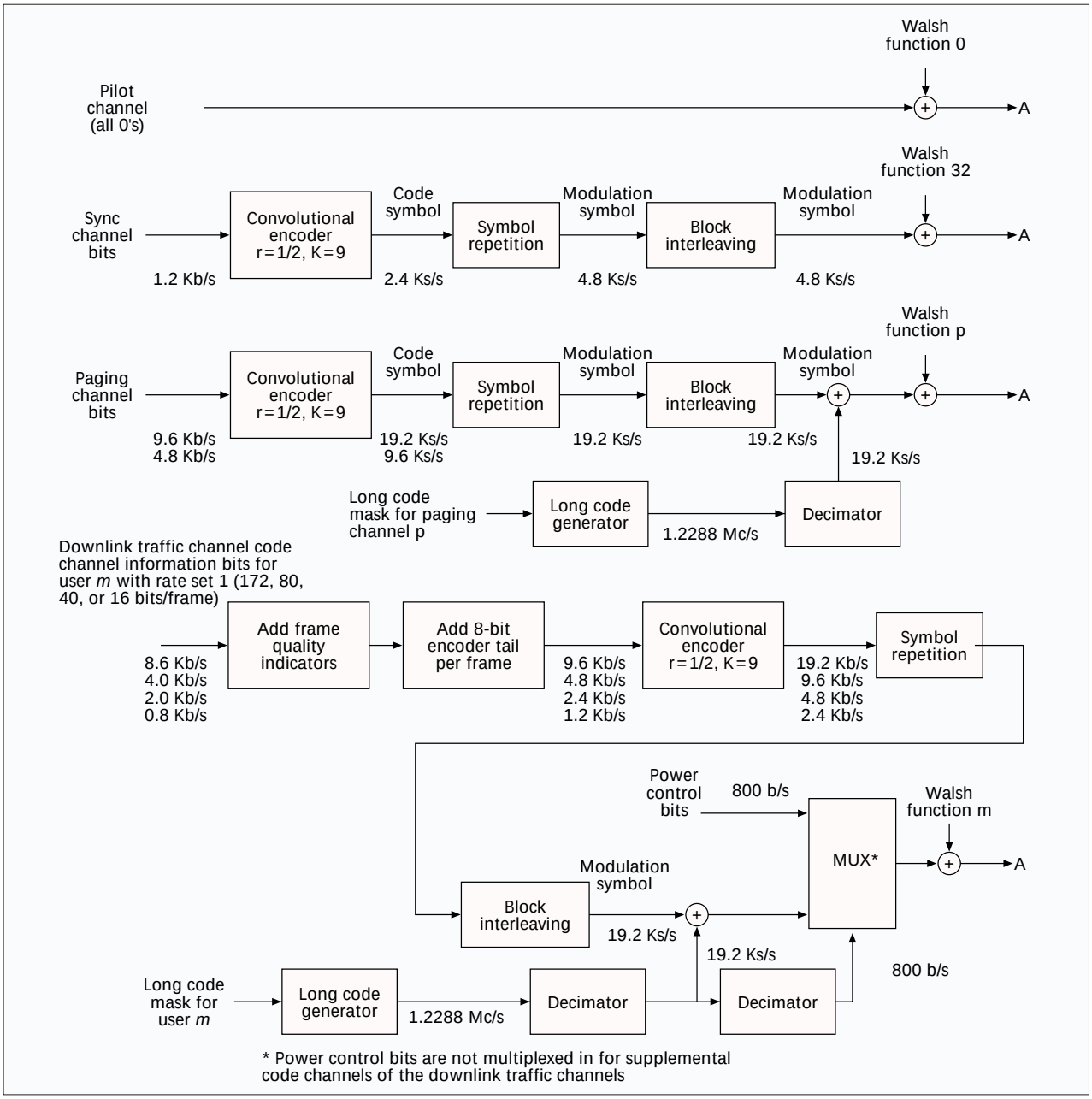

■ **Figure 16a.** *Downlink CDMA channel structure (reproduced with written permission from TIA).*

dual receiver have been proposed as a solution to interfrequency handover [13]. In the compressed mode, measurements slots are created by transmitting the data of a frame, for example, with a lower spreading ratio during a shorter period, and the rest of the frame is utilized for the measurements on other carriers. The dual receiver can measure other frequencies without affecting the reception of the current frequency.

MULTIUSER DETECTION — The current CDMA receivers are based on the RAKE receiver principle, which considers other users' signals as interference. However, in an optimum receiver all signals would be detected jointly or interference from other signals would be removed by subtracting them from the desired signal. This is possible because the correlation properties between signals are known (i.e., the interference is deterministic not random).

The capacity of a direct sequence CDMA system using RAKE receiver is interference limited. In practice this means that when a new user, or interferer, enters the network, other users' service quality will go below the acceptable level. The more the network can resist interference the more users can be served. Multiple access interference that disturbs a base or mobile station is a sum of both intra- and inter-cell interference.

Multiuser detection (MUD), also called joint detection and interference cancellation (IC), provides a means of reducing the effect of multiple access interference, and hence increases the system capacity. In the first place MUD is considered to cancel only the intra-cell interference, meaning that in a practical system the capacity will be limited by the efficiency of the algorithm and the inter-cell interference.

In addition to capacity improvement, MUD alleviates the near/far problem typical to DS-CDMA systems. A mobile sta-

tion close to a base station may block the whole cell traffic by using too high a transmission power. If this user is detected first and subtracted from the input signal, the other users do not see the interference.

Since optimal multiuser detection is very complex and in practice impossible to implement for any reasonable number of users, a number of suboptimum multiuser and interference cancellation receivers have been developed. The suboptimum receivers can be divided into two main categories: linear detectors and interference cancellation. Linear detectors apply a linear transform into the outputs of the matched filters that are trying to remove the multiple access interference

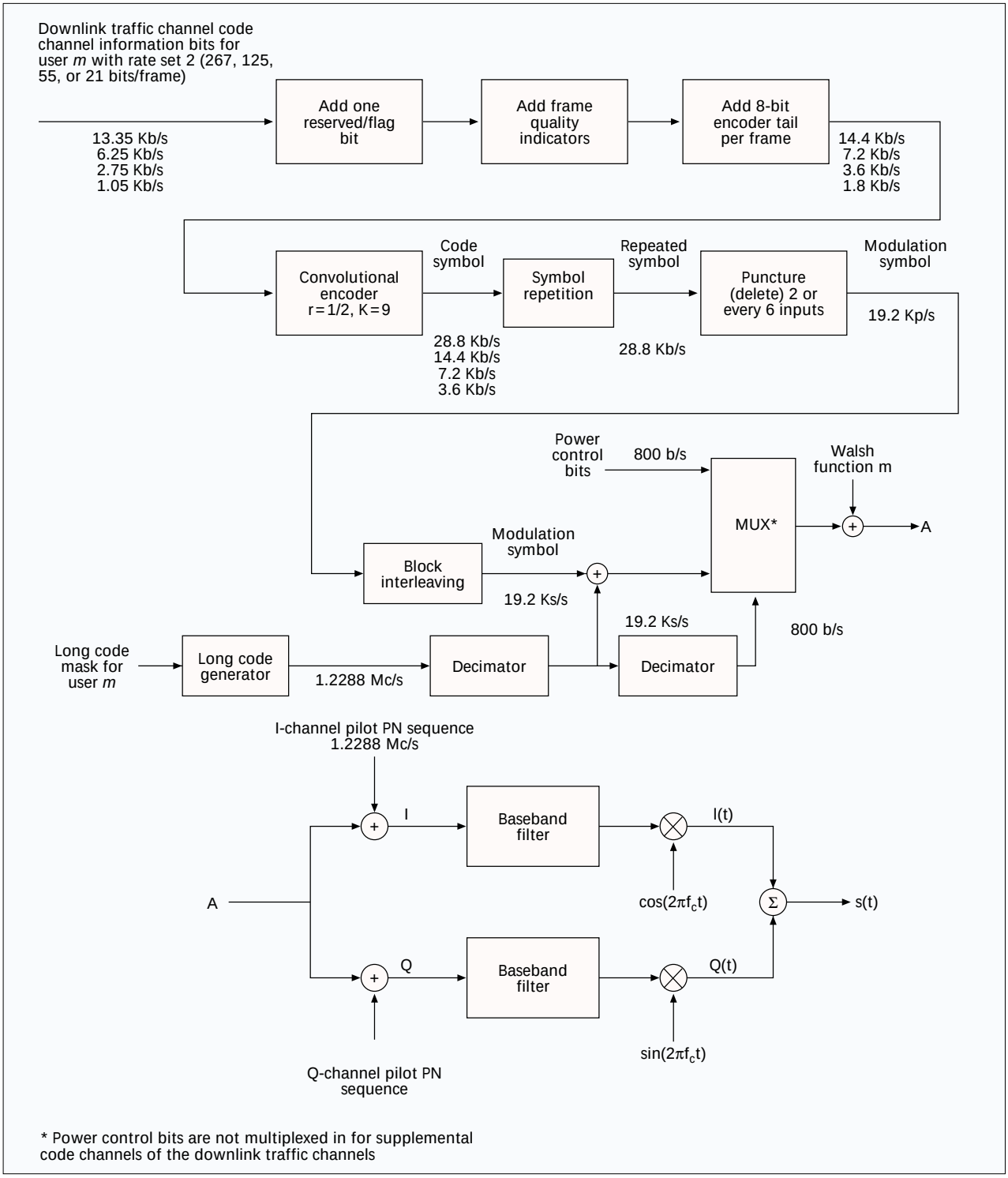

Figure 16b. *Downlink CDMA channel structure (reproduced with written permission from TIA).*

(i.e., the interference due to correlations between user codes). Examples of linear detectors are decorrelator and linear minimum mean square error (LMMSE) detectors. In interference cancellation multiple access interference is first estimated and then subtracted from the received signal. Parallel interference cancellation (PIC) and successive (serial) interference cancellation (SIC) are examples of interference cancellation.

For a more detailed treatment of multiuser detection and interference cancellation, refer to [1, 14–17].

IS-95 CDMA

In this section, we describe the features of the IS-95 air interface according to the new IS-95B standard, with a focus on the new downlink and uplink channel structure [18].[2] Main air interface parameters, downlink and uplink channel structures, power control principles, and speech coding are discussed. For a more detailed treatment of the IS-95A standard, refer to [11] and for a theoretical analysis of IS-95 air interface solutions, refer to [12].

The IS-95 air interface standard, after the first revision in 1995, was termed IS-95A [19]; it specifies the air interface for cellular, 800-Mhz frequency band. ANSI J-STD-008 specifies the PCS version (i.e., the air interface for 1900 MHz). It differs from IS-95A primarily in the frequency plan and in call processing related to subscriber station identity, such as paging and call origination. TSB74 specifies the Rate Set 2 (14.4 Kb/s) standard. IS-95B merges the IS-95A, ANSI J-STD-008 [20], and TSB74 standards, and, in addition, it specifies the high-speed data operation using up to eight parallel codes, resulting in a maximum bit rate of 115.2 Kb/s. In addition to these air interface specifications, the IS-97 [21] and IS-98 [22] standards specify the minimum performance specifications for the mobile and base station, respectively.

Table 2 lists the main parameters of the IS-95 air interface. Carrier spacing of the system is 1.25 MHz. Practical deployment has shown that 3 CDMA carriers can be fitted into 5 MHz bandwidth due to required guard bands. Network is synchronous within few microseconds. This facilitates use of the same long code sequence with different phase offsets as pilot sequences. However, an external reference signal such as GPS is needed.

[2] *In this article, the terms uplink and downlink are used instead of the forward and reverse link, which are used in the IS-95 standard.*

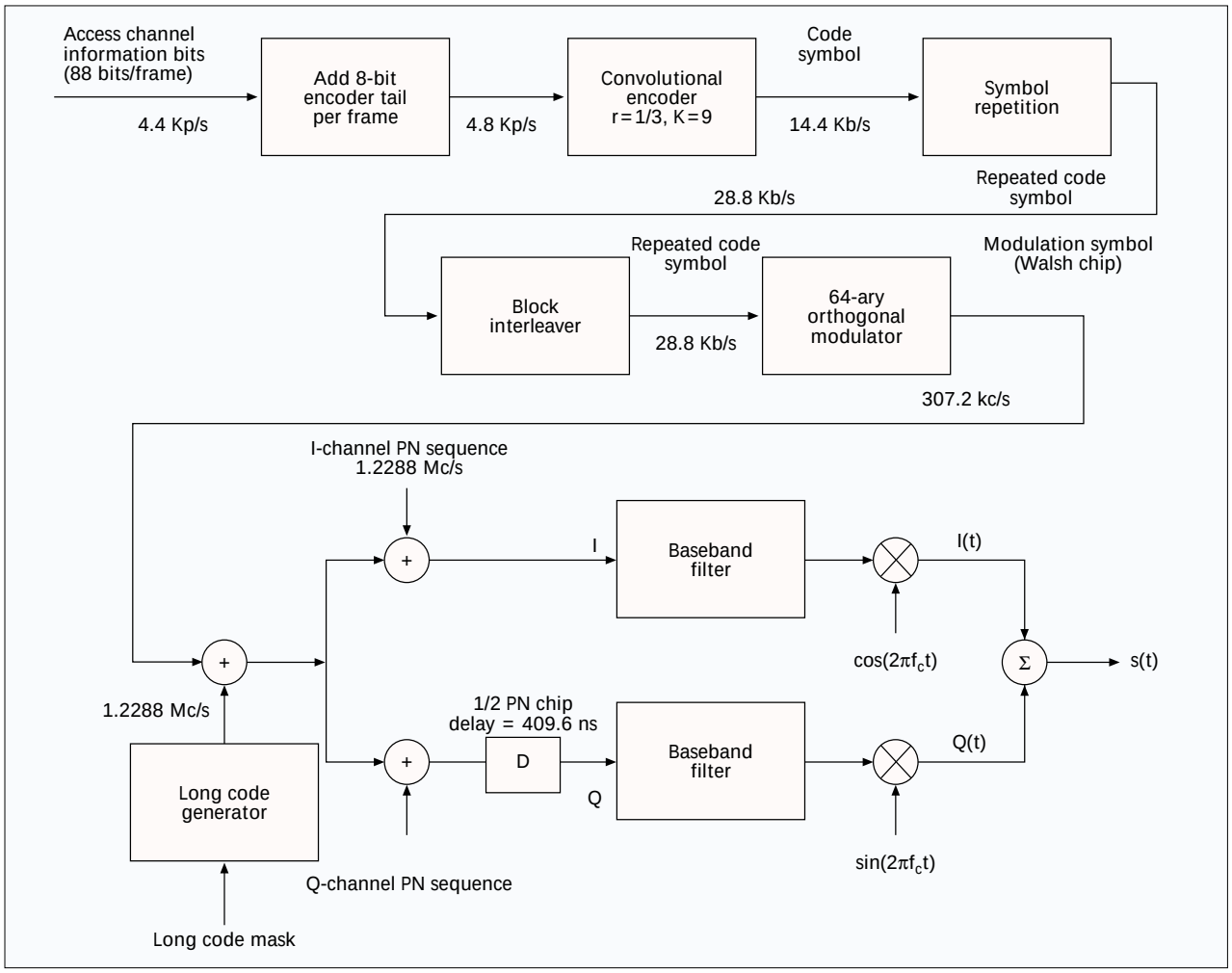

Figure 17. *Uplink CDMA channel structure for the access channel (reproduced with written permission from TIA.*

DOWNLINK CHANNEL STRUCTURE

Fig. 16 shows the downlink physical channel structure. The pilot channel, the paging channel, and the synchronization channel[3] are common control channels and traffic channels are dedicated channels. A common channel is a shared channel, and a dedicated channel is solely allocated for the use of a single user. Data to be transmitted on synchronization, paging, and traffic channels are first grouped into 20-ms frames, convolutionally encoded, repeated to adjust the data rate, and interleaved. Then the signal is spread with an orthogonal Walsh code at a rate of 1.2288 Mc/s, split into the I and Q channels, and, prior to baseband filtering, spread with long PN sequences at a rate of 1.2288 Mc/s.

A mobile station uses the pilot channel for coherent demodulation, acquisition, time delay tracking, power control measurements, and as an aid for the handover. In order to obtain a reliable phase reference for coherent demodulation, the pilot channel is transmitted with higher power than the traffic channels. Typically about 20 percent of the radiated power on the downlink is dedicated to the pilot signal. After obtaining phase and code synchronization, the mobile station acquires synchronization information (data rate of the paging channel, time of the base station's pilot PN sequence with respect to the system time) from the synchronization channel. Since the synchronization channel frame has the same length as the pilot sequence, acquisition of the synchronization channel takes place easily. The synchronization channel operates at a fixed rate of 1.2 Kb/s. The paging channel is used to page a mobile station. The paging channel has a fixed data rate of 9.6 or 4.8 Kb/s.

Each forward traffic channel contains one fundamental code channel and may contain one to seven supplemental code channels. The traffic channel has two different rate sets. The rate set 1 supports data rates of 9.6, 4.8, 2.4, and 1.2 Kb/s and the rate set 2 supports 14.4, 7.2, 3.6, and 1.8 Kb/s. Only the full rate (9.6 or 14.4 Kb/s) may be utilized on the supplemental code channels. The mobile station always supports the rate set 1 and it may support the rate set 2. To achieve equal power levels at the base station receiver, the base station measures the received signal and adjusts each mobile station's power levels accordingly. The 20-ms frame is divided into 16 power control groups with a duration of 1.25 ms. One power control bit is multiplexed in for the fundamental code channel for each power control group.

The transmitted data is encoded by a convolutional code with a constraint length of 9. The generator functions for this code are 753 (octal) and 561 (octal). For the synchronization channel, the paging channels, and rate set 1 on the traffic channel, a convolutional code with a rate of 1/2 is used. For the rate set 2, an effective code rate of 3/4 is achieved by puncturing two out of every six symbols after the symbol repetition.

Since the data rate on different channels varies, symbol repetition is used to achieve a fixed data rate prior to interleaving. For the synchronization channel, each convolutionally encoded symbol shall be repeated once (i.e., each symbol occurs two consecutive times). For the paging channel, each code symbol at the 4800-b/s rate shall be repeated once. The code symbol repetition rate on the forward traffic channels varies with data rate. Code symbols are not repeated for the 14.4- and 9.6-Kb/s data rates. Each code symbol at the 7.2- and 4.8-Kb/s data rates is repeated once, at the 3.6 and 2.4 Kb/s data rates three times, and at the 1.8- and 1.2-Kb/s data rates seven times.

In the downlink, three types of spreading codes are used. Walsh codes of length 64 at a fixed chip rate of 1.2288 Mc/s separate the physical channels. The Walsh function consisting of all zeros W0 (Walsh code number 0) is used for the pilot channel, W1-W7 are used for paging channels (unused paging channel codes can be used for traffic channels). The synchronization channel is W32, and traffic channels are W8 to W31 and W33 to W63. A pair of long M-sequences of length 16,767 (2^{15}–1) is used for quadrature spreading, one for the I channel and one for the Q channel. Quaternary spreading is used to obtain better interference averaging. Since the pilot channel Walsh function is all zeros, this pair of sequences also forms the pilot code. Different cells and sectors are distinguished with the different phase offsets of this code.

A long pseudo random sequence with a period of 2^{42}–1 is used for base band data scrambling (i.e., to encrypt the signal on the paging and traffic

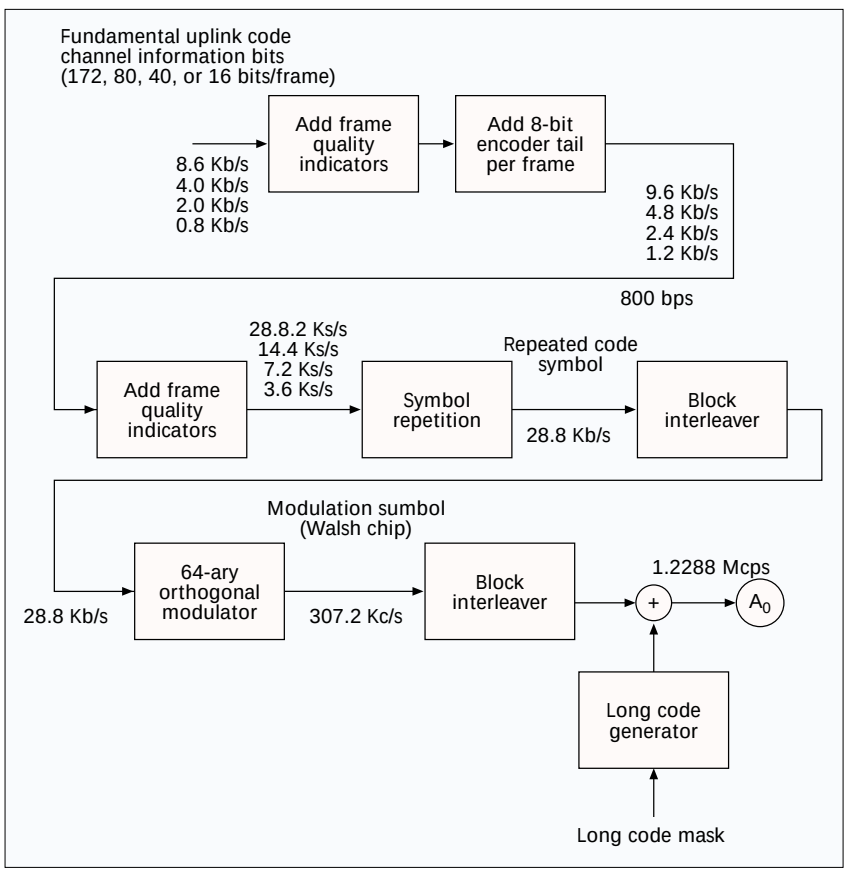

■ **Figure 18.** *Uplink CDMA channel structure for fundamental code channels with rate set 1 (reproduced with written permission from TIA).*

[3] *In the IS-95 standard the synchronization channel is actually termed "Sync Channel".*

channels). It is decimated from a 1.2288-Mc/s rate down to 19.2 Kb/s. The long pseudo noise sequence is the same used in the uplink for user separation, and it is generated by a modulo-2 inner product of a 42-bit mask and the 42-bit state vector of the sequence generator.

Uplink Channel Structure

As depicted in Figs. 17 to 20, the uplink has two physical channels: a traffic channel, which is a dedicated channel, and a common access channel. A traffic channel consists of a single fundamental code channel and zero through seven supplemental code channels. Similar to the downlink, traffic channels always support the rate set 1 data rates and may support the rate set 2 data rates. The supplemental code channel can only use the full rates (9.6 or 14.4 Kb/s). Data transmitted on the uplink channels are grouped into 20-ms frames, convolutionally encoded, block interleaved, and modulated by 64-ary orthogonal modulation. Then, prior to baseband filtering, the signal is spread with a long PN sequence at a rate of 1.2288 Mc/s, split into the I and Q channels, and spread with in-phase and quadrature spreading sequences.

The access channel is used by a mobile station to initiate a call, to respond to a paging channel message from the base station, and for a location update. Each access channel is associated with a downlink paging channel, and consequently there can be up to seven access channels. The access channel supports fixed data rate operation at 4.8 Kb/s.

The transmitted information is encoded using a convolutional code with constraint length 9 and the same generator polynomials as in the downlink. For the access channel and rate set 1 on the traffic channels, the convolutional code rate is 1/3. For rate set 2 on the traffic channels, a code rate of 1/2 is used. Similar to the downlink, code symbols output from the convolutional encoder are repeated before being interleaved when the data rate is lower than 9.6 Kb/s for rate set 1 and 14.4 Kb/s for rate set 2. However, the repeated symbols are not actually transmitted. They are masked out according to a masking pattern generated by the data burst randomizer to save transmission power. For the access channel, which has a fixed data rate of 4.8 Kb/s, each code symbol is repeated once. In contrast to the traffic channel, the repeated code symbols are transmitted.

The coded symbols are grouped into 6-symbol groups. These groups are then used to select one of 64 possible Walsh symbols (i.e., a 64-ary orthogonal modulation is carried out to obtain good perfor-

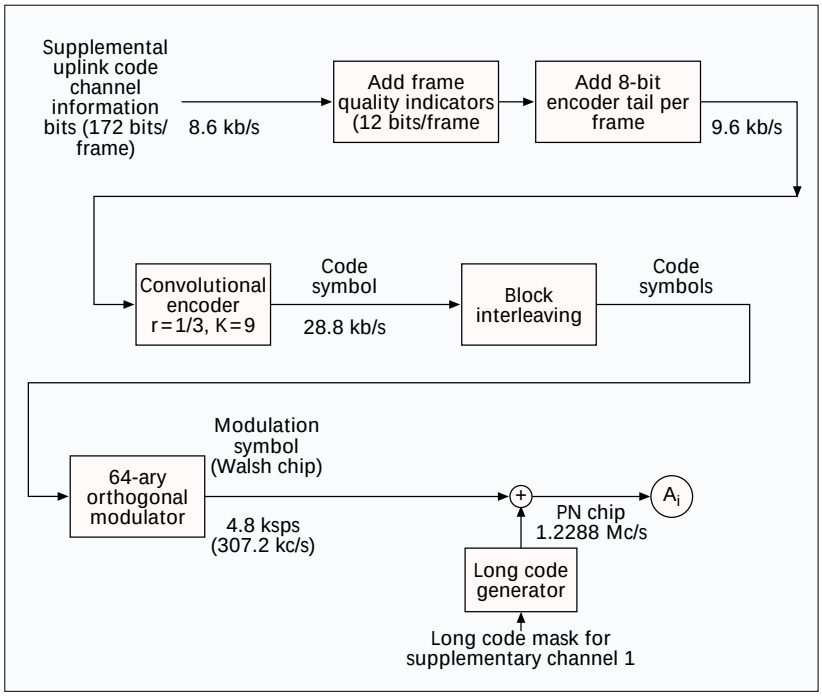

Figure 19. *Uplink CDMA channel structure for supplamental code channels with rate set 1 (reproduced with written permission from TIA).*

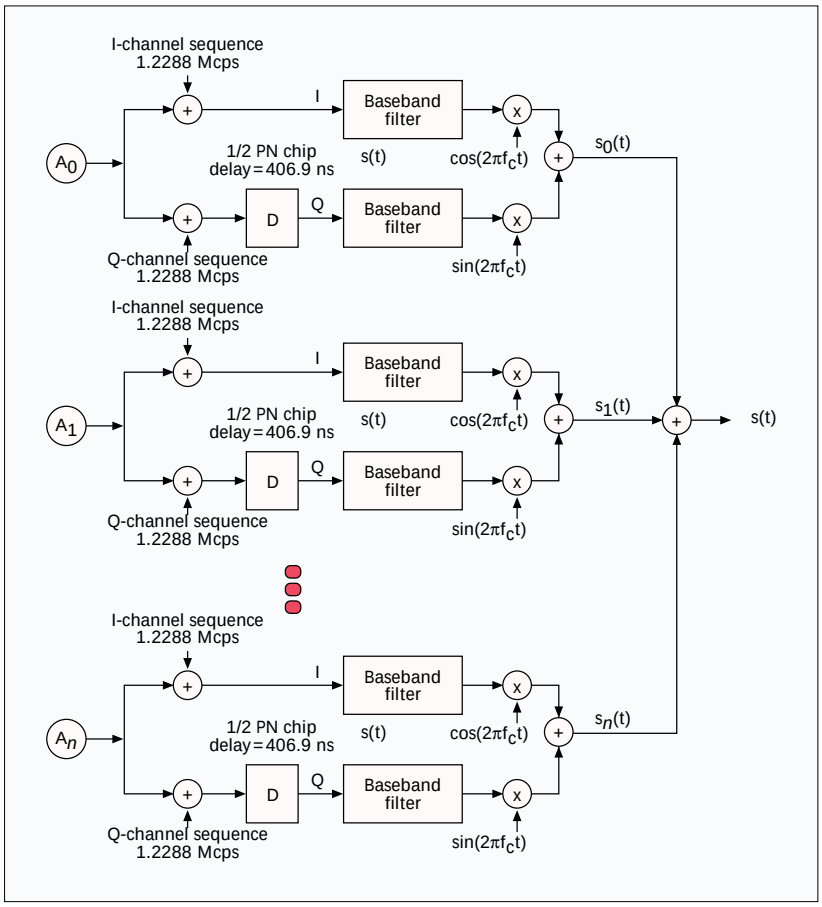

Figure 20. *Uplink traffic channel structure including fundamental code channel and multiple supplemental code channels with rate set 1 (reproduced with written permission from TIA).*

mance for noncoherent modulation). After the orthogonal modulation, the transmission rate is 307.2 Kb/s. The reason to use the non-coherent modulation is the difficulty in obtaining good phase reference for coherent demodulation in the uplink. It should be noted how the Walsh codes are used differently in the uplink and downlink. In the downlink, they were used for channelization, while in the uplink they are used for orthogonal modulation.

Each code channel in a traffic channel and each access channel are identified by a different phase of a pseudo-random M-sequence with a length of 2^{42}. The in-phase and quadrature spreading is performed by the same pair of M-sequences (length 2^{15}) as in the downlink (now augmented by one chip).

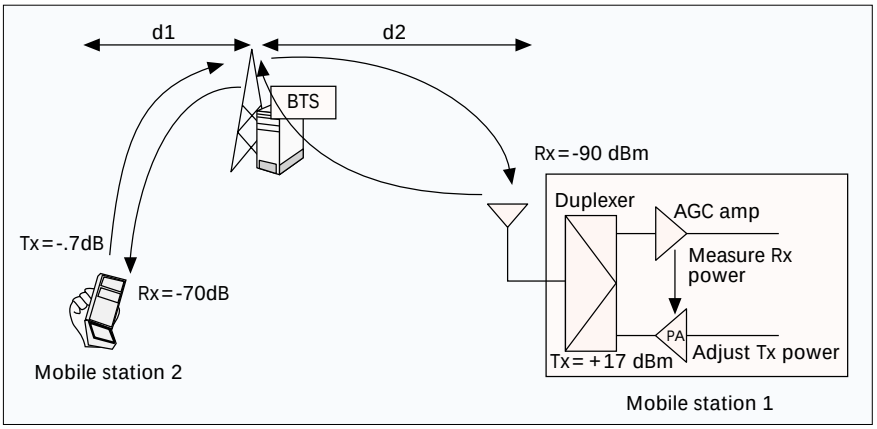

Figure 21. *Open loop power control principle*

Power Control

IS-95 has three different power control mechanisms. In the uplink, both open loop and fast closed loop power control are employed. In the downlink, a relatively slow power control loop controls the transmission power.

Open Loop Power Control — The open loop power control has two main functions: it adjusts the initial access channel transmission power of the mobile station and compensates large abrupt variations in the pathloss attenuation. The mobile station determines an estimate of the pathloss between the base station and mobile station by measuring the received signal strength at the mobile using an automatic gain control (AGC) circuitry, which gives a rough estimate of the propagation loss for each user. The smaller the received power, the larger the propagation loss, and vice-versa. The transmit power of the mobile station is determined from the equation:

$$\begin{aligned}&\text{mean output power (dBm)}\\&\quad = -\text{mean input power (dBm)}\\&\quad + \text{offset power} + \text{parameters}\end{aligned} \tag{2}$$

The offset power for the 800-MHz band mobiles (band class 0) is –73 and for the 1900-MHz band mobiles (band class 1) –76 [18]. The parameters are used to adjust the open-loop power control for different cell sizes and different cell effective radiated powers (ERP) and receiver sensitivities [23]. These parameters are initially transmitted on the synchronization channel.

The open loop power control principle is described in Fig. 21. Since the distance (d1) of mobile station 1 to the base station (BTS) is shorter than the distance of mobile station 2 (d2) to the BTS, the signal received by the mobile station 1 has a smaller propagation loss. Assume that the mean input power of the mobile station 1 is –70 dBm (100 pW)[4] and the mean input power of the mobile station 2 is –90 dBm (1 pW). For band class 0 mobiles with no correction parameters, the mobile station transmission power to achieve equal received powers at the base station can be calculated from (2.2) to be 17 dBm (50 mW) and –7 dBm (200 μW), respectively.

Closed Loop Power Control — Since the IS-95 uplink and downlink have a frequency separation of 20 MHz, their fading processes are not strongly correlated. Even though the average power is approximately the same, the short term power is different, and therefore, the open loop power control cannot compensate for the uplink fading. To account for the independence of the Rayleigh fading in the uplink and downlink, the base station also controls the mobile station transmission power. Fig. 22 illustrates the closed loop power control. The base station measures the received SIR[5] over a 1.25-ms period, equivalent to six modulation symbols, compares that to the target SIR, and decides whether the mobile station transmission power needs to be increased or decreased. The power control bits are transmitted on the

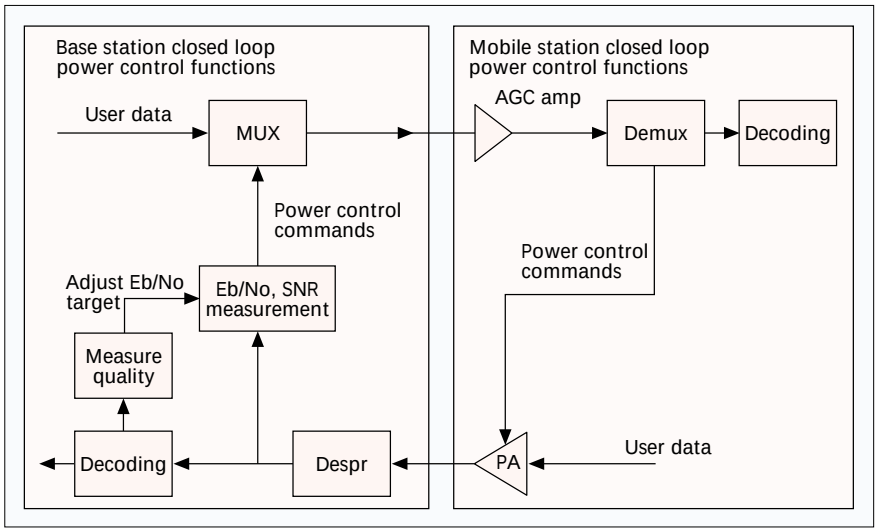

Figure 22. *Closed loop power control principle*

[4] *1dBm means 1dB over 1 mW. For example, –70 dBm is 70 dB (10 million times) less than 1 mW (i.e., 1E-12 W = 1 picoWatt).*

[5] *The IS-95 standard suggests that the received signal strength should be measured. However, in practice usually the SIR or the received bit energy to noise density (Eb/Io) are used, since they have direct impact on the bit error rate (BER).*

downlink fundamental code channel every 1.25 ms (i.e., with a transmission rate of 800 Hz) by puncturing the data symbols. The placement of a power control bit is randomized within the 1.25-ms power control group. The transmission occurs in the second power control group following the corresponding uplink traffic channel power control group in which the SIR was estimated.[6]

Since the power control commands are transmitted uncoded, their error ratio is fairly high, on the order of 5 percent. However, since the loop is of delta modulation type (i.e., power is adjusted continuously up or down) this is not critical. The mobile station extracts the power control bits commands and adjusts its transmission power accordingly. The adjustment step is a system parameter and can be 0.25, 0.5, or 1.0 dB. The dynamic range for the closed loop power control is ±24 dB. The composite dynamic range for open and closed loop power control is ±32 dB for mobile stations operating in band class 0, and ±40 dB for mobile stations operating in band class 1 [18]. The typical standard deviation of the power control error due to the closed loop is on the order of 1.1 to 1.5 dB [12].

The SIR required to produce a certain bit error rate varies according to radio environment and depends on the amount and type of multipath. Therefore, IS-95 employs an outer loop that adjusts the target SIR. The base station measures the signal quality (bit error rate), and based on that determines the target SIR. However, this outer loop will increase the power control error, resulting in a total standard deviation of 1.5 to 2.5 dB [12].

DOWNLINK SLOW POWER CONTROL — The base station controls its transmission power to a given mobile station according to the pathloss and interference situation. The main purpose of the slow downlink power control is to improve the performance of mobile stations at a cell edge where the signal is weak and the interfering base station signals are strong. The downlink power control mechanism is as follows. The base station periodically reduces the transmitted power to the mobile station. The mobile station measures the frame error ratio (FER). When the FER exceeds a predefined limit, typically 1 percent, the mobile station requests additional power from the base station. This adjustment occurs every 15 to 20 ms. The dynamic range of the downlink power control is only ±6 dB.

Both periodic and threshold reporting may be enabled simultaneously, either one of them may be enabled, or both forms of reporting may be disabled at any given time.

SPEECH CODECS AND DISCONTINUOUS TRANSMISSION (DTX)

IS-95 has three speech codecs, 8-Kb/s QCELP, 8-Kb/s EVRC, and 13 Kb/s. The higher rate codec was developed to provide better voice quality, but due to its higher bit rate it reduces the system capacity. Therefore, the enhanced variable rate codec (EVRC) operating at 8 Kb/s was developed. Speech codecs are four-rate code excited linear prediction codecs (CELP). The vocoder rates of the 8-Kb/s codecs are 1, 2, 4, and 8 Kb/s corresponding to channel rates of 1.2, 2.4, 4.8, and 9.6 Kb/s. The 13-Kb/s codec uses a 14.4 Kb/s channel rate. Since the system capacity is directly proportional to interference, reduction of the transmitted data rate results in better capacity. In IS-95, data rate reduction is implemented with discontinuous transmission (DTX), which is realized by gating the transmitter in pseudo-random fashion on and off. The drawback of this approach is that it creates pulsed interference.

[6] *For instance, if the signal is received on the reverse traffic channel in power control group number 5, and the corresponding power control bit is transmitted on the forward traffic channel during power control group number 5 + 2 = 7 [18].*

Multiple access method	TDMA/CDMA
Basic channel spacing	1.6 MHz
Carrier chip/bit rate	2.167 Mc/s
Time slot structure	8 slots/TDMA frame
Spreading	Orthogonal, 16 chips/symbol
Frame length	4.615 ms
Multirate concept	Multislot and multicode
FEC codes	Convolutional codes R=1/4 to 1 puncturing/repetition
Data modulation	QPSK/16QAM
Spreading modulation	Linearized GMSK
Pulse shaping	(Linearized GMSK)
Detection	Coherent, based on training sequence
Other diversity means	Frequency/time hopping per frame or slot

Source: [24]

Table 3. *TD-CDMA parameters.*

AIR INTERFACE TECHNOLOGIES FOR THIRD GENERATION

In the search for the most appropriate multiple access technology for third-generation wireless systems, a number of new multiple access schemes have been proposed (e.g, wideband CDMA schemes, UWC-136 TDMA-based scheme, and TD-CDMA). This section presents a detailed description of Wideband CDMA schemes and briefly reveiws a TD-CDMA scheme.

WIDEBAND CDMA

Wideband CDMA has a bandwidth of 5 MHz or more. The nominal bandwidth for all third-generation proposals is 5 MHz. There are several reasons for choosing this bandwidth. First, data rates of 144 and 384 Kb/s, the main targets of third-generation systems, are achievable within 5 MHz bandwidth with a reasonable capacity. Even a 2-Mb/s peak rate can be provided under limited conditions. Second, lack of spectrum calls for reasonably small minimum spectrum allocation, especially if the system has to be deployed within the existing frequency bands occupied already by second-generation systems. Third, the 5-MHz bandwidth can resolve (separate) more multipaths than narrower bandwidths, increasing diversity and thus improving performance. Larger bandwidths of 10, 15, and 20 MHz have been proposed to support higher data rates more effectively.

Several wideband CDMA proposals have been made for third-generation wireless systems. They can be characterized by the following new advanced properties:
- Provision of multirate services
- Packet data
- Complex spreading

- A coherent uplink using a user dedicated pilot
- Additional pilot channel in the downlink for beamforming
- Seamless interfrequency handover
- Fast power control in the downlink
- Optional multiuser detection

The third-generation air interface standardization for the schemes based on CDMA seems to focus on two main types of wideband CDMA: network asynchronous and synchronous. In network asynchronous schemes the base stations are not synchronized, while in network synchronous schemes the base stations are synchronized to each other within a few microseconds. As discussed, there are three network asynchronous CDMA proposals: WCDMA in ETSI and in ARIB, and TTA II in Korea have similar parameters. A network synchronous wideband CDMA scheme has been adopted by TR45.5 (cdma2000) and is being considered by Korea (TTA I). The section to follow describes the different wideband CDMA schemes in detail.

HYBRID CDMA/TDMA

In the ETSI air interface selection, the TDD solution was decided to be based on the TD-CDMA principles. In this section the original TD-CDMA scheme is presented. The role of CDMA in TD-CDMA is to multiplex the different channels within a timeslot. The spreading ratio is small, and, thus, if more than a few users are desired per frame, joint detection is needed to remove the intracell interference. Therefore, in a fully loaded system the spreading does not help against the interference from other cells. Also, the slow power control results in large variations in the received signal levels, and thus, joint detection is needed. Since the joint detection is a mandatory feature, it is more critical compared to wideband CDMA. However, if the number of users is small, the complexity of joint detection may not be excessive. The parameters of TD-CDMA are listed in Table 3.

WIDEBAND CDMA SCHEMES

This section presents the wideband CDMA air interface being developed by the standardization organizations in Europe, Japan, the United States, and Korea for third-generation communication systems. Fig. 23 illustrates the different schemes and their relations to standards bodies and to each other.

The third-generation air interface standardization for the schemes based on CDMA seems to focus on two main types of wideband CDMA: network asynchronous and network synchronous. In network asynchronous schemes the base stations are not synchronized, while in network synchronous schemes the base stations are synchronized to each other within a few microseconds. There are three network asynchronous CDMA proposals: WCDMA[7] in ETSI and ARIB, and TTA II[8] wideband CDMA in Korea have similar parameters [5]. In addition, T1P1 in the United States has joined the development of WCDMA. TR46.1 in the United States is also developing a wideband CDMA scheme, Wireless Multimedia & Messaging Services (WIMS), which has been recently harmonized with WCDMA. A network synchronous wideband CDMA scheme has been proposed by TR45.5 (cdma2000) and is being considered by Korea (TTA I[9]) [5]. All schemes are geared towards the IMT-2000 radio transmission technology selection process in ITU-R TG8/1. In addition to the above main wideband CDMA schemes, we introduce two more that are interesting from a wideband CDMA development perspective. These are CODIT and IS-665 W-CDMA.

Several attempts have been made to harmonize the different wideband CDMA approaches in search of a unified global air interface. However, due to the evolution of current systems and the strong commercial interests of their supporters, at the moment it seems that there will be at least two wideband CDMA standards for third-

Channel bandwidth	1.25, 5, 10, 20 MHz
Downlink RF channel structure	Direct spread
Chip rate	(1.024)[a]/4.096/8.192/16.384 Mc/s
Roll-off factor for chip shaping	0.22
Frame length	10 ms/20 ms (optional)
Spreading modulation	Balanced QPSK (downlink) Dual channel QPSK (uplink) Complex spreading circuit
Data modulation	QPSK (downlink) BPSK (uplink)
Coherent detection	User dedicated time multiplexed pilot (downlink and uplink); no common pilot in downlink
Channel multiplexing in uplink	Control and pilot channel time multiplexed I&Q multiplexing for data and control channel
Multirate	Variable spreading and multicode
Spreading factors	4–256
Power control	Open and fast closed loop (1.6 kHz)
Spreading (downlink)	Variable length orthogonal sequences for channel separation Gold sequences 2^{18} for cell and user separation (truncated cycle 10 ms)
Spreading (uplink)	Variable length orthogonal sequences for channel separation, Gold sequence 2^{41} for user separation (different time shifts in I and Q channel, truncated cycle 10 ms)
Handover	Soft handover Interfrequency handover

[a] In the ARIB WCDMA proposal a chip rate of 1.024 Mc/s has been specified, whereas in the ETSI WCDMA is has not.

Table 4. *Parameters of WCDMA.*

[7] *WCDMA is written without a dash when used for the ARIB/ETSI system. For other wideband CDMA proposals it can be written as W-CDMA.*

[8] *For the ITU RTT submission TTA II was renamed Global CDMA II.*

[9] *For the ITU RTT submission TTA I was renamed Global CDMA I.*

generation. It should be noted that several changes of parameters have occurred during the development of these proposals and the detailed concepts and standards will be developed during 1998 and 1999. In this section we try to reflect the latest information available in the literature. The ITU radio transmission technology descriptions of different wideband CDMA schemes can be found in [25–31] (available from the ITU Web site http://www.itu.int/imt).

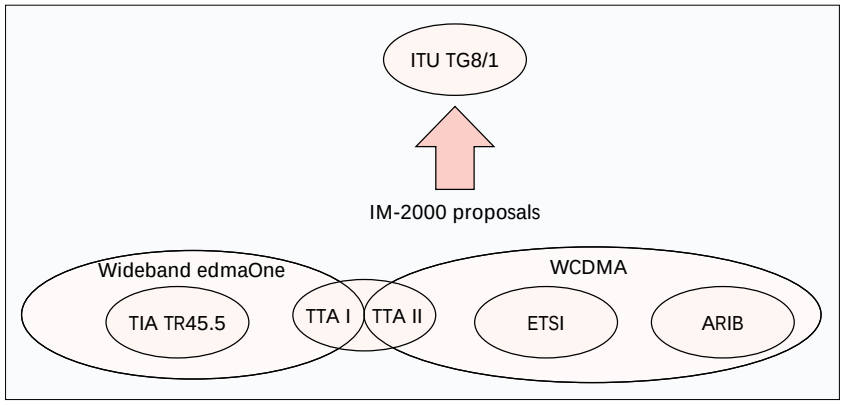

Figure 23. *Relationship between wideband CDMA schemes and standards bodies.*

We first describe the technical approaches for the network asynchronous and synchronous schemes and discuss the reasoning for 5-MHz bandwidth for third-generation wideband CDMA. WCDMA and cdma2000 are described in detail covering carrier spacing and deployment scenarios, physical channels, spreading, multirate schemes (variable data rates), packet data, and handover. The main technical parameters for the TTA I and TTA II schemes are presented and their differences compared to WCDMA and cdma2000 are highlighted. Finally, the CODIT and IS-665 schemes are briefly described.

Technical Approaches

In the following, we discuss the main technical approaches of WCDMA and cdma2000. These differences apply to the TTA I and TTA II as well. The main differences between WCDMA and cdma2000 systems are chip rate, downlink channel structure, and network synchronization. cdma2000 uses a chip rate of 3.6864 Mc/s for the 5-MHz band allocation with the direct spread downlink and a 1.2288-Mc/s chip rate for the multicarrier downlink [5]. WCDMA uses direct spread with a chip rate of 4.096 Mc/s. The multicarrier approach is motivated by a spectrum overlay of cdma2000 with existing IS-95 carriers. Similar to IS-95B, the spreading codes of cdma2000 are generated using different phase shifts of the same M-sequence. This is possible because of the synchronous network operation. Since WCDMA has an asynchronous network, different long codes rather than different phase shifts of the same code are used for the cell and user separation. The code structure further impacts how code synchronization, cell acquisition, and handover synchronization are performed.

The nominal bandwidth for all third-generation proposals is 5-MHz. There are several reasons for choosing this bandwidth. First, data rates of 144 and 384 Kb/s are achievable within 5-MHz bandwidth for third-generation systems and can be provided with reasonable capacity. Even 2-Mb/s peak rate can be provided under limited conditions. Second, lack of spectrum calls for reasonably small minimum spectrum allocation, especially if the system has to be deployed within the existing frequency bands already occupied by the second-generation systems. Third, the large 5-MHz bandwidth can resolve more multipaths than a narrower bandwidth, thus increasing diversity and improving performance. Larger bandwidths of 10, 15, and 20 MHz have been proposed to support highest data rates more effectively.

WCDMA

The WCDMA scheme has been developed as a joint effort between ETSI and ARIB during the second half of 1997 [32]. The ETSI WCDMA scheme has been developed from the FMA2 scheme in Europe [33–39] and the ARIB WCDMA from the Core-A scheme in Japan [40–45]. The uplink of the WCDMA scheme is based mainly on the FMA2 scheme, and the downlink on the Core-A scheme. In this section, we present the main technical features of the ARIB/ETSI WCDMA scheme. Table 4 lists the main parameters of WCDMA.

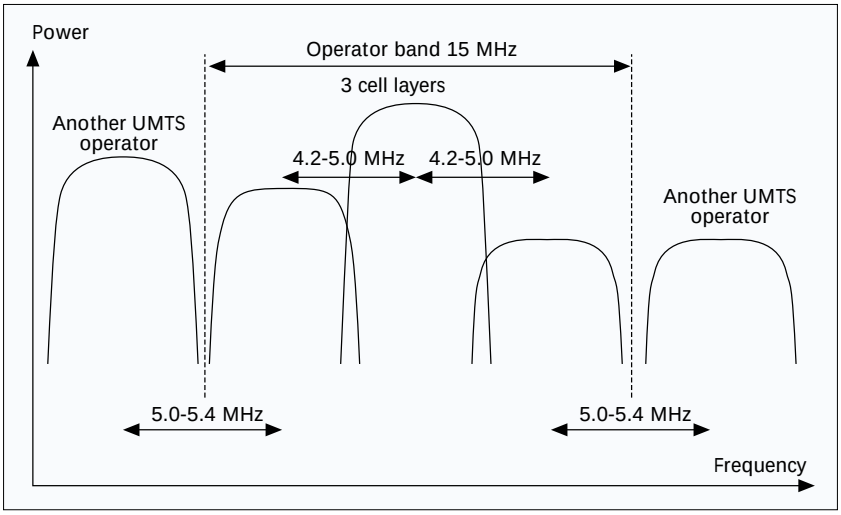

Figure 24. *Frequency utilization with WCDMA.*

Carrier Spacing and Deployment Scenarios — The carrier spacing has a raster of 200 kHz and can vary from 4.2 to 5.4 MHz. The different carrier spacings can be used to obtain suitable adjacent channel protections depending on the interference scenario. Fig. 24 shows an example for the operator bandwidth of 15 MHz with three cell layers. Larger carrier spacing can be applied between operators than within one operator's band in order to avoid inter-operator interference. Interfrequency measurements and handovers are supported by WCDMA to utilize several cell layers and carriers.

Logical Channels — WCDMA basically follows the ITU Recommendation M.1035 in the definition of logical

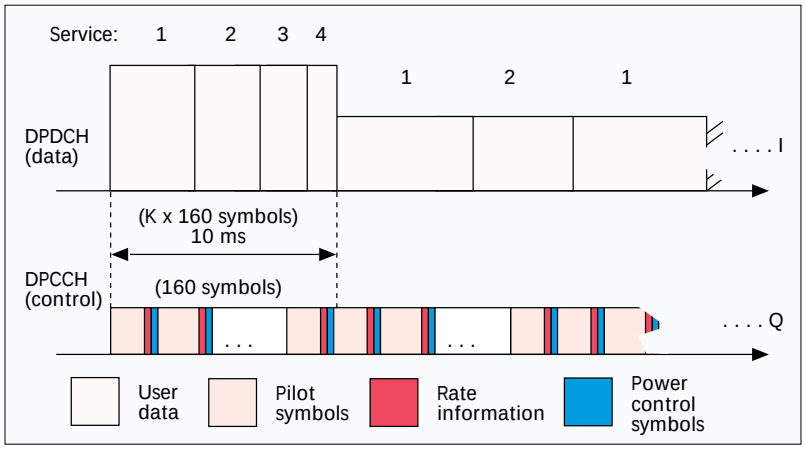

■ **Figure 25.** *WCDMA uplink multirate transmission.*

channels [46]. The following logical channels are defined for WCDMA. The three available common control channels are:

- Broadcast control channel (BCCH) carries system and cell specific information
- Paging channel (PCH) for messages to the mobiles in the paging area
- Forward access channel (FACH) for massages from the base station to the mobile in one cell.

In addition, there are two dedicated channels:

- Dedicated control channel (DCCH) covers the two dedicated control channel stand-alone dedicated channel (SDCCH) and associated control channel (ACCH)
- Dedicated traffic channel (DTCH) for point-to-point data transmission in the uplink and downlink

Physical Channels

Uplink Physical Channels. There are two dedicated channels and one common channel on the uplink. User data is transmitted on the dedicated physical data channel (DPDCH), and control information is transmitted on the dedicated physical data channel (DPDCH). The random access channel is a common access channel.

Fig. 25 shows the principle frame structure of the uplink DPDCH. Each DPDCH frame on a single code carries 160 x 2^k bits (16 x 2^k Kb/s), where k = 0,1, ..., 6, corresponding to a spreading factor of $256/2^k$ with the 4.096-Mc/s chip rate. Multiple parallel variable rate services (= dedicated logical traffic and control channels) can be time multiplexed within each DPDCH frame. The overall DPDCH bit rate is variable on a frame-by-frame basis.

In most cases, only one DPDCH is allocated per connection, and services are jointly interleaved sharing the same DPDCH. However, multiple DPDCHs can also be allocated (e.g. to avoid a too low spreading factor at high data rates).

The dedicated physical control channel (DPCCH) is needed to transmit pilot symbols for coherent reception, power control signaling bits, and rate information for rate detection. Two basic solutions for multiplexing physical control and data channels are time multiplexing and code multiplexing. A combined IQ and code multiplexing solution (dual-channel QPSK) is used in WCDMA uplink to avoid electromagnetic compatibility (EMC) problems with discontinuous transmission (DTX).

The major drawback of the time multiplexed control channel are the EMC problems that arise when DTX is used for user data. One example of a DTX service is speech. During silent periods no information bits need to be transmitted, which results in pulsed transmission as control data must be transmitted in any case. This is illustrated in Fig. 26. Because the rate of transmission of pilot and power control symbols is on the order of 1 to 2 kHz, they cause severe EMC problems to both external equipment and terminal interiors. This EMC problem is more difficult in the uplink direction since mobile stations can be close to other electrical equipment, like hearing aids.

The IQ/code multiplexed control channel is shown in Fig. 27. Now, since pilot and power control are on a separate channel, no pulse-like transmission takes place. Interference to other users and cellular capacity remains the same as in the time multiplexed solution. In addition, link-level performance is the same in both schemes if the energy allocated to the pilot and the power control bits is the same.

The structure of the random access burst is shown in Fig. 28. The random access burst consists of two parts, a preamble part of length 16 x 256 chips (1 ms) and a data part of variable length.

The WCDMA random access scheme is based on a slotted ALOHA technique with the random access burst structure shown in Fig. 28. Before the transmission of a random access request, the mobile terminal should carry out the following tasks:

- Achieve chip, slot, and frame synchronization to the target base station from the synchronization channel (SCH) and obtain information about the downlink scrambling code also from the SCH
- Retrieve information from BCCH about the random access code(s) used in the target cell/sector
- Estimate the downlink path loss, which is used together with a signal strength target to calculate the required transmit power of the random access request

It is possible to transmit a short packet together with a random access burst without settting up a scheduled packet channel. No separate access channel is used for packet traffic related random access, but all traffic shares the same random access channel. More than one random access channel can be used if the random access capacity requires such an arrangement. The performance of the selected solution is presented in [47].

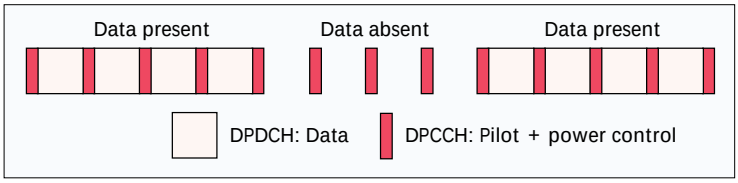

■ **Figure 26.** *Illustration of pulsed transmission with time multiplexed control channel.*

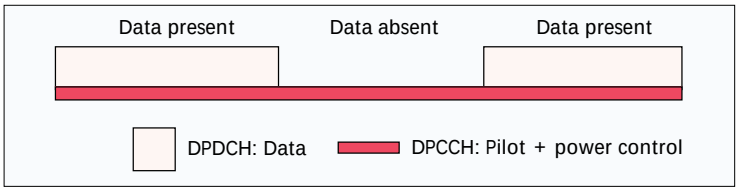

■ **Figure 27.** *Illustration of parallel transmission of DPDCH and DPCCH channel when data is present/adsent.*

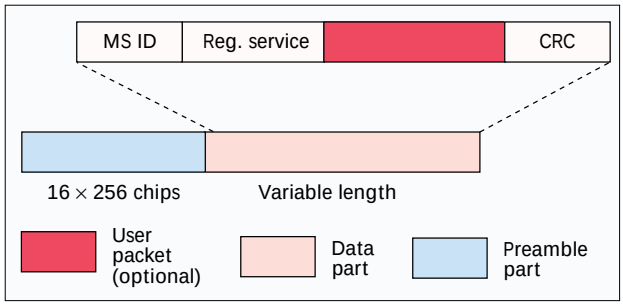

■ **Figure 28.** *Structure of WCDMA random access burst.*

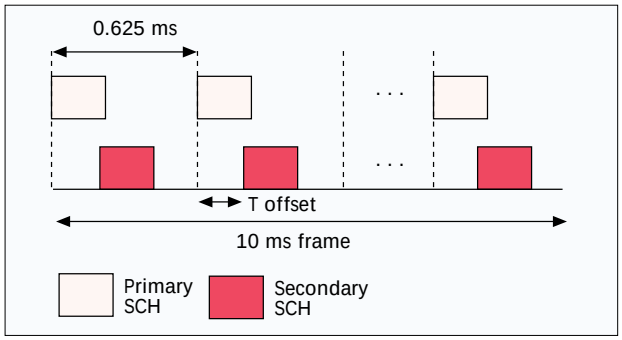

■ **Figure 29.** *Structure of the synchronization channel (SCH).*

Downlink Physical Channels. In the downlink, there are three common physical channels. The primary and secondary common control physical channels (CCPCH) carry the downlink common control logical channels (BCCH, PCH, and FACH); the SCH provides timing information and is used for handover measurements by the mobile station.

The dedicated channels (DPDCH and DPCCH) are time multiplexed. The EMC problem caused by discontinuous transmission is not considered difficult in downlink since (1) there are signals to several users transmitted in parallel and at the same time and (2) base stations are not so close to other electrical equipment, like hearing aids.

In the downlink, time multiplexed pilot symbols are used for coherent detection. Since the pilot symbols are connection dedicated, they can be used for channel estimation with adaptive antennas as well. Furthermore, the connection dedicated pilot symbols can be used to support downlink fast power control. In addition, a common pilot time multiplexed in the BCCH channel can be used for coherent detection.

The primary CCPCH carries the BCCH channel and a time multiplexed common pilot channel. It is of fixed rate and is mapped to the DPDCH in the same way as dedicated traffic channels. The primary CCPCH is allocated the same channelization code in all cells. A mobile terminal can thus always find the BCCH, once the base station's unique scrambling code has been detected during the initial cell search.

The secondary physical channel for common control carries the PCH and FACH in time multiplex within the super frame structure. The rate of the secondary CCPCH may be different for different cells and is set to provide the required capacity for PCH and FACH in each specific environment. The channelization code of the secondary CCPCH is transmitted on the primary CCPCH.

The SCH consists of two subchannels, the primary and secondary SCHs. Fig. 29 illustrates the structure of the SCH. The SCH applies short code masking to minimize the acquisition time of the long code [48]. The SCH is masked with two short codes (primary and secondary SCH). The unmodulated primary SCH is used to acquire the timing for the secondary SCH. The modulated secondary SCH code carries information about the long code group to which the long code of the BS belongs. In this way, the search of long codes can be limited to a subset of all the codes.

The primary SCH consists of an unmodulated code of length 256 chips, which is transmitted once every slot. The primary synchronization code is the same for every base station in the system and is transmitted time aligned with the slot boundary, as illustrated in Fig. 29.

The secondary SCH consists of one modulated code of length 256 chips, which is transmitted in parallel with the primary SCH. The secondary synchronization code is chosen from a set of 16 different codes depending on to which of the 32 different code groups the base station downlink scrambling code csc belongs.

The secondary SCH is modulated with a binary sequence of length 16 bits, which is repeated for

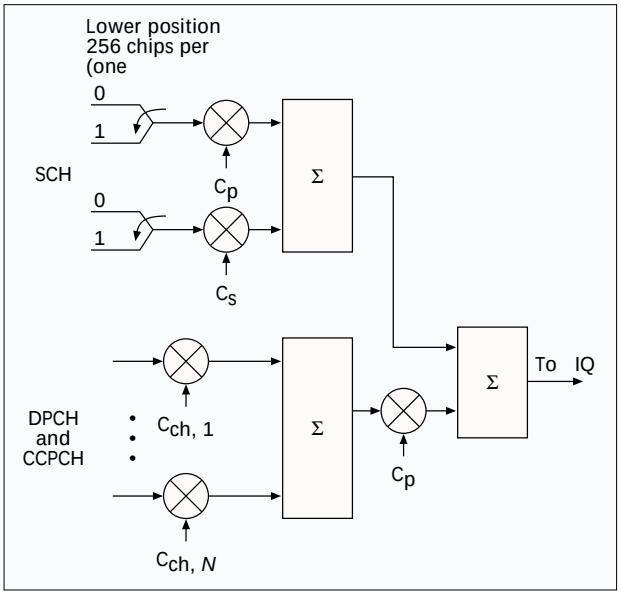

■ **Figure 30.** *Multiplexing of the SCH (s_p = primary spreading code; s_c = secondary spreading code; c_{ch} = orthogonal code; c_{sc} = long scrambling code).*

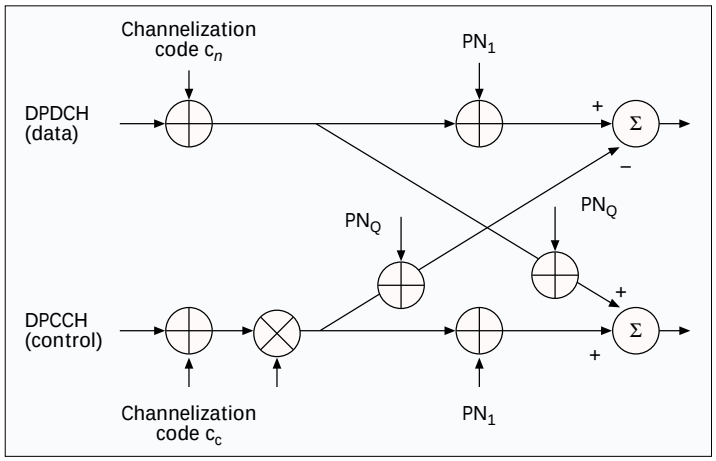

■ **Figure 31.** *IQ/code multiplexing with complex spreading circuit.*

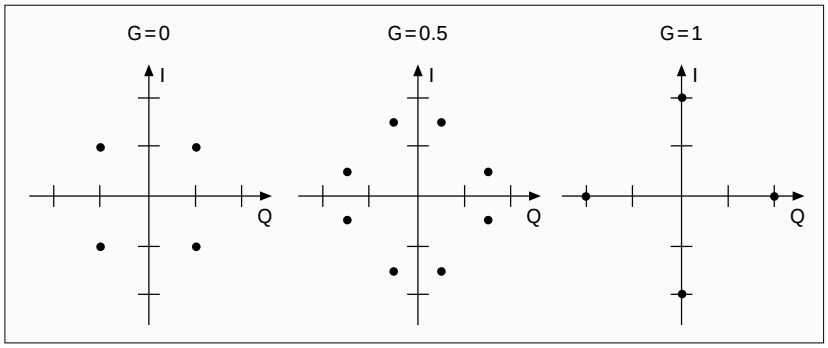

■ **Figure 32.** *Signal constellation for IQ/code multiplexed control channel with complex spreading. G is the power difference between DPCCH and DPDCH.*

each frame. The modulation sequence, which is the same for all base stations, has good cyclic autocorrelation properties.

The multiplexing of the SCH with the other downlink physical channels (DPDCH/DPCCH and CCPCH) is illustrated in Fig. 30. The SCH is transmitted only intermittently (one codeword per slot), and it is multiplexed with the DPDCH/DPCCH and CCPCH after long code scrambling is applied on DPDCH/DPCCH and CCPCH. Consequently, the SCH is nonorthogonal to the other downlink physical channels.

SPREADING — The WCDMA scheme employs long spreading codes. Different spreading codes are used for cell separation in the downlink and user separation in the uplink. In the downlink, Gold codes of length 2^{18} are used, but they are truncated to form a cycle of a 10-ms frame. The total number of available scrambling codes is 512, divided into 32 code groups with 16 codes in each group to facilitate a fast cell search procedure. In the uplink, either short or long spreading (scrambling codes) are used. The short codes are used to ease the implementation of advanced multiuser receiver techniques; otherwise long spreading codes can be used. Short codes are VL-Kasami codes of length 256 and lond codes are Gold sequences of length 2^{41}, but the latter are truncated to form a cycle of a 10-ms frame.

For channelization, orthogonal codes are used. Orthogonality between the different spreading factors can be achieved by the tree-structured orthogonal codes.

IQ/code multiplexing leads to parallel transmission of two channels, and therefore, attention must be paid to modulated signal constellation and related peak-to-average power ratio (crest factor). By using the complex spreading circuit shown in Fig. 31, the transmitter power amplifier efficiency remains the same as for QPSK transmission in general.

Moreover, the efficiency remains constant irrespective of the power difference G between DPDCH and DPCCH. This can be explained with Fig. 32, which shows the signal constellation for IQ/code multiplexed control channel with complex spreading. In the middle constellation with $G = 0.5$ all eight constellation points are at the same distance from the origin. The same is true for all values of G. Thus, signal envelope variations are very similar to the QPSK transmission for all values of G. The IQ/code multiplexing solution with complex scrambling results in power amplifier output backoff requirements that remain constant as a function of power difference. Furthermore, the achieved output backoff is the same as for one QPSK signal.

MULTIRATE — Multiple services of the same connection are multiplexed on one DPDCH. Multiplexing may take place either before or after the inner or outer coding, as illustrated in Fig. 33. After service multiplexing and channel coding, the multiservice data stream is mapped to one DPDCH. If the total rate exceeds the upper limit for single code transmission, several DPDCHs can be allocated.

A second alternative for service multiplexing would be to map parallel services to different DPDCHs in a multicode fashion with separate channel coding/interleaving. With this alternative scheme, the power, and consequently the quality of each service, can be separately and independently controlled. The disadvantage is the need for multicode transmission, which will have an impact on mobile station complexity. Multicode transmission sets higher requirements for the power amplifier linearity in transmission, and more correlators are needed in reception.

For BER = 10^3 services, convolutional coding of 1/3 is used. For high bit rates a code rate of 1/2 can be applied. For higher quality service classes outer Reed-Solomon coding is used to reach the 10^6 BER level. Retransmissions can be utilized to guarantee service quality for non real-time packet data services.

After channel coding and service multiplexing, the total bit rate can be almost arbitrary. The rate matching adapts this rate to the limited set of possible bit rates of a DPDCH. Repetition or puncturing is used to match the coded bit stream to the channel gross rate. The rate matching for uplink and downlink are introduced below.

For the uplink, rate matching to the closest uplink DPDCH bit rate is always based on unequal repetition (a subset of the bits repeated) or code puncturing. In general, code puncturing is chosen for bit rates less than (20 percent above the closest lower DPDCH bit rate. For all other cases, unequal repetition is performed to the closest higher DPDCH bit rate. The repe-

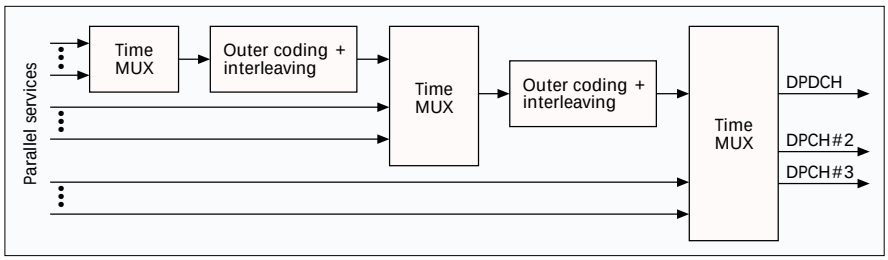

■ **Figure 33.** *Service multiplexing in WCDMA.*

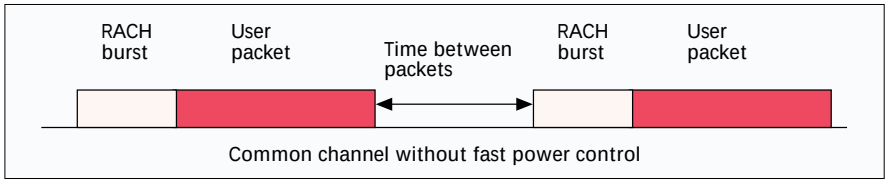

■ **Figure 34.** *Packet transmission on the common channel.*

tition/puncturing patterns follow a regular predefined rule (i.e., only the amount of repetition/puncturing needs to be agreed on). The correct repetition/puncturing pattern can then be directly derived by both the transmitter and receiver side.

For the downlink, rate matching to the closest DPDCH bit rate, using either unequal repetition or code puncturing, is only made for the highest rate (after channel coding and service multiplexing) of a variable rate connection and for fixed-rate connections. For lower rates of a variable rate connection, the same repetition/puncturing pattern as for the highest rate is used, and the remaining rate matching is based on discontinuous transmission where only a part of each slot is used for transmission. This approach is used in order to simplify the implementation of blind rate detection in the mobile station.

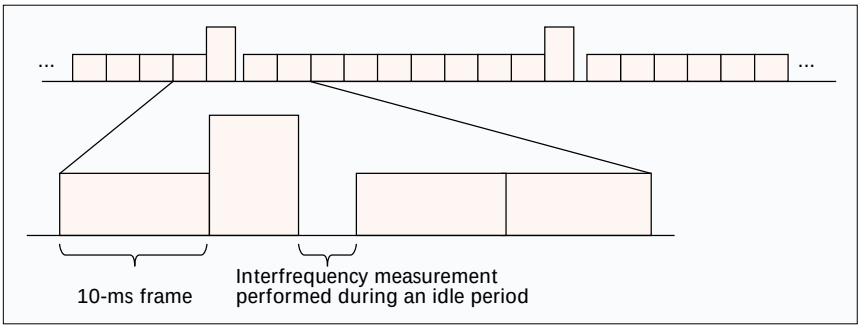

Figure 35. *Slotted mode structure.*

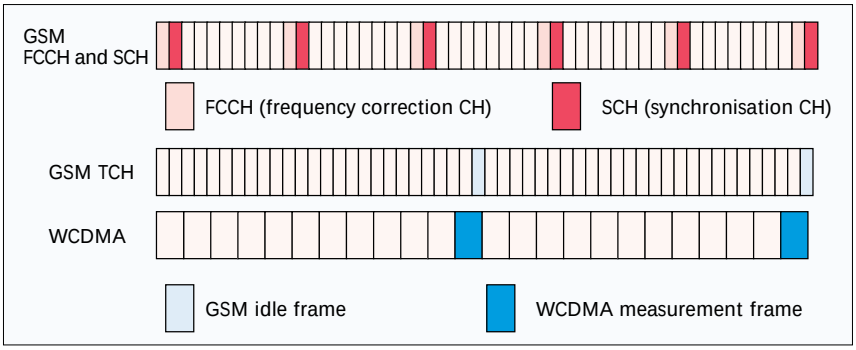

Figure 36. *Measurements timing relation between WCDMA and GSM frame structure.*

PACKET DATA — WCDMA has two different types of packet data transmission possibilities. Short data packets can be appended directly to a random access burst. This method, called *common channel packet transmission*, is used for short infrequent packets, where the link maintenance needed for a dedicated channel would lead to an unacceptable overhead.

When using the uplink common channel, a packet is appended directly to a random access burst. Common channel packet transmission is typically used for short, infrequent packets, where the link maintenance needed for a dedicated channel would lead to unacceptable overhead. Also, the delay associated with a transfer to a dedicated channel is avoided. Note that for common channel packet transmission only open loop power control is in operation. Common channel packet transmission should therefore be limited to short packets that only use a limited capacity. Figure 34 illustrates packet transmission on a common channel.

Larger or more frequent packets are transmitted on a dedicated channel. A large single packet is transmitted using a *single-packet scheme* where the dedicated channel is released immediately after the packet has been transmitted. In a *multi-packet scheme* the dedicated channel is maintained by transmitting power control and synchronization information between subsequent packets.

HANDOVER — Base stations in WCDMA need not be synchronized, and therefore, no external source of synchronization, like GPS, is needed for the base stations. Asynchronous base stations must be considered when designing soft handover algorithms and when implementing position location services. These two aspects are considered in this section.

Before entering soft handover, the mobile station measures observed timing differences of the downlink SCHs from the two base stations. The structure of SCH is presented in a section to follow, "Physical Channels." The mobile station reports the timing differences back to the serving base station. The timing of a new downlink soft handover connection is adjusted with a resolution of one symbol (i.e., the dedicated downlink signals from the two base stations are synchronized with an accuracy of one symbol). That enables the mobile RAKE receiver to collect the macro diversity energy from the two base stations. Timing adjustments of dedicated downlink channels can be carried out with a resolution of one symbol without losing orthogonality of downlink codes.

Interfrequency Handovers. Interfrequency handovers are needed for utilization of hierarchical cell structures; macro, micro, and indoor cells. Several carriers and interfrequency handovers may also be used for taking care of high capacity needs in hot spots. Interfrequency handovers will be needed also for handovers to second-generation systems, like GSM or IS-95. In order to complete interfrequency handovers, an efficient method is needed for making measurements on other frequencies while still having the connection running on the current frequency. Two methods are considered for interfrequency measurements in WCDMA:

- Dual receiver
- Slotted mode

The dual receiver approach is considered suitable especially if the mobile terminal employs antenna diversity. During the interfrequency measurements, one receiver branch is switched to another frequency for measurements, while the other keeps receiving from the current frequency. The loss of diversity gain during measurements needs to be compensated for with higher downlink transmission power. The advantage of the dual receiver approach is that there is no break in the current frequency connection. Fast closed loop power loop is running all the time.

The slotted mode approach depicted in Fig. 35 is considered attractive for the mobile station without antenna diversity. The information normally transmitted during a 10-ms frame is compressed time either by code puncturing or by changing the FEC rate.

Inter-operability Between GSM and WCDMA. The handover between the WCDMA system and the GSM system, offering worldwide coverage already today, has been one of the main design criteria taken into account in the WCDMA frame timing definition. The GSM compatible multiframe

structure, with a superframe multiple of 120 ms, allows similar timing for intersystem measurements as in the GSM system itself. Apparently the needed measurement interval does not need to be as frequent as for GSM terminal operating in a GSM system, as intersystem handover is less critical from intra-system interference point of view. Rather, the compatibility in timing is important that when operating in WCDMA mode, a multimode terminal is able to catch the desired information from the synchronization bursts in the synchronization frame on a GSM carrier with the aid of frequency correction burst. This way the relative timing between a GSM and WCDMA carriers is maintained similar to the timing between two asynchronous GSM carriers. The timing relation between WCDMA channels and GSM channels is indicated in Fig. 36, where the GSM traffic channel and WCDMA channels use similar 120 ms multiframe structure. The GSM frequency correction channel (FCCH) and GSM synchronization channel (SCH) use one slot out of the eight GSM slots in the indicated frames with the FCCH frame with one time slot for FCCH always preceding the SCH frame with one time slot for SCH as indicated in the Fig. 36. Further details on GSM common channel structures can be found in [49].

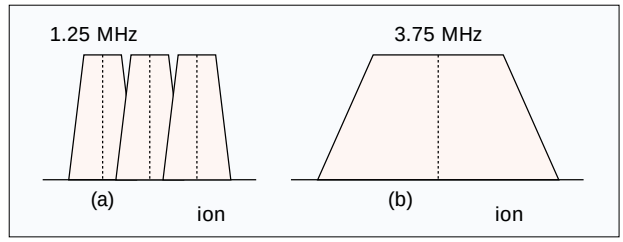

■ **Figure 37.** *Illustration of (a) multicarrier and (b) direct spread downlink.*

A WCDMA terminal can do the measurements either by requesting the measurement intervals in a form of slotted mode where there are breaks in the downlink transmission or then it can perform the measurements independently with a suitable measurement pattern. With independent measurements the dual receiver approach is used instead of the slotted mode since the GSM receiver branch can operate independently of the WCDMA receiver branch.

For smooth interoperation between the systems, information needs to be exchanged between the systems, in order to allow WCDMA base station to notify the terminal of the existing GSM frequencies in the area. In addition, more integrated operation is needed for the actual handover where the current service is maintained, taking naturally into account the lower data rate capabilities in GSM when compared to UMTS maximum data rates reaching all the way to 2 Mb/s.

The GSM system is likewise expected to be able to indicate also the WCDMA spreading codes in the area to make the cell identification simpler and after that the existing measurement practises in GSM can be used for measuring the WCDMA when operating in GSM mode.

As the WCDMA does not rely on any superframe structure as with GSM to find out synchronization, the terminal operating in GSM mode is able to obtain the WCDMA frame synchronization once the WCDMA base station scrambling code timing is acquired. The base station scrambling code has 10-ms period and its frame timing is synchronized to WCDMA common channels.

Channel bandwidth	1.25, 5, 10, 15, 20 MHz
Downlink RF channel structure	Direct spread or multicarrier
Chip rate	1.2288/3.6864/7.3728/11.0593/14.7456 Mc/s for direct spread *n* x 1.2288 Mc/s (*n* = 1, 3, 6, 9, 12) for multicarrier
Roll-off factor	Similar to IS-95 (see [50])
Frame length	20 ms for data and control/5 ms for control information on the fundamental and dedicated control channel
Spreading modulation	Balanced QPSK (downlink) Dual-channel QPSK (uplink) Complex spreading circuit
Data modulation	QPSK (downlink) BPSK (uplink)
Coherent detection	Pilot time multiplexed with PC and EIB (uplink) Common continuous pilot channel and auxiliary pilot (downlink)
Channel multiplexing in uplink	Control, pilot, fundamental, and supplemental code multiplexed I&Q multiplexing for data and control channels
Multirate	Variable spreading and multicode
Spreading factors	4–256
Power control	Open loop and fast closed loop (800 Hz, higher rates under study)
Spreading (downlink)	Variable length Walsh sequences for channel separation, M-sequence 2^{15} (same sequence with time shift utilized in different cells, different sequence in I&Q channel)
Spreading (uplink)	Variable length orthogonal sequences for channel separation, M-sequence 2^{15} (same sequence for all users, different sequences in I&Q channels); M-sequence 2^{41}–1 for user separation (different time shifts for different users)
Handover	Soft handover Interfrequency handover

■ **Table 5.** *cdma2000 parameter summary.*

CDMA2000

Within standardization committee TIA TR45.5, the subcommittee TR45.5.4 was responsible for the selection of the basic cdma2000 concept. Like for all the other wideband CDMA schemes, the goal has been to provide data rates that meet the IMT-2000 performance requirements of at least 144 Kb/s in a vehicular environment, 384 Kb/s in a pedestrian environment, and 2048 Kb/s in an indoor office environment. The main focus of standardization has been providing

144 Kb/s and 384 Kb/s with approximately 5-MHz bandwidth. The main parameters of cdma2000 are listed in Table 5.

BANDWIDTH AND DEPLOYMENT SCENARIOS — In the following we highlight the channel structures of cdma2000. Currently there exist two main alternatives for the downlink: multicarrier and direct spread options. The multicarrier approach maintains orthogonality between the cdma2000 and IS-95 carriers [51]. In the downlink this is more important because the power control cannot balance the interfering powers between different layers, as it can in the uplink. As illustrated in Fig. 37, transmission on the multicarrier downlink (nominal 5-MHz band) is achieved by using three consecutive IS-95B carriers[10] where each carrier has a chip rate of 1.2288 Mc/s. For the direct spread option, transmission on the downlink is achieved by using a nominal chip rate of 3.6864 Mc/s. The multicarrier approach has been proposed since it might provide easier an overlay with the existing IS-95 systems. This is because without multipath it retains orthogonality with existing IS-95 carriers. However, in certain conditions the spectrum efficiency of multicarrier is 5 to 10 percent worse than direct spread since it can resolve a smaller number of multipath components [51]. Regardless of the downlink solution, if an operator has a 5-MHz allocation and if at least 1.25 MHz is already in use, the implementation of either the multicarrier or the direct spread overlay could be challenging [51].

The starting point for bandwidth design of cdma2000 has been the PCS spectrum allocation in the United States. The PCS spectrum is allocated in 5-MHz blocks (D, E, and F blocks) and 15-MHz blocks (A, B, and C blocks). One 3.6864-Mc/s carrier can be deployed within 5-MHz spectrum allocation including guardbands. For the 15-MHz block, three 3.6864 Mc/s carriers plus two 1.2288-Mc/s carriers can be deployed. For a 10-MHz block two 3.6864-Mc/s carriers plus one 1.2288-Mc/s carrier can be deployed [52].

LOGICAL CHANNELS — At the time of writing, the logical channels for cdma2000 were still under development. The reader is referred to the latest standards documents in TIA [29].

PHYSICAL CHANNELS

Uplink Physical Channels. In the uplink, there are four different dedicated channels. The fundamental and supplemental channels carry user data. A dedicated control channel, with a frame length 5 or 20 ms, carries control information such as measurement data, and a pilot channel is used as a reference signal for coherent detection. The pilot channel also carries time multiplexed power control symbols. Figure 38 illustrates the different uplink dedicated channels separated by Walsh codes.

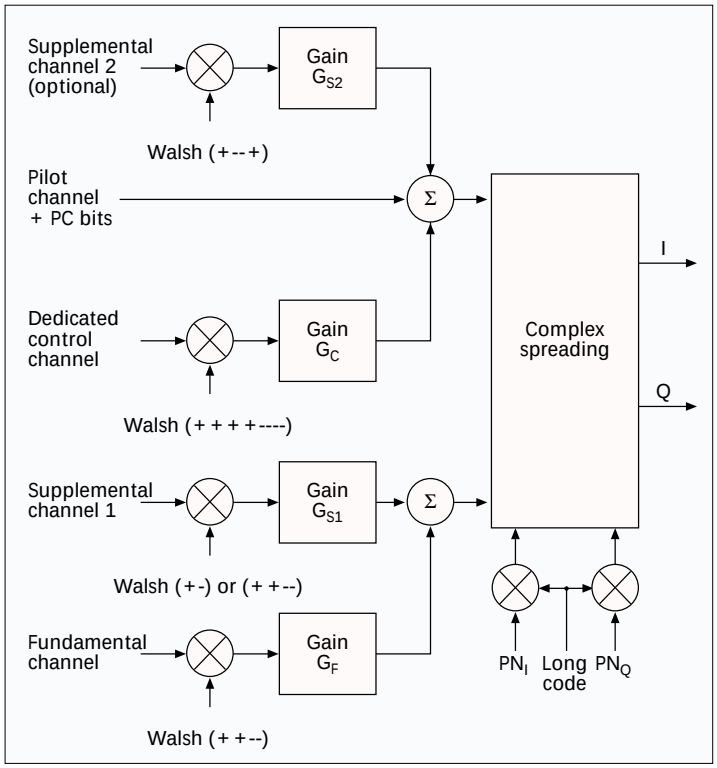

■ **Figure 38.** *The uplink dedicated channel structure.*

The reverse access channel (R-ACH) and the reverse common control channel (R-CCCH) are common channels used for communication of layer 3 and MAC layer messages. The R-ACH is used for initial access, while the R-CCCH is used for fast packet access.

The fundamental channel conveys voice, signaling, and low rate data. Basically it will operate at low FER (around 1 percent). The fundamental channel supports basic rates of 9.6 Kb/s and 14.4 Kb/s and their corresponding subrates (i.e., Rate Set 1 and 2 of IS-95). The fundamental channel will always operate in soft handover mode. The fundamental channel does not operate in a scheduled manner; thus permitting the mobile station to transmit acknowledgments or short packets without scheduling. This reduces delay and the processing load due to scheduling [52]. Its main difference compared to the IS-95 voice channel is that discontinuous transmission is implemented using repetition coding rather than gated transmission.

The supplemental channel provides high data rates. The uplink supports one or two

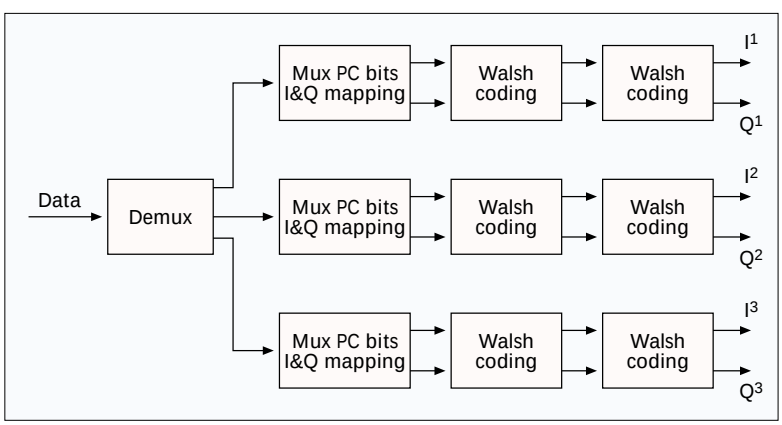

■ **Figure 39.** *Multicarrier downlink.*

[10] *Assuming a three-times increase in bandwidth compared to IS-95B. Options using 6 times, 9 times, and 12 times IS-95 bandwidths are possible.*

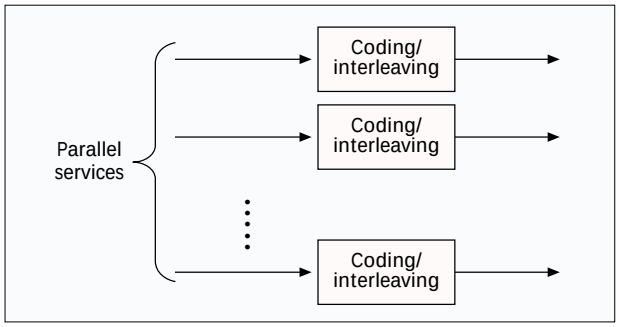

■ **Figure 40.** *Principle of code multiplexing.*

supplemental channels. If only one supplemental channel is transmitted, then the Walsh code (+–) is used on the first supplemental channel, and if two supplemental channels are transmitted then the Walsh code (+–+–) is used. A repetition scheme is used for variable data rates on the supplemental channel.

Downlink Physical Channels. Downlink has three different dedicated channels and three common control channels. Similar to the uplink, the fundamental and supplemental channels carry user data and the dedicated control channel control messages. The dedicated control channel contains power control bits and rate information. The synchronization channel is used by the mobile stations to acquire initial time synchronization. One or more paging channels are used for paging the mobiles. The pilot channel provides a reference signal for coherent detection, cell acquisition, and handover.

In the downlink, cdma2000 has a common pilot channel, which is used as a reference signal for coherent detection when adaptive antennas are not employed. The pilot channel is similar to IS-95 (i.e., it is comprised of a long PN-code and Walsh sequence number 0). When adaptive antennas are used, auxiliary pilot is used as a reference signal for coherent detection. Code multiplexed auxiliary pilots are generated by assigning a different orthogonal code to each auxiliary pilot. This approach reduces the number of orthogonal codes available for the traffic channels. This limitation is alleviated by expanding the size of the orthogonal code set used for the auxiliary pilots. Since a pilot signal is not modulated by data, the pilot orthogonal code length can be extended, thereby yielding an increased number of available codes, which can be used as additional pilots

As mentioned, two alternatives for downlink modulation still exist: direct spread and multicarrier. The multicarrier transmission principle is illustrated in Fig. 39. A Performance comparison of direct spread and multicarrier can be found in [53].

SPREADING — On the downlink, the cell separation for cdma2000 is performed by two M-sequences of length 2^{15}, one for the I channel and one for the Q channel, which are phase shifted by PN-offset for different cells. Thus, during the cell search process only these sequences need to be searched. Since there is only a limited number of PN-offsets, they need to be planned in order to avoid PN-confusion [54]. In the uplink, user separation is performed by different phase shifts of M-sequence of length 2^{41}. The channel separation is performed using variable spreading factor Walsh sequences, which are orthogonal to each other. Fundamental and supplemental channels are transmitted with the multicode principle. The variable spreading factor scheme is used for higher data rates in the supplemental channel.

Similar to WCDMA, complex spreading is used. In the uplink, it is used with dual-channel modulation.

MULTIRATE — The fundamental and supplemental channels can have different coding and interleaving schemes. In the downlink, high bit rate services with different QoS requirements are code multiplexed into supplemental channels, as illustrated Fig. 40. In the uplink, one or two supplemental channels can be transmitted. The user data frame length of cdma2000 is 20 ms. For the transmission of control information, 5- and 20-ms frames can be used on the fundamental channel. Also on the fundamental channel a convolutional code with constraint length of 9 is used. On supplemental channels a convolutional code is used up to 14.4 Kb/s. For higher rates Turbo codes with constraint length 4 and rate 1/4 are preferred. Rate matching is performed by puncturing, symbol repetition, and sequence repetition.

PACKET DATA — cdma2000 uses also the slotted Aloha principle for packet data transmission. However, instead of fixed transmission power it increases the transmission power for the random access burst after an unsuccessful access attempt. When the mobile station has been allocated a traffic channel, it can transmit without scheduling up to a predefined bit rate. If the transmission rate exceeds the defined rate, a new access request has to be made. When the mobile station stops transmitting, it releases the traffic channel but not the dedicated control channel. After a while it also releases the dedicated control channel but maintains the link layer and network layer connections in order to shorten the channel setup time when new data need to be transmitted. Short data bursts can be transmitted over a common traffic channel in which a simple ARQ is used to improve the error rate performance.

HANDOVER — It is expected that soft handover of the fundamental channel will operate similarly to the soft handover in IS-95. In IS-95, the Active Set is the set of base stations transmitting to the mobile station. For the supplemental channel, the Active Set can be a subset of the Active Set for the fundamental channel. This has two advantages. First, when diversity is not needed to counter fading, it is preferable to transmit from fewer base stations. This increases the overall downlink capacity. For stationary conditions, an optimal policy is to transmit only from one base station — the base station that would radiate the smallest

	TTA I	TTA II
Channel spacing	1.25 MHz/5 MHz/20 MHz	1.25 MHz/5 MHz/10 MHz/ 20 MHz
Chip rate	0.9216 Mc/s/3.6864 Mc/s/ 14.7456 Mc/s	1.024 Mc/s/4.096 Mc/s/ 8.192 Mc/s/16.834 Mc/s
Frame length	20 ms	10 ms
Spreading	Walsh + long codes	Walsh + long codes
Pilot for coherent detection	UL: pilot symbol based DL: common pilot	UL: pilot channel based (multiplexed with power control symbols) DL: common pilot
Base station synchronization	Synchronous	Asynchronous

■ **Table 6.** *Parameters or Korean wideband CDMA schemes.*

amount of downlink power. Second, for packet operation, the control processes can also be substantially simplified if the supplemental channel is not in soft handover. However, maintaining the fundamental channel in soft handover provides the ability to reliably signal the preferred base station to transmit the supplemental channel when channel conditions change [52].

TRANSMIT DIVERSITY — The downlink performance can be improved by transmit diversity. For direct spread CDMA schemes, this can be performed by splitting the data stream and spreading the two streams using orthogonal sequences. For multicarrier CDMA, the different carriers can be mapped into different antennas.

KOREAN AIR INTERFACES

In Korea, two wideband CDMA air interfaces are being considered: TTA I and TTA II. The Electronics and Telecommunications Research Institute (ETRI) has established an R&D consortium to define the Korean proposal for IMT-2000 during 1997 and 1999. A wideband CDMA proposal has been developed within ETRI [55–57]. SK Telecom has also developed a wideband CDMA air interface [58–62]. This has been combined with a number of other proposals to form the basis for the TTA II scheme [43]. The main parameters of these two air interfaces are listed in Table 6. The TTA II concept is closer to cdma2000, and TTA I resembles WCDMA. For a more details of these schemes, refer to [30–31].

DIFFERENCES BETWEEN TTA I AND CDMA2000 — The differences between TTA I and cdma2000 include:
- A 1.6-kHz power control rate instead of 800 Hz
- A 10-ms frame length instead of 20 ms
- Orthogonal complex QPSK (OCQPSK) in the uplink
- Selectable forward error correction code
- Time division transmit diversity (TDTD) instead of orthogonal transmit diversity in the downlink
- Quasi orthogonal code spreading to increase the number of orthogonal codes for packet operation
- Intercell asynchronous mode
- The lowest chip rate of 0.9216 Mc/s instead of 1.2288 Mc/s

OCQPSK constraints phase transitions within certain period to be $\pi/2$. The possible advantages of this scheme are [7].
- Reduced linearity requirements for power amplifier
- Small complexity since only one PN code is used

DIFFERENCES BETWEEN TTA II AND WCDMA — The differences between TTA II and WCDMA include:
- Continuous pilot in the uplink
- QPSK spreading in the downlink
- Orthogonal complex QPSK (OCQPSK) in the uplink
- Selectable forward error correction code
- Quasi orthogonal code spreading to reduce the intracell interference
- The downlink pilot structure
- Optional synchronization in the uplink

The original chip rate of the SK Telecom scheme was 4.068 Mchip [41]. This was changed to 4.096 Mc/s as a result of harmonization with the Japanese Core-A proposal.

In TTA II, the different cells in the downlink and the users in the uplink are distinguished by long spreading codes. Since TTA II has long spreading codes, it uses two pilots channels in the downlink, a cluster pilot and a cell pilot, to reduce long synchronization time. A cluster consists of several cells, and under each cluster the same long spreading code pilots are reused. Each cluster has a cluster pilot that is also a long spreading sequence. There are 16 cluster pilots, and each cluster can have 32 cell sequences. Thus, a maximum 48 pilot codes need to be searched (i.e., 16 cluster pilot codes and 32 cell pilot codes). A cluster pilot can be transmitted by the center cell of a cluster or by each cell. The former technique is suited for a hierarchical cell system.

To reduce the intracell interference, the TTA II wideband CDMA scheme time synchronizes all users in the uplink with an accuracy of 1/8 chip. This is done by measuring the timing in the base station and signaling the timing adjustment commands with a rate of 2 Kb/s to the mobile station. However, multipath results in intracell interference, and the gain from the orthogonal uplink depends on the channel profile. In addition, the signaling traffic reduces the downlink capacity for each user by 2 Kb/s.

CONCLUSIONS

The major objectives of this article is to review the CDMA based present and future systems namely, IS-95 and IMT-2000, respectively.

An overview of the main wideband CDMA air interfaces is presented in detail by describing WCDMA in Europe and Japan, cdma2000 in the United States, and Korean wideband CDMA schemes.

The different proposals have already been submitted to the ITU RTT selection process. Meanwhile, the regional standarization activities will continue to refine the technical parameters of the proposals. Whether the outcome of these two parallel activities will result into a further harmonization between the proposals remains to be seen.

It is worth mentioning here that this article addresses only the CDMA in terrestrial communications. However, it should be noted that the effort is going on to develop CDMA based advanced satellite air interface that can effectively cope with the requirements of the third-generation mobile systems (IMT-2000/UMTS).

To keep the pace with the ongoing international standarization effort, CDMA based satellite radio access schemes have also been submitted to ITU RTT.

REFERENCES

[1] Ojanpera and R. Prasad, Wideband CDMA for Third Generation Mobile Communications, Artech House, Oct. 1998.
[2] Prasad, Universal Wireless Personal Communications, Artech House, Boston-London, July 1998.
[3] Prasad, CDMA for Wireless Personal Communications, Artech House, Boston-London, 1996.
[4] Ojanpera, "Overview of Research Activities for Third Generation Mobile Communication," in Wireless Communications TDMA vs. CDMA (S.G. Glisic and P.A. Leppanen, Eds.), Kluwer Academic Publishers, 1997, pp. 415-446.
[5] Ojanpera and R. Prasad, "Overview of Air Interface Multiple Access for IMT-2000/UMTS," *IEEE Commun. Mag.,* to appear in Sept. 1998.
[6] Shannon, "A Mathematical Theory of Communication," Bell System Technical Journal, Vol. 27, 1948, pp. 379-423 and 623-656.
[7] Scholtz, "The Evolution of Spread-Spectrum Multiple-Access Communications," in Code Division Multiple Access Communications (S. G. Glisic and P. A. Leppanen, Eds., Kluwer Academic Publishers, 1995.
[8] "A conversation with Claude Shannon," *IEEE Commun. Mag.,* Vol. 22, No. 5, May 1984, pp.123-126.
[9] Cooper and R. W. Nettleton, "A spread-spectrum techniques for high-capacity mobile communications," *IEEE Trans. Veh. Tech.*, Vol. 27, No. 4, Nov. 1978, pp. 264-275.
[10] Verdu, "Minimum Probability of Error for Asynchronous Gaussian Multiple Access," *IEEE Trans. on IT.,* Vol. IT-32, No. 1, Jan. 1986, pp. 85-96.
[11] Garg, V. K., K. Smolik, and J. E. Wilkes, Applications of CDMA in Wireless/Personal Communications, Prentice-Hall, 1997.

[12] Viterbi, A. J., CDMA Principles of Spread-Spectrum Communications, Reading, Mass.: Addison-Wesley Publishing Company, 1995.
[13] Gustafsson, M., K. Jamal, and E. Dahlman, "Compressed Mode Techniques for Interfrequency Measurements in a Wide-band DS-CDMA System," *Proc. of PIMRC'97*, Helsinki, Finland, Sep. 1997, pp. 23-35.
[14] Verd˙, S., "Adaptive Multiuser Detection," in Code Division Multiple Access Communications, S. G. Glisic and P. A. Leppanen, Eds., Boston: Kluwer Academic Publishers, 1994, pp. 97-116.
[15] Moshavi, S., "Multiuser Detection for DS-CDMA Communications," *IEEE Commun. Mag.,* Oct. 1996, pp. 12-36.
[16] Duel-Hallen, A., J. Holtzman, and Z. Zvonar, "Multiuser Detection for CDMA Systems," *IEEE Personal Commun.,* April 1995, pp. 4-8.
[17] Juntti, M., and S. Glisic, "Advanced CDMA for Wireless Communications," in Wireless Communications TDMA versus CDMA, S. Glisic and P. Leppanen (Eds.), Boston: Kluwer Academic Publishers, 1997, pp. 447-490.
[18] TIA/EIA-95B, "Mobile Station-Base Station Compatibility Standard for Dual-Mode Wideband Spread Spectrum Cellular Systems," Baseline Version, July 31, 1997.
[19] TIA/EIA-95A, "Mobile Station-Base Station Compatibility Standard for Dual-Mode Wideband Spread Spectrum Cellular Systems" ,1995.
[20] ANSI J-STD-008, "Personal Station-Base Station Compatibility Requirements for 1.8 to 2.0 GHz Code Division Multiple Access (CDMA) Personal Communications Systems" ,1995.
[21] TIA/EIA/IS-97, "Recommended Minimum Performance Standards for Base Stations Supporting Dual-Mode Wideband Spread Spectrum Cellular Mobile Stations," Dec. 1994.
[22] TIA/EIA/IS-98, "Recommended Minimum Performance Standards for Dual-Mode Wideband Spread Spectrum Cellular Mobile Stations," Dec. 1994.
[23] Ross, A. H. M., and K. L. Gilhousen, "CDMA Technology and the IS-95 North American Standar," ,in The Mobile Communications Handpaper, J. D. Gipson (Ed.), CRC Press, 1996, pp. 430-448.
[24] Nikula, E., A. Toskala, E. Dahlman, L. Girard, and A. Klein, "FRAMES Multiple Access for UMTS and IMT-2000," *IEEE Pers. Commun.*, April 1998.
[25] ETSI, "The ETSI UMTS Terrestrial Radio Access (UTRA) ITU-R RTT Candidate Submission," June 1998.
[26] ARIB, "Japan's Proposal for Candidate Radio Transmission Technology on IMT-2000:W-CDMA," June 1998.
[27] T1P1, "IMT-2000 Radio Transmission Technology Candidate," June 1998.
[28] TR46, "TR46 RTT Candidate based on the WIMS W-CDMA Proposal," June 1998.
[29] TIA, "The cdma2000 ITU-R RTT Candidate Submission," June 1998.
[30] TTA, Global CDMA I: Multiband Direct-Sequence CDMA System RTT System Description," June 1998.
[31] TTA, "Global CDMA II for IMT-2000 RTT System Description," June 1998.
[32] Ishida, Y., "Recent Study on Candidate Radio Transmission Technology for IMT-2000," First Annual CDMA European Congress, London, UK, Oct. 1997.
[33] Ojanpera, T., M. Gudmundson, P. Jung, J. Skˆld, R. Pirhonen, G. Kramer, and A. Toskala, "FRAMES (Hybrid Multiple Access Technology," *Proc. of ISSSTA'96,* Vol. 1, Mainz, Germany, Sept. 1996, pp. 320-324.
[34] Ojanpera, T., P.-O. Anderson, J. Castro, L. Girard, A. Klein, and R. Prasad, "A Comparative Study of Hybrid Multiple Access Schemes for UMTS," Proc. of ACTS Mobile Summit Conf., Vol. 1, Granada, Spain, Nov. 1996, pp. 124-130.
[35] Ojanpera, T., J. Sköld, J. Castro, L. Girard, and A. Klein, "Comparison of Multiple Access Schemes for UMTS," Proc. of VTC'97, Vol. 2, Phoenix, Arizona, USA, May 1997, pp. 490-494.
[36] Ojanpera, T., A.Klein, and P.-O. Anderson, "FRAMES Multiple Access for UMTS," IEE Colloquium on CDMA Techniques and Applications for Third Generation Mobile Systems, London, May 1997.
[37] Ovesjˆ, F., E. Dahlman, T. Ojanpera, A. Toskala, and A. Klein, "FRAMES Multiple Access Mode 2 (Wideband CDMA," Proc. of PIMRC97, Helsinki, Finland, Sept. 1997, pp. 42–46.
[38] Nikula, E., A. Toskala, E. Dahlman, L. Girard, and A. Klein, "FRAMES Multiple Access for UMTS and IMT-2000," *EEE Pers. Commun.*, April 1998.
[39] CSEM/Pro Telecom, Ericsson, France TÈlÈcom (CNET, Nokia, Siemens, "FMA - FRAMES Multiple Access A Harmonized Concept for UMTS/IMT-2000," ITU Workshop on Radio Transmission Technologies for IMT-2000, Toronto, Canada, Sept. 10-11, 1997.
[40] ARIB FPLMTS Study Committee, "Report on FPLMTS Radio Transmission Technology SPECIAL GROUP, (Round 2 Activity Report)," Draft v.E1.1, Jan. 1997.
[41] Adachi, F., K. Ohno, M. Sawahashi, and A. Higashi, "Multimedia mobile radio access based on coherent DS-CDMA," Proc. of 2nd International workshop on Mobile Multimedia Commun., A2.3, Bristol University, UK Apr. 1995.
[42] Ohno, K., M. Sawahashi, and F. Adachi, "Wideband coherent DS-CDMA," *Proc. of VTC' 95*, Chicago, Illinois, USA, July 1995, pp. 779–783.
[43] Dohi, T., Y. Okumura, A. Higashi, K. Ohno, and F.Adachi, "Experiments on Coherent Multicode DS-CDMA," Proc. of VTC'96, Atlanta, Georgia, USA, April 1996, pp. 889–893.
[44] Adachi, F., M. Sawahashi, and K. Ohno, "Coherent DS-CDMA: Promising Multiple Access for Wireless Multimedia Mobile Communications," Proc. of ISSSTA'96, Mainz, Germany, Sept. 1996, pp. 351–358.
[45] Onoe, S., K. Ohno, K. Yamagata and T. Nakamura, "Wideband-CDMA Radio Control Techniques for Third Generation Mobile Communication Systems," Proc. of VTC97, Vol. 2, Phoenix, Arizona, USA, May 1997, pp. 835–839.
[46] Recommendation ITU-R M.1035, "Framework for the Radio Interface(s) and Radio Sub-System Functionality for Future Public Land Mobile Telecommunication Systems (FPLMTS)," 1994.
[47] Toskala, A., E. Dahlman, M. Gustafsson, M. Latva-Aho, and M. J. Rinne, "Frames Multiple Access Mode 2 Physical Transport Control Functions," Proc. of ACTS Summit, Aalborg, Denmark, Oct. 1997, pp. 697–702.
[48] Higuchi, K., M. Sawahashi and F. Adachi, "Fast Cell Search Algorithm in DS-CDMA Mobile Radio Using Long Spreading Codes," *Proc. of VTC97*, Vol.3, Phoenix, Arizona, USA, May 1997, pp. 1430-1434.
[49] Mouly, M., and M.-B. Pautet, The GSM System for Mobile Communications, published by the authors, 1992
[50] TIA/EIA/IS-95-A, "Mobile Station-Base Station Compatibility Standard for Dual-Mode Wideband Spread Spectrum Cellular System," Telecommunications Industry Association, Washington, D.C., May 1995.
[51] Chia, S., "Will cdmaOne be the third choice," CDMA Spectrum, Issue 2, pp. 30-34, Sept. 1997.
[52] Tiedemann, Jr., E. G., Y.-C. Jou, and J. P. Odenwalder, "The Evolution of IS-95 to a Third Generation System and to the IMT-2000 Era," *Proc. of ACTS Summit 1997*, Aalborg, Denmark, Oct. 1997, pp. 924–929.
[53] Jalali, A., and A. Gutierrez, "Performance Comparison of Alternative Wideband CDMA Systems," *Proc. of ICC'98*, Atlanta, Georgia, USA, June 1998, pp. 38–42.
[54] Yang, J., D. Bao and M. Ali, "PN Offset Planning in IS-95 based CDMA system" *Proc. of VTC'97*, Vol. 3, Phoenix, Arizona, USA, May 1997, pp. 1435–1439.
[55] Bang, S. C., H-R. Park and Y. Han, "Performance Analysis of Wideband CDMA System for FPLMTS," *Proc. of VTC'97*, Phoenix, Arizona, USA, May 1997, pp. 830(834
[56] Park, H.-R., "A Third Generation CDMA System for FPLMTS Application," The 1st CDMA International Conf., Seoul Korea, Nov. 1996.
[57] Han, Y., S. C. Banh, H.-R. Park and B.-J. Kang, "Performance of Wideband CDMA System for IMT-2000," 2nd CDMA international Conf. (CIC), Seoul, Korea, Oct. 1997, pp. 583–587.
[58] Koo, J. M., Y. I. Kim, J. H. Ryu and J. I. Lee, "Implementation of prototype wideband CDMA system," *Proc. of ICUPC' 96*, Cambridge, Massachusetts, USA, Sept./Oct. 1996, pp. 797–800.
[59] Koo, J. M., E. K. Hong and J. I. Lee, "Wideband CDMA technology for FPLMTS," The 1st CDMA International Conf., Seoul Korea, Nov. 1996.
[60] Park, E. K. Hong, T.-Y. Lee, Y.-D. Yang and S.-M. Ryu, "Radio Characteristics of PCS using CDMA," Proc. of IEEE VTC'96, Atlanta, Georgia, USA, April 1996, pp. 1661–1664.
[61] Hong, E. K., T.-Y. Lee, Y.-D. Yang, B.-C. Ahn and Y.-W. Park, "Radio Interface Design for CDMA-Based PCS," Proc. of ICUPC¥96, Cambridge, Massachusetts, USA, Sept./Oct. 1996, pp. 365–368.
[62] Hong, E. K., "Intercell Asynchronous W-CDMA System for IMT-2000," ITU-R TG 8/1 workshop, Toronto, Canada, Sept., 1997.

BIOGRAPHIES

RAMJEE PRASAD [SM '90] (r.prasad@its.tidelft.nl) received a B.Sc. (Eng) degree from Bihar Institute of Technology, Sindri, India and M.Sc. (Eng) and Ph.D. degrees from Birla Institute of Technology (BIT), Ranchi, India, in 1968, 1970, and 1979, respectively. He joined BIT as a Senior Research Fellow in 1970 and became associate professor in 1980. While he was with BIT, he supervised a number of research projects in the areas of microwave communications and plasma engineering. During 1983 to 1988, he was with the University of Dar es Salaam (UDSM), Tanzania, where he rose to the level of professor of telecommunications at the Department of Electrical Engineering in 1986. At USDM, he was responsible for the collaborative project "satellite Communications for Rural Zones" with Eindhoven University of Technology, The Netherlands. Since February 1988, he has been with the Telecommunications and Traffic-Control Systems Group of Delft University of Technology (DUT), The Netherlands, where he is actively involved the area of wireless personal and multimedia communications (WPMC). He is head of the Transmission Research Section of IRCTR (International Research Centre for Telecommunications-transmission and Radar) and also Program Director of a newly established Center for Wireless Personal Communications (CEWPC). He is currently involved in the European ACTS project FRAMES (Future Radio Wideband Multiple Access System) as a Project Leader of DUT. He is Project Leader of several international industrial funded projects. He has published over 300 technical papers, authored and co-edited three books, *CDMA for Wireless Personal Communications*, *Universal Wireless Personal Communications*, and *Wideband CDMA for Third Generation Communications*, published by Artech House, Boston. His current

research interest lies in wireless networks, packet communications, multiple access protocols, adaptive equalizers, spread-spectrum CDMA systems and multimedia communications. He has served as a member of advisory and program committees of several IEEE international conferences. He has also presented keynote speeches, invited papers, and tutorials on WPMC at various universities, technical institutions, and IEEE conferences. He was Organizer and Interim Chair of the IEEE Vehicular Technology/Communications Society Joint Chapter, Benelux Section. He is now the Elected Chair of the joint chapter. He is also founder of the IEEE Symposium on Communications and Vehicular Technology (SCVT) in the Benelux and he was the Symposium Chairman of SCVT'93. He is Co-ordinating Editor and Editor-in-chief of the Kluwer international journal, *Wireless Personal Communications* and is also a member of the editorial board of other international journals, including *IEEE Communications Magazine,* and *IEE Electronics Communication Engineering Journal*. He was the Technical Program Chair of the PIMRC '94 International Symposium held in The Hague, The Netherlands, during Sept. 19-23, 1994, and also of the Third Communications Theory Mini-Conf. in conjunction with the GLOBECOM '94 held in San Francisco, CA, November 27-30, 1994. He is the Conference Chair of IEEE Vehicular Technology Conference, VTC '99 (Fall), Amsterdam, The Netherlands to be held on Sept. 19-22, 1999.

TERO OJANPERA received his M.Sc. degree from University of Oulu, Finland, in 1991. From 1991 to 1992 he worked for Nokia Mobile Phones as a research engineer. From 1992 to 1995 he led a radio systems research group concentrating to CDMA, GSM WLL and US TDMA in Nokia Mobile Phones, Oulu, Finland. From 1994 to 1995 he was also a project manager of the wideband CDMA concept development within Nokia. Later, this concept formed the basis for the FRAMES Wideband CDMA. From 1995 to 1997 he was a research manager in Nokia Research Center, Helsinki, Finland, heading the third-generation radio research program within Nokia. During 1996 he was also leader of a work package in the FRAMES project, responsible for the selection of the FRAMES Multiple Access (FMA) scheme. The FRAMES Wideband CDMA was the basis for the UMTS WCDMA concept in ETSI. From 1994 to 1997 he was a Nokia representative for the UMTS radio interface issues in the ETSI SMG5 and SMG2 standardization committees. From August 1997 to August 1998, he worked as a principal engineer in Nokia Research Center, Irving, TX. His was involved in the U.S. third-generation standards activities for the cdma2000. In addition, he was involved in technical/strategic work for Nokia's proposal for the UWC-136. Since September 1998, he has been with Nokia Telecommunications, Finland, as a Head of Research, Radio Access Systems.He is the author of a book Wideband CDMA for Third Generation Mobile Communications (Artech House, 1998). He has also authored several conference papers and a chapter in two books, *Wireless Communications TDMA vs. CDMA* (Kluwer Academic Publishers, 1997) and *GSM: Evolution Towards 3rd Generation* (Kluwer Academic Publishers, 1998). He is a member of IEEE.