US008555318B2

(12) **United States Patent**
Whitehead

(10) **Patent No.: US 8,555,318 B2**
(45) **Date of Patent: Oct. 8, 2013**

(54) **CUSTOMIZED MEDIA ON DEMAND**

(75) Inventor: **Steven D. Whitehead**, Hudson, MA (US)

(73) Assignee: **Verizon Patent and Licensing Inc.**, Basking Ridge, NJ (US)

(*) Notice: Subject to any disclaimer, the term of this patent is extended or adjusted under 35 U.S.C. 154(b) by 663 days.

(21) Appl. No.: **11/567,530**

(22) Filed: **Dec. 6, 2006**

(65) **Prior Publication Data**

US 2008/0141307 A1 Jun. 12, 2008

(51) **Int. Cl.**
G06F 3/00 (2006.01)

(52) **U.S. Cl.**
USPC **725/46**; 725/9; 725/44

(58) **Field of Classification Search**
None
See application file for complete search history.

(56) **References Cited**

U.S. PATENT DOCUMENTS

6,088,722 A * 7/2000 Herz et al. 709/217
6,240,555 B1 * 5/2001 Shoff et al. 725/110
6,389,467 B1 5/2002 Eyal
6,601,237 B1 * 7/2003 Ten Kate et al. 725/47
6,772,147 B2 * 8/2004 Wang 707/3
7,228,305 B1 * 6/2007 Eyal et al. 707/100
2001/0043795 A1 * 11/2001 Wood et al. 386/69
2002/0129375 A1 * 9/2002 Kim et al. 725/100
2003/0172378 A1 * 9/2003 Lalitha et al. 725/34
2004/0117828 A1 * 6/2004 Parker et al. 725/46
2006/0174269 A1 * 8/2006 Hansen-Turton 725/39
2006/0248570 A1 11/2006 Witwer
2007/0124769 A1 * 5/2007 Casey et al. 725/46
2007/0157260 A1 * 7/2007 Walker 725/86
2007/0204292 A1 * 8/2007 Riedl et al. 725/34

FOREIGN PATENT DOCUMENTS

CN 1298602 6/2001
CN 1640133 7/2005

* cited by examiner

Primary Examiner — Hai V Tran
Assistant Examiner — Rong Le

(57) **ABSTRACT**

A profile includes an indication of one or more topics of interest. A mixing server is configured to create a custom media channel based on the profile. A playback application is configured to provide the custom media channel upon a request from a user, wherein the custom media channel includes more than one item of multimedia content.

19 Claims, 6 Drawing Sheets

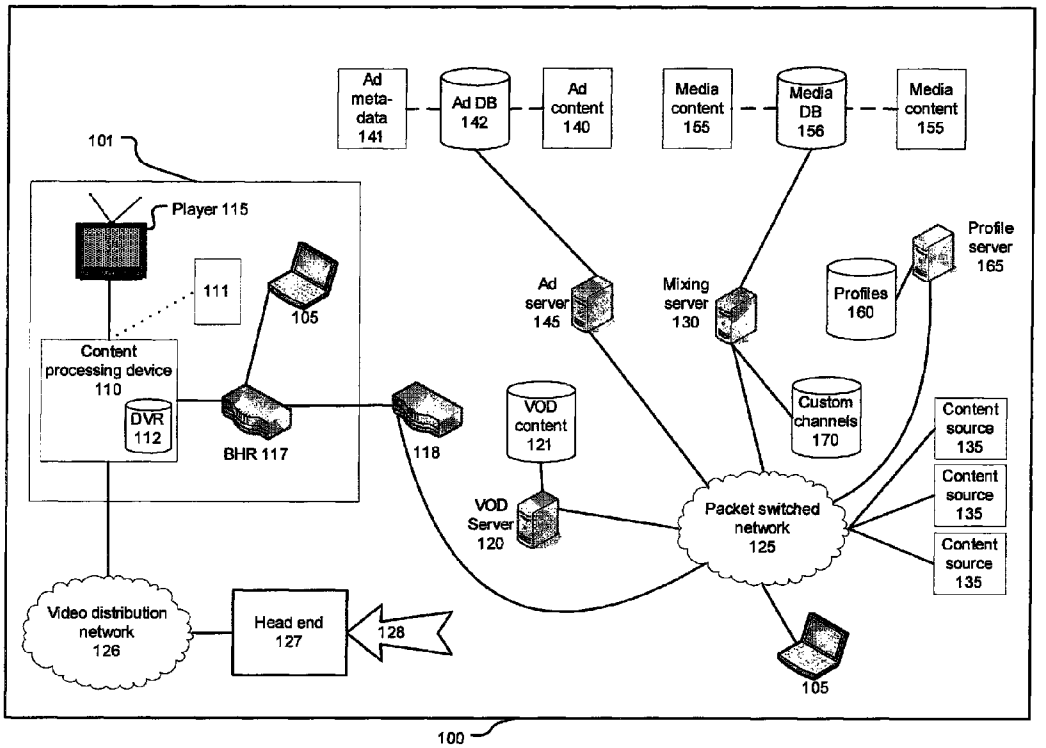

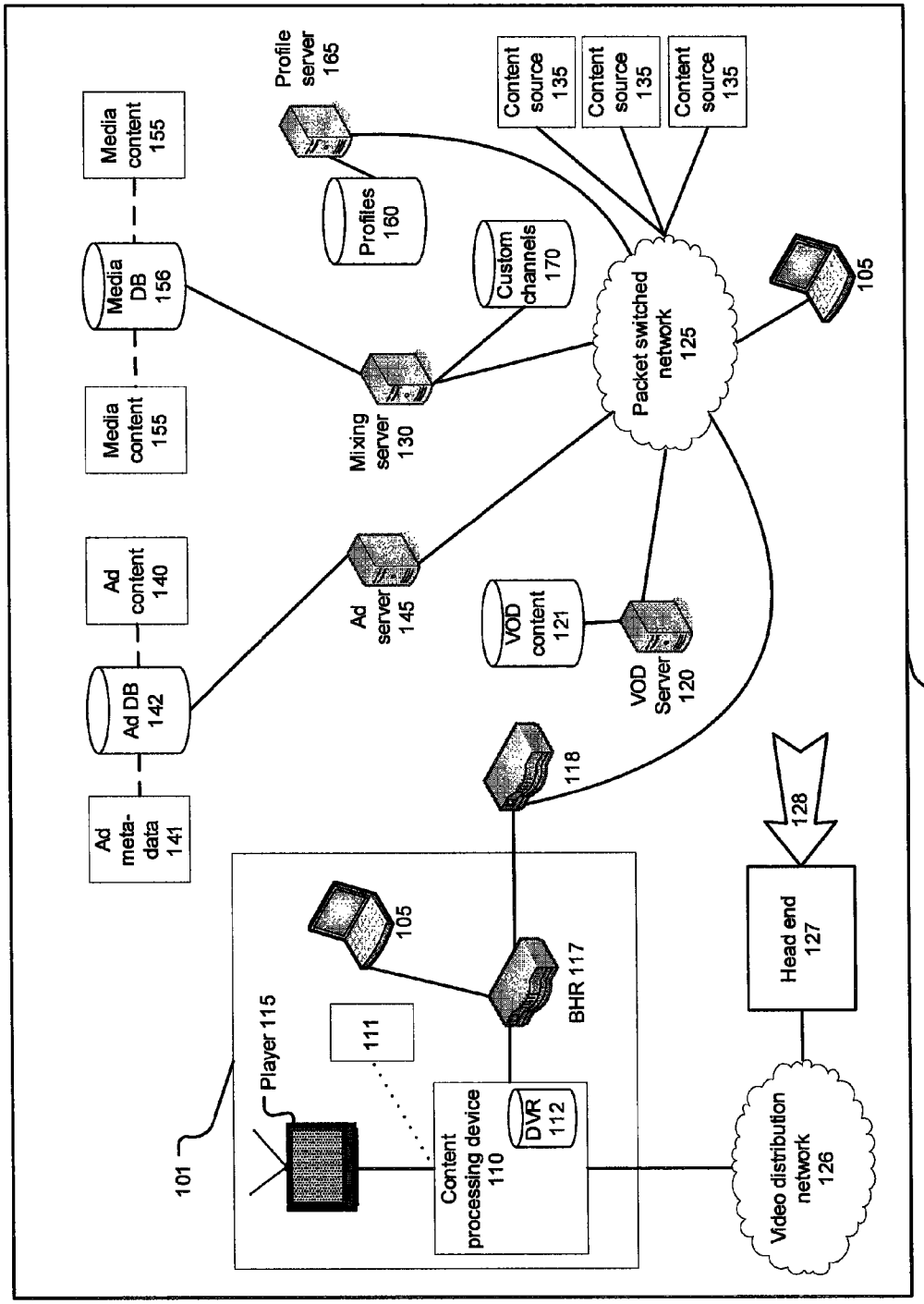
Ad meta-data 141
Ad DB 142
Ad content 140
Media content 155
Media DB 156
Media content 155
Ad server 145
Mixing server 130
Profile server 165
Profiles 160
Custom channels 170
Content source 135
Content source 135
Content source 135
Packet switched network 125
105
VOD content 121
VOD Server 120
118
128
Head end 127
Video distribution network 126
Content processing device 110
DVR 112
111
Player 115
105
BHR 117
101
100

FIG. 1

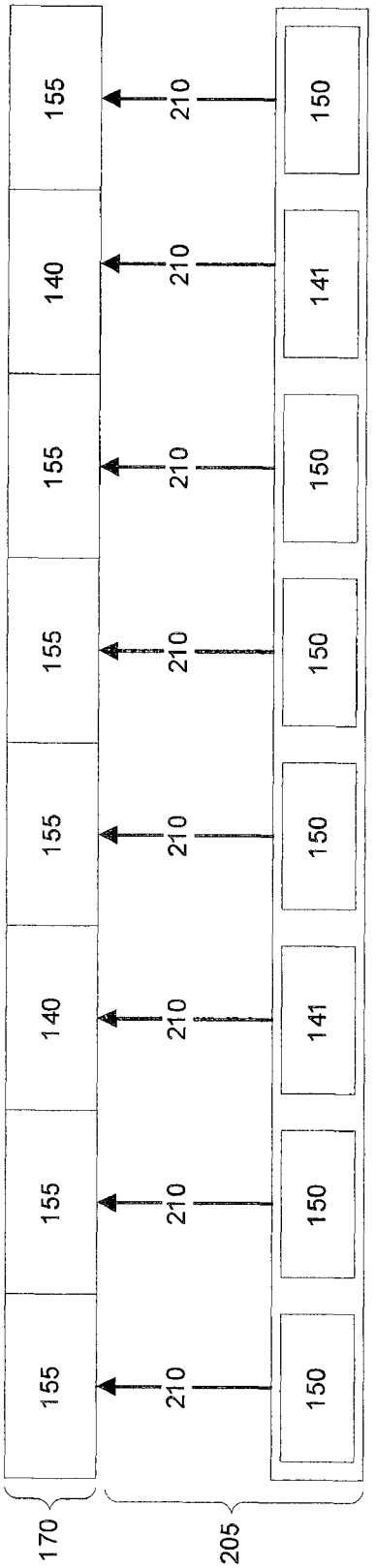
155
140
155
155
155
140
155
155
210
150
141
150
150
150
141
150
170
205

FIG. 2

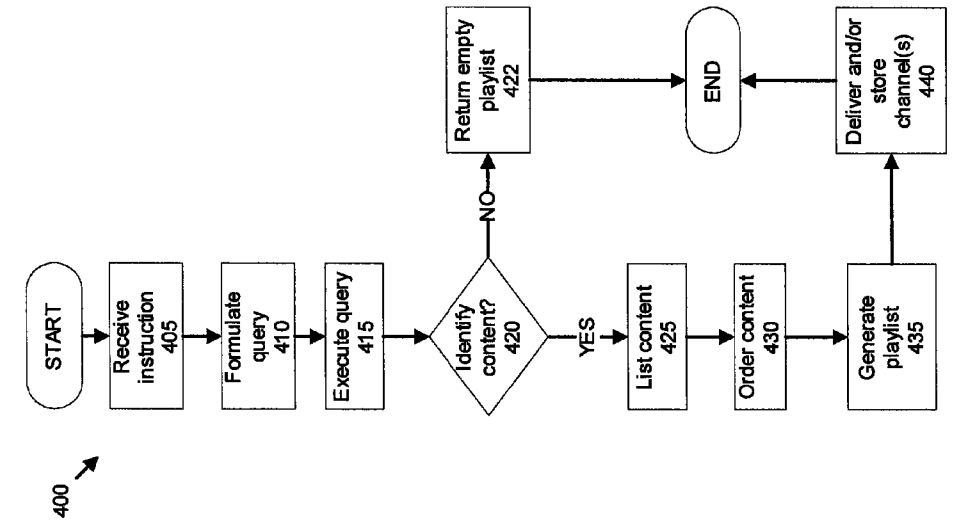
400
START
Receive instruction 405
Formulate query 410
Execute query 415
Identify content? 420
NO
Return empty playlist 422
END
YES
List content 425
Order content 430
Generate playlist 435
Deliver and/or store channel(s) 440

FIG. 4

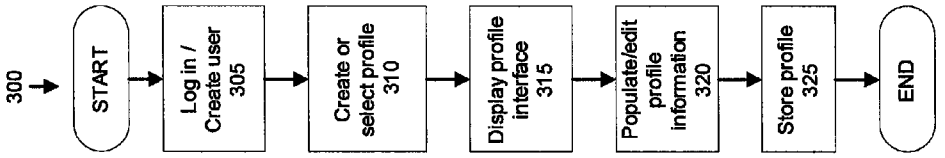
300
START
Log in / Create user 305
Create or select profile 310
Display profile interface 315
Populate/edit profile information 320
Store profile 325
END

FIG. 3

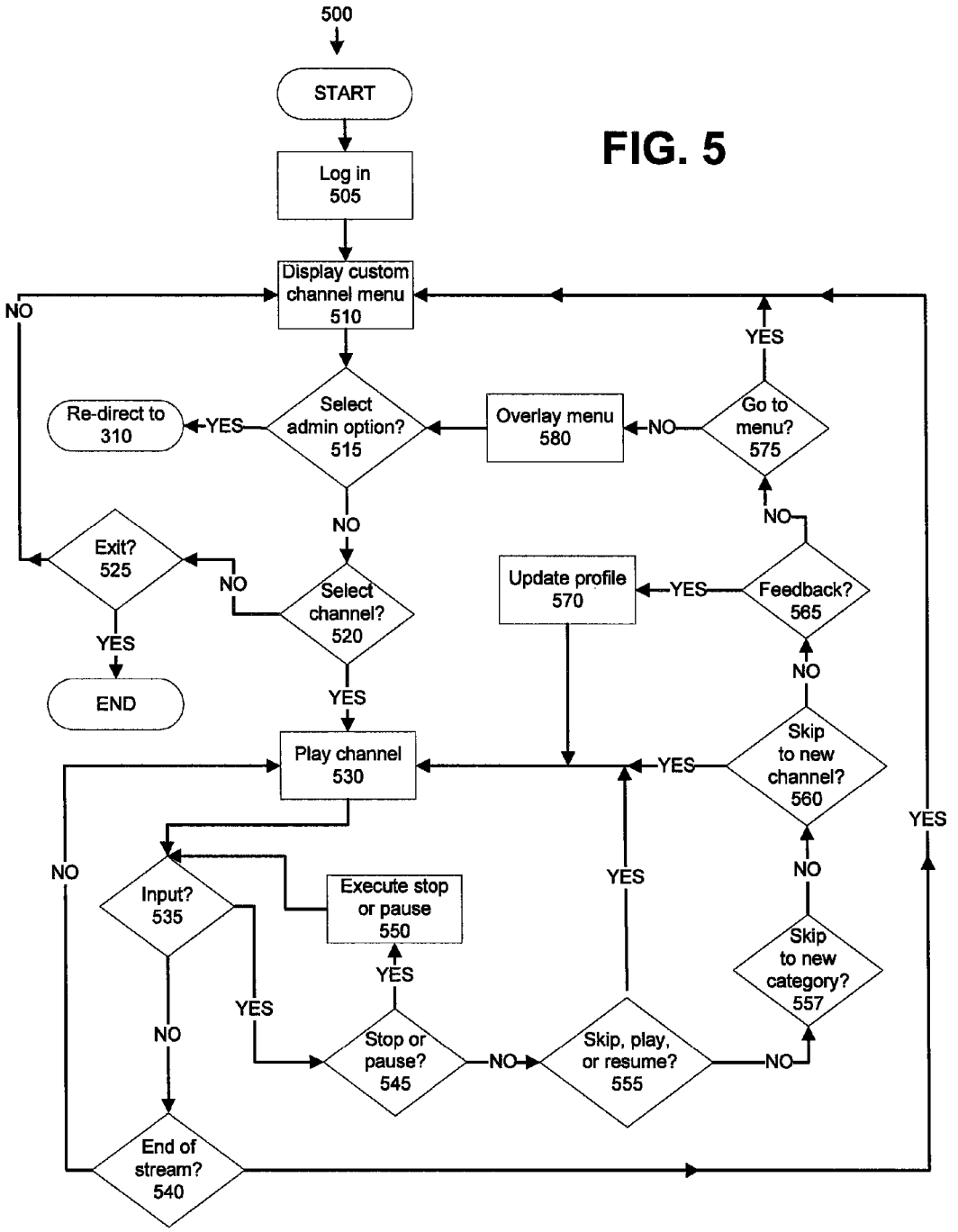
500
START
Log in
505
Display custom channel menu
510
Select admin option?
515
Re-direct to
310
YES
NO
Overlay menu
580
Go to menu?
575
YES
NO
Exit?
525
NO
YES
END
Select channel?
520
NO
YES
Update profile
570
YES
Feedback?
565
NO
Play channel
530
Skip to new channel?
560
YES
NO
YES
Input?
535
NO
YES
Execute stop or pause
550
YES
Stop or pause?
545
NO
Skip, play, or resume?
555
YES
NO
Skip to new category?
557
NO
End of stream?
540

FIG. 5

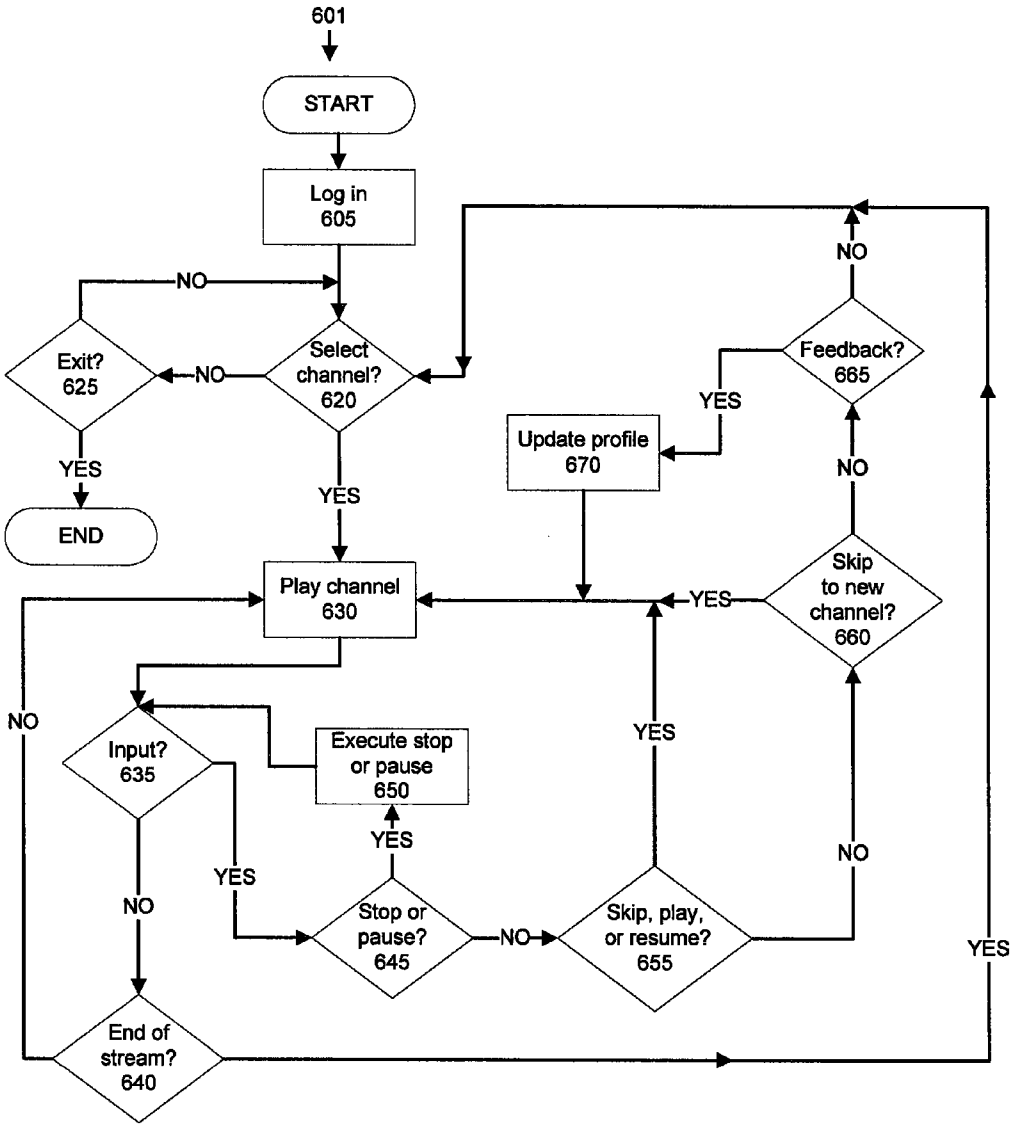
601
START
Log in
605
NO
Exit?
625
NO
Select
channel?
620
YES
END
YES
Play channel
630
NO
Input?
635
Execute stop
or pause
650
YES
NO
YES
Stop or
pause?
645
NO
Skip, play,
or resume?
655
YES
NO
End of
stream?
640
YES
Skip
to new
channel?
660
YES
NO
Feedback?
665
NO
YES
Update profile
670

FIG. 6

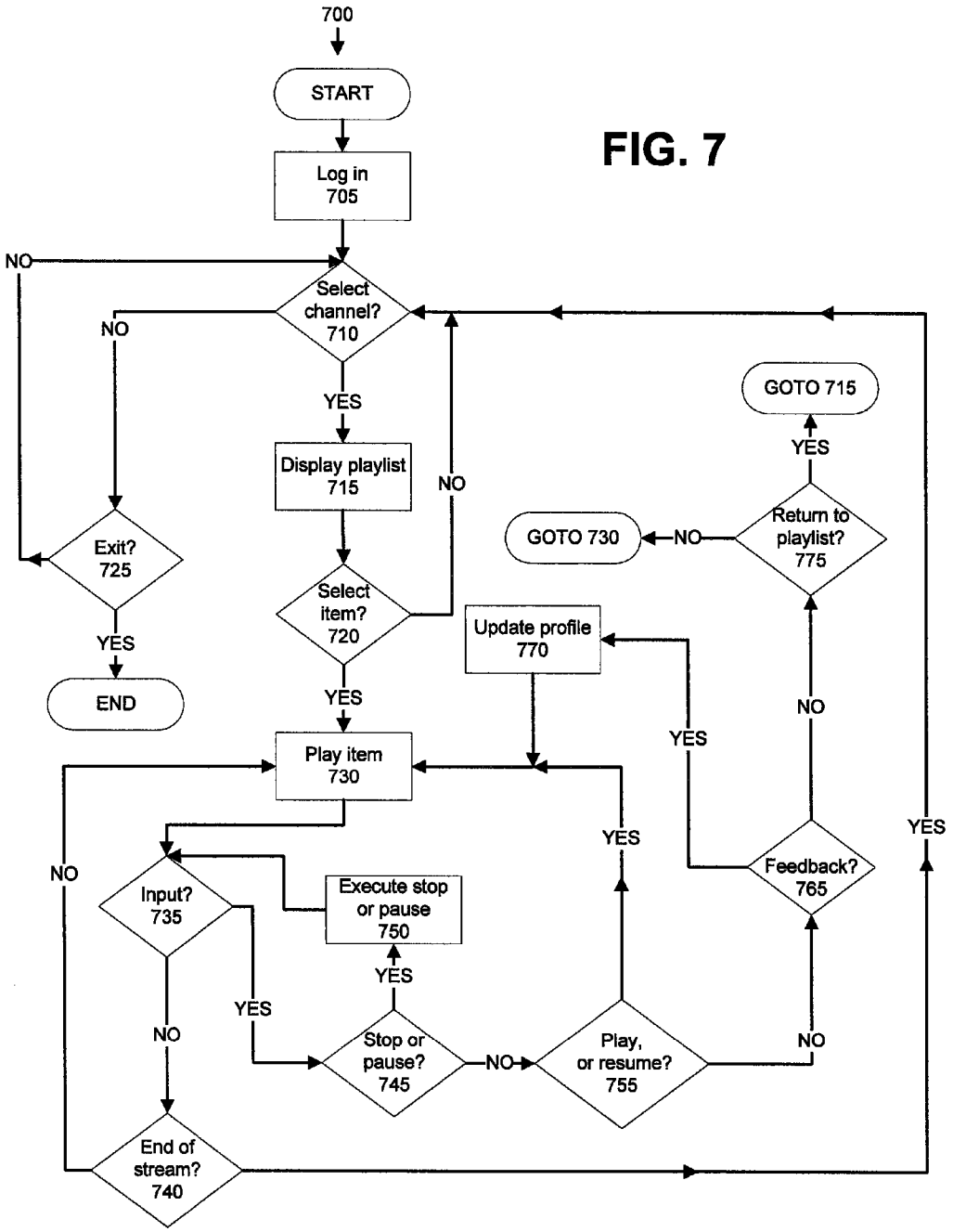
700
START
Log in
705
Select channel?
710
NO
YES
Display playlist
715
NO
Select item?
720
YES
Play item
730
Exit?
725
YES
END
NO
Input?
735
Execute stop or pause
750
YES
NO
Stop or pause?
745
YES
NO
Play, or resume?
755
NO
End of stream?
740
YES
Feedback?
765
YES
NO
Update profile
770
YES
Return to playlist?
775
NO
GOTO 730
YES
GOTO 715
YES

FIG. 7

CUSTOMIZED MEDIA ON DEMAND

BACKGROUND INFORMATION

Current multimedia programming such as video programming generally requires users to manually select content of interest. For example, a number of sites exist on the World Wide Web for providing video clips and the like. However, these sites generally require users to select videos for playback one by one. Thus, a user must manually locate a video of interest, select the video for playback, play it, and then repeat the process to play other videos. Accordingly, present mechanisms for presenting aggregated multimedia content such as video content generally do not present the aggregated content in a continuous stream. Further, users are generally limited to accessing such multimedia content via traditional computing devices (e.g., personal computers) connected to the Internet, and cannot access the multimedia content via television sets or the like.

In addition to video or multimedia aggregation websites, numerous sources presently exist for multimedia content such as video content. For example, video is presently broadcast into many homes on tens if not hundreds of channels. Generally not all of the content even on a single channel is of interest to a user, and certainly not all of the channels available are likely to be of interest to the user. Video on demand (VOD) is available to some subscribers to video services, but present VOD services generally allow users to select and view items of multimedia content, e.g., a movie, sporting event, etc, one at a time. Such items are generally at least thirty minutes long. Further, other than using a program guide such as an interactive program guide, a printed program guide, etc., users presently have no way of locating and viewing video content of interest other than by performing a manual search. Moreover, present program guides generally are generic and display a predetermined set of broadcast or video-on-demand programming available to a user, where users have a limited ability, if any, to customize the program guide.

In short, present mechanisms for presenting aggregated multimedia content such as video content do not filter or arrange multimedia content so as to present particular multimedia content of interest to the user upon the user's demand. Further, present mechanisms for presenting aggregated multimedia content do not allow a user to make a single request that returns a plurality of multimedia items without forcing the user to select the multimedia items one by one for viewing or listening.

BRIEF DESCRIPTION OF THE DRAWINGS

FIG. **1** illustrates an exemplary system for delivering video.

FIG. **2** illustrates an exemplary custom media channel and an exemplary playlist.

FIG. **3** illustrates an exemplary process for creating a profile for a custom media channel.

FIG. **4** illustrates an exemplary process for instantiating a custom media channel.

FIG. **5** illustrates an exemplary process for accessing and interacting with a custom media channel.

FIG. **6** illustrates an exemplary process for accessing a custom media channel in a channel selection mode.

FIG. **7** illustrates an exemplary process for accessing a custom media channel in an interactive mode.

DETAILED DESCRIPTION OF PREFERRED EMBODIMENTS

FIG. **1** illustrates an exemplary system **100** for delivering a video signal **128** and for displaying information and supporting custom media channels **170**.

As illustrated in FIG. **1**, a customer premise **101** includes a content processing device **110**, which may be controlled by a user through a control **111**. Content processing device **110** provides video or other multimedia to a user on a media player **115**, e.g., a television set or video monitor. Content processing device **110** may be a set top box (STB) or similar device known for receiving a video signal from a network and for providing programming such as video to media player **115**. A digital video recorder (DVR) **112** may be included in or attached to content processing device **110**.

One or more computers **105** may be in communication with content processing device **110**. As illustrated in FIG. **1**, customer premise **101** may include computer **105**, which may communicate with content processing device **110** through a network or router within customer premise **101** such as broadband home router **117**. Further, a computer **105** may communicate with content processing device **110** via packet switched network **125**, to which broadband home router **117** is connected. As described further below, computer **105** may include program instructions for providing a user interface through which a user may submit information concerning media of interest, and for submitting such information to a mixing server **130** and/or a profile server **165** to be stored in a custom channel profile **160**.

Control **111** is generally a remote control that selectively communicates with content processing device **110** through known wireless communications, such as infrared (IR) or radio frequency (RF) communications. Control **111** generally includes numeric keys for selecting channels of media, e.g., video programming, as well as other keys for making selections and request according to menus provided on media player **115**, in addition to arrow keys and the like for changing channels, changing volume, etc.

DVR **112** is generally known for storing video files, and may be used to store other kinds of multimedia files, such as audio files, image files, etc. As should be apparent, DVR **112** includes a computer-readable medium for storing digital data, including computer executable instructions and custom media channels **170**, which are discussed further below, including with reference to FIG. **2**. Video files stored on DVR **112** may be in any one of a variety of known formats, such as MPEG-2 or MPEG-4, promulgated by the Motion Picture Experts Group. Further, DVR **112** may include a known coder/decoder (codec) for decoding a custom media channel **170** for playback.

Media player **115** may be a television receiver such as is known, including a conventional television or a high definition television (HDTV). However, media player **115** may alternatively or additionally include software stored and executed on computer **105**, such as Windows Media Player from Microsoft Corporation of Redmond, Wash., QuickTime from Apple Computer, Inc., of Cupertino, Calif., or RealPlayer from Real Networks, Inc. of Seattle, Wash., etc.

Content processing device **110** selectively communicates, e.g., via a broadband home router (BHR) **117**, with a gateway router **118** to send information to, and receive information from, a packet switched network **125**. Content processing device **110** generally performs and/or coordinates operations associated with receiving, decoding, storing, and displaying multimedia content **150**. Device **110** also performs operations related to generating a user interface, e.g., that is displayed in

media player **115**, and responding to and processing user inputs, e.g., that are provided via control **111**. As mentioned above, content processing device **110** may be a set top box (STB). However, operations performed by content processing device **110** may also or may alternatively be embedded in a sufficiently configured general purpose computing platform such as a personal computer, e.g., computer device **105**.

A video distribution network **126** is a network for providing a video signal **128** such as is known. For example, network **126** may include hardware and software for providing video signal **128** via coaxial cable and/or fiber optic cable. As is known, video signal **128** is generally provided to a video distribution network **126** from a head end **127**.

Packet switched network **125** is generally an internet protocol (IP) network. As such, network **125** uses known protocols for transporting data, such as user datagram protocol (UDP), transport control protocol (TCP), hypertext transfer protocol (HTTP), etc. Further, network **125** may include a variety of networks such as a wide area network (WAN), e.g., the Internet, a local area network (LAN), etc. As is known, packet switched network **125** may be used to transport a variety of data, including multimedia data such as audio and video. Accordingly, it is to be understood that embodiments are possible in which networks **125** and **126** are in fact combined into a single network, or in which video distribution network **126** is simply omitted, whereby packet switched network **125** is used to provide video signal **128** to content processing device **110**.

BHR **117** is known for distributing audio, video, and data to devices within customer premises **101** such as content processing device **110**. For example, in one embodiment, BHR **117** is the broadband home router or wireless broadband home router from Actiontec Electronics, Inc. of Sunnyvale, Calif. It should be understood BHR **117** may be provided by other companies. Further, it should be understood that BHR **117** is not always necessary for connecting content processing device **110** to network **125**, e.g., a cable modem, DSL modem, or the like may be used alone or in combination with other network equipment.

Gateway router **118** is known for routing data packets in packet switched network **125**. Gateway router **118** allows content processing device **110** to access packet switched network **125**. By communicating with router **118**, BHR **117** is able to obtain a network address such as an internet protocol (IP) address, thereby allowing content processing device **110**, generally using Dynamic Host Configuration Protocol (DHCP), to in turn obtain a network address, e.g., an IP address, from BHR **117**. Content processing device **110** may accordingly make requests to, and to receive data from, servers **120**, **130**, etc. via network **125** accessed through BHR **117** and router **118**.

A video on demand (VOD) server **120** selectively communicates with content processing device **110** via network **125** and/or router **118**. VOD server **120** represents known combinations of hardware and/or software used to provide video-on-demand. Video to be provided on demand by VOD server **120** is stored as a VOD content **121** within VOD server **120** or a related database.

In general, a user of content processing device **110**, generally using control **111**, may browse a menu of video-on-demand options displayed on media player **115**. Upon the user making a selection of VOD content **121**, content processing device **110** makes a request to VOD server **120** for the VOD content **121**. Using known signaling protocols, VOD content **121** is provided to content processing device **110**, and displayed to the user on media player **115**. Such known signaling protocols generally support various actions by the users such as pause, rewind, stop, etc. For example, to process user commands and to communicate with VOD server **120**, content processing device **110** may include instructions for establishing a control channel with VOD server **121** according to Real Time Streaming Protocol (RTSP), described in H. Schulzrinne, RFC 2326—Real Time Streaming Protocol (RTSP) (April 1998), published by the Internet Society of Reston, Va. and available on the world wide web at the faqs.org website.

A mixing server **130** also selectively communicates with content processing device **110** via network **125** and/or router **118**. Mixing server **130** may also selectively communicate with VOD server **120**, generally through network **125**, although it is to be understood that other communications links are possible, or that servers **120** and **130** could even be located on the same hardware or even integrated into a single combined server. A basic purpose of the mixing server **130** is to assemble and deliver to content processing device **110** one or more custom media channels **170**. Mixing server **130** provides one or more custom media channels **170** to content processing device **110**, and thereby provides functionality similar to VOD server **120**, and in fact, embodiments are possible in which mixing server **130** and VOD server **120** are combined. In any event, content processing device **110** may include instructions for establishing a control channel with mixing server **130** using RTSP.

Further, mixing server **130** provides additional functionality for combining advertising content **140** and/or media content **155** to create custom media channels **170**, and to deliver custom media channels **170** to content processing device **110**. To create and/or store custom media channels **170**, mixing server **130** also accesses media metadata **150** and custom channel profiles **160**. A custom media channel **170** includes a logical concept of an aggregated collection of media content **155** and/or advertising content **140**, e.g., video clips, along with associated media metadata **150** and/or advertising metadata **141**, which metadata **150** and **141** may include control information such as metadata information about content **155** and **140**, play out order information, channel policy control information, etc. Content **155** and **140** included in a custom media channel **170** may be assembled and stored in advance of a user request for custom media channel **170**, or it may be assembled and managed in real-time or near real-time, and may not be persistently stored, as discussed further below

Although not shown in FIG. **1**, note that either VOD server **120** or mixing server **130** may also provide an interactive program guide (IPG) or the like including video on demand options. Alternatively, an IPG, if included in system **100**, may be provided by a separate server accessible to content processing device **110**, and moreover the IPG may be provided separately from any menu for video on demand services or custom media channels **170**.

Advertising content **140** and advertising metadata **141** are generally stored in an advertising database **142**, e.g., a relational database or the like, included in or associated with an advertising server **145**. Advertising content **140** may include advertisements encoded in a variety of multimedia formats. For example, advertising content **140** may be in any one of a number of known formats for multimedia files such as formats according to standards promulgated by the joint photographic experts group (JPEG), the motion picture experts group (MPEG), etc., or some other format, such as known formats for audio content, such as waveform audio format (WAV), MPEG-1 Audio Layer 3 (MP3), etc. Further, advertising content **140** is likely associated with advertising metadata **141** sufficient to identify particular items of advertising content **140**, e.g., according to advertisers, categories of

advertisement, rate paid for the advertisement, subject matter of the advertisement, geographic association of the advertisement, etc.

Advertising server **145** provides advertising content **140** in response to requests, e.g., from mixing server **130**. Such requests may include as parameters information from a custom channel profile **160** or some other source of targeted advertising profile information.

Media content **155** is provided by content sources **135**. Media metadata **150** includes information about media content **155**. Media metadata **150** and media content **155** may be stored in a media database **156**, e.g., a relational database or the like. Content sources **135** may include a wide variety of sources for multimedia content **155**. Accordingly, for a particular item of media content **155**, media metadata **150** may include values for a wide variety of attributes. Such attributes may include, for example, the identity of a content source **135**, the type of media content **155**, e.g., video, audio, etc., a date associated with media content **155**, a geographic location associated with media content **155**, a subject matter associated with media content **155**, e.g. sports, news, weather, entertainment, etc., one or more keywords associated with the multimedia content **155**, etc.

In one embodiment, an individual media content item **155** may contain content pertaining to a single, specific topic. For example one media content **155** item could be a video clip for a specific news story, while another item of media content **155** could be a video clip for another story. A third item of media content **155** could contain a video clip for a specific segment of a popular television show (e.g., David Letterman's Top Ten), etc. Accordingly, a fresh set of media content **155**, e.g., new video clips, could be made available in media database **156** on a periodic, e.g., daily, basis. In addition, each clip may be relatively short in duration, e.g., less than 5 minutes, and may contain content **155** specific to a relatively narrow, well defined topic. Further, the useful lifespan of a given item of media content **155**, e.g., a video clip, might be relatively short (e.g., 24 hours), since older items will eventually be replaced by newer, more relevant items. It is to be understood that embodiments involving items of media content **155** having longer duration and/or longer useful lifespans are also contemplated.

Media content **155** may be in any one of a number of multimedia formats, e.g., the formats mentioned above with respect to advertising content **140**. Media content **155** is generally associated with a unique identifier according to which a particular file of media content **155** may be stored, retrieved, associated with media metadata **150**, etc. Media content **155** and media metadata **150** may be stored in separate databases, a single database, on separate servers, on a single server, etc. It is to be understood that media content **155** and media metadata **150** may be stored and associated in a relational format, according to various file systems that accommodate multimedia data, or various software packages for storing and providing multimedia data.

Custom channel profiles **160** may be created and stored in association with a profile server **165**. The purpose of a profile **160** is to provide criteria for selecting media content **155** to be included in a given custom media channel **170** for a user, as well as to provide other policy control information related to the retrieval and playback of a channel **170**. Accordingly, profile **160** may include information by which media metadata **150** may be queried, and according to which it may be determined whether an item of media content **155** meets criteria specified in custom channel profile **160**. Criteria for selecting media content **155** may include categories of content **155** in which a user is interested, e.g., news, sports, weather, etc. Other information relevant to retrieval and playback of the channel **170**, e.g., control information, may include a specification of a playback mode for the channel **170**. i.e., whether the channel **170** is to be played back without interruption between clips of content **155**, whether the channel **170** should allow control such as is supported by Real-time Streaming Protocol (RTSP) to allow skipping between clips of content **155**, pausing or stopping playback of the channel **170**, etc.

A custom channel profile **160** and a custom media channel **170** have a one-to-one relationship, according to certain embodiments. However, embodiments are possible in which a single profile **160** is used to define and manage control information associated with multiple custom media channels **170**. For example, a particular user or a particular content processing device **110** may be supported by a single profile **160**, i.e., all custom media channels **170** associated with the user or content processing device **110** may be governed by a single profile **160**.

Further, embodiments are possible that include different types of profiles **160** that efficiently encode information that applies to both individual custom media channels **170** and groups of custom media channels **170**. For example, a playback profile **160** may specify available playback options, e.g., a playback profile **160** may specify whether a user may skip between items of media content **155** included in the custom media channel **170**, whether the user may fast-forward through items of advertising content **140**, etc. A playback profile **160** then may be linked to multiple custom media channel profiles **160** for channels **170** having different content selection criteria but sharing a set of playback rules. When combined, such multiple profiles **160** together may specify the behavior of the channels **170** as well as the criteria for selecting content for such channels **170**.

A custom channel profile **160** is generally created by a user of computer **105** accessing profile server **165** through network **125**. However, embodiments are also possible and likely in which content processing device **110** is used to create, modify, and/or delete profiles **160**. Moreover, some or all of profiles **160** may be created by a provider of profile server **165**. For example, a user of content processing device **110** may not be provided with the opportunity to specify playback modes, although playback modes may be specified by a provider of profile server **165**, generally also the provider of content processing device **110** and video distribution network **126**.

Various playback modes are possible, including an "interactive" mode in which a user would see a menu listing particular items of media content **155** in a custom media channel **170**, e.g., organized according to categories of items of media content **155**, thereby allowing a user to select a particular item of media content **155** much as a user could select a particular track from a compact disk (CD) or digital video disk (DVD). Another playback mode provides "continuous play" of content from a custom media channel **170**, i.e., a user would see all content **155** from a given custom media channel **170** specified in an order determined according to a fixed policy or policy information specified in the profile **160** associated with the channel **170**. Yet another playback mode is a variation of the "continuous play" playback mode in which a user has the option to use controls such as "skip," "fast-forward," "pause," "return to menu," etc. such as may be enabled by real-time streaming protocol (RTSP). Further, in this variation of the "continuous play" mode, "skip commands" and the like are possible that cause a skip not just from one item of media content **155** to another, but from one category of media content **155** to another, i.e., from an item in a first category to an

item in a second category, or even from one custom media channel **170** to another customer media channel **170**.

In any event, profile server **165** generally provides a graphical user interface (GUI) through which a user may provide information for a profile **160**. Such information generally includes a username and may include other identifying information along with information concerning topics of interest to the user. For example, a profile **160** may include fields corresponding to fields stored in metadata **150**, e.g., the identity of one or more content sources **135** of interest to a user, specific programming or media files associated with a content source **135** of interest to the user, one or more types of media content **155** of interest to the user, dates or time periods that a content source **135** is of interest to a user, geographic locations of interest to the user, subject matter categories of interest to the user, and one or more keywords to provide for keyword searches or queries to locate media content **155** of interest to a user.

Computing devices such as computer **105**, content processing device **110**, VOD server **120**, mixing server **130**, etc. may employ any of a number of computer operating systems known to those skilled in the art, including, but by no means limited to, known versions and/or varieties of the Microsoft Windows® operating system, the Unix operating system (e.g., the Solaris® operating system distributed by Sun Microsystems of Menlo Park, Calif.), the AIX UNIX operating system distributed by International Business Machines of Armonk, N.Y., and the Linux operating system. Computing devices may include any one of a number of computing devices known to those skilled in the art, including, without limitation, a computer workstation, a desktop, notebook, laptop, or handheld computer, or some other computing device known to those skilled in the art. Content processing device **110** generally is a specialized device for receiving video signals **128** from head end **127** via network **126**, and may be provided with a proprietary or specialized operating system other than those enumerated above. For example, in one embodiment, content processing device **110** is an STB provided with a real time operating system (RTOS) such as is known. However, it is to be understood that content processing device **110** may be a computing device such as one of those enumerated above, so long as the computing device is capable of executing instructions as described herein.

Computing devices such as computer **105**, content processing device **110**, servers **120** and **130**, etc. generally each include instructions executable by one or more computing devices such as those listed above. Computer-executable instructions may be compiled or interpreted from computer programs created using a variety of programming languages and/or technologies known to those skilled in the art, including, without limitation, and either alone or in combination, Java™, C, C++, Visual Basic, Java Script, Perl, etc. In general, a processor (e.g., a microprocessor) receives instructions, e.g., from a memory, a computer-readable medium, etc., and executes these instructions, thereby performing one or more processes, including one or more of the processes described herein. Such instructions and other data may be stored and transmitted using a variety of known computer-readable media.

A computer-readable medium includes any medium that participates in providing data (e.g., instructions), which may be read by a computer. Such a medium may take many forms, including, but not limited to, non-volatile media, volatile media, and transmission media. Non-volatile media include, for example, optical or magnetic disks and other persistent memory. Volatile media include dynamic random access memory (DRAM), which typically constitutes a main memory. Transmission media include coaxial cables, copper wire and fiber optics, including the wires that comprise a system bus coupled to the processor. Transmission media may include or convey acoustic waves, light waves and electromagnetic emissions, such as those generated during radio frequency (RF) and infrared (IR) data communications. Common forms of computer-readable media include, for example, a floppy disk, a flexible disk, hard disk, magnetic tape, any other magnetic medium, a CD-ROM, DVD, any other optical medium, punch cards, paper tape, any other physical medium with patterns of holes, a RAM, a PROM, an EPROM, a FLASH-EEPROM, any other memory chip or cartridge, a carrier wave as described hereinafter, or any other medium from which a computer can read.

Databases such as databases **142**, **156**, etc. may include a file system on a file server, a relational database management system (RDBMS), etc. An RDBMS generally employs the well known Structured Query Language (SQL) in addition to a language for creating, storing, editing, and executing stored procedures. Other kinds of databases are also possible, such as a hierarchical database, an application database in a proprietary format, etc. Databases **142**, **156**, etc. generally includes a computing device employing a computer operating system such as one of those mentioned above, and may be accessed via a network such as network **125** or some other network, such as a local area network (LAN), wide area network (WAN), etc.

FIG. **2** illustrates an exemplary custom media channel **170** and an exemplary playlist **205**. As seen in FIG. **2**, a custom media channel **170** includes advertising content **140** and media content **155**, generally assembled and provided to content processing device **110** according to playlist **205**. Custom media channel **170** is generally associated with a playlist **205**, as illustrated in FIG. **2**. In general, the particular advertising content **140** and/or media content **155** included in custom media channel **170** depends at least in part on a custom channel profile **160** associated with a custom media channel **170**. Creation of custom media channels **170**, and heuristics according to which particular advertising content **140** and media content **155** are included in custom media channel **170** are discussed further below.

Playlist **205** determines an order in which items of advertising content **140** and media content **155**, e.g., files stored in databases **142** and **156**, may be provided in custom media channel **170**. A custom media channel **170** may include multiple multimedia files that are retrieved by mixing server **130** from databases **142** and/or **156** and sequentially streamed, as a single custom media channel **170**, to content processing device **110** or computer **105**, possibly in response to a user request for a custom media channel **170** on a real-time or near real-time basis. Accordingly, a custom media channel **170** may include different kinds of multimedia files, e.g., MPEG files and JPEG files, etc. However, in some embodiments—especially those that involve downloading the content of a custom media channel to a device for temporary storage and later, possibly offline, access—a custom media channel **170** may be instantiated as a single multimedia file, e.g., an MPEG file, created by aggregating or concatenating various items of advertising content **140** and/or media content **155**. In these embodiments, the package of information that constitutes the custom media channel could include both a set of content elements comprised of media content **155** and advertising content **140**) as well as other control information such as a playlist **205** and other associated control data.

To specify the particular items of media content **155** and/or advertisements **140** included in custom media channel **170**, and the order in which such files are provided, playlist **205**

includes an ordered list of reference pointers **210** to items of media content **155** and advertising content **140**. Such pointers **210** may be associated with media metadata **150** and/or advertising metadata **141** stored as part of playlist **205** sufficient to identify a source location for an item of media content **155** or similar information for advertising content **140**. Such source location may be within one of databases **142** or **156**, which generally collect advertisements **140** and media content **155** respectively for inclusion in custom media channels **170**. However, embodiments are also possible and contemplated in which such source location is a content source **135**, which may be virtually any source for multimedia content accessible through network **125**. For example, a pointer **210** could include a uniform resource locator (URL) or the like for locating and retrieving an item of media content **155** via network **125**. Also, source location references may also refer to files stored on DVR **112**. Further, metadata **150** and **141** in playlist **205** may be used to generate a menu of items of media content **155** and to allow a user to select, skip, etc. items of media content **155** included in channel **170**. Moreover, in certain embodiments, playlist **205** may distinguish between media content **155** and advertising content **140**. Accordingly, policy control information may be included in playlist **205** to specify how and when to dynamically mix media and advertising content. Thus, advertising content **140** may to be provided according to various rules, e.g., a frequency-based rule (e.g., every 3rd item), a rate based rule (e.g., play advertising content **140** commanding higher rates first), etc., instead of according to a strictly order-based regimen.

As discussed further below, playlist **205** is generally generated upon a user request for custom media channel **170**. That is, when content processing device **110** sends a request for a custom media channel **170** to mixing server **130**, playlist **205** is generated and used to retrieve, e.g., from databases **142** and/or **156**, and deliver to content processing device **110**, items of media content **155** and/or advertisements **140**, i.e., multimedia files, included in custom media channel **170**. Further, a custom media channel **170** and/or a playlist **205** may be created according to a schedule implemented in mixing server **130**. For example, playlist **205** may be downloaded to DVR **112**, e.g., when content processing device **110** is powered on and/or attempts to connect to network **125**, whereupon playlist **205** may be stored to await user access of custom media channel **170**. In another embodiment, after being created according to a schedule, custom media channel **170** is stored within mixing server **130** or an associated database and streamed to content processing device **110** upon the demand of a user. Alternatively, after being created according to a schedule implemented in mixing server **130**, custom media channel **170** may be downloaded to content processing device **110** and stored in DVR **112**, from which it may be retrieved upon the demand of the user. Custom media channels **170** accordingly could be downloaded in their entirety or as a series of incremental updates. Yet further alternatively, DVR **112** could be provided with instructions by mixing server **130** to record particular channels from network **126** at particular times, without requiring media content **155** to be download from mixing server **130**.

Further, in some embodiments, playlist **205** is generated on a scheduled basis, and includes information for retrieving from a source or sources such as databases **142** and **156** specific multimedia files representing advertising content **140** and/or media content **155** to be provided in custom media channel **170**. Accordingly, when content processing device **110** sends a request for a custom media channel **170** to mixing server **130**, playlist **205** may be used to retrieve and stream to content processing device **110** files included in custom media channel **170**. Creation, storage, and access of custom media channels **170** are discussed in further detail below with respect to FIGS. **3-5**.

FIG. **3** illustrates an exemplary process **300** for creating a custom media channel profile **160**.

In step **305**, a user logs in to profile server **165**. In this step, the profile server **165** performs operations to verify the identity of the user and the user's rights to manipulate one or more custom media channel profiles **160**. Generally the user, via computer **105**, accesses profile server **165** through packet switched network **125**. Profile server **165** generally provides a user interface such as a graphical user interface (GUI) through which the user may interact with profile server **165**. For example, network **125** may include the Internet, and profile server **165** may be accessed via the World Wide Web. Upon accessing a webpage provided by profile server **165**, which webpage is displayed on a display of computer **105**, the user may provide a username and password that had previously been provided to the user and stored in profile server **165**, thereby allowing the user to be logged in to profile server **165**. Other identification credentials besides a username and password may also be used instead. It is also possible that a user account may be created in step **305** according to a password, personal identification number, or the like provided to the user, or that a user account may be created in a separate process, validated by a provider of profile server **165**, wherein the user may then log in to profile server **165** as described herein. Further, a user accessing profile server via content processing device **110** could be automatically logged in to profile server **165** according to a unique or substantially unique identifier stored in content processing device **110**.

Next, in step **310**, profile server **165** provides a user interface, e.g., a webpage or some other GUI, which allows the user to create a new channel profile **160**, or to select a pre-existing profile **160** to modify. If a pre-existing profile **160** is selected, then profile server **165** retrieves information related to the profile **160** from persistent storage in preparation for displaying such information to the user.

Next in step **315**, the profile server **165** may generate a user interface that includes a form or the like that includes fields for displaying and updating information for profile **160**. Examples of fields that may be included in a custom channel profile **160** are discussed elsewhere herein, e.g., below with respect to step **320**.

Next, in step **320**, the user provides information for profile **160**, e.g., by entering information in one or more fields in a webpage provided as described above with respect to step **315**. For example, the user may indicate an interest in receiving a particular media file or set of media files every time the file or files are updated in a content source **135**. Similarly, the user may indicate an interest in receiving content broadcast from a particular content source **135** on a particular day at a particular time. However, information provided for profile **160** may be less specific. For example, a user may simply specify subject matter of interest or keywords associated with media of interest to the user. To take an example, a baseball fan could indicate the keyword "baseball" possibly along with the name of a team, or perhaps could select the sport of baseball and/or a team name from a menu, drop-down list, or the like. In yet another example, a user could specify key words or categories related to news topics of interest to the user. For example, the user could specify an interest in categories listed in the webpage that included world news, business news, political news, agriculture news, etc., along with key words such as the name of a celebrity, a sports team, a city, etc.

Further in step **320**, having specified categories or particular items of media content **155** to be included in the playlist **205**, a user may also specify an order in which such categories or items of media content **155** are to be presented in playlist **205**. For example, a user might specify that sports media content **155** should be presented prior to weather media content **155**, which in turn should be presented prior to news media content **155**.

Step **320** may be executed for a particular user with respect to more than one profile **160**; that is, a particular user may be associated with multiple profiles **160**. Having multiple profiles **160** would, among other things, allow the user to define multiple custom media channels **170**, i.e., one associated with each profile associated with the user. However, it is also possible have multiple custom media channels **160** defined by a single profile **160**.

Next, in step **325**, the user clicks a button or the like to indicate submission of the information for profile **160** provided as described above with step **320**, whereupon profile server **165** stores the newly created or updated profile **160**. As mentioned above, custom channel profile **160** is generally stored in a relational database or the like associated with or included in profile server **165**. Accordingly, a custom channel profile **160** may be one or more records in one or more tables in a relational database, such records generally identified by an identifier associated with a user. In any event, as illustrated in FIG. **1**, custom channel profiles **160** are generally accessible by mixing server **130**.

Following step **325**, process **300** ends. It is to be understood that process **300** provides only an illustrative example of how a custom channel profile **160** could be created and managed. Certainly other variations are possible. Moreover, custom media channel profile **106** configuration data need not be organized along the lines of individual custom channels, but could be organized according to other schemes or may be embedded within other profile data structures (e.g., an overall user profile), as mentioned above.

FIG. **4** illustrates an exemplary process **400** for instantiating one or more custom media channels **170**.

In step **405**, mixing server **130** receives an instruction, e.g., a message triggering it to create one or more custom media channels **170** based on one or more custom channel profiles **160**. In some embodiments, the trigger to create a custom media channels **170** results from a user request to access the channel **170**. That is, a playlist **205** may be generated and a custom media channel **170** may be created in real-time or near real-time when a user "tunes" to the channel **170** or otherwise selects the channel **170** for viewing through playback device **115**. Creating and delivering custom media channel **170** in real-time or near real-time based on the custom channel profile **160** allows for not only providing the user with customized content, but also for providing the user with the most up-to-date content. Further, creating and delivering custom media channel **170** in real-time or near real-time means that computer and network resources are not unnecessarily consumed creating and storing custom media channels **170** that a user might never access, or that might become out-of-date before a user accesses access them.

Embodiments are also possible in which a custom media channel **170** is created and stored prior to a user's request to access the channel **170**. For example, mixing server **130** could receive a message from profile server **165** that a custom channel profile **160** has been created or revised. Similarly, mixing server **130** could receive a message that media content **155** had been updated, or that new media content **155** was available. Alternatively, mixing server **130** may be programmed to query media metadata **150** at predetermined intervals, e.g., once every 3 hours, twice per day, etc., to determine any changes to media content **155** relevant to a profile **160**. For example, media metadata **150** may include a timestamp or the like in addition to other identifying information according to which a query from mixing server **130** may determine whether new or revised media content **155** is available.

Various mechanisms that may be used for sending and receiving messages to and from mixing server **130** are known, e.g., a database trigger in a database storing profiles **160** may cause a message for mixing server **130** to be sent to a queue manager such as IBM WebSphere MQ sold by International Business Machines Corp. of Armonk, N.Y., which in turn queues and sends messages to mixing server **130**. Receipt of the message may then cause mixing server **130** to invoke a process for creating or modifying one or more custom media channels **170** based on a profile **160** provided in the message.

Next, in step **410**, mixing server **130** analyzes the custom channel profile **160** received in step **405** to formulate a query of media metadata **150**. As mentioned above, media metadata **150** may be stored in a relational database associated with or included in mixing server **130**. A variety of queries of media metadata **150** are possible based on a profile **160**. For example, if a profile **160** indicates a particular content source **135** and further indicates particular days and times of interest with respect to the content source **135**, the query formulated in step **410** includes as parameters the indicated content source **135** in the indicated days and times of interest to determine if any media, e.g., a video file or files, is available from the indicated content source **135** at the indicated days and times. Similarly, if a profile **160** indicates a particular subject of interest, e.g., sports or a particular keyword, e.g., "baseball," then the subject of interest or keyword may be parameters for the query. It is also possible, as discussed further with reference to step **440** below, that multiple queries of media metadata **150** may be formulated based on a profile **160**.

In some embodiments, step **410** also includes formulating a query for advertising metadata **141**. Including advertising content **140** in a custom media channel **170** advantageously provides additional revenue opportunity for a provider of system **100**. A query for advertising content **140** may be formulated in the same general manner as described above with reference to a query for media metadata **150**. That is, it may be desirable to tailor advertising content **140** according to information in profile **160**. However, it is also possible for advertising content **140** to be selected according to some other criteria, for example, according to a number of insertions that an advertiser has paid for, according to a random selection, etc. Advertising content **140** could also be selected based on user data external to profile **160**, such as a separate user profile maintained specifically for identifying and associating with users advertising content **160**. Such a profile might contain demographic information such as a user's location, services subscribed to, etc.

Further, embodiments are possible and likely in which advertising content **140** is inserted into custom media channel **170** after process **400** is complete. For example, a number of items of advertising content **140** to be inserted into custom media channel **170** may be determined according to an overall length of custom media channel **170**, it may be selected in inserted at appropriate intervals into custom media channel **170** after custom media channel **170** is complete.

Next, in step **415**, mixing server **130** executes the query or queries, e.g., for media content **155** and advertising content **140**, formulated in step **410**. It is to be understood that mixing server **130** may effectively execute the query for metadata

150 by providing it to a relational database or the like including metadata 150 that is associated with mixing server 130. A query for advertising content 140 may be provided to advertising server 145. Such queries may be provided in a number of formats, e.g., structured query language (SQL), as parameters in a uniform resource locator (URL), etc.

Next, in step 420, mixing server 130 receives results of the query or queries executed in step 415, and evaluates the results to determine if the query results identify any media content 155, e.g., any video file or files. If the query executed in step 415 does not return any media metadata 150 associated with media content 155, then process 400 proceeds to step 422. However, if media content 155 is identified in the query executed in step 415, then process 400 proceeds to step 425.

Mixing server 130 may also determine whether any advertising content 140 has been returned as the result of a query executed in step 415, if a query for advertising content 140 was executed. However, determination of step 420 generally focuses solely on whether any media metadata 150 has been returned, because it is generally not desirable to create a custom media channel 170 including only advertising content 140. Further, as discussed above, advertising content 140 may be inserted into custom media channel 170 after process 400 is complete. Nonetheless, it is to be understood that embodiments are possible in which the determination of step 420 may include a consideration of whether any advertising content 140 has been identified.

In step 422, mixing server 130 generates what is referred to as an "empty playlist," i.e., a playlist 205 that does not include any pointers 210 to media content 155. Generally such a playlist 205 causes content processing device 110 to generate a message informing a user that no media content 155 presently satisfies criteria for the requested custom media channel 170. Following step 422, process 400 ends.

In step 425, mixing server 130 uses the media metadata 150 and/or advertising content 140 returned in step 420 to generate a list of media content 155 and/or advertising content 140 to be included in a custom channel 170 based on custom channel profile 160. Information from profile 160 may be used to generate the playlist 205. For example, profile 160 may include an indication that media content 155 relating to a first category of media content, e.g., sports, is of more interest to a user than media content 155 relating to a second category, e.g., weather. Thus, the order of media content 155 reflected in playlist 205 may be at least partly determined by profile 160.

Further, profile 160 may include records providing a history of items of media content 155 that a user has viewed in a custom media channel 170. Such records may be useful in order to avoid including in a custom media channel 170 an item of media content 155 that was previously provided to the user in a channel 170. Further, history records may be used to provide special treatment for items of media content 155 that have previously been included in a custom media channel 170. For example, such items of media content 155 could be flagged as "Previously Viewed" or the like in playlist 205, which flag could be communicated to the user through playback device 115, e.g., in a menu, in a message displayed over or next to a playback of custom media channel 170, etc., thereby allowing the user to skip playback of such item of media content 155 if desired.

Next, in step 430, mixing server 130 determines an order for the media listed in step 425. For example, as mentioned above, a profile 160 may indicate a ranking of a user's interest in certain topics. For example, a user may be interested in receiving baseball news, but may be most interested in a particular team, such as the Detroit Tigers. Accordingly, a custom media channel 170 may provide files having to do with the general topic, e.g., baseball, but may provide files relating to the particular team of interest, e.g., the Detroit Tigers, first.

Further, rules may be implemented to determine the frequency with which advertising content 140 is interspersed with media content 155 in a custom media channel 170. In general, it is desirable to maximize revenue for the provider of system 100 and/or the operator of mixing server 130, all the same time not providing so much advertising content 140 so as to cause the user to discontinue use of the custom media channel 170. Accordingly, it is possible and even likely that some of the advertising content 140 that may have been returned in step 420 will not be included in the custom media channel 170. Like media content 155, advertising content 140 may be included in a custom media channel 170 according to a variety of heuristics, e.g., random selection, ranking according to topical association, ranking according to the rate or rates paid by an advertiser, etc.

Next, in step 435, mixing server 130 generates a playlist 205 based on the query results listed an ordered as described above with reference to steps 425 and 430.

Next, in step 440, mixing server 130 delivers e.g., isochronously streams or progressively downloads, media content 155 and/or advertising content 140 to content processing device 110. Generally, according to playlist 205, content 155 and/or advertisements 140 are retrieved from databases 142 and/or 156 on a real-time or near real-time basis, that is, when needed as part of a custom media channel 170. However, as noted above, pointers 210 in playlist 205 could be used to indicate a wide variety of content sources 135. Alternatively, or possibly also at the same time, mixing server 130 stores and/or bundles and downloads to a content processing device 110 the custom media channel or channels 170 created by one or more executions of steps 415 through 435. In cases where there is limited storage available on the mixing server 130 and/or on DVR 112 and its associated storage/memory, playlist 205 may be only stored in either mixing server 130 or DVR 112 in step 440. In these cases, as described further below with respect to process 500, mixing server 130 uses playlist 205, including pointers 210, to retrieve and deliver to content processing device 110 multimedia files included in custom media channel 170. Further, storing custom media channels 170 generally means storing the multimedia file or files included in the custom media channel 170 in a database, a file system, or the like, to be made available when a particular user requests the custom media channel 170, as described further below with reference to FIG. 5. Accordingly, as discussed above, a single multimedia file may be stored in a database associated with mixing server 130 or may be downloaded to content processing device and stored in DVR 112. Further, multiple multimedia files to be included in custom media channel 170 may be stored in either mixing server 130 or DVR 112, the order in which such files are provided to a user being governed by playlist 205.

Following step 440, process 400 ends.

FIG. 5 illustrates an exemplary process 500 for controlling access to and interaction with one or more custom media channels 170. It should be understood that custom media channels 170 may be accessed through virtually any computing device having access to packet switched network 125, or otherwise having access to mixing server 130. Accordingly, process 500 may apply to access of custom media channels 170 by either a computer 105 or a content processing device 110. It should also be understood that process 500 represents one exemplary process for interacting with custom media channels 170 and that other variations are possible for access-

ing, navigating, and interacting with one or more custom media channels. For example, FIGS. **6** and **7**, discussed below, illustrate exemplary process **600** and **700** respectively that are each largely variations of certain of the steps in process **500**. However, these are but two variations, and many other variations are possible.

Further, as mentioned above, one or more custom media channels **170** may be downloaded to content processing device **110** and stored within DVR **112** (or other storage device) to await a user request for custom media channels **170**. Custom media channels **170** could similarly be downloaded to computer **105**. Therefore, in some embodiments, a client device such as computer **105** for content processing device **110** need not be connected to network **125** at the time a user requests access to a custom media channel **170**.

Process **500** is generally performed by a playback application that may be executed within client **105**, content processing device **110**, or mixing server **130**. The playback application may be stored on a computer readable medium and is generally responsible for receiving a user request for a custom media channel **170**, and for providing the custom media channel **170** for playback on player **115**, computer **105**, etc.

In step **505**, a user logs in to the playback application. This login may be accomplished in several different ways, or skipped. For example, a user accessing control **111** may select a channel in content processing device **110** associated with a custom media channel **170** or may navigate an interactive program guide to access an area of the program guide's menu structure dedicated to custom media channels. Further, a user of computer **105** may navigate to a webpage, a screen or window in a software application that plays multimedia files, or the like that displays an interface for logging in to mixing server **130**, or may select a webpage or a link in a webpage associated with a custom media channel **170**. Content processing device **110** or computer **105** may include program instructions for displaying an interface prompting a user to enter a pass code or some other unique user identifier using control **111**. Content processing device **110** or computer **105** may then validate this input, or, in embodiments in which the playback application is located on mixing server **130**, this input may then be transmitted to mixing server **130**.

Alternatively, content processing device **110** or computer **105** may include program instructions for validating an input, or for transmitting an identifier to mixing server **130**, without any user input. In this case, all users of content processing device **110**, computer **105**, etc. are effectively treated as a single user. Moreover, the user may not even be aware that step **505** has been executed. In any event, it should be understood that, although not shown in FIG. **5**, process **500** will be terminated in the event that an attempt to log in (authenticate and authorize the user) is unsuccessful.

Next, in step **510**, once a user's login information has been validated, the playback application may provide a menu of custom channel options to be displayed to the user. For example, such a menu may be provided to content processing device **110** and displayed on media player **115**. Similarly, a menu may be provided as a webpage or the like to computer **105** through packet switched network **125**. If the playback application is located within content processing device **110** or computer **105**, the menu may be provided or updated anytime when custom media channels **170** are provided or updated. Alternatively, the playback application may include instructions for constructing a menu based on one or more playlists **205**.

The menu displayed in step **510** may provide a variety of options. For example, this menu may be a simple, single-layer menu, or it may be a relatively complex, multi-layer menu structure. For example, the menu may provide the user with the option to administer custom media channels **170**, i.e., to create or modify a custom channel profile **160**. In addition, the menu may provide the user with the option of playing one or more custom media channels **170**. The menu may list custom media channels **170** in a variety of ways. For example, custom media channels **170** may be listed according to names or identifiers selected by a user when creating channel profiles **160**. Further, custom media channels **170** may be listed according to attributes, e.g., categories, from profile **160** associated with a custom media channel **170**, e.g., "baseball," "weather," etc. Alternatively, custom media channels **170** may be organized into other groups or structures (e.g., organized based by user or user profiles). Finally, as noted above, particular items of media content **155** included in a custom media channel **170** may be listed in the menu displayed in step **510**. Accordingly, embodiments are possible and likely in which a user may interactively browse and select one or more clips, i.e., items of media content **155**, for playback from the playlist of a media channel **170** as rendered via the menu displayed in step **510**.

From the foregoing it should be clear that a user may select a menu option by navigating with arrow keys or the like using control **111** to highlight options displayed on media player **115**, selecting a number on a numeric keypad on control **111**, by selecting a link in a webpage displayed on computer **105**, etc. If the playback application is located on mixing server **130**, the user's selection of a menu option may be transmitted to mixing server **130** in a variety of ways. For example, a user's selection may be transmitted from computer **105** to mixing server **130** using known protocols such as hypertext transfer protocol (HTTP). Further, extensions to RTSP are possible for allowing selection of menu options to be provided to mixing server **130** from content processing device **110**.

Next, in step **515**, the playback application determines whether a request for an administrative menu option has been received. If so, the user may be redirected to profile server **165** to administer one or more profiles **160**, e.g., as described above with respect to step **310**, or some other mechanism for administering channel profiles **160**, e.g., an application on content processing device **110** or computer **105**, may be invoked. If no request for an administrative menu option has been received, process **500** proceeds to step **520**.

Next, in step **520**, the playback application determines whether a request for a custom media channel **170** has been received. If not, process **500** proceeds to step **525**. However, if a request for a custom media channel **170** has been received, process **500** proceeds to step **530**. Moreover, if a custom media channel **170** has been selected, and more specifically an individual item of content **155**, e.g., a clip, has been selected, information related to the selected item of content **155** is maintained for use in step **530** described below.

In one embodiment, step **505** is executed without any user input, and a request for a custom media channel **170** is received when a user accesses a particular video channel in content processing device **110** using control **111**. In this case, steps **510** and **515** may be skipped, and the playback application determines in step **520** that a request for the custom media channel **170** associated with the video channel has been received.

In step **525**, the playback application determines whether a request to exit the display of custom media channels **170** has been received. If so, process **500** ends. Otherwise, process **500** returns to step **510**.

In step **530**, the playback application delivers custom media channel **170** for display to the user, e.g., to content

processing device **110** or computer **105**. For example, custom media channel **170** may include one or more MPEG files, and content processing device **110** may include a coder/decoder (codec) for playing the MPEG files. In embodiments in which custom media channel **170** includes a plurality of multimedia files, such files may be stored in mixing server **130** or an associated database, and delivered according to playlist **205**. Alternatively in such embodiments, playlist **205** may be used to determine media content **155** to be included in custom media channel **170**, and to retrieve as needed such media content **155** from the appropriate database, e.g., a database associated with mixing server **130**. Such media content **155** may then be delivered to content processing device **110** according to an order provided by playlist **205**. If in step **510** the user specified a specific content **155** item for viewing, this information is used in step **530** to retrieve and playback the desired content **155** item.

As noted above with respect to step **440** and process **400**, media content **155** and advertising content **140** in custom media channel **170** may be delivered to content processing device **110** in a variety of ways. For example, as noted above, playlist **205** may be stored in DVR **112** and used to request media content **155** and/or advertising content **140** in custom media channel **170** when custom media channel **170** is requested by a user. Alternatively, both the playlist **205** and associated content **140** and **155** can be cached on the DVR **112** in advance of a user request for channel **170**. In such a scenario, media content **155** and/or advertising content **140** may be provided to DVR **112** according to any of a number of manners, including: (1) a unicast delivery, e.g., isochronous streaming or progressive download, from mixing server **130** via a packet switched network **125**; (2) a multicast delivery, e.g., a reliable multicast download such as is known from mixing server **130** via a packet switched network **125**, this approach affording better utilization of network **125** by allowing a single multicast flow to be used by multiple endpoints, e.g., content processing devices **110**, to receive content as opposed to using multiple unicast (point-to-point) flows of media content **155** and/or advertising content **140** to individual content processing devices **110**; (3) receiving video content from broadcast/multicast video streams distributed via video distribution network **126**; and (4) receiving content **155** and/or **140** via video distribution network **126** as unicast streams.

Next, in step **535**, the playback application determines whether input has been received from the user during the play of custom media channel **170**. In general, where the playback application is located on mixing server **130**, functionality may be provided with respect to custom media channel **170** similar to that provided for VOD content **121** provided by VOD server **120**. As with VOD server **120**, messages to and from mixing server **130** may be sent according to RTSP. However, other signaling protocols could also be used. If input has been received, then process **500** proceeds to step **545**. Otherwise, step **540** is executed next.

In step **540**, the playback application determines whether the end of custom media channel **170** has been reached or when being used in an interactive mode, if the end of the current content item **155** (clip) has been reached. As noted with respect to FIG. **2**, custom media channel **170** may be a multimedia file or set of multimedia files, and this determination may therefore involve determining whether an end of file has been reached, and, in embodiments where custom media channel **170** includes multiple multimedia files, determining whether any additional files are referenced in playlist **205**. If the end of custom media channel **170** has not been reached, process **500** returns to step **530**. However, if the end of custom media channel **170** has been reached, then process **500** returns to step **510**. Alternatively, when channel **170** is accessed in an interactive mode such as is illustrated in FIG. **7**, discussed below, if the end of the current content **155** item, e.g., a video clip, has been reached, then process **500** returns to step **510**. By returning to step **510**, the process **500** allows the user to select another item of content **155** when used in interactive mode, select another channel **170**, or perform administrative operations, e.g., as illustrated in FIG. **3**, discussed above.

In step **545**, the playback application determines whether the input received in step **535** is a command to stop or pause playback of custom media channel **170**. If so, step **550** is executed next. Otherwise, step **555** is executed next.

In step **550**, the playback application stops or pauses playback of custom media channel **170**. Process **500** then returns to step **535** to await a command to resume playback or to play custom media channel **170**.

In step **555**, the playback application determines whether the input received in step **535** is a command to resume a paused playback of media channel **170**, to play media channel **170** after playback has been stopped, or a command to skip to the next or previous item of media content **155** in a playlist **205**. If so, the command is executed, and process **500** returns to step **530**. Otherwise, process **500** proceeds to step **557**.

In step **557**, the playback application determines whether the input received in step **535** is a command to skip to an item of media content **155** belonging to a category of media content **155** other than a category that includes the item of media content **155** presently playing in media channel **170**. For example, a user may press a button on control **111**, e.g., an arrow key, a number, etc. to indicate a selection to move from a "sports" category to a "weather" category; or from the current category to the next category. Metadata **150** included in playlist **205** generally includes an identification of one or more categories that include media content **155** associated with the metadata **150**, thereby allowing for navigation within playlist **205** according to categories of media content **155**.

If the input received in step **557** is a command to skip to a content category other than the one that is currently playing, then the playback application updates its record of the current category to a new value, updates its record of the current item playing in the playlist, and returns to step **530** to play the new current item of media content **155** in the new current category associated with custom media channel **170**. Otherwise, process **500** proceeds to step **560**.

In step **560**, the playback application determines whether the input received in step **535** is a command to skip directly to a media channel **170** other than the media channel **170** that is presently playing. For example, the menu displayed in step **510** may indicate a plurality of custom media channels **170** that are available for playing, e.g., according to titles or other descriptions, categories of information, particular sources of media content **155**, specified keywords, etc. Pressing a key on control **111** or providing some other input may allow a user to specify that a different media channel **170** should be played. If the input received in step **560** is a command to skip directly to a media channel **170** other than the media channel **170** that is presently playing, then the playback application updates its record of the current channel and returns to step **530** to play the specified channel. Otherwise, process **500** proceeds to step **565**.

In step **565**, the playback application determines whether the input received in step **535** includes user feedback that may be used to update profile **160**. For example, while an item of media content **155** is being played, a portion of a GUI in playback device **115** that is used to display media channel **170**

may provide a user with the opportunity to provide feedback concerning the item of media content **155** being played. For example, a user may be instructed to press "1" on control **111** to indicate approval of the item of media content **155**, e.g., "show me more like this," and to press "2" on control **111** to indicate that the item of via content **155** is not to the users liking, e.g., "do not show me more like this." Similarly, a user may be provided with a rating scale or the like, e.g., "rate this clip on a scale of 1 to 5," according to which the user may provide feedback concerning an item of media content **155**. As mentioned above, user feedback may also be used to update media metadata **150** or the like. If the input received in step **535** is feedback that may be used to update profile **160**, then step **570** is executed next. Otherwise, step **575** is executed next.

In step **570**, the playback application causes the appropriate updates to be made to profile **160** and profile server **165**. This step could also be used to update other information sources. For example, a user profile indicating a user's interest in the channel **170** could be updated. Similarly, metadata **150** relating to items of media content **155** could be updated, e.g., a popularity rating for an item of content **155** could be updated. In general, various methodologies for gathering and reacting to user feedback may be used, so long as the user feedback results in a modification to custom media channels **170** provided to the user following the provision of user feedback. For example, if a user has indicated approval of a particular item of media content **155**, then the playback application may instruct profile server **165** to update profile **160** to note that items of media content **155** sharing metadata characteristics with the approved item of media content **155**, e.g., in a particular category or associated with a particular keyword associated with the approved item of media content, should be given priority according to the profile **160**. Similarly, profile **160** may be updated to reflect that items of media content **155** sharing metadata characteristics with a disapproved item of media content **155** should not be included in custom media channels **170** for the user.

In step **575**, the playback application determines whether the input received in step **535** is a command to return to the menu displayed as described above with respect to step **510**. If so, process **500** returns to step **510**. Otherwise, process **500** proceeds to step **580**.

Step **580** is depicted in the FIG. **5** as the only remaining possible input after the inputs described in steps **545-555** have been considered. However, it is to be remembered that process **500** is exemplary, and that other inputs and variations are possible. In any event, in step **580**, the playback application provides to content processing device **110**, computer **105**, etc. instructions for displaying and/or rendering on media player **115** what is referred to as an "overlay menu." An overlay menu is a menu that is similar to the menu displayed in step **510**, but which may include only a subset of the options available in the menu displayed in step **510**. The name "overlay menu" derives from the fact that the menu is overlaid on top of the playback of custom media channel **170** in the display of media player **115**, computer **105**, etc., so that a user may view the overlay menu while still viewing the custom media channel **170**. The overlay menu may include various options, e.g., options for viewing an administrative interface, for switching to another custom media channel **170**, for returning to an IPG menu, etc. Accordingly, step **515** may be executed following step **580**.

It is to be understood that some or all of steps **535** and **545** through **580** may be omitted or modified in certain embodiments. For example, in the embodiment mentioned above in which a request for a custom media channel **170** is received when a user accesses a particular video channel in content processing device **110** using control **111**, an input to control **111** to change the video channel, effectively stopping the playback of custom media channel **170**, may be the only possible input to the playback application while custom media channel **170** is being played.

As noted above, process **500** may end following step **525**.

FIG. **6** illustrates an exemplary process **600** for accessing a custom media channel **170** in a channel selection mode.

In step **605**, a user logs in to the playback application. Step **605** is identical or at least similar to step **505** described above with respect to FIG. **5**. Step **605** is followed by step **620**.

In step **620**, the playback application determines whether a request for a custom media channel **170** has been received, i.e., whether a user has selected a particular video channel in content processing device **110** using control **111** that is associated with a custom media channel **170**. If not, step **625** is executed next. Otherwise, step **630** is executed next.

In step **625**, the playback application determines whether a request to exit the display of custom media channels **170** has been received. If so, process **600** ends. Otherwise, process **500** returns to step **620**.

In step **630**, the playback application delivers custom media channel **170** for display to the user, e.g., to content processing device **110** or computer **105** in any of the manners described above with respect to step **530**.

Next, in step **635**, the playback application determines whether input has been received from the user during the play of custom media channel **170**, much as was described above with respect to step **535**. If input has been received, then process **600** proceeds to step **645**. Otherwise, step **640** is executed next.

In step **640**, the playback application determines whether the end of custom media channel **170** has been reached, much as described above with respect to step **540**. If the end of custom media channel **170** has not been reached, process **500** returns to step **630**. However, if the end of custom media channel **170** has been reached, then process **500** returns to step **620**.

In step **645**, the playback application determines whether the input received in step **635** is a command to stop or pause playback of custom media channel **170**. If so, step **650** is executed next. Otherwise, step **655** is executed next.

In step **650**, the playback application stops or pauses playback of custom media channel **170**. Process **600** then returns to step **635** to await a command to resume playback or to play custom media channel **170**.

In step **655**, the playback application determines whether the input received in step **635** is a command to resume a paused playback of media channel **170**, to play media channel **170** after playback has been stopped, or a command to skip to the next or previous item of media content **155** in a playlist **205**. If so, the command is executed, and process **600** returns to step **630**. Otherwise, process **600** proceeds to step **660**.

In step **660**, the playback application determines whether the input received in step **635** is a command to skip directly to a media channel **170** other than the media channel **170** that is presently playing, e.g., by selecting a different channel in content processing device **110**. That is, pressing a key on control **111** or providing some other input may allow a user to specify that a different media channel **170** should be played. If the input received in step **660** is a command to skip directly to a media channel **170** other than the media channel **170** that is presently playing, then the playback application updates its record of the current channel and returns to step **630** to play the specified channel. Otherwise, process **600** proceeds to step **665**.

In step **665**, the playback application determines whether the input received in step **635** includes user feedback that may be used to update profile **160**, much as described above with respect to step **565**. If the input received in step **635** is feedback that may be used to update profile **160**, then step **670** is executed next. Otherwise, step **675** is executed next.

In step **670**, the playback application causes the appropriate updates to be made to profile **160** and profile server **165**, much as described above with respect to step **570**. Following step **670**, process **600** returns to step **630**.

As noted above, process **600** may end following step **625**.

FIG. **7** illustrates an exemplary process **700** for accessing a custom media channel **170** in an interactive mode.

In step **705**, a user logs in to the playback application. Step **705** is identical or at least similar to step **505** described above with respect to FIG. **5**. Step **705** is followed by step **710**.

In step **710**, the playback application determines whether a request for a custom media channel **170** has been received, i.e., whether a user has selected a particular video channel in content processing device **110** using control **111** that is associated with a custom media channel **170**. If not, step **725** is executed next. Otherwise, step **715** is executed next.

In step **715**, a menu is displayed reflecting items of media content **155** included in the playlist **205** associated with the custom media channel **170** requested in step **710**. Accordingly, a user may select individual items of media content **155** for playback.

In step **720**, it is determined whether a user has selected an item of media content **155**, e.g., a video clip, for playback from the menu displayed in step **715**. If not, process **700** proceeds to step **710**. Otherwise, step **730** is executed next.

In step **730**, the playback application delivers the selected item of media content **155** from custom media channel **170** for display to the user, e.g., to content processing device **110** or computer **105** in any of the manners described above with respect to step **530**.

Next, in step **735**, the playback application determines whether input has been received from the user during the play of the selected item of media content **155**, much as was described above with respect to step **535**. If input has been received, then process **700** proceeds to step **745**. Otherwise, step **740** is executed next.

In step **740**, the playback application determines whether the end of the selected item of media content **155** has been reached, much as described above with respect to custom media channel **170** in step **540**. If the end the item of media content **155** has not been reached, process **500** returns to step **730**. However, if the end of the item of media content **155** has been reached, then process **500** returns to step **710**.

In step **745**, the playback application determines whether the input received in step **735** is a command to stop or pause playback of the item of media content **155**. If so, step **750** is executed next. Otherwise, step **755** is executed next.

In step **750**, the playback application stops or pauses playback of the item of media content **155**. Process **700** then returns to step **735** to await a command to resume playback or to play the item of media content **155**.

In step **755**, the playback application determines whether the input received in step **735** is a command to resume a paused playback of the item of media content **155**, or to play the item of media content **155** after playback has been stopped. If so, the command is executed, and process **700** returns to step **730**. Otherwise, process **700** proceeds to step **765**.

In step **765**, the playback application determines whether the input received in step **735** includes user feedback that may be used to update profile **160**, much as described above with respect to step **565**. If the input received in step **735** is feedback that may be used to update profile **160**, then step **770** is executed next. Otherwise, step **775** is executed next.

In step **770**, the playback application causes the appropriate updates to be made to profile **160** and profile server **165**, much as described above with respect to step **570**. Following step **770**, process **700** returns to step **730**.

In step **775**, the playback application determines whether the input received in step **735** includes a selection to return to a display of playlist **205**. If so, process **700** returns to step **715**. Otherwise, process **700** returns to step **730**.

As noted above, process **700** may end following step **725**.

Conclusion

With regard to the processes, systems, methods, heuristics, etc. described herein, it should be understood that, although the steps of such processes, etc. have been described as occurring according to a certain ordered sequence, such processes could be practiced with the described steps performed in an order other than the order described herein. It further should be understood that certain steps could be performed simultaneously, that other steps could be added, or that certain steps described herein could be omitted. In other words, the descriptions of processes herein are provided for the purpose of illustrating certain embodiments, and should in no way be construed so as to limit the claimed invention.

Accordingly, it is to be understood that the above description is intended to be illustrative and not restrictive. Many embodiments and applications other than the examples provided would be apparent to those of skill in the art upon reading the above description. The scope of the invention should be determined, not with reference to the above description, but should instead be determined with reference to the appended claims, along with the full scope of equivalents to which such claims are entitled. It is anticipated and intended that future developments will occur in the arts discussed herein, and that the disclosed systems and methods will be incorporated into such future embodiments. In sum, it should be understood that the invention is capable of modification and variation and is limited only by the following claims.

All terms used in the claims are intended to be given their broadest reasonable constructions and their ordinary meanings as understood by those skilled in the art unless an explicit indication to the contrary in made herein. In particular, use of the singular articles such as "a," "the," "said," etc. should be read to recite one or more of the indicated elements unless a claim recites an explicit limitation to the contrary.

What is claimed is:

1. A method, comprising:

determining, by one or more server devices and based upon prior selections of multimedia content by a user associated with a client device, one or more topics of interest to the user;

forming, by the one or more server devices, a plurality of profiles that are associated with a respective plurality of custom media channels, each profile of the plurality of profiles including:

users preferences, the user preferences including an indication of the one or more topics of interest to the user, and channel policy control information for a corresponding custom media channel of the respective plurality of custom media channels, the channel policy control information being related to retrieval and playback of the corresponding custom media channel, the channel policy control information including playback modes that include an interactive playback mode and a continuous play playback mode;

creating, by the one or more server devices, a custom media channel, of the plurality of custom media channels, based on a profile of the plurality of profiles,

the creating, by the one or more server devices, the custom media channel based on the profile including:

comparing each of a plurality of stored multimedia content to the profile,

identifying conforming multimedia content, of the plurality of stored multimedia content, that conforms with the one or more topics of interest to the user and with the channel policy control information,

determining respective storage locations associated with the conforming multimedia content, one or more conforming multimedia content, of the conforming multimedia content, being stored at the client device, and other conforming multimedia content, of the conforming multimedia content, being stored externally of the client device,

sorting the conforming multimedia content based on the user preferences and the channel control policy information associated with the custom channel,

providing, to the client device, a playback list identifying the sorted conforming multimedia content and the respective storage locations, the playback list enabling the client device to provide the sorted conforming multimedia content in an order associated with the sorted conforming multimedia content,

providing, to the client device, the other conforming multimedia content before the client device receives a request, from the user, for the custom media channel, and

updating the playback list based on providing the other conforming multimedia content;

receiving, by the one or more server devices and from the client device, an indication that the user, when viewing the custom media channel requested another custom media channel; and

updating, based on receiving the indication, the profile.

2. The method of claim **1**, further comprising:

identifying, based on the profile, advertising content of a plurality of advertising content;

including the advertising content in the provided custom media channel.

3. The method of claim **1**, where comparing each of the plurality of stored multimedia content to the profile includes:

accessing metadata relating to the plurality of stored multimedia content; and

comparing the metadata to the profile.

4. The method of claim **1**, where providing the playback list includes:

providing, to the client device, the playback list after receiving the request for the custom media channel, and where the client device is at least one of: a set-top box, a content processing device, a desktop computer, a laptop computer, or a handheld computer.

5. The method of claim **1**, where the client device and the one or more server devices are connected via a packet switched network.

6. The method of claim **1**, where updating the profile further comprises: updating the profile further based on at least one of: an input from the user, or prior selections of multimedia content by the user.

7. A non-transitory computer-readable medium to store instructions, the instructions comprising:

one or more instructions that, when executed by a processor of a computer device, cause the processor to identify one or more topics of interest to a user associated with a client device;

one or more instructions that, when executed by the processor, cause the processor to form a plurality of profiles associated with a respective plurality of custom media channels, each profile of the plurality of profiles: user preferences including an identifier of the one or more topics of interest to the user, and channel policy control information for a corresponding custom media channel of the plurality of custom media channels, the channel policy control information including playback modes that include an interactive playback mode and a continuous play playback mode; one or more instructions that, when executed by the processor, cause the processor to create a custom media channel, of the plurality of custom media channels, based on a profile of the plurality of profiles, the one or more instructions to create the custom media channel based on the profile including:

one or more instructions that, when executed by the processor, cause the processor to compare a plurality of stored multimedia content to the profile,

one or more instructions that, when executed by the processor, cause the processor to identify, based on comparing the plurality of stored multimedia content to the profile, conforming multimedia content, the conforming multimedia content being one or more of the plurality of stored multimedia content that conform to the one or more topics of interest to the user and the channel policy control information,

one or more instructions that, when executed by the processor, cause the processor to determine respective storage locations associated with the conforming multimedia content, one or more conforming multimedia content, of the conforming multimedia content, being stored at the client device, and other conforming multimedia content, of the conforming multimedia content, being stored externally of the client device,

one or more instructions that, when executed by the processor, cause the processor to sort the conforming multimedia content based on the user preferences and the channel policy control information,

one or more instructions that, when executed by the processor, cause the processor to provide, to the client device, a playback list identifying the conforming multimedia content and the respective storage locations, the playback list enabling the client device to provide the other conforming multimedia content in an order associated with the sorted conforming multimedia content, and

one or more instructions that, when executed by the processor, cause the processor to provide, to the client device, the other conforming multimedia content before the client device receives a request, from the user, for the custom media channel,

one or more instructions that, when executed by the processor, cause the processor to update the playback list based on the client device acquiring the other conforming multimedia content; one or more instructions that, when executed by the processor, cause the processor to receive, from the client device, an indication that the user, when viewing the custom media channel, requested another custom media channel; and

one or more instructions that, when executed by the processor, cause the processor to update the profile based on receiving the indication.

8. The non-transitory computer-readable medium of claim **7**, where the one or more instructions to create the custom media channel further include:

one or more instructions to identify, based on the profile, advertising content; and

one or more instructions to include, in the playback list, information identifying the identified advertising content.

9. The non-transitory computer-readable medium of claim **7**, where the one or more instructions to compare the plurality of stored multimedia content to the profile include: one or more instructions to identify respective metadata associated with the plurality of stored multimedia content; one or more instructions to compare the identified metadata to the profile to identify conforming metadata; and one or more instructions to identify the conforming multimedia content based on the conforming metadata.

10. The non-transitory computer-readable medium of claim **7**, where the playback list is provided to the client device before the client device receives the request, from the user, for the custom media channel.

11. The non-transitory computer-readable medium of claim **7**, where the one or more instructions to identify the one or more topics of interest to the user include: one or more instructions to receive, from the user, data identifying user preferences, and one or more instructions to identify the one or more topics of interest to the user based on the data.

12. The non-transitory computer-readable medium of claim **11**, where the data is received from another client device associated with the user.

13. The non-transitory computer-readable medium of claim **7**, where the instructions further comprises: one or more instructions to update the profile based on a selection of multimedia content by the user, and one or more instructions to update the playback list based on the updated profile.

14. A system, comprising: one or more processors to: determine, based upon prior selections of multimedia content by a user associated with a client device, one or more topics of interest to the user; form a plurality of profiles that are associated with a respective plurality of custom media channels, each profile of the plurality of profile, including: user preferences that include an indication of the one or more topics of interest to the user, and channel policy control information for a corresponding custom media channel of the respective plurality of custom media channels, the channel policy control information being related to retrieval and playback of the corresponding custom media channel, the channel policy control information including playback modes that include an interactive playback mode and a continuous play playback mode; create a custom media channel, of the plurality of custom media channels, based on a profile of the plurality of profiles, the one or more processors, when creating of the custom media channel based on the profile, being further to: compare each of a plurality of stored multimedia content to the profile, identify conforming multimedia content, of the plurality of stored multimedia content, that conforms with the one or more topics of interest to the user and with the channel policy control information, sort the conforming multimedia content based on the user preferences and the channel policy control information, determine respective storage locations associated with the conforming multimedia content, one or more conforming multimedia content, of the conforming multimedia content, being stored at the client device, and other conforming multimedia content, of the conforming multimedia content, being stored externally of the client device, provide, to the client device, a playback list identifying the sorted conforming multimedia content and the respective storage locations, the playback list enabling the client device to provide the sorted conforming multimedia content in an order associated with the sorted conforming multimedia content, provide, to the client device, the other conforming multimedia content before the client device receives a request, from the user, for the custom media channel, and update the playback list based on providing the other conforming multimedia content; receive, from the client device, an indication that the user, when viewing the custom media channel requested another custom media channel; and update the profile based on receiving the indication.

15. The system of claim **14**, the one or more processors being further to: identify, based on the profile, advertising content of a plurality of advertising content; include the advertising content in the provided custom media channel.

16. The system of claim **14**, where the one or more processors, when comparing each of the plurality of stored multimedia content to the profile, are further to: access metadata relating to the plurality of stored multimedia content; and compare the metadata to the profile.

17. The system of claim **14**, where the one or more processors, when providing the playback list, are further to: provide, to the client device, the playback list after receiving the request for the custom media channel, and where the client device is at least one of: a set-top box, a content processing device, a desktop computer, a laptop computer, or a handheld computer.

18. The system of claim **14**, where the client device and the one or more server devices are connected via a packet switched network.

19. The system of claim **14**, where the one or more processors, when updating the profile, are further to: updating the profile further based on at least one of: an input from the user, or prior selections of multimedia content by the user.

* * * * *