**IN THE UNITED STATES PATENT AND TRADEMARK OFFICE**

_____

**BEFORE THE PATENT TRIAL AND APPEAL BOARD**

_____

TIKTOK INC.,

Petitioner,

v.

NTECH PROPERTIES, INC.,

Patent Owner.

_____

Case No. IPR2024-01340

U.S. Patent No. 8,145,704

_____

**PETITION FOR *INTER PARTES* REVIEW
OF U.S. PATENT NO. 8,145,704**

# TABLE OF CONTENTS

**Page**

I. INTRODUCTION ..... 1
II. MANDATORY NOTICES AND FEES ..... 2
A. Real Party-In-Interest ..... 2
B. Related Matters ..... 2
C. Counsel and Service Information ..... 3
D. Payment of Fees ..... 3
E. Requirements for Inter Partes Review ..... 3
III. GROUNDS ..... 3
IV. BACKGROUND ..... 4
A. State of the Art ..... 4
B. Asserted Prior Art ..... 4
1. Whitehead (EX1003) ..... 4
2. Cristofalo (EX1004) ..... 5
3. Marcus '904 (EX1005) ..... 5
4. Marcus '156 (EX1008) ..... 5
C. '704 Patent ..... 5
1. Provisional Application (EX1009) ..... 5
2. Prosecution History (EX1016) ..... 6
3. '704 Patent (EX1001) ..... 6
V. PERSON OF ORDINARY SKILL ..... 8
VI. CLAIM CONSTRUCTION ..... 8
VII. GROUNDS ..... 9
A. Ground 1: Whitehead ..... 9
1. Claim 19 ..... 9
2. Claim 20 ..... 30
3. Claim 21 ..... 31
4. Claim 22 ..... 32

5. Claim 23 ..... 35
6. Claim 24 ..... 35
7. Claim 1 ..... 36
8. Claim 2 ..... 39
9. Claim 3 ..... 39
10. Claim 4 ..... 40
11. Claim 5 ..... 40
12. Claim 6 ..... 40
13. Claim 7 ..... 40
14. Claim 8 ..... 41
15. Claim 9 ..... 41
16. Claim 10 ..... 42
17. Claim 11 ..... 42
18. Claim 12 ..... 45
19. Claim 13 ..... 46
20. Claim 14 ..... 47
21. Claim 15 ..... 48
22. Claim 16 ..... 48
23. Claim 17 ..... 50
24. Claim 18 ..... 51

B. Ground 2: Whitehead and Marcus '904 ..... 51
1. Motivation to Combine & Reasonable Expectation of Success ..... 51
2. All Claims ..... 54
3. Claims 22 and 24 ..... 54
4. Claims 18 and 24 ..... 54
5. Claim 17 ..... 55
6. Claims 1[a]-[e], 19[b], 23[b] ..... 55

C. Ground 3: Cristofalo and Marcus '904 ..... 56

1. Motivation to Combine & Reasonable Expectation of Success ..... 56
2. Claim 19 ..... 58
3. Claim 20 ..... 68
4. Claim 21 ..... 68
5. Claim 22 ..... 69
6. Claim 23 ..... 70
7. Claim 24 ..... 70
8. Claim 1 ..... 71
9. Claim 2 ..... 72
10. Claim 3 ..... 73
11. Claim 4 ..... 73
12. Claim 5 ..... 73
13. Claim 6 ..... 73
14. Claim 7 ..... 73
15. Claim 8 ..... 74
16. Claim 9 ..... 74
17. Claim 10 ..... 74
18. Claim 11 ..... 75
19. Claim 12 ..... 76
20. Claim 13 ..... 77
21. Claim 14 ..... 77
22. Claim 15 ..... 78
23. Claim 16 ..... 78
24. Claim 17 ..... 79
25. Claim 18 ..... 80

D. Secondary Considerations ..... 80

VIII. NO BASIS FOR DISCRETIONARY DENIAL ..... 81

A. 35 U.S.C. § 325(d) Supports Institution ..... 81

B. *Fintiv* Supports Institution ..... 81

1. Overlap Between Issues ..... 81
2. Likelihood of a Stay ..... 81
3. Proximity of the Court's Trial Date to a FWD ..... 82
4. Investment in the Parallel Proceeding ..... 82
5. Whether the Petitioner and the Defendant in the Parallel Proceeding are the Same Party ..... 83
6. Other Circumstances, that Impact the Board's Exercise of Discretion, Including the Merits ..... 83

IX. CONCLUSION ..... 83

**EXHIBIT LIST**

| Ex. | Description |
|---|---|
| EX1001 | U.S. Patent No. 8,145,704 ("'704 patent") |
| EX1002 | Declaration of Kevin Almeroth, Ph.D. |
| EX1003 | U.S. Pat. No. 8,555,318 ("Whitehead") |
| EX1004 | U.S. Pat. Pub. No. 2002/0152117 ("Cristofalo") |
| EX1005 | U.S. Pat. Pub. No. 2006/0015904 ("Marcus '904") |
| EX1006 | U.S. Patent No. 6,177,931 |
| EX1007 | Int'l Publ. No. WO 00/40021 |
| EX1008 | U.S. Pat. No. 6,032,156 ("Marcus '156") |
| EX1009 | Provisional Application for U.S. Pat. No. 8,145,704 (U.S. Prov. Appl. No. 60/934,456) |
| EX1010 | D. Wilkerson, "ACTV hopes to steal print's thunder" (Dec. 8, 2000) |
| EX1011 | Amended Complaint in *NTECH Properties, Inc. v. ByteDance Ltd. et al.*, No. 2:24-cv-00130 (E.D. Tex.) |
| EX1012 | B. Hammerseley, "Audible revolution" (Feb. 11, 2004) |
| EX1013 | U.S. Pat. No. 6,388,714 |
| EX1014 | U.S. Pat. No. 7,467,398 |
| EX1015 | Verizon, "Verizon Unlocks Full Potential of Fiber-Based FiOS Internet and Video Services With Advanced 100-Mbps Broadband Home Router" (June 28, 2006) |
| EX1016 | Prosecution History for U.S. Pat. No. 8,145,704 |
| EX1017 | Prosecution History for U.S. Pat. No. 8,886,753 |

| | |
|---|---|
| EX1018 | Prosecution History for U.S. Pat. No. 9,215,261 |
| EX1019 | Prosecution History for U.S. Pat. No. 9,923,947 |
| EX1020 | List of Recent Expert Witness Engagements of Dr. Kevin Almeroth |
| EX1021 | Curriculum Vitae of Dr. Kevin Almeroth |
| EX1022 | Americans' Use of Mobile Technology and Home Broadband, *Pew Research Center*, January 31, 2024 |

## LIST OF CHALLENGED CLAIMS

| Claim | Limitation |
|---|---|
| 1[pre] | A method of generating media programming for display on a client, comprising: |
| 1[a] | receiving by an aggregator data relating to a plurality of media streams; |
| 1[b] | accessing by the aggregator user information; |
| 1[c] | based on the user information and the data related to the plurality of media streams, determining by the aggregator a temporal sequence of media programming comprising the media streams; |
| 1[d] | accessing by the aggregator over a network the plurality of media streams; and |
| 1[e] | providing by the aggregator to the client media programming in the determined temporal sequence, the media programming comprising concatenated elements of the plurality of media streams. |
| 2 | The method of claim 1, wherein the aggregator comprises a web server. |
| 3 | The method of claim 1, wherein the aggregator comprises software stored in a client memory device and adapted to be executed on a client processor. |
| 4 | The method of claim 1, wherein the aggregator comprises an electronic program guide. |
| 5 | The method of claim 1, wherein the user information comprises past usage information of the user. |
| 6 | The method of claim 1, wherein the media programming comprises a video feed. |
| 7 | The method of claim 1, wherein the step of providing the media programming comprises providing from a web server via a network to the client the media programming. |

| Claim | Limitation |
|---|---|
| 8 | The method of claim 1, wherein the step of providing the media programming comprises providing the media programming on a television channel. |
| 9 | The method of claim 1, wherein the media programming is provided through at least one of an XML feed, an RSS feed, Atom feed, and a podcast. |
| 10 | The method of claim 1, further comprising providing by the aggregator a presentation element for presenting data indicative of a plurality of media streams to the user, and, responsive to a user selection of one of the presented media streams, providing by the aggregator the selected media stream in the media programming. |
| 11 | The method of claim 10, further comprising, in response to user highlighting of one of the displayed media streams, displaying by the aggregator the highlighted media stream on a user display together with a list of media streams. |
| 12 | The method of claim 11, wherein the user information includes the identity of a media element playing on the displayed highlighted media stream prior to the receipt of the user selection. |
| 13 | The method of claim 10, further comprising, in response to the received selection, providing predetermined media programming during a first time period, and providing media programming responsive to the user information in a second time period after the first time period. |
| 14 | The method of claim 1, wherein the data related to the plurality of media streams comprises categorizing data associated with media elements of the media streams indicative of subjectively determined character of the media elements. |
| 15 | The method of claim 14, wherein the user information comprises viewing history, user preference data and search queries. |
| 16 | The method of claim 14, further comprising deriving by the aggregator keywords from the media streams, deriving by the |

| Claim | Limitation |
|---|---|
| | aggregator from the derived keywords further keywords from a map of synonyms, and employing the further derived keywords in determining the temporal sequence. |
| 17 | The method of claim 1, wherein at least one of the media streams comprises media elements having labels indicative of payment due from an advertiser and payment due to a content provider. |
| 18 | The method of claim 1, further comprising caching by the aggregator the media streams prior to providing the elements in the media programming, whereby switching between streams at optimal times is facilitated. |
| 19[pre] | A system for providing media programming, comprising: |
| 19[a][i] | an aggregator having a memory and a processor, |
| 19[a][ii] | the [aggregator] processor adapted for presenting a plurality of media streams to a user |
| 19[a][iii] | the [aggregator] processor adapted for … receiving a signal having data indicative of a selection of one of the media streams |
| 19[a][iv] | the [aggregator] processor adapted for … providing an output signal including data indicative of the selection and of user data; and |
| 19[b][i] | a publisher having a memory and a processor, |
| 19[b][ii] | the publisher processor adapted to receive the output signal from the aggregator, and, |
| 19[b][iii] | the publisher processor adapted to … responsive to the data indicative of the selection and of user data, access from the memory at least one algorithm for selection and sequencing of media elements, |
| 19[b][iv] | the publisher processor adapted to … select a temporal sequence of media programming comprising the selected media stream and other media elements based on an output of the algorithm using the selection and the user data, |

| Claim | Limitation |
|---|---|
| 19[b][v] | the publisher processor adapted to … assemble the selected media stream and the other media elements in the temporal sequence, and |
| 19[b][vi] | the publisher processor adapted to … provide media programming to the user including the assembled media stream and other media elements in the temporal sequence. |
| 20 | The system of claim 19, wherein the aggregator comprises a web server, the aggregator processor being adapted to present a web page listing the media streams for display on a client device. |
| 21 | The system of claim 20, wherein the publisher comprises a web server, and wherein the aggregator processor is adapted to redirect a client device to the publisher web server. |
| 22 | The system of claim 19, wherein in response to the selection, the publisher provides a first media stream having content from concatenated elements of at least second and third media streams, and, in response to a further user selection, provides content preferentially from one of the second and third media streams. |
| 23[pre] | A method for aggregating media programming, comprising: |
| 23[a] | receiving an input signal having data indicative of a selection of one of the media streams feeds from the list; |
| 23[b] | providing an output signal having data indicative of the selection; |
| 23[c] | receiving, responsive to the output signal, at least the selected media stream; and |
| 23[d] | responsive to the data indicative of the selection and user information, and using at least one algorithm for selection and sequencing of media elements, selecting a temporal sequence of media programming comprising the selected media stream and other media elements and providing media programming to the user, the media programming comprising the other media elements selected and concatenated in accordance with the temporal sequence with the selected media stream. |

| Claim | Limitation |
|---|---|
| 24 | The method of claim 23, further comprising receiving a second media stream, and wherein the step of providing media programming comprises switching at least between the selected media stream and the second media stream in accordance with the temporal sequence. |

# I. INTRODUCTION

The ’704 patent is directed to generating “media programming” based on a user “selection” and “user data.” This was far from a new concept in June 2007, when PO filed the ’704 patent’s provisional application. Television providers have been customizing programming for users in specific geographic areas since the 1970s, and techniques for generating custom “virtual channels” based on an individual “user profile” were known at least by the 1990s. This trend accelerated in the early 2000s as computer technology reached speeds sufficient for streaming video over the Internet to individual users. By June 2007, the technological landscape was comparable to today, with Netflix streaming, YouTube, and Amazon Prime already available to consumers.

The only alleged point of novelty in the ’704 patent was to arbitrarily divide the processing involved in generating such “media programming” between an “***aggregator***” that provides a UI and a “***publisher***” that transmits custom “media programming.” The ’704 patent does not, however, disclose any technical innovation for implementing this basic division of labor. And even this sole alleged point of novelty is present only in claims 19-24 and missing from claims 1-18.

Moreover, even the ’704 patent’s “***aggregator***”/“***publisher***” structure is not new. For example, Whitehead (filed by Verizon) discloses a “content processing device” and “mixing server” that work together to generate “one or more custom

media channels" ("***media programming***"). Cristofalo (filed by ACTV) similarly discloses a "transmitting system" and "receiving system." For **Ground 1**, Whitehead renders obvious all claims of the '704 patent. For **Ground 2**, Whitehead is combined with Marcus '904, which has the same named inventor and assignee as the '704 patent and discloses many '704 patent claim limitations verbatim. For **Ground 3**, the combination of Cristofalo and Marcus '904 also renders obvious the '704 patent claims.

Accordingly, Petitioner respectfully requests that the Board institute this IPR and find all claims of the '704 patent invalid.

## II. MANDATORY NOTICES

### A. Real Party-In-Interest

The real parties-in-interest for Petitioner are TikTok Inc., Bytedance Ltd., Bytedance Pte. Ltd., and TikTok Pte. Ltd.

### B. Related Matters

The '704 patent was only asserted *NTECH Properties, Inc. v. ByteDance Ltd. et al.*, Case No. 2:24-cv-00130 (E.D. Tex., filed Feb. 23, 2024).

The '704 patent is in the same family as U.S. Patent Nos. 8,886,753, 9,215,261, and 9,923,947, which have also been asserted in that case. Petitioner is concurrently filing IPR petitions against these family members.

### C. Counsel and Service Information

Electronic service may be made on the email addresses identified below and in the accompanying Power of Attorney.

| LEAD COUNSEL | BACK-UP COUNSEL |
|---|---|
| James M. Glass (Reg. No. 46729)<br>jimglass@quinnemanuel.com<br>QUINN EMANUEL URQUHART & SULLIVAN, LLP<br>51 Madison Avenue, 22nd Floor<br>New York, NY 10010<br>Tel: (212) 849-7000 | Ognjen Zivojnovic (Reg. No. 69,516)<br>ogizivojnovic@quinnemanuel.com<br>QUINN EMANUEL URQUHART & SULLIVAN, LLP<br>50 California Street, 22nd Floor<br>San Francisco, California 9411<br>Tel: (415) 875-6600<br><br>Gavin Snyder (*pro hac vice* to be requested upon grant authorization)<br>gavinsnyder@quinnemanuel.com<br>QUINN EMANUEL URQUHART & SULLIVAN, LLP<br>1109 First Avenue, Suite 210<br>Seattle, Washington 98101<br>Tel: (206) 905-7000 |

### D. Payment of Fees

The Office is authorized to charge the fee required for this Petition (any any additional fees) to Deposit Account No. 50-5708.

### E. Requirements for Inter Partes Review

Petitioner certifies that the ’704 patent is available for *inter partes* review, that Petitioner is not barred or estopped, and that 35 U.S.C. §§315(a)-(b) is inapplicable.

## III. GROUNDS

| Ground | Basis | Reference(s) | Claims |
|---|---|---|---|
| 1 | §103 | Whitehead | 1-24 |

| | | | |
|---|---|---|---|
| 2 | §103 | Whitehead and Marcus '904 | 1-24 |
| 3 | §103 | Cristofalo and Marcus '904 | 1-24 |

## IV. BACKGROUND

### A. State of the Art

Media providers have been customizing programming for decades, first on a market-by-market basis, then on an individual user basis. Commercial interest in generating custom media programming to individual users exploded in the early 2000s, however, as broadband Internet connections with sufficient speed for video streaming became commonplace. EX1002 ¶¶57-61.

### B. Asserted Prior Art

With the rise in commercial interest in transmitting media programming over the Internet came a corresponding influx of patent applications on techniques for generating custom media programs based on user selections and user data.

#### 1. Whitehead (EX1003)

In 2005-2006, Verizon expanded its fiber-based broadband Internet and video services, allowing its customers to stream videos at speeds of up to 30 Mbps and also introduced its "FiOS TV server." EX1015. Recognizing the potential of this expansion of broadband Internet and video services, Verizon filed the application for Whitehead on Dec. 6, 2006. Whitehead issued on October 8, 2013 and is prior art under 35 U.S.C. § 102(e). EX1002 ¶¶62-64.

### 2. Cristofalo (EX1004)

ACTV developed technology for targeting advertisements to specific users by "trigger[ing] a set-top box to switch to the appropriate commercial." EX1010. This functionality was deployed in early 2001 in partnership with AT&T. EX1010. ACTV also filed an application on this technology on April 12, 2001, which was published as U.S. Pat. Apl. Pub. No. 2002/0152117 ("Cristofalo") on October 17, 2002. Cristofalo is prior art under 35 U.S.C. §102(b). EX1002 ¶¶65-67.

### 3. Marcus '904 (EX1005)

Marcus '904 was published on January 19, 2006. Marcus '904 is prior art under 35 U.S.C. §102(b). Marcus '904 has the same named inventor and assignee as the challenged '704 patent. EX1002 ¶¶68-69.

### 4. Marcus '156 (EX1008)

U.S. Pat. No. 6,032,156 ("Marcus '156") is incorporated by reference in both Marcus '904 and the '704 patent. Marcus '156 was issued on February 29, 2000. EX1002 ¶¶70-71.

## C. '704 Patent

### 1. Provisional Application (EX1009)

The '704 patent claims priority to U.S. Provisional Patent Application No. 60/934,456, filed Jun. 13, 2007. EX1002 ¶¶40.

### 2. Prosecution History (EX1016)

The ’704 patent was allowed after applicant substantially revised the pending claims to require “a temporal sequence” and argued that this limitation was missing from the cited art. EX1016 at 122-33, 140-47; EX1002 ¶¶41-42; EX1002 ¶¶44-47.

### 3. ’704 Patent (EX1001)

The ’704 patent issued with claims 1-24, including independent claims 1, 19, and 23. Claims 19-24 are directed to the concept of generating custom media programming using an “***aggregator***” and a “***publisher***.” These components are shown in the ’704 patent’s Figure 1:

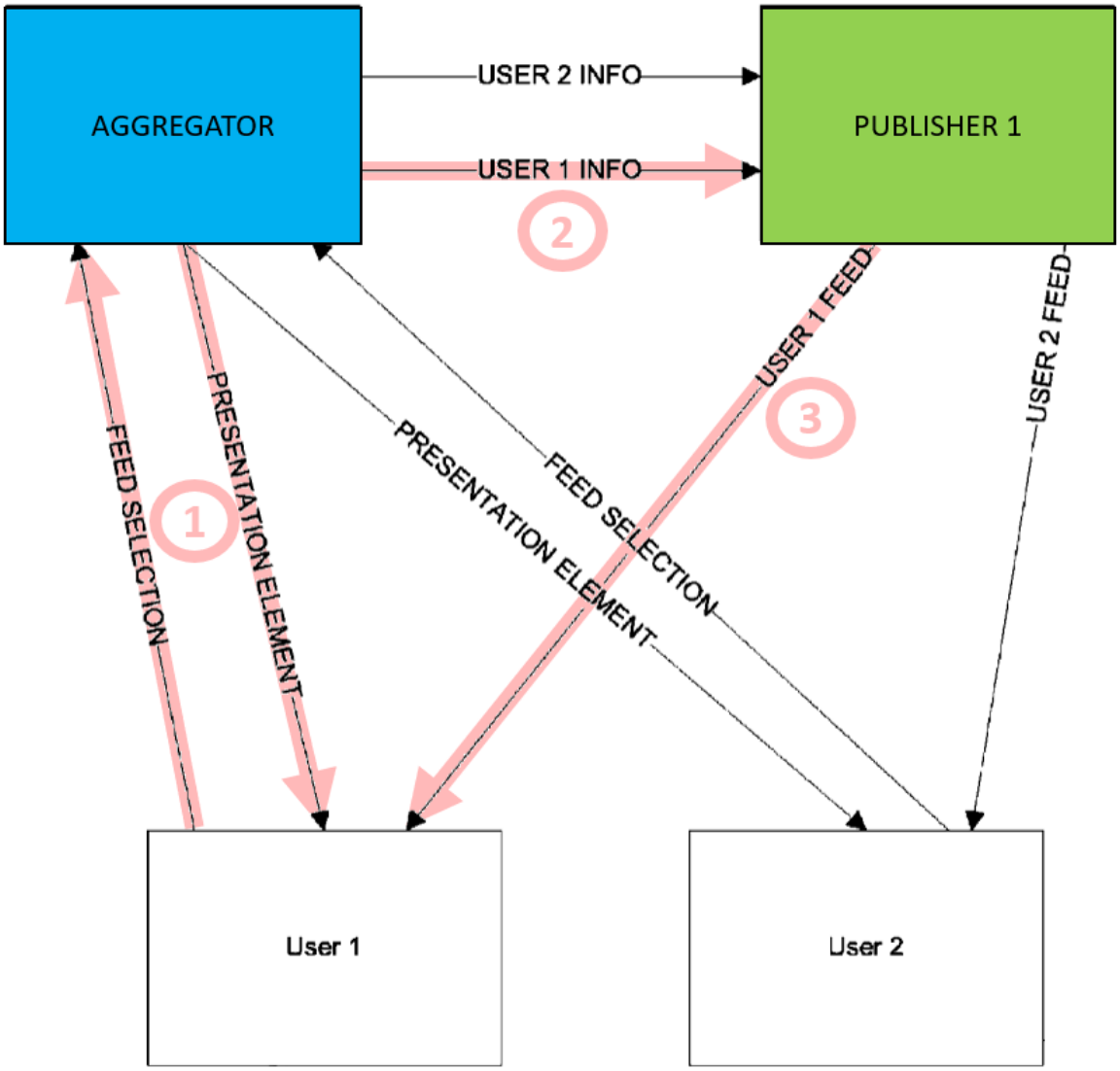


Claims 19-24 recite three basic steps. **Step 1:** The ***aggregator*** provides a user interface presenting available media feeds and receives a user selection of one of those media feeds. **Step 2:** The ***aggregator*** then provides the user selection and user profile information to the ***publisher***. **Step 3:** The ***publisher*** generates custom media programming comprising the selected media feed and advertising or other media

elements and provides the custom media programming to the user. EX1002 ¶¶35-38.

In contrast, claims 1-18 do not even require a separate "***publisher***." Rather, claim 1 is directed to the basic concept of an "***aggregator***" generating custom media programming based on user profile information. EX1002 ¶39.

## V. PERSON OF ORDINARY SKILL

A person of ordinary skill in the art at the time of the '704 patent ("POSITA") had at least a Bachelor of Science in electrical engineering, computer engineering, or similar fields and at least two years of practical experience in the field of media processing and/or transmission. More education can supplement for less practical experience, and vice versa. EX1002 ¶¶48-50.

Petitioner's expert, Dr. Almeroth, exceeded this level by the priority date. EX1002 ¶51.

## VI. CLAIM CONSTRUCTION

No express constructions are required to find the '704 patent claims invalid; however, Petitioner identifies and addresses the plain meaning of certain terms in the analysis for the presented Grounds.

# VII. GROUNDS

## A. Ground 1: Whitehead

### 1. Claim 19[1]

#### (a) 19[pre]

Whitehead discloses system 100 for "receiving a video signal from a network and providing programming such as video to media player 115." EX1003, 2:4-16; EX1002 ¶72.

#### (b) 19[a][i]

Whitehead discloses **content processing device 110**, which is the claimed "***aggregator***," and **mixing server 130**, which is the claimed "***publisher***" (Section VII.A.1.f).[2]

---

[1] PO's complaint against Petitioner alleges infringement of "exemplary Claim 19." EX1011 ¶ 52. Thus, Petitioner addresses independent claim 19 first.

[2] References to the '704 patent claim language are bold and italicized. Emphasis is bolded but not italicized. Emphasis is added unless otherwise indicated.

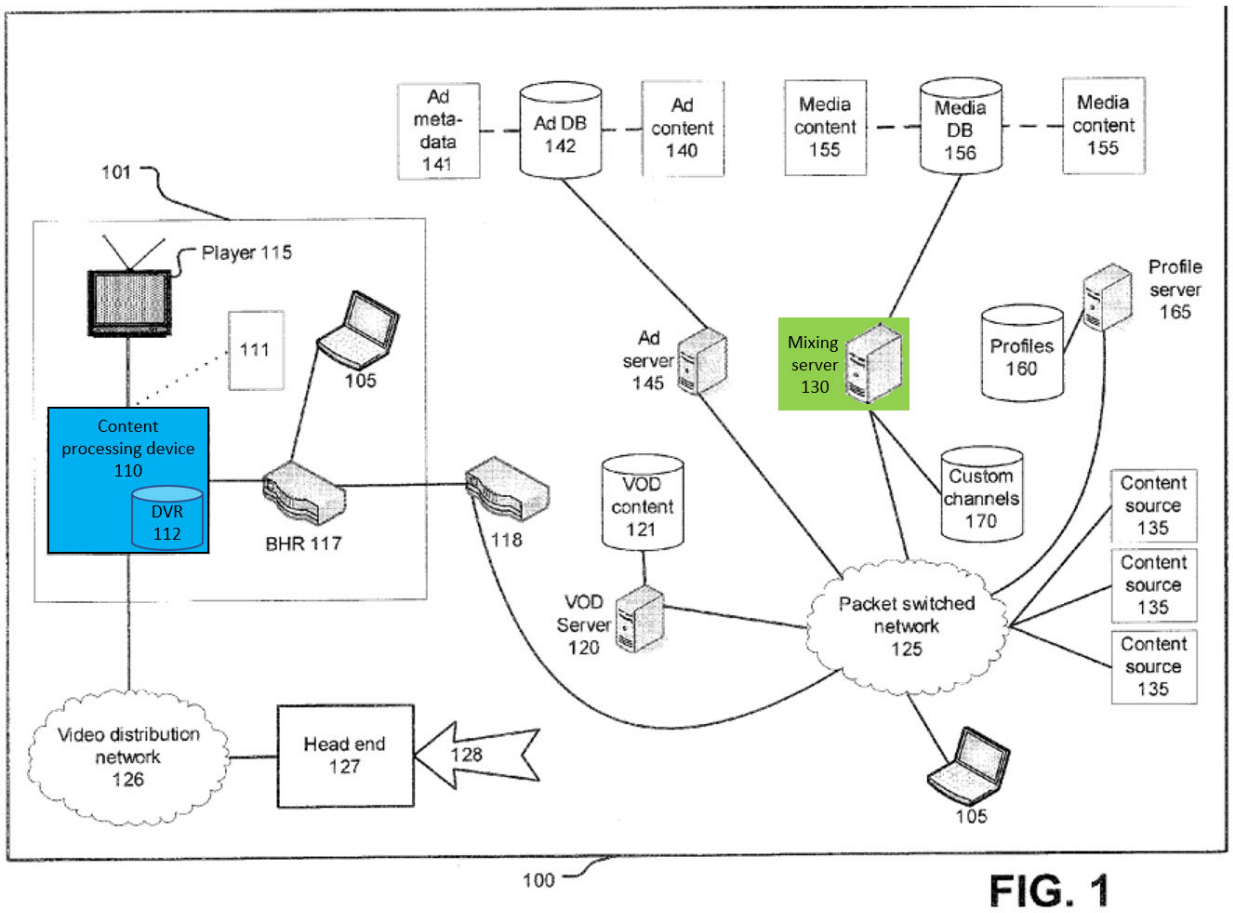


FIG. 1

The '704 patent specification describes an "***aggregator***" as "provid[ing] a presentation element"—i.e., a user interface—"to user 1 120 and 2 130" for different media feeds. EX1001 2:44-47, 3:6-18. Whitehead similarly discloses that its **content processing device 110** presents a menu of media programming available from different sources. For example, Whitehead discloses that its **content processing device 110** "performs operations relating to generating a user interface, e.g., that is displayed in media player 115." EX1003, 2:60-3:7, 15:16-22. A user may then "browse a menu of video-on-demand-options displayed on media player 115." EX1003, 3:59-4:9, 6:47-7:2. The user may also use **content processing device 110**

to "select a channel … associated with a custom media channel 170." EX1003, 15:23, 18:47-62. Each of these custom media channels 170 includes content from one or more different content sources 135, and a collection of custom media channels thus covers multiple different content sources 135. EX1003, 3:14-28, 5:56-6:9, 7:3-18; EX1002 ¶¶73-74.

**Content processing device 110** includes "***memory***" and a "***processor***." EX1003, 7:44-59; EX1002 ¶75.

**(c) 19[a][ii]**

Whitehead's **content processing device 110** displays a menu "indicat[ing] a plurality of custom media channels 170 that are available for playing" ("***presenting a plurality of media streams to a user***"). EX1003, 2:60-3:7, 3:59-4:9, 4:45-52, 6:20-34, 10:46-67, 11:9-16, 11:40-58, 15:16-16:53, 18:47-62. Whitehead discloses this limitation under two mappings: the "***plurality of media streams***" are either (1) custom media channels 170 made available by **mixing server 130** to **content processing device 110** (**Media Stream Mapping 1**); or (2) media content transmitted by content sources 135 to **mixing server 130** (**Media Stream Mapping 2**). EX1002 ¶¶76-77.

**(i) Media Stream Mapping 1: custom media channels 170 are claimed "*media streams*"**

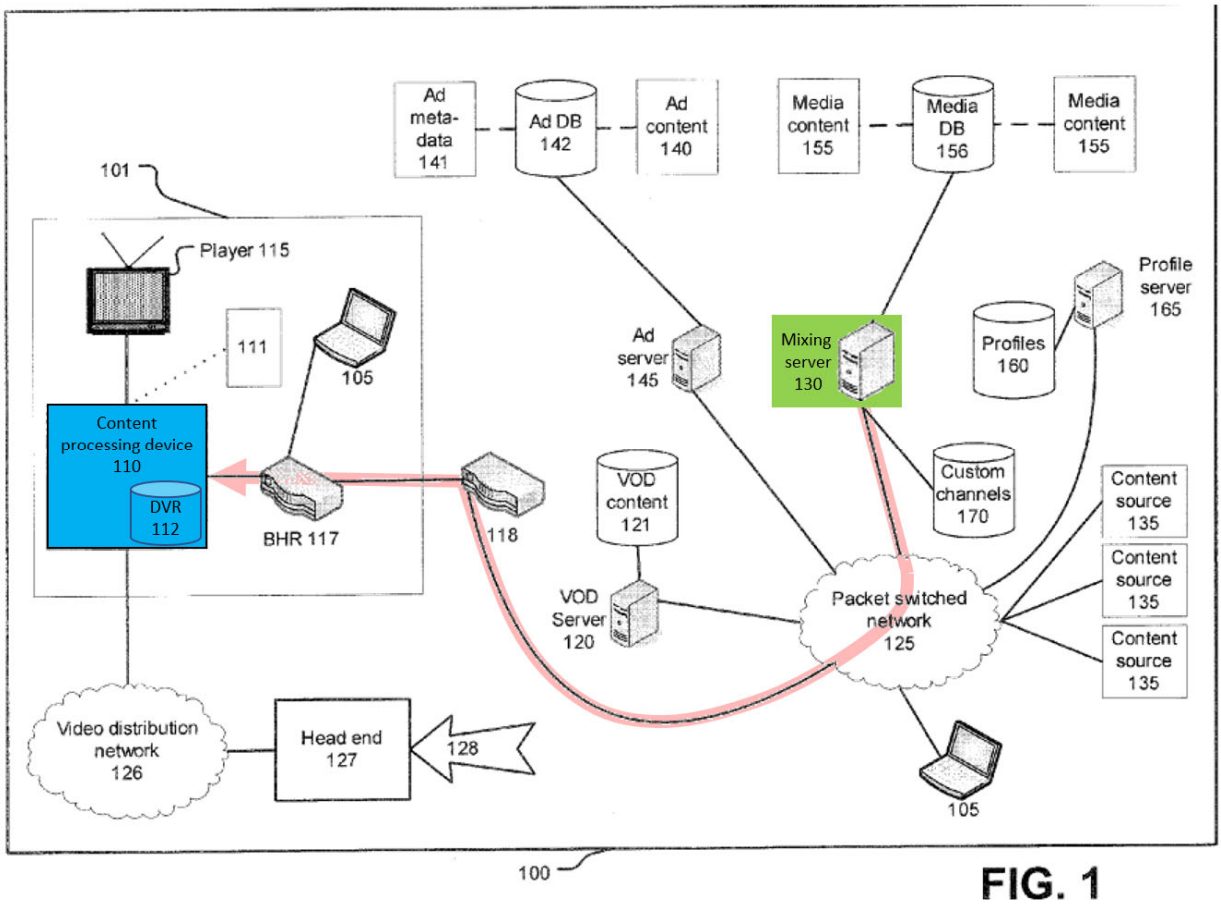


FIG. 1

Whitehead's menu of available custom media channels "***present[s] a plurality of media streams***" because each custom **media** channel 170, if selected, is "**streamed** … to **content processing device 110**" for example as "a single multimedia file." EX1003, 8:42-64. Thus, custom media channels 170 are themselves the claimed "***plurality of media streams***." EX1002 ¶78.

**(ii) Media Stream Mapping 2: content sources 135 provide claimed "*media streams*"**

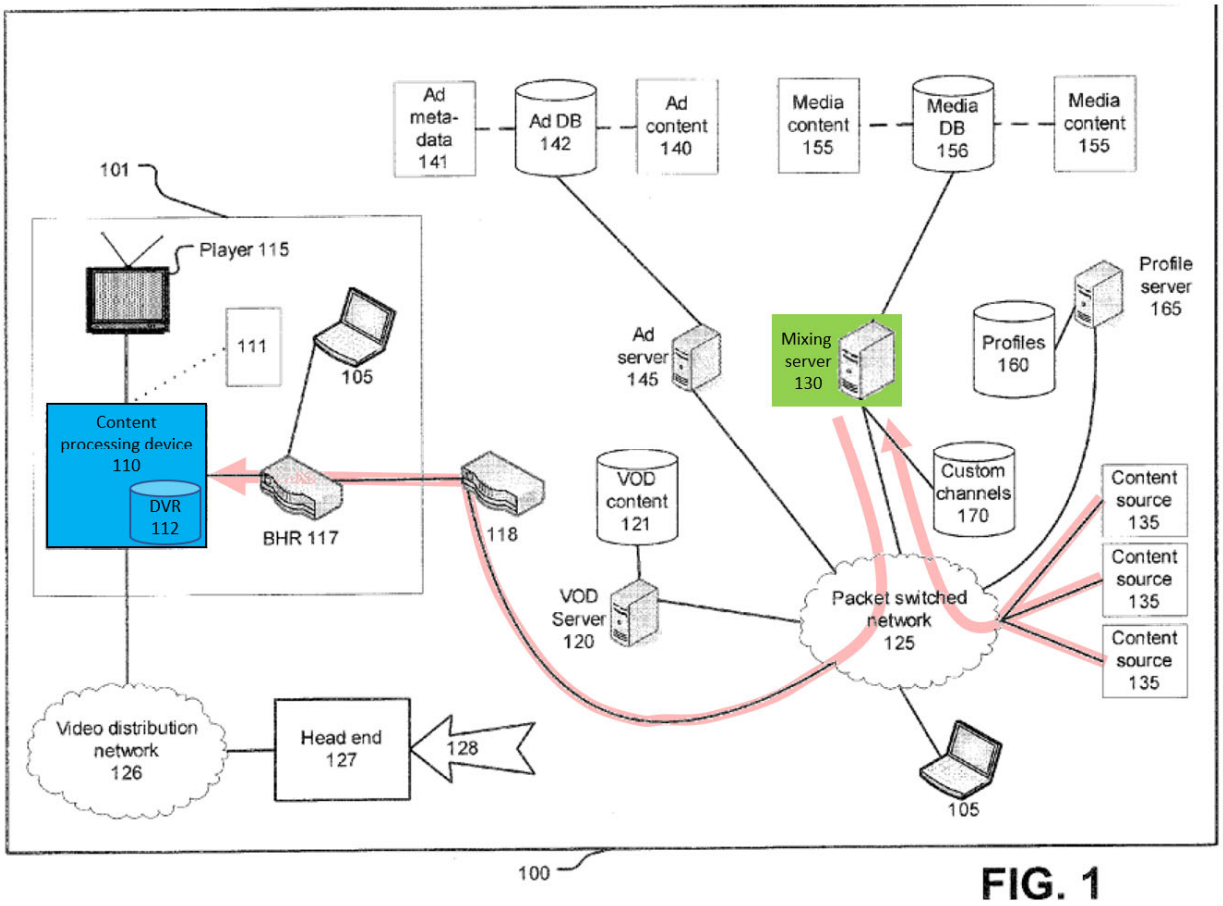


FIG. 1

Whitehead's menu of available custom media channels "***present[s] a plurality of media streams***" because each custom media channel 170 generated by **mixing server 130** corresponds to a "***media stream***" from a different content source 135. EX1002 ¶79.

First, Whitehead discloses that each custom media channel 170 is created based on a different profile 160, and each profile 160 "identit[ies] … **one** or more content sources 135 of interest." EX1003, 5:56-6:9, 7:3-18, 18:47-62. Each of

Whitehead's plurality of custom media channels 170 can thus correspond to a different content source 135. EX1002 ¶¶80-81.

Second, Whitehead discloses that each content source 135 provides a "***media stream***." Whitehead discloses that "[c]ontent sources 135 may include a wide variety of sources," including sources that "broadcast" content "on a particular data at a particular time," *i.e.*, television channels. EX1003, 5:9-23, 10:46-67; EX1003, 2:52-59, 5:24-42. Television channels provide content as continuous streams ("***media streams***"). EX1002 ¶82.

To the extent PO argues that Whitehead's content sources 135 do not provide "***media streams***," Whitehead renders this obvious. Television channels were a well-known source of media content even before the '704 patent's priority date. Moreover, a POSITA would be motivated to use television channels as content sources 135. For example, it would be desirable to maximize the number and variety of content sources, since having more sources and variety improves the likelihood of having the best media content in custom media channel 170. As another, television channels are one of the most popular and abundant sources of media content, and many subscribers expect to have access to such content sources. There would also be a reasonable expectation of success of using television channels as content sources 135. Whitehead already discloses that media content 155 "provided by content sources 135" is "stored in a media database 156." EX1003, 5:9-23. Thus,

**mixing server 130** could store media content 155 from television channels in database 156 for subsequent inclusion in a custom media channel 170. Alternatively, **mixing server 130** could switch to the appropriate channels in real time as the media content 155 is being broadcast to generate custom media channel 170. EX1006 at 32:61-33:8, EX1007 at 5-6; EX1002 ¶¶83-84.

**(d) 19[a][iii]**

Whitehead's **content processing device 110** receives a user selection of one of these custom media channels 170 ("***receiving a signal having data indicative of a selection of one of the media streams***"). EX1003, 4:45-52, 11:9-16, 11:40-58, 15:16-16:53, 18:47-62. This selection corresponds to selection of both custom media channel 170 itself ("***media stream***" under **Media Stream Mapping 1**) and content source 135 corresponding to that custom media channel 170 ("***media stream***" under **Media Stream Mapping 2**). EX1002 ¶85.

**(e) 19[a][iv]**

Whitehead discloses or renders obvious that **content processing device 110** transmits "***an output signal including data indicative of the selection and of user data***" in response to the user selection. This "output signal" could be (1) a request sent from **content processing device 110** directly to **mixing server 130** (**Output Signal Mapping 1**), (2) data sent by **content processing device 110** to profile server

165, and then from profile server 165 to **mixing server 130** (**Output Signal Mapping 2**), or a combination of the two. EX1002 ¶86.

**(i) Output Signal Mapping 1: request from content processing device 110 to mixing server 130**

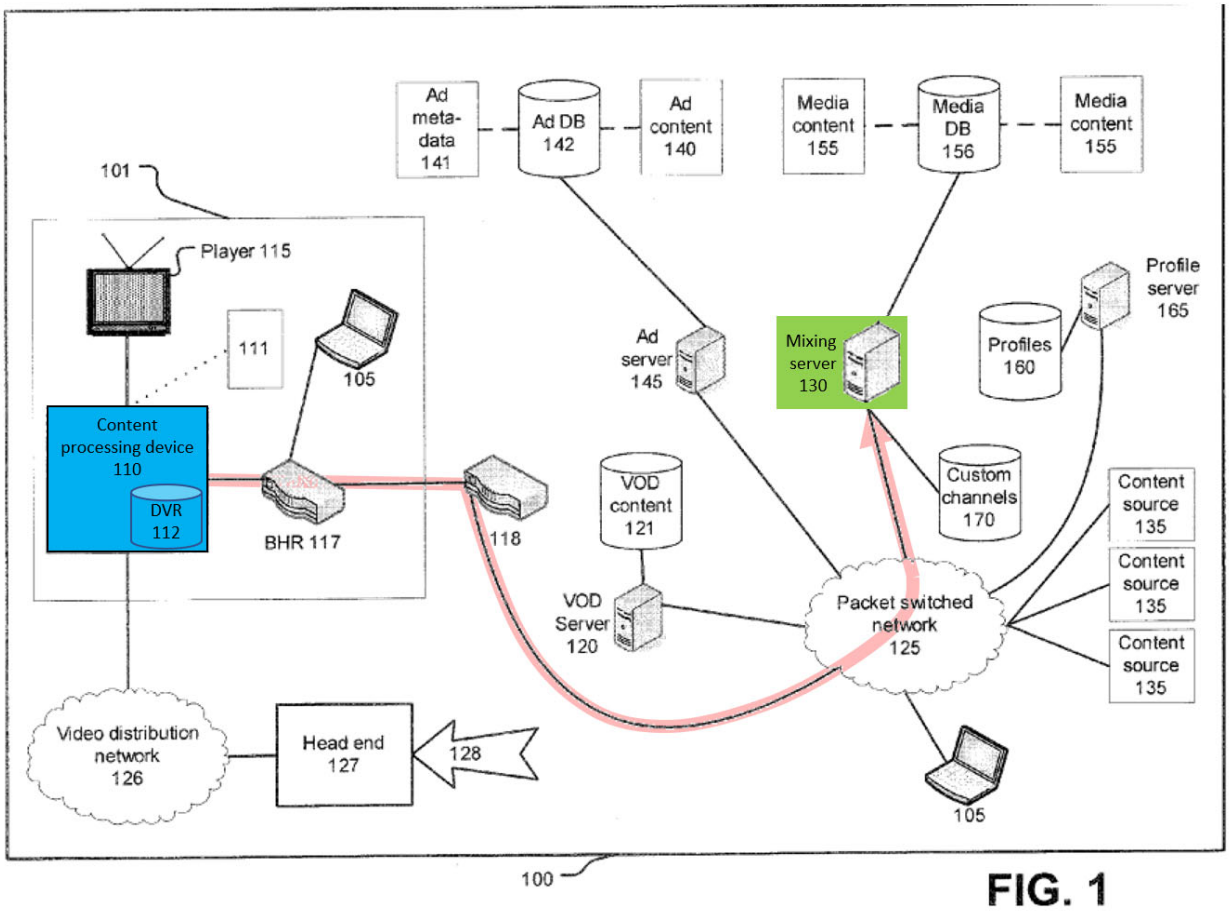


FIG. 1

Whitehead discloses that "[c]ontent processing device 110 may … make requests to … [**mixing server**] **130**, etc. via network 125." EX1003, 3:40-51; EX1003, 9:30-58. This request "trigger[s]" **mixing server 130** "to create one or more custom media channels 170 based on one or more custom channel profiles 160" in "real-time or near real-time." EX1003, 11:40-12:17. Where the user has

multiple custom media channels 170 to choose from (EX1003, 11:9-16), this request ("***output signal***") necessarily identifies the selected custom media channel 170 ("***include[es] data indicative of the selection***"). Otherwise, **mixing server 130** would not know which custom media channel was selected by the user and thus should be created. EX1002 ¶87.

To the extent PO argues Whitehead does not disclose that its custom channel request from **content processing device 110** to **mixing server 130** includes data indicative of the selected custom media channel 170 ("***data indicative of the selection***") in its request to **mixing server 130** ("***output signal***"), Whitehead renders this obvious. **Mixing server 130** must know which custom media channel 170 the user selected to create that channel. EX1003, 3:40-51, 11:40-58. An obvious implementation is for **content processing device 110** to include an identifier or other data corresponding to the selected custom media channel 170 ("***data indicative of the selection***") in its request ("***output signal***"). Simply including this identifier in the request (rather than conveying it in some other manner) allows **mixing server 130** to locate the corresponding profile 160 faster and thereby facilitates creating the selected custom media channel 170 in real time or near-real-time. EX1003, 11:40-58; EX1002 ¶88.

As addressed in Section VII.A.1.e.iii, the claimed "***output signal***" does not require transmitting both "***data indicative of the selection***" and "***data indicative of***

***… user data***" in a single request. Even if that were required, however, it would be obvious for Whitehead's request from **content processing device 110** to **mixing server 130** ("***an output signal including data indicative of the selection***") to also include "***data indicative … of user data***." **Mixing server 130** creates custom media channel 170 in real time or near-real-time. EX1003, 11:40-58. Processing efficiency is an important consideration in achieving that goal – too much delay retrieving user data would result in a custom media channel 170 that is no longer created in real time or near real time. Including at least some "***user data***," such as "subject matter categories of interest to the user" (EX1003, 7:3-18), in the request itself speeds up processing because **mixing server 130** would be able to start creating custom media channel 170 even before receiving the remainder of profile 160. Plus, some "***user data***," such as username (EX1003, 7:3-18), is helpful to quickly retrieving profile 160 in the first instance by, for example, using the username to identify a specific user, and then using other data to identify a specific profile 160 of that user (instead of having to search all profiles 160). Moreover, other "***user data***," such as the user's geographic location used for targeting advertisements and/or as the "geographic location of interest to the user" for content targeting is subject to change since computer 105 with media player 115 may be a mobile device (e.g., "notebook, laptop, or handheld computer"). EX1003, 2:52-59, 7:3-18, 7:19-43, 12:38-55. Rather than requiring the user to update profile 160 every time the user goes to

different geographic location, **content processing device 110** could automatically include the user's geographic location (e.g., by looking up the geolocation of an IP address) in the request, thereby improving convenience and accuracy. EX1002 ¶89.

Another obvious design option would be to implement profile server 165 as part of **content processing device 110** and include the complete profile 160 ("***user data***") in any request for custom media channel 170 ("***output signal***"). Whitehead already recognizes that various functionalities in Figure 1 can be combined or shifted between system components. EX1003, 2:52-59, 4:10-26, 6:35-46, 15:16-22, 19:44-63. Maintaining profiles 160 on **content processing device 110** would simplify processing and communications, since it would eliminate the need for a separate profile server 165 or looking up specific sets of profiles a user of **content processing device 110** is permitted to update. EX1002 ¶90.

There would also be a reasonable expectation of success for including "***data indicative of the selection and of user data***" in Whitehead's request from **content processing device 110** directly to **mixing server 130** ("***output signal***"). Whitehead discloses using common communication protocols, such as TCP/IP, for communications between **content processing device 110** and **mixing server 130**, and these protocols allow for the inclusion of a fair amount of data in each request (the maximum size of a single TCP packet is 64 KB, and 1.5 KB is a common MTU size), which would permit inclusion of "***data indicative of the selection and of user***

***data***." A 1.5 KB request ("***output signal***") could easily include data indicating a custom media channel selection, username, current geographic location, content source, and subject matter of interest. And there is no practical reason why the request would need to be limited to a single TCP packet, either. Indeed, Whitehead already discloses that an entire "profile 160 [is] provided in [a] message" (EX1003, 12:8-17), rendering obvious providing some or all of profile 160 ("***user data***") in addition to data identifying the selected custom media channel 170 ("***data indicative of the selection***") in a request message from **content processing device 110** to **mixing server 130** ("***output signal***"). EX1002 ¶91.

**(ii) Output Signal Mapping 2: data from content processing device 110, via profile server 165, to mixing server 130**

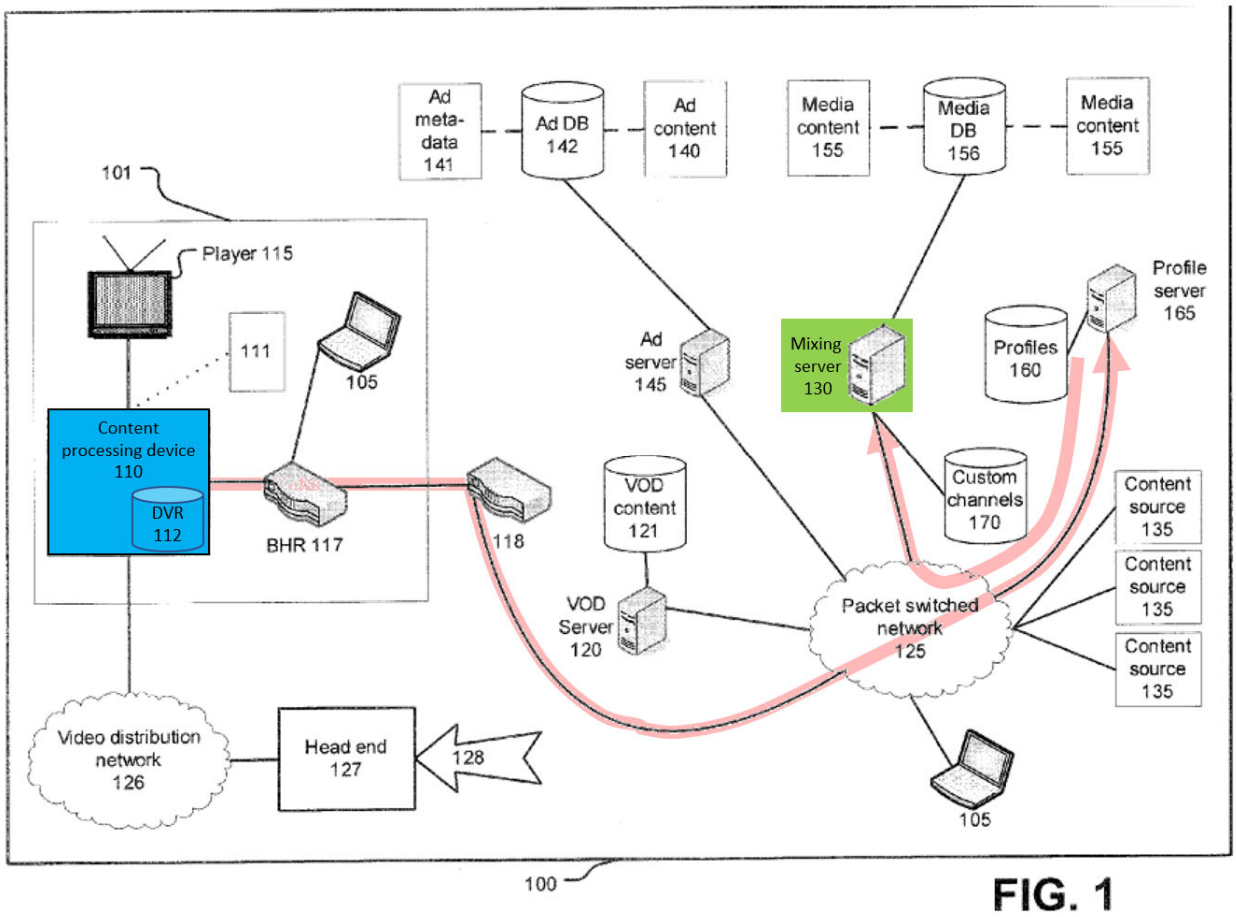


FIG. 1

Whitehead's **content processing device 110** can be "used to create, modify, and/or delete profiles 160." EX1003, 6:35-46, 10:6-32, 15:16-22, 15:65-16:21, 19:16-38. This includes provision of "***user data***" included in those profiles, such as a username, user interests, and playback capabilities to profile server 165. EX1003, 5:56-6:9, 7:3-18. Whitehead's profile server 165 then transmits a message to **mixing server 130** containing that profile 160 ("***user data***"). EX1003, 11:40-12:17. Thus, **content processing device 110** transmits "***an output signal including … user data***"

in connection with creating or modifying a profile 160, and **mixing server 130** receives that same "***user data***" when the user selects the corresponding custom media channel 170. EX1002 ¶92.

As addressed in Section VII.A.1.e.iii, the claimed "***output signal***" does not require transmitting both "***data indicative of the selection***" and "***data indicative of … user data***" in a single message. Even if that were required, however, it would be obvious for Whitehead's message from **content processing device 110** to profile server 165 ("***output signal***") to also include the claimed "***data indicative of the selection***." Whitehead's users can have multiple profiles 160 for different custom media channels 170 (EX1003, 11:9-16), and each profile 160 and corresponding custom media channel 170 thus needs an identifier ("***data indicative of the selection***") to distinguish it from other profiles. That same identifier ("***data indicative of the selection***") would be included in any message from **content processing device 110** to profile server 165 alongside any new or updated profile information ("***output signal including data indicative of … user data***"), as well as any message ("***output signal***") containing this profile from profile server 165 to **mixing server 130**. EX1003, 11:59-12:17. Including this identifier in the profile (and any messages regarding the same) would thus allow the system to differentiate and track different profiles in a simple manner. Moreover, there would be a reasonable expectation of success since identifiers were well known in the art and

commonly used for this same purpose. Indeed, Whitehead itself discloses unique identifiers for users and content. EX1003, 5:43-55, 10:6-32, 15:23-41. Thus, there would be a reasonable expectation of successfully using a similar identifier for profiles 160 to allow the system to track those profiles and for different system components to easily reference specific profiles in messages. EX1002 ¶93.

**(iii) Combining Output Signal Mapping 1 and 2**

Claim 19 requires "***providing an output signal including data indicative of the selection and of user data***." As addressed above, it would have been obvious for **content processing device 110** to provide both the "***data indicative of the selection***" and the "***data indicative of the … user data***" in a single message. VII.A.1.e.i-ii. However, Petitioner presents these obviousness theories out of an abundance of caution and not because the claim language actually requires any such single "message" containing both pieces of data. Rather, the plain meaning of the claimed "***output signal***" refers to "***output[ting]***" a "***signal***" by the claimed "***aggregator***" and does not require any specific output format. For example, there is no requirement the "***data indicative of the selection***" and "***data indicative … of user data***" be transmitted simultaneously or consecutively (i.e., they can be outputted at different times) or via the same path (i.e., one piece of "***data***" can be transmitted directly while the other is forwarded via other system components). Nothing in the specification or

prosecution history compels a narrower read that imports a formatting requirement into the claim language. EX1002 ¶94.

Under the plain meaning of "***output signal***," Whitehead discloses that its **content processing device 110** "***output[s]***" a " ***signal***" containing a request for custom media channel 170 ("***data indicative of the selection***" under **Output Signal Mapping 1**, Section VII.A.1.e.i) and data for the creation and modification of profiles 160 ("***data indicative … of user data***" under **Output Signal Mapping 2**, Section VII.A.1.e.ii). EX1002 ¶95.

**(f) 19[b][i]**

Whitehead discloses **mixing server 130**, which is a "***publisher***."

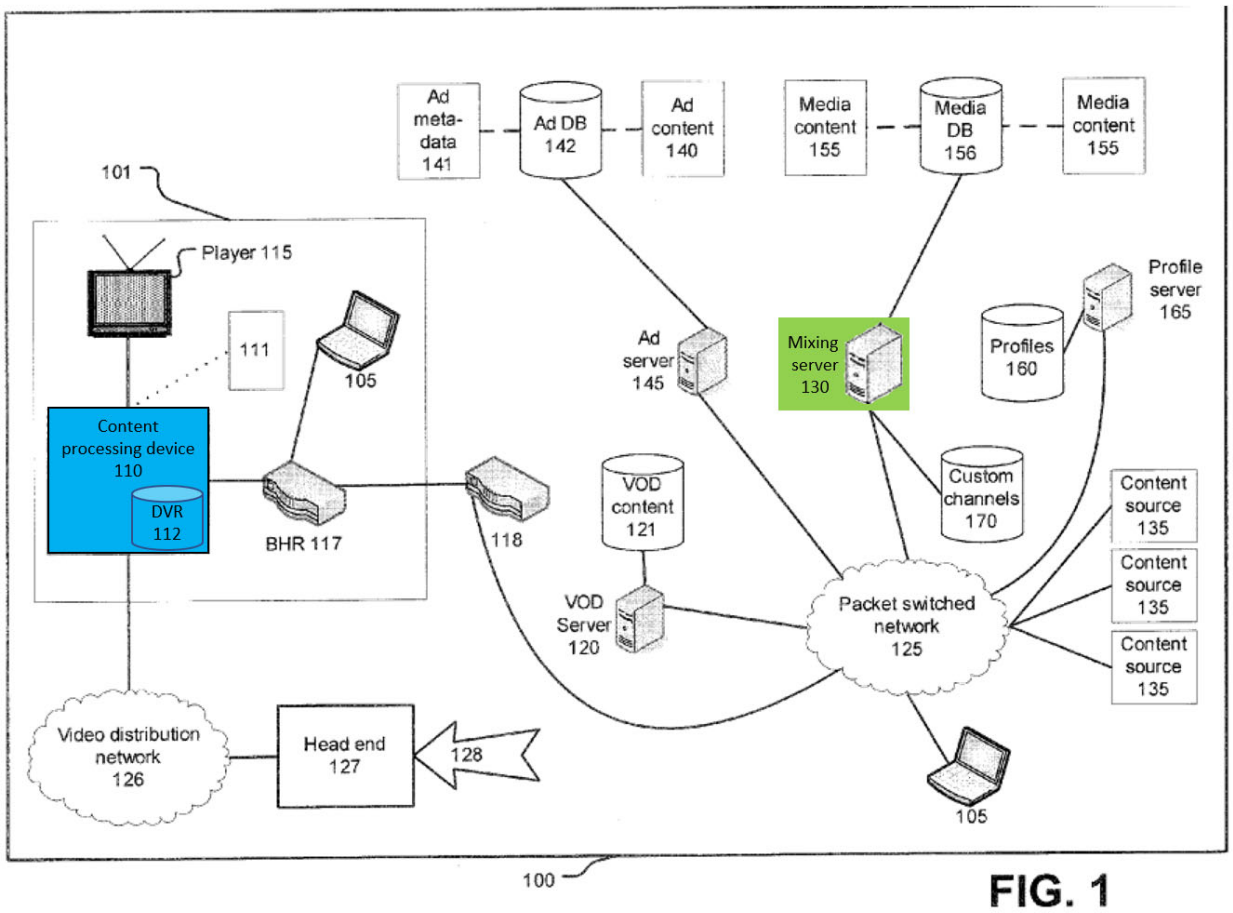


FIG. 1

The '704 patent describes the claimed "***publisher***" as a "source[] of media content." EX1001 at 6:4-16. The same is true for Whitehead's **mixing server 130**: "A basic purpose of **mixing server 130** is to assemble and deliver to **content processing device 110** one or more custom media channels." EX1003, 4:10-26. In addition, **mixing server 130** may be "combined" with VOD server 120. EX1003, 4:10-26. Thus, **mixing server 130** is a source of media content (custom media channels 170 and content from VOD server 120) for **content processing device 110** and accordingly the claimed "***publisher***." EX1002 ¶96.

**Mixing server 130** includes "***memory***" and a "***processor***." EX1003, 7:44-59; EX1002 ¶97.

**(g) 19[b][ii]**

Whitehead's **mixing server 130** receives, directly or indirectly, a request to create a custom media channel and/or corresponding profile information ("***the output signal***") from **content processing device 110**. Section VII.A.1.e; EX1002 ¶98.

**(h) 19[b][iii]**

Responsive to data received from Whitehead's **content processing device 110**, **mixing server 130** triggers "process 400" ("***at least one algorithm***") for creating custom media channel 170. EX1003, 11:38-39, 11:40-58, 12:8-17. **Mixing server 130** accesses instructions corresponding to process 400 from its memory ("***access from the memory at least one algorithm***"). EX1003, 7:44-59; EX1002 ¶99.

As part of process 400, **mixing server 130** "formulate[s] a query" to identify "media content 155, e.g., any video file or files" for inclusion in playlist 205, which in turn is used to generate custom media channel 170 ("***algorithm for selection … of media elements***"). EX1003, 12:18-37, 13:7-14. As part of process 400, **mixing server 130** also determines "the order of media content 155" in playlist 205 ("***algorithm for … sequencing of media elements***"). EX1003, 13:35-46; EX1003, 11:1-8; EX1002 ¶100.

**(i) 19[b][iv]**

Whitehead's **mixing server 130** generates a playlist 205 with a particular "order of media content 155" ("***select a temporal sequence of media programming***")[3] as the output of step 422 of process 400 ("***based on an output of the algorithm***"), and this playlist is based on the user selection of a particular custom media channel 170 ("***using the selection***") and other information from profile 160 ("***user data***"). EX1003, 11:40-58, 13:35-46; EX1002 ¶101. An exemplary "***temporal sequence of media programming***" is shown in Whitehead's Figure 2:

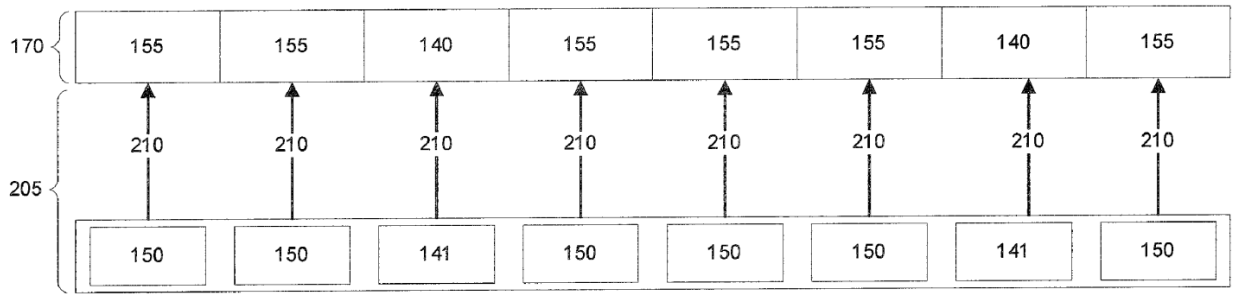


Moreover, playlist 205 includes both "***the selected media stream and other media elements***" under both **Media Stream Mapping 1** ("***selected media stream***" is the selected custom media channel 170) and **Media Stream Mapping 2** ("***selected***

[3] The order of programming in playlist 205 is a "temporal sequence" because the programming is assembled into a single file, streamed to **content processing device 110**, and displayed to the user in that order. EX1003, 8:42-64, 16:66-17:17, 20:8-21:11.

***media stream***" is a particular content source 135 corresponding to a selected custom media channel 170).

**(i) Media Stream Mapping 1**

Whitehead's **mixing server 130** generates the user-selected custom media channel 170 ("***selected media stream***") and then further inserts advertisements ("***other media elements***"). EX1003, 4:27-44, 4:53-5:3, 11:38-39, 12:38-55, 12:56-63. Those advertisements are "***other media elements***" rather than the original "***selected media stream***" because the user selects a particular custom media channel 170 without requesting the advertisements and because the advertisements are added only after generating custom media channel 170. EX1003, 12:56-63. Indeed, the '704 patent specification is clear that "***other media elements***" include "advertising," even though they are ultimately inserted into the "feed and/or streams" provided to the user in response to that user's selection. EX1001 at 12:35-13:12; EX1002 ¶102.

**(ii) Media Stream Mapping 2**

Whitehead's **mixing server 130** generates a custom media channel 170 containing material from the selected content source 135 ("***selected media stream***") and advertisements ("***other media elements***"). Specifically, Whitehead discloses that the content included in channel 170 may be identified by querying for content from a specific, user-indicated content source 135 ("***selected media stream***"). EX1003, 12:18-37, 12:64-13:14, 13:28-13:46. The content from the user-indicated

content source 135 ("***selected media stream***") is then combined with advertisements ("***other media elements***"). EX1003, 12:38-55, 12:64-13:6, 13:15-27, 13:28-46; EX1002 ¶103.

**(j) 19[b][v]**

Whitehead's **mixing server 130** assembles the content and advertisements that comprise custom media channel 170 ("***the selected media stream and the other media elements***," Section VII.A.1.i) according to the order specified by playlist 205 ("***the temporal sequence***"). EX1003, 4:10-26, 8:28-41, 8:42-64, 13:35-46; EX1002 ¶104.

**(k) 19[b][vi]**

Whitehead's **mixing server 130** then "stream[s]" the assembled custom media channel 170[4] to **content processing device 110** for display via media player 115 for example as a "single multimedia file" ("***provide[s] media programming to the user including the assembled media stream and other media elements in the temporal sequence***"). EX1003, 2:7-16, 8:42-64, 13:35-46; EX1002 ¶105.

---

[4] This includes both custom media channel 170 itself ("***media stream***" under **Media Stream Mapping 1**) and content source 135 corresponding to that custom media channel 170 ("***media stream***" under **Media Stream Mapping 2**).

### 2. Claim 20

Whitehead discloses or renders obvious that **content processing device 110** may be a "***web server***" and that the custom media channels 170 displayed by **content processing device 110** may be presented as a "***web page listing the media streams***" on computer 105 with media player 115 ("***client device***"). Specifically, Whitehead discloses that **content processing device 110** may communicate with computer 105 running media player 115 via packet switched network 125 using TCP/IP and HTTP, and that packet switched network 125 "may include the Internet." EX1003, 2:17-30, 2:52-59, 3:14-28, 10:6-32. The plain meaning of "***web server***" is software that services HTTP requests over TCP/IP; thus, **content processing device 110** may be a "***web server***." Whitehead further discloses that, "in step 510, … a menu of custom channel options may be provided as a ***webpage***." EX1003, 15:52-64. Thus, **content processing device 110** communicating via HTTP is a "***web server***," and "the menu displayed in step 510 … indicat[ing] a plurality of media channels 170 that are available for playing" (EX1003, 18:47-62) is a "***web page listing the media streams***." EX1002 ¶106.

To the extent PO argues that Whitehead does not disclose this claim, Whitehead renders this claim obvious. Internet technology, including use of "***web server[s]***" and "***web page[s]***," had become ubiquitous by the '704 patent's priority date. Indeed, using such existing technology (rather than relying on less ubiquitous

implementations) would have simplified development through use of readily available commoditized software for web servers and web pages and presented the consumer with an environment (the web) the user is already familiar and comfortable with. EX1002 ¶107

### 3. Claim 21

Whitehead discloses or renders obvious that **mixing server 130** is a "***web server***." Whitehead discloses that **mixing server 130** communicates with **content processing device 110** via "packet switched network 125" using TCP/IP and HTTP, and that packet switched network 125 "may include the Internet." EX1003, Figure 1, 3:14-28, 4:10-26, 10:6-33. The plain meaning of "***web server***" is software that services HTTP requests over TCP/IP, and **mixing server 130** is thus a "***web server***." Whitehead also discloses **content processing device 110** redirecting computer 105 with media player 115 ("***client device***") to **mixing server 130**. The '704 patent has a broad interpretation of "***redirect***" that includes both "providing instructions and addresses for a user to furnish to the browser." EX1001 at 3:18-21 Whitehead discloses that "a user of computer 105 … may select a webpage or a link in a webpage associated with a custom media channel 170." EX1003, 15:23-41; EX1003, 16:22-35. Selecting a custom media channel 170 causes **content processing device 110** to send a request to **mixing server 130** to generate the corresponding custom media channel. Section VII.A.1.e. That process, when applied

to Whitehead's disclosure of using links, involves furnishing the webpage address corresponding to **mixing server 130** to Whitehead's playback application. EX1002 ¶108.

To the extent PO argues that Whitehead does not disclose this claim, Whitehead renders this claim obvious. First, implementing **mixing server 130** as a "***web server***" would have been obvious given the ubiquity and commoditization of such technology. Section VII.A.2. Second, it would be obvious to implement Whitehead's system to "***redirect***" a user from **content processing device 110** to **mixing server 130**, since the concept of redirection between web servers long predates the '704 patent, using redirection would be easy to implement given the ubiquity and commoditization of such technology, and users would be familiar with the process and thus less suspicious of being taken to a different web page. EX1002 ¶109.

#### 4. Claim 22

Whitehead discloses or renders obvious this claim under both **Media Stream Mapping 1** ("***selected media stream***" is the selected custom media channel 170) and **Media Stream Mapping 2** ("***selected media stream***" is a particular content source 135 corresponding to a selected custom media channel 170). EX1002 ¶110.

**(i) Media Stream Mapping 1**

Whitehead discloses or renders obvious that **mixing server 130** provides a custom media channel ("***first media stream***") concatenating elements from multiple different content sources 135 ("***at least second and third media streams***"). EX1003, 5:9-23, 7:3-18, 14:23-55; Section VII.A.1.c; EX1002 ¶111.

**(ii) Media Stream Mapping 2**

Whitehead renders obvious that **mixing server 130** provides a custom media channel ("***first media stream***") concatenating elements from the corresponding content source 135 ("***second … media stream[]***") and advertising content 140 ("***third media stream[]***"). EX1003, 8:42-64. For the reasons Whitehead discloses or renders obvious that content source 135 could be a broadcast television channel (Section VII.A.1.c), Whitehead also renders obvious that advertising content 140 could also be from a broadcast television channel. Indeed, if media content 155 is from a broadcast television channel, receiving advertising content 140 also from a broadcast television channel simplifies processing, as the system can use the same receiving, processing, and concatenating technology for both types of content. EX1002 ¶112.

**(iii) Other Requirements of Claim 22**

Whitehead discloses receiving user input ("***a further user selection***") that skips to different content elements in custom media channel 170, thereby going (under **Media Stream Mapping 1**) from media content 155 from one content source

135 ("***second media … stream[]***") to media content 155 from another content source 135 ("***third media stream[]***"). EX1003, 5:56-6:9, 6:20-34, 6:47-7:2, 8:65-9:29, 18:19-62; EX1002 ¶113.

In addition, Whitehead renders obvious (under **Media Stream Mapping 2**) skipping from advertising content 140 ("***second media … stream[]***") to media content 155 from content source 135 ("***third media stream[]***"). Whitehead discloses that a user may fast forward through advertising content 140. EX1003, 6:20-34. In that situation, the benefit to the advertiser is already mostly lost, while the user is still forced to sit through the fast forwarding. A POSITA would have been motivated to simply allow the user to skip the rest of advertising content 140 to improve the user experience. Moreover, Whitehead discloses skipping between media content 155 in a playlist 205, and that disclosure is equally applicable to skipping from advertising content 140 to media content 155 in that same playlist. EX1002 ¶114.

Finally, Whitehead discloses that the custom media channel ("***first media stream***") is formed by "**concatenating** the various items of advertising content 140 and/or media content 155" into a single file. EX1003, 8:42-64; EX1002 ¶115.[5]

---

[5] During prosecution of the related '753 patent, applicant argued that "concatenate" requires clips "to link together, to unite in successive series or chain, as things depending on each other." EX1017 at 76. Whitehead meets even that definition

**5. Claim 23**

Claim 23 recites most off the same limitations as claim 19. Whitehead thus also discloses or renders obvious the corresponding limitations in claim 23. There are only two differences between the two claims. EX1002 ¶¶117-118.

First, claim 23 is directed to a method, where claim 19 is directed to a system. However, Whitehead's disclosure is equally applicable to both systems and methods of using those systems. EX1003, 22:14-40; EX1002 ¶119.

Second, claim 23 requires "***concatenate[ing]***," whereas claim 19 requires "***assembl[ing]***." However, Whitehead discloses states that "a media channel 170 may be … created by … **concatenating** the various items of advertising content 140 and/or media content 155." EX1003, 8:42-64; EX1002 ¶120.

**6. Claim 24**

Whitehead discloses receiving advertising content ("***second media stream***") and/or media content from multiple different content sources 135 (including "***second***

---

because it discloses streaming custom media channel 170 as a single file (EX1003, 8:42-64) which means the individual media content 155 and advertising content 140 are "link[ed] together" and "unite[d]" in a single video sequence and "depend[] on each other" because a media element only begins playing after the prior media element has finished playing. EX1002 ¶116.

***media stream***") and switching between content elements based on the order defined in playlist 204 ("***in accordance with the temporal sequence***"), either in response to user input to skip to another item of media content or automatically as the media content is being streamed. Section VII.A.4; EX1002 ¶121.

**7. Claim 1**

**(a) 1[pre]**

Whitehead discloses the preamble by describing systems and methods for generating and providing a custom media channel 170 ("***media programming***") for display on media player 115 ("***client***"). EX1003, Abstract, 2:7-16, 9:30-58; EX1002 ¶122.

**(b) 1[a]**

Whitehead's **mixing server 130** is an "***aggregator***" because can include a "playback application" that presents a menu of media programming available from different sources. EX1003, 15:16-22; Section VII.A.1.b; EX1002 ¶¶123-124.[6]

[6] In contrast, the analysis for claims 19 and 23 relies on the embodiment where the playback application is running on content processing device 110 (qualifying **content processing device 110** as the claimed "***aggregator***").

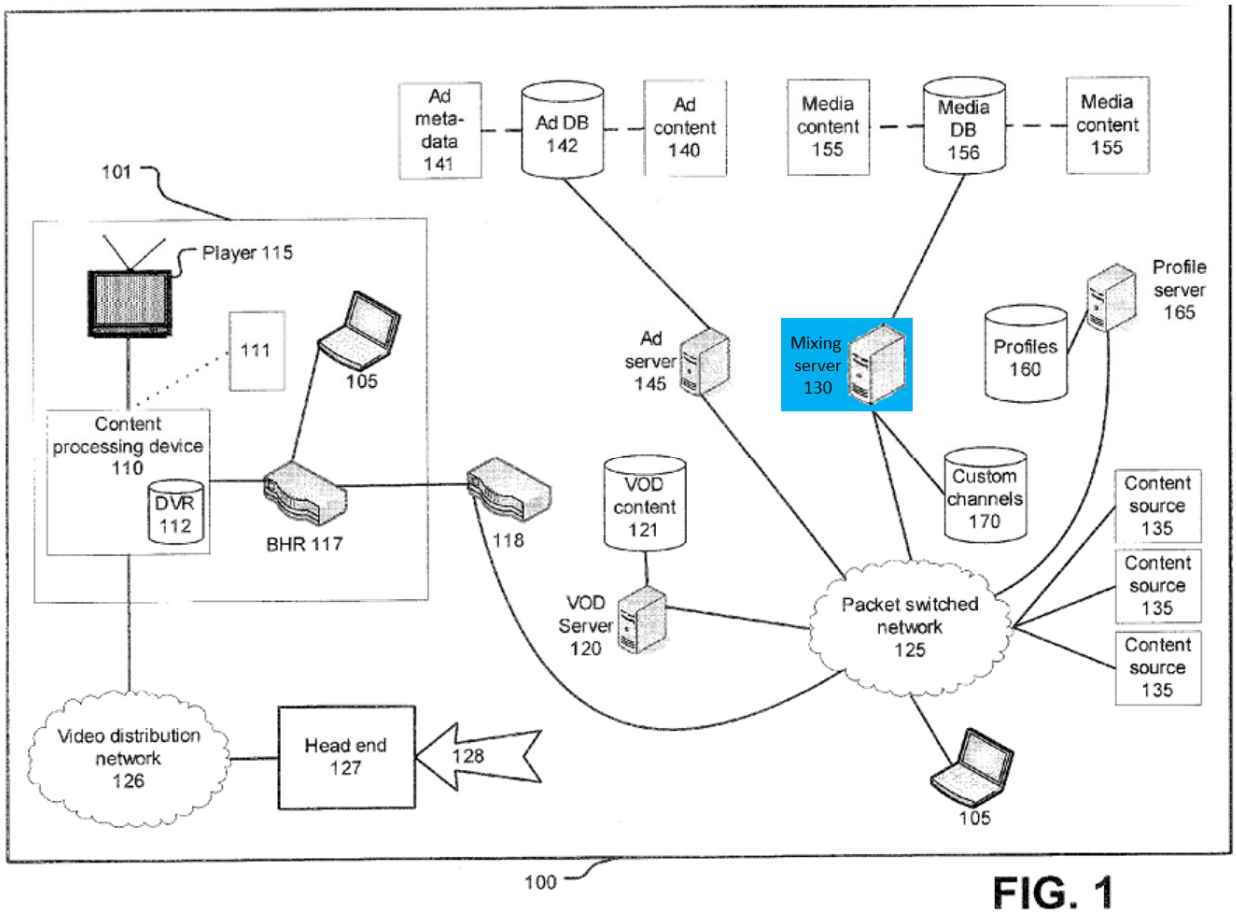


FIG. 1

Whitehead further discloses that **mixing server 130** receives metadata 150 about media content 155 available from multiple content sources 135 ("***data relating to a plurality of media streams***"). EX1003, 4:27-45, 5:9-23. Moreover, Whitehead discloses or renders obvious that its content sources 135 are broadcast television channels and thus provide "***media streams***." Section VII.A.1.c; EX1002 ¶¶125.

**(c) 1[b]**

Whitehead's **mixing server 130** accesses information from profile 160 for a particular custom media channel ("***user information***"). EX1003, 4:27-45, 7:3-18, 11:59-12:37; EX1002 ¶126.

**(d) 1[c]**

Whitehead's **mixing server 130** generates a playlist 204 identifying media content 155 and an order for that media content 155 in custom media channel 170 ("***a temporal sequence of media programming***") from multiple content sources 135 ("***media streams***") based on media metadata 150 ("***data relating to the plurality of media streams***") and profile 160 ("***user information***"). EX1003, 4:10-26, 4:27-44, 8:28-41, 13:35-46, FIG. 2; EX1002 ¶127.

**(e) 1[d]**

Whitehead discloses or renders obvious that **mixing server 130** accesses media content 155 from content sources 135 ("***plurality of media streams***") over packet switched network 125 ("***network***"). Specifically, content sources 135 provide media content 155 that is then stored in content database 156. EX1003, Fig. 1; EX1003, 5:9-23. From there, **mixing server 130** accesses the content database 156 (again over packet switched network 125 ("***network***")) to retrieve media content 155 originally received from content sources 135 ("***plurality of media streams***"). EX1003, 5:9-23; EX1002 ¶128.

To the extent PO argues that the "accessing" requires **mixing server 130** to "***access[]***" content sources 135 directly (rather than via storage in content database 156), Whitehead discloses or renders this limitation obvious. **Mixing server 130** is connected to content sources 135 via packet switched network 125 ("***network***"),

whereas media database 156 containing media content 155 from those data sources 135 is only connected to content sources 135 via **mixing server 130**. EX1003, Fig. 1. Thus, media database 156 is populated by **mixing server 130** accessing content sources 135 ("***plurality of media streams***") over packet switched network 125 ("***network***"). Even if not discloses, Whitehead at least renders this implementation obvious it is easily implementable within the context of Whitehead's existing network topology in Figure 1, whereas other implementations would require introducing additional servers and/or connections. EX1002 ¶129.

**(f) 1[e]**

Whitehead discloses that its **mixing server 130** streams custom media channel 170 ("***media programming***"), via content processing device 110, to media player 115 ("***client***") as, for example, a "single multimedia file" consisting of "concatenat[ed]" media content 155 and/or advertising content 140. EX1003, 2:7-16, 8:42-64; EX1002 ¶130.

**8. Claim 2**

Whitehead discloses that its **mixing server 130** can be implemented as a "***web server***." Section VII.A.3; EX1002 ¶131.

**9. Claim 3**

Whitehead discloses that **mixing server 130** may be a computer workstation, desktop, notebook, laptop, or handheld computer with software stored in memory

executed by a processor ("***client memory device***" and "***client processor***"). EX1003, 2:7-16, 7:19-59; EX1002 ¶132.

**10. Claim 4**

Whitehead discloses that **mixing server 130** may include an interactive program guide ("***electronic program guide***"). EX1003, 4:45-52, 15:23-41, 19:44-63; EX1002 ¶133.

**11. Claim 5**

Whitehead discloses that its user profile ("***user information***") includes "a history of items of media content 155 that a user has viewed in a custom media channel 170" ("***past usage information of the user***"). EX1003, 13:47-61; EX1002 ¶134.

**12. Claim 6**

Whitehead discloses that its custom media channel 170 includes "***video***," and Whitehead's streaming using, e.g., a "single multimedia file, e.g., an MPEG file" is a "***video feed***." EX1003, 2:40-51, 5:9-23, 8:42-64; EX1002 ¶¶135.

**13. Claim 7**

Whitehead discloses that its **mixing server 130** can be implemented as a "***web server***." Section VII.A.3. **Mixing server 130** "provid[es] programming such as video to media player 115" ("***client***") via packet-switching network 125 ("***network***"). Section VII.A.7.f; EX1003, Fig. 1; EX1002 ¶¶136.

### 14. Claim 8

Whitehead discloses that custom media channel 170 ("***media programming***") may be displayed on a television set that a user can "tune[]" to that channel, thereby disclosing that custom media channel 170 is provided as "***a television channel***." EX1003, 2:7-16, 11:40-58; EX1002 ¶137.

### 15. Claim 9

Whitehead discloses that its custom media channel 170 ("***media programming***") can include "audio content." EX1003, 4:53-5:3. At the time of the '704 patent's priority date, one type of audio content that was growing in popularity was "***podcast[s]***." EX1012 ("With the benefit of hindsight, it all seems quite obvious. MP3 players, like Apple's iPod, in many pockets, audio protection software cheap or free, and weblogging an established part of the internet; all the ingrediencies are there for a new boom in amateur radio."). Thus, a POSITA would be motivated and have a reasonable expectation of success in providing Whitehead's audio content as a "***podcast***." EX1002 ¶138.

The same is true for using an "***XML feed***," "***RSS feed***," or "***Atom feed***" to provide programming – all of these were well known transmission formats before the priority date of the '704 patent, and a POSITA would be motivated to and have a reasonable expectation of being able to use any of these existing transmission

formats rather than undertake the burden and risk of designing a new format. EX1002 ¶¶139.

### 16. Claim 10

Whitehead's playback application (when incorporated into **mixing server 130**, EX1003, 15:16-22) discloses or renders obvious this claim for at least the reasons identified above in connection with the "***presenting a plurality of media streams to a user***," "***receiving a signal having data indicative of a selection of one of the media streams***," and "***provide media programming to the user including the [selected and] assembled media stream and other media elements in the temporal sequence***" limitations of claim 19. Section VII.A.1.c, d, k, Section VII.A.7.f; EX1002 ¶140.

### 17. Claim 11

Whitehead discloses that **mixing server 130** allows the user to highlight one of the available custom media channels (each of which in turn could correspond to a particular content source 135) in its menu ("***one of the displayed media streams***") and then play the selected custom media channel 170 ("***the highlighted media stream***") on a media player 115 ("***user display***"). EX1003, 16:22-35, 18:47-62; EX1002 ¶141.

Moreover, Whitehead renders obvious displaying the selected custom media channel 170 ("***the highlighted media stream***") together with the menu listing

available customer media channels ("***a list of media streams***"). Whitehead discloses that its custom media channels 170 are made available to users in the context of a program guide UI. EX1003, 4:45-52, 15:23-41, 19:44-63. Displaying a preview for a highlighted channel alongside programming information was a well-known program guide UI configuration since at least the 1990s. For example, the program guide described in U.S. Pat. No. 6,388,714 (filed April 11, 1997, issued May 14, 2002, § 102(b) art) presents "the shows that are being presented on each channel" alongside a preview window area 728 displaying "a short preview of the show that is currently being highlighted in show matrix 706." EX1013 at 17:41-44, 18:11-17, Fig. 1; EX1002 ¶142.

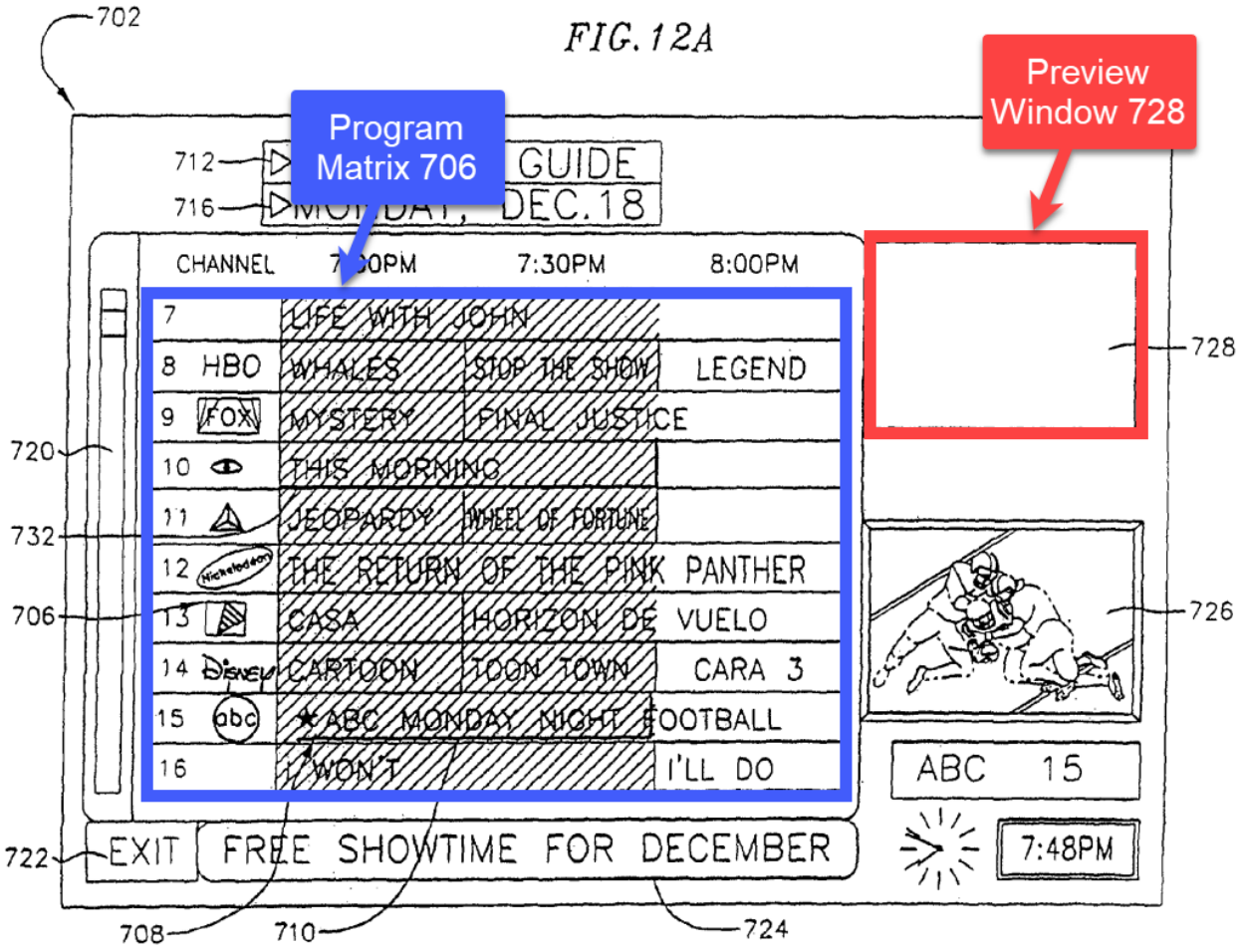


It would be obvious to use a program guide UI configuration that both the developer and user would be familiar with, such as the one shown above. From the developer perspective, using such a known UI configuration would simplify the design process (plus, there would be a reasonable expectation that such a known UI configuration would be successful). From the consumer perspective, users prefer familiar UIs. In addition, displaying both a listing of available custom media channels 170 and a preview of a currently highlighted custom media channel 170 would facilitate browsing, since a user would be able to observe the content of the

highlighted custom media channel 170 while still having the opportunity to highlight a different custom media channel 170 if the user is dissatisfied with that content. EX1002 ¶143

**18. Claim 12**

Whitehead discloses that profile 160 ("***user information***") may include information "indicat[ing] an interest in receiving a particular media file or set of media files" ("***identity of a media element***"). EX1003, 10:46-67. Whitehead also discloses allowing the user to identify a particular item of media content and to request "show me more like this" (alternative "***identity of a media element***") EX1003, 18:63-19:15; EX1002 ¶144.

Moreover, it would have been obvious that the media element playing as a preview of a highlighted custom media channel 170 ("***a media element playing on the displayed highlighted media stream prior to the receipt of the user selection***")[7] is reflected in profile 160 ("***user information***"). Displaying that media element identified in profile 160 in response to highlighting the media stream provides helpful information to the user as to the media element most likely to be sought by the user (since it was specifically requested) or most informative as to the nature of the highlighted media stream (if user requested "more" media elements "like this").

[7] *See* Section VII.A.17 for display of a preview window.

Plus, there would be a reasonable expectation of success, since displaying a preview of a media element was well known in the art, and the display process is agnostic as to which media element is selected for display. EX1002 ¶¶145.

**19. Claim 13**

Whitehead discloses that custom media channel 170 may be dynamically generated in "near real-time." EX1003, 11:40-58. But "near real-time" is different from "real time." Thus, there is a short interval after the user selects custom media channel 170 and before that custom media channel 170 is generated ("***a first time period***") where non-custom programming is played ("***predetermined media programming***"). After the system completes this processing ("***after the first time period***"), it begins playing the custom programming ("***providing media programming responsive to the user information***"). EX1002 ¶¶146

Moreover, it would have been obvious during this "***first time period***"—before dynamic programming becomes available—to instead provide "***predetermined media programming***." For example, it would be obvious to play a predetermined advertisement during this time. Whitehead already discloses that advertisement need not be based on user information. EX1003, 12:38-55. Showing the user a predetermined advertisement rather than forcing the user to just wait while custom media channel 170 is being created would generate additional advertising revenue and lower the likelihood the user loses interest while waiting for custom media

channel 170. Moreover, there is a reasonable expectation of success since Whitehead already discloses providing such predetermined advertisements. EX1002 ¶147.

**20. Claim 14**

Whitehead discloses that media metadata 150 ("***the data related to the plurality of media streams***") includes "for a particular item of media content 155 … a subject matter associated with media content 155" and "one or more keywords associated with the multimedia content 155, etc.," thereby "***categorizing***" the media content 155 based on its "***character***." EX1003, 5:9-23, 7:3-18; EX1002 ¶148.

Moreover, it would be obvious that Whitehead's "subject matter categories" and "keywords" assigned to media content 155 are "***subjectively determined***." As of the '704 patent's priority date, media analysis and AI technology had not advanced to the point where assigning categories and keywords to media content could be fully automated without any human input. Rather, at some point in the processing pipeline, a human would assign or confirm assignment of such categories and keywords, thereby rendering them "***subjective[]***." Having a human involved in this manner would be the most straightforward implementation due to the unreliability of automated processes to make that assessment alone, and having a human make that assessment or confirm auto-generated assessments would be easier to implement than attempting to fully automate the process. EX1002 ¶149

### 21. Claim 15

Whitehead discloses that profile 160 ("***user information***") includes "a history of items of media content 155 that a user has viewed in a custom media channel 170 ("***viewing history***"), "subject matter categories of interest to the user" and other information on the user's "interest[s]," including that "media content 155 relating to a first category of media content, e.g., sports, is of more interest to a user than media content 155 relating to a second category, e.g., weather" ("***user preference data***"), and "one or more keywords … for keyword searches or queries" ("***search queries***"). EX1003, 7:3-18, 10:46-67, 12:18-37, 13:35-61; EX1002 ¶150.

### 22. Claim 16

Whitehead discloses that its media content 155 from content sources 135 ("***media streams***") are associated with "***keywords***," which are then used to select and order media content 155 in custom media channel 170 ("***in determining the temporal sequence***"). EX1003, 5:9-23, 7:3-18, 10:46-67, 12:18-37, 18:47-62, 19:16-38; EX1002 ¶151.

It would have been obvious for those "***keywords***" to be derived by **mixing server 130**, and further to then "***derive[] additional keywords from a map of synonyms***," potentially with a human operator confirming the accuracy of those derived keywords. For example, Whitehead's content sources 135 actually or obviously include broadcast television sources (Section VII.A.1.c), which may not

provide sufficient metadata or at least not in the format needed by **mixing server 130**. However, systems for deriving keywords (and then deriving additional keywords therefrom based on a thesaurus database) from broadcast television were well known in the art. For example, U.S. Pat. No. 7,467,398 (filed Mar. 21, 2002, issued Dec. 16, 2008, § 102(e) art) describes receiving a "closed captioned text signal" alongside cable television and using keywords obtained either from that text signal or by analyzing the audio signal. EX1014 at 3:11-4:8. Such systems also include "theasaurus database[s]" such that searches would not be limited to just the express keywords but further include "relevant synonyms" derived from those same keywords. EX1014 at 4:9-26; EX1002 ¶152.

A POSITA would be motivated to implement such a system as part of **mixing server 130** to derive its own keywords and further "synonym" keywords for use in creating Whitehead's custom media channels 170. Doing so would allow **mixing server 130** broader flexibility in defining the format and content of those keywords rather than relying on keywords (if any) generated by other entities for potentially different purposes. Doing so would also improve processing efficiency, since **mixing server 130** would not need to determine whether and in what format each source provides keywords and to contend with differently formatted keywords from different sources. Moreover, given the established nature of technology for deriving keywords, including specifically in the field of broadcast television, a POSITA

would have a reasonable expectation of successfully implementing this system in Whitehead's context. EX1002 ¶153

**23. Claim 17**

Whitehead discloses that custom media channel 170 includes advertising content 140 ("***media elements***") and renders obvious that the advertising content 140 is a "***media stream***." Section VII.A.4.

Whitehead further renders obvious that the advertising content 140 includes "***labels indicative of payment due from an advertiser and payment due to a content provider***." Whitehead recognizes that "[i]ncluding advertising content 140 in custom media channel 170 advantageously provides additional revenue opportunity for a provider of system 100." EX1003, 12:38-55. It was also well known before the '704 patent's priority date that some content sources require subscription fees (e.g., HBO) or one-time payments (e.g., PPV). Thus, Whitehead's system would receive revenue from advertisers and may need to make payments to content providers. It would be obvious to track the incoming revenue ("***payment due from an advertiser***") and outgoing expenses ("***payment due to a content provider***") via Whitehead's advertising metadata 141 and media metadata 150 ("***labels***"). Maintaining the payment-related information with other information about the advertising and media content eliminates the need for a separate database just for the payment-related information, makes the payment-related information accessible as part of the same

search used to identify the advertising and media content, and thereby simplifies payment processing. Moreover, a POSITA would have a reasonable expectation of success since the POSITA would be merely using existing metadata databases to store additional information. EX1002 ¶154

#### 24. Claim 18

Whitehead discloses that this media content 155 is stored ("***cach[ed]***") in media database 156 for subsequent inclusion (alongside content 155 from other content sources 135) in custom media channel 170 according to the timing defined in playlist 205 ("***whereby switching between streams at optimal times is facilitated***"). EX1003, 5:9-23, 8:42-64, 11:1-8, 11:40-58, 12:18-37, 13:7-14, 13:35-46, 16:66-17:17, 20:8-21:11; EX1002 ¶¶155.

### B. <u>Ground 2:</u> Whitehead and Marcus '904[8]

#### 1. Motivation to Combine & Reasonable Expectation of Success

A POSITA would have modified Whitehead's **mixing server 130** to incorporate Marcus '904's algorithm (running on Marcus '904's receiver) for receiving, selecting, ordering, and assembling different media streams (both for content and advertising) for at least the following reasons:

[8] All limitations of the challenged claims not expressly addressed in Ground 2 are disclosed or rendered obvious by Whitehead for the reasons in Ground 1.

***More choices***: Having many different content sources to choose from when generating custom media programming is desirable because it makes it more likely the system will identify content best suited for a particular user. Similarly, additional advertising choices allow for more targeted advertising and/or an opportunity to maximize revenue. Modifying Whitehead's system to incorporate the content and advertising sources described in Marcus '904 thus improves Whitehead's ability to target content and advertising to a particular user. EX1002 ¶158.

***Incorporating Marcus '904's content and advertising sources would unlock new revenue sources for Whitehead***: Marcus '904 states that it facilitates generating revenue from transmitting content from niche content and advertising sources. EX1005 ¶¶5-13. A POSITA would be motivated to use Marcus '904's content and advertising sources to unlock additional potential sources of revenue for Whitehead's system. EX1002 ¶159.

***Incorporating aspects of Marcus '904's content selection and concatenation algorithm improves Whitehead's efficiency***: Marcus '904 describes generating custom media programming by starting targeted content or advertising into a "primary" stream. EX1005 ¶¶48, 82-87, 148, 237, 251, 594. By starting with or having as fallback Marcus '904's "primary" stream, rather than individually selecting each piece of media content, Whitehead's system would need to select fewer pieces of media content for its custom media channel. EX1002 ¶160.

***Similar field of art***: Both Whitehead and Marcus '904 generate custom media programming based on a user profile. EX1003, Abstract; EX1005 ¶¶82-87; EX1002 ¶161.

***Whitehead already teaches different content sources (including broadcast sources) and focusing a custom media channel on a specific content source***: Whitehead discloses different content sources, including broadcast television content sources, and further discloses that a particular user profile can identify a specific content source. Section VII.A.1.c. Thus, incorporating Marcus '904's teachings would not require redesigning Whitehead's architecture and instead merely supplements Whitehead's disclosure. EX1002 ¶162.

***Software modification would be predictable***: Petitioner's proposed modification can be implemented entirely in software and does not require any hardware modifications. Indeed, Whitehead acknowledges that such modifications are possible. EX1003, 19:64-20:6, 22:26-40; EX1002 ¶163.

### 2. All Claims

All independent claims require "***a plurality of media streams***." As addressed in Ground 1, **Media Stream Mapping 2**[9] maps the claimed "***plurality of media streams***" onto Whitehead's content sources 135. Marcus '904 further renders obvious that Whitehead's content providers 135 are "***media streams***." Marcus '904 expressly discloses a "receiver" that receives "a plurality of tagged media streams" and "assembles" those "media streams" into "programming." EX1005 ¶¶34, 37-42, 48; EX1002 ¶164.

### 3. Claims 22 and 24

Claim 22 requires "***at least second and third media streams***," and claim 24 requires "***a second media stream***." As addressed in Ground 1, this "second" or "third" media stream corresponds to Whitehead's advertising content 140. Marcus '904 further renders obvious that such advertising content can be received in the form of a "***media stream***." EX1005 ¶¶48, 252, 275; EX1002 ¶165.

### 4. Claims 18 and 24

Claim 18 requires "***caching by the aggregator the media streams prior to providing the elements in the media programming, whereby switching between***

---

[9] For **Media Stream Mapping 1**, there should be no dispute that Whitehead's custom media channels are "media streams." Whitehead expressly teaches "stream[ing]" these channels. EX1003, 8:42-64; EX1002 ¶165.

***streams at optimal times is facilitated***," and claim 24 requires "***switching at least between the selected media stream and the second media stream in accordance with the temporal sequence***." Marcus '904 further renders obvious these caching and switching steps. EX1005 ¶¶250-252, 301, 641; EX1002 ¶166.

**5. Claim 17**

Marcus '904 further discloses storing media with "headers" ("***labels***") indicating an advertiser's "willingness, or contractual commitment, to underwrite the delivery and/or creation of all or part of the value-item" ("***indicative of payment due from an advertiser***") or "the relative royalties each creator will receive from the anticipated download of the item." EX1005 ¶¶464, 469, 520, 547-575, 580, 582. When Marcus '904's advertising and content media streams (including these headers) are added to Whitehead, the resultant system renders obvious claim 17. EX1002 ¶167.

**6. Claims 1[a]-[e], 19[b], 23[b]**

As addressed in Ground 3, Marcus '904 discloses all aspects of the challenged claims pertaining to selecting, ordering, and assembling media programming by a "***publisher***." Section VII.C.2.g. To the extent any of those elements are missing from Whitehead, they are rendered obvious by Marcus '904. EX1002 ¶168.

### C. Ground 3: Cristofalo and Marcus '904

#### 1. Motivation to Combine & Reasonable Expectation of Success

A POSITA would have modified Cristofalo's transmitting system 102 (for claims 19-24) or Cristofalo's receiving system 104 (for claims 1-18) to incorporate Marcus '904's algorithm (running on Marcus '904's receiver) for receiving, selecting, ordering, and assembling different media streams (both for content and advertising) for at least the following reasons:

***Cristofalo's transmitting system 102 benefits from targeting content to specific users by incorporating the teachings in Marcus '904 (claims 19-24)***: In describing targeting performed by transmitting system 102, Cristofalo states that "[i]nstead of creating a unique media object for each user's profile, the process preferably pushes media objects to specific users based upon user identifiers." EX1004 ¶48. Cristofalo recognizes, however, "as bi-directional data link throughput capacity increases, various other routing techniques may be utilized to push media object based targeted advertising and programming to users." EX1004 ¶48. Indeed, Cristofalo expressly states that "the present invention may be utilized in a unicast environment (i.e., where the content/media objects are transmitted to a single user)." EX1004 ¶¶9, 19. And transmission capacity did, in fact, increase since Cristofalo's filing in 2001. Section IV.A. Thus, once transmission capacity increased, a POSITA would seek out technologies that permit further customization for specific users.

Marcus '904 discloses such technology. Specifically, Marcus '904 includes additional disclosure of targeting media programming to specific users, leading to better customization of media programming by Cristofalo's transmitting system 102 (with Cristofalo's receiving system 104 retaining ability to insert media objects as overlays, EX1004 ¶41). EX1002 ¶170.

***Cristofalo's receiving system 104 benefits from additional flexibility by incorporating the teachings in Marcus '904 (claims 1-18)***: Cristofalo discloses that its receiving system 104 selects specific media objects to play or overlay based on user profile information. EX1004 ¶¶36, 41. However, Cristofalo's receiving system 104 only inserts those media objects in specified slots and does not further customize the sequence of media elements in the media programming. Modifying Cristofalo's receiving system 104 to implement Marcus '904's selection, ordering, and assembly algorithm will allow Cristofalo's receiving system 104 to customize the sequence of media elements. EX1002 ¶172

***Incorporating Marcus '904's content and advertising sources would unlock new revenue sources for Cristofalo (all claims)***: Marcus '904 states that it facilitates generating revenue from transmitting content from niche content and advertising sources. EX1005 ¶¶5-13. A POSITA would be motivated to use Marcus '904's content and advertising sources to unlock additional potential revenue sources for Cristofalo's system. EX1002 ¶173.

***Similar field of art (all claims)***: Both Cristofalo and Marcus '904 generate custom media programming. EX1004 at Abstract; EX1005 ¶¶82-87; EX1002 ¶174.

***Cristofalo already includes the framework necessary for implementing Marcus '904's selection, ordering, and assembly algorithm (all claims)***: Cristofalo discloses that both its transmitting system 102 and receiving system 104 have access to use profile information and customize media programming based on the same. EX1004 ¶¶35-36, 44, 49. Thus, incorporating Marcus '904's teachings would not require redesigning Cristofalo's architecture and instead merely supplements Cristofalo's disclosure. EX1002 ¶175.

***Software modification would be predictable (all claims)***: Petitioner's proposed modification can be implemented entirely in software and does not require any hardware modifications. Indeed, Cristofalo acknowledges that such modifications are possible. EX1004 ¶57; EX1002 ¶176.

**2. Claim 19**

**(a) 19[pre]**

Cristofalo discloses "[a] a system and process for targeting programming (including, but not limited to, advertising) to users." EX1004 at Abstract, ¶46; EX1002 ¶177.

**(b) 19[a][i]**

Cristofalo discloses **receiving system 104**, which is an "***aggregator***," and **transmitting system 102**, which is the claimed "***publisher***" (Section VII.C.2.e).

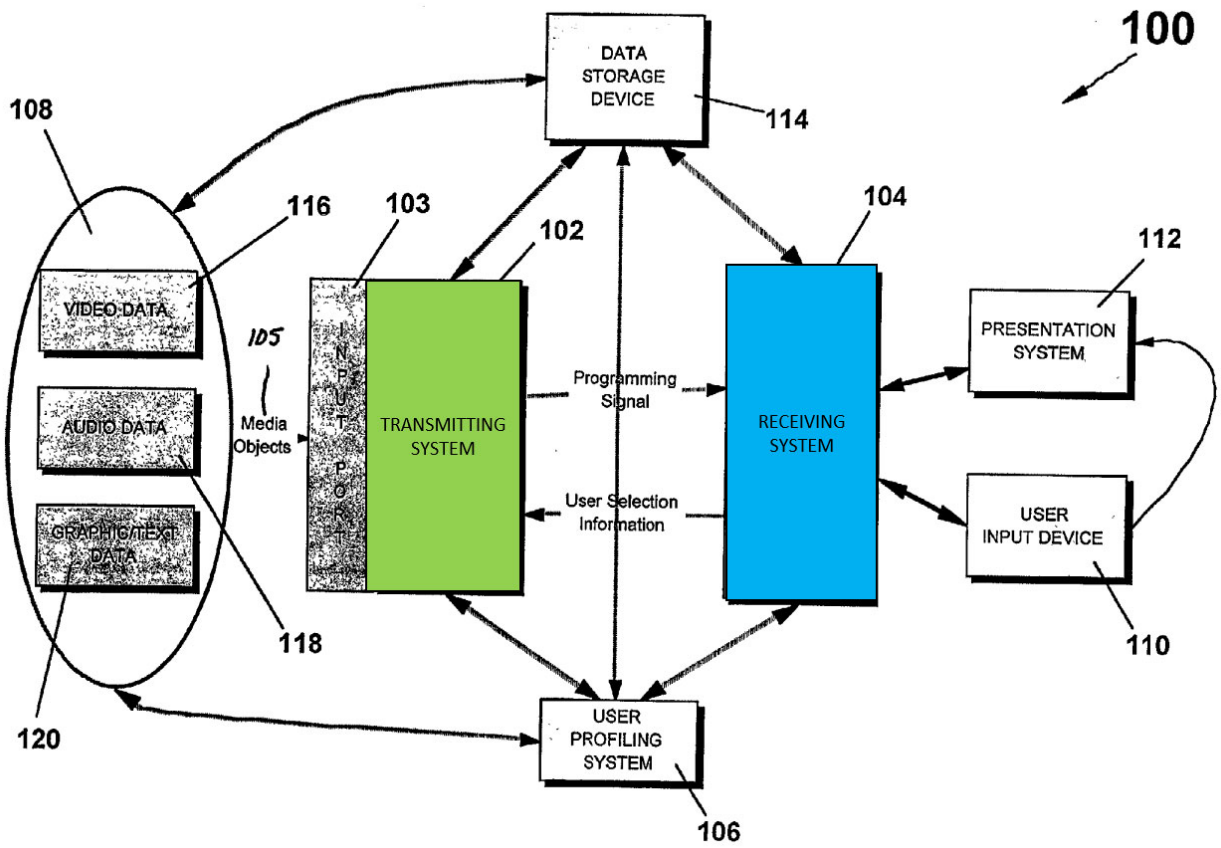


The '704 patent specification describes an "***aggregator***" as "provid[ing] a presentation element to user 1 120 and 2 130." EX1001 2:44-47, 3:6-18. Cristofalo similarly discloses that its **receiving system 104** allows a user to "select[] the described programming … to be received and presented" from among "numerous programming options." EX1004 ¶46. Cristofalo further discloses that those "programming options" can be from different "media object creators 108, broadcasters, local affiliates, and others," such as "a cable signal … contain[ing] numerous programming signals (i.e., ABC, CBS, FOX, etc.)." EX1004 ¶¶29, 37, 52; EX1002 ¶179.

Cristofalo further states that **receiving system 104** "may be provided in hardware and/or software formats." EX1004 ¶27. Implementing **receiving system 104** in software necessarily requires "***memory***" for storing an executable of that software and a "***processor***" for executing the same. EX1002 ¶180.

**(c) 19[a][ii] & 19[a][iii]**

For Cristofalo's user to be able to "select[] the desired programming" from "numerous programming options" (EX1004 ¶46), Cristofalo's **receiving system 104** necessarily presented the user with the programming options (e.g., different broadcast channels) ("***presenting a plurality of media streams to a user***"), and the system then received user input (via user device 110) corresponding to that selection ("***receiving a signal having data indicative of a selection of one of the media streams***"). EX1004 ¶¶20, 25, 29, 32, 49; EX1002 ¶181.

Moreover, it would have been obvious to implement **receiving system 104** as a program guide for presenting programming options from different channels ("***presenting a plurality of media streams to a user***") and receiving a user selection of one of those channels. A program guide was a well-known UI for interacting with television sources even before the '704 patent's priority date. EX1013 (filed April 11, 1997, issued May 14, 2002, § 102(b) art) at Fig. 12A:

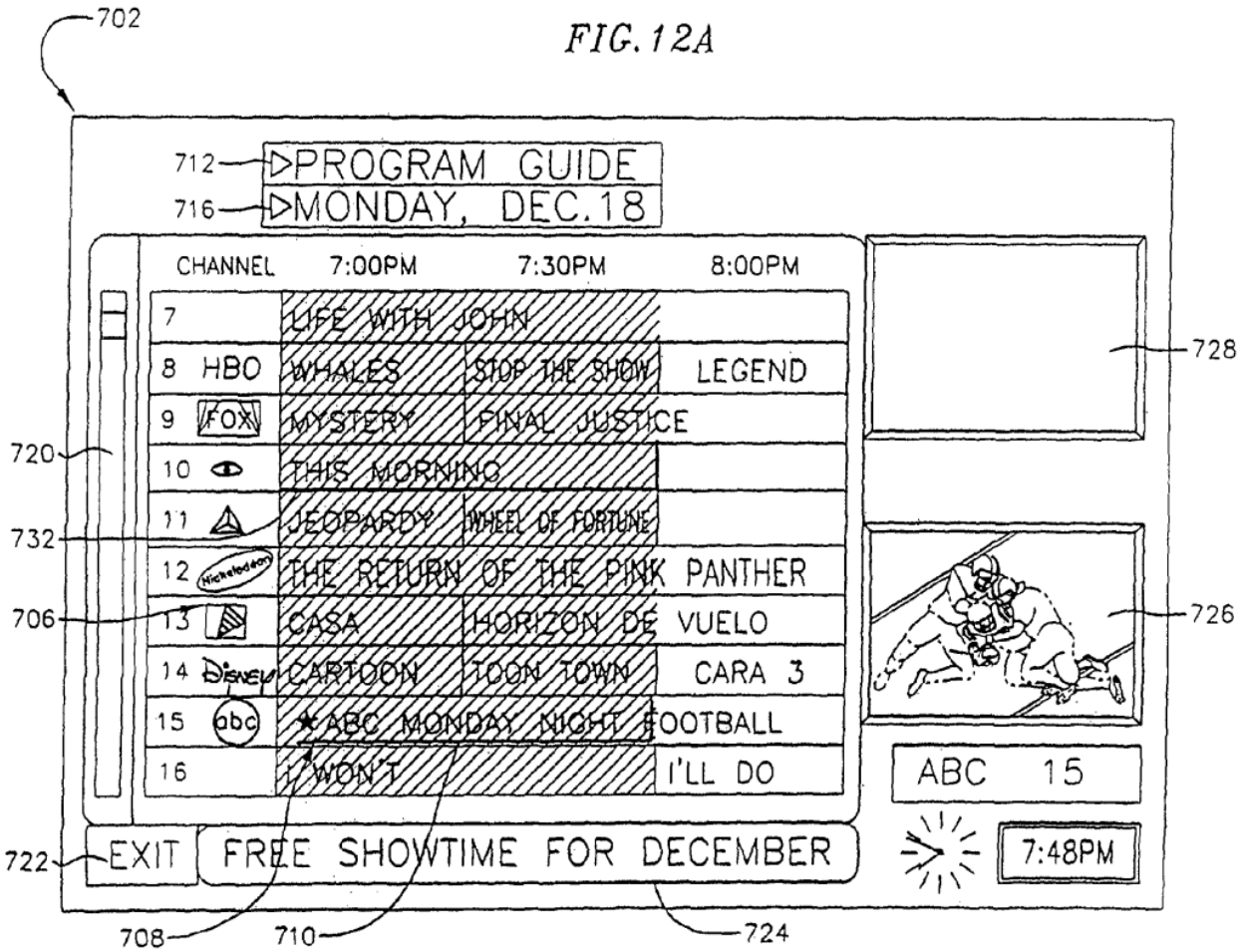


A POSITA implementing Cristofalo would be motivated to present users with a UI they were already familiar with and would thus find it obvious to use a program guide. Using such a well-known system would also ensure there is a reasonable expectation the implementation would be successful. EX1002 ¶¶182-183.

**(d) 19[a][iv]**

Cristofalo further states that its **receiving system 104** provides "the user's choice of programming" ("***output signal including data indicative of the selection***") to Cristofalo's **transmitting system 102**. EX1004 ¶46; EX1004 at Fig. 1 ("User

Selection Information"). Cristofalo also discloses that its **receiving system 104** provides information on programs selected by the user and content to receive ("***output signal including data indicative … of user data***") to **transmitting system 102**. Specifically, **receiving system 104** provides this user profile information ("***user data***") to user profiling system 106, which in turn is co-located with **transmitting system 102**. EX1004 ¶¶37, 39. Ultimately, the user profile information ("***user data***") is received and used by **transmitting system 102**. EX1004 ¶¶28, 37-39, 47, 53. EX1004 at FIG. 1 (highlighting "***output signal***"); EX1002 ¶184.

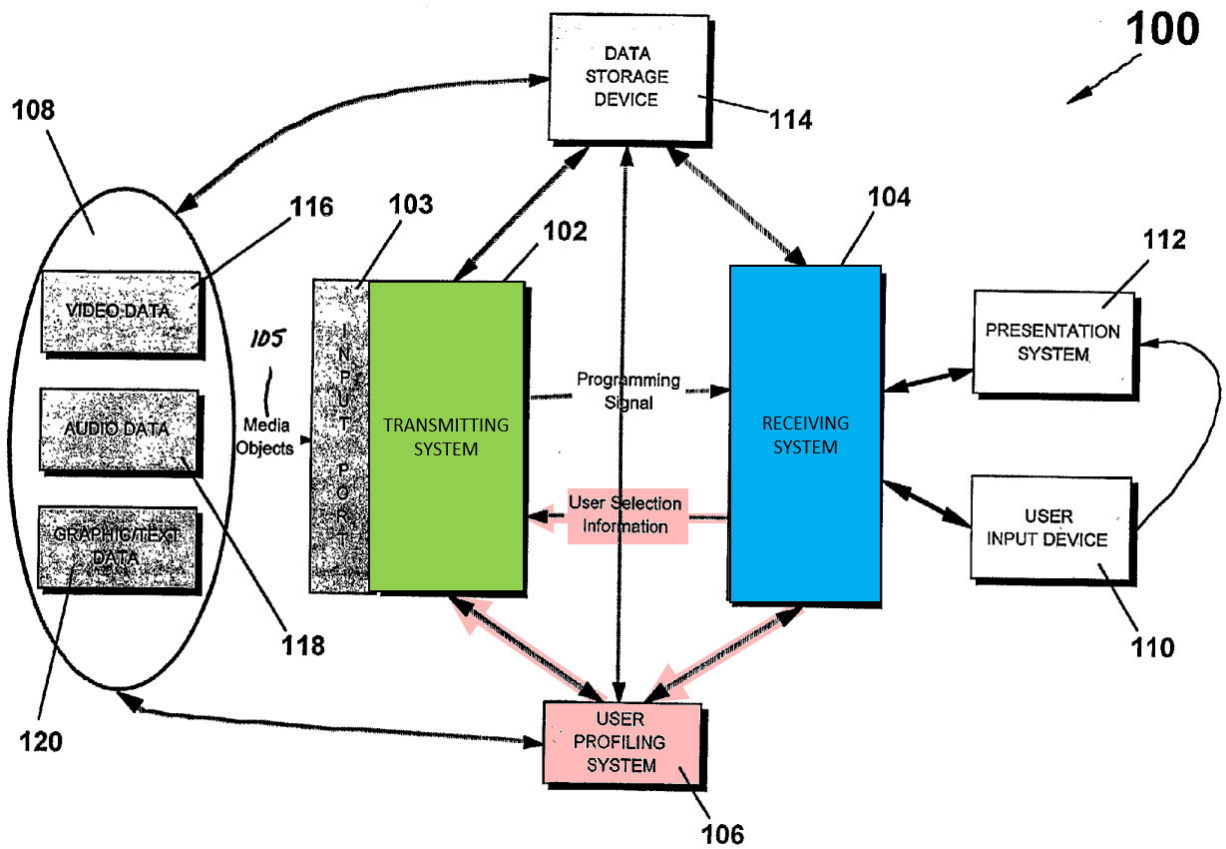

The claimed "***output signal***" is not limited to a specific format and does not require sending both "***data indicative of the selection***" and "***data indicative … of user data***" in a single message. Section VII.A.1.iii. Thus, Cristofalo discloses this claim limitation. EX1002 ¶185

Even if the claimed "***output signal***" requires a single message, Cristofalo renders this limitation obvious. A POSITA would be motivated to combine the user selection and any user profile information necessary for customizing the programming in a single message such that **transmitting system 102** receives some or all relevant information at the same time. For example, the message could contain both the user's choice and the user's geographic information to facilitate targeting content based on location (EX1004 ¶35), which would be especially desirable for presentation systems 112 that are a mobile device (EX1004 ¶24) and the user's location may thus be different each time the user chooses programming to watch. As another example, receiving all relevant user profile information together with the user's choice eliminates the need for further processing and delay associated with retrieving or correlating profile information. Moreover, there would be a reasonable expectation of success given the amount of data that can be transmitted in a single message. Section VII.A.1.e; EX1002 ¶186.

**(e) 19[b][i]**

Cristofalo's **transmitting system 102** is a "***publisher***."

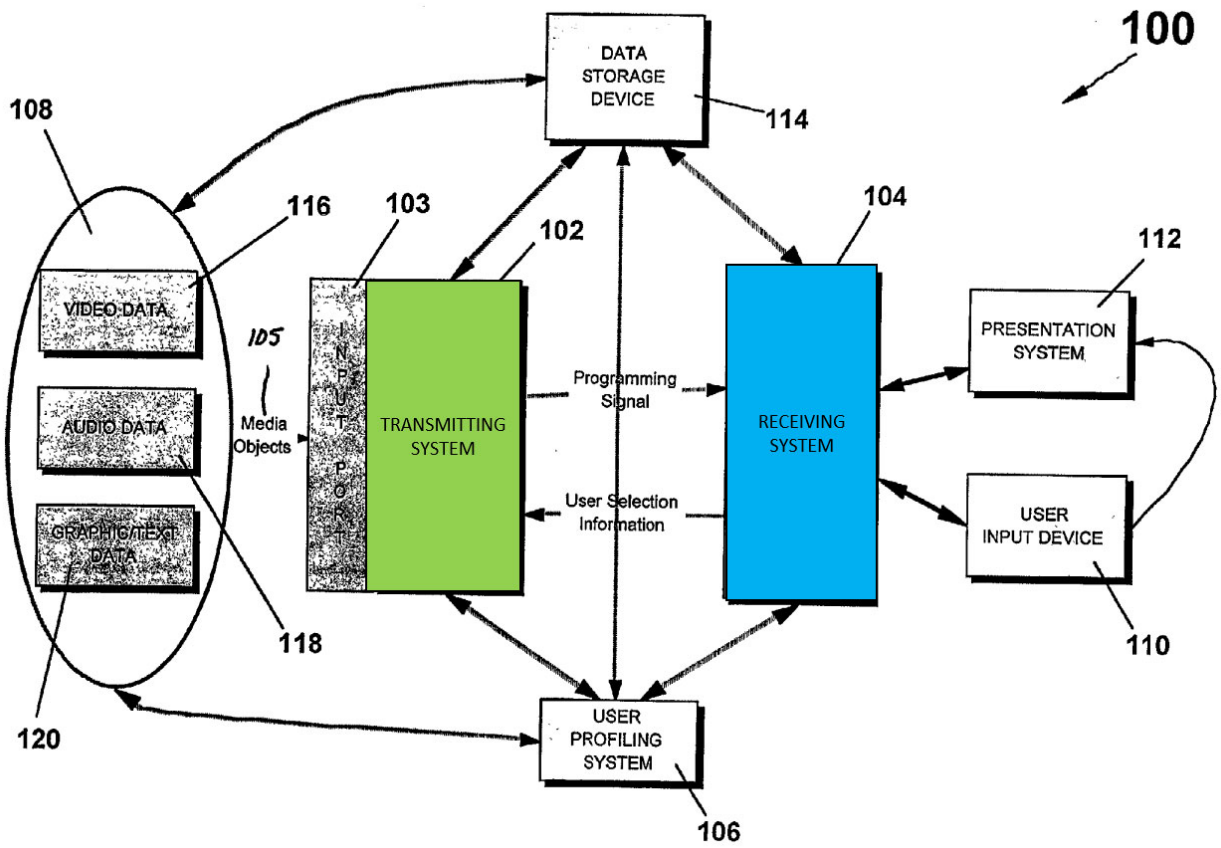


The '704 patent describes the claimed "***publisher***" as a "source[] of media content." EX1001 at 6:4-16. The same is true for Cristofalo's **transmitting system 102**: it is the source of programming (e.g., media objects) for **receiving system 104** and ultimately for the user. EX1004 ¶¶9, 19, 22, 34, 38, 47-48, 54; EX1004 at Fig. 1 (**transmitting system 102** sending "Programming Signal" to **receiving system 104**). EX1002 ¶187.

**Transmitting system 102** "may include any "medium, system, or device capable of communicating media object oriented content to a user," such as over "the Internet." EX1004 ¶21. Communication over the Internet is done by computers,

and computers necessarily have "***memory***" storing software instructions to be executed and a "***processor***" for executing the same. At a minimum, implementing **transmitting system 102** as a computer with "***memory***" and a "***processor***" would be the most natural and efficient (and thus obvious) implementation solution. EX1002 ¶188

**(f) 19[b][ii]**

Cristofalo's **transmitting system 102** receives the user's choice and user profile information ("***the output signal***") from **receiving system 104**. Section VII.C.2.d; EX1004 at FIG. 1 (highlighting "***output signal***"); EX1002 ¶189.

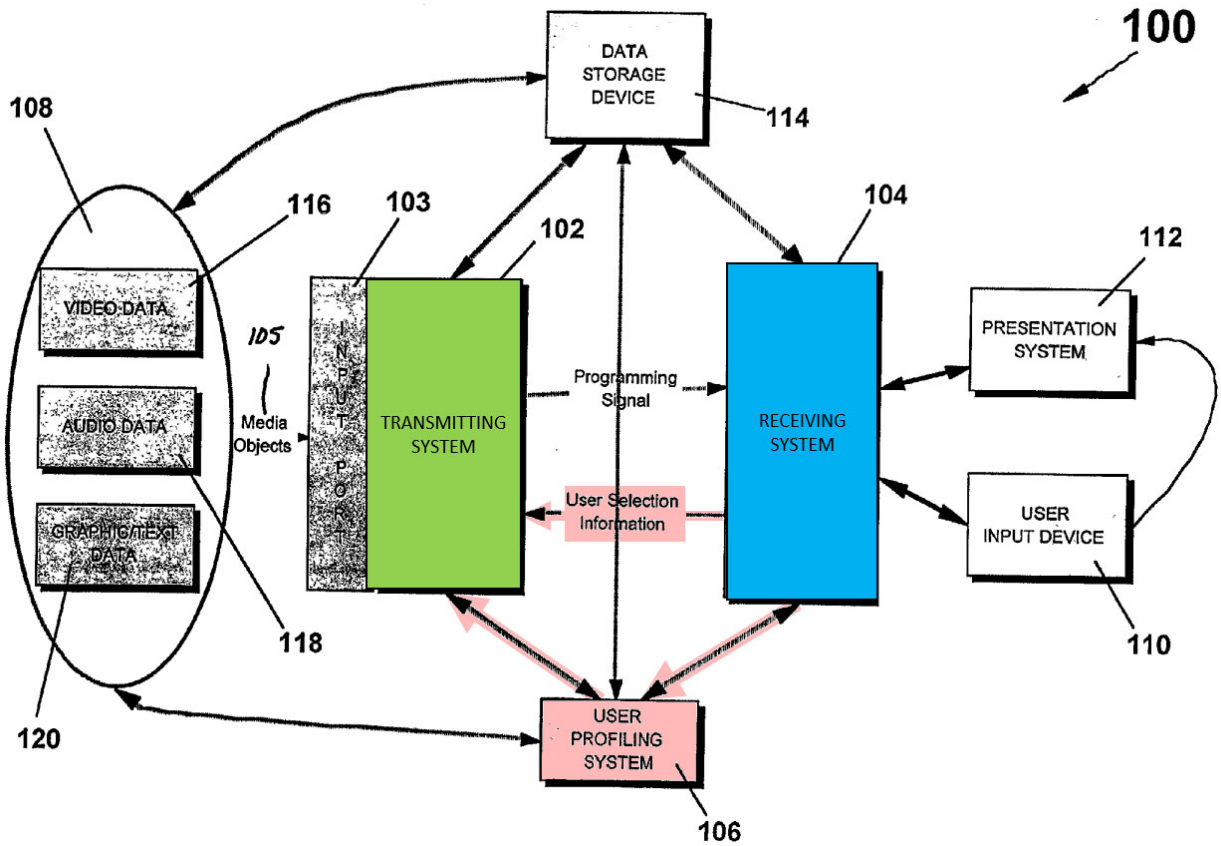

**(g) 19[b][iii]-[vi]**

Cristofalo's **transmitting system 102** generates media programming consisting of media objects based on the user's choice and user profile information ("***access from the memory at least one algorithm for selection and sequencing of media elements***") and provides that media programming to the user ("***provide media programming to the user***"). EX1004 ¶¶9, 19, 22, 34, 38, 47-48, 54; EX1004 at FIG. 1 ("programming signal"); EX1002 ¶190.

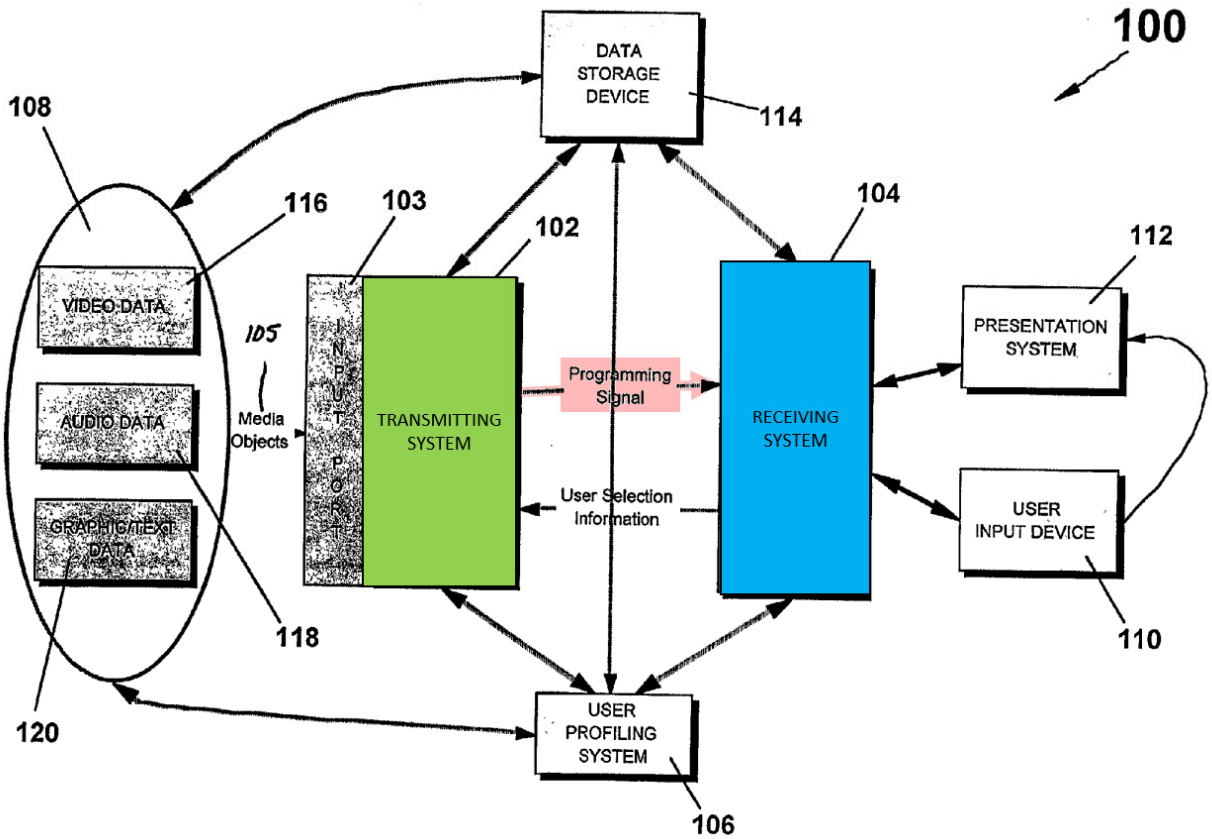


Moreover, Marcus '904 addresses the lack of detail in Cristofalo regarding targeting by **transmitting system 102** by describing a receiver 100 that "collects media" from different "media source[s]" and "assembles a program from the

collected media." EX1005 ¶30. Specifically, Marcus '904's receiver "selects media elements from the media streams for inclusion in the programming based upon the user data" and then "arranges the selected data elements into an order based upon the user data" ("***select a temporal sequence of media programming***"). EX1005 ¶40. The media elements include both a "primary" stream desired by the user ("***the selected media stream***") and additional media elements, such as advertising or other programming ("***other media elements***"). EX1005 ¶37-42, 48, 148, 252, 275. Marcus '904 then assembles these media elements in the arranged order ("***assemble the selected media stream and the other media elements in the temporal sequence***") and streams the resultant media programming to the user ("***provide media programming to the user including the assembled media stream and other media elements in the temporal sequence***"). EX1005 ¶¶40, 48, 148-49; EX1002 ¶191.

Finally, Marcus '904 further incorporates by reference Marcus '156, which provides additional details regarding the selection, ordering, and assembly of media elements into media programming for a particular user. EX1005 ¶30; EX1008 at 8:1-9:21 (describing "Editor Program" that "selects and orders" clips), 9:22-10:8 (describing "Assembly Program"). The '704 patent relies on incorporating by reference that same Marcus '156 prior art reference for the exact same disclosure. EX1001 at 1:18-23, 5:40-47, 9:18-28, 9:43-47, 10:12-14. Thus, Marcus '904, at least via its incorporation of Marcus '156, discloses the very same "***algorithm for***

***selection and sequencing of media elements***" and associated steps described and claimed in the '704 patent. EX1002 ¶192.

**3. Claim 20**

Cristofalo renders this claim obvious. Cristofalo discloses that its **receiving system 104** communicates with presentation systems 112 that include "web tablets" and "web phones." EX1004 ¶24. To support such "web"-based devices, a POSITA would be motivated to implement **receiving system 104** as a "***web server***" that displays available programming options as "***web page[s]***." This would be the format users of such devices are most familiar with, and would it be readily implementable using existing Internet/web technologies. Section VII.A.2; EX1002 ¶193.

**4. Claim 21**

Cristofalo renders this claim obvious. Cristofalo discloses that its **transmitting system 102** transmits media objects over "an Internet connection." EX1004 ¶22. A POSITA would be motivated to implement **transmitting system 102** communicating over the Internet as a "***web server***" and to redirect communication to that web server, since this is a format most Internet users would be familiar with, and it be readily implementable given the ubiquity of these Internet/web technologies even before the '704 patent's priority date. Section VII.A.3; EX1002 ¶194.

### 5. Claim 22

Cristofalo's **transmitting system 102** streams media programming to users ("***provides a first media stream***"). EX1004 ¶22. In the proposed obviousness combination, this programming concatenates (1) a desired media stream, such as a particular channel (either "***first media stream***" or "***second … media stream[]***") and (2) advertising or other programming from other streams ("***third media stream[]***"). Section VII.C.2.g; EX1005 ¶¶87, 237, 287 (addressing concatenating); EX1008 at 14:13-17 (same). Cristofalo further discloses that a user then interacts with the system ("***in response to a further user selection***") to receive additional content ("***content preferentially from one of the second and third media streams***"). EX1004 ¶¶52-56. To the extent not expressly disclosed in Cristofalo, it would be at least obvious for Cristofalo's user to be able to request (pull) additional media objects after receiving the initial desired programming alongside the advertising or other programming (push). The two types of interactions are complimentary (user received push of media objects as part of selecting a desired program, and can then pull additional media object while watching that program), and making both approaches available at different stages in the viewing experience provides the benefits of both approaches. EX1002 ¶195.

### 6. Claim 23

Claim 23 recites most of the same limitations as claim 19. Cristofalo and Marcus '904 thus also render obvious the corresponding limitations in claim 23. There are only two differences between the two claims. EX1002 ¶¶117, 196.

First, claim 23 is directed to a method, where claim 19 is directed to a system. Cristofalo, however, discloses both methods and systems. EX1004 at Abstract; EX1002 ¶197.

Second, claim 23 requires "***concatenate[ing]***," whereas claim 19 is directed to "***assembl[ing]***." This "***concatenate[ing]***" is disclosed by Marcus '904. EX1005 ¶¶87, 237, 287; EX1008 at 14:13-17; EX1002 ¶198.

### 7. Claim 24

In the proposed obviousness combination, the programming provided to the user consists of (1) a desired media stream, such as a particular channel ("***selected media stream***") and (2) advertising or other programming from other streams ("***second media stream***"). Section VII.C.2.g. Marcus '904 further discloses that these media streams are assembled by switching between them according to the determined selection and order of media elements ("***switching at least between the selected media stream and the second media stream in accordance with the temporal sequence***"). EX1005 ¶¶250-252, 301, 641; EX1002 ¶199.

### 8. Claim 1

#### (a) 1[pre]

Cristofalo discloses the preamble. Section VII.C.2.a, VII.C.6; EX1002 ¶200.

#### (b) 1[a]

Cristofalo discloses a **receiving system 104**, which is an "***aggregator***." Section VII.C.2.b.

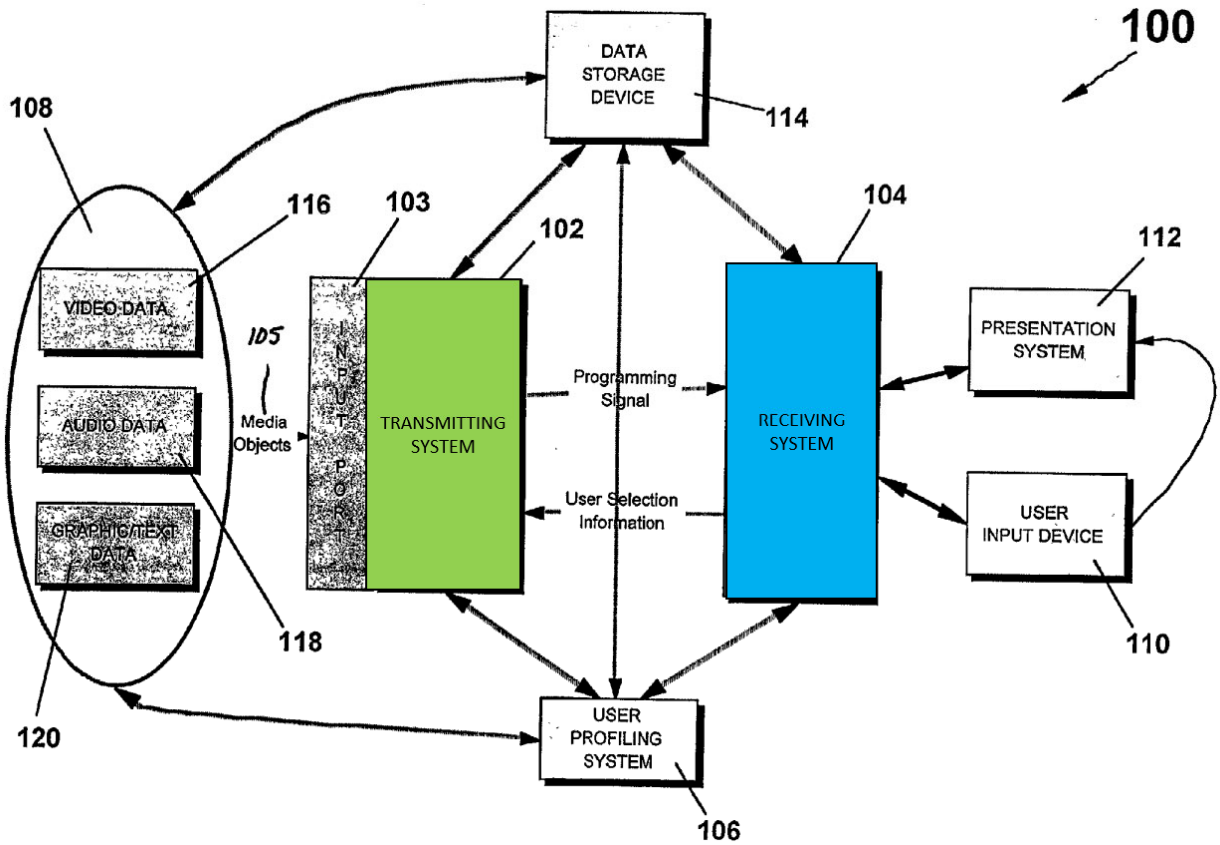


Cristofalo further discloses that its **receiving system 104** receives "user identifiers" ("***data***") relating to received media objects, which (when combined with Marcus '904) are "***media streams***." EX1004 ¶48; Section VII.C.2.c, g. Marcus '904 similarly describes that receiving tags ("***data***") related to media streams (EX1005

¶34), confirming that the combination of implementing Marcus '904's selecting, ordering, and assembling at **receiving system 104** meets this limitation. EX1002 ¶¶201-202

**(c) 1[b] – 1[e]**

Cristofalo discloses that its **receiving system 104** access user profile information and, based on that user information and user identifiers, generates custom media programming that is provided to presentation system 112 ("***client***"). EX1004 ¶¶24, 36, 38-41, 47-49. When **receiving system 104** is further combined with Marcus '904's selection, ordering, and assembly algorithm, the combination renders obvious the "***accessing***," "***determining***," and "***providing***" limitations. Section VII.C.2.g; EX1005 ¶¶87, 237, 287 (addressing concatenating); EX1008 at 14:13-17 (same); EX1002 ¶203.

In addition, **receiving system 104** receives ("***accessing***") media objects (which when modified by Marcus '904 are the claimed "***the plurality of media streams***") over the Internet ("***network***"). EX1004 ¶¶21-22. Marcus '904 similarly discloses "***accessing***" those media streams over the Internet ("***a network***"). EX1005 ¶17; EX1002 ¶204.

**9. Claim 2**

Cristofalo discloses that its **receiving system 104** can be implemented as a "***web server***." Section VII.C.3; EX1002 ¶205.

**10. Claim 3**

Cristofalo discloses that **receiving system 104** is a client relative to at least **transmitting system 102**, thereby rendering its memory a "***client memory device***" and its processor a "***client processor***." Section VII.C.2.d, VII.C.2.e; EX1002 ¶206.

**11. Claim 4**

Cristofalo renders obvious having its **receiving system 104** present the user with the programming options in the context of "***an electronic program guide***." Section VII.C.2.c; EX1002 ¶207.

**12. Claim 5**

Cristofalo discloses that its user profile information ("***user information***") includes information on programs the user selected and content received ("***past usage information of the user***"). EX1004 ¶39; EX1002 ¶208.

**13. Claim 6**

Cristofalo discloses that its media programming may include a video feed. EX1004 ¶22, 44; EX1002 ¶209.

**14. Claim 7**

Cristofalo renders obvious that its **receiving system 104** can be implemented as a "***web server***" providing custom media programming to "web phones" or "web tablets" over the Internet ("***via a network***"). Section VII.C.4; EX1002 ¶210.

**15. Claim 8**

Cristofalo discloses that its presentation system 112 ("***client***") include "television receivers" and that media programming is received as "channels" and "sub-channels" ("***television channel***"). EX1004 ¶¶24, 29; EX1002 ¶211.

**16. Claim 9**

Cristofalo renders this claim obvious. Cristofalo discloses that its media programming can be audio programming. EX1004 ¶¶27. At the time of the '704 patent's priority date, one type of audio programming that was growing in popularity, and that would be obvious to use, are "***podcast[s]***." Section VII.A.15. Cristofalo also renders obvious other well-known transmission formats, such as an XML, RSS, and Atom. Section VII.A.15; EX1002 ¶212.

**17. Claim 10**

The combination of Cristofalo and Marcus '904 renders this claim obvious for at least the reasons identified above in connection with the "***presenting a plurality of media streams to a user***," "***receiving a signal having data indicative of a selection of one of the media streams***," and "***provide media programming to the user including the [selected and] assembled media stream and other media elements in the temporal sequence***" limitations of claim 19. Section VII.C.2.c, g, Section VII.C.8.c; EX1002 ¶213.

### 18. Claim 11

Cristofalo is silent as to how its UI is configured, but it would be obvious to use a UI configuration (such as a program guide) that both the developer and user would be familiar with. Section VII.C.2.c. It was further well known that such a program guide UI allows the user to highlight a channel ("***one of the displayed media stream***") and then displays a preview for a highlighted channel ("***the highlighted media stream***") alongside programming information ("***a list of media streams***"). This is shown, for example, by U.S. Pat. No. 6,388,714 (filed April 11, 1997, issued May 14, 2002, § 102(b) art). Section VII.A.17; EX1013 at 17:41-44, 18:11-17, Fig. 1; EX1002 ¶214.

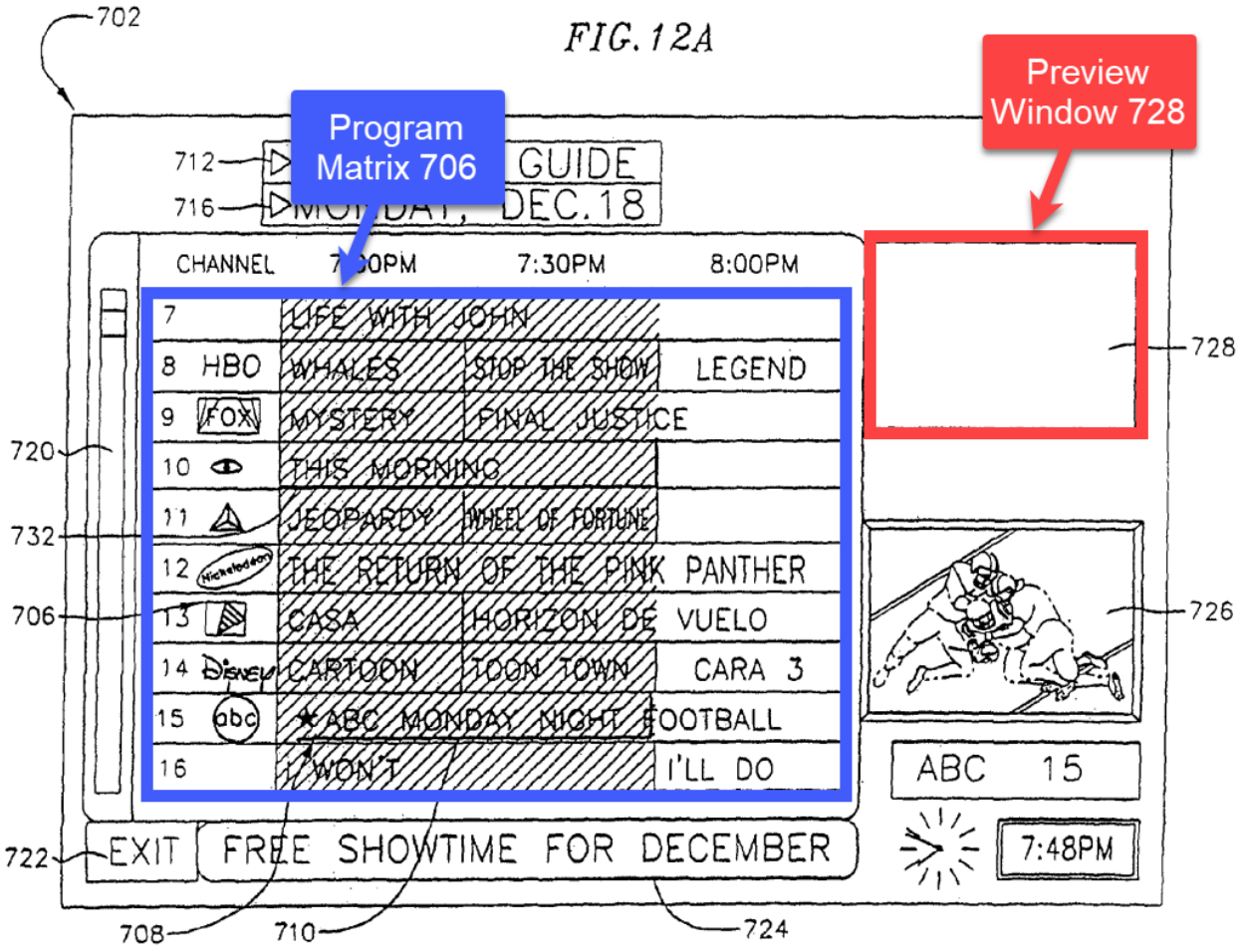


### 19. Claim 12

Cristofalo discloses that its user profile information tracks "[a]s the user selects programs and content to receive." EX1004 ¶39. When Cristofalo is implemented using a program guide UI, this user profile information would obviously include information on channels highlighted by the user and content received as a preview ("***identity of a media element playing on the displayed highlighted media stream prior to the receipt of the user selection***"). Tracking details regarding a user's interactions with a program guide and the benefits of doing

so were well known in the art. EX1006 at 28:11-30:45. A POSITA would be motivated to capture broad information about a user's interactions with the program guide to glean further insights into the user's interests. For example, the system could track which channels a user highlights for longer periods of time, and the system could deem such actions indicative of user interest in the highlighted channel. And given the availability of this software technology, there would be a reasonable expectation of success. EX1002 ¶215.

**20. Claim 13**

In the proposed combination of Cristofalo and Marcus '904, the generated media programming consists of a desired program selected by the user from available media programming ("***predetermined media programming***") and other data elements inserted in response to the user profile information ("***media programming responsive to the user information***"). Section VII.C.2.g. In this combination, the desired program plays initially ("***during a first time period***"), and the other media elements only play once they are reached ("***a second time period after the first time period***"). EX1002 ¶216.

**21. Claim 14**

Marcus '904 discloses that "Macro-tags containing the defining tagging characteristics of the show are … created in advance of the airing." EX1005 ¶321. Thus the received tags ("***data related to the plurality of media streams***") include

media "***characteristics***." Moreover, such "***characteristics***" are obviously "***subjective[]***" since at the time of the '704 patent's priority date, it was easier and more accurate to have a human user identify or confirm media "***characteristics***." Section VII.A.20; EX1002 ¶217.

**22. Claim 15**

The combination of Cristofalo and Marcus '904 renders obvious that the user profile information includes "***viewing history, user preference data and search queries***." EX1004 ¶¶32, 34, 39, 48, claim 2; EX1008 at 9:9-14; EX1005 ¶669. Each of these categories of information was disclosed in either Cristofalo or Marcus '904, and tracking these categories of information as part of the user profile information would further improve targeting, since more information allows a profile to be more specific / better target content. EX1002 ¶218.

**23. Claim 16**

Marcus '904 discloses "clip-specific tags" that are "swiftly added" by its algorithm. EX1005 ¶¶39, 321. Moreover, it would have been obvious for those "clip-specific tags" to be "***keywords***," and further to then "***derive[] additional keywords from a map of synonyms***," potentially with a human operator confirming the accuracy of those derived keywords. Systems for deriving keywords (and then deriving additional keywords therefrom based on a thesaurus database) were well known in the art, and those systems also used "theasaurus database[s]" to further

expand the range of relevant keywords. EX1014 at 3:11-4:8; Section VII.A.22. A POSITA would be motivated to implement such a system as part of **receiving system 104** to derive clip-specific tags, including keywords, and further "synonym" keywords to allow the system to generate its own keywords/synonyms. Section VII.A.22; EX1002 ¶219.

**24. Claim 17**

Cristofalo discloses targeting media objects in the form of advertising. EX1004 ¶38. Marcus '904 further discloses that payment information (such as royalties due for streaming content) can be tracked via "headers" ("***labels***") included with media content. EX1004 ¶¶464, 469, 520, 547-575, 580, 582. For example, these "headers" ("***labels***") may indicate an advertiser's "willingness, or contractual commitment, to underwrite the delivery and/or creation of all or part of the value-item" ("***indicative of payment due from an advertiser***") or "the relative royalties each creator will receive from the anticipated download of the item" ("***payment due to a content provider***"). EX1004 ¶¶520, 582. Incorporating headers in this manner would be further obvious because doing so would simplify the process of settling money to be exchanged between the various entities involves and would be as simple as adding an additional data field or header to an existing database or data structure. Section VII.A.23; EX1002 ¶220.

### 25. Claim 18

Cristofalo combined with Marcus '904 renders obvious generating the custom media programming by caching media streams and switching between streams. EX1005 ¶¶250-252, 301, 641; EX1002 ¶221.

## D. Secondary Considerations

Secondary considerations further weigh in favor of obviousness, and in any event cannot overcome the strong showing of obviousness. First, market trends incentivized development work into generating custom media programming for specific users and resulted in simultaneous development by multiple entities. Section IV.A-B. Second, PO alleges in its complaint that its product, "StimTV," launched in 2005 and won an award in 2007. EX1011 ¶12. But significantly, PO does not allege that this product practiced the '704 patent. Indeed, if it did, StimTV would constitute invalidating prior art under § 102(b). Thus, PO seemingly never deemed the '704 patent sufficiently valuable/innovative to practice its claims. And even if PO eventually did release a product practicing the '704 patent, PO ceased operations at some point in time, evidencing a lack of success for any product practicing the '704 patent. EX1002 ¶222.

# VIII. NO BASIS FOR DISCRETIONARY DENIAL

## A. 35 U.S.C. § 325(d) Supports Institution

The Board should not exercise its discretion under § 325(d). None of the prior art relied upon in this Petition was considered by the examiner. EX1001 at 1. Indeed, PO did not even disclose its own Marcus '904 prior art reference to the patent office.

In addition, the art cited in this Petition is not cumulative of the art considered by the Examiner. The limitation relied upon by applicant to gain allowance is clearly disclosed by the prior art cited herein. Section VII.A.1.i-k, VII.B.2, VII.C.2.g.

## B. *Fintiv* Supports Institution

District court litigation has not commenced in earnest. Petitioners are filing this IPR petition a month before their answer is due. The six *Fintiv* factors thus strongly favor institution.

### 1. Overlap Between Issues

While PO has not yet identified the set of asserted claims, this Petition challenges all '704 patent claims. Accordingly, no matter what claims PO asserts in district court, all those claims will also be at issue here. On the other hand, Petitioner has not yet served their invalidity contentions. Thus, there is no basis for concluding that there is substantive overlap in invalidity theories.

### 2. Likelihood of a Stay

Neither party has requested a stay in the district court in part because the district court case is not yet underway. The likelihood of a stay is increased here,

however, by the fact that Petitioners are filing this IPR petition before answering the complaint and are filing concurrent IPR petitions against all asserted patents.

#### 3. Proximity of the Court's Trial Date to a FWD

No trial date has been set. Indeed, no case schedule of any kind has been entered, nor has a Rule 26(f) conference been held. At Judge Gilstrap's most-recent, July 2024 scheduling conferences, the Court assigned trial dates from January to April 2026. *See*, *e.g.*, *Avant Location Techs., LLC v. Samsung Elec. Co. Ltd.*, No. 2:24-cv-00133-JRC , Dkt. 36 (E.D. Tex. Aug. 5, 2024); *Alto Dynamics, LLC v. Gucci Am., Inc.*, No. 2:24-cv-00375, Dkt. 29 (E.D. Tex. Aug. 2, 2024). This case is scheduled for a case management conference on September 18, 2024. *NTECH Properties, Inc. v. ByteDance Ltd.*, No. 2:24-cv-00130-JRG, Dkt. 13 (E.D. Tex. Aug. 8, 2024). By then, Judge Gilstrap will presumptively be assigning trial dates starting in May 2026. If that is the case, then the PTAB will issue its final written decision ***before*** any district court trial.

#### 4. Investment in the Parallel Proceeding

Although PO filed a district court complaint on February 23, 2024, investment in the parallel proceeding has been nonexistent. PO did not serve the complaint until June 14, 2024. The parties then stipulated to an answer deadline of September 16, 2024. There have been no other case developments and no discovery. The district court has also invested zero time in assessing the parties' claims and defenses.

Moreover, Petitioner is filing this IPR a mere two months after being served with the complaint—almost 10 months before its statutory bar date (June 14, 2025).

### 5. Whether the Petitioner and the Defendant in the Parallel Proceeding are the Same Party

The parties are the same in this IPR and in the Litigation.

### 6. Other Circumstances, that Impact the Board's Exercise of Discretion, Including the Merits

This is the Board's opportunity to reassess a facially invalid patent that would not have issued but for the limited prior art before the Examiner, including PO's failure to disclose its own '904 Marcus prior art reference during prosecution. The merits of the Petition are particularly strong and outweigh any countervailing considerations of efficiency.

## IX. CONCLUSION

For the reasons above, *inter partes* review is requested.

Date: August 23, 2024

Respectfully submitted,

By: /s/ *James M. Glass*
James M. Glass

*Counsel for Petitioner*

**CERTIFICATION UNDER 37 C.F.R. § 42.24**

Under the provisions of 37 C.F.R. § 42.24, the undersigned hereby certifies that the word count for the foregoing Petition for *inter partes* review (excluding the table of contents, table of authorities, mandatory notices, certificate of service or word count, and appendix of exhibits or claim listing) totals 13,703 words, which is within the word limit allowed under 37 C.F.R. § 42.24(a)(i).

Date: August 23, 2024

*/s/ James Glass*
James Glass (Reg. No. 46729)

**CERTIFICATE OF SERVICE**

Pursuant to 37 C.F.R. §§ 42.6(e), 42.105(a), the undersigned hereby certifies service on the PO of a copy of this Petition and its respective exhibits at the official correspondence address for the attorneys of record for the ’704 patent as shown in USPTO PAIR via FedEx:

Louis DelJuidice
Troutman Pepper Hamilton Sanders LLP
600 Peachtree St. NE, Suite 3000
Atlanta, GA

Courtesy copies were also sent via electronic mail to Patent Owner’s counsel of record in the related district court proceeding:

Elizabeth L. DeRieux
ederieux@capshawlaw.com
Capshaw DeRieux LLP
114 E. Commerce St.
Gladewater, TX 75647

Paul J. Andre
pandrew@kramerlevin.com
Lisa Kobialka
lkobialka@kramerlevin.com
James Hannah
jhannah@kramerlevin.com
Kris Kastens
kkastens@kramerlevin.com
Kramer Levin Naftalis & Frankel LLP
333 Twin Dolphin Drive
Redwood City, CA 94065

Date: August 23, 2024

*/s/ James Glass*

James Glass (Reg. No. 46729)