UNITED STATES PATENT AND TRADEMARK OFFICE

---

BEFORE THE PATENT TRIAL AND APPEAL BOARD

---

TIKTOK INC.,
Petitioner,

v.

NTECH PROPERTIES, INC.,
Patent Owner.

---

Case IPR2024-01343
U.S. Patent No. 9,923,947

---

**DECLARATION OF MICHAEL T. GOODRICH, Ph.D. IN SUPPORT OF PATENT OWNER'S PRELIMINARY RESPONSE**

**TABLE OF CONTENTS**

I. INTRODUCTION ..... 1

II. QUALIFICATIONS ..... 2

III. APPLICABLE STANDARDS AND CONTROLLING PRINCIPLES ..... 7

A. Person of Ordinary Skill in the Art ..... 7

IV. THE ’947 PATENT ..... 8

V. ALLEGED PRIOR ART ..... 10

A. Whitehead (Ex. 1003) ..... 10

VI. THERE IS NO MOTIVATION TO MODIFY WHITEHEAD ..... 11

# I. INTRODUCTION

1. I, Dr. Michael Goodrich, have been retained as an expert witness for NTECH Properties, Inc., the Patent Owner in this response to a "inter partes review" petition. I have personal knowledge of the facts stated in this Declaration and can testify competently to those facts. The petition was initiated by TikTok Inc. and its related entities concerning U.S. Patent No. 9,923,947, which I will refer to as the '947 Patent. I have been retained as a technical expert in connection with this IPR petition. In my testimony, I will refer to NTECH Properties, Inc. as "NTECH" or the "Patent Owner." I will refer to TikTok Inc. as "TikTok" or the "Petitioner."

2. I am being compensated for my work in this matter. My compensation does not depend on the outcome of this proceeding.

3. I have been asked to provide my technical opinions relating to the '947 Patent in relation to arguments raised by TikTok in its Petition.

4. My opinion is based on a person having ordinary skill in the art (which I understand is sometimes abbreviated "POSITA") at the time of the earliest potential claimed priority date, which I understand to be roughly between 2006 and 2007. '947 Patent at 1. My opinion does not change with a later priority date.

5. In the preparation of this declaration, I have reviewed the '947 Patent, associated file history, the petition, Petitioner's exhibits, and Patent Owner's exhibits filed in this proceeding.

## II. QUALIFICATIONS

6. I summarize some of the relevant information regarding my CV (Appendix A) as follows. I received a Bachelor of Arts degree in Mathematics and Computer Science from Calvin University, in Grand Rapids, Michigan, in 1983, a Master of Science (M.S.) degree in Computer Science from Purdue University, in West Lafayette, Indiana, in 1985, and a Ph.D. in Computer Science from Purdue University in 1987.

7. I am a Distinguished Professor in the Department of Computer Science at the University of California, Irvine, where I have been a faculty member since 2001. The Distinguished Professor title is a campus-level distinction and is reserved for faculty who have achieved the highest levels of scholarship over the course of their careers. I was a professor in the Department of Computer Science at Johns Hopkins University from 1987-2001.

8. I have authored or coauthored over 350 publications, including several widely adopted books, such as Data Structures and Algorithms in Java, Data Structures and Algorithms in C++, Data Structures and Algorithms in Python, Introduction to Computer Security, and Algorithm Design and Applications. My publications include contributions to data structures and algorithms, information visualization, networking, graph algorithms, computational geometry, distributed and parallel algorithms, cloud security, information security and privacy, and

algorithm engineering. Also, several of my textbooks include entire chapters on software engineering, and several of my publications are on algorithm engineering. Altogether, my publications have, according to Google Scholar, been cited over 18,000 times. My research has been supported by grants from the Defense Advanced Research Projects Agency ("DARPA"), the National Security Agency ("NSA"), the Office of Naval Research ("ONR"), the Army Research Office ("ARO"), and the National Science Foundation ("NSF").

9. In addition, I have consulting experience in matters involving algorithms, cryptography, machine learning, digital rights management, computer security, mobile devices (including power management), networking, software, video streaming, and storage technologies.

10. I am a Fellow of the American Association for the Advancement of Science ("AAAS"), a Fellow of the Institute of Electrical and Electronics Engineers ("IEEE"), and a Fellow of the Association for Computing Machinery ("ACM"), as well as being named as a Foreign Member of the Royal Danish Academy of Sciences and Letters. I am also a recipient of a Fulbright Scholarship (for senior specialist service to University of Aarhus, Denmark). In addition, I am a recipient of the IEEE Computer Society Technical Achievement Award ("for outstanding contributions to the design of parallel and distributed algorithms for fundamental combinatorial and

geometric problems") and the Pond Award for Excellence in Undergraduate Teaching. Also, I am an ACM Distinguished Scientist.

11. I have extensive experience studying technologies involved with distributed video streaming. For instance, in my journal article J-56, my coauthors and I study methods for partitioning data into push and pull regions so as to optimize communication costs between a server and several clients. I have also published numerous research articles on topics in cloud computing and storage, distributed algorithms, and network visualization. Using the indexing scheme of my CV, examples of such publications include P-3, P-4, P-5, P-6, P-8, P-10, Ch-9, Ch-10, J-7, J-26, J-36, J-38, J-61, J-69, J-73, J-76, J-77, J-78, J-82, J-84, C-41, C-46, C-47, C-53, C-60, C-69, C-79, C-85, C-90, C-91, C-92, C-94, C-102, C-105, C-106, C-112, C-119, C-123, C-134, C-154, C-156, C-159, C-165, C-167, C-168, C-169, C-171, C-172, C-182, C-196, C-200, C-203, C-228, C-230, and C-243. Further, I have published research articles on topics in audio and video creation, encoding, and distribution, as well as authoring research videos, including publications P-9, J-65, J-66, J-68, C-38, C-54, C-74, and C-124. I also have published research articles on technologies for streaming data, including publications J-56 (mentioned above), J-58, J-72, C-98, C-121, and C-179.

12. I am a co-inventor on several U.S. patents, including U.S. Patent No. 7,257,711, "Efficient Authenticated Dictionaries with Skip Lists and Commutative

Hashing," which discloses secure distributed data authentication schemes. I am also co-inventor of U.S. Patent No. 7,299,219, "High Refresh-Rate Retrieval of Freshly Published Content using Distributed Crawling," which discloses a technology for quickly retrieving website data that can change frequently, so as to be stored in a search engine. I am also co-inventor of U.S. No. Patent 8,681,145, "Attribute Transfer Between Computer Models Including Identifying Isomorphic Regions in Polygonal Meshes," which teaches how to map one mesh-based computer model to another. In addition, I am co-inventor of U.S. Patent No. 9,152,716, "Techniques for Verifying Search Results Over a Distributed Collection," which discloses a system for searching the Internet so as to produce verifiable search results that can be produced by a search engine.

13. I have taught courses at Johns Hopkins University, Brown University, and University of California, Irvine, at both the undergraduate and graduate levels. Topics of my courses have included computer security, algorithms, data structures, information visualization, computer graphics, networking, algorithm engineering, computational geometry, and parallel processing. In addition, I have mentored twenty-six (26) PhD students over the years, who have written their PhD theses on topics in algorithms, data structures, information visualizations, networking, parallel processing, and computer security and privacy.

14. I have served as an editor on several technical journals, including Computational Geometry: Theory and Applications, Journal of Computer & System Sciences, Journal of Graph Algorithms and Applications, Int. Journal of Computational Geometry & Applications, and Information Processing Letters. I have also served on many program committees (PCs) for top conferences and workshops in Computer Science, including serving as PC chair in several instances. Examples include ACM Symposium on Computational Geometry ("SoCG"), ACM Symposium on Theory of Computing ("STOC"), Workshop/Symposium on Algorithms and Data Structures ("WADS"), Algorithm Engineering and Experimentation ("ALENEX"), which I cofounded with Dr. Catherine McGeoch in 1999), IEEE Symposium on Foundations of Computer Science ("FOCS"), ACM-SIAM Symposium on Discrete Algorithms (SODA), International Symposium on Graph Drawing ("GD"), International Colloquium on Automata, Languages, and Programming ("ICALP"), ACM Conference on Computer and Communications Security ("CCS"), European Symposium on Algorithms ("ESA"), IEEE International Parallel and Distributed Processing Symposium ("IPDPS"), ACM Symposium on Parallel Algorithms and Architectures ("SPAA"), ACM Symposium on Advances in Geographic Information Systems ("GIS"), IEEE Symposium on Security and Privacy ("S&P"), IEEE International Conference on Big Data, IEEE International Conference on Data Engineering ("ICDE"), and International

Symposium on Algorithms and Computation ("ISAAC"), and DAGS Conference on Electronic Publishing and the Information Superhighway.

## III. APPLICABLE STANDARDS AND CONTROLLING PRINCIPLES

### A. Person of Ordinary Skill in the Art

15. I understand that the "person of ordinary skill in the art" ("POSITA") is a hypothetical person who is presumed to be familiar with the relevant scientific field and its literature at the time of the invention. This hypothetical person is also a person of ordinary creativity capable of understanding the scientific principles applicable to the pertinent field.

16. I understand that the level of ordinary skill in the art may be determined by reference to certain factors, including (1) the type of problems encountered in the art, (2) prior art solutions to those problems, (3) the rapidity with which innovations are made, (4) the sophistication of the technology, and (5) the educational level of active workers in the field. I further understand that in a given case, every factor may not be present, and one or more factors may predominate.

17. In my opinion, the POSITA in 2006 to 2007 is a person would have had a bachelor's degree in computer science, computer engineering, or an equivalent, or two years of professional experience in the field of distributed computing. More education can supplement for less professional experience, and vice versa. I note that my definition of a POSITA is similar to that of Dr. Almeroth. Ex. 1002 at ¶¶ 49-50.

My opinions in this declaration would not change were I to adopt the definition of a POSITA offered by Dr. Almeroth.

18. Based on the above definition, I had such education and knowledge as of 2006 to 2007. Further, I have been teaching undergraduate and graduate computer science students for over 35 years. Thus, I believe that I am qualified to opine on the subject matter in the ’947 Patent, and what a person of ordinary skill in the art would have known as of 2006 to 2007.

19. Throughout this declaration, to avoid having to repeat myself, when I opine about one of a skilled artisan or a “POSITA” (person of ordinary skill in art) I do so with respect to the above definition, and what that person would have known or understood as of 2006 to 2007.

## IV. THE ’947 PATENT

20. U.S. Patent No. 9,923,947 (“’947 Patent”), “Method and System for Providing Media Programming,” to Dwight Marcus, was filed December 14, 2015, and issued March 20, 2018.

21. The ’947 Patent describes ways to tailor media content to specific users. Specifically, as depicted in figure 7 below, the aggregator provides a list of feeds to a user (step 705), the aggregator receives a feed selection from a user (step 710), the publisher receives the user feed selection and user information from the aggregator (step 715), and the publisher provides a customized media programming in which

the selection and order of the media elements are concatenated with a feed using in part the user information (step 720). '947 Patent at 13:21-30, Claim 1.

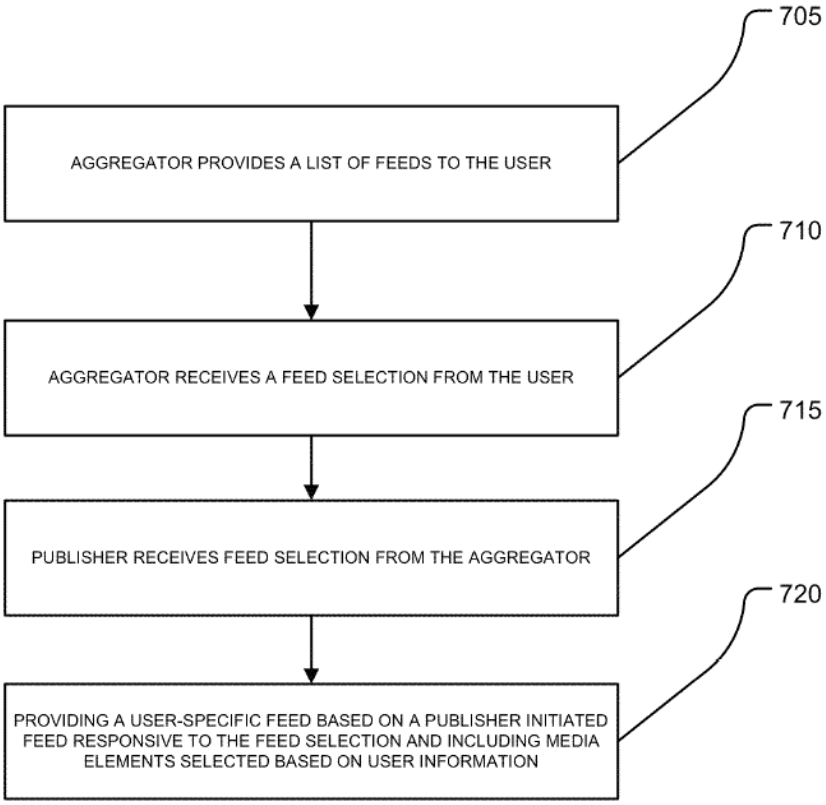


***Fig. 7***

*Id.* at Fig. 7.

22. The provisioning of individualized customized media programming is further exemplified in Figure 1, which depicts the publisher providing customized media programming to different users. *Id.* at 2:60-3:1; Fig. 1 (depicting the aggregator providing a presentation element having a list of feeds to user 1 and user 2, and the publisher providing user-specific media programming to each user upon

publisher receiving feed selection and user information from aggregator); *see also id.* at 3:1-15 (disclosing that the publisher selects and concatenates media elements based on user information), 5:35-61(disclosing that the publisher server's processor executes software to provide media programming). This results in a more unique and tailored experience for the user. For instance, the publisher generates customized media programming that includes dynamically varying sequence of media elements; with the selection and order specific for each user based on their user information. *Id.* 12:47-59. Notably, during prosecution, the Applicant stressed that the claimed "publisher" customizes the media programming and provides dynamic updates to "customize additional elements in the media programming" when additional user information is received. Ex. 1019 at 139.

## V. ALLEGED PRIOR ART

### A. Whitehead (Ex. 1003)

23. U.S. Patent No. 8,555,318 ("Whitehead"), "Customized Media on Demand," to Steven D. Whitehead, was filed on December 6, 2006 and issued October 8, 2013.

24. Whitehead discloses a system delivering customized media to a customer premise 101 from various backend servers, such as mixing server 130. Whitehead at Fig. 1 (excerpted below), 2:1-30.

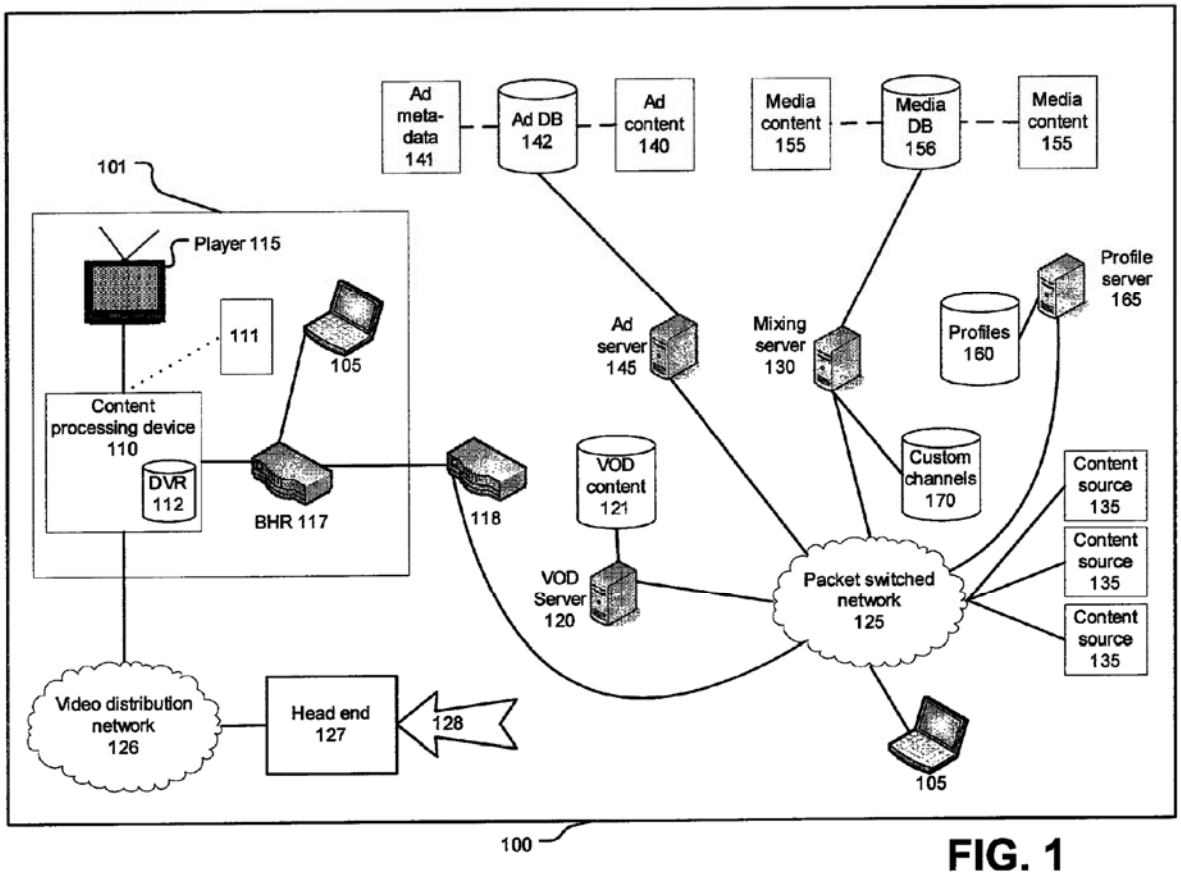


FIG. 1

Whitehead at Fig. 1.

## VI. THERE IS NO MOTIVATION TO MODIFY WHITEHEAD

25. I have reviewed the Whitehead reference in connection with TikTok's Petition. TikTok proposes to modify Whitehead's profile server 165 and merge it with the content information device 110 to form the aggregator in Independent Claim 1. Pet. at 27-28; Ex. 1002 at ¶¶89-90. However, this analysis is based purely on apparent hindsight because it is not how Whitehead is design to operate. The proposed changes substantially and fundamentally the operation of Whitehead.

26. Whitehead's design and operation *requires* that the profile server 165 be separate from content information device 110. Expressly and inherently, the

operation of Whitehead requires that the user select from a menu of custom media channels 170. *See, e.g.*, Whitehead at 2:1-39, 11:40-43, 15:52-16:21, Figs. 4 (at step 405), 5 (at step 510). As described in Whitehead and argued by Petitioner, Whitehead's customer media channels 170 are generated through the use of profile server 165. *See, e.g.*, *id.* at 4:31-33 ("To create and/or store custom media channels 170, mixing server 130 also accesses media metadata 150 and custom channel profiles 160."); Pet. at 15-16, 19, 22.

27. A POSITA would then understand that for a user to be able to select a custom media channel from a menu, then some form custom media channel *must* exist *prior* to the content information device 110 receiving the menu. A POSITA would understand that the only possible design choice available would be to keep the profile server 165 in the backend as part of the system architecture in order to prevent the waiting of sending profile data from a content information device 110. It is not a practical solution for a set-top box (i.e., the content information device) to store and send user profile information that includes information such as prior user's requests to the mixing server 130 in the backend, when as a matter of system architecture design it would be a better solution to put a profile server 165 in the backend to directly communicate with the mixing server 130. For example, Whitehead teaches that the content information device 110 communicates through a broadband home router 117, which many only be a cable modem, connected to a

gateway router 118 that is, in turn, connected to the packet switched network 125, whereas the backend servers communicate using the packet switched network 125, which could be the Internet. Whitehead at Fig. 1, 2:60-63, 3:14-39, 3:48-51. In other words, the only design choice available in Whitehead is to having the profile server 165 in the backend with the mixing server 130 in order to generate the menu as quickly as possible. Thus, Whitehead's profile server 160 cannot be merged with content information device 110 because the operation of Whitehead requires that the profile server 160 exists separately in order to generate the custom media channels 170 *before* the content information device 110 can select a channel from media player 115.

28. Dr. Almeroth's declaration fails to properly analyze the proposed modification of Whitehead in the context of Whitehead, instead relying only on the '947 Patent claims as a guide to create a justification for his changes. Dr. Almeroth's only proposed motivation to move the profile server to the content processing device is that would simply "eliminate the need for a separate profile server 165" which would "simplify[] processing and communications." Ex. 1002 at ¶ 89. That is simply false.

29. Dr. Almeroth fails to take into consideration that Whitehead requires a separated frontend and backend architecture. Instead, Dr. Almeroth cites to Whitehead to state various components in Whitehead's system can be combined or

shifted, including "maintaining profiles 160 on content processing device 110" to "eliminate the need for a separate profile server 165." Ex. 1002 at ¶ 89. Dr. Almeroth fails to explain that in each of the citations to combining components, it relates to alternative options for a specific component, involve combining specific components that provide "similar" functionality, or unrelated citations. Whitehead at 2:52-59 (describing that media player could be TV, HDTV, or Window Media Player), 4:10-26 (explaining that the mixing server 130 can be combined with VOD server 120 because they have similar functionality), 6:35-46 (discussing various ways of accessing profiles 160 located on profile server 165)[1], 15:16-22 (noting that the playback application may be executed at client 105, content processing device 110, or mixing server 130), 19:44-63 (explaining there are multiple options to create an overlay menu). Notably, none of the citations involve moving profiles 160 to

---

[1] This citation does not relate to combining components, but rather notes that the profiles 160 stored on profile server 165 may be accessed and modified by computer 105, content processing device 110, or the provider of profile server 165. A POSITA would understand that this citation shows that Whitehead would never contemplate moving the profiles 160 to the content processing device 110 because it specifically identifies that the "provider" of profile server 165 has access. The provider here would be some cable company, such as Verizon (the owner of the Whitehead patent).

content processing device 110. Moreover, none of the citations involve mixing a frontend component with a backend component. The reason is simple, in a broadcast system, such as in Whitehead, there is going to be a distributed architecture that requires both a frontend and a backend.

30. Whitehead teaches that "custom channel profile 160 is generally stored in a relational database or the like associated with or included in profile server 165," that "[a]ccordingly, a custom channel profile 160 may be one or more records in one or more tables in a relational database, such records generally identified by an identifier associated with a user," and that "custom channel profiles 160 are generally accessible by mixing server 130." *Id.* at 11:20-28. A POSITA would understand that Dr. Almeroth's proposed modification to Whitehead would break all of these functionalities, and Dr. Almeroth does not explain how his proposed locally oriented user profile modification would function. For example, a POSITA would recognize that storing profiles on the different content processing devices 110 (which are separate and not a part of the packet switched network 125) would imply that user profiles would no longer be generally accessible by mixing server 130. Further, Whitehead teaches that this databases triggers events, analyses, and messages that a POSITA would understand to no longer function if the profile server 165 no longer maintained user profiles 160. *See, e.g.*, *id.* at 12:8-37. Accordingly, in addition to there being no teaching in Whitehead to motivate removing the

backend profile database in Whitehead and replacing it with locally stored profiles on content processing devices 110, a POSITA would have no likelihood of success in contemplating such a modification, since such a modification would break functioning database operations in Whitehead and not provide equivalent or improved replacements.

31. Because Dr. Almeroth does not take into consideration the architecture of Whitehead, he fails to consider the appropriate design choices. The frontend unit (such as the set-top box in Whitehead) are designed to be replaceable, thus storing the user profile there as Dr. Almeroth proposes, with its user search history and other information, would create a problem every time the frontend unit is replaced. Dr. Almeroth does not address this problem because he is using hindsight to justify his design changes. *See, e.g.*, Ex. 1002 at ¶ 90 (discussing reasonable expectation that data can be sent on TCP/IP but failing to address the system architecture of Whitehead). The only practical solution to this new problem would be to store the user profile in the backend, which undermines the sole reason Dr. Almeroth provides, eliminating the need for a separate profile server.

32. A further reason for keeping the profiles stored in the backend is for security reasons. A POSITA would understand, for example, that storing sensitive or valuable information in a backend server is generally more secure than storing it on multiple frontend devices. For example, Whitehead teaches that user must login

to a profile server 165 and have their identity verified in order in order to manipulate one or more custom media profiles 160. Whitehead at 10:6-10. Whitehead also teaches that a user may have to provide a username and password that was previously provided to the user and **stored in the profile serve 165**. Whitehead at 10:17-32. A POSITA would understand that Whitehead is teaching that custom channel profiles 160 are sensitive and valuable, e.g., because they are used for revenue purposes. Whitehead at 12:38-46. In contrast to the security taught in Whitehead for its backend systems, Whitehead teaches that user logins to the frontend system may be **skipped,** but that even in such a scenario a request to access backend data will be terminated if the system fails to authenticate and authorize the user. Whitehead at 15:23-51.

33. A POSITA would understand that yet another reason for keeping profiles stored in the backed is for revenue reasons. For example, Whitehead teaches gathering demographic data about users based on their profiles. Whitehead at 12:50-55. Indeed, Whitehead discloses that it is desirable to maximize revenue for the provider system 100 and/or the operator of mixing server 130, which a POSITA would understand to be teaching that sensitive and valuable profile data should be stored in the backend of the system, not the frontend. Whitehead at 14:5-12. A POSITA would know, for instance, that demographic and popularity data can be used to target advertisements for maximum impact. Whitehead at 4:27-35, 5:4-8,

12:38-55. For example, Whitehead teaches that profiles 160 and other data in the backend can be updated based on collected popularity ratings, which is facilitated by storing profile data in the backend rather than in the frontend. Whitehead at 19:16-38. A POSITA would further understand that user ratings are intended for backend storage and processing rather than frontend storage in that they are taught in Whitehead as providing **feedback** to be used to update user profiles 160. Whitehead at 18:63-19:15. That is, a POSITA would understand that storing profile data and other metadata regarding profiles and demographics in backend servers facilitates collecting feedback, such as popularity ratings, which can be aggregated to determine which are the most popular and highly rated media files. In contrast, a POSITA would recognize that it would be infeasible and/or computationally challenging to determine the popularity of media files when user ratings are stored at many geographically dispersed frontend computers.

34. Dr. Almeroth's reliance on geographic location for the user data is also based on apparent hindsight, as the described profile server 165 provides a graphical interface from which a user can provide information. Ex. 1002 at ¶ 88; Whitehead at 7:3-5. Nowhere in Whitehead does it propose sending geographic location information for a user's device(s) from the content information device 110. Instead, Whitehead teaches only that geographic information may associated with certain **content** or be of general interest to a user, such as for the "Detroit Tigers."

Whitehead does not disclose gathering, transmitting, or storing geographic information associated with user devices. Whitehead at 4:64-5:3, 5:9-23, 7:3-18, 13:65-67. For example, a POSITA would understand that a user's general interest in the Detroit Tigers does not provide geographic information for a user's device. Indeed, a POSITA would know that it is not uncommon for folks (such as myself) who grew up in Michigan to continue to be Detroit Tigers fans long after they have moved out of the state.

35. Dr. Almeroth states, that the content processing device 110 could have "improv[ed] convenience and accuracy" by "automatically include[ing] the user's geographic location . . . in the request." Almeroth Decl. at ¶ 88. Dr. Almeroth does not provide any evidence to support this conclusion, however, which I disagree with. Indeed, contrary to this unsupported conclusion, a POSITA would understand that IP addresses are poor proxies for geographic locations. For example, a study[2] from 2005 that has been cited over 150 times found that IP address prefixes had a diversity of approximately 500 miles at the 50% confidence level and over 1,000 miles at the

---

[2] Michael J. Freedman, Mythili Vutukuru, Nick Feamster, and Hari Balakrishnan. "Geographic Locality of IP Prefixes." In Proceedings of the 5th ACM SIGCOMM conference on Internet Measurement (2005), pp. 13-13. Ex. 2004 ("Freedman").

90% confidence level. Ex. 2004 (Freedman) at 5, Fig. 2. Also, a study[3] from 2011 that has been cited approximately 500 times concludes that even in that timeframe existing IP-address-to-geographic-location databases were difficult to manage and that their accuracy was "more than questionable." Ex. 2005 (Poese) at 1. Similar to the findings of the 2008, the 2011 study found that most of the blocks of such databases incorrectly geolocate IP prefixes, with errors being systemically in the order of a few kilometers. *Id.* at 2. Moreover, Whitehead teaches that its profile server 165 has a graphical user interface (GUI) through which a user may provide information for a profile, and that such information "generally includes a username and may include **other identifying information** along with information concerning topics of interest to the user," and that the user can input "geographic locations of interest to the user." Whitehead at 7:3-18 [emphasis added]. A POSITA would understand that "other identifying information" here could include a billing address and/or a shipping address for a set-top-box 110, e.g., since Whitehead teaches the content processing device 110 is contained in a **premises** 101. Whitehead at Fig. 1, 2:7-22, 3:2-4, 3:29-31. Thus, a POSITA would recognize that there is no motivation

---

[3] Ingmar Poese, Steve Uhlig, Mohamed Ali Kaafar, Benoit Donnet, Bamba Gueye, "IP Geolocation Databases: Unreliable?", *ACM SIGCOMM Computer Communications Review*, Vol. 41, No. 2, April 2011. Ex. 2005 ("Poese").

or expectation of success in resorting to an unreliable and undisclosed IP-address-to-geographic-location database to determine the location of a user, e.g., since such information could already be included in profile data. Accordingly, I conclude that when Whitehead mentions that a profile "might contain demographic information such as a user's location, services subscribed to, etc.," a POSITA would understand this to be referring to information that a user could enter using the GUI of the profile server 165 and that a user may have multiple profiles, including data contained in a profile that is external to a given user profile 160. Whitehead at 7:3-18, 11:9-16, 12:50-55. Further, Whitehead teaches that its broadband home router (BHR) 117 obtains its IP address from the gateway router 118 and the BHR 117 may give an IP address to the content processing device 110 using Dynamic Host Configuration Protocol (DHCP); hence, a POSITA would understand that the content processing device 110 would generally not have a fixed IP address that could be used to determine geographic locations. That is, the content processing device 110 could have multiple IP addresses, depending on time and the DHCP method used by BHR 117. In addition, as further evidence that IP addresses are poor proxies for geographic locations, a POSITA would understand that Virtual Private Network

(VPN) technology[4] could be used to mask the location of a node communicating through the Internet, including masking a country of origin. A POSITA would understand that nothing taught in Whitehead precludes the use of VPN technology within its system, e.g., since it merely requires that the BHR 117 be able to communicate with a gateway router 118 that can send information to and receive information from the packet switched network 125, which VPN technologies would allow. Whitehead at 2:60-63. Thus, I conclude that Dr. Almeroth's arguments here are unsupported, contrary to the understandings of a POSITA, and appear to be motivated by hindsight using the '947 Patent as a guide rather than being motivated by the teachings of Whitehead and the knowledge of a POSITA.

---

[4] Gleeson et al., RFC 2764, "A Framework for IP Based Virtual Private Networks," https://www.rfc-editor.org/rfc/rfc2764 (Ex. 2009).

I declare that all statements made herein on my own knowledge are true and that all statements made on information and belief are believed to be true, and further, that these statements were made with the knowledge that willful false statements and the like so made are punishable by fine or imprisonment, or both, under Section 1001 of Title 18 of the United States Code.

Executed on December 15, 2024, in Irvine, California.

_____
Michael T. Goodrich, Ph.D.

# APPENDIX A

# CURRICULUM VITAE
## Michael T. Goodrich

Dept. of Computer Science
Bren School of Info. & Computer Sciences
University of California, Irvine
Irvine, CA 92697-3435

E-mail: mike.t.goodrich (at) gmail.com
http://www.ics.uci.edu/~goodrich/

**CITIZENSHIP:** U.S.A.

**EDUCATION**

| | | |
|---|---|---|
| Ph.D. | 1987 | *Efficient Parallel Techniques for Computational Geometry*<br>Computer Science, Purdue Univ. (M.J. Atallah, advisor) |
| M.S. | 1985 | Computer Science, Purdue Univ. |
| B.A. | 1983 | Mathematics and Computer Science, Calvin Univ. |

**PROFESSIONAL EXPERIENCE**

| | |
|---|---|
| July '19 to present | Distinguished Professor, Dept. of Computer Science<br>Univ. of California, Irvine |
| March '10 to present | Technical Director, Center for Algorithms and Theory of Computation<br>Univ. of California, Irvine |
| April '07 to June '19 | Chancellor's Professor, Dept. of Computer Science<br>Univ. of California, Irvine |
| July '12 to June '13 | Chair, Dept. of Computer Science<br>Univ. of California, Irvine |
| October '06 to June '12 | Assoc. Dean for Faculty Dev., Bren School of Info. and Comp. Sci.<br>Univ. of California, Irvine |
| July '01 to March '07 | Professor, Dept. of Computer Science<br>Univ. of California, Irvine |
| Fall '00 | Visiting Professor of Computer Science<br>Brown Univ. |
| July '96 to June '02 | Professor of Computer Science (on leave, from July '01)<br>Johns Hopkins Univ. |
| July '92 to June '96 | Associate Professor of Computer Science<br>Johns Hopkins Univ. |
| Spring '94 | Visiting Associate Professor of Computer Science<br>Univ. of Illinois, Urbana-Champaign |
| July '87 to June '92 | Assistant Professor of Computer Science<br>Johns Hopkins Univ. |
| Aug. '83 to June '87 | Teaching Assistant, Research Assistant<br>Purdue Univ. |
| Summer '83 | Summer intern<br>Argonne National Laboratory |

**RESEARCH INTERESTS**

Algorithm and data structure design
Networking and parallel and distributed computing
Computer security and information assurance and privacy
Machine learning and computer vision
Databases and high-performance data management
Information visualization and graph drawing
Computational geometry and computer graphics



**Patent Owner, NTECH Properties, Inc. - Ex. 2001, p. 27**

## PRIZES, HONORS, AND AWARDS

- *Compere Loveless Fellowship in Computer Sciences*, Purdue Univ., 1985
- *Research Initiation Award*, National Science Foundation, 1988
- *Oraculum Award for Excellence in Teaching*, Johns Hopkins, 1993, 1994, 1995
- *ACM Recognition of Service Award*, 1996
- *Robert B. Pond, Sr. Award for Excellence in Undergraduate Teaching*, Johns Hopkins, 1998
- *Elected Senior Member*, the Institute of Electrical and Electronics Engineers (IEEE), 1999
- *Spirit of Technology Transition Award*, DARPA Dynamic Coalitions Program, 2002
- *Brown Univ. Award for Technological Innovation* (with R. Tamassia, N. Triandopoulos, D. Yao, and D. Ellis), 2006
- *ACM Distinguished Scientist*, 2006
- *2006 IEEE Computer Society Technical Achievement Award*, "for outstanding contributions to the design of parallel and distributed algorithms for fundamental combinatorial and geometric problems"
- *Fulbright Scholar*, 2007, for senior specialist service to University of Aarhus, Denmark
- *Fellow of the San Diego Supercomputer Center*, 2007
- *Fellow of the American Association for the Advancement of Science (AAAS)*, "for distinguished contributions to parallel and distributed algorithms for combinatorial and geometric problems, and excellence in teaching, academic and professional service, and textbook writing," 2007
- *Named as Chancellor's Professor*, for "demonstrated unusual academic merit and whose continued promise for scholarly achievement is unusually high," Univ. of California, Irvine, 2007
- *Fellow of the Institute of Electrical and Electronics Engineers (IEEE)*, "for contributions to parallel and distributed algorithms for combinatorial and geometric problems," 2009
- *Fellow of the ACM*, "for contributions to data structures and algorithms for combinatorial and geometric problems," 2009
- *ICS Dean's Award for Research*, "for contributions in the area of parallel and distributed algorithms," 2014
- *Chancellor's Award for Excellence in Fostering Undergraduate Research*, Univ. of California, Irvine, 2016
- *Faculty Mentor of the Month*, Undergraduate Research Opportunities Program (UROP), Univ. of California, Irvine, April 2016
- *Elected as a foreign member*, Royal Danish Academy of Sciences and Letters, April 2018
- *Named as Distinguished Professor*, for achieving "the highest levels of scholarship" over the course of a career and having "earned national and international level distinctions and honors of the highest level," Univ. of California, Irvine, 2019
- *Recipient of The Alejandro López-Ortiz Best Paper Award*, for "Zip-zip Trees: Making Zip Trees More Balanced, Biased, Compact, or Persistent," 18th Algorithms and Data Structures Symposium, 2023.

## PUBLICATIONS

### Google Scholar Citation Statistics:

- Total citations: over 18,000
- H-index (top H publications with at least H citations): 73



**Patent Owner, NTECH Properties, Inc. - Ex. 2001, p. 28**

**Patents and Patent Applications:**

P-1. M.T. Goodrich and R. Tamassia, "An Efficient Dynamic Distributed Cryptographic Accumulator," International Patent Application Pub. No. WO 02/39212, May 16, 2002.

P-2. G. Ateniese, B. de Medeiros, and M.T. Goodrich, "Intermediated Delivery Scheme for Asymmetric Fair Exchange of Electronic Items," U.S. Patent Application Pub. No. US 2004/0073790, April 15, 2004.

P-3. M.T. Goodrich and R. Tamassia, "Efficient Authenticated Dictionaries with Skip Lists and Commutative Hashing," U.S. Patent No. 7,257,711, August 14, 2007.

P-4. J.W. Green, J.L. Schultz, Y. Amir, and M.T. Goodrich, "High Refresh-Rate Retrieval of Freshly Published Content using Distributed Crawling," U.S. Patent No. 7,299,219, November 20, 2007.

P-5. R. Tamassia, M.T. Goodrich, and N. Triandopoulos, "Super-efficient Verification of Dynamic Outsourced Databases," International Patent Application Pub. No. WO 2008/014002, January 31, 2008.

P-6. M.T. Goodrich, R. Tamassia, and N. Triandopoulos, "Load-balanced Distributred Authentication Structures," International Patent Application Pub. No. WO 2008/014004, January 31, 2008.

P-7. M.T. Goodrich, D. Yao, and R. Tamassia, "Notarized Federated Identity Management," International Patent Application Pub. No. WO 2008/020991, February 21, 2008.

P-8. R. Tamassia, M.T. Goodrich, N. Triandopoulos, and C. Papamanthou, "Authentication for Operations over an Outsourced File System Stored by an Untrusted Unit," International Patent Application Pub. No. WO 2008/147400, December 4, 2008.

P-9. R. Tamstorf, M.T. Goodrich, D. Eppstein, "Attribute Transfer Between Computer Models Including Identifying Isomorphic Regions in Polygonal Meshes," U.S. Patent No. 8,681,145, March 25, 2014.

P-10. N. Triandopoulos, M.T. Goodrich, D. Nguyen, O. Ohrimenko, C. Papamanthou, R. Tamassia, C.V. Lopes, "Techniques for Verifying Search Results Over a Distributed Collection," U.S. Patent No. 9,152,716, October 6, 2015.

**Books and Monographs:**

B-1. M.T. Goodrich and R. Tamassia, *Data Structures and Algorithms in Java*, John Wiley and Sons, Inc., 1998.

B-2. M.T. Goodrich and C.C. McGeoch, eds., *Algorithm Engineering and Experimentation*, Lecture Notes in Computer Science (LNCS), Vol. 1619, Springer-Verlag, 1999.

B-3. M.T. Goodrich and R. Tamassia, *Data Structures and Algorithms in Java, Second Edition*, John Wiley and Sons, Inc., 2001.

B-4. M.T. Goodrich and R. Tamassia, *Algorithm Design: Foundations, Analysis, and Internet Examples*, John Wiley and Sons, Inc., 2002.

B-5. M.T. Goodrich and S.G. Kobourov, eds., *10th Int. Symp. on Graph Drawing* (GD), Lecture Notes in Computer Science, Vol. 2528, Springer-Verlag, 2002.

B-6. M.T. Goodrich, R. Tamassia, and D. Mount, *Data Structures and Algorithms in C++*, John Wiley and Sons, Inc., 2004.

B-7. M.T. Goodrich and R. Tamassia, *Data Structures and Algorithms in Java, Third Edition*, John Wiley and Sons, Inc., 2004.

B-8. M.T. Goodrich and R. Tamassia, *Data Structures and Algorithms in Java, Fourth Edition*, John Wiley and Sons, Inc., 2006.

B-9. M.T. Goodrich and R. Tamassia, *Data Structures and Algorithms in Java, Fifth Edition*, John Wiley and Sons, Inc., 2011.

B-10. M.T. Goodrich and R. Tamassia, *Introduction to Computer Security*, Addison-Wesley, 2011.

B-11. M.T. Goodrich, R. Tamassia, and D. Mount, *Data Structures and Algorithms in C++, Second Edition*, John Wiley and Sons, Inc., 2011.

B-12. M.T. Goodrich, R. Tamassia, and M. Goldwasser, *Data Structures and Algorithms in Python*, John Wiley and Sons, Inc., 2013.

B-13. M.T. Goodrich, R. Tamassia, and M. Goldwasser, *Data Structures and Algorithms in Java, Sixth Edition*, John Wiley and Sons, Inc., 2014.

B-14. M.T. Goodrich and R. Tamassia, *Algorithm Design and Applications*, Wiley, 2015.

B-15. M.T. Goodrich and R. Tamassia, *Algorithm Design and Applications*, interactive e-book, `www.zybooks.com/catalog/goodrich-algorithm-design-and-applications/`, zyBooks (a division of Wiley), 2022.

**Book Chapters:**

Ch-1. M.J. Atallah and M.T. Goodrich, "Deterministic Parallel Computational Geometry," in *Synthesis of Parallel Algorithms*, J.H. Reif, ed., Morgan Kaufmann, 497–536, 1993.

Ch-2. M.T. Goodrich, "The Grand Challenges of Geometric Computing," in *Developing a Computer Science Agenda for High-Performance Computing*, U. Vishkin, ed., ACM Press, 64–68, 1994.

Ch-3. M.T. Goodrich, "Parallel Algorithms in Geometry," *CRC Handbook of Discrete and Computational Geometry*, J.E. Goodman and J. O'Rourke, eds., CRC Press, Inc., 669–682, 1997.

Ch-4. M.T. Goodrich and K. Ramaiyer, "Geometric Data Structures," *Handbook of Computational Geometry*, J.-R. Sack and J. Urrutia, eds., Elsevier Science Publishing, 463–489, 2000.

Ch-5. M.T. Goodrich and R. Tamassia, "Simplified Analyses of Randomized Algorithms for Searching, Sorting, and Selection," *Handbook of Randomized Computing*, S. Rajasekaran, P.M. Pardalos, J.H. Reif, and J.D.P. Rolim, eds., Kluwer Academic Publishers, Vol. 1, 23–34, 2001.

Ch-6. M.T. Goodrich, "Parallel Algorithms in Geometry," *Handbook of Discrete and Computational Geometry, Second Edition*, J.E. Goodman and J. O'Rourke, eds., Chapman & Hall/CRC Press, Inc., 953–967, 2004. (Revised version of Ch-3.)

Ch-7. C. Duncan and M.T. Goodrich, "Approximate Geometric Query Structures," *Handbook of Data Structures and Applications*, Chapman & Hall/CRC Press, Inc., 26-1–26-17, 2005.

Ch-8. M.T. Goodrich, R. Tamassia, and L. Vismara, "Data Structures in JDSL," *Handbook of Data Structures and Applications*, Chapman & Hall/CRC Press, Inc., 43-1–43-22, 2005.

Ch-9. Y. Cho, L. Bao and M.T. Goodrich, "Secure Location-Based Access Control in WLAN Systems," *From Problem Toward Solution: Wireless and Sensor Networks Security*, Zhen Jiang and Yi Pan, eds., Nova Science Publishers, Inc., Chapter 17, 2007.

Ch-10. M.T. Goodrich and M.J. Nelson, "Distributed Peer-to-Peer Data Structures," *Handbook of Parallel Computing: Models, Algorithms and Applications*, R. Rajasekaran and J. Reif, eds., CRC Press, 17-1–17-17, 2008.

Ch-11. C.A. Duncan and M.T. Goodrich, "Planar Orthogonal and Polyline Drawing Algorithms," *Handbook of Graph Drawing and Visualization*, CRC Press, Inc., 223–246, 2013.

Ch-12. M.T. Goodrich, R. Tamassia, and L. Vismara, "Data Structures in JDSL," *Handbook of Data Structures and Applications*, 2nd edition, Chapman and Hall/CRC, Taylor & Francis, Inc., 43-1–43-22, 2018.

**Journal Papers:**

J-1. M.J. Atallah and M.T. Goodrich, "Efficient Parallel Solutions to Some Geometric Problems," *Journal of Parallel and Distributed Computing*, **3**(4), 1986, 492–507.

J-2. M.T. Goodrich, "Finding the Convex Hull of a Sorted Point Set in Parallel," *Information Processing Letters*, **26**, 1987, 173–179.

J-3. H. ElGindy and M.T. Goodrich, "Parallel Algorithms for Shortest Path Problems in Polygons," *The Visual Computer*, **3**(6), 1988, 371–378.

J-4. M.J. Atallah and M.T. Goodrich, "Parallel Algorithms For Some Functions of Two Convex Polygons," *Algorithmica*, **3**, 1988, 535–548.

J-5. M.J. Atallah, R. Cole, and M.T. Goodrich, "Cascading Divide-and-Conquer: A Technique for Designing Parallel Algorithms," *SIAM Journal on Computing*, **18**(3), 1989, 499–532.

J-6. M.T. Goodrich, "Triangulating a Polygon in Parallel," *Journal of Algorithms*, **10**, 1989, 327–351.

J-7. M.T. Goodrich and M.J. Atallah, "On Performing Robust Order Statistics in Tree-Structured Dictionary Machines," *Journal of Parallel and Distributed Computing*, **9**(1), 1990, 69–76.

J-8. M.T. Goodrich and J.S. Snoeyink, "Stabbing Parallel Segments with a Convex Polygon," *Computer Vision, Graphics and Image Processing*, **49**, 1990, 152–170.

J-9. J. Johnstone and M.T. Goodrich, "A Localized Method for Intersecting Plane Algebraic Curve Segments," *The Visual Computer*, **7**(2–3), 1991, 60–71.

J-10. M.T. Goodrich, "Intersecting Line Segments in Parallel with an Output-Sensitive Number of Processors," *SIAM Journal on Computing*, **20**(4), 1991, 737–755.

J-11. R. Cole and M.T. Goodrich, "Optimal Parallel Algorithms for Point-Set and Polygon Problems," *Algorithmica*, **7**, 1992, 3–23.

J-12. M.T. Goodrich, "A Polygonal Approach to Hidden-Line and Hidden-Surface Elimination," *Computer Vision, Graphics, and Image Processing: Graphical Models and Image Processing*, **54**(1), 1992, 1–12.

J-13. M.T. Goodrich, S. Shauck, and S. Guha, "Parallel Methods for Visibility and Shortest Path Problems in Simple Polygons," *Algorithmica*, **8**, 1992, 461–486, with addendum in *Algorithmica*, **9**, 1993, 515–516.

J-14. M.T. Goodrich, C. Ó'Dúnlaing, and C. Yap "Constructing the Voronoi Diagram of a Set of Line Segments in Parallel," *Algorithmica*, **9**, 1993, 128–141.

J-15. M.T. Goodrich, "Constructing the Convex Hull of a Partially Sorted Set of Points," *Computational Geometry: Theory and Applications*, **2**, 1993, 267–278.

J-16. M.T. Goodrich, "Constructing Arrangements Optimally in Parallel," *Discrete and Computational Geometry*, **9**, 1993, 371–385.

J-17. M.T. Goodrich, M.J. Atallah, and M. Overmars, "Output-Sensitive Methods for Rectilinear Hidden Surface Removal," *Information and Computation*, **107**(1), 1993, 1–24.

J-18. M.J. Atallah, P. Callahan, and M.T. Goodrich, "P-Complete Geometric Problems," *Int. Journal of Computational Geometry & Applications*, **3**(4), 1993, 443–462.

J-19. M.J. Atallah, M.T. Goodrich, and S.R. Kosaraju, "Parallel Algorithms for Evaluating Sequences of Set-Manipulation Operations," *Journal of the ACM*, **41**(6), 1994, 1049–1088.

J-20. M.T. Goodrich, "Efficient Piecewise-Linear Function Approximation Using the Uniform Metric," *Discrete and Computational Geometry*, **14**, 1995, 445–462.

J-21. H. Brönnimann and M.T. Goodrich, "Almost Optimal Set Covers in Finite VC-Dimension," *Discrete and Computational Geometry*, **14**, 1995, 463–479.

J-22. M.T. Goodrich, "Planar Separators and Parallel Polygon Triangulation," *J. Computer and*



**Patent Owner, NTECH Properties, Inc. - Ex. 2001, p. 31**

*System Sciences*, **51**(3), 1995, 374–389.

J-23. M.T. Goodrich, M. Ghouse, and J. Bright, "Sweep Methods for Parallel Computational Geometry," *Algorithmica*, **15**(2), 1996, 126–153.

J-24. M.T. Goodrich and S.R. Kosaraju, "Sorting on a Parallel Pointer Machine with Applications to Set Expression Evaluation," *Journal of the ACM*, **43**(2), 1996, 331–361.

J-25. A. Garg, M.T. Goodrich, and R. Tamassia, "Planar Upward Tree Drawings with Optimal Area," *International Journal of Computational Geometry & Applications*, **6**(3), 1996, 333–356.

J-26. M.H. Nodine, M.T. Goodrich, and J.S. Vitter, "Blocking for External Graph Searching," *Algorithmica*, **16**(2), 1996, 181–214.

J-27. R. Cole, M.T. Goodrich, C. Ó Dúnlaing, "A Nearly Optimal Deterministic Parallel Voronoi Diagram Algorithm," *Algorithmica*, **16**, 1996, 569–617.

J-28. G. Das and M.T. Goodrich, "On the Complexity of Optimization Problems for 3-Dimensional Convex Polyhedra and Decision Trees," *Computational Geometry: Theory and Applications*, **8**, 1997, 123–137.

J-29. M.T. Goodrich and R. Tamassia, "Dynamic Ray Shooting and Shortest Paths in Planar Subdivisions via Balanced Geodesic Triangulations," *J. Algorithms*, **23**, 1997, 51–73.

J-30. M. Ghouse and M.T. Goodrich, "Fast Randomized Parallel Methods for Planar Convex Hull Construction," *Computational Geometry: Theory and Applications*, **7**, 1997, 219–235.

J-31. L.P. Chew, M.T. Goodrich, D.P. Huttenlocher, K. Kedem, J.M. Kleinberg, and D. Kravets, "Geometric Pattern Matching under Euclidean Motion," *Computational Geometry: Theory and Applications*, **7**, 1997, 113-124.

J-32. M.T. Goodrich and E.A. Ramos, "Bounded-Independence Derandomization of Geometric Partitioning with Applications to Parallel Fixed-Dimensional Linear Programming," *Discrete & Computational Geometry*, **18**(4), 1997, 397–420.

J-33. M.T. Goodrich, "An Improved Ray Shooting Method for Constructive Solid Geometry Models via Tree Contraction," *International Journal of Computational Geometry & Applications*, **8**(1), 1998, 1–23.

J-34. G. Barequet, A.J. Briggs, M.T. Dickerson, and M.T. Goodrich, "Offset-Polygon Annulus Placement Problems," *Computational Geometry: Theory and Applications*, **11**(3–4), 1998–99, 125–141.

J-35. M.T. Goodrich and R. Tamassia, "Dynamic Trees and Dynamic Point Location," *SIAM J. Comput.*, **28**(2), 1999, 612–636.

J-36. G. Barequet, S.S. Bridgeman, C.A. Duncan, M.T. Goodrich, and R. Tamassia, "GeomNet: Geometric Computing Over the Internet," *IEEE Internet Computing*, **3**(2), 1999, 21–29.

J-37. M.T. Goodrich, J.S.B. Mitchell, and M.W. Orletsky, "Approximate Geometric Pattern Matching Under Rigid Motion," *IEEE Trans. on Pattern Analysis and Machine Intelligence*, **21**(4), 1999, 371–379.

J-38. M.T. Goodrich, "Communication-Efficient Parallel Sorting," *SIAM Journal on Computing*, **29**(2), 1999, 416–432.

J-39. C.A. Duncan, M.T. Goodrich, S.G. Kobourov, "Balanced Aspect Ratio Trees and Their Use for Drawing Very Large Graphs," *Journal of Graph Algorithms and Applications*, **4**(3), 2000, 19–46. Also available at www.cs.brown.edu/publications/jgaa/.

J-40. M.T. Goodrich and C.G. Wagner, "A Framework for Drawing Planar Graphs with Curves and Polylines," *Journal of Algorithms*, **37**, 2000, 399–421.

J-41. C.A. Duncan, M.T. Goodrich, S.G. Kobourov, "Balanced Aspect Ratio Trees: Combining



**Patent Owner, NTECH Properties, Inc. - Ex. 2001, p. 32**

the Benefits of $k$-D Trees and Octrees," *J. Algorithms*, **38**, 2001, 303–333.

J-42. G. Barequet, M. Dickerson, and M.T. Goodrich, "Voronoi Diagrams for Polygon-Offset Distance Functions," *Discrete and Computational Geometry*, **25**(2), 2001, 271–291.

J-43. C.C. Cheng, C.A. Duncan, M.T. Goodrich, and S.G. Kobourov, "Drawing Planar Graphs with Circular Arcs," *Discrete and Computational Geometry*, **25**(3), 2001, 405–418.

J-44. N.M. Amato, M.T. Goodrich, and E.A. Ramos, "A Randomized Algorithm for Triangulating a Simple Polygon in Linear Time," *Discrete and Computational Geometry*, **26**(2), 2001, 245–265.

J-45. R. Tamassia, M.T. Goodrich, L. Vismara, M. Handy, G. Shubina, R. Cohen, B. Hudson, R.S. Baker, N. Gelfand, and U. Brandes, "JDSL: The Data Structures Library in Java," *Dr. Dobbs Journal*, **323**, 2001, 21–31.

J-46. G. Barequet, D.Z. Chen, O. Daescu, M.T. Goodrich, and J.S. Snoeyink, "Efficiently Approximating Polygonal Paths in Three and Higher Dimensions," *Algorithmica*, **33**(2), 2002, 150–167.

J-47. T. Chan, M.T. Goodrich, S.R. Kosaraju, and R. Tamassia, "Optimizing Area and Aspect Ratio in Straight-Line Orthogonal Tree Drawings," *Computational Geometry: Theory and Applications*, **23**(2), 2002, 153–162.

J-48. C.A. Duncan, M.T. Goodrich, and S.G. Kobourov, "Planarity-Preserving Clustering and Embedding for Large Planar Graphs," *Computational Geometry: Theory and Applications*, **24**(2), 2003, 95–114.

J-49. A.L. Buchsbaum and M.T. Goodrich, "Three-Dimensional Layers of Maxima," *Algorithmica*, **39**, 2004, 275–286.

J-50. G. Barequet, M.T. Goodrich, and C. Riley, "Drawing Graphs with Large Vertices and Thick Edges," *J. of Graph Algorithms and Applications* (JGAA), **8**(1), 2004, 3–20.

J-51. G. Barequet, M.T. Goodrich, A. Levi-Steiner, and D. Steiner, "Contour Interpolation by Straight Skeletons," *Graphical Models* (GM), **66**(4), 2004, 245–260.

J-52. P. Gajer, M.T. Goodrich, and S.G. Kobourov, "A Multi-Dimensional Approach to Force-Directed Layouts of Large Graphs," *Computational Geometry: Theory and Applications*, **29**(1), 3–18, 2004.

J-53. G. Barequet, P. Bose, M.T. Dickerson, and M.T. Goodrich, "Optimizing a Constrained Convex Polygonal Annulus," *J. of Discrete Algorithms* (JDA), **3**(1), 1–26, 2005.

J-54. A. Bagchi, A.L. Buchsbaum, and M.T. Goodrich, "Biased Skip Lists," *Algorithmica*, **42**(1), 31–48, 2005.

J-55. M. Dickerson, D. Eppstein, M.T. Goodrich, J.Y. Meng, "Confluent Drawings: Visualizing Non-planar Diagrams in a Planar Way," *J. of Graph Algorithms and Applications* (JGAA), **9**(1), 31–52, 2005.

J-56. A. Bagchi, A. Chaudhary, M.T. Goodrich, C. Li, and M. Shmueli-Scheuer, "Achieving Communication Efficiency through Push-Pull Partitioning of Semantic Spaces to Disseminate Dynamic Information," *IEEE Trans. on Knowledge and Data Engineering* (TKDE), **18**(10), 1352–1367, 2006.

J-57. D. Eppstein, M.T. Goodrich, and J.Y. Meng, "Confluent Layered Drawings," *Algorithmica*, **47**(4), 439–452, 2007.

J-58. A. Bagchi, A. Chaudhary, D. Eppstein, and M.T. Goodrich, "Deterministic Sampling and Range Counting in Geometric Data Streams," *ACM Transactions on Algorithms*, **3**(2), Article 16, 2007, 18 pages.

J-59. D. Eppstein, M.T. Goodrich, and D. Hirschberg, "Improved Combinatorial Group Testing



**Patent Owner, NTECH Properties, Inc. - Ex. 2001, p. 33**

Algorithms for Real-World Problem Sizes," *SIAM Journal on Computing*, **36**(5), 1360–1375, 2007.

J-60. D. Eppstein, M.T. Goodrich, and J.Z. Sun, "Skip Quadtrees: Dynamic Data Structures for Multidimensional Point Sets," *Int. Journal on Computational Geometry and Applications*, **18**(1/2), 131–160, 2008.

J-61. M.T. Goodrich, "Probabilistic Packet Marking for Large-Scale IP Traceback," *IEEE/ACM Transactions on Networking*, **16**(1), 15–24, 2008.

J-62. M.T. Goodrich and D.S. Hirschberg, "Improved Adaptive Group Testing Algorithms with Applications to Multiple Access Channels and Dead Sensor Diagnosis," *Journal of Combinatorial Optimization*, **15**(1), 95–121, 2008.

J-63. M.T. Goodrich, R. Tamassia, and D. Yao, "Notarized Federated ID Management and Authentication," *Journal of Computer Security*, **16**(4), 399–418, 2008.

J-64. M.T. Goodrich, "Pipelined Algorithms to Detect Cheating in Long-Term Grid Computations," *Theoretical Computer Science*, **408**, 199–207, 2008.

J-65. D. Eppstein, M.T. Goodrich, E. Kim, and R. Tamstorf, "Motorcycle Graphs: Canonical Quad Mesh Partitioning," *Computer Graphics Forum*, special issue on papers from 6th European Symp. on Geometry Processing (SGP), **27**(6), 1477–1486, 2008.

J-66. M.T. Goodrich, M. Sirivianos, J. Solis, C. Soriente, G. Tsudik, E. Uzun, "Using Audio in Secure Device Pairing," *Int. J. Security and Networks*, **4**(1/2), 57–68, 2009.

J-67. M.T. Goodrich, "On the Algorithmic Complexity of the Mastermind Game with Black-Peg Results," *Information Processing Letters*, **109**, 675–678, 2009.

J-68. D. Eppstein, M.T. Goodrich, E. Kim, and R. Tamstorf, "Approximate Topological Matching of Quad Meshes," *The Visual Computer*, **25**(8), 771–783, 2009.

J-69. D. Eppstein and M.T. Goodrich, "Succinct Greedy Geometric Routing Using Hyperbolic Geometry," *IEEE Transactions on Computers*, **60**(11), 1571–1580, 2011. Posted online Dec. 2010, IEEE Computer Society Digital Library.

J-70. D. Eppstein, M.T. Goodrich, and D. Strash, "Linear-Time Algorithms for Geometric Graphs with Sublinearly Many Edge Crossings," *SIAM Journal on Computing*, **39**(8), 3814–3829. 2010.

J-71. M.T. Goodrich, R. Tamassia, and N. Triandopoulos, "Efficient Authenticated Data Structures for Graph Connectivity and Geometric Search Problems," *Algorithmica*, **60**(3), 505–552, 2011.

J-72. D. Eppstein and M.T. Goodrich, "Straggler Identification in Round-Trip Data Streams via Newton's Identities and Invertible Bloom Filters," *IEEE Transactions on Knowledge and Data Engineering* (TKDE), **23**(2), 297–306, 2011.

J-73. C.A. Duncan, M.T. Goodrich, S.G. Kobourov, "Planar Drawings of Higher-Genus Graphs," *Journal of Graph Algorithms and Applications*, **15**(1), 7–32, 2011.

J-74. M.T. Dickerson, M.T. Goodrich, T.D. Dickerson, and Y.D. Zhuo "Round-Trip Voronoi Diagrams and Doubling Density in Geographic Networks," *Transactions on Computational Science*, M.L. Gavrilova et al. (Eds.), Vol. 14, LNCS 6970, 211–238, 2011.

J-75. M.T. Goodrich, "Randomized Shellsort: A Simple Data-Oblivious Sorting Algorithm," *Journal of the ACM*, **58**(6), Article No. 27, 2011.

J-76. C.A. Duncan, D. Eppstein, M.T. Goodrich, S. Kobourov, and M. Nöllenburg, "Lombardi Drawings of Graphs," *Journal of Graph Algorithms and Applications (JGAA)*, **16**(1), 85–108, 2012.

J-77. E. Wolf-Chambers, D. Eppstein, M.T. Goodrich, and M. Löffler, "Drawing Graphs in the



**Patent Owner, NTECH Properties, Inc. - Ex. 2001, p. 34**

Plane with a Prescribed Outer Face and Polynomial Area," *Journal of Graph Algorithms and Applications (JGAA)*, **16**(2), 243–259, 2012.

J-78. M.T. Goodrich, D. Nguyen, O. Ohrimenko, C. Papamanthou, R. Tamassia, N. Triandopoulos, and C.V. Lopes, "Efficient Verification of Web-Content Searching Through Authenticated Web Crawlers," *Proc. VLDB*, **5**(10):920-931, 2012.

J-79. D. Eppstein, M.T. Goodrich, D. Strash, and L. Trott, "Extended Dynamic Subgraph Statistics Using h-Index Parameterized Data Structures," *Theoretical Computer Science*, **447**, 44–52, 2012.

J-80. M.T. Goodrich, "Learning Character Strings via Mastermind Queries, With a Case Study Involving mtDNA," *IEEE Transactions on Information Theory*, **58**(11), 6726–6736, 2012.

J-81. A.U. Asuncion and M.T. Goodrich, "Nonadaptive Mastermind Algorithms for String and Vector Databases, with Case Studies," *IEEE Transactions on Knowledge and Data Engineering* (TKDE), **25**(1), 131–144, 2013.

J-82. C.A. Duncan, D. Eppstein, M.T. Goodrich, S. Kobourov, and M. Nöllenburg, "Drawing Trees with Perfect Angular Resolution and Polynomial Area," *Discrete & Computational Geometry*, **49**(2), 157–182, 2013.

J-83. E. Angelino, M.T. Goodrich, M. Mitzenmacher and J. Thaler, "External Memory Multimaps," *Algorithmica*, **67**(1), 23–48, 2013.

J-84. D. Eppstein, M.T. Goodrich, M. Löffler, D. Strash and L. Trott, "Category-Based Routing in Social Networks: Membership Dimension and the Small-World Phenomenon," *Theoretical Computer Science*, **514**, 96–104, 2013.

J-85. M.T. Goodrich, "Spin-the-bottle Sort and Annealing Sort: Oblivious Sorting via Round-robin Random Comparisons," *Algorithmica*, **68**(4), 835–858, 2014.

J-86. Michael J. Bannister, William E. Devanny, David Eppstein, and M.T. Goodrich, "The Galois Complexity of Graph Drawing: Why Numerical Solutions are Ubiquitous for Force-Directed, Spectral, and Circle Packing Drawings," *Journal of Graph Algorithms and Applications*, **19**(2), 619–656, 2015.

J-87. C. Duncan, D. Eppstein, M.T. Goodrich, S.G. Kobourov and M. Löffler, "Planar and Poly-Arc Lombardi Drawings," *Journal of Computational Geometry* (JoCG), **9**(1), 328–355, 2018.

J-88. G. Barequet, D. Eppstein, M.T. Goodrich, and N. Mamano, "Stable-Matching Voronoi Diagrams: Combinatorial Complexity and Algorithms," *Journal of Computational Geometry* (JoCG), **11**(1), 26–59, 2020.

J-89. M.T. Goodrich, Z.M. Liang, and S. Zhao, "Inverse-Rendering Based Analysis of the Fine Illumination Effects in the Salvator Mundi," *Leonardo*, **53**(4), 380–386, 2020.

J-90. W.E. Devanny, M.T. Goodrich, S. Irani, "A Competitive Analysis for the Start-Gap Algorithm for Online Memory Wear Leveling," *Information Processing Letters*, **116**, 106042, 2021.

J-91. G. Barequet, M. De, and M.T. Goodrich, "Convex-Straight-Skeleton Voronoi Diagrams for Segments and Convex Polygons," *Algorithmica*, **83**(7), 2245–2272, 2021.

J-92. G. Da Lozzo, D. Eppstein, M.T. Goodrich, and S. Gupta, "C-Planarity Testing of Embedded Clustered Graphs with Bounded Dual Carving-Width," *Algorithmica*, **83**(8), 2471–2502, 2021.

J-93. M. Shinder, M.T. Goodrich, O. Gila, M. Dillencourt, "Beyond Big O: Teaching Experimental Algorithmics," *Journal of Computing Sciences in Colleges*, **37**(10), 23–36, 2022.

J-94. P. Choudhary, M.T. Goodrich, S. Gupta, H. Khodabandeh, P. Matias, and V. Raman, "Improved Kernels for Tracking Paths," *Information Processing Letters*, **181**, 106360, 1–11,



**Patent Owner, NTECH Properties, Inc. - Ex. 2001, p. 35**

2023.

J-95. M. Dillencourt and M.T. Goodrich, "Simplified Chernoff Bounds with Powers-of-Two Probabilities," *Information Processing Letters*, **182**, 106397, 1–7, 2023.

J-96. S. Han, V. Chakraborty, M.T. Goodrich, S. Mehrotra, S. Sharma, "VEIL: A Storage and Communication Efficient Volume-Hiding Algorithm," *Proc. ACM Management of Data* (SIGMOD), **1**(4), 265:1-265:27, 2023.

J-97. M.A. Bender, M. Farach-Colton, M.T. Goodrich, and H. Komlos, "History-Independent Dynamic Partitioning: Operation-Order Privacy in Ordered Data Structures," *Proc. ACM Management of Data* (PODS), **2**(2), 108:1-108:27, 2024. **Best Paper Award**

J-98. M. Dillencourt, M.T. Goodrich, and M. Mitzenmacher, "Leveraging Parameterized Chernoff Bounds for Simplified Algorithm Analyses," *Information Processing Letters*, **187**, 106516, 1–7, 2025 (posted online June 2024).

**Papers in Proceedings:**

C-1. M.J. Atallah and M.T. Goodrich, "Efficient Parallel Solutions to Geometric Problems," *1985 IEEE Int. Conf. on Parallel Processing (ICPP)*, 411–417. (Proceedings version of J-1.)

C-2. F. Berman, M.T. Goodrich, C. Koelbel, W. Robison, and K. Showell, "Prep-P: A Mapping Preprocessor for CHiP Computers," *1985 IEEE Int. Conf. on Parallel Processing*, 731–733.

C-3. M.J. Atallah and M.T. Goodrich, "Parallel Algorithms For Some Functions of Two Convex Polygons," *24th Allerton Conf. on Communication, Control and Computing*, 1986, 758–767. (Proceedings version of J-4.)

C-4. M.J. Atallah and M.T. Goodrich, "Efficient Plane Sweeping in Parallel," *2nd ACM Symp. on Computational Geometry* (SoCG), 1986, 216–225.

C-5. M.T. Goodrich, "A Polygonal Approach to Hidden-Line Elimination," *25th Allerton Conf. on Communication, Control, and Computing*, 1987, 849–858. (Proceedings version of J-12.)

C-6. M.J. Atallah, R. Cole, and M.T. Goodrich, "Cascading Divide-and-Conquer: A Technique for Designing Parallel Algorithms," *28th IEEE Symp. on Foundations of Computer Science* (FOCS), 1987, 151-160. (Proceedings version of J-5.)

C-7. M.J. Atallah, M.T. Goodrich, and S.R. Kosaraju, "Parallel Algorithms for Evaluating Sequences of Set-Manipulation Operations," *3rd Aegean Workshop on Computing* (AWOC), *Lecture Notes in Computer Science* (LNCS): 319, Springer-Verlag, 1988, 1–10. (Proceedings version of J-19.)

C-8. R. Cole and M.T. Goodrich, "Optimal Parallel Algorithms for Polygon and Point-Set Problems," *4th ACM Symp. on Computational Geometry* (SoCG), 1988, 201–210. (Proceedings version of J-11.)

C-9. M.T. Goodrich, "Intersecting Line Segments in Parallel with an Output-Sensitive Number of Processors," *1989 ACM Symp. on Parallel Algorithms and Architectures* (SPAA), 127–137. (Proceedings version of J-10.)

C-10. M.T. Goodrich and S.R. Kosaraju, "Sorting on a Parallel Pointer Machine with Applications to Set Expression Evaluation," *30th IEEE Symp. on Foundations of Computer Science* (FOCS), 1989, 190–195. (Proceedings version of J-24.)

C-11. M.T. Goodrich, C. Ó'Dúnlaing, and C. Yap "Constructing the Voronoi Diagram of a Set of Line Segments in Parallel," *Lecture Notes in Computer Science 382, Algorithms and Data Structures* (WADS), Springer-Verlag, 1989, 12–23. (Proceedings version of J-14.)

C-12. M.T. Goodrich and J.S. Snoeyink, "Stabbing Parallel Segments with a Convex Polygon," *Lecture Notes in Computer Science 382, Algorithms and Data Structures* (WADS), Springer-Verlag, 1989, 231–242. (Proceedings version of J-8.)



**Patent Owner, NTECH Properties, Inc. - Ex. 2001, p. 36**

C-13. J. Johnstone and M.T. Goodrich, "A Localized Method for Intersecting Plane Algebraic Curve Segments," *New Advances in Computer Graphics: Proc. of Computer Graphics International '89*, R.A. Earnshaw, B. Wyvel, eds., Springer-Verlag, 1989, 165–181. (Proceedings version of J-9.)

C-14. M.J. Atallah, P. Callahan, and M.T. Goodrich, "P-Complete Geometric Problems," *2nd ACM Symp. on Parallel Algorithms and Architectures* (SPAA), 1990, 317–326. (Proceedings version of J-18.)

C-15. R. Cole, M.T. Goodrich, C. Ó Dúnlaing, "Merging Free Trees in Parallel for Efficient Voronoi Diagram Construction", *17th Int. Conf. on Automata, Languages, and Programming* (ICALP), 1990, 432–445. (Proceedings version of J-27.)

C-16. M.T. Goodrich, M.J. Atallah, and M. Overmars, "An Input-Size/Output-Size Trade-Off in the Time-Complexity of Rectilinear Hidden-Surface Removal", *17th Int. Conf. on Automata, Languages, and Programming* (ICALP), 1990, 689–702. (Proceedings version of J-17.)

C-17. M.T. Goodrich, M. Ghouse, and J. Bright, "Generalized Sweep Methods for Parallel Computational Geometry," *2nd ACM Symp. on Parallel Algorithms and Architectures* (SPAA), 1990, 280–289. (Proceedings version of J-23.)

C-18. M.T. Goodrich, "Applying Parallel Processing Techniques to Classification Problems in Constructive Solid Geometry," *1st ACM-SIAM Symp. on Discrete Algorithms* (SODA), 1990, 118–128. (Proceedings version of J-33.)

C-19. M.T. Goodrich, S. Shauck, and S. Guha, "Parallel Methods for Visibility and Shortest Path Problems in Simple Polygons," *6th ACM Symp. on Computational Geometry* (SoCG), 1990, 73–82. (Proceedings version of J-13.)

C-20. M. Ghouse and M.T. Goodrich, "In-Place Techniques for Parallel Convex Hull Algorithms," *3rd ACM Symp. on Parallel Algorithms and Architectures* (SPAA), 1991, 192–203. (Proceedings version of J-30.)

C-21. M.T. Goodrich, "Constructing Arrangements Optimally in Parallel," *3rd ACM Symp. on Parallel Algorithms and Architectures* (SPAA), 1991, 169–179. (Proceedings version of J-16.)

C-22. M.T. Goodrich and R. Tamassia, "Dynamic Trees and Dynamic Point Location," *23rd ACM Symp. on Theory of Computing* (STOC), 1991, 523–533. (Proceedings version of J-35.)

C-23. M.T. Goodrich, "Using Approximation Algorithms to Design Parallel Algorithms that May Ignore Processor Allocation," *32nd IEEE Symp. on Foundations of Computer Science* (FOCS), 1991, 711–722.

C-24. M.T. Goodrich, "Planar Separators and Parallel Polygon Triangulation," *24th ACM Symp. on Theory of Computing* (STOC), 1992, 507–516. (Proceedings version of J-22.)

C-25. M.T. Goodrich, Y. Matias, U. Vishkin, "Approximate Parallel Prefix Computation and Its Applications," *7th IEEE Int. Parallel Processing Symp* (IPPS), 1993, 318–325.

C-26. M. Ghouse and M.T. Goodrich, "Experimental Evidence for the Power of Random Sampling in Practical Parallel Algorithms," *7th IEEE Int. Parallel Processing Symp* (IPPS), 1993, 549–556.

C-27. L.P. Chew, M.T. Goodrich, D.P. Huttenlocher, K. Kedem, J.M. Kleinberg, and D. Kravets, "Geometric Pattern Matching under Euclidean Motion," *5th Canadian Conf. on Computational Geometry* (CCCG), 1993, 151–156. (Proceedings version of J-31.)

C-28. M.T. Goodrich, "Geometric Partitioning Made Easier, Even in Parallel," *9th ACM Symp. on Computational Geometry* (SoCG), 1993, 73–82.

C-29. M.T. Goodrich and R. Tamassia, "Dynamic Ray Shooting and Shortest Paths via Balanced Geodesic Triangulations," *9th ACM Symp. on Computational Geometry* (SoCG), 1993, 318–



**Patent Owner, NTECH Properties, Inc. - Ex. 2001, p. 37**

327. (Proceedings version of J-29.)

C-30. A. Garg, M.T. Goodrich, and R. Tamassia, "Area-Efficient Upward Tree Drawings," *9th ACM Symp. on Computational Geometry* (SoCG), 1993, 359–368. (Proceedings version of J-25.)

C-31. M.H. Nodine, M.T. Goodrich, and J.S. Vitter, "Blocking for External Graph Searching," *12th ACM Symp. on Principles of Database Systems* (PODS), 1993, 222–232. (Proceedings version of J-26.)

C-32. E.M. Arkin, M.T. Goodrich, J.S.B. Mitchell, D. Mount, and S.S. Skiena, "Point Probe Decision Trees for Geometric Concept Classes," *Lecture Notes in Computer Science 709: Algorithms and Data Structures* (WADS), Springer-Verlag, 1993, 95–106.

C-33. M.T. Goodrich, J.J. Tsay, D.E. Vengroff, and J.S. Vitter, "External-Memory Computational Geometry," *34th IEEE Symp. on Foundations of Computer Science* (FOCS), 1993, 714–723.

C-34. M.T. Goodrich, Y. Matias, and U. Vishkin, "Optimal Parallel Approximation Algorithms for Prefix Sums and Integer Sorting," *5th ACM-SIAM Symp. on Discrete Algorithms* (SODA), 1994, 241–250.

C-35. H. Brönnimann and M.T. Goodrich, "Almost Optimal Set Covers in Finite VC-Dimension," *10th ACM Symp. on Computational Geometry* (SoCG), 1994, 293–302. (Proceedings version of J-21.)

C-36. M.T. Goodrich, "Efficient Piecewise-Linear Function Approximation Using the Uniform Metric," *10th ACM Symp. on Computational Geometry* (SoCG), 1994, 322–331. (Proceedings version of J-20.)

C-37. M.J. Atallah, M.T. Goodrich, and K. Ramaiyer, "Biased Finger Trees and Three-Dimensional Layers of Maxima," *10th ACM Symp. on Computational Geometry* (SoCG), 1994, 150–159.

C-38. M.T. Goodrich, J.S.B. Mitchell, and M.W. Orletsky, "Practical Methods for Approximate Geometric Pattern Matching under Rigid Motions," *10th ACM Symp. on Computational Geometry* (SoCG), 1994, 103–112. (Proceedings version of J-37.)

C-39. N.M. Amato, M.T. Goodrich, E.A. Ramos, "Parallel Algorithms for Higher-Dimensional Convex Hulls," *35th IEEE Symp. on Foundations of Computer Science* (FOCS), 1994, 683–694.

C-40. P.J. Tanenbaum, M.T. Goodrich, and E.R. Scheinerman, "Characterization and Recognition of Point-Halfspace and Related Orders," *2nd Int. Symp. on Graph Drawing* (GD), Lecture Notes in Computer Science 894, Springer-Verlag, 1994, 234–245.

C-41. Y.J. Chiang, M.T. Goodrich, E.F. Grove, R. Tamassia, D.E. Vengroff, and J.S. Vitter, "External-Memory Graph Algorithms," *6th ACM-SIAM Symp. on Discrete Algorithms* (SODA), 1995, 139–149.

C-42. N.M. Amato, M.T. Goodrich, and E.A. Ramos, "Computing Faces in Segment and Simplex Arrangements," *27th ACM Symp. on Theory of Computing* (STOC), 1995, 672–682.

C-43. P. Callahan, M.T. Goodrich, and K. Ramaiyer, "Topology B-Trees and Their Applications," *1995 Workshop on Algorithms and Data Structures* (WADS), Lecture Notes in Computer Science 955, Springer-Verlag, 381–392.

C-44. G. Das and M.T. Goodrich, "On the Complexity of Approximating and Illuminating Three-Dimensional Convex Polyhedra," *1995 Workshop on Algorithms and Data Structures* (WADS), Lecture Notes in Computer Science 955, Springer-Verlag, 74–85. (Proceedings version of J-28.)

C-45. M.T. Goodrich, "Fixed-Dimensional Parallel Linear Programming via Relative $\epsilon$-Approximations," *7th ACM-SIAM Symp. on Discrete Algorithms* (SODA), 1996, 132–141.



**Patent Owner, NTECH Properties, Inc. - Ex. 2001, p. 38**

(Proceedings version of J-32.)

C-46. M. Chrobak, M.T. Goodrich, and R. Tamassia, "Convex Drawings of Graphs in Two and Three Dimensions," *12th ACM Symp. on Computational Geometry* (SoCG), 1996, 319–328.

C-47. M.T. Goodrich, "Communication-Efficient Parallel Sorting," *28th ACM Symp. on Theory of Computing* (STOC), 1996, 247–256. (Proceedings version of J-38.)

C-48. T. Chan, M.T. Goodrich, S.R. Kosaraju, and R. Tamassia, "Optimizing Area and Aspect Ratio in Straight-Line Orthogonal Tree Drawings," *4th Int. Symp. on Graph Drawing* (GD), Lecture Notes in Computer Science 1190, Springer-Verlag, 1996, 63–75. (Proceedings version of J-47.)

C-49. M.T. Goodrich, "Randomized Fully-Scalable BSP Techniques for Multi-Searching and Convex Hull Construction," *8th ACM-SIAM Symp. on Discrete Algorithms* (SODA), 1997, 767–776.

C-50. C.A. Duncan, M.T. Goodrich, and E.A. Ramos, "Efficient Approximation and Optimization Algorithms for Computational Metrology," *8th ACM-SIAM Symp. on Discrete Algorithms* (SODA), 1997, 121–130.

C-51. M.T. Goodrich, M. Orletsky, and K. Ramaiyer, "Methods for Achieving Fast Query Times in Point Location Data Structures," *8th ACM-SIAM Symp. on Discrete Algorithms* (SODA), 1997, 757–766.

C-52. M.T. Goodrich, L.J. Guibas, J. Hershberger, P.J. Tanenbaum, "Snap Rounding Line Segments Efficiently in Two and Three Dimensions," *13th ACM Symp. on Computational Geometry* (SoCG), 1997, 284–293.

C-53. G. Barequet, S.S. Bridgeman, C.A. Duncan, M.T. Goodrich, and R. Tamassia, "Classical Computational Geometry in GeomNet," *13th ACM Symp. on Computational Geometry* (SoCG), 1997, 412–414.

C-54. G. Barequet, A. Briggs, M. Dickerson, C. Dima, and M.T. Goodrich, "Animating the Polygon-Offset Distance Function," *13th ACM Symp. on Computational Geometry* (SoCG), 1997, 479–480, and the *Video Review for the 13th ACM Symp. on Computational Geometry* (SoCG).

C-55. G. Barequet, A. Briggs, M. Dickerson, and M.T. Goodrich, "Offset-Polygon Annulus Placement Problems," *1997 Workshop on Algorithms and Data Structures* (WADS), 1997, 378–391. (Proceedings version of J-34.)

C-56. G. Barequet, M. Dickerson, and M.T. Goodrich, "Voronoi Diagrams for Polygon-Offset Distance Functions," *1997 Workshop on Algorithms and Data Structures* (WADS), 1997, 200–209. (Proceedings version of J-42.)

C-57. N. Gelfand, M.T. Goodrich, and R. Tamassia, "Teaching Data Structure Design Patterns," *29th ACM SIGCSE Technical Symp. on Computer Science Education*, 1998, 331–335.

C-58. M.T. Goodrich and R. Tamassia, "Teaching the Analysis of Algorithms with Visual Proofs," *29th ACM SIGCSE Technical Symp. on Computer Science Education*, 1998, 207–211.

C-59. G. Barequet, D.Z. Chen, O. Daescu, M.T. Goodrich, and J.S. Snoeyink, "Efficiently Approximating Polygonal Paths in Three and Higher Dimensions," *1998 ACM Symp. on Computational Geometry* (SoCG), 1998, 317–326. (Proceedings version of J-46.)

C-60. M.T. Goodrich and C.G. Wagner, "A Framework for Drawing Planar Graphs with Curves and Polylines," *6th Int. Symp. on Graph Drawing* (GD), Lecture Notes in Computer Science 1547, Springer-Verlag, 1998, 153–166. (Proceedings version of J-40.)

C-61. C.A. Duncan, M.T. Goodrich, S.G. Kobourov, "Balanced Aspect Ratio Trees and Their Use for Drawing Very Large Graphs," *6th Int. Symp. on Graph Drawing* (GD), Lecture Notes in



**Patent Owner, NTECH Properties, Inc. - Ex. 2001, p. 39**

Computer Science 1547, Springer-Verlag, 1998, 111–124. (Proceedings version of J-39.)

C-62. M.T. Goodrich, M. Handy, B. Hudson, and R. Tamassia, "Abstracting Positional Information in Data Structures: Locators and Positions in JDSL," *Object-Oriented Programming, Systems, Languages & Applications (OOPSLA) '98 Technical Notes*, 1998.

C-63. M.T. Goodrich and J.G. Kloss II, "Tiered Vector: An Efficient Dynamic Array for JDSL," *Object-Oriented Programming, Systems, Languages & Applications (OOPSLA) '98 Technical Notes*, 1998.

C-64. M.T. Goodrich, M. Handy, B. Hudson, and R. Tamassia, "Accessing the Internal Organization of Data Structures in the JDSL Library," *Int. Workshop on Algorithm Engineering and Experimentation* (ALENEX), Springer-Verlag, Lecture Notes in Computer Science, Vol. 1619, 1999, 124–139.

C-65. C.A. Duncan, M.T. Goodrich, S.G. Kobourov, "Balanced Aspect Ratio Trees: Combining the Benefits of $k$-D Trees and Octrees," *10th ACM-SIAM Symp. on Discrete Algorithms* (SODA), 1999, 300–309. (Proceedings version of J-41.)

C-66. R.S. Baker, M. Boilen, M.T. Goodrich, R. Tamassia, and B.A. Stibel, "Testers and Visualizers for Teaching Data Structures," *30th ACM SIGCSE Technical Symp. on Computer Science Education*, 1999, 261–265.

C-67. M.T. Goodrich and R. Tamassia, "Using Randomization in the Teaching of Data Structures and Algorithms," *30th ACM SIGCSE Technical Symp. on Computer Science Education*, 1999, 53–57. (Proceedings version of Ch-5.)

C-68. G. Barequet, C. Duncan, M.T. Goodrich, S. Kumar, M. Pop, "Efficient Perspective-Accurate Silhouette Computation," *15th ACM Symp. on Computational Geometry* (SoCG), 1999, 417–418, and the *Video Review for the 15th ACM Symp. on Computational Geometry* (SoCG).

C-69. C.C. Cheng, C.A. Duncan, M.T. Goodrich, and S.G. Kobourov, "Drawing Planar Graphs with Circular Arcs," *7th Int. Symp. on Graph Drawing* (GD), Lecture Notes in Computer Science 1731, Springer-Verlag, 1999, 117–126. (Proceedings version of J-43.)

C-70. C.A. Duncan, M.T. Goodrich, and S.G. Kobourov, "Planarity-Preserving Clustering and Embedding for Large Planar Graphs," *7th Int. Symp. on Graph Drawing* (GD), Lecture Notes in Computer Science 1731, Springer-Verlag, 1999, 186–196. (Proceedings version of J-48.)

C-71. M.T. Goodrich and J.G. Kloss II, "Tiered Vectors: Efficient Dynamic Arrays for Rank-Based Sequences," *1999 Workshop on Algorithms and Data Structures* (WADS), Lecture Notes in Computer Science 1663, Springer-Verlag, 1999, 205–216.

C-72. M.T. Goodrich, "Competitive Tree-Structured Dictionaries," *11th ACM-SIAM Symp. on Discrete Algorithms* (SODA), 2000, 494–495.

C-73. N.M. Amato, M.T. Goodrich, and E.A. Ramos, "Computing the Arrangement of Curve Segments: Divide-and-Conquer Algorithms via Sampling," *11th ACM-SIAM Symp. on Discrete Algorithms* (SODA), 2000, 705–706.

C-74. S. Bridgeman, M.T. Goodrich, S.G. Kobourov, and R. Tamassia, "PILOT: An Interactive Tool for Learning and Grading," *31st ACM SIGCSE Technical Symp. on Computer Science Education*, 2000, 139–143.

C-75. S. Bridgeman, M.T. Goodrich, S.G. Kobourov, and R. Tamassia, "SAIL: A System for Generating, Archiving, and Retrieving Specialized Assignments in LaTeX," *31st ACM SIGCSE Technical Symp. on Computer Science Education*, 2000, 300–304.

C-76. N.M. Amato, M.T. Goodrich, and E.A. Ramos, "Linear-Time Triangulation of a Simple Polygon Made Easier Via Randomization," *16th ACM Symp. on Computational Geometry*



**Patent Owner, NTECH Properties, Inc. - Ex. 2001, p. 40**

(SoCG), 2000, 201-212. (Proceedings version of J-44.)

C-77. A.L. Buchsbaum, M.T. Goodrich, and J.R. Westbrook, "Range Searching Over Tree Cross Products," *8th European Symp. on Algorithms* (ESA), Lecture Notes in Computer Science 1879, Springer-Verlag, 2000, 120–131.

C-78. C.A. Duncan, M.T. Dickerson, and M.T. Goodrich, "$k$-D Trees are Better When Cut on the Longest Side," *8th European Symp. on Algorithms* (ESA), Lecture Notes in Computer Science 1879, Springer-Verlag, 2000, 179–190.

C-79. P. Gajer, M.T. Goodrich, and S.G. Kobourov, "A Fast Multi-Dimensional Algorithm for Drawing Large Graphs," *8th Int. Symp. on Graph Drawing* (GD), Lecture Notes in Computer Science 1984, Springer-Verlag, 2001, 211–221. (Proceedings version of J-52.)

C-80. G. Ateniese, B. de Medeiros, and M.T. Goodrich, "TRICERT: A Distributed Certified E-mail Scheme," *Network and Distributed Systems Security Symp.* (NDSS), 2001, 47–56.

C-81. M.T. Goodrich and R. Tamassia, "Teaching Internet Algorithmics," *32nd ACM SIGCSE Technical Symp. on Computer Science Education*, 2001, 129–133.

C-82. M. Pop, G. Barequet, C.A. Duncan, M.T. Goodrich, W. Hwang, and S. Kumar, "Efficient Perspective-Accurate Silhouette Computation and Applications," *17th ACM Symp. on Computational Geometry* (SoCG), 2001, 60–68.

C-83. M.T. Goodrich and R. Tamassia, "Implementation of an Authenticated Dictionary with Skip Lists and Commutative Hashing," *DARPA Information Survivability Conf. & Exposition II* (DISCEX), IEEE Press, 2001, 68–82.

C-84. A. Bagchi, A. Chaudhary, R. Garg, M.T. Goodrich, and V. Kumar, "Seller-Focused Algorithms for Online Auctioning," *2001 Workshop on Algorithms and Data Structures* (WADS), Lecture Notes in Computer Science 2125, Springer-Verlag, 2001, 135–147.

C-85. A. Anagnostopoulos, M.T. Goodrich, R. Tamassia, "Persistent Authenticated Dictionaries and Their Applications," *Information Security Conf.* (ISC), Lecture Notes in Computer Science 2200, Springer-Verlag, 2001, 379–393.

C-86. M.T. Dickerson and M.T. Goodrich, "Matching Points to a Convex Polygonal Boundary," *13th Canadian Conf. on Computational Geometry* (CCCG), 2001, 8 pages.

C-87. M.T. Goodrich, R. Tamassia, and J. Hasic, "An Efficient Dynamic and Distributed Cryptographic Accumulator," *5th Information Security Conf.* (ISC), Lecture Notes in Computer Science 2433, Springer-Verlag, 2002, 372–388.

C-88. A.L. Buchsbaum and M.T. Goodrich, "Three-Dimensional Layers of Maxima," *10th European Symp. on Algorithms* (ESA), Lecture Notes in Computer Science 2461, Springer-Verlag, 2002, 257–267. (Proceedings version of J-49.)

C-89. A. Bagchi, A.L. Buchsbaum, and M.T. Goodrich, "Biased Skip Lists," *13th Int. Symp. on Algorithms and Computation* (ISAAC), Lecture Notes in Computer Science 2518, Springer-Verlag, 2002, 1–13. (Proceedings version of J-54.)

C-90. M.T. Goodrich, "Efficient Packet Marking for Large-Scale IP Traceback," *9th ACM Conf. on Computer and Communications Security* (CCS), 2002, 117–126. (Proceedings version of J-61.)

C-91. M.T. Goodrich, R. Tamassia, N. Triandopoulos, and R. Cohen, "Authenticated Data Structures for Graph and Geometric Searching," *RSA Conf.—Cryptographers' Track* (CT-RSA), Lecture Notes in Computer Science 2612, Springer-Verlag, 2003, 295–313. (Proceedings version of J-71.)

C-92. M.T. Goodrich, M. Shin, R. Tamassia, and W.H. Winsborough, "Authenticated Dictionaries for Fresh Attribute Credentials," *1st Int. Conf. on Trust Management* (iTrust), Lecture Notes in Computer Science 2692, Springer-Verlag, 2003, 332–347.



**Patent Owner, NTECH Properties, Inc. - Ex. 2001, p. 41**

C-93. G. Barequet, M.T. Goodrich, A. Levi-Steiner, and D. Steiner, "Straight-Skeleton Based Contour Interpolation," *14th ACM-SIAM Symp. on Discrete Algorithms* (SODA), 2003, 119–127. (Proceedings version of J-51.)

C-94. G. Barequet, M.T. Goodrich, and C. Riley, "Drawing Graphs with Large Vertices and Thick Edges," *2003 Workshop and Data Structures and Algorithms* (WADS), Lecture Notes in Computer Science 2748, Springer-Verlag, 2003, 281–293. (Proceedings version of J-50.)

C-95. A. Bagchi, A. Chaudhary, M.T. Goodrich, and S. Xu, "Constructing Disjoint Paths for Secure Communication," *17th Int. Symp. on Distributed Computing* (DISC), Lecture Notes in Computer Science 2848, Springer-Verlag, 2003, 181–195.

C-96. M. Dickerson, D. Eppstein, M.T. Goodrich, J.Y. Meng, "Confluent Drawings: Visualizing Non-planar Diagrams in a Planar Way," *11th Int. Symp. on Graph Drawing* (GD), Lecture Notes in Computer Science 2912, Springer-Verlag, 2003, 1–12. (Proceedings version of J-55.)

C-97. F. Brandenberg, D. Eppstein, M.T. Goodrich, S. Kobourov, G. Liotta, P. Mutzel, "Selected Open Problems in Graph Drawing," *11th Int. Symp. on Graph Drawing* (GD), Lecture Notes in Computer Science 2912, Springer-Verlag, 2003, 515–539.

C-98. A. Bagchi, A. Chaudhary, D. Eppstein, and M.T. Goodrich, "Deterministic Sampling and Range Counting in Geometric Data Streams," *20th ACM Symp. on Computational Geometry* (SoCG), 144–151, 2004. (Proceedings version of J-58.)

C-99. M.T. Goodrich, J.Z. Sun, and R. Tamassia, "Efficient Tree-Based Revocation in Groups of Low-State Devices," *Advances in Cryptology* (CRYPTO), Springer, Lecture Notes in Computer Science 3152, 511–527, 2004.

C-100. D. Eppstein, M.T. Goodrich, and J.Y. Meng, "Confluent Layered Drawings," *12th Int. Symp. on Graph Drawing* (GD), Springer, Lecture Notes in Computer Science 3383, 184–194, 2004. (Proceedings version of J-57.)

C-101. M.J. Atallah, K.B. Frikken, M.T. Goodrich, and R. Tamassia, "Secure Biometric Authentication for Weak Computational Devices," *9th Int. Conf. on Financial Cryptography and Data Security*, Springer, Lecture Notes in Computer Science 3570, 357–371, 2005.

C-102. M.T. Goodrich, "Leap-Frog Packet Linking and Diverse Key Distributions for Improved Integrity in Network Broadcasts," *IEEE Symp. on Security and Privacy* (S&P), 196–207, 2005.

C-103. D. Eppstein, M.T. Goodrich, and J.Z. Sun, "The Skip Quadtree: A Simple Dynamic Data Structure for Multidimensional Data," *21st ACM Symp. on Computational Geometry* (SoCG), 296–305, 2005. (Proceedings version of J-60.)

C-104. M.J. Atallah, M.T. Goodrich, and R. Tamassia, "Indexing Information for Data Forensics," *3rd Applied Cryptography and Network Security Conf.* (ACNS), Lecture Notes in Computer Science 3531, Springer, 206–221, 2005.

C-105. W. Du and M.T. Goodrich, "Searching for High-Value Rare Events with Uncheatable Grid Computing," *3rd Applied Cryptography and Network Security Conf.* (ACNS), Lecture Notes in Computer Science 3531, Springer, 122–137, 2005.

C-106. L. Arge, D. Eppstein, and M.T. Goodrich, "Skip-Webs: Efficient Distributed Data Structures for Multi-Dimensional Data Sets," *24th ACM Symp. on Principles of Distributed Computing* (PODC), 2005.

C-107. D. Eppstein, M.T. Goodrich, and D. Hirschberg, "Improved Combinatorial Group Testing for Real-World Problem Sizes," *Workshop on Algorithms and Data Structures* (WADS), Lecture Notes in Computer Science 3608, Springer, 86–98, 2005. (Proceedings version of J-59.)

C-108. A. Chaudhary and M.T. Goodrich, "Balanced Aspect Ratio Trees Revisited," *Workshop on*



**Patent Owner, NTECH Properties, Inc. - Ex. 2001, p. 42**

*Algorithms and Data Structures* (WADS), Lecture Notes in Computer Science 3608, Springer, 73–85, 2005.

C-109. M.T. Goodrich, R. Tamassia, and D. Yao, "Accredited DomainKeys: A Service Architecture for Improved Email Validation," *2nd Conf. on Email and Anti-Spam* (CEAS), 1–8, 2005.

C-110. M.T. Goodrich, G.S. Lueker, and J.Z. Sun, "C-Planarity of Extrovert Clustered Graphs," *13th Int. Symp. Graph Drawing* (GD), 211–222, 2005.

C-111. D. Eppstein, M.T. Goodrich, J.Y. Meng, "Delta-Confluent Drawings," *13th Int. Symp. Graph Drawing* (GD), 165–176, 2005.

C-112. M.T. Goodrich, M.J. Nelson, and J.Z. Sun, "The Rainbow Skip Graph: A Fault-Tolerant Constant-Degree Distributed Data Structure," *17th ACM-SIAM Symp. on Discrete Algorithms* (SODA), 384–393, 2006.

C-113. M.T. Goodrich, M. Sirivianos, J. Solis, G. Tsudik, E. Uzun, "Loud And Clear: Human-Verifiable Authentication Based on Audio," *26th IEEE Int. Conf. on Distributed Computing Systems* (ICDCS), 1–8, 2006. (Proceedings version of J-66.)

C-114. M.T. Goodrich, R. Tamassia, and D. Yao, "Notarized Federated Identity Management for Web Services," *20th IFIP WG Working Conf. on Data and Application Security* (DBSec), Springer, Lecture Notes in Computer Science, Vol. 4127, 133–147, 2006. (Proceedings version of J-63.)

C-115. M.T. Goodrich and D.S. Hirschberg, "Efficient Parallel Algorithms for Dead Sensor Diagnosis and Multiple Access Channels," *18th ACM Symp. on Parallelism in Algorithms and Architectures* (SPAA), 118–127, 2006. (Proceedings version of J-62.)

C-116. Y. Cho, L. Bao, and M.T. Goodrich, "LAAC: A Location-Aware Access Control Protocol," *2006 3rd Annual Int. Conf. on Mobile and Ubiquitous Systems - Workshop on Ubiquitous Access Control* (IWUAC), 1–7, 2006.

C-117. M.B. Dillencourt, D. Eppstein, and M.T. Goodrich, "Choosing Colors for Geometric Graphs via Color Space Embeddings," *14th Int. Symp. Graph Drawing* (GD), Lecture Notes in Computer Science, Vol. 4372, Springer, 294–305, 2006.

C-118. D. Eppstein, M.T. Goodrich, and N. Sitchinava, "Guard Placement for Wireless Localization," *23rd ACM Symp. on Computational Geometry* (SoCG), 27–36, 2007.

C-119. M.T. Goodrich, C. Papamanthou, and R. Tamassia, "On the Cost of Persistence and Authentication in Skip Lists," *6th Workshop on Experimental Algorithms* (WEA), LNCS 4525, 94–107, 2007.

C-120. M.J. Atallah, M. Blanton, M.T. Goodrich, and S. Polu, "Discrepancy-Sensitive Dynamic Fractional Cascading, Dominated Maxima Searching, and 2-d Nearest Neighbors in Any Minkowski Metric," *Workshop on Algorithms and Data Structures* (WADS), LNCS, Vol. 4619, Springer, 114–126, 2007.

C-121. D. Eppstein and M.T. Goodrich, "Space-Efficient Straggler Identification in Round-Trip Data Streams via Newton's Identities and Invertible Bloom Filters," *Workshop on Algorithms and Data Structures* (WADS), LNCS, Vol. 4619, Springer, 2007, 638–649. (Proceedings version of J-72.)

C-122. M.T. Goodrich and J.Z. Sun, "Checking Value-Sensitive Data Structures in Sublinear Space," *18th Int. Symp. on Algorithms and Computation* (ISAAC), LNCS, vol. 4835, Springer, 2007, 353–364.

C-123. M.T. Goodrich, R. Tamassia, and N. Triandopoulos, "Super-Efficient Verification of Dynamic Outsourced Databases," *RSA Conf.—Cryptographers' Track* (CT-RSA), LNCS, vol. 4964, Springer, 2008, 407–424.



**Patent Owner, NTECH Properties, Inc. - Ex. 2001, p. 43**

C-124. D. Eppstein, M.T. Goodrich, E. Kim, and R. Tamstorf, "Approximate Topological Matching of Quadrilateral Meshes," *IEEE Int. Conf. on Shape Modeling and Applications* (SMI), 2008, 83–92. (Proceedings version of J-68.)

C-125. G. Barequet, D. Eppstein, M.T. Goodrich, and A. Waxman, "Straight Skeletons of Three-Dimensional Polyhedra," *16th European Symp. on Algorithms* (ESA), LNCS, vol. 5193, 2008, 148–160.

C-126. M.T. Goodrich, C. Papamanthou, R. Tamassia, and N. Triandopoulos, "Athos: Efficient Authentication of Outsourced File Systems," *11th Information Security Conf.* (ISC), LNCS, vol. 5222, 2008, 80–96.

C-127. L. Arge, M.T. Goodrich, M. Nelson, and N. Sitchinava, "Fundamental Parallel Algorithms for Private-Cache Chip Multiprocessors," *20th ACM Symp. on Parallelism in Algorithms and Architectures* (SPAA), 2008, 197–206.

C-128. D. Eppstein and M.T. Goodrich, "Succinct Greedy Graph Drawing in the Hyperbolic Plane," *16th Int. Symp. on Graph Drawing* (GD), LNCS, vol. 5417, Springer, 2008, 14–25. (Proceedings version of J-69.)

C-129. D. Eppstein and M.T. Goodrich, "Studying (Non-Planar) Road Networks Through an Algorithmic Lens," *16th ACM SIGSPATIAL Int. Conf. on Adv. in Geographic Information Systems* (GIS), 2008, 125–134. **Best Paper Award**.

C-130. M. Dickerson and M.T. Goodrich, "Two-Site Voronoi Diagrams in Geographic Networks," *16th ACM SIGSPATIAL Int. Conf. on Adv. in Geographic Information Systems* (GIS), 2008, 439–442.

C-131. D. Eppstein, M.T. Goodrich, and D. Strash, "Linear-Time Algorithms for Geometric Graphs with Sublinearly Many Crossings," *20th ACM-SIAM Symp. on Discrete Algorithms* (SODA), 2009, 150–159. (Proceedings version of J-70.)

C-132. M.T. Goodrich, "The Mastermind Attack on Genomic Data," *30th IEEE Symp. on Security and Privacy* (S&P), 2009, 204–218. (Proceedings version of J-80.)

C-133. W. Du, D. Eppstein, M.T. Goodrich, and G.S. Lueker, "On the Approximability of Geometric and Geographic Generalization and the Min-Max Bin Covering Problem," *Algorithms and Data Structures Symp.* (WADS), LNCS, vol. 5664, Springer, 2009, 242–253.

C-134. M.T. Goodrich, R. Tamassia, and N. Triandopoulos, J.Z. Sun, "Reliable Resource Searching in P2P Networks," *5th Int. ICST Conf. on Security and Privacy in Communication Networks* (SecureComm), Lecture Notes of ICST, vol. 19, Springer, 2009, 437–447.

C-135. C.A. Duncan, M.T. Goodrich, S.G. Kobourov, "Planar Drawings of Higher-Genus Graphs," *17th Int. Symp. on Graph Drawing* (GD), LNCS, Springer, vol. 5849, 2009, 45–56. (Proceedings version of J-73.)

C-136. D. Eppstein, M.T. Goodrich, L. Trott, "Going Off-road: Transversal Complexity in Road Networks," *17th ACM SIGSPATIAL Int. Conf. on Adv. in Geographic Information Systems* (GIS), 2009, 23–32.

C-137. M.T. Goodrich and Darren Strash, "Succinct Greedy Geometric Routing in the Euclidean Plane," *20th Int. Symp. on Algorithms and Computation* (ISAAC), LNCS, vol. 5878, Springer, 2009, 781–791.

C-138. M.T. Goodrich, "Randomized Shellsort: A Simple Oblivious Sorting Algorithm," *21st ACM-SIAM Symp. on Discrete Algorithms* (SODA), 2010, 1262–1277. (Proceedings version of J-75.)

C-139. L. Arge, M.T. Goodrich, and N. Sitchinava, "Parallel External Memory Graph Algorithms," *24th IEEE Int. Parallel & Distributed Processing Symp.* (IPDPS), 2010, 1–11.



**Patent Owner, NTECH Properties, Inc. - Ex. 2001, p. 44**

C-140. G. Wang, T. Luo, M.T. Goodrich, W. Du, and Z. Zhu, "Bureaucratic Protocols for Secure Two-Party Sorting, Selection, and Permuting," *5th ACM Symp. on Information, Computer and Communications Security*, 2010, 226–237.

C-141. M.T. Dickerson, M.T. Goodrich, and T.D. Dickerson, "Round-Trip Voronoi Diagrams and Doubling Density in Geographic Networks," *7th Int. Symp. on Voronoi Diagrams in Science and Engineering* (ISVD), IEEE Press, 132–141, 2010. (Proceedings version of J-74.)

C-142. M.T. Dickerson, D. Eppstein, and M.T. Goodrich, "Cloning Voronoi Diagrams via Retroactive Data Structures," *18th European Symp. on Algorithms* (ESA), LNCS, vol. 6346, 2010, 362–373.

C-143. C.A. Duncan, D. Eppstein, M.T. Goodrich, S. Kobourov, and M. Nöllenburg, "Lombardi Drawings of Graphs," *18th Int. Symp. on Graph Drawing* (GD), LNCS, vol. 6502, 2010, 195–207. (Proceedings version of J-76.)

C-144. E. Wolf-Chambers, D. Eppstein, M.T. Goodrich, and M. Löffler, "Drawing Graphs in the Plane with a Prescribed Outer Face and Polynomial Area," *18th Int. Symp. on Graph Drawing* (GD), LNCS, vol. 6502, 2010, 129–140. (Proceedings version of J-77.)

C-145. C.A. Duncan, D. Eppstein, M.T. Goodrich, S. Kobourov, and M. Nöllenburg, "Drawing Trees with Perfect Angular Resolution and Polynomial Area," *18th Int. Symp. on Graph Drawing* (GD), LNCS, vol. 6502, 2010, 183–194. (Proceedings version of J-82.)

C-146. A.U. Asuncion and M.T. Goodrich, "Turning Privacy Leaks into Floods: Surreptitious Discovery of Social Network Friendships and Other Sensitive Binary Attribute Vectors," *Workshop on Privacy in the Electronic Society* (WPES), held in conjunction with the 17th ACM Conf. on Computer and Communications Security (CCS), 2010, 21–30. (Proceedings version of J-81.)

C-147. D. Eppstein, M.T. Goodrich, D. Strash, and L. Trott, "Extended Dynamic Subgraph Statistics Using h-Index Parameterized Data Structures," *4th Annual Int. Conf. on Combinatorial Optimization and Applications* (COCOA), LNCS, vol. 6508, 2010, 128–141. (Proceedings version of J-79.)

C-148. M.T. Goodrich and D. Strash, "Priority Range Trees," *21st Int. Symp. on Algorithms and Computation* (ISAAC), LNCS, vol. 6506, 2010, 97–108.

C-149. D. Eppstein, M.T. Goodrich, R. Tamassia, "Privacy-Preserving Data-Oblivious Geometric Algorithms for Geographic Data," *18th ACM SIGSPATIAL Int. Conf. on Adv. in Geographic Information Systems* (GIS), 2010, 13–22.

C-150. M.T. Goodrich, "Spin-the-bottle Sort and Annealing Sort: Oblivious Sorting via Round-robin Random Comparisons," *8th Workshop on Analytic Algorithmics and Combinatorics* (ANALCO), in conjunction with the ACM-SIAM Symp. on Discrete Algorithms (SODA), 2011. (Proceedings version of J-85.)

C-151. M.T. Goodrich and F. Kerschbaum, "Privacy-Enhanced Reputation-Feedback Methods to Reduce Feedback Extortion in Online Auctions," *ACM Conf. on Data and Application Security and Privacy (CODASPY)*, 2011, 273–282.

C-152. M.T. Goodrich, "Data-Oblivious External-Memory Algorithms for the Compaction, Selection, and Sorting of Outsourced Data," *23rd ACM Symp. on Parallelism in Algorithms and Architectures* (SPAA), 2011, 379–388.

C-153. M.T. Goodrich and M. Mitzenmacher, "Large-Scale Multimaps," *23rd ACM Symp. on Parallelism in Algorithms and Architectures* (SPAA), 2011, 259–260.

C-154. D. Eppstein, M.T. Goodrich, F. Uyeda, and G. Varghese, "What's the Difference? Efficient Set Synchronization without Prior Context," *SIGCOMM* 218–229, 2011.



**Patent Owner, NTECH Properties, Inc. - Ex. 2001, p. 45**

C-155. D. Eppstein, M.T. Goodrich, and M. Löffler, "Tracking Moving Objects with Few Handovers," *Algorithms and Data Structures Symp.* (WADS), 362–373, LNCS, vol. 6844, 2011.

C-156. M.T. Goodrich and M. Mitzenmacher, "Privacy-Preserving Access of Outsourced Data via Oblivious RAM Simulation," *38th Int. Colloquium on Automata, Languages and Programming (ICALP)*, LNCS, vol. 6756, 2011, 576–587.

C-157. M.T. Goodrich and P. Pszona, "External-Memory Network Analysis Algorithms for Naturally Sparse Graphs," *European Symp. on Algorithms (ESA)*, LNCS, vol. 6942, 664–676, 2011.

C-158. C. Duncan, D. Eppstein, M.T. Goodrich, S.G. Kobourov and M. Löffler, "Planar and Poly-Arc Lombardi Drawings," *Int. Symp. Graph Drawing (GD)*, LNCS, vol. 7034, 308–319, 2011. (Proceedings version of J-87.)

C-159. R. Chernobelskiy, K. Cunningham, M.T. Goodrich, S.G. Kobourov and L. Trott, "Force-Directed Lombardi-Style Graph Drawing," *Int. Symp. Graph Drawing (GD)*, LNCS, vol. 7034, 320–331, 2011.

C-160. M.T. Goodrich and M. Mitzenmacher, "Invertible Bloom Lookup Tables," *49th Allerton Conf. on Communication, Control, and Computing*, IEEE Press, **invited paper**, 2011.

C-161. M.T. Goodrich, M. Mitzenmacher, O. Ohrimenko, and R. Tamassia, "Oblivious RAM Simulation with Efficient Worst-Case Access Overhead," *ACM Cloud Computing Security Workshop (CCSW)*, in conjunction with the 17th ACM Conf. on Computer and Communications Security (CCS), 95–100, 2011.

C-162. M.T. Goodrich and J.A. Simons, "Fully Retroactive Approximate Range and Nearest Neighbor Searching," *22nd Int. Symp. on Algorithms and Computation (ISAAC)*, Springer, LNCS, vol. 7074, 292–301, 2011.

C-163. E. Angelino, M.T. Goodrich, M. Mitzenmacher and J. Thaler, "External Memory Multimaps," *22nd Int. Symp. on Algorithms and Computation (ISAAC)*, Springer, LNCS, vol. 7074, 384–394, 2011. (Proceedings version of J-83.)

C-164. M.T. Goodrich, N. Sitchinava, and Q. Zhang, "Sorting, Searching, and Simulation in the MapReduce Framework," *22nd Int. Symp. on Algorithms and Computation (ISAAC)*, Springer, LNCS, vol. 7074, 374–383, 2011.

C-165. D. Eppstein, M.T. Goodrich, M. Löffler, D. Strash and L. Trott, "Category-Based Routing in Social Networks: Membership Dimension and the Small-World Phenomenon," *IEEE Int. Conf. on Computational Aspects of Social Networks* (CASoN), 102–107, 2011. (Proceedings version of J-84.)

C-166. M.T. Goodrich, O. Ohrimenko, M. Mitzenmacher, and R. Tamassia, "Privacy-Preserving Group Data Access via Stateless Oblivious RAM Simulation," *23rd ACM-SIAM Symp. on Discrete Algorithms* (SODA), 157–167, 2012.

C-167. M.T. Goodrich, O. Ohrimenko, M. Mitzenmacher, and R. Tamassia, "Practical Oblivious Storage," *2nd ACM Conf. on Data and Application Security and Privacy* (CODASPY). 13–24, 2012.

C-168. M.T. Goodrich and M. Mitzenmacher, "Anonymous Card Shuffling and its Applications to Parallel Mixnets," *39th Int. Colloquium on Automata, Languages and Programming* (ICALP), Springer, LNCS, vol. 6756, 576–587, 2012.

C-169. M.T. Goodrich, O. Ohrimenko, and R. Tamassia, "Graph Drawing in the Cloud: Privately Visualizing Relational Data using Small Working Storage," *20th Int. Symp. on Graph Drawing* (GD), Springer, LNCS, vol. 7704, 43–54, 2012.



**Patent Owner, NTECH Properties, Inc. - Ex. 2001, p. 46**

C-170. F.J. Brandenburg, D. Eppstein, A. Gleissner, M.T. Goodrich, K. Hanauer, and J. Reislhuber, "On the Density of Maximal 1-Planar Graphs," *20th Int. Symp. on Graph Drawing* (GD), Springer, LNCS, vol. 7704, 327–338, 2012.

C-171. M.J. Bannister, D. Eppstein, M.T. Goodrich, and L. Trott, "Force-Directed Graph Drawing Using Social Gravity and Scaling," *20th Int. Symp. on Graph Drawing* (GD), Springer, LNCS, vol. 7704, 414–425, 2012.

C-172. M.T. Goodrich and J.A. Simons, "More Graph Drawing in the Cloud: Data-Oblivious st-Numbering, Visibility Representations, and Orthogonal Drawing of Biconnected Planar Graphs," *20th Int. Symp. on Graph Drawing* (GD), Springer, LNCS, vol. 7704, 569–570, 2012.

C-173. M.T. Goodrich, D.S. Hirschberg, M. Mitzenmacher, and J. Thaler, "Cache-Oblivious Dictionaries and Multimaps with Negligible Failure Probability," *Mediterranean Conf. on Algorithms* (MedAlg), Springer, LNCS, vol. 7659, 203–218, 2012.

C-174. D. Eppstein, M.T. Goodrich, and D.S. Hirschberg, "Combinatorial Pair Testing: Distinguishing Workers from Slackers," *Algorithms and Data Structures Symp.* (WADS), Springer, LNCS, vol. 8037, 316–327, 2013.

C-175. D. Eppstein, M.T. Goodrich, and J.A. Simons, "Set-Difference Range Queries," *25th Canadian Conf. on Computational Geometry* (CCCG), 2013, http://www.cccg.ca/proceedings/2013/.

C-176. M.T. Goodrich and P. Pszona, "Cole's Parametric Search Technique Made Practical," *25th Canadian Conf. on Computational Geometry* (CCCG), 2013, http://www.cccg.ca/proceedings/2013/.

C-177. L. Arge, M.T. Goodrich, F. van Walderveen, "Computing Betweenness Centrality in External Memory," *IEEE Int. Conf. on Big Data* (BigData), 368–375, 2013.

C-178. M.T. Goodrich and P. Pszona, "Achieving Good Angular Resolution in 3D Arc Diagrams," *21st Int. Symp. Graph Drawing* (GD), Springer, LNCS, vol. 8242, 161–172, 2013.

C-179. M.T. Goodrich and P. Pszona, "Streamed Graph Drawing and the File Maintenance Problem," *21st Int. Symp. Graph Drawing* (GD), Springer, LNCS, vol. 8242, 256–267, 2013.

C-180. M.T. Goodrich, "Zig-zag Sort: A Simple Deterministic Data-Oblivious Sorting Algorithm Running in $O(n \log n)$ Time," *46th ACM Symp. on Theory of Computing* (STOC), 684–693, 2014.

C-181. D. Eppstein, M.T. Goodrich, M. Mitzenmacher, and P. Pszona, "Wear Minimization for Cuckoo Hashing: How Not to Throw a Lot of Eggs into One Basket," *Symp. on Experimental Algorithms* (SEA), Springer, LNCS, vol. 8504, 162–173, 2014.

C-182. O. Ohrimenko, M.T. Goodrich, and R. Tamassia, an E. Upfal, "The Melbourne Shuffle: Improving Oblivious Storage in the Cloud," *41st Int. Colloq. on Automata, Languages, and Programming* (ICALP), Springer, LNCS, vol. 8573, 556–567, 2014.

C-183. M.J. Bannister, W.E. Devanny, M.T. Goodrich, J.A. Simons, and Lowell Trott, "Windows into Geometric Events: Data Structures for Time-Windowed Querying of Temporal Point Sets," *26th Canadian Conf. on Computational Geometry* (CCCG), 2014.

C-184. M.J. Bannister, W.E. Devanny, D. Eppstein and M.T. Goodrich, "The Galois Complexity of Graph Drawing: Why Numerical Solutions are Ubiquitous for Force-Directed, Spectral, and Circle Packing Drawings," *22nd Int. Symp. Graph Drawing* (GD), Springer, LNCS, vol. 8871, 149–161, 2014. (Proceedings version of J-86.)

C-185. M.J. Alam, D. Eppstein, M.T. Goodrich, S. Kobourov and S. Pupyrev, "Balanced Circle Packings for Planar Graphs," *22nd Int. Symp. Graph Drawing* (GD), Springer, LNCS,

vol. 8871, 125–136, 2014.

C-186. M. Bannister, M.T. Goodrich, and P. Sampson, "Force-Directed 3D Arc Diagrams," *22nd Int. Symp. Graph Drawing* (GD), Springer, LNCS, vol. 8871, 521–522, 2014.

C-187. M.T. Goodrich and P. Pszona, "Two-Phase Bicriterion Search for Finding Fast and Efficient Electric Vehicle Routes," *22nd ACM SIGSPATIAL Int. Conf. on Adv. Geographic Information Systems* (GIS), 193–202, 2014.

C-188. M.T. Goodrich and J. Simons, "Data-Oblivious Graph Algorithms in Outsourced External Memory," *8th Int. Conf. on Combinatorial Optimization and Applications* (COCOA), LNCS, Vol. 8881, 241–257, 2014.

C-189. M.T. Goodrich, T. Johnson, M. Torres, "Knuthian Drawings of Series-Parallel Flowcharts," *23rd Int. Symp. on Graph Drawing and Network Visualization* (GD), Springer, LNCS, vol. 9411, 556–557, 2015. (See also http://arxiv.org/abs/1508.03931.)

C-190. M.T. Goodrich and A. Eldawy, "Parallel Algorithms for Summing Floating-Point Numbers," *28th ACM Symp. on Parallel Algorithms and Architectures* (SPAA), 13–22, 2016.

C-191. W.E. Devanny, M.T. Goodrich, and K. Jetviroj, "Parallel Equivalence Class Sorting: Algorithms, Lower Bounds, and Distribution-Based Analysis," *28th ACM Symp. on Parallel Algorithms and Architectures* (SPAA), 265–274, 2016.

C-192. D. Eppstein, M.T. Goodrich, J. Lam, N. Mamano, M. Mitzenmacher, and M. Torres, "Models and Algorithms for Graph Watermarking," *19th Information Security Conf.* (ISC), 283–301, 2016. **Best Student Paper Award**.

C-193. E. Ghosh, M.T. Goodrich, O. Ohrimenko, R. Tamassia, "Verifiable Zero-Knowledge Order Queries and Updates for Fully Dynamic Lists and Trees," *10th Conf. on Security and Cryptography for Networks* (SCN), 216–236, 2016.

C-194. M.T. Goodrich, E. Kornaropoulos, M. Mitzenmacher, R. Tamassia, "More Practical and Secure History-Independent Hash Tables," *21st European Symp. on Research in Computer Security* (ESORICS), 20-38, 2016.

C-195. J.J. Besa Vial, W.E. Devanny, D. Eppstein, and M.T. Goodrich, "Scheduling Autonomous Vehicle Platoons Through an Unregulated Intersection," *2016 Workshop on Algorithmic Approaches for Transportation Modeling, Optimization, and Systems* (ATMOS), 5:1–5:14.

C-196. M.J. Alam, M.B. Dillencourt, and M.T. Goodrich, "Capturing Lombardi Flow in Orthogonal Drawings by Minimizing the Number of Segments," *24th Int. Symp. on Graph Drawing and Network Visualization* (GD), LNCS, Vol. 9801, 608–610, 2016.

C-197. M.J. Alam, M.T. Goodrich, and T. Johnson, "Sibling-First Recursive Graph Drawing for Java Bytecode," *24th Int. Symp. on Graph Drawing and Network Visualization* (GD), LNCS, Vol. 9801, 611–612, 2016.

C-198. M.T. Goodrich, S. Gupta, and M. Torres, "A Topological Algorithm for Determining How Road Networks Evolve Over Time," *24th ACM SIGSPATIAL Int. Conf. on Advances in Geographic Information Systems* (GIS), 31:1–31:10, 2016.

C-199. M.J. Alam, M.T. Goodrich, and T. Johnson, "J-Viz: Finding Algorithmic Complexity Attacks via Graph Visualization of Java Bytecode," *13th IEEE Symp. on Visualization for Cyber Security* (VizSec), 1–8, 2016.

C-200. M.T. Goodrich, E. Kornaropoulos, M. Mitzenmacher, and R. Tamassia, "Auditable Data Structures," *2nd IEEE European Symp. on Security and Privacy* (EuroS&P), 285–300, 2017.

C-201. D. Eppstein, M.T. Goodrich, M. Mitzenmacher, and M. Torres, "2-3 Cuckoo Filters for Faster Triangle Listing and Set Intersection," *36th ACM SIGMOD-SIGACT-SIGART Symp. on Principles of Database Systems* (PODS), 247–260, 2017.



**Patent Owner, NTECH Properties, Inc. - Ex. 2001, p. 48**

C-202. D. Eppstein, M.T. Goodrich, and N. Mamano, "Algorithms for Stable Matching and Clustering in a Grid," *18th International Workshop on Combinatorial Image Analysis* (IWCIA), 117–131, 2017.

C-203. G. Ateniese, M.T. Goodrich, V. Lekakis, C. Papamanthou, E. Paraskevas, and R. Tamassia, "Accountable Storage," *15th International Conference on Applied Cryptography and Network Security* (ACNS), 623–644, 2017.

C-204. D. Eppstein and M.T. Goodrich, "Using Multi-Level Parallelism and 2-3 Cuckoo Filters for Faster Set Intersection Queries and Sparse Boolean Matrix Multiplication," *29th ACM Symp. on Parallelism in Algorithms and Architectures* (SPAA), 137–139, 2017.

C-205. W.E. Devanny, J. Fineman, M.T. Goodrich, and T. Kopelowitz, "The Online House Numbering Problem: Min-Max Online List Labeling," *25th European Symp. on Algorithms* (ESA), 33:1–33:15, 2017.

C-206. M.T. Goodrich, "Answering Spatial Multiple-Set Intersection Queries Using 2-3 Cuckoo Hash-Filters," *25th ACM SIGSPATIAL Int. Conf. on Advances in Geographic Information Systems* (GIS), 65:1–65:4, 2017.

C-207. D. Eppstein, M.T. Goodrich, D. Korkmaz, and N. Mamano, "Defining Equitable Geographic Districts in Road Networks via Stable Matching," *25th ACM SIGSPATIAL Int. Conf. on Advances in Geographic Information Systems* (GIS), 52:1–52:4, 2017.

C-208. M.T. Goodrich, "BIOS ORAM: Improved Privacy-Preserving Data Access for Parameterized Outsourced Storage,' *ACM Workshop on Privacy in the Electronic Society* (WPES), 41–50, 2017.

C-209. J.J. Besa Vial, W.E. Devanny, D. Eppstein, M.T. Goodrich, and T. Johnson, "Quadratic Time Algorithms Appear to be Optimal for Sorting Evolving Data," *Algorithm Engineering & Experiments* (ALENEX), 87–96, 2018.

C-210. D. Eppstein, M.T. Goodrich, N. Mamano, "Reactive Proximity Data Structures for Graphs," *13th Latin American Theoretical Informatics Symp.* (LATIN), LNCS, Vol. 10807, Springer, 777–789, 2018.

C-211. M.T. Goodrich, "Isogrammic-Fusion ORAM: Improved Statistically Secure Privacy-Preserving Cloud Data Access for Thin Clients," *13th ACM ASIA Conf. on Information, Computer and Communications Security* (ASIACCS), 699–706, 2018.

C-212. J.J. Besa Vial, W.E. Devanny, D. Eppstein, M.T. Goodrich, and T. Johnson, "Optimally Sorting Evolving Data," *45th Int. Colloq. on Automata, Languages, and Programming* (ICALP), 81:1–81:13, 2018.

C-213. G. Barequet, D. Eppstein, M.T. Goodrich, and N. Mamano, "Stable-Matching Voronoi Diagrams: Combinatorial Complexity and Algorithms," *45th Int. Colloq. on Automata, Languages, and Programming* (ICALP), 89:1–89:14, 2018.

C-214. G. Da Lozzo, D. Eppstein, M.T. Goodrich, and S. Gupta, "Subexponential-Time and FPT Algorithms for Embedded Flat Clustered Planarity," *44th Int. Workshop on Graph-Theoretic Concepts in Computer Science* (WG), 111–124, 2018.

C-215. G. Barequet, M. De, and M.T. Goodrich, "Computing Convex-Straight-Skeleton Voronoi Diagrams for Segments and Convex Polygons," *24th International Computing and Combinatorics Conference* (COCOON), 130–142, 2018. (Proceedings version of J-91.)

C-216. M.T. Goodrich and T. Johnson, "Low Ply Drawings of Trees and 2-Trees," *30th Canadian Conference on Computational Geometry* (CCCG), 1–9, 2018.

C-217. D. Eppstein, M.T. Goodrich, J. Jorgensen, and M.R. Torres, "Geometric Fingerprint Recognition via Oriented Point-Set Pattern Matching," *30th Canadian Conference on*

*Computational Geometry* (CCCG), 1–16, 2018.

C-218. G. Da Lozzo, D. Eppstein, M.T. Goodrich, and S. Gupta, "C-Planarity Testing of Embedded Clustered Graphs with Bounded Dual Carving-Width," *14th Int. Symp. on Parameterized and Exact Computation* (IPEC), LIPIcs, vol. 148, 9:1–9:17, 2019. **Best Paper Award**.

C-219. J.J. Besa, G. Da Lozzo, and M.T. Goodrich, "Computing k-Modal Embeddings of Planar Digraphs," *European Symp. on Algorithms* (ESA), 19:1–19:16, 2019.

C-220. N. Mamano, A. Efrat, D. Eppstein, D. Frishberg, M.T. Goodrich, S. Kobourov, P. Matias, and V. Polishchuk, "New Applications of Nearest-Neighbor Chains: Euclidean TSP and Motorcycle Graphs," *30th Int. Symp. on Algorithms and Computation* (ISAAC), 51:1–51:21, 2019.

C-221. D. Eppstein, M.T. Goodrich, J.A. Liu, and P.A. Matias, "Tracking Paths in Planar Graphs," *30th Int. Symp. on Algorithms and Computation* (ISAAC), 54:1–54:17, 2019.

C-222. J.J. Besa, M.T. Goodrich, T. Johnson, and M.C. Osegueda, "Minimum-Width Drawings of Phylogenetic Trees," *13th Int. Conf. on Combinatorial Optimization and Applications* (COCOA), LNCS, vol. 11949, 39–55, 2019.

C-223. M.T. Goodrich, Z.M. Liang, and S. Zhao, "Inverse-Rendering Based Analysis of the Fine Illumination Effects in the Salvator Mundi," *ACM SIGGRAPH Art Papers Program, 47th International Conference and Exhibition on Computer Graphics and Interactive Techniques*, 380–386, 2020. (Proceedings version of J-89.)

C-224. R. Afshar, M.T. Goodrich, P. Matias, and M.C. Osegueda, "Reconstructing Binary Trees in Parallel," *32nd ACM Symp. on Parallelism in Algorithms and Architectures* (SPAA), 491–492, 2020.

C-225. R. Afshar, M.T. Goodrich, P. Matias, and M.C. Osegueda, "Reconstructing Biological and Digital Phylogenetic Trees in Parallel," *European Symp. on Algorithms* (ESA), 3:1–3:24, 2020.

C-226. R. Afshar, A. Amir, M.T. Goodrich, and P. Matias, "Adaptive Exact Learning in a Mixed-Up World: Dealing with Periodicity, Errors, and Jumbled-Index Queries in String Reconstruction," *27th International Symp. on String Processing and Information Retrieval* (SPIRE), 155–174, 2020.

C-227. M.T. Goodrich, R. Jacob, N. Sitchinava, "Atomic Power in Forks: A Super-Logarithmic Lower Bound for Implementing Butterfly Networks in the Nonatomic Binary Fork-Join Model," *ACM-SIAM Symp. on Discrete Algorithms* (SODA), 2141–2153, 2021.

C-228. R. Afshar, M.T. Goodrich, P. Matias, and M.C. Osegueda, "Parallel Network Mapping Algorithms," *33rd ACM Symp. on Parallelism in Algorithms and Architectures* (SPAA), 410–413, 2021.

C-229. M.T. Goodrich, S. Gupta, H. Khodabandeh, and P. Matias, "How to Catch Marathon Cheaters: New Approximation Algorithms for Tracking Paths," *17th Algorithms and Data Structures Symp.* (WADS), 442–456, 2021.

C-230. R. Afshar, M.T. Goodrich, P. Matias, and M.C. Osegueda, "Mapping Networks via Parallel kth-Hop Traceroute Queries," *39th Int. Symp. on Theoretical Aspects of Computer Science* (STACS), LIPIcs, Vol. 219, 4:1–4:21, 2022.

C-231. R. Afshar, M.T. Goodrich, and E. Ozel, "Efficient Exact Learning Algorithms for Road Networks and Other Graphs with Bounded Clustering Degrees," *20th Int. Symp. on Experimental Algorithms* (SEA), 9:1–9:18, 2022.

C-232. G. Barequet, S. Fukuzawa, M.T. Goodrich, D. Mount, M. Osegueda, and E. Ozel, "Diamonds are Forever in the Blockchain: Geometric Polyhedral Point-Set Pattern



**Patent Owner, NTECH Properties, Inc. - Ex. 2001, p. 50**

Matching," *34th Canadian Conf. on Computational Geometry* (CCCG), 16–23, 2022.

C-233. R. Afshar and M.T. Goodrich, "Exact Learning of Multitrees and Almost-Trees Using Path Queries," *15th Latin American Theoretical Informatics Symp.* (LATIN), 293-311, 2022.

C-234. M.T. Goodrich and E. Ozel, "Modeling the Small-World Phenomenon with Road Networks," *30th ACM SIGSPATIAL Int. Conf. on Advances in Geographic Information Systems* (GIS), 46:1-46:10, 2022. **Best Paper Runner Up Award**.

C-235. M. Blanton, M.T. Goodrich, and C. Yuan, "Secure and Accurate Summation of Many Floating-Point Numbers," *23rd Privacy Enhancing Technologies Symp.* (PETS), 432–445, 2023.

C-236. M.T. Goodrich and R. Jacob, "Optimal Parallel Sorting with Comparison Errors," *35th ACM Symp. on Parallelism in Algorithms and Architectures* (SPAA), 355–365, 2023.

C-237. R. Afshar, M. Dillencourt, M.T. Goodrich, and E. Ozel "Noisy Sorting Without Searching: Data Oblivious Sorting with Comparison Errors," *21st Symposium on Experimental Algorithms* (SEA), 8:1–8:18, 2023.

C-238. O. Gila, M.T. Goodrich, and R. Tarjan, "Zip-zip Trees: Making Zip Trees More Balanced, Biased, Compact, or Persistent," *18th Algorithms and Data Structures Symp.* (WADS), 474–492, 2023. **Best Paper Award**

C-239. M.T. Goodrich and E. Ozel, "External-Memory Sorting with Comparison Errors," *18th Algorithms and Data Structures Symp.* (WADS), 493–506, 2023.

C-240. A. Chiu, D. Eppstein, and M.T. Goodrich, "Manipulating Weights to Improve Stress-Graph Drawings of 3-Connected Planar Graphs," *31st Int. Symp. on Graph Drawing and Network Visualization* (GD), LNCS, Vol. 14466, Springer, 141–149, 2023.

C-241. S. Fukuzawa, M.T. Goodrich, and S. Irani, "Quantum Tutte Embeddings," *31st Int. Symp. on Graph Drawing and Network Visualization* (GD), LNCS, Vol. 14466, Springer, 241–243, 2023.

C-242. O. Gila, M.T. Goodrich, and E. Ozel, "Highway Preferential Attachment Models for Geographic Routing," *16th Int. Conf. on Combinatorial Optimization and Applications* (COCOA), LNCS 14462, Springer, 56–80, 2023. **Best Paper Award**

C-243. M.T. Goodrich, R. Kitagawa, and V. Srindhar, "Dynamic Accountable Storage: An Efficient Protocol for Real-time Cloud Storage Auditing," *Int. Symp. on Algorithmic Aspects of Cloud Computing* (ALGOCLOUD), 2024.

C-244. D. Eppstein, M.T. Goodrich, and A.M. Illickan, "Drawing Planar Graphs and 1-Planar Graphs Using Cubic Bézier Curves with Bounded Curvature," *32nd Int. Symp. on Graph Drawing and Network Visualization* (GD), 39:1–39:17, 2024.

C-245. A. Chiu, A. Eldawy, and M.T. Goodrich, "Polygonally Anchored Graph Drawing," *32nd Int. Symp. on Graph Drawing and Network Visualization* (GD), 52:1–52:3, 2024.

C-246. M.T. Goodrich, R. Kitigawa, and M. Mitzenmacher, "Parallel Peeling of Invertible Bloom Lookup Tables in a Constant Number of Rounds," *Int. Conf. on Current Trends in Theory and Practice of Computer Science* (SOFSEM), 2025, accepted.

**Other Publications:**

O-1. M.T. Goodrich, "Guest Editor's Introduction," *Int. Journal of Computational Geometry & Applications*, **2**(2), 1992, 113–116.

O-2. M.T. Goodrich, "Parallel Algorithms Column 1: Models of Computation," *SIGACT News*, **24**(4), 1993, 16–21.

O-3. M.T. Goodrich, V. Mirelli, M. Orletsky, and J. Salowe, "Decision tree construction in fixed dimensions: Being global is hard but local greed is good," Technical Report TR-95-1, Johns



**Patent Owner, NTECH Properties, Inc. - Ex. 2001, p. 51**

Hopkins University, Department of Computer Science, Baltimore, MD 21218, May 1995.

O-4. R. Tamassia, P.K. Agarwal, N. Amato, D.Z. Chen, D. Dobkin, R.L.S. Drysdale, S. Fortune, M.T. Goodrich, J. Hershberger, J. O'Rourke, F.P. Preparata, J.-R. Sack, S. Suri, I.G. Tollis, J.S. Vitter, and S. Whitesides, "Strategic Directions in Computational Geometry Working Group Report," *ACM Computing Surveys*, **28A**(4), December 1996.

O-5. G.A. Gibson, J.S. Vitter, and J. Wilkes, A. Choudhary, P. Corbett, T.H. Cormen, C.S. Ellis, M.T. Goodrich, P. Highnam, D. Kotz, K. Li, R. Muntz, J. Pasquale, M. Satyanarayanan, D.E. Vengroff, "Report of the Working Group on Storage I/O Issues in Large-Scale Computing," *ACM Computing Surveys*, **28A**(4), December 1996.

O-6. T.H. Cormen and M.T. Goodrich, "A Bridging Model for Parallel Computation, Communication, and I/O," *ACM Computing Surveys*, **28A**(4), December 1996.

O-7. M.T. Goodrich, "Computer Science Issues in the National Virtual Observatory," in *Virtual Observatories of the Future*, ASP Conf. Series, vol. 225, R.J. Brunner, S.G. Djorgovski, and A.S. Szalay, eds., 329–332, 2001.

O-8. M.T. Goodrich, "Guest Editor's Foreword," *Algorithmica*, **33**(3), 271, 2002.

O-9. M.T. Goodrich, M. Shin, C.D. Straub, and R. Tamassia, "Distributed Data Authentication (System Demonstration)," *DARPA Information Survivability Conf. and Exposition*, IEEE Press, Volume 2, 58–59, 2003.

O-10. M.T. Goodrich and R. Tamassia, "Efficient and Scalable Infrastructure Support for Dynamic Coalitions," *DARPA Information Survivability Conf. and Exposition*, IEEE Press, Volume 2, 246–251, 2003.

O-11. M.T. Goodrich, "Simulating Parallel Algorithms in the MapReduce Framework with Applications to Parallel Computational Geometry," Second Workshop on Massive Data Algorithmics (MASSIVE), 2010. Available as *arXiv* preprint, 1004.4708, 2010.

O-12. D. Eppstein, M.T. Goodrich, and P. Baldi, "Privacy-Enhanced Methods for Comparing Compressed DNA Sequences," *arXiv* preprint, 1107.3593, 2011.

O-13. E. Ghosh, M.T. Goodrich, O. Ohrimenko, and R. Tamassia, "Poster: Zero-Knowledge Authenticated Order Queries and Applications," *IEEE Symp. on Security and Privacy*, 2015. (See also https://eprint.iacr.org/2015/283.)

O-14. F. Bayatbabolghani, M. Blanton, M. Aliasgari, and M.T. Goodrich, "Poster: Secure Computations of Trigonometric and Inverse Trigonometric Functions," *IEEE Symp. on Security and Privacy*, 2017. (See also https://fattaneh88.github.io/fbayatba/Proposal-sine-arctangent.pdf.)

O-15. F. Bayatbabolghani, M. Blanton, M. Aliasgari, and M.T. Goodrich, "Secure Fingerprint Alignment and Matching Protocols," *arXiv* preprint, 1702.03379, 2017.

O-16. M.Z. Liang, M.T. Goodrich, and S. Zhao, "On the Optical Accuracy of the Salvator Mundi," *arXiv* preprint, 1912.03416, 2019.

O-17. A. Chiu, M. Ghosh, R. Ahmed, K.-S. Jun, S. Kobourov, and M.T. Goodrich, "Graph Sparsifications using Neural Network Assisted Monte Carlo Tree Search," *arXiv* preprint, 2311.10316, 2023.

**News Releases, Reviews, Interviews, and Media Mentions:**

N-1. H. Masum, "Review of *Data Structures and Algorithms in Java* (2nd ed)," *ACM SIGACT News*, **32**(1), 3–5, 2001.

N-2. H. Masum, "Book Review: *Algorithm Design: Foundations, Analysis, and Examples*," *ACM SIGACT News*, **35**(2), 14–16, 2004.



**Patent Owner, NTECH Properties, Inc. - Ex. 2001, p. 52**

N-3. "Domain Integrity: Brown Licenses Internet ID Verification Technology to Startup Firm," *Brown Univ. News Service*, https://www.brown.edu/Administration/News_Bureau/2005-06/05-031.html, September 20, 2005.

N-4. "Computer scientist elected to Royal Danish Academy of Sciences & Letters," *UCI News*, https://news.uci.edu/2018/04/24/uci-computer-scientist-elected-to-royal-danish-academy-of-sciences-letters/, April 24, 2018.

N-5. J. Yang, "Invertible Bloom Lookup Table," *CodeChain*, https://medium.com/codechain/invertible-bloom-lookup-table-37600927cfbe, May 6, 2018.

N-6. D. Trapp, "What Are Invertible Bloom Lookup Tables?," *Dash News*, https://dashnews.org/what-are-invertible-bloom-lookup-tables/, February 26, 2019.

N-7. "A virtual version of da Vinci's mystery glass orb has helped explain its weirdness," *MIT Technology Review*, https://www.technologyreview.com/2020/01/02/102309/a-virtual-version-of-da-vincis-mystery-glass-orb-has-helped-explain-its-weirdness/, January 2, 2020.

N-8. C. Kuesel, "Scientists may have solved the mystery behind the glass orb in 'Salvator Mundi,'" *Artsy*, https://www.artsy.net/article/artsy-editorial-scientists-solved-mystery-glass-orb-salvator-mundi, January 3, 2020.

N-9. S. Pappas, "Mystery of Orb in a Record-Breaking Leonardo Da Vinci Painting Deepens," *LiveScience*, https://www.livescience.com/da-vinci-light-orb-mystery.html, January 13, 2020.

N-10. S. Murray, "Computer Scientists Make a Splash in Art World Analyzing the *Salvator Mundi*," UCI ICS In The News, https://www.ics.uci.edu/community/news/view_news?id=1706, February 11, 2020.

N-11. A. Gorale, "Bitcoin in Bloom: How IBLTs Allow Bitcoin to Scale," *CCN*, https://www.ccn.com/bitcoin-in-bloom-how-iblts-allow-bitcoin-scale/, March 4, 2021.

N-12. R. Miller, "Mike Goodrich's New zyVersion: Bringing Interactivity to Algorithm Design and Application Textbook," *zyBooks*, https://www.zybooks.com/mike-goodrichs-new-zyversion-bringing-interactivity-to-algorithm-design-and-application-textbook/, October 3, 2022.

N-13. S. Murray, "ICS Researchers Receive Best Paper Award at Algorithms and Data Structures Symposium," UCI ICS In The News, https://www.ics.uci.edu/community/news/view_news?id=2351, July 18, 2023.

**PROFESSIONAL SERVICE**

*Guest Editor:*

*Int. Journal of Computational Geometry & Applications*, **2**(2), 1992
*Journal of Computer & System Sciences*, **52**(1), 1996
*Computational Geometry: Theory and Applications*, **12(1–2)**, 1999.
*Algorithmica*, **33**(3), 2002.

*Editorial Board Membership:*

*Computational Geometry: Theory and Applications*, 2006–2015
*Journal of Computer & System Sciences*, 1994–2011
*Journal of Graph Algorithms and Applications*, 1996–2011
*Int. Journal of Computational Geometry & Applications*, 1993–2010
*Information Processing Letters*, 1995–1997

*Journal Advisory Board Membership:*



**Patent Owner, NTECH Properties, Inc. - Ex. 2001, p. 53**

*Int. Journal of Computational Geometry & Applications*, 2010–
*Journal of Graph Algorithms and Applications*, 2011–

*Program Committee Service:*

7th ACM Symp. on Computational Geometry (SoCG), 1991
1991 Workshop on Algorithms and Data Structures (WADS)
8th ACM Symp. on Computational Geometry (SoCG), 1992
25th ACM Symp. on Theory of Computing (STOC), 1993
*Chair*, 26th ACM Symp. on Theory of Computing (STOC), 1994
11th ACM Symp. on Computational Geometry (SoCG), 1995
DAGS '95 Conf. on Electronic Publishing and the Information Superhighway
1996 SIAM Discrete Mathematics Conference
1997 Workshop on Algorithms and Data Structures (WADS)
Int. Symp. on Graph Drawing (GD), 1997
1999 Workshop on Algorithms and Data Structures (WADS)
*Co-chair*, Workshop on Algorithm Engineering and Experimentation (ALENEX), 1999
Int. Symp. on Graph Drawing (GD), 2000
2000 Workshop on Algorithm Engineering (WAE)
41st IEEE Symp. on Foundations of Computer Science (FOCS), 2000
2001 Workshop on Algorithms and Data Structures (WADS)
Int. Symp. on Graph Drawing (GD), 2001
Workshop on Algorithm Engineering and Experimentation (ALENEX), 2002
18th ACM Symp. on Computational Geometry (SoCG), 2002
13th ACM-SIAM Symp. on Discrete Algorithms (SODA), 2002
*Co-Chair*, Graph Drawing 2002
Int. Symp. on Graph Drawing (GD), 2003
16th ACM-SIAM Symp. on Discrete Algorithms (SODA), 2005
32nd Int. Colloq. on Automata, Languages and Programming (ICALP), 2005
12th Int. Computing and Combinatorics Conference (COCOON), 2006
13th ACM Conf. on Computer and Communication Security (CCS), 2006
15th European Symp. on Algorithms (ESA), 2007
5th Int. Conference on Applied Cryptography and Network Security (ACNS), 2007
21st IEEE Int. Parallel & Distributed Processing Symp. (IPDPS), 2007
19th ACM Symp. on Parallelism in Algorithms and Architectures (SPAA), 2007
5th Workshop on Algorithms and Models for the Web-Graph (WAW), 2007
7th Int. Workshop on Experimental Algorithms (WEA), 2008
Second Int. Frontiers of Algorithmics Workshop (FAW), 2008
16th ACM SIGSPATIAL Int. Symp. on Adv. in Geographic Information Systems (GIS), 2008
17th ACM SIGSPATIAL Int. Symp. on Adv. in Geographic Information Systems (GIS), 2009
31st IEEE Symp. on Security and Privacy (S&P), 2010
18th Int. Symp. on Graph Drawing (GD), 2010
2011 Workshop on Analytic Algorithmics and Combinatorics (ANALCO)
8th Workshop on Algorithms and Models for the Web Graph (WAW), 2011
19th Int. Symp. on Graph Drawing (GD), 2011
24th ACM Symp. on Parallelism in Algorithms and Architectures (SPAA), 2012
20th European Symp. on Algorithms (ESA), 2012
2013 IEEE Int. Conf. on Big Data (BigData), 2013
30th IEEE Int. Conf. on Data Engineering (ICDE), 2014
21st ACM Conf. on Computer and Communication Security (CCS), 2014
Symp. on Algorithms and Data Structures (WADS), 2015
ACM Cloud Computing Security Workshop (CCSW), 2015
Int. Symp. on Graph Drawing (GD), 2015



**Patent Owner, NTECH Properties, Inc. - Ex. 2001, p. 54**

*co-chair*, 2016 Workshop on Algorithm Engineering and Experiments (ALENEX)
2016 Workshop on Massive Data Algorithmics (MASSIVE)
2016 Int. Symp. on Algorithms and Computation (ISAAC)
29th ACM Symp. on Parallelism in Algorithms and Architectures (SPAA), 2017
25th ACM SIGSPATIAL Int. Conf. on Adv. in Geographic Information Systems (GIS), 2017
26th European Symp. on Algorithms (ESA), 2018
26th ACM SIGSPATIAL Int. Conf. on Adv. in Geographic Information Systems (GIS), 2018
2nd SIAM Symp. on Simplicity in Algorithms (SOSA), 2019
ACM SIGSPATIAL Int. Workshop on Spatial Gems, 2019
2021 SIAM Symp. on Applied Computational & Discrete Algorithms (ACDA)
2023 SIAM Symp. on Algorithm Engineering and Experimentation (ALENEX)
35th ACM Symp. on Parallelism in Algorithms and Architectures (SPAA), 2023
7th SIAM Symp. on Simplicity in Algorithms (SOSA), 2024

*Conference/Workshop Committee Service:*

Conference chair, 12th ACM Symp. on Computational Geometry, 1996
Organizer, 1st CGC Workshop on Computational Geometry, 1996
Co-chair, 1999 Dagstuhl Workshop on Computational Geometry, 1999
Conference chair, Graph Drawing, 2002
Co-organizer, Hawaiian Workshop on Parallel Algorithms, 2017, 2019
Member, Symp. on Theory of Computing (STOC) Test of Time Award Committee, 2024

*Steering Committee and Executive Committee Service:*

Member at large, ACM SIG on Algorithms & Comp. Theory (SIGACT) Exec. Comm., 1993–97
Member, Exec. comm. for 1996 Federated Computing Research Conference (FCRC)
co-Founder and member, Steering Comm. for Workshop on Algorithm Engineering and Experimentation (ALENEX), 1999–2017 (chair, 2014–16)
co-Chair, Steering Comm. for ACM Symp. on Computational Geometry, 1999–2001
Member, Steering Comm. for Graph Drawing Conference, 2000–03, 2014–16
Conference Chair, ACM SIG on Algorithms & Comp. Theory (SIGACT), 2005–09

*Center and Institute Affiliations:*

Algorithms, Combinatorics and Optimization Center, UCI
Center for Algorithms and Theory of Computation, UCI
Center for Embedded and Cyber-physical Systems, UCI
Center for Machine Learning and Intelligent Systems, UCI
The Institute for Virtual Environments and Computer Games (IVECG), UCI
Secure Computing & Networking Center, UCI

*Postdoctoral Fellows:*

1. Timothy Chan, Johns Hopkins, 1996. (Now at Univ. of Illinois)
2. Gill Barequet, Johns Hopkins, 1996-98. (Now at Technion)
3. Pawel Gajer, Johns Hopkins, 2000. (Now at Univ. of Maryland)
4. Amitabh Chaudhary, UC-Irvine, 2002-2004. (Now at U. Chicago)
5. Amitabha Bagchi, UC-Irvine, 2002-2004. (Now at IIT-Dehli)
6. Martin Nöllenburg, UC-Irvine, 2010, mentored jointly with David Eppstein. (Now at TU Wien)
7. Maarten Löffler, UC-Irvine, 2010-2011, mentored jointly with David Eppstein. (Now at Utrecht University)
8. Md. Jawaherul Alam, UC-Irvine, 2015-16. (Now at Amazon)
9. Giordano Da Lozzo, UC-Irvine, 2016-2017, mentored jointly with David Eppstein. (Now at "Roma Tre" University)



**Patent Owner, NTECH Properties, Inc. - Ex. 2001, p. 55**

*Ph.D. Students:*

1. Mujtaba Ghouse, "Randomized Parallel Computational Geometry in Theory and Practice," Johns Hopkins Univ., May 1993.
2. Paul Tanenbaum, "On Geometric Representations of Partially Ordered Sets," Johns Hopkins Univ., May 1995 (co-advised with Edward Scheinerman).
3. Mark Orletsky, "Practical Methods for Geometric Searching Problems with Experimental Validation," Johns Hopkins Univ., May 1996.
4. Kumar Ramaiyer, "Geometric Data Structures and Applications," Johns Hopkins Univ., Aug. 1996.
5. Christian Duncan, "Balanced Aspect Ratio Trees," Johns Hopkins Univ., Aug. 1999.
6. Christopher Wagner, "Graph Visualization and Network Routing," Johns Hopkins Univ., Oct. 1999 (co-advised with Prof. Lenore Cowen).
7. Stephen Kobourov, "Algorithms for Drawing Large Graphs," Johns Hopkins Univ., May 2000.
8. Amitabha Bagchi, "Efficient Strategies for Topics in Internet Algorithmics," Johns Hopkins Univ., Oct. 2002.
9. Amitabh Chaudhary, "Applied Spatial Data Structures for Large Data Sets," Johns Hopkins Univ., Oct. 2002.
10. Breno De Medeiros, "New Cryptographic Primitives with Applications to Information Privacy and Corporate Confidentiality," Johns Hopkins Univ., May 2004 (co-advised with Giuseppe Ateniese).
11. "Jeremy" Yu Meng, "Confluent Graph Drawing," UC-Irvine, June 2006.
12. Jonathan Zheng Sun, "Algorithms for Hierarchical Structures, with Applications to Security and Geometry," UC-Irvine, Aug. 2006.
13. Nodari Sitchinava, "Parallel External Memory Model—A Parallel Model for Multi-core Architectures," UC-Irvine, Sep. 2009.
14. Darren Strash, "Algorithms for Sparse Geometric Graphs and Social Networks," UC-Irvine, May 2011 (co-advised with with David Eppstein).
15. Lowell Trott, "Geometric Algorithms for Social Network Analysis," UC-Irvine, May 2013.
16. Joseph Simons, "New Dynamics in Geometric Data Structures," UC-Irvine, May 2014.
17. Pawel Pszona, "Practical Algorithms for Sparse Graphs," UC-Irvine, May 2014.
18. William E. Devanny, "An Assortment of Sorts: Three Modern Variations on the Classic Sorting Problem," UC-Irvine, July 2017 (co-advised with David Eppstein).
19. Siddharth Gupta, "Topological Algorithms for Geographic and Geometric Graphs," UC-Irvine, Aug. 2018 (co-advised with with David Eppstein).
20. Timothy Johnson, "Graph Drawing Representations and Metrics with Applications," UC-Irvine, Aug. 2018.
21. Juan Besa, "Optimization Problems in Directed Graph Visualization," UC-Irvine, Aug. 2019.
22. Nil Mamano Grande, "New Applications of the Nearest-Neighbor Chain Algorithm," UC-Irvine, Sep. 2019 (co-advised with David Eppstein).
23. Pedro Matias, "Exact Learning of Sequences from Queries and Trackers," UC-Irvine, May 2021
24. Martha Osegueda, "Constructing, Counting and Matching Combinatorial and Geometric Shapes," UC-Irvine, May 2022
25. Ramtin Afshar, "Exact Learning of Graphs Using Queries," UC-Irvine, Feb. 2023
26. Evrim Ozel, "Efficient Algorithms for Road Networks and Noisy Sorting: an Experimental and Theoretical Perspective," UC-Irvine, May 2024



**Patent Owner, NTECH Properties, Inc. - Ex. 2001, p. 56**

*Ph.D. Committee Service:*

| | | |
|---|---|---|
| John Augustine | UC-Irvine | Advancement to candidacy, September 2003 |
| Nikos Triandopoulos | Brown U. | Thesis prelim., February 2004 |
| Einar Mykletun | UC-Irvine | Advancement to candidacy, March 2004 |
| Kartic Subr | UC-Irvine | Advancement to candidacy, September 2004 |
| S. Joshua Swamidass | UC-Irvine | Advancement to candidacy, April 2005 |
| Jeong Hyun Yi | UC-Irvine | Thesis defense, August, 2005 |
| Nodari Sitchinava | UC-Irvine | Advancement to candidacy, chair, December 2005 |
| John Augustine | UC-Irvine | Thesis defense, July 2006 |
| Maithili Narasimha | UC-Irvine | Thesis defense, August, 2006 |
| Josiah Carlson | UC-Irvine | Advancement to candidacy, August 2006 |
| Xiaomin Liu | UC-Irvine | Advancement to candidacy, September 2006 |
| Gabor Madl | UC-Irvine | Advancement to candidacy, September 2006 |
| Nikos Triandopoulos | Brown U. | Thesis defense, September 2006 |
| Rabia Nuray-Turan | UC-Irvine | Advancement to candidacy, May 2007 |
| S. Joshua Swamidass | UC-Irvine | Thesis defense, June 2007 |
| Michael Sirivianos | UC-Irvine | Advancement to candidacy, June 2007 |
| Kevin Wortman | UC-Irvine | Advancement to candidacy, August 2007 |
| Di Ma | UC-Irvine | Advancement to candidacy, December 2007 |
| Josiah Carlson | UC-Irvine | Thesis defense, December 2007 |
| Michael Nelson | UC-Irvine | Advancement to candidacy, chair, March 2008 |
| Minas Gjoka | UC-Irvine | Advancement to candidacy, June 2008 |
| Sara Javanmardi | UC-Irvine | Advancement to candidacy, June 2008 |
| Ali Zandi | UC-Irvine | Advancement to candidacy, September 2008 |
| Jihye Kim | UC-Irvine | Thesis defense, September 2008 |
| Darren Strash | UC-Irvine | Advancement to candidacy, December 2008 |
| Kevin Wortman | UC-Irvine | Topic defense, January 2009 |
| Nodari Sitchinava | UC-Irvine | Topic defense, chair, June 2009 |
| Fabio Soldo | UC-Irvine | Advancement to candidacy, July 2009 |
| Emil De Cristofaro | UC-Irvine | Advancement to candidacy, July 2009 |
| Di Ma | UC-Irvine | Thesis defense, August 2009 |
| Yanbin Lu | UC-Irvine | Advancement to candidacy, December 2009 |
| Anh Le | UC-Irvine | Advancement to candidacy, April 2010 |
| Lowell Trott | UC-Irvine | Advancement to candidacy, June 2010 |
| Xiaomin Liu | UC-Irvine | Thesis defense, August 2010 |
| Josh Olsen | UC-Irvine | Advancement to candidacy, September 2010 |
| Yasser Altowim | UC-Irvine | Advancement to candidacy, December 2010 |
| Angela Wong | UC-Irvine | Advancement to candidacy, May 2011 |
| Joshua Hill | UC-Irvine | Advancement to candidacy, September 2011 |
| Alex Abatzoglou | UC-Irvine | Advancement to candidacy, September 2011 |
| Michael Wolfe | UC-Irvine | Masters Thesis defense, October 2011 |
| Olya Ohrimenko | Brown Univ. | PhD Thesis proposal, October 2011 |
| Yanbin Lu | UC-Irvine | PhD Thesis defense, November 2011 |
| Chun Meng | UC-Irvine | Advancement to candidacy, December 2011 |
| Abinesh Ramakrishnan | UC-Irvine | Advancement to candidacy, March 2012 |
| Pegah Sattari | UC-Irvine | PhD Thesis defense, April 2012 |
| Michael Bannister | UC-Irvine | PhD Thesis defense, May 2015 |



**Patent Owner, NTECH Properties, Inc. - Ex. 2001, p. 57**

| | | |
|---|---|---|
| Yingyi Bu | UC-Irvine | PhD Thesis defense, August 2015 |
| Jenny Lam | UC-Irvine | PhD Thesis defense, November 2015 |
| Timothy Johnson | UC-Irvine | Advancement to candidacy, chair, June 2016 |
| Jiayu Xu | UC-Irvine | Advancement to candidacy, November 2016 |
| Sky Faber | UC-Irvine | PhD Thesis defense, November 2016 |
| Juan Jose Besa Vial | UC-Irvine | Advancement to candidacy, chair, March 2017 |
| William Devanny | UC-Irvine | PhD Thesis defense, co-chair, July 2017 |
| Ingo van Duijn | Aarhus Univ. | PhD Thesis defense, September 2017 |
| Siddharth Gupta | UC-Irvine | Advancement to candidacy, January 2018 |
| Boyang Wei | UC-Irvine | PhD Thesis defense, August 2018 |
| Timothy Johnson | UC-Irvine | PhD Thesis defense, chair, August 2018 |
| Siddharth Gupta | UC-Irvine | PhD Thesis defense, August 2018 |
| Pedro Matias | UC-Irvine | Advancement to candidacy, chair, May 2019 |
| Juan Jose Besa Vial | UC-Irvine | PhD Thesis defense, chair, August 2019 |
| Sameera Chayyur | UC-Irvine | Advancement to candidacy, September 2019 |
| Nil Mamano Grande | UC-Irvine | PhD Thesis defense, co-chair, September 2019 |
| Yihan Sun | CMU | PhD Thesis defense, October 2019 |
| Martha Osegueda | UC-Irvine | Advancement to candidacy, chair, June 2020 |
| Tatiana Bradley | UC-Irvine | PhD Thesis defense, December 2020 |
| Julius Ceasar Aguma | UC-Irvine | Advancement to candidacy, December 2020 |
| Ramtin Afshar | UC-Irvine | Advancement to candidacy, chair, March 2021 |
| Pedro Matias | UC-Irvine | PhD Thesis defense, chair, May 2021 |
| Elham Havvaei | UC-Irvine | PhD Thesis defense, May 2021 |
| Daniel Frishberg | UC-Irvine | Advancement to candidacy, May 2021 |
| Hadi Khodabandeh | UC-Irvine | Advancement to candidacy, July 2021 |
| Sameera Ghayyur | UC-Irvine | PhD topic defense, February 2022 |
| Evrim Ozel | UC-Irvine | Advancement to candidacy, chair, May 2022 |
| Rohith Gangam | UC-Irvine | Advancement to candidacy, May 2022 |
| Martha Osegueda | UC-Irvine | PhD Thesis defense, chair, May 2022 |
| Yanqi Gu | UC-Irvine | Advancement to candidacy, June 2022 |
| Sameera Ghayyur | UC-Irvine | PhD Thesis defense, August 2022 |
| Rasmus K. Petersen | Aarhus Univ. | PhD Thesis defense, Sept. 2022 |
| Zihan Yu | UC-Irvine | Advancement to candidacy, Nov. 2022 |
| Ramtin Afshar | UC-Irvine | PhD Thesis defense, chair, Feb. 2023 |
| Shanshan Han | UC-Irvine | Advancement to candidacy, Feb. 2023 |
| Zhanhang (Marco) Liang | UC-Irvine | Advancement to candidacy, Mar. 2023 |
| Shion Fukuzawa | UC-Irvine | Advancement to candidacy, co-chair, Mar. 2023 |
| Ryuto Kitagawa | UC-Irvine | Advancement to candidacy, chair, May 2024 |
| Ofek Gila | UC-Irvine | Advancement to candidacy, chair, May 2024 |
| Po-Chu Hsu | UC-Irvine | Advancement to candidacy, May 2024 |
| Yanqi Gu | UC-Irvine | PhD Thesis defense, May 2024 |
| Evrim Ozel | UC-Irvine | PhD Thesis defense, chair, May 2024 |
| Hadi Khodabandeh | UC-Irvine | PhD Thesis defense, June 2024 |
| Alfred (Songyu) Liu | UC-Irvine | Advancement to candidacy, chair, Nov. 2024 |
| Parnian Shahkar | UC-Irvine | Advancement to candidacy, Nov. 2024 |
| Stelios Stavroukakis | UC-Irvine | Advancement to candidacy, Nov. 2024 |

*University Service:*



**Patent Owner, NTECH Properties, Inc. - Ex. 2001, p. 58**

Ph.D. Requirements Committee, Dept. of Computer Science, chair: 1987–89
Graduate Admissions Committee, Dept. of Computer Science, 1991–1993 (chair: 1992)
Faculty Recruiting Committee, Dept. of Computer Science, 1993,95,96 (chair: 1996)
Steering Committee, Whiting School of Engineering, 1990–93 (chair, 1993)
Johns Hopkins Homewood Academic Computing Oversight Committee, 1990–93
Curriculum Committee, Whiting School of Engineering, 1994–96
Strategic Planning Committee, Whiting School of Engineering, 1999–00
Graduate Policy Committee, UCI Dept. of Information & Computer Science (ICS), 2001–02
Faculty Search Committee in Cryptography, UCI Dept. of ICS, 2001–03
School of Info. and Computer Science Executive Committee, 2002–04
UCI Committee on Educational Policy (CEP), 2002–03, 2004–06
UCI Change of Major Criteria Committee, 2002–03
UCI CEP Policy Subcommittee, 2002–2003
Distinguished Faculty Search Committee, Bren School of ICS, 2004–11 (chair, 2007–08)
Equity Advisor, Bren School of ICS, 2005–09
Dean's Advisory Council, Bren School of ICS, 2007–13
Associate Dean for Faculty Development, Bren School of ICS, 2006–12
Chair, Department of Computer Science, Bren School of ICS, 2012–13
Master of Computer Science Development Committee, Bren School of ICS, 2013–16
Stragic Planning Committee, Dept. of Computer Science, Bren School of ICS, 2015–16
Executive Committee, Bren School of ICS, 2017–18
UC-Irvine Senate Committee on Scholarly Honors & Awards, 2017–20
UC-Irvine Special Research Program Review Committee for CalIT2, 2018–19
UC-Irvine Year of Scholarly Values Advisory Committee, 2024–
Master of Computer Science Steering/Admissions Comm., Bren School of ICS, 2016–22, 2024–

*Courses Taught and Developed:*

Advanced Parallel Computing (developed and taught at Johns Hopkins)
Cyber-Puzzlers (designed and taught at UCI)
Computer Literacy (taught at Purdue, developed at Johns Hopkins)
Computer Programming for Scientists and Engineers (taught at Purdue)
Computer Security Algorithms (developed and taught at UCI)
Computational Models (revised and taught at Johns Hopkins)
Computational Geometry (revised and taught at Johns Hopkins and UCI)
Compiler Theory and Design (revised and taught at Johns Hopkins)
Computer Graphics (taught at Johns Hopkins)
Cyber-Fraud Detection and Prevention (designed and taught at UCI)
Data Structures (revised and taught at Johns Hopkins and UCI)
Graph Algorithms (revised and taught at UCI)
Formal Languages and Automata Theory (revised and taught at UCI)
Fundamentals of Algorithms with Applications (revised and taught at UCI)
Introduction to Algorithms (developed and taught at Johns Hopkins and UCI)
Internet Algorithmics (developed and taught at Johns Hopkins, Brown, and UCI)
Design and Analysis of Algorithms (revised and taught at Johns Hopkins and UCI)
Parallel Algorithms (developed and taught at Johns Hopkins and Univ. of Illinois)
Project in Algorithms and Data Structures (revised and taught at UCI)
Text Processing and Pattern Matching (developed and taught at UCI)

*Consulting:*



**Patent Owner, NTECH Properties, Inc. - Ex. 2001, p. 59**

The National Science Foundation, proposal panel member, 1990–
Army Research Laboratory, Fort Belvior, 1995
Battelle Research Triangle, Columbus Division, 1996
AT&T, 1998
Univ. of Miami, 1999
Algomagic Technologies, Inc., 2000–2005
Brown University, 2000–2007
Purdue University, 2002
APAC Security, Inc., 2005
Walt Disney Animation Studios, 2009
Technical expert and expert witness, 2012–
3M, 2015

**GRANTS AND CONTRACTS**

1. PI, "Research Initiation Award: Parallel and Sequential Computational Geometry," National Science Foundation (NSF Grant CCR-8810568), $32,914, 1988–90.
2. co-PI, "Paradigms for Parallel Algorithm Design," NSF and DARPA (as NSF Grant CCR-8908092), $523,837, 1989–93 (with S.R. Kosaraju (PI), S. Kasif, and G. Sullivan).
3. PI, "Parallel Computation and Computational Geometry," NSF (Grant CCR-9003299), $67,436, 1990–93.
4. co-PI, "A Facility for Experimental Validation," NSF (Grant CDA-9015667), $1,476,147, 1991–96 (with G. Masson (PI), J. Johnstone, S. Kasif, S.R. Kosaraju, S. Salzberg, S. Smith, G. Sullivan, L. Wolff, and A. Zwarico).
5. PI, "Parallel Network Algorithms for Cell Suppression," The Bureau of the Census (JSA 91-23), $14,998 1991–92.
6. PI, "A Geometric Framework for the Exploration & Analysis of Astrophysical Data," NSF (Grant IRI-9116843), $535,553, 1991–96 (with S. Salzberg and H. Ford (from Physics and Astronomy Dept.)).
7. PI, "Research Experiences for Undergraduates supplement to IRI-9116843," NSF, $4,000, 1993–94 (with S. Salzberg and H. Ford).
8. PI, "Constructing, Maintaining, and Searching Geometric Structures," NSF (Grant CCR-9300079), $134,976, 1993–96.
9. co-PI, "Robust and Applicable Geometric Computing," Army Research Office (ARO MURI Grant DAAH04-96-1-0013), $4,500,000, 1996–2000 (with F. Preparata (PI, Brown U.), R. Tamassia (Brown U.), S. Rao Kosaraju, J. Vitter (Duke U.), and P. Agarwal (Duke U.)). Subaward size: $1,466,640.
10. PI, "Application-Motivated Geometric Algorithm Design," NSF (Grant CCR-9625289), $107,389, 1996-98.
11. co-PI, "vBNS Connectivity for the Johns Hopkins University," NSF, $350,000, 1997–99 (with T.O. Poehler (PI), D.J. Binko, J.G. Neal, and A.S. Szalay).
12. co-PI, "Product Donation, Technology for Education Program," Intel Corporation, $480,071, 1997–2001 (with T.O. Poehler (PI), J.H. Anderson, A.S. Szalay, and M. Robbins).
13. co-PI, "A Networked Computing Environment for the Manipulation & Visualization of Geometric Data" (Research Infrastructure), NSF, $1,638,785, 1997–2003 (with L.B. Wolff (PI), Y. Amir, S.R. Kosaraju, S. Kumar, R. Tamassia (Brown U.), R.H. Taylor, and D. Yarowsky).
14. PI, "Geometric Algorithm Design and Implementation," NSF, Grant CCR-9732300, $224,982, 1998–2002.



**Patent Owner, NTECH Properties, Inc. - Ex. 2001, p. 60**

15. PI, "Certification Management Infrastructure – Certificate Revocation," $52,023, 1998, NSA LUCITE grant.
16. PI, "Software Engineering Data Loading, Analysis, and Reporting," $41,614, 1998, NSA LUCITE grant.
17. PI, "Establishing a LUCITE Collaboration Environment," $10,018, 1998, NSA LUCITE grant.
18. PI, "In Support of a Secure Multilingual Collabortive Computing Environment," $51,471, 1999-2000, NSA LUCITE grant.
19. PI, "Accessing Large Distributed Archives in Astronomy and Particle Physics," $199,981. subcontract to UCI from Johns Hopkins Univ. on NSF Grant PHY-9980044 (total budget, $2,500,000), 1999–2004.
20. PI, "Efficient and Scalable Infrastructure Support for Dynamic Coalitions," $1,495,000, DARPA Grant F30602-00-2-0509, 2000-2003 (with Robert Cohen and Roberto Tamassia), including $227,893 subaward to UCI (with Gene Tsudik).
21. PI, "Graph Visualization and Geometric Algorithm Design," $400,000, NSF Grant CCR-0098068, 2001-2004 (with Roberto Tamssia).
22. PI, "Collaborative Research: Teaching Data Structures to the Millennium Generation," $125,00, NSF Grant DUE-0231467, 2003–2005.
23. PI, "Collaborative Research: An Algorithmic Approach to Cyber-Security," $100,000, NSF Grant CCR-0311720, 2003–2006.
24. PI, "The OptIPuter," $900,000, subcontract from UCSD on NSF ITR grant CCR-0225642 (total budget, $13.5 million), 2002–2007 (with Padhraic Smyth and Kane Kim).
25. PI, "ITR: Algorithms for the Technology of Trust," $300,000, NSF Grant CCR-0312760, 2003–2009.
26. co-PI, "SDCI Data New: Trust Management for Open Collaborative Information Repositories: The CalSWIM Cyberinfrastructure," NSF grant OCI-0724806, $1,103,590, 2007–2012.
27. co-PI, "Support for Machine Learning Techniques for Cyber-Fraud Detection," Experian Corporation, $200,000 gift, 2008.
28. PI, "IPS: Collaborative Research: Privacy Management, Measurement, and Visualization in Distributed Environments," NSF Grant IIS-0713046, $224,851, 2007–2009.
29. PI, "Collaborative Research: Algorithms for Graphs on Surfaces," $400,000, NSF Grant CCR-0830403, 2008–2011.
30. PI, "ROA Supplement: IPS: Collaborative Research: Privacy Management, Measurement, and Visualization in Distributed Environments," NSF Grant IIS-0847968, $25,000, 2008–2009.
31. co-investigator, "Scalable Methods for the Analysis of Network-Based Data," Office of Naval Research: Multidisciplinary University Research Initiative (MURI) Award, number N00014-08-1-1015, $529,152, 2008–2014.
32. PI, "EAGER: Usable Location Privacy for Mobile Devices," NSF Grant 0953071, $300,000, 2009–2011.
33. PI, "TC:Large:Collaborative Research: Towards Trustworthy Interactions in the Cloud," NSF Grant 1011840, $500,000, 2010-2015.
34. PI, "TWC: Medium: Collaborative: Privacy-Preserving Distributed Storage and Computation," NSF Grant 1228639, $390,738, 2012-2018.
35. PI, "Support for Research on Geometric Motion Planning," 3M Corporation, $40,000 gift, 2014.
36. PI, "A4V: Automated Analysis of Algorithm Attack Vulnerabilities," subcontract 10036982-UCI from University of Utah for DARPA agreement no. AFRL FA8750-15-2-0092, $980,000,



**Patent Owner, NTECH Properties, Inc. - Ex. 2001, p. 61**

2015–2019.

37. PI, "TWC: Small: Collaborative: Practical Security Protocols via Advanced Data Structures," NSF Grant 1526631, $166,638, 2015–2018.
38. PI, "NSF-BSF: AF: Small: Geometric Realizations and Evolving Data," NSF Grant 1815073, $474,392, 2018–2022.
39. PI, "Collaborative Research: AF: Medium: Algorithms for Geometric Graphs," NSF Grant 2212129, $799,800, 2022–2026.

**SELECTED INVITED TALKS (RECENT YEARS ONLY)**

- "Probabilistic Packet Marking for Large-Scale IP Traceback," Purdue Univ., 2003
- "Algorithms for Data Authentication," Harvey Mudd College, 2003
- "Efficient Tree-Based Revocation in Groups of Low-State Devices," Univ. of Arizona, 2004
- "Leap-Frog Packet Linking and Diverse Key Distributions for Improved Integrity in Network Broadcasts," Southern California Security and Cryptography Workshop, 2005
- "Is Your Business Privacy Protected?," NEXT Connections, 2005
- "Distributed Peer-to-peer Data Structures," Harvard Univ., 2006
- "Balancing Life with an Academic Research Career," Grace Hopper Conference, 2006
- "Computer Security in the Large," Univ. Texas, San Antonio, 2006
- "Inspirations in Parallelism and Computational Geometry," Brown Univ., 2006
- "Efficiency and Security Issues for Distributed Data Structures," Computer Science Distinguished Lecture Series, Johns Hopkins Univ., 2006
- "Efficiency and Security Issues for Distributed Data Structures," UCLA, 2006
- "Efficiency and Security Issues for Distributed Data Structures," Edison Distinguished Lecturer Series, Univ. of Notre Dame, 2006
- "Efficiency and Security Issues for Distributed Data Structures," Computer Science Distinguished Lecturer Series, Texas A & M Univ., 2006
- "Algorithms for Secure Computing and Searching with Applications to Medical Informatics," Purdue Univ., 2006
- "Blood on the Computer: How Algorithms for Testing Blood Samples can be Used for DNA Sequencing, Wireless Broadcasting, and Network Security," Univ. of Southern California, 2007
- "Blood on the Computer: How Algorithms for Testing Blood Samples can be Used for DNA Sequencing, Wireless Broadcasting, and Network Security," Univ. California, San Diego, 2007
- "Blood on the Computer: How Algorithms for Testing Blood Samples can be Used for DNA Sequencing, Wireless Broadcasting, and Network Security," Univ. Minnesota, 2007
- "Blood on the Database: How Algorithms for Testing Blood Samples can be Used for Database Integrity," Invited Keynote, 21st Annual IFIP WG 11.3 Working Conference on Data and Applications Security (DBSec), 2007
- "Space-Efficient Straggler Identification," ALCOM Seminar, Univ. of Aarhus, 2007
- "Blood on the Computer: How Algorithms for Testing Blood Samples can be used in Modern Applications," ALCOM Seminar, Univ. of Aarhus, 2007
- "Studying Road Networks Through an Algorithmic Lens," ALCOM Seminar, Univ. of Aarhus, 2008
- "Studying Geometric Graph Properties of Road Networks Through an Algorithmic Lens," Int. Workshop on Computing: from Theory to Practice, 2009



**Patent Owner, NTECH Properties, Inc. - Ex. 2001, p. 62**

- "Randomized Shellsort: A Simple Oblivious Sorting Algorithm," Distinguished Lecture Series, Department of Computer Science, Brown University, 2009
- "Simulating Parallel Algorithms in the MapReduce Framework with Applications to Parallel Computational Geometry," MASSIVE 2010
- "Data Cloning Attacks for Nearest-Neighbor Searching based on Retroactive Data Structures," Department of Computer Science, UCSB, 2011
- "Turning Privacy Leaks into Floods: Surreptitious Discovery of Social Network Friendships and Other Sensitve Binary Attribute Vectors," Department of Computer Science Distinguished Lecturer Series, Univ. of Illinois, Chicago, 2011
- "Turning Privacy Leaks into Floods: Surreptitious Discovery of Social Network Friendships and Other Sensitve Binary Attribute Vectors," Department of Computer Science, Purdue Univ., 2011
- "Spin-the-bottle Sort and Annealing Sort: Oblivious Sorting via Round-robin Random Comparisons," Department of Computer Science, Brown Univ., 2012
- "Using Data-Oblivious Algorithms for Private Cloud Storage Access," Qatar University, 2013
- "Using Data-Oblivious Algorithms for Private Cloud Storage Access," Department of Computer Science and Engineering Distinguished Speaker Series, University of Buffalo, 2013
- "Force-Directed Graph Drawing Using Social Gravity and Scaling," invited talk, ICERM Workshop on Stochastic Graph Models, Providence, RI, 2014
- "Invertible Bloom Lookup Tables and Their Applications in Large-Scale Data Analysis," invited key-note speaker, Algorithms for Big Data, Frankfurt, Germany, 2014
- "Invertible Bloom Lookup Tables and Their Applications in Large-Scale Data Analysis," Brown University, Providence, RI, 2014
- "Studying Road Networks Through an Algorithmic Lens," Bold Aspirations Visitor and Lecture, University of Kansas, 2015
- "Learning Character Strings via Mastermind Queries, with Case Studies," Invited Lecture, Workshop on Pattern Matching, Data Structures and Compression, Bar-Ilan University, Tel Aviv, Israel, 2016
- "Invertible Bloom Lookup Tables and Their Applications in Data Analysis," University of Hawaii, 2016
- "Invertible Bloom Lookup Tables," Purdue University, 2016
- "Combinatorial Pair Testing: Distinguishing Workers from Slackers," Calvin Univ., 2016
- "Invertible Bloom Lookup Tables," University of California, Riverside, 2016
- "2-3 Cuckoo Filters for Faster Triangle Listing and Set Intersection," Technion, Israel Institute of Technology, Haifa, Israel, 2017
- "2-3 Cuckoo Filters for Faster Triangle Listing and Set Intersection," University of Arizona, 2017
- "Parallel Computational Geometry," First Hawaii Workshop on Parallel Algorithms and Data Structures, University of Hawaii, 2017
- "Fighting Gerrymandering with Algorithmic Fairness," Calvin University, 2019
- "Fighting Gerrymandering with Algorithmic Fairness," Carnegie Mellon University, 2019
- "Sorting Evolving Data in Parallel," Second Hawaii Workshop on Parallel Algorithms and Data Structures, University of Hawaii, 2019
- "Dealing with Big Data via External Memory Algorithms and Data Structures," Aarhus University, Denmark, 2021
- "Dealing with Big Data via External Memory Algorithms and Data Structures," Royal Danish

Academy of Sciences and Letters, 2021

- "Augmenting Networks for Greedy Routing," Dept. of Electrical and Computer Engineering, Distinguished Lecturer Series, Iowa State University, Dec. 2023.
- "Augmenting Networks for Greedy Routing," Dept. of Computer Science, University of California, Riverside, June 2024.
- "String Algorithms," Dept. of Computer Science, University of Hawaii, Dec. 2024.



**Patent Owner, NTECH Properties, Inc. - Ex. 2001, p. 64**

**TECHNICAL EXPERT CONSULTING SUMMARY**
**(LAST FIVE YEARS)**

# Michael T. Goodrich, PhD

Dept. of Computer Science
Bren School of Info. & Computer Sciences
University of California, Irvine
Irvine, CA 92697-3435

http://www.ics.uci.edu/~goodrich/
E-mail: mike.t.goodrich (at) gmail.com

## TECHNICAL EXPERT CONSULTING

The following is a listing of prior and current expert consulting since 2019, where I have testified as an expert, but it may not include confidential information, as per written agreements.

1. Apr. 2016 to Sep. 2024, Technical expert and deponent, retained through Kramer Levin LLP on behalf of Acceleration Bay LLC, in IPR proceedings and patent litigation, Acceleration Bay LLC v. Activision Bizzard, Inc., Electronic Arts Inc., Take-Two Interactive Software, Inc., Rockstar Games, Inc., and 2K Sports, Inc. Civil Actions No. 1:16-cv-00453-RGA, No. 1:16-cv-00454-RGA, No. 1:16-cv-00455-RGA (D. Del.), IPR2015-01951, IPR2015-01953, IPR2015-01964, IPR2015-01970, IPR2015-01972, IPR2015-01996, IPR2016-00724, and IPR2016-00747 (PTAB).

2. May 2016 to Apr. 2023, Technical expert and deponent, retained through Kramer Levin LLP (transferred to Fish & Richardson) on behalf of Finjan, Inc., in PTO proceedings and patent litigations, Finjan, Inc. v. Blue Coat, Finjan, Inc. v. ESET, LLC, Finjan, Inc. v. Juniper Networks, Inc., Finjan, Inc. v. Cisco Systems, Inc., Finjan, Inc. v. Qualys, Inc., Finjan, Inc. v. Rapid7, Inc., and Finjan, Inc. v. SonicWall, Inc., IPR2015-01974, IPR2015-01979, IPR2016-00478, IPR2016-00159 (PTAB), 5:15-cv-03295-BLF-PSG (N.D. Cal.), 3:17-cv-05659-WHA (N.D. Cal.), 3:17-cv-0183-CAB-BGS (S.D. Cal.), 17-cv-0072-BLF-SVK (N.D. Cal.), 4:18-cv-07229-YGR (N.D. Cal.), 1:18cv-01519-MN (Del.), and 5:17-cv-04467-BLF (N.D. Cal.).

3. Jan. 2017 to Jan. 2021, Technical expert and deponent, retained by Fitzpatrick, Cella, Harper & Scinto, Venable LLP, on behalf of Koninklijke Philips N.V. and U.S. Philips Corp., in patent litigation, Philips v. Acer Inc., ASUSTeK Computer, Double Power Tech., HTC, Southern Telecom, Visual Land, Zowee Marketing Co., Ltd., Shenzen Zowee Technology Co., Ltd., YiFang USA, Inc. d/b/a EFun, Inc., and Intervenor/Counterclaim Defendant Microsoft Corporation. Civil Actions No. 15-1125-GMS, No. 15-1126-GMS, No. 15-1127-GMS, No. 15-1128-GMS, No. 15-1130-GMS, No. 15-1131-GMS, No. 15-1170-GMS (D. Del.), and 4:18-cv-01885-HSG (N.D. Cal., Oakland Div.).

4. Jun. 2018 to present, Technical expert, declarant, deponent, and testifying trial expert witness, retained through Kramer Levin LLP on behalf of Centripetal Networks, Inc., in IPRs

and patent litigation, Centripetal Networks, Inc. v. Keysight Technologies, Inc., Ixia, and Cisco. Civil Actions No. 2:17-cv-00383/HCM-LRL and 2:18-cv-00094-HCM-LRL (E.D. Virginia), 2:22-cv-00002 (E.D. Virginia), IPR2018-01386, IPR2018-01443, IPR2018-01444, IPR2018-01512, IPR2018-01513, IPR2022-01525, IPR2023-00445, IPR2023-00446, IPR2023-00448 (PTAB), and Inv. No. 337-TA-1314 (ITC).

5. Feb. 2019 to present, Technical expert, declarant, deponent, and testifying trial expert witness, retained through Reichman Jorgensen LLP on behalf of Kove IO, Inc., in patent litigation, Kove IO, Inc. v. Amazon Web Services, Inc., Civil Action No. 1:18-cv-08175 (N.D. Illinois, Eastern Div.).

6. Apr. 2019 to Sep. 2020, Technical expert, declarant, and deponent, retained by McKool Smith on behalf of SEVEN Networks LLC in patent litigation, SEVEN Networks LLC v. Apple, Inc. Civil Action No. 2:19-cv-115 (E.D. Texas).

7. Jun. 2019 to Jun. 2023, Technical expert, declarant, and deponent, retained through Kramer Levin LLP on behalf of CUPP Cybersecurity LLC, in patent litigation, CUPP Cybersecurity LLC, et al., v. Trend Micro, Inc. IPR2021-00813, IPR2021-01236, IPR2021-01237 (PTAB), Civil Action no. 3:18-cv-01251-M, 3:20-cv-03206-M (N.D. Texas).

8. Jul. 2020 to Feb. 2021, Technical expert and declarant, retained through Goodwin Procter LLP on behalf of MobileIron, Inc., in patent litigation, MobileIron, Inc. v. BlackBerry Corp. IPR2020-01741 (PTAB).

9. Aug. 2020 to present, Technical expert and declarant, retained through Thompson & Knight LLP (now Holland & Knight) on behalf of Broadcom Corp., in patent litigation, Broadcom Corp. and Avago Technologies International Sales PTE. Limited v. Netflix, Inc. Civil actions no. 8:20-cv-529 (C.D. Cal.), 3:20-cv-04677-JD (N.D. Cal.).

10. Nov. 2020 to Dec. 2021, Technical expert and deponent, retained through Kramer Levin LLP on behalf of Midwest Athletics and Sports Alliance LLC (MASA), in patent litigation, Midwest Athletics and Sports Alliance LLC v. RICOH USA, Inc., and Midwest Athletics and Sports Alliance LLC v. Xerox Corp. Civil Action Nos. 19-CV-00514 (E.D. Penn.) and 6:19-CV-06036-EAW-JFW (W.D. New York).

11. Mar. 2021 to Feb. 2024, Technical expert, declarant, and deponent, retained through Nix Patterson LLP on behalf of Ikorongo Technology LLC, in patent litigation, Ikorongo v. Samsung, LG, Lyft, Uber, and Bumble Trading, Civil Action Nos. 6:20-cv-00256-ADA, 6:20-cv-00257-ADA, 6:20-cv-00258-ADA, 6:20-cv-00259-ADA, 6:20-cv-00843-ADA (W.D. Texas, Waco), and IPR2021-00204 (PTAB).

12. May 2021 to Aug. 2024, Technical expert, declarant, and deponent, retained by McKool Smith on behalf of SEVEN Networks LLC in patent litigation, SEVEN Networks, LLC v. Motorola Mobility LLC. Civil Action Nos. 2:21-cv-88 (E.D. Texas) and 3:21-cv-1036 (N.D. Texas).

13. Aug. 2021 to present, Technical expert, declarant, and deponent, retained through Holland & Knight LLP on behalf of CA, Inc., in patent litigation, CA, Inc. and Avago Technologies International Sales PTE. Limited v. Netflix, Inc. Civil action no. 2:21-cv-00080-JRG-RSP (E.D. Texas).

14. Aug. 2021 to present, Technical expert, declarant, deponent, and testifying trial expert witness, retained through Kramer Levin LLP on behalf of Centripetal Networks, Inc., in patent litigation and IPRs, Centripetal Networks, Inc. v. Palo Alto Networks, Inc. Civil Action No. 2:21-cv-00137 (E.D. Virginia, Norfolk Div.), IPR2021-01149, IPR2021-01150, IPR2021-01152, IPR2021-01157, IPR2022-00182 (PTAB).

15. Jul. 2022 to May 2024, Technical expert, deponant, and declarant, retained through McKool Smith on behalf of the State of Texas, in litigation State of Texas v. Meta Platforms, Inc., Cause No. 22-0121.

16. Aug. 2022 to present, Technical expert and declarant, retained through Stamoulis & Weinblatt LLC on behalf of Ameranth, Inc., in a patent-related matter.

17. Sep. 2022 to present, Technical expert, deponent, and declarant, retained through Reichman Jorgensen Lehman & Feldberg LLP on behalf of VideoLabs, Inc., in patent-related matters, VideoLabs v. Netflix, and Starz Entertainment, LLC, et al. v. VL Collective IP, LLC and VideoLabs, Inc., Civil Action No. 21-cv-1448-JLH (D. Del.), IPR2022-01086, IPR2023-00628, IPR2023-00630, IPR2023-00891.

18. Nov. 2022 to Jun. 2023, Technical expert and declarant, retained through McKool Smith on behalf of American Airlines, Inc., in a patent-related litigation, R2 Solutions LLC v. American Airlines, Inc., Civil Action No.4:22-cv-00353 (E.D. Tex.).

19. Feb. 2023 to Nov. 2023, Technical expert and declarant, retained through Kirkland and Ellis LLP on behalf of Forcepoint LLC in a patent-related litigation, Webroot, Inc. et al. v. Forcepoint LLC, Case No. 6:22-cv-00341-ADA (W.D. Tex.).

20. Feb. 2023 to Dec. 2023, Technical expert and declarant, retained through Holland & Knight LLP on behalf of MDSave Shared Services, Inc., in a patent-related litigation.

21. Aug. 2023 to Sep. 2024, Technical expert, declarant, and deponent, retained though Kramer Levin LLP on behalf of Acceleration Bay LLC in patent-related litigation, Acceleration Bay LLC v. Amazon Web Services, Inc., Case No. 1:22-cv-904 (D. Del.).

22. Feb. 2024 to May 2024, Technical expert and declarant, retained through McKool Smith on behalf of AlphaSense, Inc., in patent litigation, AlphaSense, Oy and AlphaSense, Inc. v. Tegus, Inc. and Bamsec, LLC, Case No. cv-23-1030-MN (D. Del.).

23. May 2024 to present, Technical expert and declarant, retained through Reichman Jorgensen Lehman & Feldberg LLP on behalf of Kove IO, Inc., in patent litigation, Kove IO, Inc. v. Google, LLC, No. 1:23-cv-04244 (N.D. Ill.).

24. July 2024 to present, Technical expert, declarant, and deponent, retained through McKool Smith on behalf of Carbyne Biometrics, LLC, in patent litigation, Apple, Inc., Petitioner v. Carbyne Biometrics, LLC, Patent Owner in Case: (1) IPR2024-00329, U.S. Patent No. 9,972,010; (2) IPR2024-00330, U.S. Patent No. 10,713,656; (3) IPR2024-00331, U.S. Patent No. 11,526,886; (4) IPR2024-00332, U.S. Patent No. 10,929,512; (5) IPR2024-00333, U.S. Patent No. 11,475,105; (6) IPR2024-00334, U.S. Patent No. 11,514,138; and (7) IPR2024-00507, U.S. Patent No. 11,475,105.

25. October 2024 to present, Technical expert, retained through Kramer Levin LLP on behalf of Cyandia, Inc., in patent litigation Cyandia, Inc. v. SAP America, Inc., and SAP SE, Case No. 2:22-cv-00096-JRG.

26. November 2024 to present, Technical expert and declarant, Kramer Levin LLP on behalf of NTECH Properties, Inc. in patent litigation NTECH Properties, Inc. in v. ByteDance LTD., ByteDance PTE. LTD, TikTok PTE. LTD., and TikTok Inc., Case No. 2:24-cv-00130-JRG and IPR2024-01340, IPR2024-01341, IPR2024-01342, and IPR2024-01343.