US009948968B2

(12) **United States Patent**
Tanaka

(10) **Patent No.: US 9,948,968 B2**
(45) **Date of Patent: *Apr. 17, 2018**

(54) **DIGITAL CONTENTS RECEIVING APPARATUS**

(71) Applicant: **Masahide Tanaka**, Osaka (JP)

(72) Inventor: **Masahide Tanaka**, Osaka (JP)

(73) Assignee: **NL GIKEN INCORPORATED**, Osaka (JP)

(*) Notice: Subject to any disclaimer, the term of this patent is extended or adjusted under 35 U.S.C. 154(b) by 0 days.

This patent is subject to a terminal disclaimer.

(21) Appl. No.: **15/633,776**

(22) Filed: **Jun. 27, 2017**

(65) **Prior Publication Data**

US 2017/0295390 A1 Oct. 12, 2017

Related U.S. Application Data

(63) Continuation of application No. 14/934,331, filed on Nov. 6, 2015, now Pat. No. 9,762,964, which is a (Continued)

(30) **Foreign Application Priority Data**

Sep. 14, 2008 (JP) 2008-235797

(51) **Int. Cl.**
H04N 21/00 (2011.01)
H04N 21/2665 (2011.01)
(Continued)

(52) **U.S. Cl.**
CPC ***H04N 21/2665*** (2013.01); ***H04N 21/4331*** (2013.01); ***H04N 21/4383*** (2013.01); ***H04N 21/4622*** (2013.01); ***H04N 21/8586*** (2013.01)

(58) **Field of Classification Search**
CPC H04N 7/16; H04N 21/4432
See application file for complete search history.

(56) **References Cited**

U.S. PATENT DOCUMENTS

5,778,181 A * 7/1998 Hidary H04L 29/06 348/E7.024
5,832,223 A * 11/1998 Hara H04H 20/93 348/449

(Continued)

OTHER PUBLICATIONS

Zhang et al, "An integrated live interactive content insertion system for digital TV commerce", IEEE, 2002, pp. 1-8.*

Primary Examiner — Ali Shayanfar

(57) **ABSTRACT**

A television set is capable of receiving both broadcast program from television station and corresponding digital file of the same contents from a server station through internet. The television set keeps information of time limit for the server station to surely provide the file. The television set automatically downloads the file when the time limit comes close or the time limit information is failed to be kept. The television set keeps URL for the moving image program enjoyed upon turning-off of the television set until the next turning-on for instantly enjoying the moving image content provided at the URL. User who turning-on the television set or changing the channel with any program not in mind to feel interest in the program on display by chance can enjoy the program from the beginning by means of downloading corresponding digital file of the same contents through internet by an automatic link.

12 Claims, 8 Drawing Sheets

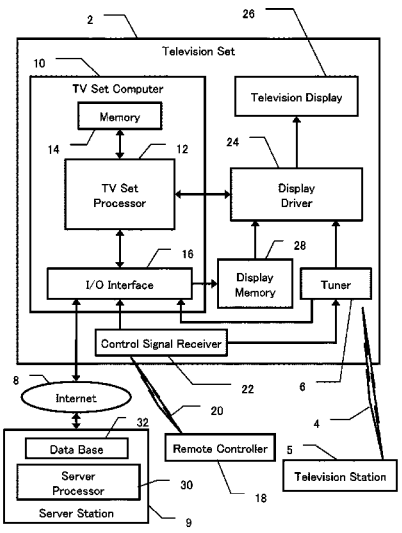

Related U.S. Application Data

continuation of application No. 14/519,389, filed on Oct. 21, 2014, now Pat. No. 9,210,484, which is a continuation of application No. 14/224,070, filed on Mar. 25, 2014, now Pat. No. 8,893,187, which is a continuation of application No. 12/557,476, filed on Sep. 10, 2009, now Pat. No. 8,726,028.

(51) **Int. Cl.**

H04N 21/462	(2011.01)
H04N 21/433	(2011.01)
H04N 21/438	(2011.01)
H04N 21/858	(2011.01)

(56) **References Cited**

U.S. PATENT DOCUMENTS

6,018,768 A * 1/2000 Ullman H04L 29/06 348/E7.024
6,978,475 B1 * 12/2005 Kunin H04M 3/4938 725/106
8,171,509 B1 * 5/2012 Girouard G06Q 30/0241 705/14.4
2002/0013945 A1 * 1/2002 Nashida H04N 5/76 725/58
2007/0112583 A1 * 5/2007 Hua G06K 9/00711 382/229
2007/0174336 A1 * 7/2007 Day H04N 7/17318
2008/0015997 A1 * 1/2008 Moroney G06F 21/10 705/51
2008/0127283 A1 * 5/2008 Sasaki H04N 7/17318 725/88
2008/0155615 A1 * 6/2008 Craner H04N 5/765 725/91
2008/0310518 A1 * 12/2008 Song H04N 21/2221 375/240.27
2008/0313670 A1 * 12/2008 Ho H04N 5/44591 725/34
2008/0320522 A1 * 12/2008 Jones H04H 20/38 725/46
2009/0028079 A1 * 1/2009 Song H04L 1/0041 370/310
2009/0125291 A1 * 5/2009 Mohandas G06T 7/00 703/13
2009/0175218 A1 * 7/2009 Song H03M 13/271 370/328
2009/0287554 A1 * 11/2009 Kim G06Q 30/02 705/14.14
2010/0063989 A1 * 3/2010 Mehta H04N 21/2343 709/202
2010/0088721 A1 * 4/2010 Hong H04N 7/17318 725/38
2010/0111504 A1 * 5/2010 Yu H04N 5/76 386/241
2010/0154023 A1 * 6/2010 Dey H04N 21/41407 725/151
2010/0263002 A1 * 10/2010 Meuninck G11B 27/322 725/91
2012/0021732 A1 * 1/2012 Lam H04W 4/00 455/418
2016/0080205 A1 * 3/2016 Brown H04L 41/0853 709/220

* cited by examiner

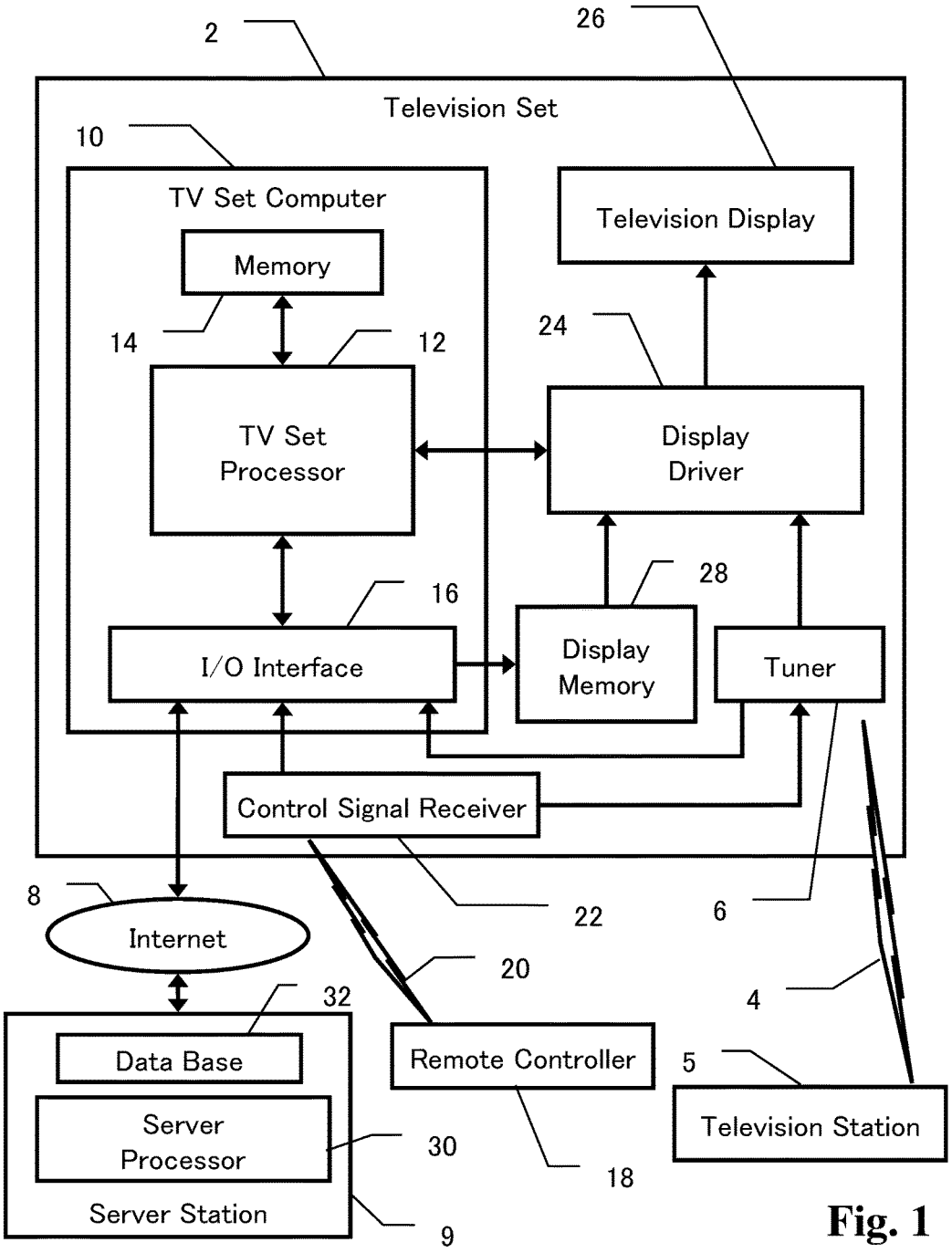
2
26
Television Set
10
TV Set Computer
Television Display
Memory
14
12
24
TV Set Processor
Display Driver
28
16
I/O Interface
Display Memory
Tuner
Control Signal Receiver
8
22
6
Internet
20
32
4
Data Base
Remote Controller
5
Server Processor
30
Television Station
18
Server Station
9

Fig. 1

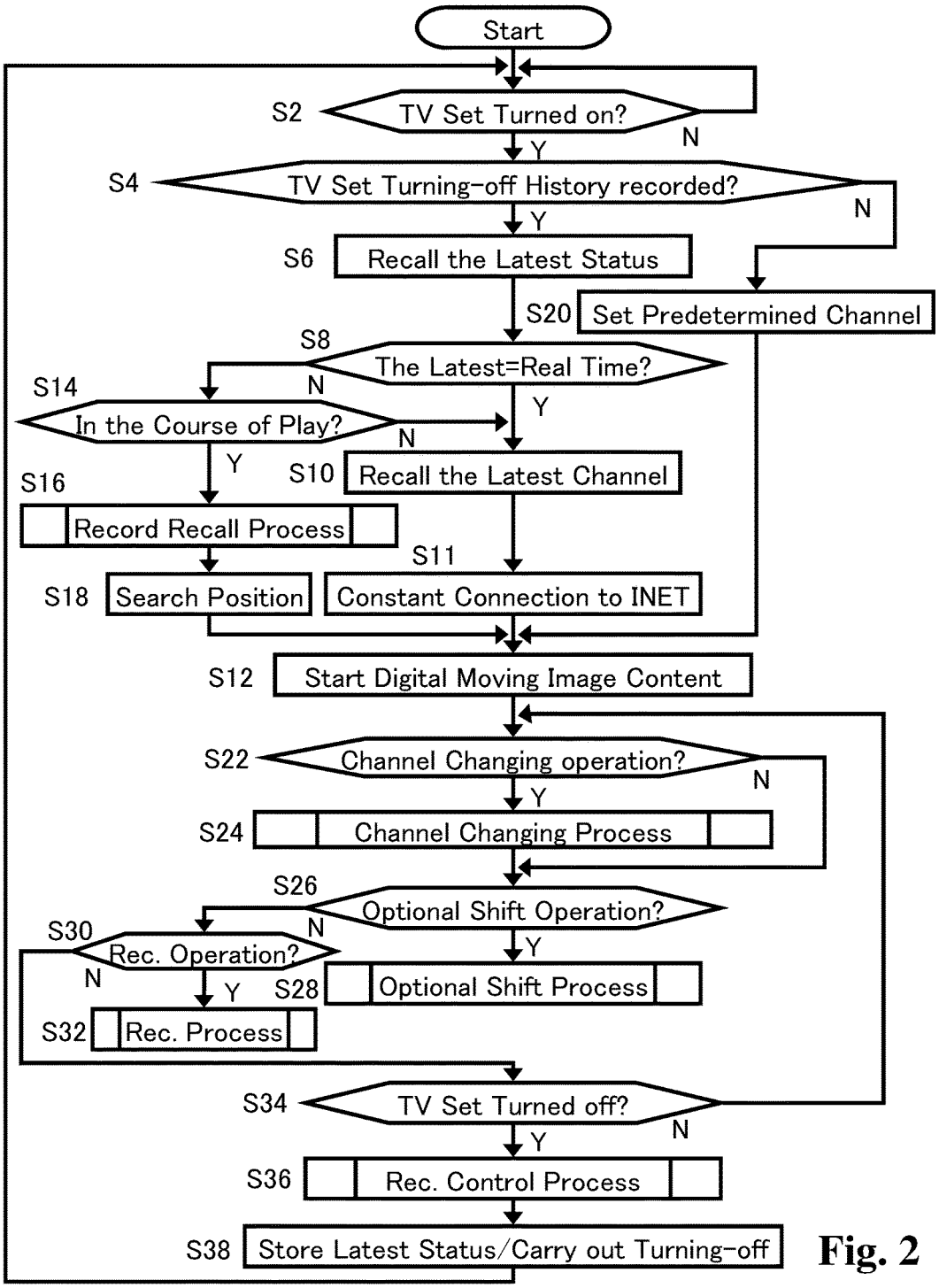
Start
S2
TV Set Turned on?
N
Y
S4
TV Set Turning-off History recorded?
N
Y
S6
Recall the Latest Status
S20
Set Predetermined Channel
S8
The Latest=Real Time?
N
Y
S14
In the Course of Play?
N
Y
S10
Recall the Latest Channel
S16
Record Recall Process
S11
S18
Search Position
Constant Connection to INET
S12
Start Digital Moving Image Content
S22
Channel Changing operation?
N
Y
S24
Channel Changing Process
S26
Optional Shift Operation?
N
Y
S30
Rec. Operation?
N
Y
S28
Optional Shift Process
S32
Rec. Process
S34
TV Set Turned off?
N
Y
S36
Rec. Control Process
S38
Store Latest Status/Carry out Turning-off

Fig. 2

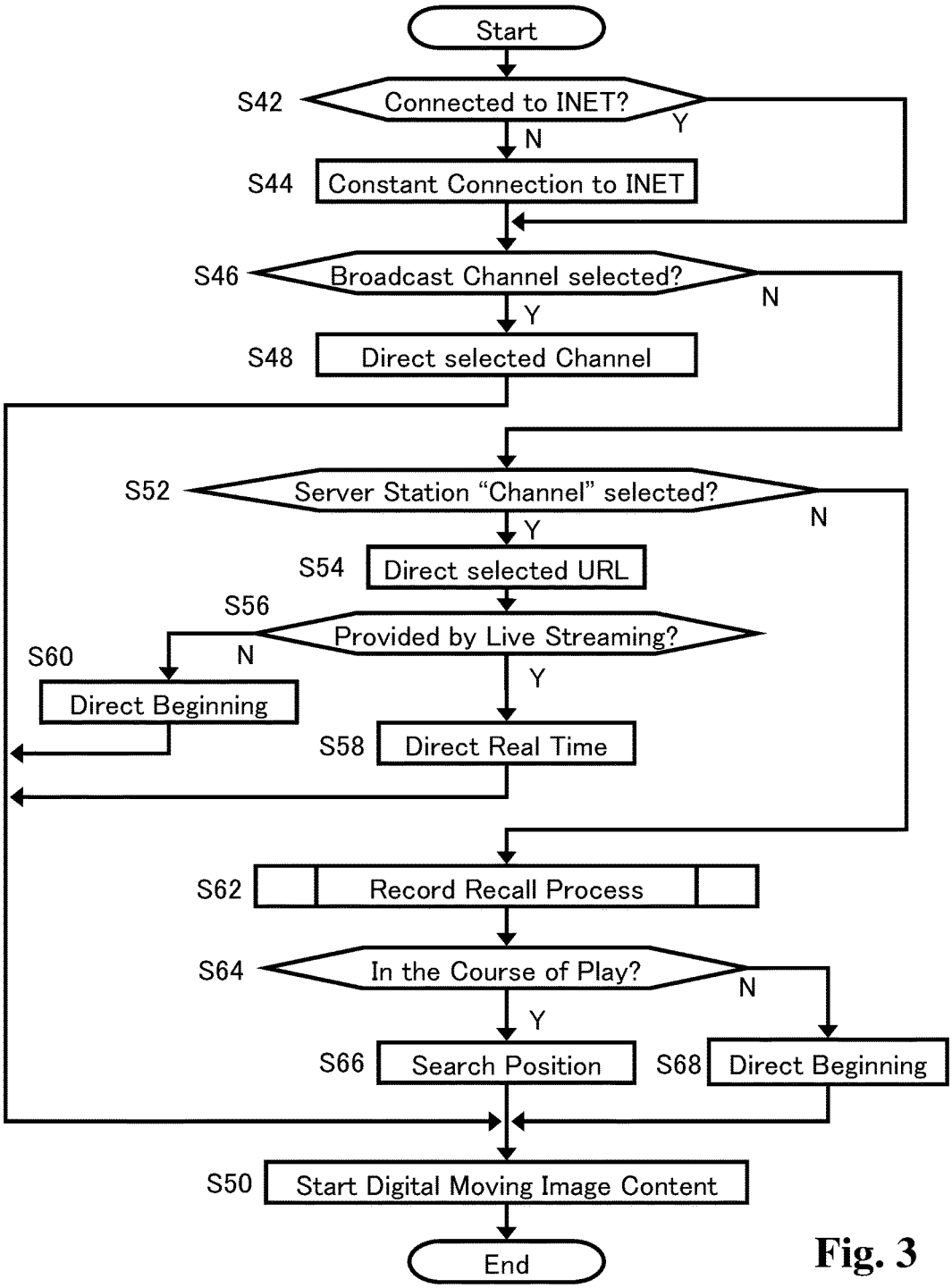
Start
S42
Connected to INET?
Y
N
S44
Constant Connection to INET
S46
Broadcast Channel selected?
N
Y
S48
Direct selected Channel
S52
Server Station "Channel" selected?
N
Y
S54
Direct selected URL
S56
Provided by Live Streaming?
S60
N
Y
Direct Beginning
S58
Direct Real Time
S62
Record Recall Process
S64
In the Course of Play?
N
Y
S66
Search Position
S68
Direct Beginning
S50
Start Digital Moving Image Content
End

Fig. 3

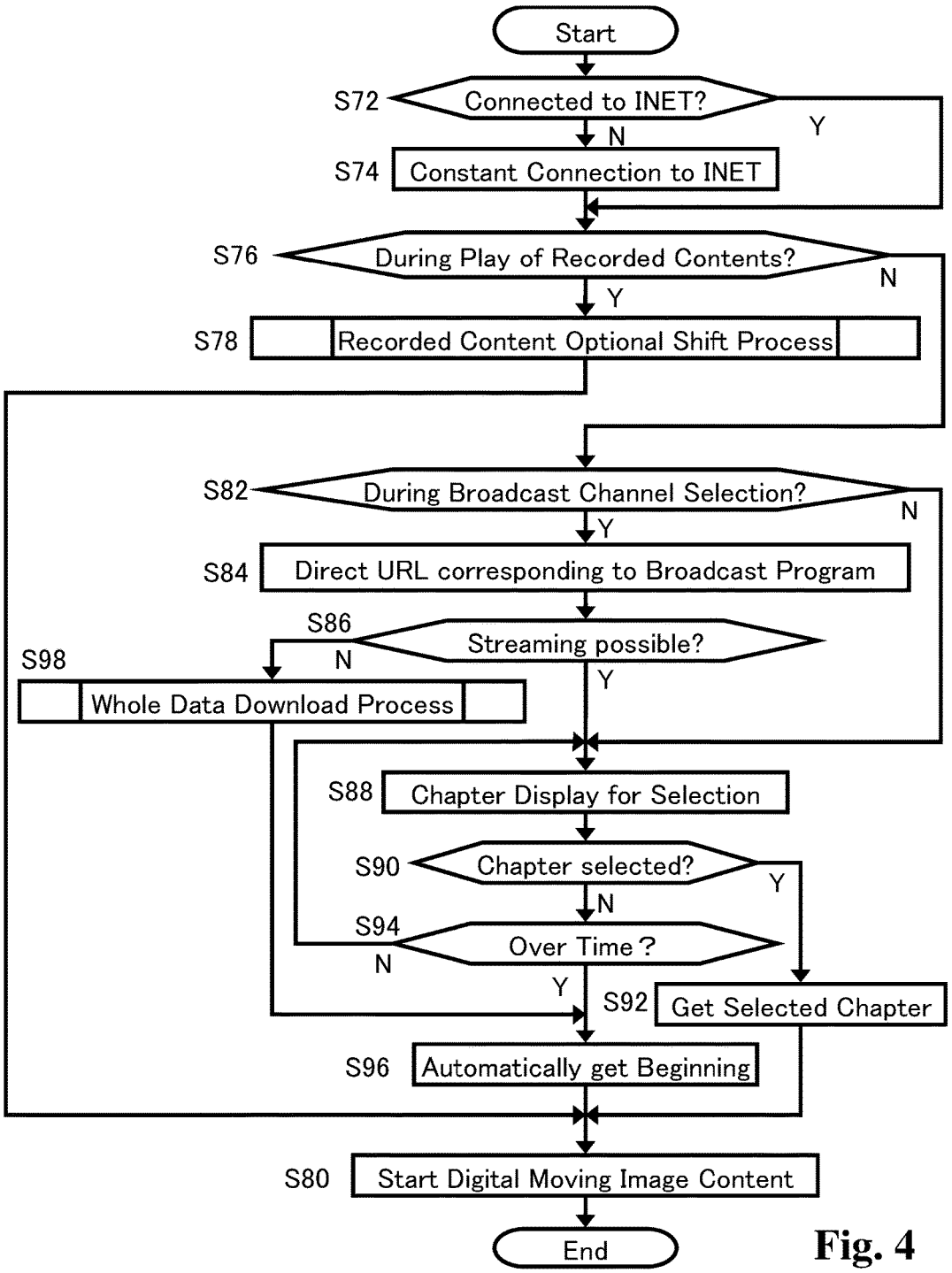
Start
S72
Connected to INET?
Y
N
S74
Constant Connection to INET
S76
During Play of Recorded Contents?
N
Y
S78
Recorded Content Optional Shift Process
S82
During Broadcast Channel Selection?
N
Y
S84
Direct URL corresponding to Broadcast Program
S86
Streaming possible?
N
Y
S98
Whole Data Download Process
S88
Chapter Display for Selection
S90
Chapter selected?
Y
N
S94
Over Time ?
N
Y
S92
Get Selected Chapter
S96
Automatically get Beginning
S80
Start Digital Moving Image Content
End

Fig. 4

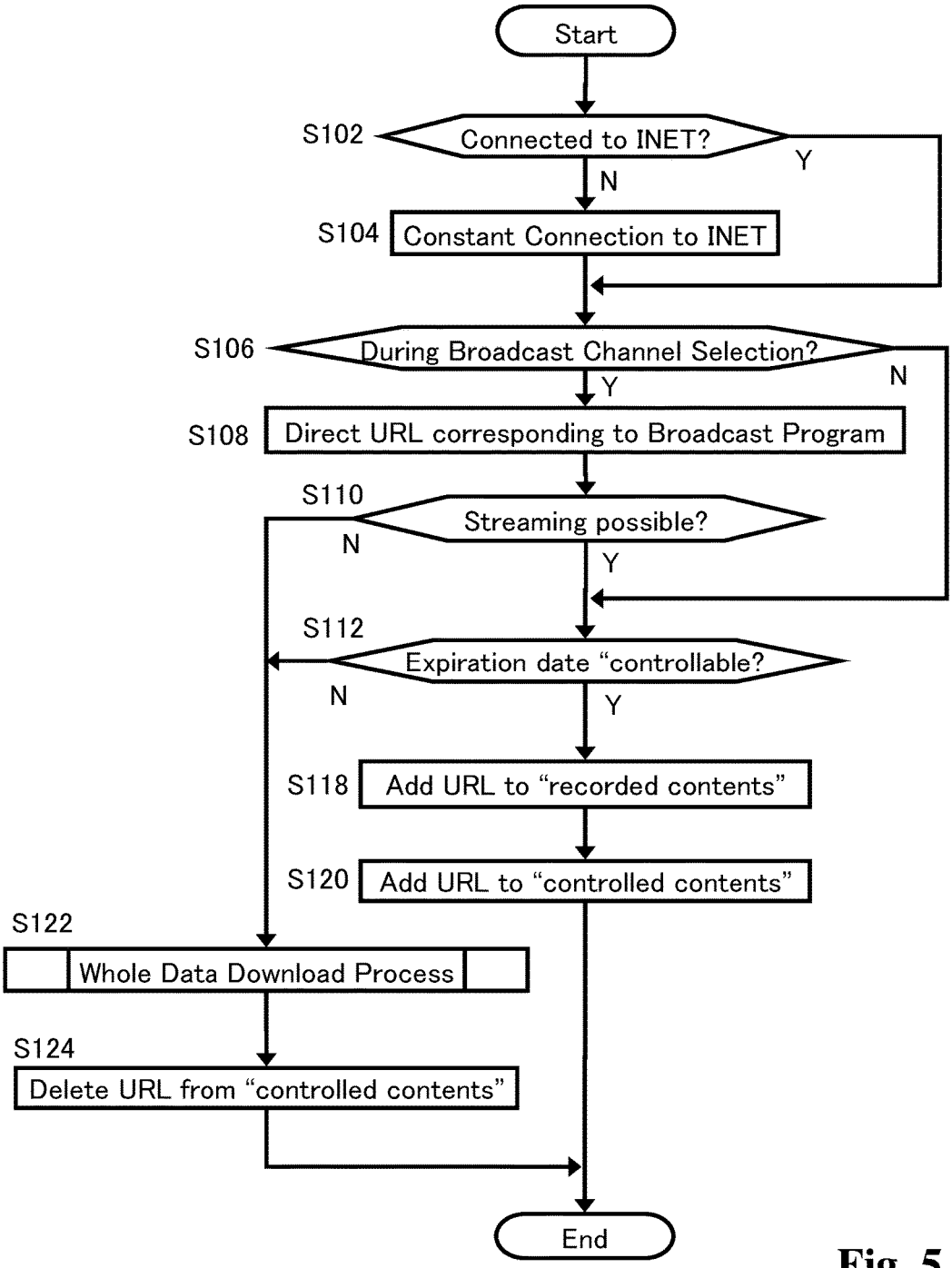
Start
S102
Connected to INET?
Y
N
S104
Constant Connection to INET
S106
During Broadcast Channel Selection?
N
Y
S108
Direct URL corresponding to Broadcast Program
S110
Streaming possible?
N
Y
S112
Expiration date "controllable?
N
Y
S118
Add URL to "recorded contents"
S120
Add URL to "controlled contents"
S122
Whole Data Download Process
S124
Delete URL from "controlled contents"
End

Fig. 5

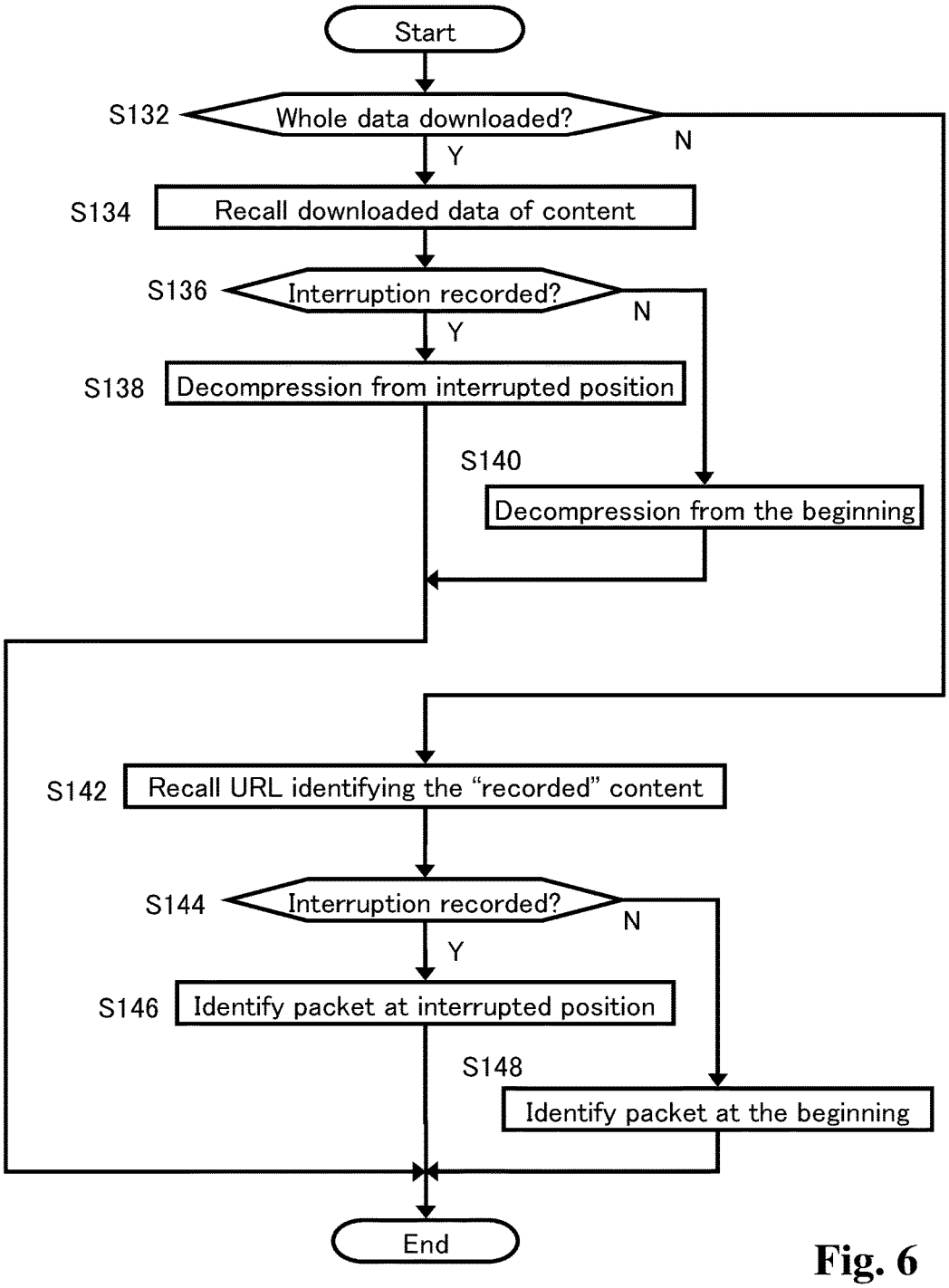
Start
S132
Whole data downloaded?
Y
N
S134
Recall downloaded data of content
S136
Interruption recorded?
Y
N
S138
Decompression from interrupted position
S140
Decompression from the beginning
S142
Recall URL identifying the "recorded" content
S144
Interruption recorded?
Y
N
S146
Identify packet at interrupted position
S148
Identify packet at the beginning
End

Fig. 6

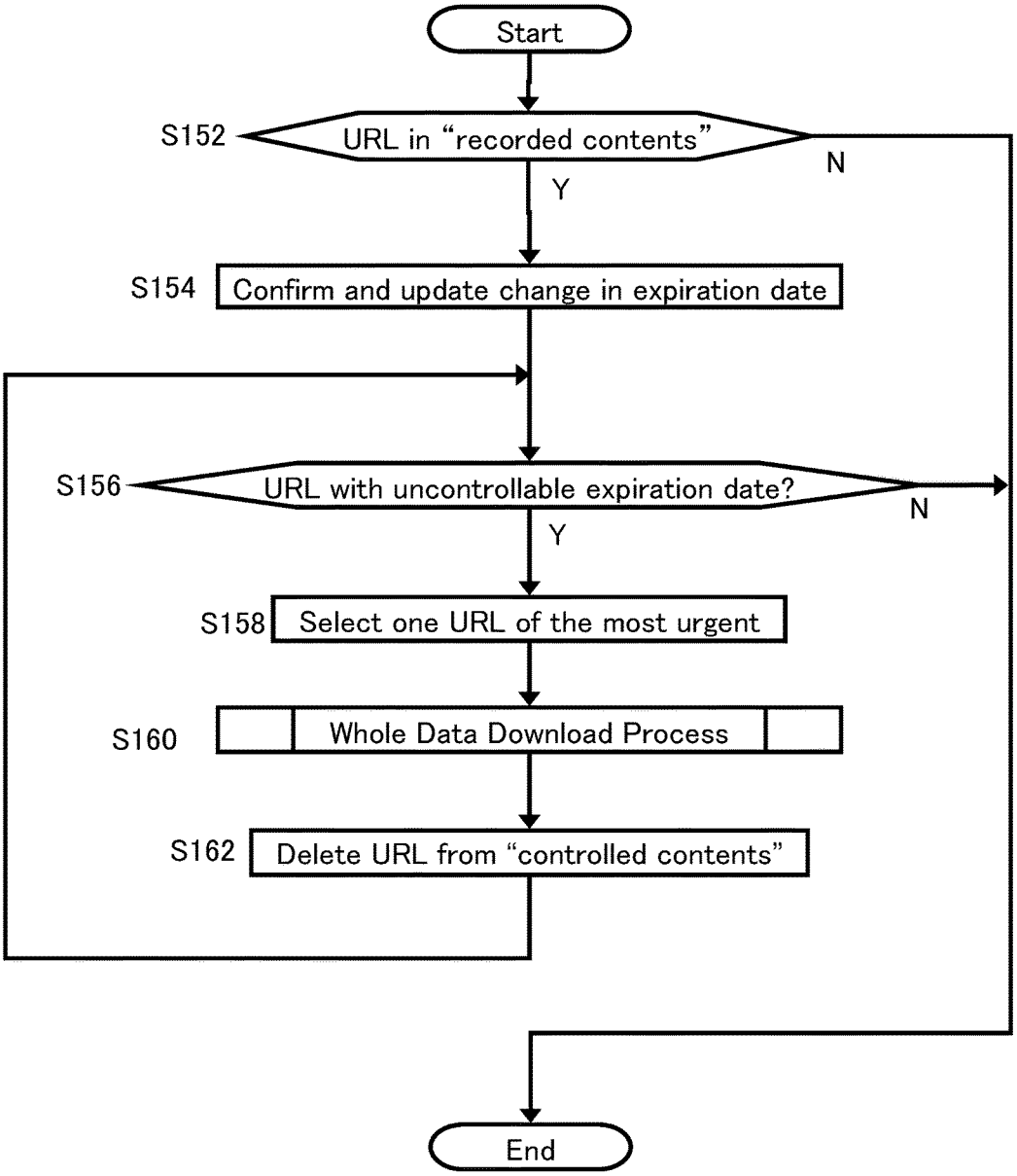
Start
S152
URL in "recorded contents"
N
Y
S154
Confirm and update change in expiration date
S156
URL with uncontrollable expiration date?
N
Y
S158
Select one URL of the most urgent
S160
Whole Data Download Process
S162
Delete URL from "controlled contents"
End

Fig. 7

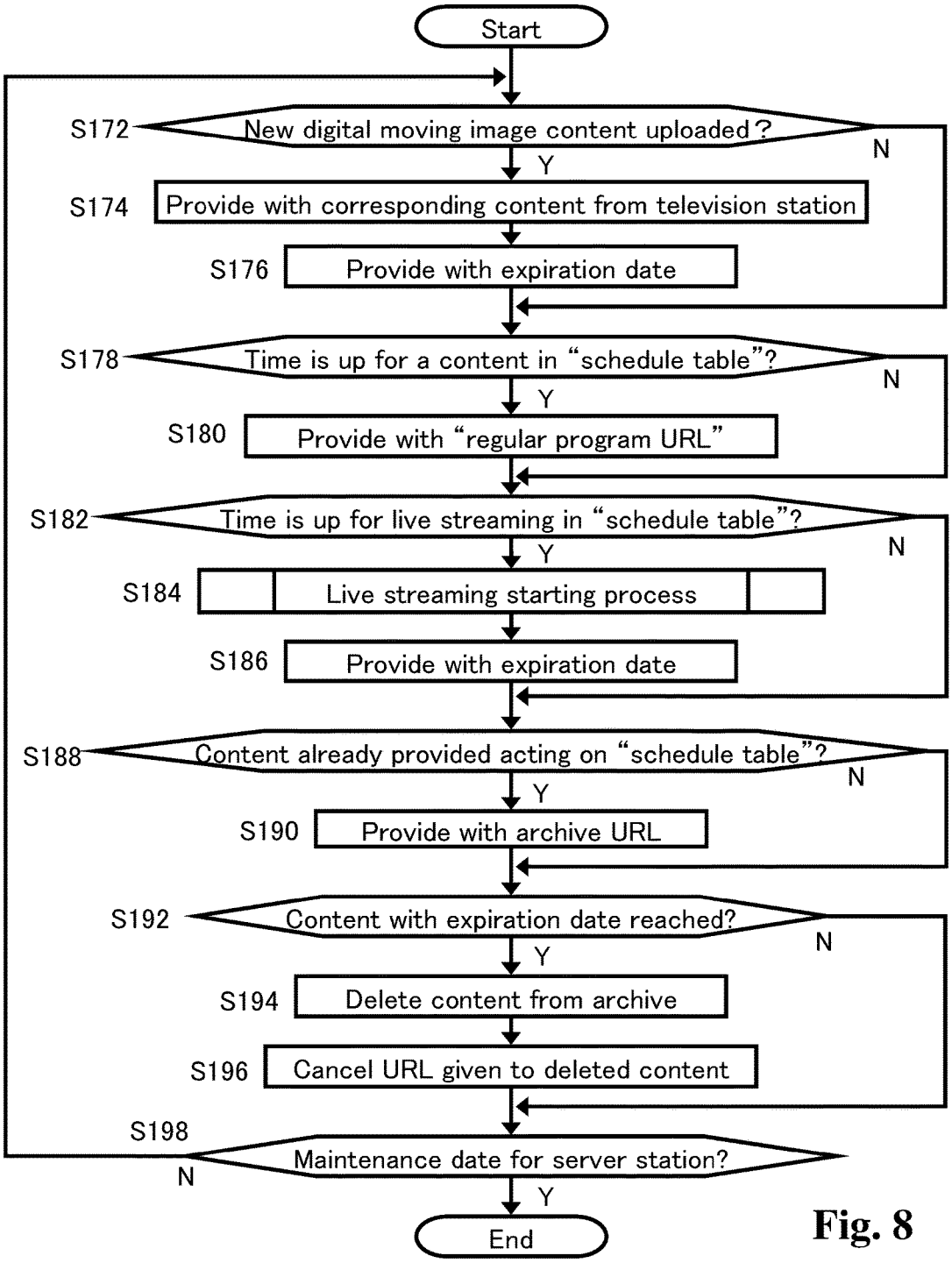
Start
S172
New digital moving image content uploaded?
Y
N
S174
Provide with corresponding content from television station
S176
Provide with expiration date
S178
Time is up for a content in "schedule table"?
Y
N
S180
Provide with "regular program URL"
S182
Time is up for live streaming in "schedule table"?
Y
N
S184
Live streaming starting process
S186
Provide with expiration date
S188
Content already provided acting on "schedule table"?
Y
N
S190
Provide with archive URL
S192
Content with expiration date reached?
Y
N
S194
Delete content from archive
S196
Cancel URL given to deleted content
S198
Maintenance date for server station?
N
Y
End

Fig. 8

DIGITAL CONTENTS RECEIVING APPARATUS

CROSS REFERENCE TO RELATED APPLICATION

This application is a Continuation application of U.S. application Ser. No. 14/934,331 filed Nov. 6, 2015, which is a continuation application of U.S. application Ser. No. 14/519,389 filed Oct. 21, 2014, which is a continuation application of U.S. application Ser. No. 14/224,070 filed Mar. 25, 2014, which is a continuation application of U.S. application Ser. No. 12/557,476 filed Sep. 10, 2009, herein incorporated by reference in its entirety.

BACKGROUND OF THE INVENTION

1. Field of the Invention

This invention relates to a digital contents receiving apparatus.

2. Description of the Related Art

In this field of the art, various digital contents receiving apparatus have been proposed. Typical digital contents are digital moving image contents, which have been provided by television stations through digital airwaves. Such digital moving image contents are typically received by television sets as the digital contents receiving apparatus for users to enjoy them in real time. Or the digital moving image contents provided by television stations are received by recording apparatus as the digital contents receiving apparatus, such as DVD (Digital Versatile Disc) recorders or HDD (Hard Disk Drive) recorders.

Further, the digital moving image contents have provided by server stations through the internet for a personal computer as the digital contents receiver to receive the digital moving image contents. In this case, the data of digital moving image contents have been downloaded in the compressed filed and decompressed when enjoyed. The digital moving image contents have been also enjoyed through internet in real time by means of streaming technology. Though the internet, not only the digital moving image contents, but also other various digital contents, such as digital still image contents and digital text data for various digital contents receiving apparatus to receive them.

Japanese Laid-open Patent Application No. 2006-319955 proposes an example of automatic recording and playback apparatus for digital moving image contents. Japanese Laid-open Patent Application No. 2001-285743 proposes an example of television set capable of connection to the internet.

However, the increase of options may enrich the world of digital contents receiving apparatuses, it puts ordinary and majority of users, who cannot fully appreciate them, into confusion at the same time. Thus, there still exist in this field of art many demands for improvements of the digital contents receiving apparatuses.

SUMMARY OF THE INVENTION

An object of this invention is to propose an improved digital contents receiving apparatus in easiness of use.

Another object of this invention is to propose an improved digital moving image contents receiving apparatus in easiness of use.

To achieve one of the above objects, this invention provides a receiving apparatus capable of receiving digital contents from outside contents source comprising a first unit arranged to designate one of the digital contents in the outside source, a second unit arranged to keep information necessary for the first unit to designating the same digital content again, and a third unit arranged to automatically obtain from the outside source information relating to control of the designated digital content and keep the information in relation to the information kept in the second unit. According to the feature of this invention, the receiving apparatus can tightly cooperate with the outside content source with a mismatch therebetween avoided.

According to a detailed feature of this invention, the information obtained and kept by the third unit above relates to the time limit for the outside source to surely provide the designated content. By means of this feature, the receiving apparatus can rely on the outside source to avoid such a mismatch that the desired digital content has been deleted form the outside source when the receiving apparatus designates the same digital content again

According to another detailed feature of this invention, the receiving apparatus further comprises a fourth unit arranged to automatically receive the designated digital content in response to the information kept by the third unit and store the received digital content. By means of this feature, the desired digital content can be automatically secured in case the outside source will delete the same. According to a further detailed feature of this invention above, the fourth unit is arranged to automatically receive the designated digital content in advance to such a situation that the outside source can no more provide the designated digital content.

According to another detailed feature of this invention, the receiving apparatus further comprises a fourth unit arranged to automatically receive the designated digital content if the third unit fails to obtain the information relating to control of the designated digital content. By means of this feature, the desired digital content can be automatically secured on the safe side under the situation of insufficient information.

According to another detailed feature of this invention, the receiving apparatus further comprises a fourth unit arranged to receive the designated digital content in response to a manual operation for demanding the designated digital content. By means of this feature, the desired digital content can be downloaded any time depending on own responsibility of the user.

A typical example of the digital contents relate to digital moving image contents and the outside contents source relates to a provider of the digital moving image contents. In this case the receiving apparatus further comprises a display unit arranged for viewing the digital moving image contents. However, the above features are not only applicable to the moving image contents, but also widely to other digital contents, such as still image contents or text data contents.

To achieve the objects above, this invention also provides a receiving apparatus capable of receiving digital moving image contents from outside providers of the digital moving image contents comprising a manually operable unit arranged to turn on and off the receiving apparatus in response to a manual operation, a first unit arranged to designate one of the digital moving image contents in the outside provider, a second unit arranged to keep information necessary for the first unit to designate the same digital moving image content again, a third unit arranged to have the second unit keep the information when the manually

operable unit turns off the receiving apparatus and have the first unit designate the same digital moving image content again when the manually operable unit turns on the receiving apparatus afterward, a fourth unit arranged to receive the designated digital moving image content in response to the designation by the first unit, and a display unit arranged for viewing the digital moving image contents received by the fourth unit. According to the feature of this invention above, a digital moving image content which has been enjoyed when the manually operable unit turns off the receiving apparatus will be automatically designated again when the manually operable unit turns on the receiving apparatus afterward. This is considered advantageous because the digital moving image content which has been actually enjoyed when the receiving apparatus is turned off is assumed to be of the most interest if no other designation is made.

In a typical case of the above feature according to this invention, the first unit is arranged to designate the digital moving image content by means of selecting the provider, whereby the digital moving image content which is provided by the provider at the time of selection is designated.

In another typical case of the above feature according to this invention, the first unit is arranged to designate a digital moving image content provided by the provider by means of streaming technology in accordance with a program schedule table, whereby the digital moving image content is provided form a part which is provided by the provider at the time of designation.

In a still another typical case of the above feature according to this invention, the first unit is arranged to designate a part of digital moving image content, whereby the digital moving image content is provided form the part which designated by the first unit. According to a detailed feature applicable to this case, the third unit is arranged to have the second unit keep the information of a part of digital moving image content when the manually operable unit turns off the receiving apparatus and have the first unit designate a succeeding part of the same digital moving image content when the manually operable unit turns on the receiving apparatus afterward. In a further still another typical case of the above feature according to this invention, the first unit may arranged to designate an optional part of the digital moving image content in response to a manual operation.

To achieve the objects above, this invention also provides a receiving apparatus capable of receiving digital moving image contents from outside providers of the digital moving image contents comprising, a selector unit arranged to manually select one of the digital moving image contents provided in accordance with a program schedule table predetermined by the provider, a receiver unit arranged to receive the selected digital moving image content from a first part which is provided by the provider at the time of selection by the selector unit, a display unit arranged for viewing the digital moving image contents received by the receiver unit, and a controller unit arranged to make it possible for the display unit to display a second part of the same digital moving image content which has been already provided by the provider. The feature of this invention above is advantageous in such a case that a television set turning-on or channel changing operation is done by a user with any specific digital moving image content not in mind to feel interest in the content appearing on television display by chance in response to the turning-on or channel changing operation.

A typical case in which the above feature is advantageous is when the user desire to instantly view the same interested content from an optional position such as the beginning. According to a detailed feature of this invention for such a case, the controller unit is arranged to have the receiver unit receive the second part of the same digital moving image content during a slot of the program schedule table for the selected digital moving image content.

In another typical case of the above feature according to this invention, the controller includes memory unit arranged to keep information necessary for the selector to select the same digital content again.

Still another typical case in which the above feature is advantageous is when the user desire to view the same interested content afterward. According to a detailed feature of this invention for such a case, the second part memory unit is arranged to receive and store the entire data of the digital moving image content.

Other features and advantages according to this invention will be readily understood from the detailed description of the preferred embodiment in conjunction with the accompanying drawings.

The detailed description of the preferred embodiment according to this invention includes various detailed features derived from the above mentioned features. However, such detailed features are not only applicable to the above mentioned features, but also are widely and independently applicable to other objects and features. So, the above description should not be deemed to limit the scope of this invention, which should be properly determined on the basis of the attached claims.

BRIEF DESCRIPTION OF THE DRAWINGS

FIG. **1** is a block diagram showing the moving image enjoying system in whole according to a preferred embodiment of this invention.

FIG. **2** is a basic flowchart showing the function carried out by television set processor of television set computer in FIG. **1**.

FIG. **3** is a flowchart showing the detailed function of the channel changing process in step S**24** in FIG. **2**.

FIG. **4** is a flowchart showing the detailed function of the optional shift process in step S**28** in FIG. **2**.

FIG. **5** is a flowchart showing the detailed function of the recording process in step S**32** in FIG. **2**.

FIG. **6** is a flowchart showing the detailed function of the record recall process in step S**16** in FIG. **2** or in step S**62** in FIG. **3**.

FIG. **7** is a flowchart showing the detailed function of the record control process in step S**36** in FIG. **2**.

FIG. **8** is a flowchart showing a partial function carried out by server processor of server station in cooperation with television set processor of television set computer in FIG. **1**.

DETAILED DESCRIPTION OF THE PREFERRED EMBODIMENT

FIG. **1** is a block diagram showing the moving image viewing system in whole according to an embodiment of this invention. The embodiment includes television set **2** as a receiver of digital contents such as moving images, and television station **5** and server station **9** as providers of the digital contents. Television set **2** in the system includes tuner **6** for receiving a digital broadcast television program content transmitted on digital airwave **4** from television station **5**. Television set **2** also includes television set computer **10** for receiving a digital moving image program content provided by server station **9** through internet **8**. Television set

computer **10** includes television set processor **12**, memory **14** and input/output interface **16**. Input/output interface **16** serves as a receiver for inputting data of digital moving image program contents stored in data base **32** of server station **9** downloaded by way of internet **8**. Memory **14** is for storing computer programs executed by television set processor **12** and also for storing various data such as the digital moving image program contents downloaded from server station **9** by means of input/output interface **16**. Memory **14** is of such a large capacity including a hard disk as capable of storing a considerable number of digital moving image program contents.

Input/output interface **16** is further capable of input a control signal transmitted on infra red ray **20** from remote controller **18** and received by control signal receiver **22**, which is reported to television set processor **12** for necessary function. Remote controller **18** is to be manually operated for the purpose of turning on/off the main power of television set **2**, selecting channels of television stations, and adjusting the audio volume of television set **2**. Remote controller **18** further serves as a graphical user interface (GUI) in conjugation with television display **26**, in such a manner that remote controller **18** operates various visual buttons displayed on television display **26** or selects among operations in a menu displayed on television display **26**. Some signal from remote controller **18** received by control signal receiver **22** is also capable of being directly transmitted to tuner **6** on necessity. Tuner **6**, which receives a digital broadcast television program content transmitted on digital airwave **4** from television station **5** as has been mentioned above, will replace television station **5** with another television station in response to a channel selection signal of remote controller **18** directly transmitted by way of control signal receiver **22**.

Display driver **24** responsive to data signal from tuner **6** drives television display **26** to display a digital broadcast television program content on television display **26**. Display driver **24** further responsive to data signal from display memory **28** drives television display **26** to display a computer display signal transmitted by way of input/output interface **16** under control by television set processor **12**. The computer display signal is displayed on television display **26** in such a manner that the display signal is superimposed on a part of digital broadcast television program content as a GUI display in cooperation with remote controller **18**. The computer display signal may be alternatively displayed on television display **26** in such a manner that the display signal replaces the entire digital broadcast television program content as an operation menu or a broadcast program schedule table, which is to be selected by an operation at remote controller **18**. A digital broadcast television program content received by tuner **6** can also be transmitted to input/output interface **16**, and in turn stored in memory **14** in response to remote controller **18** as in the similar manner to the case of the ordinary video tape recorder.

On the other hand, a digital moving image program content provided by server station **9** through internet **8** and stored in memory **14** is converted into moving image data under the control of television set processor **12** to be transmitted to display memory **28** by way of input/output interface **16**, and in turn to display driver **24**. If display driver **24** under the control of television set processor **12** selects moving image data from display memory **28** in place of that from tuner **6**, a digital moving image program content provided by server station **9** though internet **8** is displayed on television display **26** in place of the digital broadcast television program content from television station **5**. In this case, an on-demand or live digital moving image program content can be directly provided by server station **9** and displayed on television display **26** in almost real time by means of the streaming technology. Another example of the real time digital moving image program contents provided by server station **9** though internet **8** on the streaming technology is a digital moving image program provided in accordance with a program schedule table voluntarily determined by server station **9** in a similar manner to the case of television station **5**.

As in the above, television set **2** according to the embodiment of this invention in FIG. **1** can enjoy both the digital broadcast television program contents from television station **5** on digital airwave **4** and digital moving image program contents provided by server station **9** though internet **8**. Further, television set **2** according to the embodiment of this invention in FIG. **1** can not only select between a digital moving image content on air and a digital moving image content downloaded though internet **8**, but also can combine both in advantageous manners, which will be explained in accordance with the following flow charts. For the combination in the advantageous manner, server processor **30** in server station **9** participates, the detailed explanation of which will also follow.

As has been mentioned, the digital moving image contents enjoyable on television display **26** are not only the digital moving image program contents on air by television station **5** or the digital moving image contents downloaded from server station **9** though internet **8** and stored in memory **14**, but also a real time digital moving image contents provided by server station **9** on the streaming technology. In the case of a real time digital moving image content downloaded from server station **9** through streaming technology, Uniform Resource Locator (URL) for accessing such real time digital moving image content is considered as a channel of a broadcast station provided that server station **9** is prepared to regularly provide the real time digital moving image program contents in accordance with a program schedule table similar to that by television station **5**.

FIG. **2** is a basic flowchart showing the function carried out by television set processor **12** of television set computer **10** in FIG. **1**. The flowchart starts when television set **2** is connected to the power receptacle, and it is checked in step S**2** whether or not television set **2** is turned on. If not, step S**2** is repeated to wait the power turn on operation. The "turn on operation" to be checked in step S**2** broadly means an operation to turn on the main switch or the like by a user willing to turn on television set **2**. For allowing such operation, a power switch is normally turned on in advance for making television set **2** in a standby state capable of detecting turn on operation at remote controller **18**. Accordingly, "turn on operation" should not be strictly construed to the turning on of the power switch for truly turning on the television set **2**, but is construed to include the turn on operation at remote controller **18** or the like with the power switch having been turned on in advance for the standby state.

If it is determined that television set **2** is turned on, the flow advances to step S**4** to check whether or not such a history is recorded in memory **14** that television set was turned off after television set **2** had been connected to the power receptacle. If such the record is detected in step S**4**, the flow goes to step S**6** to recall the status of television set **2** right before the latest turning-off.

Next in step S**8**, it is checked whether or not the status of television set **2** right before the latest turning-off operation

was to select a real time digital moving image content such as broadcast program. In such the case, the flow goes to step S**10** to recall the channel selected when television set **2** was turned off at the previous time. This is because that the latest channel is presumed to be of the most interested one. As has been mentioned, in the case of a real time digital moving image content downloaded at input/output interface from server station **9** through internet **8** on streaming technology, Uniform Resource Locator (URL) for accessing such real time digital moving image content is considered as the latest channel. For the purpose of enabling the above case of streaming, television set computer **10** comes into constant connection status to internet **8** in step S**11**.

The flow then goes to step S**12** for instructing display driver **24** to start displaying the digital moving image content. In the case of step S**12** following step S**10**, the digital moving image content currently on air through a channel equal to the latest one is displayed. Though control lines are omitted in FIG. **1** for the sake of simplification, tuner **6** and input/output interface **16** are controlled by television set processor **12**, respectively, for the purpose of providing display driver **24** with the necessary digital moving image contents data.

On the other hand, if it is not detected that the status of television set **2** right before the latest turning-off operation was to select a real time digital moving image content, the flow goes to step S**14** to check whether or not television set **2** was tuned off in the course of playing a digital moving image content recorded in memory **14**. In such a case, the flow goes to step S**16** to carry out record recall process in which the digital moving image content interrupted by the latest turning off operation of television set **2** is retrieved. Further in step S**18**, the position where the digital moving image content is interrupted is searched for restarting the content from the interrupted position. Step S**18** is also followed by step S**12** for instructing display driver **24** to start displaying the digital moving image content. In the case of step S**12** following step S**18**, the play of digital moving image content, which has been interrupted in the course of the play, is restarted from the interrupted position. This function is carried out automatically in response to the detection of turning-on of television set **2** at step S**2**. Thus, the user, who has put a halt to the play of the digital moving image content by turning off television set **2**, can enjoy the rest of the same digital moving image content by means of simply turning on television set **2**.

If it is not detected in step S**14** that television set **2** was tuned off in the course of playing a digital moving image content recorded in memory **14**, it means that the digital moving image content was completely enjoyed to its end and television set **2** was then turned off. In other words, there is no digital moving image content with any unfinished part to be recalled and viewed when television set **2** is turned on. So, the flow goes to step S**10** to recall the latest channel which was selected by television set **2** before selecting the digital moving image content recorded in memory **14**. By the way, if it is not detected in step S**4** that any history is recorded in memory **14** that television set was turned off after television set **2** had been connected to the power receptacle, the flow goes to step S**20** to automatically select a predetermined channel to go to step s**12**. In the absence of step S**20**, the flow would reach step S**12** without selection of channel for television set **2** to start display in response to the turning on thereof. The channel predetermined for step S**20** may have been manually or automatically selected depending on the user, or may be generally set as the default channel.

After the start of displaying the digital moving image content in step S**12**, the flow goes to step S**22** with the display continued. In step S**22**, it is checked whether or not an operation is done to change the channel selection. If such an operation is detected, the flow goes to step S**24**, in which channel selection changing process is carried out, followed by step S**26**. The channel selection changing process includes a change from a channel for broadcast program to the play of digital moving image content stored in memory **14**. The detail of channel selection changing process in step S**24** will be explained later. On the other hand, if it is not detected that any operation is done to change the channel selection, the flow directly goes to step S**26**

Step S**26** is to check whether or not such an operation is done that the position of the digital moving image content to start with is optionally shifted from the position currently displayed. The position to be optionally shifted includes the beginning of the content. If such the operation is detected in step S**26**, the flow goes to step S**28** to carry out optional shift process to realize the desired shift of position. The optional shift operation is mainly done under the condition that a real time digital moving image content on air from television station **5** or downloaded from server station **9** on streaming is displayed on television display **26** in response to the turning-on or channel change of television set **2**. In other word, the optional shift operation is expected to be done when a television set turning-on or channel changing operation is done by a user with any specific digital moving image content not in mind to feel interest in the content appearing on television display **26** by chance in response to the turning-on or channel changing operation. And, such the user may desire to instantly view the interested content from an optional position such as the beginning. The detail of optional shift process will be explained later.

On the other hand, if the optional shift operation is not detected in step S**26**, the flow goes to step S**30** to check whether or not a recording operation is done. And, if the recording operation is detected, the flow goes to step S**32** to carry out recording process. It should be noted here that the recording process **32** is to record the digital moving image content form the beginning to the end of that in contrast to the conventional recording in which the recording is done form the position of the content where the recording operation is done. The detail of the recording operation will be explained later. Also the recording operation is mainly done under the condition that a real time digital moving image content on air from television station **5** or downloaded from server station **9** on streaming is displayed on television display **26** in response to the turning-on or channel change of television set **2**. In other word, the recording operation is expected to be done when a television set turning-on or channel changing operation is done by a user with any specific digital moving image content not in mind to feel interest in the content appearing on television display **26** by chance in response to the turning-on or channel changing operation. And, such the user may desire to record the interested contents for the purpose of viewing it later from the beginning.

On the other hand, if the recording operation is not detected in step S**30**, the flow goes to step S**34** to check whether or not an operation is done to turning-off television set **2**. And, if the television set turning-off operation is detected in step S**34**, the flow goes to step S**36** to carryout recording control process, the details of which will be explained later. Further, in step S**38**, the status of television set **2** right before the turning-off is stored ins memory **14** and the turning-off of television set **2** is carried out. The flow

then goes back to step S2. Due to the function in step S38 to store the status of television set 2, various checks and functions to be carried out in steps S4 to S10 and steps S14 to S18 are made possible.

On the other hand, if the television set turning-off operation is not detected in step S34, the flow goes back to step S22 to repeat the loop of steps S22 to 26, S30 and 34 unless one of the optional shift operation, the recording operation and the television set turning-off operation is detected in one of steps S26, S30 and S34, respectively. And, during the repetition of the loop, the display on television display 26 is continued and prepared to respond to any of the channel changing operation, the optional shift operation and the recording operation.

In the case of returning from step S38 to step S2, the flow goes into the stage of waiting a next turning-on operation by repeating step 2, and the flow advances to the steps led by step S4 if the next turning-on operation is detected in step S2. It should be noted that optional shift process in step 28 and recording process in step S32 are both include a step to return to step 2, which will be explained later in detail.

FIG. 3 is a flowchart showing the detailed function of the channel changing process in step S24 in FIG. 2. If the flowchart starts, it is checked in step S42 whether or not television set computer 10 has been connected to internet 8. If not, the flow goes to step S44 to instruct the constant connection to internet 8, and advances to step S46. By this, the preparation for internet communication during the channel changing process is secured. On the other hand, if it is checked in step S42 that television set computer 10 has been connected to internet 8, the flow directly goes to step S46.

In step S46, it is checked whether or not a conventional channel for broadcast program has been selected in step S22 in FIG. 2. If it is the case, the flow goes to step S48 to direct the selected channel and advances to step S50. In step 50, it is directed to start displaying the digital moving image content, the flow then going to the end. In this case, a new channel of digital moving image content starts to be displayed, which is seemingly identical with the channel changing in the conventional television set.

On the other hand, if it is not detected in step S46 that a conventional channel for broadcast program has been selected in step S22 of FIG. 2, the flow goes to step S52, in which it is checked whether or not a "channel" of server station 9 has been selected in step S22 of FIG. 2. If it is the case, the flow goes to step S54 to direct URL relating to the server station 9. The directed URL is for directly designating data of the digital moving image content prepared by server station 9 in accordance with a program schedule table. Next in step S56, it is checked whether or not the digital moving image content for the URL is provided by live streaming. If it is the case, the flow goes to step SS58 to direct real time display and the flow goes to step S50 in which the digital moving image content starts to be displayed from a position currently provided in real time by means of the live streaming. The flow then goes to the end. Also in this case, the display in response to the channel changing operation in step S22 in FIG. 2 is seemingly identical with the channel changing to a live remote broadcast program in the conventional television set.

If it is determined in step S56 that URL directed in step S54 is not the digital moving image content provided by live streaming, the flow goes to step S60. In step S60, the beginning of the digital moving image content for the URL is directed as the point to start with. Next, the flow is advanced to step S50 for carrying out the starting of the content with its beginning, the flow then going to the end. In this case, the digital moving image content is started in step S50 with the beginning every time in response to a new selection of "channel", which is similar to the case of playing back a recorded digital moving image content. On the other hand, the series of function carried out by steps S54, S56, S60 and S50 is similar to the case of normal broadcast digital moving image content provided by television station 5 in accordance with a program schedule table in that a user cannot independently select a digital moving image content itself but can merely select a "channel" in which server station 9 exclusively determine or substitute a digital moving image content for the URL regarded as a "channel".

If it is not determined in step S52 that a "channel" of server station 9 has been selected, it means that the channel selection in step S22 of FIG. 2 is for retrieving a digital moving image content recorded in memory 14. In this case, accordingly, the flow goes from step S52 to step S62 in which record recall process is carried out, the details of step S62 being to be explained later. Next, in step S64 it is checked whether or not the retrieved digital moving image content is in such a condition that the content was interrupted in the course of playing thereof. In such a case, the flow goes to step S66 to search the position where the digital moving image content is interrupted for restarting the content from the interrupted position in step S50. This function is carried out automatically in response to the detection of a new selection of "channel". Thus, the user, who has put a halt to the play of the digital moving image content by selecting another "channel", can enjoy the rest of the same digital moving image content by means of simply select the same "channel".

On the other hand, if is not determined that the retrieved digital moving image content is in such a condition that the content was interrupted in the course of playing thereof, the flow goes to step S68 to direct the beginning of the retrieved digital moving image content as the point to start with in step S50. In this case, the user can enjoy the digital moving image content from the beginning by means of simply select a "channel". This is similar to the case of the function carried our in accordance with the flow from step S60 to step S50.

FIG. 4 is a flowchart showing the detailed function of the optional shift process in step S28 in FIG. 2. If the flowchart starts, it is checked in step S72 whether or not television set computer 10 has been connected to internet 8. If not, the flow goes to step S74 to instruct the constant connection to internet 8, and advances to step S76. By this, the preparation for internet communication during the c optional shift process is secured. On the other hand, if it is checked in step S72 that television set computer 10 has been connected to internet 8, the flow directly goes to step S76.

In step S76, it is checked whether or not the optional shift operation detected in Step S26 is done during the play of the digital moving image content recorded in memory 14. If it is the case, the flow advances to step S78, in which recorded content optional shift process is carried out. The recorded content optional shift process in step S78 is similar to well known functions for conventional picture recorder, such as the first-forward function, or the skipping function or the selection among chapters of a chaptered digital moving image content. When a position of the recorded moving image content has been determined through step S78, the flow goes to step S80 to issue a direction to start displaying the digital moving image content with the determined position, the flow then going to the end. As has been mentioned above, this function is similar to that in conventional video recorders or DVD recorders.

On the other hand, if it is not determined in step S**76** that the optional shift operation detected in Step S**26** is done during the play of the digital moving image content recorded in memory **14**, the flow goes to step S**82**. In step S**82**, it is checked whether or not the optional shift operation detected in Step S**26** is done during broadcast channel selection of television station **5**. If it is the case, the flow advances to step S**84** to direct URL of server station **9** for digital moving image content corresponding to the broadcast digital moving image program from television station **5**. For making the above function possible, both television **5** and server station **9** are providing the same digital moving image contents in cooperation. Further in step S**86**, it is checked whether or not the digital moving image content designated with URL is capable of being provided by means of streaming to go to step S**88** if streaming is possible.

In step S**88**, the digital moving image content designated by URL is divided into chapters in unit of packet or group of packets and a view format of chapters is displayed on television display **26** for facilitating the optional shift by means of a selection of the chapter with which the digital moving image content is to start. The flow advances to step S**90** with the display started in step S**88** continued. In step S**90**, it is checked whether or not a chapter is selected by means of GUI in combination of remote controller **18** and television display **26**. If chapter selection is detected in step S**90**, the flow goes to step S**92** to download the packet corresponding to the selected chapter, the digital moving image content being instantly started with the selected chapter by means of streaming in step S**80** as soon as the corresponding packet is downloaded. Thus, if a user meets a midstream of some broadcast digital moving image content provided in accordance with a scheduled program by chance of selecting a channel and gets interested in the content, the user can enjoy the content at any desirable position, including the beginning, of the content.

On the other hand, it is not determined in step S**90** that a chapter is selected, the flow goes to step s**94**, in which it is checked whether or not the time since the display started in step S**88** has past over a limit. If not, the flow returns to step S**88** to repeat steps S**88** to S**94** with the display started in step S**88** continued unless the time has past or chapter selection is detected. The case of detection of chapter selection in step S**90** has been above explained.

If it is determined in step S**94** that the time since the display started in step S**88** has past over a limit, the flow goes to step S**96** to download the packet corresponding to the beginning of the digital moving image content, the digital moving image content being instantly started with the beginning by means of streaming in step S**80** as soon as the corresponding packet is downloaded. Thus, if a user meets a midstream of some broadcast digital moving image content provided in accordance with a scheduled program by chance of selecting a channel and gets interested in the content, the user can enjoy the content from its beginning by means of simply make the optional shift operation with remote controller **18**, which is detected in step S**26** of FIG. **2** and the rest of necessary functions are all automatically carried out even if no further operation will be done.

On the other hand, if it is not determined in step S**82** that optional shift operation detected in Step S**26** is done during broadcast channel selection for television station **5**, it means that the optional shift operation detected in Step S**26** is done during URL "channel") selection for the real time digital moving image program contents provided by server station **9** though internet **8** on the streaming technology in accordance with a program schedule table voluntarily determined by server station **9** in a similar manner to the case of television station **5**. So, the flow directly goes from step S**82** to step S**88** in this case. In other word, since the URL has already determined as well as the streaming possibility has already confirmed in this case, the flow can directly goes to step S**88** with steps S**84** and S**86** omitted. The function led by step S**88** in the case of directly coming from step S**82** is identical with the case of broadcast channel selection with no additional explanation needed.

If it is not determined in step S**86** that the digital moving image content designated with URL is capable of being provided by means of streaming, the flow goes to step S**98** for hole data download process, in which the whole data necessary for playing the entirety of the digital moving image content is downloaded. And, if the download has been completed in step S**98**, the flow goes to step S**96**. In step **98** in this case, the beginning of the downloaded whole data is automatically get ready for starting in step S**80**. In other words, the content gotten by the whole data download is automatically started with the beginning since the content is not divided into chapters in unit of packet or group of packets in terms of streaming which is treated in steps S**88** and S**90**.

FIG. **5** is a flowchart showing the detailed function of the recording process in step S**32** in FIG. **2**. If the flowchart starts, it is checked in step S**102** whether or not television set computer **10** has been connected to internet **8**. If not, the flow goes to step S**104** to instruct the constant connection to internet **8**, and advances to step S**106**. By this, the preparation for internet communication during the recording process is secured. On the other hand, if it is checked in step S**102** that television set computer **10** has been connected to internet **8**, the flow directly goes to step S**106**.

In step S**106**, it is checked whether or not the recording operation detected in step S**30** in FIG. **2** has been done during conventional channel selection of broadcast program by television station **5**. If it is the case, the flow advances to step S**108** to direct URL of server station **9** for digital moving image content corresponding to the broadcast digital moving image program from television station **5**. For making the above function possible, both television **5** and server station **9** are providing the same digital moving image contents. Further in step S**110**, it is checked whether or not the digital moving image content designated with URL is capable of being provided by means of streaming to go to step S**112** if streaming is possible.

On the other hand, if it is not determined in step S**106** that the recording operation detected in Step S**30** is done during broadcast channel selection for television station **5**, the flow directly goes to step S**112**. No detection in step S**30** of the recording operation during broadcast channel selection means that the recording operation is done during enjoying digital moving image content provided by server station **9** through streaming technology since there is no such a case that the recording operation is done during the play of the digital moving image content recorded in memory **14**. Thus, the above flow is designed to directly go from step S**106** to step S**112** in this case as in the case that the streaming possibility is determined in step S**110**.

In step S**112**, an expiration date after which the digital moving image content will be no more provided is confirmed to check whether the expiration date is controllable. Here "controllable" means that server station **9** guarantees that it continues to provide the content until the expiration date without fail and also a predetermined sufficient time (e.g., one week) is left before the expiration date.

If it is confirmed that the expiration date controllable, the flow goes to step S**118** to add URL for the digital moving image content for enjoying the content from the beginning by means of streaming technology, the URL being added to a list of "recorded contents". Further in step S**120**, the URL is added to a list of "controlled contents", the flow then going to the end. In other words, if the content to be recorded is possible to be provided by streaming in the future and the expiration date is controllable, the date itself of the digital moving image content is not downloaded in response to the recording operation, but URL of the content is recorded for starting the content upon an operation for "play of recorded content" and the control of the expiration date is secured. Process of "recalling" the contents "recorded" in the above manner will be explained later.

On the other hand, if it is not determined in step S**110** that the digital moving image content designated with URL is capable of being provided by means of streaming, the flow goes to step S**122** for hole data download process, in which the whole data necessary for playing the entirety of the digital moving image content is downloaded. And, if the download has been completed in step S**122**, the flow goes to step S**124** for deleting the URL from "controlled contents", the flow then going to the end. Similarly, if it is not determined in step S**112** that the expiration date is controllable, the flow goes to step S**122** for hole data download process. And, if the download has been completed in step S**122**, the flow goes to step S**124** for deleting the URL from "controlled contents", the flow then going to the end also in this case.

FIG. **6** is a flowchart showing the detailed function of the record recall process in step S**16** in FIG. **2** or in step S**62** in FIG. **3**. If the flowchart starts, it is checked in step S**132** whether or not whole the data of the digital moving image content has been downloaded and recorded in memory **14** in compressed form. If whole the data has been downloaded, the flow goes to step S**134** to recall the compressed data from memory **14**. And it is checked in step S**136** whether or not such information is recorded that the digital moving image content has been interrupted at some position during playing the content. If it is determined in step S**136** that the information of interruption is recorded, the flow goes to step S**138** for preparing to decompress the recalled data of the content for restarting the content at the interrupted position, the flow then going to the end. On the other hand, if it is not determined in step S**136** that the information of interruption is recorded, the flow goes to step S**140** for preparing to decompress the recalled data of the content for starting the content from the beginning, the flow then going to the end also in this case.

If it is not determined in step S**132** that whole the data of the digital moving image content has been downloaded, the flow goes to step S**142** to recall URL form the list of "recorded contents". The URL is not only for designating server station **9**, but also directly identifying the digital moving image content "recorded". And it is checked in step S**144** whether or not such information is recorded that the digital moving image content has been interrupted at some position during streaming of the content. If it is determined in step S**144** that the information of interruption is recorded, the flow goes to step S**146** for identifying the packet corresponding to the interrupted position to restart the content therefrom, the flow then going to the end. On the other hand, if it is not determined in step S**144** that the information of interruption is recorded, the flow goes to step S**148** for identifying the packet corresponding to the beginning of the content to restart the content therefrom, the flow then going to the end also in this case.

The functions mentioned in steps S**138**, S**140**, S**146** and S**148** all relate to preparation of data or information necessary in the succeeding processes. In more detail, the data or information above are utilized as an object to be searched or directed in step **18** in FIG. **2** or steps S**66** or S**68** in FIG. **3** for enjoying the digital moving image contents. Further, URL's for identifying packets treated in steps S**146** and S**148** are also utilized in steps S**58** and S**60** in FIG. **3** and steps S**92** and S**96** in FIG. **4**.

FIG. **7** is a flowchart showing the detailed function of the record control process in step S**36** in FIG. **2**. The flow in FIG. **2** is for controlling URL's added to the "recorded contents" through step S**118** in FIG. **5**. If the flow starts, it is checked in step S**152** whether or not URL is recorded in the "recorded contents". If any, the flow goes to step S**154** to access all the recorded URL's one by one for confirming and updating any change in the expiration date.

Next in step S**156**, each of the updated expiration dates is compared with today's date and check whether or not any URL with uncontrollable expiration date exists. Here "uncontrollable" means that a predetermined sufficient time (e.g., one week) is no more left before the expiration date. In other words, "uncontrollable" means that whole the data of the content should be urgently download to secure it in memory **14**, otherwise there will be a risk of loosing any chance of enjoying the content afterward. If such a URL is detected in step S**156**, the flow goes to step S**158** to select one URL with the most urgent expiration date if a plurality of URL's are detected. And, the whole data of the selected URL is downloaded at hole data download process in step S**160**. And, if the download has been completed in step S**122**, the flow goes to step S**162** for deleting the URL from "controlled contents", the flow then going back to step S**156**.

In step S**156**, it is checked again whether or not any URL with uncontrollable expiration date exists among the remaining URL's. If such a URL is detected in step S**156** again, the flow goes to step S**158** again. In this manner, the loop of steps S**156** to S**162** is repeated unless no URL with uncontrollable expiration date is detected in step S**156**. On the other hand, if no URL with uncontrollable expiration date is detected in step S**156**, the flow is to instantly go to the end. Further, if it is not detected in step S**152** that URL is recorded in the "recorded contents", the flow is to instantly go to the end.

FIG. **8** is a flowchart showing a partial function carried out by server processor **30** of server station **9** in cooperation with television set processor **12** of television set computer **10** in FIG. **1**. The partial function relates to the cooperation with television server **5** and the control of expiration date for each of the digital moving image contents. Server processor **30** includes not only a central processing unit (CPU) in the narrow sense, but also various peripheral units such as communication unit which are necessary for the server though the details such units are omitted in FIG. **1**. The flowchart in FIG. **8** starts in response to the initial rise of server processor **30** so that it is checked in step S**172** whether or not new digital moving image content is uploaded for providing it through internet **8**. The "new digital moving image content" is of just the same content as that of the digital moving image content provided by television station **5** through digital airwave **4**.

If it is confirmed in step S**172** that the new digital moving image content is uploaded, the flow goes to step S**174** to provide the uploaded digital moving image content with information indicative of the tight relationship with the same

digital moving image content provided by television station **5**. Further in step S**176**, the uploaded digital moving image content is provided with information indicative of its expiration date, the flow then going to step S**178**. On the other hand, if it is not confirmed in step S**172** that the new digital moving image content is uploaded, the flow directly goes to step S**178**.

In step S**178**, it is checked whether or not time is up for one of digital moving image contents which is to be provided on time through streaming technology in accordance with a predetermined "broadcast program schedule table". If any, the flow goes to step S**180** to provide the content with "regular program URL" indicative of a slot in the "broadcast program schedule table", the flow then going to step S**182**. On the other hand, if it is not confirmed in step S**178** that time is up for any of the scheduled digital moving image content, the flow directly goes to step S**182**. Thus, if the "regular program URL", which is broadly considered as a channel of a broadcast station, is selected by television set **2** during the slot for the program, the digital moving image content is automatically provided through streaming technology by server station **9** from a packet corresponding to the time when the "regular program URL" is selected. In other words, the digital moving image content is provided through streaming technology by server station **9** in the very similar manner to that in the conventional television program provided by television station **5**. In more detail, if the "regular program URL" is selected on time of "broadcast program schedule table", the digital moving image content will be enjoyed from its beginning. In contrast to that, if the "regular program URL" is selected in midstream of the slot of "broadcast program schedule table", the digital moving image content will be enjoyed from the midstream of the content corresponding to the time.

In step S**182**, it is checked whether or not time is up for a live digital moving image content which is to be provided on time through streaming technology in accordance with a predetermined "broadcast program schedule table". If any, the flow goes to step S**184** to carry out live streaming starting process, in which live image is captured as streaming data and the provision of the captured image through streaming technology is started. Further in step S**186**, the captured live digital moving image content is provided with information indicative of its expiration date, the flow then going to step S**188**. On the other hand, if it is not confirmed in step S**182** that time is up for any live digital moving image content, the flow directly goes to step S**188**. Thus, if the URL for live streaming, which is also broadly considered as a channel of a broadcast station, is selected by television set **2** during the slot in the "broadcast program schedule table", the digital moving image content is automatically provided through streaming technology by server station **9** from a packet corresponding to the time when the URL for live streaming is selected.

In other words, the live digital moving image content is provided through streaming technology by server station **9** in the very similar manner to that in the conventional live television broadcast program provided by television station **5**. In more detail, if the URL for live streaming is selected on time of "broadcast program schedule table", the live digital moving image content will be enjoyed from its beginning. In contrast to that, if the URL for live streaming is selected in midstream of the slot of "broadcast program schedule table", the live digital moving image content will be enjoyed from the midstream of the content corresponding to the time when the URL is selected. The live digital moving image content above is kept in server station **9** until the expiration date given in step S**186**. Accordingly, if the live digital moving image content is unfortunately missed on time, it is generally possible to enjoy the content afterward. For example, if such live digital moving image content is to be rerun in accordance with "broadcast program schedule table", the content can be enjoyed by means of the function of steps S**178** and S**180** in the same manner as that of general streaming program. In case of no plan of rerun in accordance with "broadcast program schedule table", it is still possible to enjoy the missed content until its expiration date by mean of "archive function" explained later.

In step S**188**, it is checked whether or not any streaming digital moving image content has been provided acting on in accordance with the "broadcast program schedule table". If any, the flow goes to step S**190** to provide the content with a specific URL indicative of "archive" digital moving image content, the flow then going to step S**192**. On the other hand, if it is not confirmed in step S**188** that any streaming digital moving image content has been provided acting on in accordance with the "broadcast program schedule table", the flow directly goes to step S**192**. The digital moving image content provided with the "archive" URL corresponds to a digital moving image content which is not planned to be provided acting on "broadcast program schedule table", but is merely kept for provision on demand when the content is designated with the "archive" URL in accordance with a selection or search into the archive list. The digital moving image content with the "archive" URL can also be provided when the "archive" URL is designated through any of the functions in FIG. **4** to FIG. **6**.

In step S**192**, it is checked whether or not the expiration date for any digital moving image content is reached. If any, the flow goes to step S**194** to delete the digital moving image content from the archive of server station **9**. Further, in step S**196**, the URL given to the deleted content is also cancelled, the flow then going to step S**198**. On the other hand, if it is not confirmed in step S**192** that the expiration date for any digital moving image content is reached, the flow directly goes to step S**198**.

In step S**198**, it is checked whether or not a regular maintenance date for server station **9** has come to go to the end if it is the case. On the other hand, if it is not confirmed in step S**198** that the regular maintenance date for server station **9** has come, the flow goes back to step S**172** to repeat steps S**172** to S**198** unless the maintenance date is detected in step S**198**. The repetition of steps S**172** to S**198** achieves control of various digital moving image contents in data base **32** of server station **9** in reacting on various changes caused during the repetitions.

In the above description, the "regular program URL" for digital moving image content provided by servers station **9** is broadly considered as a "channel" of a broadcast station such as television station **5**. In other words, the provision of digital moving image content by server station **9** through streaming technology is achieved in the very similar manner to that in the conventional television program provided by television station **5**. In the same sense, television station **5** can be broadly considered as a "provider" of digital moving image contents in such a case that the "regular program URL" for digital moving image content provided by server station **9** is broadly considered as a "channel" for television station **5**.

Various features of this invention are not only applicable to the above embodiment, but also widely to other embodiments. For example, the feature of control of the expiration date of the contents and the automatic download of the contents data explained in FIG. **5** through FIG. **8** are not

applicable to the case of digital moving image contents data, but also widely to other contents data such as still image contents data or text data. In more detail in the case of obtaining content data through internet, download of the content data itself may not be actually carried out provided that the expiration date of the content data on the server is securely confirmed. Instead in this case, information such as "book mark" necessary for accessing again the content data is merely recorded so that actual download is to be automatically carried out when the expiration date comes close or becomes unclear. According to this application, redundant download of content data can be saved or avoided and at the same time such inexpediency is overcome that "book marked" content data has been deleted when the data is accessed again for actual download or review.

What is claimed is:

1. A receiving apparatus configured to receive digital moving image contents from a provider of the digital moving image contents, the provider being commutatively connected to the receiving apparatus, the receiving apparatus comprising:

a processor executing instructions to designate a part of the digital moving image contents in the provider automatically or in response to a manual operation;

a memory that keeps information necessary for the processor to automatically designate a succeeding part of the digital moving image contents to a viewed part of the digital moving image contents;

a designation software controller configured to control the memory to keep the information in response to a termination of viewing the viewed part and control the processor to automatically designate the succeeding part of the digital moving image contents when the viewing starts again;

a receiver of the designated succeeding part of the digital moving image contents in response to the designation by the processor; and

a display configured to display the succeeding part of the digital moving image contents received by the receiver.

2. The receiving apparatus according to claim **1**, wherein the processor is configured to designate the part of the digital moving image contents by selecting the provider, wherein the part of the digital moving image contents is provided by the selected provider.

3. The receiving apparatus according to claim **1**, wherein the processor is configured to designate a part of the digital moving image contents provided by the provider by streaming technology in accordance with a program schedule table.

4. The receiving apparatus according to claim **1**, wherein the processor is configured to designate an optional part of the digital moving image contents in response to the manual operation.

5. A receiving method configured to receive digital moving image contents from a provider of the digital moving image contents, the receiving method comprising:

a step of executing, by a computer processor, instructions to designate a part of the digital moving image contents in the provider automatically or in response to a manual operation;

a step of keeping information necessary for the executing step to automatically designate a succeeding part of the digital moving image contents to a viewed part of the digital moving image contents;

a step of controlling the keeping step to keep the information in response to a termination of viewing the viewed part and control the executing step to automatically designate the succeeding part of the digital moving image contents when the viewing starts again;

a step of receiving the designated succeeding part of the digital moving image contents in response to the designation by the executing step; and

a step of displaying the succeeding part of the digital moving image contents received by the receiving step.

6. The receiving method according to claim **5**, wherein the executing step is configured to designate the part of the digital moving image contents by selecting the provider, wherein the part of the digital moving image contents is provided by the selected provider.

7. The receiving method according to claim **5**, wherein the executing step is configured to designate a part of the digital moving image contents provided by the provider by streaming technology in accordance with a program schedule table.

8. The receiving method according to claim **5**, wherein the receiving method is further configured to designate an optional part of the digital moving image contents in response to the manual operation.

9. A receiving system configured to receive digital moving image contents from a provider of the digital moving image contents, the provider being commutatively connected to the receiving system, the receiving system comprising:

a processor executing instructions to designate a part of the digital moving image contents from the provider automatically or in response to a manual operation;

a memory that keeps information necessary for the processor to automatically designate a succeeding part of the digital moving image contents to a viewed part of the digital moving image contents;

a designation software controller configured to control the memory to keep the information in response to a termination of viewing the viewed part and control the processor to automatically designate a succeeding part of the digital moving image contents when the viewing starts again;

a receiver of the designated succeeding part of the digital moving image contents in response to the designation by the processor; and

a display configured to display the succeeding part of the digital moving image contents received by the receiver.

10. The receiving system according to claim **9**, wherein the processor is configured to designate the part of the digital moving image contents by selecting the provider, wherein the part of the digital moving image contents is provided by the selected provider.

11. The receiving system according to claim **9**, wherein the processor is configured to designate a part of the digital moving image contents provided by the provider by streaming technology in accordance with a program schedule table.

12. The receiving system according to claim **9**, wherein the processor is configured to designate an optional part of the digital moving image contents in response to the manual operation.

* * * * *