(12) INTERNATIONAL APPLICATION PUBLISHED UNDER THE PATENT COOPERATION TREATY (PCT)

(19) World Intellectual Property Organization
International Bureau

(43) International Publication Date
27 May 2004 (27.05.2004)

PCT

(10) International Publication Number
WO 2004/044820 A1

(51) International Patent Classification[7]: G06F 21/00, G11B 20/00, 27/11

(21) International Application Number: PCT/IB2003/004894

(22) International Filing Date: 31 October 2003 (31.10.2003)

(25) Filing Language: English

(26) Publication Language: English

(30) Priority Data:
02079720.5 12 November 2002 (12.11.2002) EP

(71) Applicant *(for all designated States except US)*: **KONINKLIJKE PHILIPS ELECTRONICS N.V.** [NL/NL]; Groenewoudseweg 1, NL-5621 BA Eindhoven (NL).

(72) Inventors; and
(75) Inventors/Applicants *(for US only)*: **SEO, Jin, S.** [KR/KR]; Prof . Holstlaan 6, NL-5656 AA Eindhoven (NL). **HAITSMA, Jaap, A.** [NL/NL]; Prof . Holstlaan 6, NL-5656 AA Eindhoven (NL). **KALKER, Antonius, A., C., M.** [NL/NL]; Prof. Holstlaan 6, NL-5656 AA Eindhoven (NL).

(74) Agent: **SCHMITZ, Herman, J., R.**; Philips Intellectual Property & Standards, Prof. Holstlaan 6, NL-5656 AA Eindhoven (NL).

(81) Designated States *(national)*: AE, AG, AL, AM, AT, AU, AZ, BA, BB, BG, BR, BY, BZ, CA, CH, CN, CO, CR, CU, CZ, DE, DK, DM, DZ, EC, EE, EG, ES, FI, GB, GD, GE, GH, GM, HR, HU, ID, IL, IN, IS, JP, KE, KG, KP, KR, KZ, LC, LK, LR, LS, LT, LU, LV, MA, MD, MG, MK, MN, MW, MX, MZ, NI, NO, NZ, OM, PG, PH, PL, PT, RO, RU, SC, SD, SE, SG, SK, SL, SY, TJ, TM, TN, TR, TT, TZ, UA, UG, US, UZ, VC, VN, YU, ZA, ZM, ZW.

(84) Designated States *(regional)*: ARIPO patent (BW, GH, GM, KE, LS, MW, MZ, SD, SL, SZ, TZ, UG, ZM, ZW), Eurasian patent (AM, AZ, BY, KG, KZ, MD, RU, TJ, TM), European patent (AT, BE, BG, CH, CY, CZ, DE, DK, EE, ES, FI, FR, GB, GR, HU, IE, IT, LU, MC, NL, PT, RO, SE, SI, SK, TR), OAPI patent (BF, BJ, CF, CG, CI, CM, GA, GN, GQ, GW, ML, MR, NE, SN, TD, TG).

Published:
— *with international search report*

For two-letter codes and other abbreviations, refer to the "Guidance Notes on Codes and Abbreviations" appearing at the beginning of each regular issue of the PCT Gazette.

(54) Title: FINGERPRINTING MULTIMEDIA CONTENTS

(57) Abstract: Disclosed is a method and arrangement for extracting a fingerprint from a multimedia signal, particularly an audio signal, which is invariant to speed changes of the audio signal. To this end, the method comprises extracting (12,13) a set of robust perceptual features from the multimedia signal, for example, the power spectrum of the audio signal. A Fourier-Mellin transform (15) converts the power spectrum into Fourier coefficients that undergo a phase change only if the audio playback speed changes. Their magnitudes or phase differences (16) constitute a speed change-invariant fingerprint. By a thresholding operation (19), the fingerprint can be represented by a compact number of bits.

WO 2004/044820 A1

AMR EX. 2026
Samsung v AMR
IPR2024-01348

Fingerprinting multimedia contents

FIELD OF THE INVENTION

The invention relates to a method and arrangement for extracting a fingerprint from a multimedia signal.

BACKGROUND OF THE INVENTION

Fingerprints, in the literature sometimes referred to as hashes or signatures, are binary sequences extracted from multimedia contents, which can be used to identify said contents. Unlike cryptographic hashes of data files (which change as soon as a single bit of the data file changes), fingerprints of multimedia contents (audio, images, video) are to a certain extent invariant to processing such as compression and D/A & A/D conversion. This is generally achieved by extracting the fingerprint from perceptually essential features of the contents.

A prior-art method of extracting a fingerprint from a multimedia signal is disclosed in International Patent Application WO 02/065782. The method comprises the steps of extracting a set of robust perceptual features from the multimedia signal, and converting the set of features into the fingerprint. For audio signals, the perceptual features are energies of the audio contents in selected sub-bands. For image signals, the perceptual features are average luminances of blocks into which the image is divided. The conversion into a binary sequence is performed by thresholding, for example, by comparing each feature sample with its neighbors.

An attractive application of fingerprinting is content identification. The artist and title of a music song or video clip can be identified by extracting a fingerprint from an excerpt of the unknown material and sending it to a large database of fingerprints in which said information is stored.

Experiments have shown that the prior-art method of extracting fingerprints from an audio signal is very robust against almost all commonly used audio processing operations, such as MP3 compression and decompression, equalization, re-sampling, noise addition, and D/A & A/D conversion.

It is quite common for radio stations to speed up audio by a few percent. They supposedly do this for two reasons. First, the duration of songs is then shorter and therefore it enables them to broadcast more commercials. Secondly, the beat of the song is faster and the audience seems to prefer this. The speed changes typically lie between zero and four percent.

Speed changes of audio material cause misalignment in both the temporal and the frequency domain. The prior-art fingerprint extraction method does not suffer from misalignment in the temporal domain, because the fingerprint is a concatenation of small sub-fingerprints being extracted from overlapping audio frames. A speed change of, say 2%, merely causes the 250th sub-fingerprint of an excerpt to be extracted at the position of the 255th sub-fingerprint of the corresponding original excerpt.

Misalignment in the frequency domain is caused by spectral energies shifting to other frequencies. The above example of 2% speedup causes all audio frequencies to increase by 2%. In the prior-art audio fingerprint extraction method, this causes the energies in the selected sub-bands (and thus the fingerprint) to be changed. As a result thereof, the fingerprints can no longer be found in a database, unless a plurality of fingerprints corresponding to different speed versions is stored in the database for each song.

Similar considerations apply to image and video material and to other kinds of perceptual features being used for fingerprint extraction.

OBJECT AND SUMMARY OF THE INVENTION

It is an object of the invention to provide an improved method and arrangement for extracting a fingerprint from multimedia contents. It is a particular object of the invention to provide a method and arrangement for extracting a fingerprint from an audio signal that is substantially invariant to speed changes of the audio signal.

To this end, the method of extracting a fingerprint from a multimedia signal according to the invention comprises the steps of: extracting a set of robust perceptual features from the multimedia signal; subjecting the extracted set of features to a Fourier-Mellin transform; and converting the transformed set of features into a sequence constituting the fingerprint.

The invention exploits the insight that the Fourier-Mellin transform consists of a log mapping and a Fourier transform. The log mapping converts scaling of the energy spectrum due to a speed change in a shift. The subsequent Fourier transform converts the shift into a phase change which is the same for all Fourier coefficients. Magnitudes of the Fourier coefficients are not affected by the speed change. A fingerprint derived from the

magnitude or from the derivative of the phase of the Fourier coefficients is thus invariant to speed changes.

BRIEF DESCRIPTION OF THE DRAWINGS

Fig. 1 shows schematically an arrangement for extracting a fingerprint from a multimedia signal or, equivalently, the corresponding steps of a method of extracting such a fingerprint according to the invention.

Figs. 2 and 3 show diagrams to illustrate the operation of a log mapping circuit, which is shown in Fig. 1.

DESCRIPTION OF EMBODIMENTS

The invention will be described with reference to an arrangement for extracting a fingerprint from an audio signal. Fig. 1 shows schematically such an arrangement according to the invention.

The arrangement comprises a framing circuit **11**, which divides the audio signal into overlapping frames of approx. 0.4 seconds and an overlap factor of 31/32. The overlap is to be chosen such that a high correlation between sub-fingerprints of subsequent frames is obtained. Prior to the division into frames, the audio signal has been limited to a frequency range of approx. 300Hz-3kHz and down-sampled (not shown), so that each frame comprises 2048 samples.

A Fourier transform circuit **12** computes the spectral representation of every frame. In the next block **13**, the power spectrum of the audio frame is computed, for example, by squaring the magnitudes of the (complex) Fourier coefficients. For each frame of 2048 audio signal samples, the power spectrum is represented by 1024 samples (positive and corresponding negative frequencies have the same magnitudes). The samples of the power spectrum constitute a set of robust perceptual features. The spectrum is not substantially affected by operations such as D/A & A/D conversion or MP3 compression.

After calculating the power spectrum, an optional normalization circuit **14** applies local normalization to the power spectrum. Such a normalization (which includes de-convolution and filtering) improves the performance as it obtains a more decisive and robust representation of the power spectrum. Local normalization preserves the important characteristics of the spectrum and is robust against all kinds of audio processing including local modifications of the audio spectrum, such as equalization. The most promising approach is to emphasize the tonal part of the spectrum by normalizing it with its local mean.

Mathematically, the normalized spectrum N(ω) is obtained by dividing the spectrum A(ω) by its local mean Lm(ω) as follows:

$$N(\omega) = \frac{A(\omega)}{Lm(\omega)}$$

The local mean can be calculated in various ways, for example:

$$Lm(\omega) = \frac{1}{2\delta}\int_{\omega-\delta}^{\omega+\delta} A(\tau)d\tau \text{ (arithmetic mean), or}$$

$$Lm(\omega) = \exp\left[\frac{1}{2\delta}\int_{\omega-\delta}^{\omega+\delta} \log A(\tau)d\tau\right] \text{ (geometric mean) and so on.}$$

The normalized spectrum remains invariant to equalization. Moreover, tonal information is directly related to human hearing and well preserved after most of the audio processing. The importance of tonal information is widely accepted and has been utilized in audio recognition and bit allocation of audio compression. Although local normalization has many advantages, the normalization is not consistent after compression if there are no tonal components between ω-δ and ω+δ. To mitigate this effect, integration over time and a total-energy term is added to Lm(ω). Then a modified local mean Lm'(ω) is given as follows:

$$Lm'(\omega) = \frac{1}{2\delta}\int_{t-\Delta}^{t}\int_{\omega-\delta}^{\omega+\delta} A(\tau)d\tau + \alpha\int_{t-\Delta}^{t}\int_{-\infty}^{\infty} A(\tau)d\tau$$

where Δ and α are constants, which are determined experimentally. Integration over time makes the normalization more consistent, and the total-energy term limits the increase of small non-tonal components after normalization.

The invention resides in the application of a Fourier-Mellin transform **15** to the power spectrum to achieve speed change resilience. The Fourier-Mellin transform consists of a log mapping process **151** and a Fourier transform (or inverse Fourier transform) **152**.

Figs. 2 and 3 show diagrams to illustrate the log mapping operation. In Fig. 2, reference numeral **21** denotes the samples of the power spectrum of an audio frame as supplied by the Fourier transform **12** in the case that the audio signal is being played back at normal speed. For the sake of convenience, a smooth power spectrum in the range 300-3,000Hz is shown. In reality, the spectrum will generally exhibit a jagged outline. Reference numeral **22** in Fig. 2 denotes the power spectrum of the same audio frame in the

case that the audio signal is being played back at an increased speed. As can be seen in the Figure, the speed change causes the power spectrum to be scaled.

Fig. 3 shows the corresponding power spectra as computed by the log mapping circuit **151**. The power spectrum now represents the energy of the audio frame in a selected number of successive logarithmically spaced sub-bands. Reference numeral **31** denotes the log mapped power spectrum for the audio signal being played back at normal speed. Reference numeral **32** denotes the log-mapped power spectrum for the audio signal being played back at the increased speed.

The process of log mapping can be carried out in several ways. In the embodiment, which is shown in Fig. 3, the input power spectrum is interpolated and re-sampled at logarithmically spaced intervals. In another embodiment (not shown), the samples within logarithmically spaced (and sized) sub-bands of the input power spectrum are accumulated to provide respective samples of the log-mapped power spectrum.

The number of samples representing the log-mapped power spectrum is chosen to be such that subsequent operations can be carried out with sufficient precision. In a practical embodiment, the log-mapped power spectrum is represented by 512 samples. It will be appreciated from inspection of Fig. 3 that the log-mapping operation translates the scaling (**21→22**) of the power spectrum due to the speed change into a shift (**31→32**). As long as the playback speed of the audio signal does not change within the frame period (which is a reasonable assumption in practice), the shift is the same for all coefficients.

The subsequent Fourier transform **152** translates said shift into a change of the phase of the complex Fourier coefficients. The phase change is the same for all coefficients. Thus, if the speed of the audio signal changes, the phases of all Fourier coefficients computed by Fourier transform circuit **152** change by an identical amount. In other words, the magnitudes of the coefficients as well as their phase differences are invariant to speed changes. They are calculated in a computing circuit **16**. As the magnitudes and phase differences are the same for positive and negative frequencies, the number of unique values is 256.

The vector of 256 magnitudes or phase differences representing the log-mapped power spectrum of an audio frame is hereinafter denoted F(k,n), where k=1..256 and n is the audio frame number. In fact, the vector constitutes a speed change-invariant fingerprint. However, the number of values is large, and each value requires a multi-bit representation in a digital fingerprinting system. The number of bits to represent the fingerprint can be reduced by selecting the lowest-order values only. This is performed by a

selection circuit **17**. It has been found that the 32 lowest values (the most significant coefficients) provide a sufficiently accurate representation of the log-mapped power spectrum.

The number of bits can be further reduced by subjecting the selected magnitudes or phase differences to values to a thresholding process. In a simple embodiment, a thresholding stage **19** generates one bit for each feature sample, for example, a '1' if the value F(k,n) is above a threshold and a '0' if it is below said threshold. Alternatively, a fingerprint bit is given the value '1' if the corresponding feature sample F(k,n) is larger than its neighbor, otherwise it is '0'. To this end, the feature samples F(k,n) are first filtered in a one-dimensional temporal filter **18**. The present embodiment uses an improved version of the latter alternative. In this preferred embodiment, a fingerprint bit '1' is generated if the feature sample F(k,n) is larger than its neighbor and if this was also the case in the previous frame, otherwise the fingerprint bit is '0'. In this embodiment, the filter **18** is a two-dimensional filter. In mathematical notation:

$$FP(k,n) = \begin{cases} 1 & \text{if } F(k,n) - F(k+1,n) - (F(k,n-1) - F(k+1,n-1)) > 0 \\ 0 & \text{if } F(k,n) - F(k+1,n) - (F(k,n-1) - F(k+1,n-1)) \leq 0 \end{cases}$$

When thresholding is used, each sub-fingerprint being extracted from an audio frame has 32 bits.

Although the invention has been described with reference to audio fingerprinting, it can also be applied to other multimedia signals such as images and motion video. While speed changes are often applied to audio signals, affine transformations such as shift, scaling and rotation, are often applied to images and video. The method according to the invention can be used to improve robustness to such affine transformations. In the case of a two-dimensional signal, the log-mapping process **151** is changed into log-polar mapping to make it invariant against rotation as well as scaling (retaining aspect ratio). A log-log mapping makes it invariant to changes of the aspect ratio. The magnitude of the Fourier-Mellin transform (now a 2D transform) and double differentiation of its phase along the frequency axis have the desired affine invariant property.

Disclosed is a method and arrangement for extracting a fingerprint from a multimedia signal, particularly an audio signal, which is invariant to speed changes of the audio signal. To this end, the method comprises extracting (12,13) a set of robust perceptual features from the multimedia signal, for example, the power spectrum of the audio signal. A Fourier-Mellin transform (15) converts the power spectrum into Fourier coefficients that undergo a phase change only if the audio playback speed changes. Their magnitudes or phase

differences (16) constitute a speed change-invariant fingerprint. By a thresholding operation (19), the fingerprint can be represented by a compact number of bits.

CLAIMS:

1. A method of extracting a fingerprint from a multimedia signal, comprising the steps of:

- extracting (12,13) a set of robust perceptual features from the multimedia signal;
- subjecting (15) the extracted set of features to a Fourier-Mellin transform;
- converting (16,19) the transformed set of features into a sequence constituting the fingerprint.

2. A method as claimed in claim 1, wherein said converting step includes converting (16,ABS) the magnitudes of the Fourier-Mellin transform.

3. A method as claimed in claim 1, wherein said converting step includes converting (16,$\Delta\varphi$) the derivative of the phase of the Fourier-Mellin transform.

4. A method as claimed in claim 1, wherein the multimedia signal is an audio signal and said Fourier-Mellin transform includes a one-dimensional log mapping process being applied to the set of perceptual features.

5. A method as claimed in claim 1, wherein the multimedia signal is an image or video signal and said Fourier-Mellin transform includes a two-dimensional log-polar mapping process being applied to the set of perceptual features.

6. A method as claimed in claim 1, wherein the multimedia signal is an image or video signal and said Fourier-Mellin transform includes a two-dimensional log-log mapping process being applied to the set of perceptual features.

7. A method as claimed in claim 1, wherein said extracting step includes normalization of the set of perceptual features.

8. An apparatus for extracting a fingerprint from a multimedia signal, comprising:

- means (12,13) for extracting a set of robust perceptual features from the multimedia signal;
- means (15) for subjecting the extracted set of features to a Fourier-Mellin transform;
- means (16,19) for converting the transformed set of features into a sequence constituting the fingerprint.

1/2

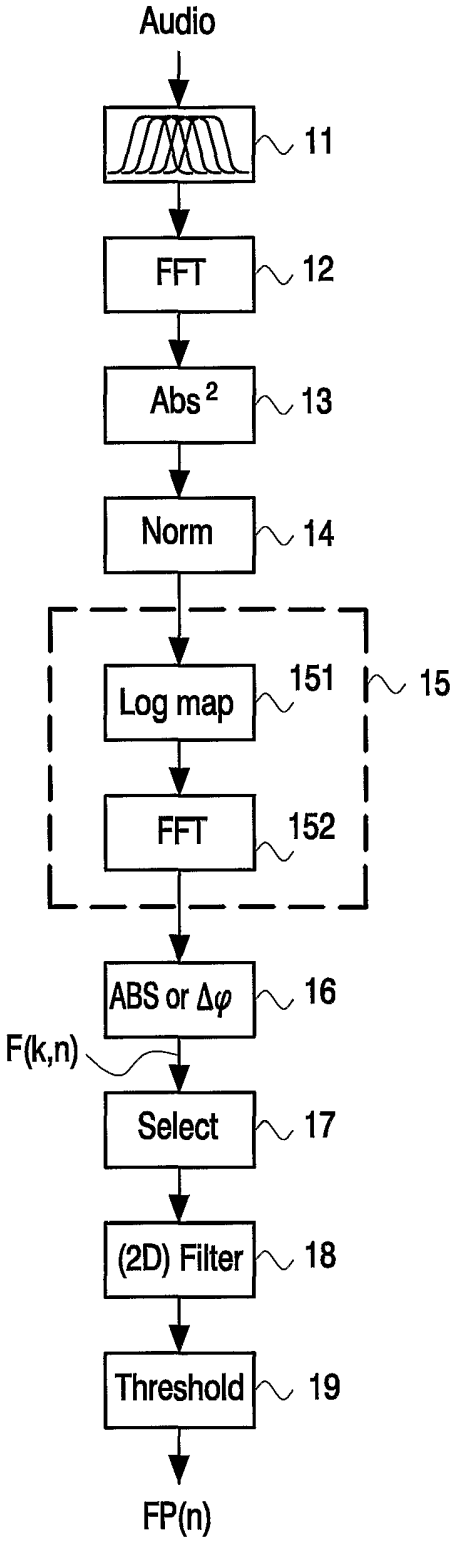
Audio
11
FFT
12
Abs 2
13
Norm
14
Log map
151
15
FFT
152
ABS or Δφ
16
F(k,n)
Select
17
(2D) Filter
18
Threshold
19
FP(n)

FIG. 1

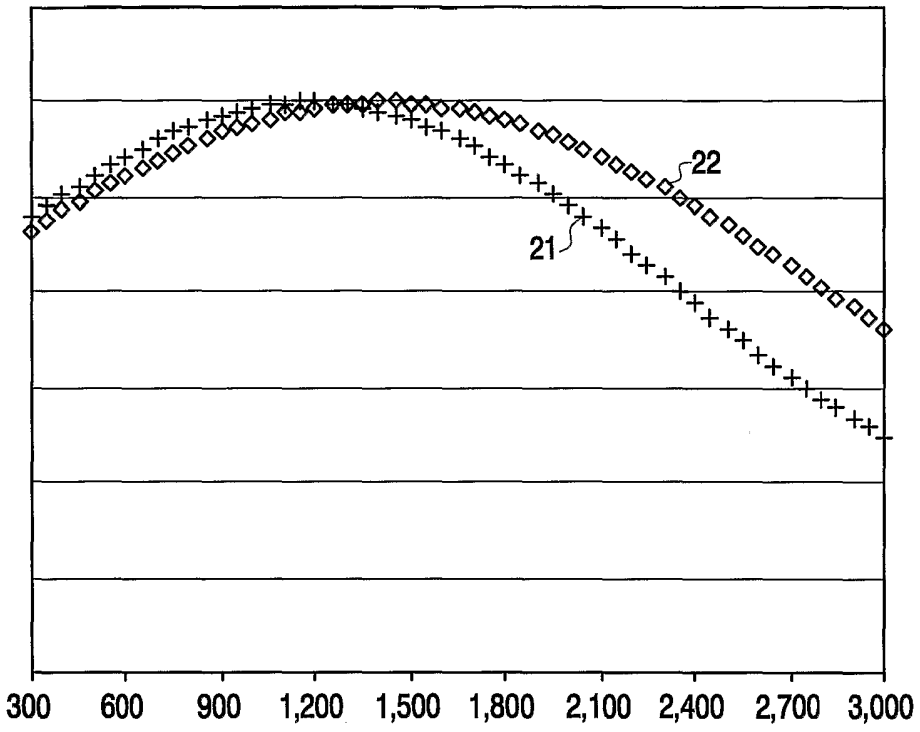
22
21
300
600
900
1,200
1,500
1,800
2,100
2,400
2,700
3,000

FIG. 2

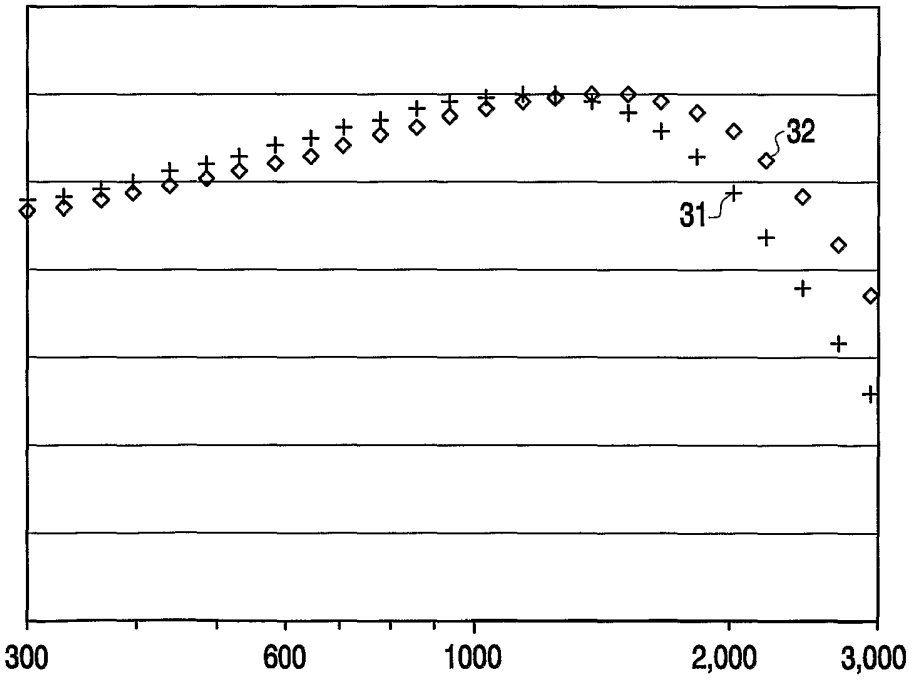
32
31
300
600
1000
2,000
3,000

FIG. 3

INTERNATIONAL SEARCH REPORT

Intern ial Application No
PCT/IB 03/04894

A. CLASSIFICATION OF SUBJECT MATTER
IPC 7 G06F21/00 G11B20/00 G11B27/11

According to International Patent Classification (IPC) or to both national classification and IPC

B. FIELDS SEARCHED

Minimum documentation searched (classification system followed by classification symbols)
IPC 7 G06F G11B

Documentation searched other than minimum documentation to the extent that such documents are included in the fields searched

Electronic data base consulted during the international search (name of data base and, where practical, search terms used)

EPO-Internal, INSPEC

C. DOCUMENTS CONSIDERED TO BE RELEVANT

Category °	Citation of document, with indication, where appropriate, of the relevant passages	Relevant to claim No.
X	QIN-SHENG CHEN ET AL: "SYMMETRIC PHASE-ONLY MATCHED FILTERING OF FOURIER-MELLIN TRANSFORMSFOR IMAGE REGISTRATION AND RECOGNITION" IEEE TRANSACTIONS ON PATTERN ANALYSIS AND MACHINE INTELLIGENCE, IEEE INC., vol. 16, no. 12, 1 December 1994 (1994-12-01), pages 1156-1168, XP000486818 NEW YORK, US ISSN: 0162-8828	1,3,7,8
Y	the whole document	2,4-6

-/--

[X] Further documents are listed in the continuation of box C.

[X] Patent family members are listed in annex.

° Special categories of cited documents:

"A" document defining the general state of the art which is not considered to be of particular relevance
"E" earlier document but published on or after the international filing date
"L" document which may throw doubts on priority claim(s) or which is cited to establish the publication date of another citation or other special reason (as specified)
"O" document referring to an oral disclosure, use, exhibition or other means
"P" document published prior to the international filing date but later than the priority date claimed

"T" later document published after the international filing date or priority date and not in conflict with the application but cited to understand the principle or theory underlying the invention
"X" document of particular relevance; the claimed invention cannot be considered novel or cannot be considered to involve an inventive step when the document is taken alone
"Y" document of particular relevance; the claimed invention cannot be considered to involve an inventive step when the document is combined with one or more other such documents, such combination being obvious to a person skilled in the art.
"&" document member of the same patent family

Date of the actual completion of the international search	Date of mailing of the international search report
12 February 2004	03/03/2004
Name and mailing address of the ISA European Patent Office, P.B. 5818 Patentlaan 2 NL - 2280 HV Rijswijk Tel. (+31-70) 340-2040, Tx. 31 651 epo nl, Fax: (+31-70) 340-3016	Authorized officer Quélavoine, R

1

Form PCT/ISA/210 (second sheet) (July 1992)

INTERNATIONAL SEARCH REPORT

International Application No
PCT/IB 03/04894

C.(Continuation) DOCUMENTS CONSIDERED TO BE RELEVANT

Category °	Citation of document, with indication, where appropriate, of the relevant passages	Relevant to claim No.
Y	PEREIRA S ET AL: "Template based recovery of Fourier-based watermarks using log-polar and log-log maps" PROCEEDINGS OF ICMCS99, 7 June 1999 (1999-06-07), - 11 June 1999 (1999-06-11) pages 870-874, XP002270096 FLORENCE, ITALY ISBN: 0-7695-0253-9 abstract	2,4-6
A	FLETCHER P A ET AL: "Direct embedding and detection of RST invariant watermarks" INFORMATION HIDING. 5TH INTERNATIONAL WORKSHOP, IH 2002, 7 October 2002 (2002-10-07), - 9 October 2002 (2002-10-09) pages 129-144, XP0001188234 BERLIN, GERMANY ISBN: 3-540-00421-1 abstract * section 2.2 Homogeneous Functions *	1-3,8
A	LIN C -Y ET AL: "Rotation, scale, and translation resilient watermarking for images" IEEE TRANSACTIONS ON IMAGE PROCESSING, vol. 10, no. 5, May 2001 (2001-05), pages 767-782, XP002270097 USA ISSN: 1057-7149 abstract page 768, left-hand column, last paragraph - right-hand column, paragraph 1	1-3,5,7, 8
A	WO 02/065782 A (OOSTVEEN JOB CORNELIS ET AL) 22 August 2002 (2002-08-22) cited in the application abstract	1,7,8

1

Form PCT/ISA/210 (continuation of second sheet) (July 1992)

INTERNATIONAL SEARCH REPORT

International Application No
PCT/IB 03/04894

Patent document cited in search report	Publication date	Patent family member(s)	Publication date
WO 02065782 A	22-08-2002	CN 1461565 T	10-12-2003
		EP 1362485 A1	19-11-2003
		WO 02065782 A1	22-08-2002
		US 2002178410 A1	28-11-2002

Form PCT/ISA/210 (patent family annex) (July 1992)