UNITED STATES PATENT AND TRADEMARK OFFICE

UNITED STATES DEPARTMENT OF COMMERCE
United States Patent and Trademark Office
Address: COMMISSIONER FOR PATENTS
P.O. Box 1450
Alexandria, Virginia 22313-1450
www.uspto.gov

APPLICATION NO.	ISSUE DATE	PATENT NO.	ATTORNEY DOCKET NO.	CONFIRMATION NO.
16/403,204	02/25/2020	10572896	10004-2000116	1048

51417 7590 02/05/2020
Mauriel Kapouytian Woods LLP
15 W. 26th Street
7th Floor
New York, NY 10010

ISSUE NOTIFICATION

The projected patent number and issue date are specified above.

Determination of Patent Term Adjustment under 35 U.S.C. 154 (b)
(application filed on or after May 29, 2000)

The Patent Term Adjustment is 0 day(s). Any patent to issue from the above-identified application will include an indication of the adjustment on the front page.

If a Continued Prosecution Application (CPA) was filed in the above-identified application, the filing date that determines Patent Term Adjustment is the filing date of the most recent CPA.

Applicant will be able to obtain more detailed information by accessing the Patent Application Information Retrieval (PAIR) WEB site (http://pair.uspto.gov).

Any questions regarding the Patent Term Extension or Adjustment determination should be directed to the Office of Patent Legal Administration at (571)-272-7702. Questions relating to issue and publication fee payments should be directed to the Application Assistance Unit (AAU) of the Office of Data Management (ODM) at (571)-272-4200.

APPLICANT(s) (Please see PAIR WEB site http://pair.uspto.gov for additional applicants):

Jonathan S. Steuer, New York, NY;
Anonymous Media Research, LLC, New York, NY;
Christopher W. Otto, San Francisco, CA;

The United States represents the largest, most dynamic marketplace in the world and is an unparalleled location for business investment, innovation, and commercialization of new technologies. The USA offers tremendous resources and advantages for those who invest and manufacture goods here. Through SelectUSA, our nation works to encourage and facilitate business investment. To learn more about why the USA is the best country in the world to develop technology, manufacture products, and grow your business, visit SelectUSA.gov.

IR103 (Rev. 10/09)

SAMSUNG EXHIBIT 1015

UNITED STATES PATENT AND TRADEMARK OFFICE

UNITED STATES DEPARTMENT OF COMMERCE
United States Patent and Trademark Office
Address: COMMISSIONER FOR PATENTS
P.O. Box 1450
Alexandria, Virginia 22313-1450
www.uspto.gov

APPLICATION NO.	FILING DATE	FIRST NAMED INVENTOR	ATTORNEY DOCKET NO.	CONFIRMATION NO.
16/403,204	05/03/2019	Jonathan S. Steuer	10004-2000116	1048

51417 7590 01/31/2020
Mauriel Kapouytian Woods LLP
15 W. 26th Street
7th Floor
New York, NY 10010

EXAMINER
DAVIS, CHENEA

ART UNIT	PAPER NUMBER
2421	

NOTIFICATION DATE	DELIVERY MODE
01/31/2020	ELECTRONIC

Please find below and/or attached an Office communication concerning this application or proceeding.

The time period for reply, if any, is set in the attached communication.

Notice of the Office communication was sent electronically on above-indicated "Notification Date" to the following e-mail address(es):

docket@mkwllp.com

PTOL-90A (Rev. 04/07)

Response to Rule 312 Communication	Application No.	Applicant(s)	
	16/403,204	Steuer et al.	
	Examiner	**Art Unit**	**AIA (FITF) Status**
	CHENEA DAVIS	2421	No

-- The MAILING DATE of this communication appears on the cover sheet with the correspondence address --

1. ☑ The amendment filed on 03 January 2020 under 37 CFR 1.312 has been considered, and has been:

a) ☑ entered.

b) ☐ entered as directed to matters of form not affecting the scope of the invention.

c) ☐ disapproved because the amendment was filed after the payment of the issue fee.

Any amendment filed after the date the issue fee is paid must be accompanied by a petition under 37 CFR 1.313(c)(1) and the required fee to withdraw the application from issue.

d) ☐ disapproved. See explanation below.

e) ☐ entered in part. See explanation below.

/CHENEA DAVIS/ Primary Examiner, Art Unit 2421	

Please Enter
/C.D./

Attorney Docket No.: 10004-2000116
(PATENT)

IN THE UNITED STATES PATENT AND TRADEMARK OFFICE

First Named Inventor: Jonathan S. Steuer

Application No.: 16/403,204 Group Art Unit: 2421

Filing Date: May 3, 2019 Examiner: Davis, Chenea

Title: MEDIA USAGE MONITORING AND MEASUREMENT SYSTEM AND METHOD

AMENDMENT UNDER 37 CFR § 1.312

Mail Stop Issue Fee
Commissioner for Patents
P.O. Box 1450
Alexandria, Virginia 22313-1450

Dear Sir:

This is in response to the Notice of Allowance dated December 18, 2019.

Amendments to the Claims begin on page 2 of this paper.

Remarks begin on page 6 of this paper.

Attorney Docket No.: 10004-2000116
(PATENT)

IN THE UNITED STATES PATENT AND TRADEMARK OFFICE

First Named Inventor: Jonathan S. Steuer

Application No.: 16/403,204 Group Art Unit: 2421

Filing Date: May 3, 2019 Examiner: Davis, Chenea

Title: MEDIA USAGE MONITORING AND MEASUREMENT SYSTEM AND METHOD

AMENDMENT UNDER 37 CFR § 1.312

Mail Stop Issue Fee
Commissioner for Patents
P.O. Box 1450
Alexandria, Virginia 22313-1450

Dear Sir:

This is in response to the Notice of Allowance dated December 18, 2019.

Amendments to the Claims begin on page 2 of this paper.

Remarks begin on page 6 of this paper.

AMENDMENTS TO THE CLAIMS

Please amend the claims as follows, where additions are underlined and deletions are indicated by ~~strikethrough~~ or enclosed in [[double brackets]]:

1. (Currently Amended) A media measurement method comprising:

using one or more computers to generate a play stream of content identification results corresponding to a sequence of submitted data samples, the submitted data samples corresponding to video data samples captured at a monitoring device associated with a monitored audience member;[[and]]

using one or more computers to utilize sample sequence data and content offset data to deduce play-altering actions of the monitored audience member, the sample sequence data corresponding to a sequence of the content identification results, the content offset data including content offsets associated with the content identification results, a content offset indicating a time position of a content identification result within identified content, wherein to utilize comprises, for a particular plurality of submitted data samples and corresponding content identification results, comparing a progression of log times associated with capture timing of each of the particular plurality of submitted data samples and a progression of content offsets of the corresponding content identification results; and

using one or more computers to utilize deduced play altering actions of the monitored audience member to generate a media measurement report.

2. (Cancelled)

3. (Previously Presented) The method of claim 1 further comprising:

generating a play list including content offset data as part of deducing media play-altering actions of a monitored audience member.

4. (Previously Presented) The method of claim 1 further comprising:

utilizing sample sequence data together with corresponding channel data to deduce play-altering actions of a monitored audience member.

5. (Previously Presented) The media measurement method of claim 1 wherein a clean play list is generated including deduced play-altering actions.

6. (Previously Presented) The media measurement method of claim 1 wherein the play stream is a raw play stream.

7. (Previously Presented) The media measurement method of claim 1 wherein the play stream is a clean play stream.

8. (Previously Presented) The method of claim 1 wherein to utilize further comprises determining if one or more discontinuities exist in the progression of content offsets.

9. (Previously Presented) The method of claim 1 wherein the content offset data is derived from a comparison conducted by a computerized content identification system comparing the submitted data samples against known content such that content offset data is obtainable without using time codes accompanying the captured video data samples.

10. (Previously Presented) A media measurement method comprising:

using one or more computers to generate a play stream of content identification results corresponding to a sequence of submitted data samples, the submitted data samples corresponding to video data samples captured at a monitoring device associated with a monitored audience member;

using one or more computers to utilize sample sequence data and content offset data to deduce play-altering actions of the monitored audience member, the sample sequence data corresponding to a sequence of the content identification results, wherein play-altering actions include actions that alter at least one of a pace and a sequence of a media stream, the content offset data including content offsets associated with the content identification results, a content offset indicating a time position of a content identification result within identified content, wherein to utilize comprises, for a particular plurality of submitted data samples and corresponding content identification results, comparing a progression of log times associated with capture timing of each of the particular plurality of submitted data samples and a progression of content offsets of the corresponding content identification results; and

using one or more computers to utilize deduced play altering actions of the monitored audience member to generate a media measurement report.

11. (Previously Presented) The method of claim 10 wherein play-altering actions include at least one of fast forwarding, rewinding, and pausing a media stream.

12. (Previously Presented) The method of claim 10 wherein play-altering actions include at least one of skipping forward and skipping backward in a media stream.

13. (Previously Presented) The method of claim 10 wherein at least one of a play list and a play stream is generated, by one or more computers, including content offset data as part of deducing media play-altering actions of a monitored audience member.

14. (Previously Presented) The method of claim 13 wherein the at least one of a play stream and play list including content offset data comprises the play stream of content identification results.

REMARKS

This is in response to the Notice of Allowance dated December 18, 2019. The Issue Fee is submitted concurrently herewith.

Claims 1 and 3-14 are allowed.

Claim 1 is amended herein to correct a minor typographical error. Because the substance and scope of the claims remains unchanged, no additional search is believed to be required.

Amendment and cancellation of certain claims is not to be construed as a dedication to the public of any of the subject matter of the claims as previously presented. No new matter has been added. Entry of the above-mentioned amendments is respectfully requested.

CONCLUSION

In view of the above, each of the presently pending claims in this application is believed to be in immediate condition for allowance. Accordingly, the Examiner is respectfully requested to withdraw the outstanding rejection of the claims and to pass this application to issue. If it is determined that a telephone conversation would expedite the prosecution of this application, the Examiner is invited to telephone the undersigned at the number given below.

If the Patent Office determines that an extension of time and/or other relief is required and such required relief has not already been requested, Applicant hereby petitions for any such required relief including extensions of time. The Director is hereby authorized to charge any fees which may be required by this paper to Deposit Account No. 50-4242, referencing docket no. 10004-2000116.

Dated: January 3, 2020

Respectfully submitted,

By /Lawrence Gabuzda/

Lawrence Gabuzda
Registration No. 51,711
Mauriel Kapouytian Woods LLP
15 W. 26th Street, 7th Floor
New York, New York 10010
(212) 524-6052
Attorney(s) for Applicant

PART B - FEE(S) TRANSMITTAL

Complete and send this form, together with applicable fee(s), by mail or fax, or via EFS-Web.

By mail, send to: Mail Stop ISSUE FEE
Commissioner for Patents
P.O. Box 1450
Alexandria, Virginia 22313-1450

By fax, send to: (571)-273-2885

INSTRUCTIONS: This form should be used for transmitting the ISSUE FEE and PUBLICATION FEE (if required). Blocks 1 through 5 should be completed where appropriate. All further correspondence including the Patent, advance orders and notification of maintenance fees will be mailed to the current correspondence address as indicated unless corrected below or directed otherwise in Block 1, by (a) specifying a new correspondence address; and/or (b) indicating a separate "FEE ADDRESS" for maintenance fee notifications.

CURRENT CORRESPONDENCE ADDRESS (Note: Use Block 1 for any change of address)

51417 7590 12/18/2019
Mauriel Kapouytian Woods LLP
15 W. 26th Street
7th Floor
New York, NY 10010

Note: A certificate of mailing can only be used for domestic mailings of the Fee(s) Transmittal. This certificate cannot be used for any other accompanying papers. Each additional paper, such as an assignment or formal drawing, must have its own certificate of mailing or transmission.

Certificate of Mailing or Transmission

I hereby certify that this Fee(s) Transmittal is being deposited with the United States Postal Service with sufficient postage for first class mail in an envelope addressed to the Mail Stop ISSUE FEE address above, or being transmitted to the USPTO via EFS-Web or by facsimile to (571) 273-2885, on the date below.

(Typed or printed name)

(Signature)

(Date)

APPLICATION NO.	FILING DATE	FIRST NAMED INVENTOR	ATTORNEY DOCKET NO.	CONFIRMATION NO.
16/403,204	05/03/2019	Jonathan S. Steuer	10004-2000116	1048

TITLE OF INVENTION: MEDIA USAGE MONITORING AND MEASUREMENT SYSTEM AND METHOD

APPLN. TYPE	ENTITY STATUS	ISSUE FEE DUE	PUBLICATION FEE DUE	PREV. PAID ISSUE FEE	TOTAL FEE(S) DUE	DATE DUE
nonprovisional	SMALL	$500	$0.00	$0.00	$500	03/18/2020

EXAMINER	ART UNIT	CLASS-SUBCLASS
DAVIS, CHENEA	2421	725-018000

1. Change of correspondence address or indication of "Fee Address" (37 CFR 1.363).

☐ Change of correspondence address (or Change of Correspondence Address form PTO/SB/122) attached.

☐ "Fee Address" indication (or "Fee Address" Indication form PTO/SB/47; Rev 03-09 or more recent) attached. **Use of a Customer Number is required.**

2. For printing on the patent front page, list
(1) The names of up to 3 registered patent attorneys or agents OR, alternatively,
(2) The name of a single firm (having as a member a registered attorney or agent) and the names of up to 2 registered patent attorneys or agents. If no name is listed, no name will be printed.

1 Mauriel Kapouytian Woods LLP
2 Lawrence Gabuzda
3 Michael Mauriel

3. ASSIGNEE NAME AND RESIDENCE DATA TO BE PRINTED ON THE PATENT (print or type)

PLEASE NOTE: Unless an assignee is identified below, no assignee data will appear on the patent. If an assignee is identified below, the document must have been previously recorded, or filed for recordation, as set forth in 37 CFR 3.11 and 37 CFR 3.81(a). Completion of this form is NOT a substitute for filing an assignment.

(A) NAME OF ASSIGNEE: Anonymous Media Research LLC

(B) RESIDENCE: (CITY and STATE OR COUNTRY): New York, NY

Please check the appropriate assignee category or categories (will not be printed on the patent) : ☐ Individual ☒ Corporation or other private group entity ☐ Government

4a. Fees submitted: ☒ Issue Fee ☐ Publication Fee (if required) ☐ Advance Order - # of Copies _____

4b. Method of Payment: *(Please first reapply any previously paid fee shown above)*

☒ Electronic Payment via EFS-Web ☐ Enclosed check ☐ Non-electronic payment by credit card (Attach form PTO-2038)

☒ The Director is hereby authorized to charge the required fee(s), any deficiency, or credit any overpayment to Deposit Account No. 50-4242

5. **Change in Entity Status** (from status indicated above)

☐ Applicant certifying micro entity status. See 37 CFR 1.29

☐ Applicant asserting small entity status. See 37 CFR 1.27

☐ Applicant changing to regular undiscounted fee status.

NOTE: Absent a valid certification of Micro Entity Status (see forms PTO/SB/15A and 15B), issue fee payment in the micro entity amount will not be accepted at the risk of application abandonment.
NOTE: If the application was previously under micro entity status, checking this box will be taken to be a notification of loss of entitlement to micro entity status.
NOTE: Checking this box will be taken to be a notification of loss of entitlement to small or micro entity status, as applicable.

NOTE: This form must be signed in accordance with 37 CFR 1.31 and 1.33. See 37 CFR 1.4 for signature requirements and certifications.

Authorized Signature /Lawrence Gabuzda/ Date January 3, 2020

Typed or printed name Lawrence Gabuzda Registration No. 51,711

Electronic Patent Application Fee Transmittal

Application Number:	16403204
Filing Date:	03-May-2019
Title of Invention:	MEDIA USAGE MONITORING AND MEASUREMENT SYSTEM AND METHOD
First Named Inventor/Applicant Name:	Jonathan S. Steuer
Filer:	Lawrence R. Gabuzda/Emily Sullenberger
Attorney Docket Number:	10004-2000116

Filed as Small Entity

Filing Fees for Utility under 35 USC 111(a)

Description	Fee Code	Quantity	Amount	Sub-Total in USD($)
Basic Filing:				
Pages:				
Claims:				
Miscellaneous-Filing:				
Petition:				
Patent-Appeals-and-Interference:				
Post-Allowance-and-Post-Issuance:				
UTILITY APPL ISSUE FEE	2501	1	500	500

Description	Fee Code	Quantity	Amount	Sub-Total in USD($)
Extension-of-Time:				
Miscellaneous:				
			Total in USD ($)	**500**

Electronic Acknowledgement Receipt	
EFS ID:	38200221
Application Number:	16403204
International Application Number:	
Confirmation Number:	1048
Title of Invention:	MEDIA USAGE MONITORING AND MEASUREMENT SYSTEM AND METHOD
First Named Inventor/Applicant Name:	Jonathan S. Steuer
Customer Number:	51417
Filer:	Lawrence R. Gabuzda/Emily Sullenberger
Filer Authorized By:	Lawrence R. Gabuzda
Attorney Docket Number:	10004-2000116
Receipt Date:	03-JAN-2020
Filing Date:	03-MAY-2019
Time Stamp:	17:28:27
Application Type:	Utility under 35 USC 111(a)

Payment information:

Submitted with Payment	yes
Payment Type	EFT
Payment was successfully received in RAM	$500
RAM confirmation Number	E202013H29260070
Deposit Account	504242
Authorized User	Emily Sullenberger
The Director of the USPTO is hereby authorized to charge indicated fees and credit any overpayment as follows: 37 CFR 1.19 (Document supply fees) 37 CFR 1.20 (Post Issuance fees)	

37 CFR 1.21 (Miscellaneous fees and charges)

File Listing:

Document Number	Document Description	File Name	File Size(Bytes)/ Message Digest	Multi Part /.zip	Pages (if appl.)
1		10004-2000116Sec312Amendment.pdf	107399 d1adeef1b6ad4d24b1ecdfc11e694c661f5887bf	yes	7

Multipart Description/PDF files in .zip description		
Document Description	**Start**	**End**
Amendment after Notice of Allowance (Rule 312)	1	1
Claims	2	5
Applicant Arguments/Remarks Made in an Amendment	6	7

Warnings:

Information:

2	Issue Fee Payment (PTO-85B)	10004-2000116IssueFeeTransmittal.pdf	198411 929530c8580db50d2e2d6b14e29283c5a9d18de6	no	1

Warnings:

Information:

3	Fee Worksheet (SB06)	fee-info.pdf	30361 bf9d114bb8f0b6aa397201b46edf78a871697ea8	no	2

Warnings:

Information:

Total Files Size (in bytes):	336171

This Acknowledgement Receipt evidences receipt on the noted date by the USPTO of the indicated documents, characterized by the applicant, and including page counts, where applicable. It serves as evidence of receipt similar to a Post Card, as described in MPEP 503.

New Applications Under 35 U.S.C. 111
If a new application is being filed and the application includes the necessary components for a filing date (see 37 CFR 1.53(b)-(d) and MPEP 506), a Filing Receipt (37 CFR 1.54) will be issued in due course and the date shown on this Acknowledgement Receipt will establish the filing date of the application.
National Stage of an International Application under 35 U.S.C. 371
If a timely submission to enter the national stage of an international application is compliant with the conditions of 35 U.S.C. 371 and other applicable requirements a Form PCT/DO/EO/903 indicating acceptance of the application as a national stage submission under 35 U.S.C. 371 will be issued in addition to the Filing Receipt, in due course.
New International Application Filed with the USPTO as a Receiving Office
If a new international application is being filed and the international application includes the necessary components for an international filing date (see PCT Article 11 and MPEP 1810), a Notification of the International Application Number and of the International Filing Date (Form PCT/RO/105) will be issued in due course, subject to prescriptions concerning national security, and the date shown on this Acknowledgement Receipt will establish the international filing date of the application.

UNITED STATES PATENT AND TRADEMARK OFFICE

UNITED STATES DEPARTMENT OF COMMERCE
United States Patent and Trademark Office
Address: COMMISSIONER FOR PATENTS
P.O. Box 1450
Alexandria, Virginia 22313-1450
www.uspto.gov

NOTICE OF ALLOWANCE AND FEE(S) DUE

51417 7590 12/18/2019
Mauriel Kapouytian Woods LLP
15 W. 26th Street
7th Floor
New York, NY 10010

EXAMINER
DAVIS, CHENEA

ART UNIT	PAPER NUMBER
2421	

DATE MAILED: 12/18/2019

APPLICATION NO.	FILING DATE	FIRST NAMED INVENTOR	ATTORNEY DOCKET NO.	CONFIRMATION NO.
16/403,204	05/03/2019	Jonathan S. Steuer	10004-2000116	1048

TITLE OF INVENTION: MEDIA USAGE MONITORING AND MEASUREMENT SYSTEM AND METHOD

APPLN. TYPE	ENTITY STATUS	ISSUE FEE DUE	PUBLICATION FEE DUE	PREV. PAID ISSUE FEE	TOTAL FEE(S) DUE	DATE DUE
nonprovisional	SMALL	$500	$0.00	$0.00	$500	03/18/2020

THE APPLICATION IDENTIFIED ABOVE HAS BEEN EXAMINED AND IS ALLOWED FOR ISSUANCE AS A PATENT. PROSECUTION ON THE MERITS IS CLOSED. THIS NOTICE OF ALLOWANCE IS NOT A GRANT OF PATENT RIGHTS. THIS APPLICATION IS SUBJECT TO WITHDRAWAL FROM ISSUE AT THE INITIATIVE OF THE OFFICE OR UPON PETITION BY THE APPLICANT. SEE 37 CFR 1.313 AND MPEP 1308.

THE ISSUE FEE AND PUBLICATION FEE (IF REQUIRED) MUST BE PAID WITHIN THREE MONTHS FROM THE MAILING DATE OF THIS NOTICE OR THIS APPLICATION SHALL BE REGARDED AS ABANDONED. THIS STATUTORY PERIOD CANNOT BE EXTENDED. SEE 35 U.S.C. 151. THE ISSUE FEE DUE INDICATED ABOVE DOES NOT REFLECT A CREDIT FOR ANY PREVIOUSLY PAID ISSUE FEE IN THIS APPLICATION. IF AN ISSUE FEE HAS PREVIOUSLY BEEN PAID IN THIS APPLICATION (AS SHOWN ABOVE), THE RETURN OF PART B OF THIS FORM WILL BE CONSIDERED A REQUEST TO REAPPLY THE PREVIOUSLY PAID ISSUE FEE TOWARD THE ISSUE FEE NOW DUE.

HOW TO REPLY TO THIS NOTICE:

I. Review the ENTITY STATUS shown above. If the ENTITY STATUS is shown as SMALL or MICRO, verify whether entitlement to that entity status still applies.

If the ENTITY STATUS is the same as shown above, pay the TOTAL FEE(S) DUE shown above.

If the ENTITY STATUS is changed from that shown above, on PART B - FEE(S) TRANSMITTAL, complete section number 5 titled "Change in Entity Status (from status indicated above)".

For purposes of this notice, small entity fees are 1/2 the amount of undiscounted fees, and micro entity fees are 1/2 the amount of small entity fees.

II. PART B - FEE(S) TRANSMITTAL, or its equivalent, must be completed and returned to the United States Patent and Trademark Office (USPTO) with your ISSUE FEE and PUBLICATION FEE (if required). If you are charging the fee(s) to your deposit account, section "4b" of Part B - Fee(s) Transmittal should be completed and an extra copy of the form should be submitted. If an equivalent of Part B is filed, a request to reapply a previously paid issue fee must be clearly made, and delays in processing may occur due to the difficulty in recognizing the paper as an equivalent of Part B.

III. All communications regarding this application must give the application number. Please direct all communications prior to issuance to Mail Stop ISSUE FEE unless advised to the contrary.

IMPORTANT REMINDER: Maintenance fees are due in utility patents issuing on applications filed on or after Dec. 12, 1980. It is patentee's responsibility to ensure timely payment of maintenance fees when due. More information is available at www.uspto.gov/PatentMaintenanceFees.

PART B - FEE(S) TRANSMITTAL

Complete and send this form, together with applicable fee(s), by mail or fax, or via EFS-Web.

By mail, send to: Mail Stop ISSUE FEE
Commissioner for Patents
P.O. Box 1450
Alexandria, Virginia 22313-1450

By fax, send to: (571)-273-2885

INSTRUCTIONS: This form should be used for transmitting the ISSUE FEE and PUBLICATION FEE (if required). Blocks 1 through 5 should be completed where appropriate. All further correspondence including the Patent, advance orders and notification of maintenance fees will be mailed to the current correspondence address as indicated unless corrected below or directed otherwise in Block 1, by (a) specifying a new correspondence address; and/or (b) indicating a separate "FEE ADDRESS" for maintenance fee notifications.

CURRENT CORRESPONDENCE ADDRESS (Note: Use Block 1 for any change of address)

51417 7590 12/18/2019
Mauriel Kapouytian Woods LLP
15 W. 26th Street
7th Floor
New York, NY 10010

Note: A certificate of mailing can only be used for domestic mailings of the Fee(s) Transmittal. This certificate cannot be used for any other accompanying papers. Each additional paper, such as an assignment or formal drawing, must have its own certificate of mailing or transmission.

Certificate of Mailing or Transmission

I hereby certify that this Fee(s) Transmittal is being deposited with the United States Postal Service with sufficient postage for first class mail in an envelope addressed to the Mail Stop ISSUE FEE address above, or being transmitted to the USPTO via EFS-Web or by facsimile to (571) 273-2885, on the date below.

(Typed or printed name)

(Signature)

(Date)

APPLICATION NO.	FILING DATE	FIRST NAMED INVENTOR	ATTORNEY DOCKET NO.	CONFIRMATION NO.
16/403,204	05/03/2019	Jonathan S. Steuer	10004-2000116	1048

TITLE OF INVENTION: MEDIA USAGE MONITORING AND MEASUREMENT SYSTEM AND METHOD

APPLN. TYPE	ENTITY STATUS	ISSUE FEE DUE	PUBLICATION FEE DUE	PREV. PAID ISSUE FEE	TOTAL FEE(S) DUE	DATE DUE
nonprovisional	SMALL	$500	$0.00	$0.00	$500	03/18/2020

EXAMINER	ART UNIT	CLASS-SUBCLASS
DAVIS, CHENEA	2421	725-018000

1. Change of correspondence address or indication of "Fee Address" (37 CFR 1.363).

❑ Change of correspondence address (or Change of Correspondence Address form PTO/SB/122) attached.

❑ "Fee Address" indication (or "Fee Address" Indication form PTO/SB/47; Rev 03-09 or more recent) attached. **Use of a Customer Number is required.**

2. For printing on the patent front page, list
(1) The names of up to 3 registered patent attorneys or agents OR, alternatively,
(2) The name of a single firm (having as a member a registered attorney or agent) and the names of up to 2 registered patent attorneys or agents. If no name is listed, no name will be printed.

1_____
2_____
3_____

3. ASSIGNEE NAME AND RESIDENCE DATA TO BE PRINTED ON THE PATENT (print or type)

PLEASE NOTE: Unless an assignee is identified below, no assignee data will appear on the patent. If an assignee is identified below, the document must have been previously recorded, or filed for recordation, as set forth in 37 CFR 3.11 and 37 CFR 3.81(a). Completion of this form is NOT a substitute for filing an assignment.

(A) NAME OF ASSIGNEE (B) RESIDENCE: (CITY and STATE OR COUNTRY)

Please check the appropriate assignee category or categories (will not be printed on the patent) : ❑ Individual ❑ Corporation or other private group entity ❑ Government

4a. Fees submitted: ❑Issue Fee ❑Publication Fee (if required) ❑Advance Order - # of Copies _____

4b. Method of Payment: *(Please first reapply any previously paid fee shown above)*

❑ Electronic Payment via EFS-Web ❑ Enclosed check ❑ Non-electronic payment by credit card (Attach form PTO-2038)

❑ The Director is hereby authorized to charge the required fee(s), any deficiency, or credit any overpayment to Deposit Account No. _____

5. **Change in Entity Status** (from status indicated above)

❑ Applicant certifying micro entity status. See 37 CFR 1.29

❑ Applicant asserting small entity status. See 37 CFR 1.27

❑ Applicant changing to regular undiscounted fee status.

NOTE: Absent a valid certification of Micro Entity Status (see forms PTO/SB/15A and 15B), issue fee payment in the micro entity amount will not be accepted at the risk of application abandonment.
NOTE: If the application was previously under micro entity status, checking this box will be taken to be a notification of loss of entitlement to micro entity status.
NOTE: Checking this box will be taken to be a notification of loss of entitlement to small or micro entity status, as applicable.

NOTE: This form must be signed in accordance with 37 CFR 1.31 and 1.33. See 37 CFR 1.4 for signature requirements and certifications.

Authorized Signature _____ Date _____

Typed or printed name _____ Registration No. _____

UNITED STATES PATENT AND TRADEMARK OFFICE

UNITED STATES DEPARTMENT OF COMMERCE
United States Patent and Trademark Office
Address: COMMISSIONER FOR PATENTS
P.O. Box 1450
Alexandria, Virginia 22313-1450
www.uspto.gov

APPLICATION NO.	FILING DATE	FIRST NAMED INVENTOR	ATTORNEY DOCKET NO.	CONFIRMATION NO.
16/403,204	05/03/2019	Jonathan S. Steuer	10004-2000116	1048

51417 7590 12/18/2019
Mauriel Kapouytian Woods LLP
15 W. 26th Street
7th Floor
New York, NY 10010

EXAMINER
DAVIS, CHENEA

ART UNIT	PAPER NUMBER
2421	

DATE MAILED: 12/18/2019

Determination of Patent Term Adjustment under 35 U.S.C. 154 (b)
(Applications filed on or after May 29, 2000)

The Office has discontinued providing a Patent Term Adjustment (PTA) calculation with the Notice of Allowance.

Section 1(h)(2) of the AIA Technical Corrections Act amended 35 U.S.C. 154(b)(3)(B)(i) to eliminate the requirement that the Office provide a patent term adjustment determination with the notice of allowance. See Revisions to Patent Term Adjustment, 78 Fed. Reg. 19416, 19417 (Apr. 1, 2013). Therefore, the Office is no longer providing an initial patent term adjustment determination with the notice of allowance. The Office will continue to provide a patent term adjustment determination with the Issue Notification Letter that is mailed to applicant approximately three weeks prior to the issue date of the patent, and will include the patent term adjustment on the patent. Any request for reconsideration of the patent term adjustment determination (or reinstatement of patent term adjustment) should follow the process outlined in 37 CFR 1.705.

Any questions regarding the Patent Term Extension or Adjustment determination should be directed to the Office of Patent Legal Administration at (571)-272-7702. Questions relating to issue and publication fee payments should be directed to the Customer Service Center of the Office of Patent Publication at 1-(888)-786-0101 or (571)-272-4200.

OMB Clearance and PRA Burden Statement for PTOL-85 Part B

The Paperwork Reduction Act (PRA) of 1995 requires Federal agencies to obtain Office of Management and Budget approval before requesting most types of information from the public. When OMB approves an agency request to collect information from the public, OMB (i) provides a valid OMB Control Number and expiration date for the agency to display on the instrument that will be used to collect the information and (ii) requires the agency to inform the public about the OMB Control Number's legal significance in accordance with 5 CFR 1320.5(b).

The information collected by PTOL-85 Part B is required by 37 CFR 1.311. The information is required to obtain or retain a benefit by the public which is to file (and by the USPTO to process) an application. Confidentiality is governed by 35 U.S.C. 122 and 37 CFR 1.14. This collection is estimated to take 30 minutes to complete, including gathering, preparing, and submitting the completed application form to the USPTO. Time will vary depending upon the individual case. Any comments on the amount of time you require to complete this form and/or suggestions for reducing this burden, should be sent to the Chief Information Officer, U.S. Patent and Trademark Office, U.S. Department of Commerce, P.O. Box 1450, Alexandria, Virginia 22313-1450. DO NOT SEND FEES OR COMPLETED FORMS TO THIS ADDRESS. SEND TO: Commissioner for Patents, P.O. Box 1450, Alexandria, Virginia 22313-1450. Under the Paperwork Reduction Act of 1995, no persons are required to respond to a collection of information unless it displays a valid OMB control number.

Privacy Act Statement

The Privacy Act of 1974 (P.L. 93-579) requires that you be given certain information in connection with your submission of the attached form related to a patent application or patent. Accordingly, pursuant to the requirements of the Act, please be advised that: (1) the general authority for the collection of this information is 35 U.S.C. 2(b)(2); (2) furnishing of the information solicited is voluntary; and (3) the principal purpose for which the information is used by the U.S. Patent and Trademark Office is to process and/or examine your submission related to a patent application or patent. If you do not furnish the requested information, the U.S. Patent and Trademark Office may not be able to process and/or examine your submission, which may result in termination of proceedings or abandonment of the application or expiration of the patent.

The information provided by you in this form will be subject to the following routine uses:

1. The information on this form will be treated confidentially to the extent allowed under the Freedom of Information Act (5 U.S.C. 552) and the Privacy Act (5 U.S.C 552a). Records from this system of records may be disclosed to the Department of Justice to determine whether disclosure of these records is required by the Freedom of Information Act.
2. A record from this system of records may be disclosed, as a routine use, in the course of presenting evidence to a court, magistrate, or administrative tribunal, including disclosures to opposing counsel in the course of settlement negotiations.
3. A record in this system of records may be disclosed, as a routine use, to a Member of Congress submitting a request involving an individual, to whom the record pertains, when the individual has requested assistance from the Member with respect to the subject matter of the record.
4. A record in this system of records may be disclosed, as a routine use, to a contractor of the Agency having need for the information in order to perform a contract. Recipients of information shall be required to comply with the requirements of the Privacy Act of 1974, as amended, pursuant to 5 U.S.C. 552a(m).
5. A record related to an International Application filed under the Patent Cooperation Treaty in this system of records may be disclosed, as a routine use, to the International Bureau of the World Intellectual Property Organization, pursuant to the Patent Cooperation Treaty.
6. A record in this system of records may be disclosed, as a routine use, to another federal agency for purposes of National Security review (35 U.S.C. 181) and for review pursuant to the Atomic Energy Act (42 U.S.C. 218(c)).
7. A record from this system of records may be disclosed, as a routine use, to the Administrator, General Services, or his/her designee, during an inspection of records conducted by GSA as part of that agency's responsibility to recommend improvements in records management practices and programs, under authority of 44 U.S.C. 2904 and 2906. Such disclosure shall be made in accordance with the GSA regulations governing inspection of records for this purpose, and any other relevant (i.e., GSA or Commerce) directive. Such disclosure shall not be used to make determinations about individuals.
8. A record from this system of records may be disclosed, as a routine use, to the public after either publication of the application pursuant to 35 U.S.C. 122(b) or issuance of a patent pursuant to 35 U.S.C. 151. Further, a record may be disclosed, subject to the limitations of 37 CFR 1.14, as a routine use, to the public if the record was filed in an application which became abandoned or in which the proceedings were terminated and which application is referenced by either a published application, an application open to public inspection or an issued patent.
9. A record from this system of records may be disclosed, as a routine use, to a Federal, State, or local law enforcement agency, if the USPTO becomes aware of a violation or potential violation of law or regulation.

Notice of Allowability	Application No. 16/403,204	Applicant(s) Steuer et al.	
	Examiner CHENEA DAVIS	Art Unit 2421	AIA (FITF) Status No

-- The MAILING DATE of this communication appears on the cover sheet with the correspondence address--

All claims being allowable, PROSECUTION ON THE MERITS IS (OR REMAINS) CLOSED in this application. If not included herewith (or previously mailed), a Notice of Allowance (PTOL-85) or other appropriate communication will be mailed in due course. **THIS NOTICE OF ALLOWABILITY IS NOT A GRANT OF PATENT RIGHTS.** This application is subject to withdrawal from issue at the initiative of the Office or upon petition by the applicant. See 37 CFR 1.313 and MPEP 1308.

1. ☑ This communication is responsive to 10/29/19.
   ☐ A declaration(s)/affidavit(s) under **37 CFR 1.130(b)** was/were filed on _____.

2. ☐ An election was made by the applicant in response to a restriction requirement set forth during the interview on _____; the restriction requirement and election have been incorporated into this action.

3. ☑ The allowed claim(s) is/are 1 and 3-14 . As a result of the allowed claim(s), you may be eligible to benefit from the **Patent Prosecution Highway** program at a participating intellectual property office for the corresponding application. For more information , please see **http://www.uspto.gov/patents/init_events/pph/index.jsp** or send an inquiry to **PPHfeedback@uspto.gov.**

4. ☐ Acknowledgment is made of a claim for foreign priority under 35 U.S.C. § 119(a)-(d) or (f).

   Certified copies:

   a) ☐All b) ☐ Some *c) ☐ None of the:

   1. ☐ Certified copies of the priority documents have been received.
   2. ☐ Certified copies of the priority documents have been received in Application No. _____ .
   3. ☐ Copies of the certified copies of the priority documents have been received in this national stage application from the International Bureau (PCT Rule 17.2(a)).

   * Certified copies not received: _____ .

Applicant has THREE MONTHS FROM THE "MAILING DATE" of this communication to file a reply complying with the requirements noted below. Failure to timely comply will result in ABANDONMENT of this application.
THIS THREE-MONTH PERIOD IS NOT EXTENDABLE.

5. ☐ CORRECTED DRAWINGS (as "replacement sheets") must be submitted.
   ☐ including changes required by the attached Examiner's Amendment / Comment or in the Office action of Paper No./Mail Date _____ .

   Identifying indicia such as the application number (see 37 CFR 1.84(c)) should be written on the drawings in the front (not the back) of each sheet. Replacement sheet(s) should be labeled as such in the header according to 37 CFR 1.121(d).

6. ☐ DEPOSIT OF and/or INFORMATION about the deposit of BIOLOGICAL MATERIAL must be submitted. Note the attached Examiner's comment regarding REQUIREMENT FOR THE DEPOSIT OF BIOLOGICAL MATERIAL.

Attachment(s)

1. ☐ Notice of References Cited (PTO-892)
2. ☐ Information Disclosure Statements (PTO/SB/08), Paper No./Mail Date _____.
3. ☐ Examiner's Comment Regarding Requirement for Deposit of Biological Material _____.
4. ☑ Interview Summary (PTO-413), Paper No./Mail Date. _____.
5. ☑ Examiner's Amendment/Comment
6. ☑ Examiner's Statement of Reasons for Allowance
7. ☐ Other _____.

/CHENEA DAVIS/
Primary Examiner, Art Unit 2421

DETAILED ACTION

1. The present application is being examined under the pre-AIA first to invent provisions.

Terminal Disclaimer

2. The terminal disclaimer filed on 10/29/19 disclaiming the terminal portion of any patent granted on this application which would extend beyond the expiration date of **US8296791** has been reviewed and is accepted. The terminal disclaimer has been recorded.

EXAMINER'S AMENDMENT

3. An examiner's amendment to the record appears below. Should the changes and/or additions be unacceptable to applicant, an amendment may be filed as provided by 37 CFR 1.312. To ensure consideration of such an amendment, it MUST be submitted no later than the payment of the issue fee.

4. Authorization for this examiner's amendment was given on 12/6/2019, subsequent to an interview with Mike Mauriel on 11/27/2019.

The application has been amended as follows:

Claim 1. A media measurement method comprising:

using one or more computers to generate a play stream of content identification results corresponding to a sequence of submitted data samples, the submitted data samples corresponding to video data samples captured at a monitoring device associated with a monitored audience member; and using one or more computers to utilize sample sequence data and content offset data to deduce play-altering actions of the monitored audience member, the sample sequence data corresponding to a sequence of the content identification results, the content offset data including content offsets associated with the content identification results, a content offset indicating a time position of a content identification result within identified content, wherein to utilize comprises, for a particular plurality of submitted data samples and corresponding content identification results, comparing a progression of log times associated with capture timing of each of the particular plurality of submitted data samples and a progression of content offsets of the corresponding content identification results[[.]]; and

using one or more computers to utilize deduced play altering actions of the monitored audience member to generate a media measurement report.

Claim 10. A media measurement method comprising:

using one or more computers to generate a play stream of content identification results corresponding to a sequence of submitted data samples, the submitted data samples corresponding to video data samples captured at a monitoring device associated with a monitored audience member; ~~and~~

using one or more computers to utilize sample sequence data and content offset data to deduce play-altering actions of the monitored audience member, the sample sequence data corresponding to a sequence of the content identification results, wherein play-altering actions include actions that alter at least one of a pace and a sequence of a media stream, the content

offset data including content offsets associated with the content identification results, a content offset indicating a time position of a content identification result within identified content, wherein to utilize comprises, for a particular plurality of submitted data samples and corresponding content identification results, comparing a progression of log times associated with capture timing of each of the particular plurality of submitted data samples and a progression of content offsets of the corresponding content identification results; and

using one or more computers to utilize deduced play altering actions of the monitored audience member to generate a media measurement report.

Claim 13. The method of claim 10 wherein at least one of a play list and a play stream is generated, by one or more computers, including content offset data as part of deducing media play-altering actions of a monitored audience member.

Claim 14. The method of claim 13 wherein the at least one of a play stream and play list including content offset data comprises the play stream of content identification results.

Reasons for Allowance

5. Claims 1 and 3-14 are allowed.

6. The following is an examiner's statement of reasons for allowance: claims 1 and 3-14 are allowed because the prior art fails to specifically disclose or suggest the elements/steps of:

"using one or more computers to generate a play stream of content identification results corresponding to a sequence of submitted data samples, the submitted data samples corresponding to video data samples captured at a monitoring device associated with a monitored audience member; and using one or more computers to utilize sample sequence data and content offset data

to deduce play-altering actions of the monitored audience member, the sample sequence data corresponding to a sequence of the content identification results, the content offset data including content offsets associated with the content identification results, a content offset indicating a time position of a content identification result within identified content, wherein to utilize comprises, for a particular plurality of submitted data samples and corresponding content identification results, comparing a progression of log times associated with capture timing of each of the particular plurality of submitted data samples and a progression of content offsets of the corresponding content identification results; and

using one or more computers to utilize deduced play altering actions of the monitored audience member to generate a media measurement report" as recited by the independent claims.

Any comments considered necessary by applicant must be submitted no later than the payment of the issue fee and, to avoid processing delays, should preferably accompany the issue fee. Such submissions should be clearly labeled "Comments on Statement of Reasons for Allowance."

Conclusion

7. Any inquiry concerning this communication or earlier communications from the examiner should be directed to CHENEA DAVIS whose telephone number is (571)272-9524. The examiner can normally be reached on M-F: 8:00 am - 4:00 pm.

Examiner interviews are available via telephone, in-person, and video conferencing using a USPTO supplied web-based collaboration tool. To schedule an interview, applicant is

encouraged to use the USPTO Automated Interview Request (AIR) at http://www.uspto.gov/interviewpractice.

If attempts to reach the examiner by telephone are unsuccessful, the examiner's supervisor, Nathan Flynn can be reached on 571-272-1915. The fax phone number for the organization where this application or proceeding is assigned is 571-273-8300.

Information regarding the status of an application may be obtained from the Patent Application Information Retrieval (PAIR) system. Status information for published applications may be obtained from either Private PAIR or Public PAIR. Status information for unpublished applications is available through Private PAIR only. For more information about the PAIR system, see http://pair-direct.uspto.gov. Should you have questions on access to the Private PAIR system, contact the Electronic Business Center (EBC) at 866-217-9197 (toll-free). If you would like assistance from a USPTO Customer Service Representative or access to the automated information system, call 800-786-9199 (IN USA OR CANADA) or 571-272-1000.

/CHENEA DAVIS/
Primary Examiner, Art Unit 2421

Examiner-Initiated Interview Summary	Application No. 16/403,204	Applicant(s) Steuer et al.	
	Examiner CHENEA DAVIS	Art Unit 2421	AIA (FITF) Status No

All participants (applicant, applicant's representative, PTO personnel):

(1) CHENEA DAVIS. (3) _____.

(2) Mike Mauriel. (4) _____.

Date of Interview: 27 November 2019.

Type: ☑ Telephonic ☐ Video Conference
☐ Personal [copy given to: ☐ applicant ☐ applicant's representative]

Exhibit shown or demonstration conducted: ☐ Yes ☑ No.
If Yes, brief description: _____.

Issues Discussed ☑ 101 ☐ 112 ☐ 102 ☐ 103 ☐ Others
(For each of the checked box(es) above, please describe below the issue and detailed description of the discussion)

Claim(s) discussed: 1 and 10.

Identification of prior art discussed: n/a.

Substance of Interview
(For each issue discussed, provide a detailed description and indicate if agreement was reached. Some topics may include: identification or clarification of a reference or a portion thereof, claim interpretation, proposed amendments, arguments of any applied references etc...)

The Examiner proposed amending the independent claims to overcome a rejection under 35 USC 101 and to place the claims in condition for allowance..

Applicant recordation instructions: It is not necessary for applicant to provide a separate record of the substance of interview.

Examiner recordation instructions: Examiners must summarize the substance of any interview of record. A complete and proper recordation of the substance of an interview should include the items listed in MPEP 713.04 for complete and proper recordation including the identification of the general thrust of each argument or issue discussed, a general indication of any other pertinent matters discussed regarding patentability and the general results or outcome of the interview, to include an indication as to whether or not agreement was reached on the issues raised.

☐ Attachment

/CHENEA DAVIS/ Primary Examiner, Art Unit 2421	

Index of Claims	Application/Control No.	Applicant(s)/Patent Under Reexamination
	16/403,204	Steuer et al.
	Examiner	**Art Unit**
	CHENEA DAVIS	2421

✓	Rejected	-	Cancelled	N	Non-Elected	A	Appeal
=	Allowed	÷	Restricted	I	Interference	O	Objected

CLAIMS

☑ Claims renumbered in the same order as presented by applicant ☐ CPA ☑ T.D. ☐ R.1.47

CLAIM		DATE								
Final	Original	09/03/2019	11/12/2019							
1	1	✓	=							
	2	✓	-							
2	3	✓	=							
3	4	✓	=							
4	5	✓	=							
5	6	✓	=							
6	7	✓	=							
7	8	✓	=							
8	9	✓	=							
9	10	✓	=							
10	11	✓	=							
11	12	✓	=							
12	13		=							
13	14		=							

Search Notes	Application/Control No.	Applicant(s)/Patent Under Reexamination
	16/403,204	Steuer et al.
	Examiner	**Art Unit**
	CHENEA DAVIS	2421

CPC - Searched*		
Symbol	**Date**	**Examiner**
G06Q30/0246 H04L67/22 H04L65/60 H04N21/$6	09/03/2019	CD
G06Q30/0246 H04L67/22 H04L65/60 H04N21/$6	12/09/2019	CD

CPC Combination Sets - Searched*		
Symbol	**Date**	**Examiner**

US Classification - Searched*			
Class	**Subclass**	**Date**	**Examiner**

* See search history printout included with this form or the SEARCH NOTES box below to determine the scope of the search.

Search Notes		
Search Notes	**Date**	**Examiner**
Updated EAST search results included	12/09/2019	CD
Updated Inventor search included - see search results printout	12/09/2019	CD
Updated class search (725), cpc search (see above) - text search only, see search results printout	12/09/2019	CD

Interference Search			
US Class/CPC Symbol	**US Subclass/CPC Group**	**Date**	**Examiner**
	see search results printout	12/09/2019	CD

/CHENEA DAVIS/ Primary Examiner, Art Unit 2421	

Issue Classification	Application/Control No.	Applicant(s)/Patent Under Reexamination
	16/403,204	Steuer et al.
	Examiner	**Art Unit**
	CHENEA DAVIS	2421

CPC						
Symbol					**Type**	**Version**
G06Q	/	30	/	0246	F	2013-01-01
H04L	/	67	/	22	I	2013-01-01
H04L	/	65	/	4076	I	2013-01-01
H04L	/	65	/	605	I	2013-01-01

CPC Combination Sets								
Symbol					**Type**	**Set**	**Ranking**	**Version**
	/		/					

NONE (Assistant Examiner) (Date)		**Total Claims Allowed:** 13	
/CHENEA DAVIS/ Primary Examiner, Art Unit 2421 (Primary Examiner) (Date)	12 November 2019	O.G. Print Claim(s) 1	O.G. Print Figure 5

U.S. Patent and Trademark Office Part of Paper No.: 20191112

Issue Classification	Application/Control No.	Applicant(s)/Patent Under Reexamination
	16/403,204	Steuer et al.
	Examiner	**Art Unit**
	CHENEA DAVIS	2421

INTERNATIONAL CLASSIFICATION				
CLAIMED				
G06Q	/	30	/	02

NON-CLAIMED				
	/		/	

US ORIGINAL CLASSIFICATION	
CLASS	**SUBCLASS**
725	18

CROSS REFERENCES(S)						
CLASS	**SUBCLASS (ONE SUBCLASS PER BLOCK)**					

NONE (Assistant Examiner)	(Date)	**Total Claims Allowed:** 13	
/CHENEA DAVIS/ Primary Examiner, Art Unit 2421 (Primary Examiner)	12 November 2019 (Date)	O.G. Print Claim(s) 1	O.G. Print Figure 5

U.S. Patent and Trademark Office

Part of Paper No.: 20191112

Issue Classification	Application/Control No.	Applicant(s)/Patent Under Reexamination
	16/403,204	Steuer et al.
	Examiner	**Art Unit**
	CHENEA DAVIS	2421

☑ Claims renumbered in the same order as presented by applicant ☐ CPA ☑ T.D. ☐ R.1.47

CLAIMS

Final	Original	Final	Original	Final	Original	Final	Original	Final	Original	Final	Original	Final	Original	Final	Original
1	1	9	10												
	2	10	11												
2	3	11	12												
3	4	12	13												
4	5	13	14												
5	6														
6	7														
7	8														
8	9														

NONE		Total Claims Allowed:	
(Assistant Examiner)	(Date)	13	
/CHENEA DAVIS/ Primary Examiner, Art Unit 2421	12 November 2019	O.G. Print Claim(s)	O.G. Print Figure
(Primary Examiner)	(Date)	1	5

U.S. Patent and Trademark Office Part of Paper No.: 20191112

EAST Search History

EAST Search History (Prior Art)

Ref #	Hits	Search Query	DBs	Default Operator	Plurals	Time Stamp
L1	20369	(viewer$1 user$1 audience$1) with expos$4 with (media content$1 video$1 music$1 audio song$1)	US-PGPUB; USPAT; USOCR; FPRS; EPO; JPO; DERWENT; IBM_TDB	OR	OFF	2019/11/12 11:19
L2	569	L1 and (detect$4 with (paus$3 rewind$3 skip$4))	US-PGPUB; USPAT; USOCR; FPRS; EPO; JPO; DERWENT; IBM_TDB	OR	OFF	2019/11/12 11:19
L3	48085	(G06Q30/0246 H04L67/22 H04L65/60).cpc.	US-PGPUB; USPAT; USOCR; FPRS; EPO; JPO; DERWENT; IBM_TDB	OR	OFF	2019/11/12 11:19
L4	123	L2 and L3	US-PGPUB; USPAT; USOCR; FPRS; EPO; JPO; DERWENT; IBM_TDB	OR	OFF	2019/11/12 11:19
L5	13	((Jonathan) near2 (Steuer)).INV.	US-PGPUB; USPAT; USOCR	OR	OFF	2019/11/12 11:19
L6	26	((Christopher) near2 (Otto)).INV.	US-PGPUB; USPAT; USOCR	OR	OFF	2019/11/12 11:19
L7	26	L5 L6	US-PGPUB; USPAT; USOCR; FPRS; EPO; JPO; DERWENT; IBM_TDB	OR	OFF	2019/11/12 11:19
L8	2	L7 and ((tim$3 near code$1))	US-PGPUB; USPAT; USOCR; FPRS; EPO; JPO; DERWENT; IBM_TDB	OR	OFF	2019/11/12 11:19
L9	569	L1 and (detect$4 with (paus$3 rewind$3 skip$4))	US-PGPUB; USPAT;	OR	OFF	2019/11/12 11:20

			USOCR; FPRS; EPO; JPO; DERWENT; IBM_TDB			
L10	2	steuer.in. and (offset$1 and (timecode$1 (tim$3 near code$1)))	US-PGPUB; USPAT; USOCR; FPRS; EPO; JPO; DERWENT; IBM_TDB	OR	OFF	2019/11/12 11:20
S1	91	("20020161741" | "4677466" | "20020083060" | "7444353" | "20020038456" | "6990453" | "20040224638" | "20020059577" | "20040122679" | "3919479" | "7483975" | "20030009469" | "20040001161" | "20020072982" | "7038619" | "4697209" | "20020072982" | "5095382" | "20050086682" | "5594934" | "5778137" | "20060059277" | "20020010919" | "5945988" | "6513161" | "20020010919" | "5758257" | "5512933" | "20070143777" | "5437050" | "7779415" | "20040048637").PN.	US-PGPUB; USPAT; USOCR; FPRS; EPO; JPO; DERWENT; IBM_TDB	OR	OFF	2016/07/10 15:25
S2	68	(arbotron nielsen).as. and paus$3	US-PGPUB; USPAT; USOCR; FPRS; EPO; JPO; DERWENT; IBM_TDB	OR	OFF	2016/07/10 15:36
S3	7	S2 and (@ad<"20040527")	US-PGPUB; USPAT; USOCR; FPRS; EPO; JPO; DERWENT; IBM_TDB	OR	OFF	2016/07/10 15:37
S4	79	(arbitron nielsen).as. and paus$3	US-PGPUB; USPAT; USOCR; FPRS; EPO; JPO; DERWENT; IBM_TDB	OR	OFF	2016/07/10 15:37
S5	12	S4 and (@ad<"20040527")	US-PGPUB; USPAT; USOCR; FPRS; EPO; JPO; DERWENT; IBM_TDB	OR	OFF	2016/07/10 15:37
S6	2	10/483825.app.	US-PGPUB; USPAT; USOCR; FPRS; EPO; JPO; DERWENT;	OR	OFF	2016/07/10 15:50

			IBM_TDB			
S7	2	"6184918".pn.	US-PGPUB; USPAT; USOCR; FPRS; EPO; JPO; DERWENT; IBM_TDB	OR	OFF	2016/07/10 20:37
S8	17	("20020072982" | "20050086682" | "20060059277" | "7038619" | "7444353" | "7779415").PN.	US-PGPUB; USPAT; USOCR; FPRS; EPO; JPO; DERWENT; IBM_TDB	OR	OFF	2016/07/10 21:02
S9	13275	(viewer$1 user$1 audience$1) with expos$4 with (media content$1 video$1 music$1 audio song$1)	US-PGPUB; USPAT; USOCR; FPRS; EPO; JPO; DERWENT; IBM_TDB	OR	OFF	2016/07/11 01:39
S10	333	S9 and (detect$4 with (paus$3 rewind$3 skip$4))	US-PGPUB; USPAT; USOCR; FPRS; EPO; JPO; DERWENT; IBM_TDB	OR	OFF	2016/07/11 01:39
S11	63038	"725".clas.	US-PGPUB; USPAT; USOCR; FPRS; EPO; JPO; DERWENT; IBM_TDB	OR	OFF	2016/07/11 01:39
S12	203	S10 AND ((H04N21/812 OR H04N21/44008 OR H04N21/4394 OR H04N21/4126 OR H04N21/23 OR H04N21/258 OR H04N21/25866 OR H04N21/4227 OR H04N21/4334 OR H04N21/47214 OR H04N21/478 OR H04N21/4788 OR H04N21/632 OR H04N21/6543 OR H04N21/8133 OR H04N21/25891 OR H04N21/44222 OR H04N21/2407 OR H04N21/2668 OR H04N21/4532 OR H04N21/4622 OR H04N21/84 OR H04N21/6175 OR H04N21/6582 OR H04N21/2393 OR H04N21/2541 OR H04N21/25883 OR H04N21/41407 OR H04N21/4627 OR H04N21/47205 OR H04N21/4725 OR H04N21/4821 OR H04N21/8586 OR H04N21/23424 OR H04N21/23617 OR H04N21/2387 OR H04N21/251 OR H04N21/2543 OR H04N21/25875 OR H04N21/26266 OR H04N21/2665 OR H04N21/4314 OR H04N21/4316 OR H04N21/44 OR H04N21/44204 OR H04N21/4756 OR H04N21/4786 OR H04N21/6125 OR H04N21/64322 OR H04N21/8358 OR H04N21/858 OR	US-PGPUB; USPAT; USOCR; FPRS; EPO; JPO; DERWENT; IBM_TDB	OR	OFF	2016/07/11 01:40

		H04N21/26258 OR H04N21/42203 OR H04N21/442 OR H04N21/44218 OR H04N21/8405 OR H04N21/435 OR H04N21/44213 OR H04N21/4826 OR H04N21/6587 OR H04N21/8352 OR H04N21/2187 OR H04N21/23614 OR H04N21/25841 OR H04N21/26603 OR H04N21/4122 OR H04N21/42204 OR H04N21/4223 OR H04N21/4307 OR H04N21/431 OR H04N21/43615 OR H04N21/4367 OR H04N21/437 OR H04N21/458 OR H04N21/466 OR H04N21/4668 OR H04N21/472 OR H04N21/4828 OR H04N21/80 OR H04N21/8456 OR H04N5/60 OR H04N7/17318 OR H04N13/0062 OR H04N13/0239 OR H04N13/044 OR H04N13/0495 OR H04N2005/2255 OR H04N21/23418 OR H04N21/23439 OR H04N21/2347 OR H04N21/24 OR H04N21/25435 OR H04N21/262 OR H04N21/26613 OR H04N21/42201 OR H04N21/42684 OR H04N21/4335 OR H04N21/4398 OR H04N21/4405 OR H04N21/441 OR H04N21/44209 OR H04N21/4424 OR H04N21/45 OR H04N21/4542 OR H04N21/4623 OR H04N21/4667 OR H04N21/47 OR H04N21/47217 OR H04N21/4722 OR H04N21/4755 OR H04N21/4758 OR H04N21/4784 OR H04N21/4825 OR H04N21/485 OR H04N21/6371 OR H04N21/6581 OR H04N21/8126 OR H04N21/8355 OR H04N21/8455 OR H04N21/854 OR H04N21/8543 OR H04N5/225 OR H04N5/23206 OR H04N5/32 OR H04N5/3205 OR H04N5/321 OR H04N5/77 OR H04N5/783 OR H04N5/93 OR H04N7/17327 OR H04N7/185).CPC.)				
S13	25328	(G06Q30/0246 H04L67/22 H04L65/60).cpc.	US-PGPUB; USPAT; USOCR; FPRS; EPO; JPO; DERWENT; IBM_TDB	OR	OFF	2016/07/11 01:40
S14	47	S10 and S13	US-PGPUB; USPAT; USOCR; FPRS; EPO; JPO; DERWENT; IBM_TDB	OR	OFF	2016/07/11 01:40
S15	67	S10 and S11	US-PGPUB; USPAT; USOCR; FPRS; EPO; JPO; DERWENT; IBM_TDB	OR	OFF	2016/07/11 01:41
S16	44	S10 and (@ad<"20040527")	US-PGPUB; USPAT;	OR	OFF	2016/07/11 01:41

			USOCR; FPRS; EPO; JPO; DERWENT; IBM_TDB			
S17	32	S16 AND ((H04N21/2347 OR H04N21/2541 OR H04N21/4143 OR H04N21/4405 OR H04N21/4627 OR H04N21/25875 OR H04N21/8355 OR H04N21/235 OR H04N21/2362 OR H04N21/2543 OR H04N21/2547 OR H04N21/4345 OR H04N21/435 OR H04N21/44204 OR H04N21/443 OR H04N21/4753 OR H04N21/6581 OR H04N21/8166 OR H04N21/835 OR H04N21/83555 OR H04N21/8358 OR H04N7/162 OR H04N7/17309 OR H04N21/23476 OR H04N2005/91364 OR H04N21/42646 OR H04N21/4325 OR H04N5/913 OR H04N7/163 OR H04N5/765 OR H04N5/77 OR H04N5/775 OR H04N5/781 OR H04N5/85 OR H04N9/8042 OR H04N19/107 OR H04N19/124 OR H04N19/14 OR H04N19/142 OR H04N19/149 OR H04N19/15 OR H04N19/152 OR H04N19/176 OR H04N19/179 OR H04N19/503 OR H04N19/61 OR H04N21/26613 OR H04N21/4623 OR H04N19/42 OR H04N19/87 OR H04N21/25816 OR H04N21/4316 OR H04N21/454 OR H04N21/47 OR H04N21/47214 OR H04N21/6334 OR H04N5/76).CPC.)	US-PGPUB; USPAT; USOCR; FPRS; EPO; JPO; DERWENT; IBM_TDB	OR	OFF	2016/07/11 01:41
S18	16	(signal$3 near2 user$1 near2 expos$4).clm.	US-PGPUB; USPAT; USOCR; FPRS; EPO; JPO; DERWENT; IBM_TDB	OR	OFF	2016/07/11 01:49
S19	12	((Jonathan) near2 (Steuer)).INV.	US-PGPUB; USPAT; USOCR	OR	OFF	2016/07/11 01:49
S20	24	((Christopher) near2 (Otto)).INV.	US-PGPUB; USPAT; USOCR	OR	OFF	2016/07/11 01:49
S21	24	S19 S20	US-PGPUB; USPAT; USOCR; FPRS; EPO; JPO; DERWENT; IBM_TDB	OR	OFF	2016/07/11 01:49
S22	2	S18 and S21	US-PGPUB; USPAT; USOCR; FPRS; EPO; JPO; DERWENT; IBM_TDB	OR	OFF	2016/07/11 01:49
S23	12	("20020038456" | "20020083060" |	US-PGPUB;	OR	OFF	2017/04/01

		"5512933" | "7483975").PN.	USPAT; USOCR; FPRS; EPO; JPO; DERWENT; IBM_TDB			13:13
S24	2	("20080154401").PN.	US-PGPUB; USPAT; USOCR; FPRS; EPO; JPO; DERWENT; IBM_TDB	OR	OFF	2017/04/01 13:14
S25	0	wo-2003091990-$.did.	US-PGPUB; USPAT; USOCR; FPRS; EPO; JPO; DERWENT; IBM_TDB	OR	OFF	2017/04/01 13:23
S26	0	wo-2003/091990-$.did.	US-PGPUB; USPAT; USOCR; FPRS; EPO; JPO; DERWENT; IBM_TDB	OR	OFF	2017/04/01 13:23
S27	0	wo-03/091990-$.did.	US-PGPUB; USPAT; USOCR; FPRS; EPO; JPO; DERWENT; IBM_TDB	OR	OFF	2017/04/01 13:23
S28	3	wo-03091990-$.did.	US-PGPUB; USPAT; USOCR; FPRS; EPO; JPO; DERWENT; IBM_TDB	OR	OFF	2017/04/01 13:23
S29	3	10/978313.app.	US-PGPUB; USPAT; USOCR; FPRS; EPO; JPO; DERWENT; IBM_TDB	OR	OFF	2017/04/01 13:23
S30	32536	(h04l65/60 h04l67/22 g06q30/0246).cpc.	US-PGPUB; USPAT; USOCR; FPRS; EPO; JPO; DERWENT; IBM_TDB	OR	OFF	2017/04/01 14:13
S31	64	S30 and ((media content$1) near offset$1)	US-PGPUB; USPAT; USOCR; FPRS; EPO; JPO; DERWENT;	OR	OFF	2017/04/01 14:14

			IBM_TDB			
S32	0	S31 and (@ad<"20040527")	US-PGPUB; USPAT; USOCR; FPRS; EPO; JPO; DERWENT; IBM_TDB	OR	OFF	2017/04/01 14:14
S33	17	(signal$3 near2 user$1 near2 expos$4).clm.	US-PGPUB; USPAT; USOCR; FPRS; EPO; JPO; DERWENT; IBM_TDB	OR	OFF	2017/04/01 14:17
S34	12	((Jonathan) near2 (Steuer)).INV.	US-PGPUB; USPAT; USOCR	OR	OFF	2017/04/01 14:17
S35	24	((Christopher) near2 (Otto)).INV.	US-PGPUB; USPAT; USOCR	OR	OFF	2017/04/01 14:17
S36	24	S34 S35	US-PGPUB; USPAT; USOCR; FPRS; EPO; JPO; DERWENT; IBM_TDB	OR	OFF	2017/04/01 14:17
S37	2	S33 and S36	US-PGPUB; USPAT; USOCR; FPRS; EPO; JPO; DERWENT; IBM_TDB	OR	OFF	2017/04/01 14:17
S38	5	S36 and (offset$1.clm.)	US-PGPUB; USPAT; USOCR; FPRS; EPO; JPO; DERWENT; IBM_TDB	OR	OFF	2017/04/01 14:18
S39	64525	"725".clas.	US-PGPUB; USPAT; USOCR; FPRS; EPO; JPO; DERWENT; IBM_TDB	OR	OFF	2017/04/01 14:18
S40	1	S31 and S39	US-PGPUB; USPAT; USOCR; FPRS; EPO; JPO; DERWENT; IBM_TDB	OR	OFF	2017/04/01 14:18
S41	21	("7444353" | "20080154401" | "7483975" | "20060059277" | "7038619" | "20020072982" | "20050086682" | "7779415").PN.	US-PGPUB; USPAT; USOCR; FPRS;	OR	OFF	2018/03/29 16:26

			EPO; JPO; DERWENT; IBM_TDB			
S42	1	14/175811.app.	US-PGPUB; USPAT; USOCR; FPRS; EPO; JPO; DERWENT; IBM_TDB	OR	OFF	2018/03/29 17:07
S43	2	"20080154401".pn.	US-PGPUB; USPAT; USOCR; FPRS; EPO; JPO; DERWENT; IBM_TDB	OR	OFF	2018/03/29 17:11
S44	1076416	(determin$6 detect$4 deduc$5) near3 (channel$1 sourc$3 station$1)	US-PGPUB; USPAT; USOCR; FPRS; EPO; JPO; DERWENT; IBM_TDB	OR	OFF	2018/03/29 17:15
S45	297	(determin$6 detect$4 deduc$5) near3 (channel$1 sourc$3 station$1) near3 (sequen$6 near3 (sampl$4 clip$4))	US-PGPUB; USPAT; USOCR; FPRS; EPO; JPO; DERWENT; IBM_TDB	OR	OFF	2018/03/29 17:16
S46	139	@ad< "20050526" and S45	US-PGPUB; USPAT; USOCR; FPRS; EPO; JPO; DERWENT; IBM_TDB	OR	OFF	2018/03/29 17:16
S47	0	S46 and ((media video$1 content$1 audio$1 music$1 song$1) near recogni$7)	US-PGPUB; USPAT; USOCR; FPRS; EPO; JPO; DERWENT; IBM_TDB	OR	OFF	2018/03/29 17:17
S48	0	S46 and ((media video$1 content$1 audio$1 music$1 song$1 sampl$3) near recogni$7)	US-PGPUB; USPAT; USOCR; FPRS; EPO; JPO; DERWENT; IBM_TDB	OR	OFF	2018/03/29 17:17
S49	1	S46 and ((media video$1 content$1 audio$1 music$1 song$1 sampl$3) near2 recogni$7)	US-PGPUB; USPAT; USOCR; FPRS; EPO; JPO; DERWENT; IBM_TDB	OR	OFF	2018/03/29 17:17
S50	1740	((determin$6 detect$4 deduc$5) near3 (channel$1 sourc$3 station$1)) with	US-PGPUB; USPAT;	OR	OFF	2018/03/29 17:19

		((order$3 sequen$6) near2 (sampl$4 clip$4 music$1 song$1 video$1 content$1 media$1))	USOCR; FPRS; EPO; JPO; DERWENT; IBM_TDB			
S51	566	@ad< "20050526" and S50	US-PGPUB; USPAT; USOCR; FPRS; EPO; JPO; DERWENT; IBM_TDB	OR	OFF	2018/03/29 17:19
S52	44	S51 and ((media video$1 content$1 audio$1 music$1 song$1 sampl$3) near3 recogni$7)	US-PGPUB; USPAT; USOCR; FPRS; EPO; JPO; DERWENT; IBM_TDB	OR	OFF	2018/03/29 17:19
S53	105850	((media video$1 audio$1 music$1 song$1 sampl$3) near3 recogni$7)	US-PGPUB; USPAT; USOCR; FPRS; EPO; JPO; DERWENT; IBM_TDB	OR	OFF	2018/03/29 17:22
S54	4361	S53 and ((Sequen$6 order$3) near (sampl$4 clip$4))	US-PGPUB; USPAT; USOCR; FPRS; EPO; JPO; DERWENT; IBM_TDB	OR	OFF	2018/03/29 17:23
S55	11	("4843562" "5210820" "20020083060").pn.	US-PGPUB; USPAT; USOCR; FPRS; EPO; JPO; DERWENT; IBM_TDB	OR	OFF	2018/03/29 17:30
S56	105850	((media video$1 audio$1 music$1 song$1 sampl$3) near3 recogni$7)	US-PGPUB; USPAT; USOCR; FPRS; EPO; JPO; DERWENT; IBM_TDB	OR	OFF	2018/03/29 21:52
S57	20459	S56 and ((Sequen$6 order$3) near3 (music audio video$1 media song$1))	US-PGPUB; USPAT; USOCR; FPRS; EPO; JPO; DERWENT; IBM_TDB	OR	OFF	2018/03/29 21:52
S58	3434	S57 and ((deduc$3 infer$4 detect$4 determin$6) near2 (station$1 source$1 channel$1 album$1))	US-PGPUB; USPAT; USOCR; FPRS; EPO; JPO; DERWENT; IBM_TDB	OR	OFF	2018/03/29 21:53

S59	610	((deduc$3 infer$4 detect$4 determin$6) near2 (station$1 source$1 channel$1 album$1)) with ((Sequen$6 order$3) near3 (music audio video$1 media song$1))	US-PGPUB; USPAT; USOCR; FPRS; EPO; JPO; DERWENT; IBM_TDB	OR	OFF	2018/03/29 21:54
S60	174	S59 and (@ad<"20040527")	US-PGPUB; USPAT; USOCR; FPRS; EPO; JPO; DERWENT; IBM_TDB	OR	OFF	2018/03/29 21:55
S61	12	S56 and S60	US-PGPUB; USPAT; USOCR; FPRS; EPO; JPO; DERWENT; IBM_TDB	OR	OFF	2018/03/29 21:55
S62	9624	S56 and ((Sequen$6) near3 (music video$1 media song$1))	US-PGPUB; USPAT; USOCR; FPRS; EPO; JPO; DERWENT; IBM_TDB	OR	OFF	2018/03/29 21:57
S63	1600	S62 and ((deduc$3 infer$4 detect$4 determin$6) near2 (station$1 source$1 channel$1 album$1))	US-PGPUB; USPAT; USOCR; FPRS; EPO; JPO; DERWENT; IBM_TDB	OR	OFF	2018/03/29 21:57
S64	315	S63 and (@ad<"20040527")	US-PGPUB; USPAT; USOCR; FPRS; EPO; JPO; DERWENT; IBM_TDB	OR	OFF	2018/03/29 21:57
S65	315	S56 and S64	US-PGPUB; USPAT; USOCR; FPRS; EPO; JPO; DERWENT; IBM_TDB	OR	OFF	2018/03/29 21:58
S66	154	S65 and offset$1	US-PGPUB; USPAT; USOCR; FPRS; EPO; JPO; DERWENT; IBM_TDB	OR	OFF	2018/03/29 21:58
S67	154	S65 and offset$3	US-PGPUB; USPAT; USOCR; FPRS; EPO; JPO;	OR	OFF	2018/03/29 21:58

			DERWENT; IBM_TDB			
S68	94	S67 and (music song$1)	US-PGPUB; USPAT; USOCR; FPRS; EPO; JPO; DERWENT; IBM_TDB	OR	OFF	2018/03/29 21:59
S69	987	S56 and ((Sequen$6) near3 (music song$1))	US-PGPUB; USPAT; USOCR; FPRS; EPO; JPO; DERWENT; IBM_TDB	OR	OFF	2018/03/29 22:00
S70	216	S69 and ((deduc$3 infer$4 detect$4 determin$6) near2 (station$1 source$1 channel$1 album$1))	US-PGPUB; USPAT; USOCR; FPRS; EPO; JPO; DERWENT; IBM_TDB	OR	OFF	2018/03/29 22:00
S71	216	S56 and S70	US-PGPUB; USPAT; USOCR; FPRS; EPO; JPO; DERWENT; IBM_TDB	OR	OFF	2018/03/29 22:01
S72	83	S71 and (@ad<"20040527")	US-PGPUB; USPAT; USOCR; FPRS; EPO; JPO; DERWENT; IBM_TDB	OR	OFF	2018/03/29 22:01
S73	58	S72 and offset$3	US-PGPUB; USPAT; USOCR; FPRS; EPO; JPO; DERWENT; IBM_TDB	OR	OFF	2018/03/29 22:01
S74	1	14/175811.app.	US-PGPUB; USPAT; USOCR; FPRS; EPO; JPO; DERWENT; IBM_TDB	OR	OFF	2018/03/29 22:04
S75	0	13/914870.app.	US-PGPUB; USPAT; USOCR; FPRS; EPO; JPO; DERWENT; IBM_TDB	OR	OFF	2018/03/29 22:07
S76	188	S71 and (@ad<"20140207")	US-PGPUB; USPAT; USOCR;	OR	OFF	2018/03/29 22:11

			FPRS; EPO; JPO; DERWENT; IBM_TDB			
S77	88	S76 and offset$3	US-PGPUB; USPAT; USOCR; FPRS; EPO; JPO; DERWENT; IBM_TDB	OR	OFF	2018/03/29 22:12
S78	30	S77 not S73	US-PGPUB; USPAT; USOCR; FPRS; EPO; JPO; DERWENT; IBM_TDB	OR	OFF	2018/03/29 22:12
S79	123	((deduc$3 infer$4 detect$4 determin$6) near2 (station$1 source$1 channel$1 album$1)) with based with ((music video$1 media song$1 content$1) near2 (sequenc$3 order$3 offset$4))	US-PGPUB; USPAT; USOCR; FPRS; EPO; JPO; DERWENT; IBM_TDB	OR	OFF	2018/03/29 22:15
S80	73	S79 and (@ad<"20140207")	US-PGPUB; USPAT; USOCR; FPRS; EPO; JPO; DERWENT; IBM_TDB	OR	OFF	2018/03/29 22:16
S81	2	"7986913".pn.	US-PGPUB; USPAT; USOCR; FPRS; EPO; JPO; DERWENT; IBM_TDB	OR	OFF	2018/03/29 22:22
S82	2	"20070143777".pn.	US-PGPUB; USPAT; USOCR; FPRS; EPO; JPO; DERWENT; IBM_TDB	OR	OFF	2018/03/29 22:22
S83	1	14/175811.app.	US-PGPUB; USPAT; USOCR; FPRS; EPO; JPO; DERWENT; IBM_TDB	OR	OFF	2018/03/30 08:06
S84	1	S83 and (expos$4)	US-PGPUB; USPAT; USOCR; FPRS; EPO; JPO; DERWENT; IBM_TDB	OR	OFF	2018/03/30 08:06
S85	1	15/025137.app.	US-PGPUB;	OR	OFF	2018/03/30

			USPAT; USOCR; FPRS; EPO; JPO; DERWENT; IBM_TDB			08:37
S86	1	S85 and (monitor$3 with cloud$1)	US-PGPUB; USPAT; USOCR; FPRS; EPO; JPO; DERWENT; IBM_TDB	OR	OFF	2018/03/30 08:37
S87	0	S85 and (monitor$3 with cloud$1 with sun)	US-PGPUB; USPAT; USOCR; FPRS; EPO; JPO; DERWENT; IBM_TDB	OR	OFF	2018/03/30 08:39
S88	0	"200600592778".pn.	US-PGPUB; USPAT; USOCR; FPRS; EPO; JPO; DERWENT; IBM_TDB	OR	OFF	2018/03/30 09:53
S89	3	"20060059277".pn.	US-PGPUB; USPAT; USOCR; FPRS; EPO; JPO; DERWENT; IBM_TDB	OR	OFF	2018/03/30 09:53
S90	2	11/216543.app.	US-PGPUB; USPAT; USOCR; FPRS; EPO; JPO; DERWENT; IBM_TDB	OR	OFF	2018/03/30 09:53
S91	23	("7444353" | "20080154401" | "7483975" | "20060059277" | "7038619" | "20020072982" | "20050086682" | "20070143777" | "7779415").PN.	US-PGPUB; USPAT; USOCR; FPRS; EPO; JPO; DERWENT; IBM_TDB	OR	OFF	2018/10/23 09:11
S92	26	("20090244402" | "20100031288" | "20110209177" | "20110289536" | "20140059628" | "20150020091" | "20150140896" | "20150312636" | "20170188201" | "7046161").PN.	US-PGPUB; USPAT; USOCR; FPRS; EPO; JPO; DERWENT; IBM_TDB	OR	OFF	2018/10/23 12:44
S93	18	(signal$3 near2 user$1 near2 expos$4).clm.	US-PGPUB; USPAT; USOCR; FPRS; EPO; JPO; DERWENT;	OR	OFF	2018/10/30 18:31

			IBM_TDB			
S94	12	((Jonathan) near2 (Steuer)).INV.	US-PGPUB; USPAT; USOCR	OR	OFF	2018/10/30 18:31
S95	25	((Christopher) near2 (Otto)).INV.	US-PGPUB; USPAT; USOCR	OR	OFF	2018/10/30 18:31
S96	25	S94 S95	US-PGPUB; USPAT; USOCR; FPRS; EPO; JPO; DERWENT; IBM_TDB	OR	OFF	2018/10/30 18:31
S97	2	S93 and S96	US-PGPUB; USPAT; USOCR; FPRS; EPO; JPO; DERWENT; IBM_TDB	OR	OFF	2018/10/30 18:31
S98	17934	(viewer$1 user$1 audience$1) with expos$4 with (media content$1 video$1 music$1 audio song$1)	US-PGPUB; USPAT; USOCR; FPRS; EPO; JPO; DERWENT; IBM_TDB	OR	OFF	2018/10/30 18:31
S99	481	S98 and (detect$4 with (paus$3 rewind$3 skip$4))	US-PGPUB; USPAT; USOCR; FPRS; EPO; JPO; DERWENT; IBM_TDB	OR	OFF	2018/10/30 18:31
S100	43966	(G06Q30/0246 H04L67/22 H04L65/60).cpc.	US-PGPUB; USPAT; USOCR; FPRS; EPO; JPO; DERWENT; IBM_TDB	OR	OFF	2018/10/30 18:31
S101	105	S99 and S100	US-PGPUB; USPAT; USOCR; FPRS; EPO; JPO; DERWENT; IBM_TDB	OR	OFF	2018/10/30 18:31
S102	128	((deduc$3 infer$4 detect$4 determin$6) near2 (station$1 source$1 channel$1 album$1)) with based with ((music video$1 media song$1 content$1) near2 (sequenc$3 order$3 offset$4))	US-PGPUB; USPAT; USOCR; FPRS; EPO; JPO; DERWENT; IBM_TDB	OR	OFF	2018/10/30 18:31
S103	74	S102 and (@ad<"20140207")	US-PGPUB; USPAT; USOCR; FPRS;	OR	OFF	2018/10/30 18:31

			EPO; JPO; DERWENT; IBM_TDB			
S104	105	S99 and S100	US-PGPUB; USPAT; USOCR; FPRS; EPO; JPO; DERWENT; IBM_TDB	OR	OFF	2018/10/30 18:31
S105	0	(content near offset$1) and (expos$3 near3 tim$3 near3 ((another other different) near3 broadcast$3))	US-PGPUB; USPAT; USOCR; FPRS; EPO; JPO; DERWENT; IBM_TDB	OR	OFF	2018/10/30 18:33
S106	0	S96 and (expos$3 near3 tim$3 near3 ((another other different) near3 broadcast$3))	US-PGPUB; USPAT; USOCR; FPRS; EPO; JPO; DERWENT; IBM_TDB	OR	OFF	2018/10/30 18:33
S107	0	(expos$3 near3 tim$3 near3 ((another other different) near3 broadcast$3))	US-PGPUB; USPAT; USOCR; FPRS; EPO; JPO; DERWENT; IBM_TDB	OR	OFF	2018/10/30 18:34
S108	1870	((expos$3 view$3 watch$3) with tim$3 with ((another other different) with broadcast$3))	US-PGPUB; USPAT; USOCR; FPRS; EPO; JPO; DERWENT; IBM_TDB	OR	OFF	2018/10/30 18:34
S109	0	S96 and S108	US-PGPUB; USPAT; USOCR; FPRS; EPO; JPO; DERWENT; IBM_TDB	OR	OFF	2018/10/30 18:35
S110	0	h04n/21.$6.cpc.	US-PGPUB; USPAT; USOCR; FPRS; EPO; JPO; DERWENT; IBM_TDB	OR	OFF	2018/10/30 18:35
S111	416627	h04n21/$6.cpc.	US-PGPUB; USPAT; USOCR; FPRS; EPO; JPO; DERWENT; IBM_TDB	OR	OFF	2018/10/30 18:35
S112	69510	"725".clas.	US-PGPUB; USPAT;	OR	OFF	2018/10/30 18:36

			USOCR; FPRS; EPO; JPO; DERWENT; IBM_TDB			
S113	470202	S111 S112 S100	US-PGPUB; USPAT; USOCR; FPRS; EPO; JPO; DERWENT; IBM_TDB	OR	OFF	2018/10/30 18:36
S114	471036	S108 anbd S113	US-PGPUB; USPAT; USOCR; FPRS; EPO; JPO; DERWENT; IBM_TDB	OR	OFF	2018/10/30 18:36
S115	1312	S108 and S113	US-PGPUB; USPAT; USOCR; FPRS; EPO; JPO; DERWENT; IBM_TDB	OR	OFF	2018/10/30 18:36
S116	0	S115 and (tim$3 near3 position$1 near3 within near (media content$1 video$1 program$4))	US-PGPUB; USPAT; USOCR; FPRS; EPO; JPO; DERWENT; IBM_TDB	OR	OFF	2018/10/30 18:37
S117	1	S115 and (tim$3 near3 position$1 near3 within near3 (media content$1 video$1 program$4))	US-PGPUB; USPAT; USOCR; FPRS; EPO; JPO; DERWENT; IBM_TDB	OR	OFF	2018/10/30 18:37
S118	9	("7444353" | "20080154401" | "7483975" | "20060059277" | "7038619" | "20020072982" | "20050086682" | "20070143777" | "7779415").PN.	US-PGPUB; USPAT; EPO	OR	ON	2019/09/03 09:28
S119	1	"20020083060".pn.	US-PGPUB; USPAT; EPO	OR	ON	2019/09/03 09:37
S120	4	("20020038456" | "20020083060" | "5512933" | "7483975").PN.	US-PGPUB; USPAT; EPO	OR	ON	2019/09/03 09:41
S121	135	("20020010919" | "20020038456" | "20020059577" | "20020072982" | "20020083060" | "20020161741" | "20030009469" | "20030135623" | "20030177488" | "20040001161" | "20040034441" | "20040048637" | "20040055445" | "20040122679" | "20040224638" | "20050086682" | "20060059277" | "20070143777" | "20080154401" | "3919479" |	US-PGPUB; USPAT; USOCR; FPRS; EPO; JPO; DERWENT; IBM_TDB	OR	OFF	2019/09/03 09:52

		"4677466" | "4697209" | "5095382" | "5210366" | "5404161" | "5436653" | "5437050" | "5512933" | "5594934" | "5758257" | "5844938" | "5945988" | "6513161" | "6990453" | "7038619" | "7444353" | "7483975" | "7634787" | "7779415" | "8131389" | "8296791" | "8510768" | "8677389" | "8756622").PN.				
S122	4	steuer.in. and (play$1altering).clm.	US-PGPUB; USPAT; USOCR; FPRS; EPO; JPO; DERWENT; IBM_TDB	OR	OFF	2019/09/03 10:21
S123	1	16/403204.app. and (offset$1 with (tim$3 (tim$3 near code$1)))	US-PGPUB; USPAT; USOCR; FPRS; EPO; JPO; DERWENT; IBM_TDB	OR	OFF	2019/09/03 10:25
S124	1	16/403204.app. and (offset$1 with (tim$3 near code$1))	US-PGPUB; USPAT; USOCR; FPRS; EPO; JPO; DERWENT; IBM_TDB	OR	OFF	2019/09/03 10:26
S125	1	16/403204.app. and ((tim$3 near code$1))	US-PGPUB; USPAT; USOCR; FPRS; EPO; JPO; DERWENT; IBM_TDB	OR	OFF	2019/09/03 10:26
S126	0	11/139330.app. and ((tim$3 near code$1))	US-PGPUB; USPAT; USOCR; FPRS; EPO; JPO; DERWENT; IBM_TDB	OR	OFF	2019/09/03 10:27
S127	1	11/139330.app.	US-PGPUB; USPAT; USOCR; FPRS; EPO; JPO; DERWENT; IBM_TDB	OR	OFF	2019/09/03 10:27
S128	2	steuer.in. and (offset$1 with (tim$3 near code$1))	US-PGPUB; USPAT; USOCR; FPRS; EPO; JPO; DERWENT; IBM_TDB	OR	OFF	2019/09/03 11:12
S129	2	steuer.in. and (offset$1 and (timecode$1 (tim$3 near code$1)))	US-PGPUB; USPAT; USOCR;	OR	OFF	2019/09/03 11:12

			FPRS; EPO; JPO; DERWENT; IBM_TDB			
S130	19908	(viewer$1 user$1 audience$1) with expos$4 with (media content$1 video$1 music$1 audio song$1)	US-PGPUB; USPAT; USOCR; FPRS; EPO; JPO; DERWENT; IBM_TDB	OR	OFF	2019/09/03 11:13
S131	553	S130 and (detect$4 with (paus$3 rewind$3 skip$4))	US-PGPUB; USPAT; USOCR; FPRS; EPO; JPO; DERWENT; IBM_TDB	OR	OFF	2019/09/03 11:13
S132	46928	(G06Q30/0246 H04L67/22 H04L65/60).cpc.	US-PGPUB; USPAT; USOCR; FPRS; EPO; JPO; DERWENT; IBM_TDB	OR	OFF	2019/09/03 11:13
S133	118	S131 and S132	US-PGPUB; USPAT; USOCR; FPRS; EPO; JPO; DERWENT; IBM_TDB	OR	OFF	2019/09/03 11:13
S134	13	((Jonathan) near2 (Steuer)).INV.	US-PGPUB; USPAT; USOCR	OR	OFF	2019/09/03 11:13
S135	26	((Christopher) near2 (Otto)).INV.	US-PGPUB; USPAT; USOCR	OR	OFF	2019/09/03 11:13
S136	26	S134 S135	US-PGPUB; USPAT; USOCR; FPRS; EPO; JPO; DERWENT; IBM_TDB	OR	OFF	2019/09/03 11:13
S137	2	S136 and ((tim$3 near code$1))	US-PGPUB; USPAT; USOCR; FPRS; EPO; JPO; DERWENT; IBM_TDB	OR	OFF	2019/09/03 11:14
S138	4	("20020038456" | "20020083060" | "5512933" | "7483975").PN.	US-PGPUB; USPAT; EPO	OR	ON	2019/09/03 11:31

EAST Search History (Interference)

Ref #	Hits	Search Query	DBs	Default Operator	Plurals	Time Stamp

L11	2	((COMPAR$5 with (captur$4 near2 tim$3) with offset$1) and (deduc$5 with play$1alter$3)).clm.	US-PGPUB; USPAT	OR	OFF	2019/11/12 11:22

11/12/2019 11:27:24 AM
C:\Users\csmith3\Documents\EAST\Workspaces\Steuer 811 RCE.wsp

Attorney Docket No.: 10004-2000116
(PATENT)

IN THE UNITED STATES PATENT AND TRADEMARK OFFICE

First Named Inventor: Jonathan S. Steuer

Application No.: 16/403,204 Group Art Unit: 2421

Filing Date: May 3, 2019 Examiner: Davis, Chenea

Title: MEDIA USAGE MONITORING AND MEASUREMENT SYSTEM AND METHOD

AMENDMENT UNDER 37 CFR § 1.111

Mail Stop Amendment
Commissioner for Patents
P.O. Box 1450
Alexandria, Virginia 22313-1450

Dear Sir:

This is in response to the Office Action dated September 6, 2019 (Paper No. 20190903) for which a response is due on December 6, 2019. Accordingly, this response is timely filed. Reconsideration and allowance of the pending claims, as amended, in light of the remarks presented herein are respectfully requested.

Amendments to the Claims begin on page 2 of this paper.

Remarks begin on page 5 of this paper.

Filed herewith is an eTerminal-Disclaimer.

AMENDMENTS TO THE CLAIMS

Please amend the claims as follows, where additions are underlined and deletions are indicated by ~~strikethrough~~ or enclosed in [[double brackets]]:

1. (Currently Amended) A media measurement method comprising:

using one or more computers to generate a play stream of content identification results corresponding to a sequence of submitted data samples, the submitted data samples corresponding to video data samples captured at a monitoring device associated with a monitored audience member; and

using one or more computers to utilize sample sequence data and content offset data to deduce play-altering actions of the monitored audience member, the sample sequence data corresponding to a sequence of the content identification results, the content offset data including content offsets associated with the content identification results, a content offset indicating a time position of a content identification result within identified content, wherein to utilize comprises, for a particular plurality of submitted data samples and corresponding content identification results, comparing a progression of log times associated with capture timing of each of the particular plurality of submitted data samples and a progression of content offsets of the corresponding content identification results.

2. (Cancelled)

3. (Currently Amended) The method of claim [[2]]1 further comprising:

generating a play list including content offset data as part of deducing media play-altering actions of a monitored audience member.

4. (Currently Amended) The method of claim [[2]]1 further comprising:

utilizing sample sequence data together with corresponding channel data to deduce play-altering actions of a monitored audience member.

5. (Currently Amended) The media measurement method of claim [[2]]1 wherein a clean play list is generated including deduced play-altering actions.

6. (Currently Amended) The media measurement method of claim [[2]]1 wherein the play stream is a raw play stream.

7. (Currently Amended) The media measurement method of claim [[2]]1 wherein the play stream is a clean play stream.

8. (Currently Amended) The method of claim [[2]]1 wherein to utilize further comprises determining if one or more discontinuities exist in the progression of content offsets.

9. (Currently Amended) The method of claim [[2]]1 wherein the content offset data is derived from a comparison conducted by a computerized content identification system comparing the submitted data samples against known content such that content offset data is obtainable without using time codes accompanying the captured video data samples.

10. (Original) A media measurement method comprising:

using one or more computers to generate a play stream of content identification results corresponding to a sequence of submitted data samples, the

submitted data samples corresponding to video data samples captured at a monitoring device associated with a monitored audience member; and

using one or more computers to utilize sample sequence data and content offset data to deduce play-altering actions of the monitored audience member, the sample sequence data corresponding to a sequence of the content identification results, wherein play-altering actions include actions that alter at least one of a pace and a sequence of a media stream, the content offset data including content offsets associated with the content identification results, a content offset indicating a time position of a content identification result within identified content, wherein to utilize comprises, for a particular plurality of submitted data samples and corresponding content identification results, comparing a progression of log times associated with capture timing of each of the particular plurality of submitted data samples and a progression of content offsets of the corresponding content identification results.

11. (Original) The method of claim 10 wherein play-altering actions include at least one of fast forwarding, rewinding, and pausing a media stream.

12. (Original) The method of claim 10 wherein play-altering actions include at least one of skipping forward and skipping backward in a media stream.

REMARKS

Claims 1-12 were pending and under consideration in the present application. By virtue of this response, claim 2 has been cancelled. Therefore, claims 1 and 3-12 are pending and currently under consideration. Of the claims currently under consideration, claims 1 and 3-9 have been amended.

Amendment and cancellation of certain claims is not to be construed as a dedication to the public of any of the subject matter of the claims as previously presented. No new matter has been added. Entry of the above-mentioned amendments is respectfully requested.

Double Patenting

Regarding the non-statutory double patenting rejection of Claims 1-12 over Claims 1-11 of U.S. Patent No. 8,296,791, filed herewith is an eTerminal-Disclaimer. Therefore, Applicant respectfully requests that the non-statutory double patenting rejection be withdrawn.

Claim Rejections Under 35 U.S.C. 103

Claim 1 is rejected under pre-AIA 35 U.S.C. 103(a) as being unpatentable over Kolessar et al. (US 7,483,975) in view of Wang et al. (US 2002/0083060) and Hansen et al. (US 2002/0038456).

Claim 1 is amended herein to incorporate the limitations of claim 2 and claim 2 is cancelled. Claims 3-9 are amended herein to depend on claim 1.

Claims 2-12 were not rejected based on prior art, but only rejected based on double patenting. Therefore, since the limitations of claim 2 are now incorporated into claim 1, and claims 3-9 now depend on claim 1, the claims are believed to be allowable in view of the terminal disclaimer.

CONCLUSION

In view of the above, each of the presently pending claims in this application is believed to be in immediate condition for allowance. Accordingly, the Examiner is respectfully requested to withdraw the outstanding rejection of the claims and to pass this application to issue. If it is determined that a telephone conversation would expedite the prosecution of this application, the Examiner is invited to telephone the undersigned at the number given below.

If the Patent Office determines that an extension of time and/or other relief is required and such required relief has not already been requested, Applicant hereby petitions for any such required relief including extensions of time. The Director is hereby authorized to charge any fees which may be required by this paper to Deposit Account No. 50-4242, referencing docket no. 10004-2000116.

Dated: October 29, 2019

Respectfully submitted,

By /Lawrence Gabuzda/
Lawrence Gabuzda
Registration No. 51,711
Mauriel Kapouytian Woods LLP
15 W. 26th Street, 7th Floor
New York, New York 10010
(212) 524-6052
Attorney(s) for Applicant

Electronic Acknowledgement Receipt

EFS ID:	37593369
Application Number:	16403204
International Application Number:	
Confirmation Number:	1048
Title of Invention:	MEDIA USAGE MONITORING AND MEASUREMENT SYSTEM AND METHOD
First Named Inventor/Applicant Name:	Jonathan S. Steuer
Customer Number:	51417
Filer:	Lawrence R. Gabuzda/Emily Sullenberger
Filer Authorized By:	Lawrence R. Gabuzda
Attorney Docket Number:	10004-2000116
Receipt Date:	29-OCT-2019
Filing Date:	03-MAY-2019
Time Stamp:	15:49:44
Application Type:	Utility under 35 USC 111(a)

Payment information:

Submitted with Payment	no

File Listing:

Document Number	Document Description	File Name	File Size(Bytes)/ Message Digest	Multi Part /.zip	Pages (if appl.)
1		10004-2000116ResponsetoNFOAdated9-6-16.pdf	131850 8e3c166a84b0ab4861557aafc48b0550ac71e043	yes	6

	Multipart Description/PDF files in .zip description		
	Document Description	**Start**	**End**
	Amendment/Req. Reconsideration-After Non-Final Reject	1	1
	Claims	2	4
	Applicant Arguments/Remarks Made in an Amendment	5	6
Warnings:			
Information:			
	Total Files Size (in bytes):	131850	

This Acknowledgement Receipt evidences receipt on the noted date by the USPTO of the indicated documents, characterized by the applicant, and including page counts, where applicable. It serves as evidence of receipt similar to a Post Card, as described in MPEP 503.

New Applications Under 35 U.S.C. 111
If a new application is being filed and the application includes the necessary components for a filing date (see 37 CFR 1.53(b)-(d) and MPEP 506), a Filing Receipt (37 CFR 1.54) will be issued in due course and the date shown on this Acknowledgement Receipt will establish the filing date of the application.
National Stage of an International Application under 35 U.S.C. 371
If a timely submission to enter the national stage of an international application is compliant with the conditions of 35 U.S.C. 371 and other applicable requirements a Form PCT/DO/EO/903 indicating acceptance of the application as a national stage submission under 35 U.S.C. 371 will be issued in addition to the Filing Receipt, in due course.
New International Application Filed with the USPTO as a Receiving Office
If a new international application is being filed and the international application includes the necessary components for an international filing date (see PCT Article 11 and MPEP 1810), a Notification of the International Application Number and of the International Filing Date (Form PCT/RO/105) will be issued in due course, subject to prescriptions concerning national security, and the date shown on this Acknowledgement Receipt will establish the international filing date of the application.

Doc Code: DIST.E.FILE Document Description: Electronic Terminal Disclaimer - Filed	PTO/SB/26 U.S. Patent and Trademark Office Department of Commerce

Electronic Petition Request	**TERMINAL DISCLAIMER TO OBVIATE A DOUBLE PATENTING REJECTION OVER A "PRIOR" PATENT**
Application Number	16403204
Filing Date	03-May-2019
First Named Inventor	Jonathan Steuer
Attorney Docket Number	10004-2000116
Title of Invention	MEDIA USAGE MONITORING AND MEASUREMENT SYSTEM AND METHOD

☒ Filing of terminal disclaimer does not obviate requirement for response under 37 CFR 1.111 to outstanding Office Action

☒ This electronic Terminal Disclaimer is not being used for a Joint Research Agreement.

Owner	Percent Interest
Anonymous Media Research, LLC	100%

The owner(s) with percent interest listed above in the instant application hereby disclaims, except as provided below, the terminal part of the statutory term of any patent granted on the instant application which would extend beyond the expiration date of the full statutory term of prior patent number(s)

8296791

as the term of said prior patent is presently shortened by any terminal disclaimer. The owner hereby agrees that any patent so granted on the instant application shall be enforceable only for and during such period that it and the prior patent are commonly owned. This agreement runs with any patent granted on the instant application and is binding upon the grantee, its successors or assigns.

In making the above disclaimer, the owner does not disclaim the terminal part of the term of any patent granted on the instant application that would extend to the expiration date of the full statutory term of the prior patent, "as the term of said prior patent is presently shortened by any terminal disclaimer," in the event that said prior patent later:
- expires for failure to pay a maintenance fee;
- is held unenforceable;
- is found invalid by a court of competent jurisdiction;
- is statutorily disclaimed in whole or terminally disclaimed under 37 CFR 1.321;
- has all claims canceled by a reexamination certificate;
- is reissued; or
- is in any manner terminated prior to the expiration of its full statutory term as presently shortened by any terminal disclaimer.

◉ Terminal disclaimer fee under 37 CFR 1.20(d) is included with Electronic Terminal Disclaimer request.

○	I certify, in accordance with 37 CFR 1.4(d)(4), that the terminal disclaimer fee under 37 CFR 1.20(d) required for this terminal disclaimer has already been paid in the above-identified application.

Applicant claims the following fee status:

◉ Small Entity

○ Micro Entity

○ Regular Undiscounted

I hereby declare that all statements made herein of my own knowledge are true and that all statements made on information and belief are believed to be true; and further that these statements were made with the knowledge that willful false statements and the like so made are punishable by fine or imprisonment, or both, under Section 1001 of Title 18 of the United States Code and that such willful false statements may jeopardize the validity of the application or any patent issued thereon.

THIS PORTION MUST BE COMPLETED BY THE SIGNATORY OR SIGNATORIES

I certify, in accordance with 37 CFR 1.4(d)(4) that I am:

◉ An attorney or agent registered to practice before the Patent and Trademark Office who is of record in this application

Registration Number 51711

○ A sole inventor

○ A joint inventor; I certify that I am authorized to sign this submission on behalf of all of the inventors as evidenced by the power of attorney in the application

○ A joint inventor; all of whom are signing this request

Signature	/Lawrence Gabuzda/
Name	Lawrence Gabuzda

*Statement under 37 CFR 3.73(b) is required if terminal disclaimer is signed by the assignee (owner).
Form PTO/SB/96 may be used for making this certification. See MPEP § 324.

Electronic Patent Application Fee Transmittal

Application Number:	16403204
Filing Date:	03-May-2019
Title of Invention:	MEDIA USAGE MONITORING AND MEASUREMENT SYSTEM AND METHOD
First Named Inventor/Applicant Name:	Jonathan S. Steuer
Filer:	Lawrence R. Gabuzda/Emily Sullenberger
Attorney Docket Number:	10004-2000116

Filed as Small Entity

Filing Fees for Utility under 35 USC 111(a)

Description	Fee Code	Quantity	Amount	Sub-Total in USD($)
Basic Filing:				
STATUTORY OR TERMINAL DISCLAIMER	2814	1	160	160
Pages:				
Claims:				
Miscellaneous-Filing:				
Petition:				
Patent-Appeals-and-Interference:				
Post-Allowance-and-Post-Issuance:				

Description	Fee Code	Quantity	Amount	Sub-Total in USD($)
Extension-of-Time:				
Miscellaneous:				
			Total in USD ($)	**160**

Doc Code: DISQ.E.FILE
Document Description: Electronic Terminal Disclaimer – Approved

Application No.: 16403204

Filing Date: 03-May-2019

Applicant/Patent under Reexamination: Steuer

Electronic Terminal Disclaimer filed on October 29, 2019

☒ APPROVED

This patent is subject to a terminal disclaimer

☐ DISAPPROVED

Approved/Disapproved by: Electronic Terminal Disclaimer automatically approved by EFS-Web

U.S. Patent and Trademark Office

Electronic Acknowledgement Receipt	
EFS ID:	37591600
Application Number:	16403204
International Application Number:	
Confirmation Number:	1048
Title of Invention:	MEDIA USAGE MONITORING AND MEASUREMENT SYSTEM AND METHOD
First Named Inventor/Applicant Name:	Jonathan S. Steuer
Customer Number:	51417
Filer:	Lawrence R. Gabuzda/Emily Sullenberger
Filer Authorized By:	Lawrence R. Gabuzda
Attorney Docket Number:	10004-2000116
Receipt Date:	29-OCT-2019
Filing Date:	03-MAY-2019
Time Stamp:	15:29:07
Application Type:	Utility under 35 USC 111(a)

Payment information:

Submitted with Payment	yes
Payment Type	EFT
Payment was successfully received in RAM	$160
RAM confirmation Number	E20190SF29046353
Deposit Account	504242
Authorized User	Emily Sullenberger
The Director of the USPTO is hereby authorized to charge indicated fees and credit any overpayment as follows: 37 CFR 1.19 (Document supply fees) 37 CFR 1.20 (Post Issuance fees)	

37 CFR 1.21 (Miscellaneous fees and charges)

File Listing:

Document Number	Document Description	File Name	File Size(Bytes)/ Message Digest	Multi Part /.zip	Pages (if appl.)
1	Terminal Disclaimer-Filed (Electronic)	eTerminal-Disclaimer.pdf	33373 ed562e7fa0b4f3e5cf077a1e353be2e7654bd579	no	2
Warnings:					
Information:					
2	Fee Worksheet (SB06)	fee-info.pdf	30523 c3fd05ca7992b1d8ad5bf71e28588eebe3a22ad7	no	2
Warnings:					
Information:					
		Total Files Size (in bytes):	63896		

This Acknowledgement Receipt evidences receipt on the noted date by the USPTO of the indicated documents, characterized by the applicant, and including page counts, where applicable. It serves as evidence of receipt similar to a Post Card, as described in MPEP 503.

New Applications Under 35 U.S.C. 111
If a new application is being filed and the application includes the necessary components for a filing date (see 37 CFR 1.53(b)-(d) and MPEP 506), a Filing Receipt (37 CFR 1.54) will be issued in due course and the date shown on this Acknowledgement Receipt will establish the filing date of the application.
National Stage of an International Application under 35 U.S.C. 371
If a timely submission to enter the national stage of an international application is compliant with the conditions of 35 U.S.C. 371 and other applicable requirements a Form PCT/DO/EO/903 indicating acceptance of the application as a national stage submission under 35 U.S.C. 371 will be issued in addition to the Filing Receipt, in due course.
New International Application Filed with the USPTO as a Receiving Office
If a new international application is being filed and the international application includes the necessary components for an international filing date (see PCT Article 11 and MPEP 1810), a Notification of the International Application Number and of the International Filing Date (Form PCT/RO/105) will be issued in due course, subject to prescriptions concerning national security, and the date shown on this Acknowledgement Receipt will establish the international filing date of the application.

PTO/SB/06 (09-11)
Approved for use through 1/31/2014. OMB 0651-0032
U.S. Patent and Trademark Office; U.S. DEPARTMENT OF COMMERCE
Under the Paperwork Reduction Act of 1995, no persons are required to respond to a collection of information unless it displays a valid OMB control number.

PATENT APPLICATION FEE DETERMINATION RECORD Substitute for Form PTO-875	Application or Docket Number 16/403,204	Filing Date 05/03/2019	☐ To be Mailed

ENTITY: ☐ LARGE ☑ SMALL ☐ MICRO

APPLICATION AS FILED - PART I

FOR	(Column 1) NUMBER FILED	(Column 2) NUMBER EXTRA		RATE ($)	FEE ($)
☐ BASIC FEE (37 CFR 1.16(a), (b), or (c))	N/A	N/A		N/A	
☐ SEARCH FEE (37 CFR 1.16(k), (i), or (m))	N/A	N/A		N/A	
☐ EXAMINATION FEE (37 CFR 1.16(o), (p), or (q))	N/A	N/A		N/A	
TOTAL CLAIMS (37 CFR 1.16(i))	minus 20 =	*		x $50 =	
INDEPENDENT CLAIMS (37 CFR 1.16(h))	minus 3 =	*		x $230 =	
☐ APPLICATION SIZE FEE (37 CFR 1.16(s))	If the specification and drawings exceed 100 sheets of paper, the application size fee due is $310 ($155 for small entity) for each additional 50 sheets or fraction thereof. See 35 U.S.C. 41(a)(1)(G) and 37 CFR 1.16(s).				
☐ MULTIPLE DEPENDENT CLAIM PRESENT (37 CFR 1.16(j))					
* If the difference in column 1 is less than zero, enter "0" in column 2.				TOTAL	

APPLICATION AS AMENDED - PART II

AMENDMENT	10/29/2019	(Column 1) CLAIMS REMAINING AFTER AMENDMENT		(Column 2) HIGHEST NUMBER PREVIOUSLY PAID FOR	(Column 3) PRESENT EXTRA		RATE ($)	ADDITIONAL FEE ($)
	Total (37 CFR 1.16(i))	* 12	Minus	** 20	= 0		x $50 =	0
	Independent (37 CFR 1.16(h))	* 2	Minus	*** 3	= 0		x $230 =	0
	☐ Application Size Fee (37 CFR 1.16(s))							
	☐ FIRST PRESENTATION OF MULTIPLE DEPENDENT CLAIM (37 CFR 1.16(j))							
							TOTAL ADD'L FEE	0

AMENDMENT		(Column 1) CLAIMS REMAINING AFTER AMENDMENT		(Column 2) HIGHEST NUMBER PREVIOUSLY PAID FOR	(Column 3) PRESENT EXTRA		RATE ($)	ADDITIONAL FEE ($)
	Total (37 CFR 1.16(i))	*	Minus	**	=		x $0 =	
	Independent (37 CFR 1.16(h))	*	Minus	***	=		x $0 =	
	☐ Application Size Fee (37 CFR 1.16(s))							
	☐ FIRST PRESENTATION OF MULTIPLE DEPENDENT CLAIM (37 CFR 1.16(j))							
							TOTAL ADD'L FEE	

* If the entry in column 1 is less than the entry in column 2, write "0" in column 3.	LIE
** If the "Highest Number Previously Paid For" IN THIS SPACE is less than 20, enter "20".	/LAMONT N MCLAUCHLIN/
*** If the "Highest Number Previously Paid For" IN THIS SPACE is less than 3, enter "3".	
The "Highest Number Previously Paid For" (Total or Independent) is the highest number found in the appropriate box in column 1.	

This collection of information is required by 37 CFR 1.16. The information is required to obtain or retain a benefit by the public which is to file (and by the USPTO to process) an application. Confidentiality is governed by 35 U.S.C. 122 and 37 CFR 1.14. This collection is estimated to take 12 minutes to complete, including gathering, preparing, and submitting the completed application form to the USPTO. Time will vary depending upon the individual case. Any comments on the amount of time you require to complete this form and/or suggestions for reducing this burden, should be sent to the Chief Information Officer, U.S. Patent and Trademark Office, U.S. Department of Commerce, P.O. Box 1450, Alexandria, VA 22313-1450. DO NOT SEND FEES OR COMPLETED FORMS TO THIS ADDRESS. **SEND TO: Commissioner for Patents, P.O. Box 1450, Alexandria, VA 22313-1450.**

If you need assistance in completing the form, call 1-800-PTO-9199 and select option 2.

UNITED STATES PATENT AND TRADEMARK OFFICE

UNITED STATES DEPARTMENT OF COMMERCE
United States Patent and Trademark Office
Address: COMMISSIONER FOR PATENTS
P.O. Box 1450
Alexandria, Virginia 22313-1450
www.uspto.gov

APPLICATION NO.	FILING DATE	FIRST NAMED INVENTOR	ATTORNEY DOCKET NO.	CONFIRMATION NO.
16/403,204	05/03/2019	Jonathan S. Steuer	10004-2000116	1048

51417 7590 09/06/2019
Mauriel Kapouytian Woods LLP
15 W. 26th Street
7th Floor
New York, NY 10010

EXAMINER
DAVIS, CHENEA

ART UNIT	PAPER NUMBER
2421	

NOTIFICATION DATE	DELIVERY MODE
09/06/2019	ELECTRONIC

Please find below and/or attached an Office communication concerning this application or proceeding.

The time period for reply, if any, is set in the attached communication.

Notice of the Office communication was sent electronically on above-indicated "Notification Date" to the following e-mail address(es):

docket@mkwllp.com

PTOL-90A (Rev. 04/07)

Office Action Summary	Application No. 16/403,204	Applicant(s) Steuer et al.	
	Examiner CHENEA DAVIS	Art Unit 2421	AIA (FITF) Status No

-- The MAILING DATE of this communication appears on the cover sheet with the correspondence address --

Period for Reply

A SHORTENED STATUTORY PERIOD FOR REPLY IS SET TO EXPIRE 3 MONTHS FROM THE MAILING DATE OF THIS COMMUNICATION.

- Extensions of time may be available under the provisions of 37 CFR 1.136(a). In no event, however, may a reply be timely filed after SIX (6) MONTHS from the mailing date of this communication.
- If NO period for reply is specified above, the maximum statutory period will apply and will expire SIX (6) MONTHS from the mailing date of this communication.
- Failure to reply within the set or extended period for reply will, by statute, cause the application to become ABANDONED (35 U.S.C. § 133). Any reply received by the Office later than three months after the mailing date of this communication, even if timely filed, may reduce any earned patent term adjustment. See 37 CFR 1.704(b).

Status

1)☑ Responsive to communication(s) filed on 5/3/19.

☐ A declaration(s)/affidavit(s) under **37 CFR 1.130(b)** was/were filed on _____.

2a)☐ This action is **FINAL.** 2b) ☑ This action is non-final.

3)☐ An election was made by the applicant in response to a restriction requirement set forth during the interview on _____; the restriction requirement and election have been incorporated into this action.

4)☐ Since this application is in condition for allowance except for formal matters, prosecution as to the merits is closed in accordance with the practice under *Ex parte Quayle*, 1935 C.D. 11, 453 O.G. 213.

Disposition of Claims*

5) ☑ Claim(s) 1-12 is/are pending in the application.

5a) Of the above claim(s) _____ is/are withdrawn from consideration.

6) ☐ Claim(s) _____ is/are allowed.

7) ☑ Claim(s) 1-12 is/are rejected.

8) ☐ Claim(s) _____ is/are objected to.

9) ☐ Claim(s) _____ are subject to restriction and/or election requirement

* If any claims have been determined allowable, you may be eligible to benefit from the **Patent Prosecution Highway** program at a participating intellectual property office for the corresponding application. For more information, please see http://www.uspto.gov/patents/init_events/pph/index.jsp or send an inquiry to **PPHfeedback@uspto.gov.**

Application Papers

10)☐ The specification is objected to by the Examiner.

11)☑ The drawing(s) filed on 5/3/19 is/are: a)☑ accepted or b)☐ objected to by the Examiner.

Applicant may not request that any objection to the drawing(s) be held in abeyance. See 37 CFR 1.85(a).

Replacement drawing sheet(s) including the correction is required if the drawing(s) is objected to. See 37 CFR 1.121(d).

Priority under 35 U.S.C. § 119

12)☐ Acknowledgment is made of a claim for foreign priority under 35 U.S.C. § 119(a)-(d) or (f).

Certified copies:

a)☐ All b)☐ Some** c)☐ None of the:

1.☐ Certified copies of the priority documents have been received.

2.☐ Certified copies of the priority documents have been received in Application No. _____.

3.☐ Copies of the certified copies of the priority documents have been received in this National Stage application from the International Bureau (PCT Rule 17.2(a)).

** See the attached detailed Office action for a list of the certified copies not received.

Attachment(s)

1) ☑ Notice of References Cited (PTO-892)

2) ☑ Information Disclosure Statement(s) (PTO/SB/08a and/or PTO/SB/08b) Paper No(s)/Mail Date _____.

3) ☐ Interview Summary (PTO-413) Paper No(s)/Mail Date _____.

4) ☐ Other: _____.

DETAILED ACTION

1. The present application is being examined under the pre-AIA first to invent provisions.

Priority

2. Applicant's claim for the benefit of a prior-filed application under 35 U.S.C. 119(e) or under 35 U.S.C. 120, 121, 365(c), or 386(c) is acknowledged. This application claims priority as a Divisional application of 14/17581. However, this application appears to claim subject matter directed to an invention that is NOT independent and distinct from that claimed in the prior application, and names the inventor or at least one joint inventor named in the prior application. Additionally, the Applicants should please note that this application is NOT a result of a restriction requirement made in 14/175581, and is therefore not subject to the protections afforded by 35 USC 121, that "If two or more independent and distinct inventions are claimed in one application, the Director may require the application to be restricted to one of the inventions. If the other invention is made the subject of a divisional application which complies with the requirements of section 120 it shall be entitled to the benefit of the filing date of the original application. A patent issuing on an application with respect to which a requirement for restriction under this section has been made, or on an application filed as a result of such a requirement, shall not be used as a reference either in the Patent and Trademark Office or in the courts against a divisional application or against the original application or any patent issued on either of them, if the divisional application is filed before the issuance of the patent on the other application. The validity of a patent shall not be questioned for failure of the Director to require the application to be restricted to one invention".

Double Patenting

3. The nonstatutory double patenting rejection is based on a judicially created doctrine grounded in public policy (a policy reflected in the statute) so as to prevent the unjustified or improper timewise extension of the "right to exclude" granted by a patent and to prevent possible harassment by multiple assignees. A nonstatutory double patenting rejection is appropriate where the conflicting claims are not identical, but at least one examined application claim is not patentably distinct from the reference claim(s) because the examined application claim is either anticipated by, or would have been obvious over, the reference claim(s). See, e.g., *In re Berg*, 140 F.3d 1428, 46 USPQ2d 1226 (Fed. Cir. 1998); *In re Goodman*, 11 F.3d 1046, 29 USPQ2d 2010 (Fed. Cir. 1993); *In re Longi*, 759 F.2d 887, 225 USPQ 645 (Fed. Cir. 1985); *In re Van Ornum*, 686 F.2d 937, 214 USPQ 761 (CCPA 1982); *In re Vogel*, 422 F.2d 438, 164 USPQ 619 (CCPA 1970); *In re Thorington*, 418 F.2d 528, 163 USPQ 644 (CCPA 1969).

A timely filed terminal disclaimer in compliance with 37 CFR 1.321(c) or 1.321(d) may be used to overcome an actual or provisional rejection based on nonstatutory double patenting provided the reference application or patent either is shown to be commonly owned with the examined application, or claims an invention made as a result of activities undertaken within the scope of a joint research agreement. See MPEP § 717.02 for applications subject to examination under the first inventor to file provisions of the AIA as explained in MPEP § 2159. See MPEP §§ 706.02(l)(1) - 706.02(l)(3) for applications not subject to examination under the first inventor to file provisions of the AIA. A terminal disclaimer must be signed in compliance with 37 CFR 1.321(b).

The USPTO Internet website contains terminal disclaimer forms which may be used. Please visit www.uspto.gov/patent/patents-forms. The filing date of the application in which the form is filed determines what form (e.g., PTO/SB/25, PTO/SB/26, PTO/AIA/25, or PTO/AIA/26) should be used. A web-based eTerminal Disclaimer may be filled out completely online using web-screens. An eTerminal Disclaimer that meets all requirements is auto-processed and approved immediately upon submission. For more information about eTerminal Disclaimers, refer to www.uspto.gov/patents/process/file/efs/guidance/eTD-info-I.jsp.

4. Claims 1-12 are rejected on the ground of nonstatutory double patenting as being unpatentable over claims 1-11 of U.S. Patent No.8296791. Although the claims at issue are not identical, they are not patentably distinct from each other because the claims of the instant application are anticipated in every aspect expect that the instant claims are directed toward "video data", which is an obvious variant of the "audio data" as in the patented claims.

Claim Rejections - 35 USC § 103

5. The following is a quotation of pre-AIA 35 U.S.C. 103(a) which forms the basis for all obviousness rejections set forth in this Office action:

> (a) A patent may not be obtained though the invention is not identically disclosed or described as set forth in section 102, if the differences between the subject matter sought to be patented and the prior art are such that the subject matter as a whole would have been obvious at the time the invention was made to a person having ordinary skill in the art to which said subject matter pertains. Patentability shall not be negatived by the manner in which the invention was made.

6. Claim 1 is rejected under pre-AIA 35 U.S.C. 103(a) as being unpatentable over Kolessar et al. (US7483975, hereinafter Kolessar) in view of Wang et al. (US20020083060, hereinafter Wang) and Hansen et al. (US20020038456, hereinafter Hansen).

Regarding claim 1, Kolessar discloses a media measurement method (see Kolessar, Figs. 1 and 2) comprising:

submitted data samples corresponding to video data samples captured at a monitoring device associated with a monitored audience member (see Kolessar, col 7, lines 33-41, col 8, lines 55-60 and lines 66-67, col 9, lines 3-6 and col 18, lines 47-52),

using one or more computers to utilize sample sequence data and content offset data (content offset data limitation, see Kolessar, col 9, line 48 and incorporated-by-reference patent US5512933 to Wheatley, col 2, lines 22-28, col 3, lines 9-19 and col 5, lines 47-55) to deduce play-altering actions of a monitored audience member, the sample sequence data corresponding to a sequence of the content identification results (Kolessar teaches that a lack of the reproduction of an audio signal may be determined by examining the measurement data pertaining to three consecutive time periods, wherein during the first and third time periods, the indication data is provided, but during the second time period, the indication is not provided. For example, for three consecutive time periods, it may be determined that the submitted samples are three consecutive portions of a particular program {see Kolessar, col 18, lines 47-52 and Fig. 10}, where the first and third samples produce an indication code, but where the second sample does not produce the indication code, then it may be determined that a specific portion of the program was muted by the user for a certain amount of time. Kolessar's measurement data of three consecutive time periods may also be used to deduce other play-altering actions {see Kolessar, col 7, lines 30-32}, such as

changing a channel/switching to a different program {see Kolessar, col 19, lines 64-65}. For example, for three consecutive time periods, it may be determined that that the first two submitted samples correspond to two consecutive portions of a program, and the third corresponds to a different program {see Kolessar, Fig. 10}, thereby indicating that a user switched programs/changed channels. Therefore, the limitation as claimed is reasonably met).

Kolessar does not specifically disclose generating a play stream of content identification results corresponding to a sequence of submitted data samples.

In an analogous art relating to a system for identifying media, Wang discloses content identification results (see Wang, [0105], lines 1-18) corresponding to a sequence of submitted data samples (see Wang, [0090], lines 1-3).

It would have been obvious for a person having ordinary skill in the art at the time of the invention to modify Kolessar's system to include the limitations as taught by Wang for the advantage of providing an improved system for gathering media usage information on identified media that may be recognized in real time, recognized when mixed together with other recordings in a single stream, and recognized when subjected to high levels of noise and distortion.

Kolessar in view of Wang does not specifically disclose generating a play stream of results.

In an analogous art relating to a system for providing media to a user, Hansen discloses generating a play stream of results (see Hansen, [0027], lines 2-6).

It would have been obvious for a person having ordinary skill in the art at the time of the invention to modify the system of Kolessar in view of Wang to include the limitations as taught by Hansen for the advantage of providing an improved system for gathering media usage information on identified media in which the results of the identifications are provided in an economically viable and continuous manner (see Hansen, [0009]).

Conclusion

7. Any inquiry concerning this communication or earlier communications from the examiner should be directed to CHENEA DAVIS whose telephone number is (571)272-9524. The examiner can normally be reached on M-F: 8:00 am - 4:00 pm.

Examiner interviews are available via telephone, in-person, and video conferencing using a USPTO supplied web-based collaboration tool. To schedule an interview, applicant is encouraged to use the USPTO Automated Interview Request (AIR) at http://www.uspto.gov/interviewpractice.

If attempts to reach the examiner by telephone are unsuccessful, the examiner's supervisor, Nathan Flynn can be reached on 571-272-1915. The fax phone number for the organization where this application or proceeding is assigned is 571-273-8300.

Information regarding the status of an application may be obtained from the Patent Application Information Retrieval (PAIR) system. Status information for published applications may be obtained from either Private PAIR or Public PAIR. Status information for unpublished applications is available through Private PAIR only. For more information about the PAIR system, see http://pair-direct.uspto.gov. Should you have questions on access to the Private PAIR system, contact the Electronic Business Center (EBC) at 866-217-9197 (toll-free). If you would like assistance from a USPTO Customer Service Representative or access to the automated information system, call 800-786-9199 (IN USA OR CANADA) or 571-272-1000.

/CHENEA DAVIS/
Primary Examiner, Art Unit 2421

Notice of References Cited	Application/Control No. 16/403,204	Applicant(s)/Patent Under Reexamination Steuer et al.	
	Examiner CHENEA DAVIS	Art Unit 2421	Page 1 of 1

U.S. PATENT DOCUMENTS

*		Document Number Country Code-Number-Kind Code	Date MM-YYYY	Name	CPC Classification	US Classification
*	A	US-7483975-B2	01-2009	Kolessar; Ronald S.	G06Q30/02	709/205
*	B	US-20020083060-A1	06-2002	Wang, Avery Li-Chun	G10L17/26	1/1
*	C	US-20020038456-A1	03-2002	Hansen, Michael W.	H04N7/17318	725/46
*	D	US-5512933-A	04-1996	Wheatley; Mark A.	H04H60/372	725/19
	E					
	F					
	G					
	H					
	I					
	J					
	K					
	L					
	M					

FOREIGN PATENT DOCUMENTS

*		Document Number Country Code-Number-Kind Code	Date MM-YYYY	Country	Name	CPC Classification
	N					
	O					
	P					
	Q					
	R					
	S					
	T					

NON-PATENT DOCUMENTS

*		Include as applicable: Author, Title Date, Publisher, Edition or Volume, Pertinent Pages)
	U	
	V	
	W	
	X	

*A copy of this reference is not being furnished with this Office action. (See MPEP § 707.05(a).)
Dates in MM-YYYY format are publication dates. Classifications may be US or foreign.

Index of Claims	Application/Control No.	Applicant(s)/Patent Under Reexamination
	16/403,204	Steuer et al.
	Examiner	**Art Unit**
	CHENEA DAVIS	2421

✓	Rejected	-	Cancelled	N	Non-Elected	A	Appeal
=	Allowed	÷	Restricted	I	Interference	O	Objected

CLAIMS

☐ Claims renumbered in the same order as presented by applicant ☐ CPA ☐ T.D. ☐ R.1.47

CLAIM		DATE								
Final	Original	09/03/2019								
	1	✓								
	2	✓								
	3	✓								
	4	✓								
	5	✓								
	6	✓								
	7	✓								
	8	✓								
	9	✓								
	10	✓								
	11	✓								
	12	✓								

Search Notes	Application/Control No.	Applicant(s)/Patent Under Reexamination
	16/403,204	Steuer et al.
	Examiner	**Art Unit**
	CHENEA DAVIS	2421

CPC - Searched*		
Symbol	**Date**	**Examiner**
G06Q30/0246 H04L67/22 H04L65/60 H04N21/$6	09/03/2019	CD

CPC Combination Sets - Searched*		
Symbol	**Date**	**Examiner**

US Classification - Searched*			
Class	**Subclass**	**Date**	**Examiner**

* See search history printout included with this form or the SEARCH NOTES box below to determine the scope of the search.

Search Notes		
Search Notes	**Date**	**Examiner**
EAST search results included	09/03/2019	CD
Inventor search included - see search results printout	09/03/2019	CD
class search (725), cpc search (see above) - text search only, see search results printout	09/03/2019	CD

Interference Search			
US Class/CPC Symbol	**US Subclass/CPC Group**	**Date**	**Examiner**
	see search results printout	09/03/2019	CD

/CHENEA DAVIS/ Primary Examiner, Art Unit 2421	

EAST Search History

EAST Search History (Prior Art)

Ref #	Hits	Search Query	DBs	Default Operator	Plurals	Time Stamp
L1	9	("7444353" | "20080154401" | "7483975" | "20060059277" | "7038619" | "20020072982" | "20050086682" | "20070143777" | "7779415").PN.	US-PGPUB; USPAT; EPO	OR	ON	2019/09/03 09:28
L2	1	"20020083060".pn.	US-PGPUB; USPAT; EPO	OR	ON	2019/09/03 09:37
L3	4	("20020038456" | "20020083060" | "5512933" | "7483975").PN.	US-PGPUB; USPAT; EPO	OR	ON	2019/09/03 09:41
L4	135	("20020010919" | "20020038456" | "20020059577" | "20020072982" | "20020083060" | "20020161741" | "20030009469" | "20030135623" | "20030177488" | "20040001161" | "20040034441" | "20040048637" | "20040055445" | "20040122679" | "20040224638" | "20050086682" | "20060059277" | "20070143777" | "20080154401" | "3919479" | "4677466" | "4697209" | "5095382" | "5210366" | "5404161" | "5436653" | "5437050" | "5512933" | "5594934" | "5758257" | "5844938" | "5945988" | "6513161" | "6990453" | "7038619" | "7444353" | "7483975" | "7634787" | "7779415" | "8131389" | "8296791" | "8510768" | "8677389" | "8756622").PN.	US-PGPUB; USPAT; USOCR; FPRS; EPO; JPO; DERWENT; IBM_TDB	OR	OFF	2019/09/03 09:52
L5	4	steuer.in. and (play$1altering).clm.	US-PGPUB; USPAT; USOCR; FPRS; EPO; JPO; DERWENT; IBM_TDB	OR	OFF	2019/09/03 10:21
L6	1	16/403204.app. and (offset$1 with (tim$3 (tim$3 near code$1)))	US-PGPUB; USPAT; USOCR; FPRS; EPO; JPO; DERWENT; IBM_TDB	OR	OFF	2019/09/03 10:25
L7	1	16/403204.app. and (offset$1 with (tim$3 near code$1))	US-PGPUB; USPAT; USOCR; FPRS; EPO; JPO; DERWENT; IBM_TDB	OR	OFF	2019/09/03 10:26

L8	1	16/403204.app. and ((tim$3 near code$1))	US-PGPUB; USPAT; USOCR; FPRS; EPO; JPO; DERWENT; IBM_TDB	OR	OFF	2019/09/03 10:26
L9	0	11/139330.app. and ((tim$3 near code$1))	US-PGPUB; USPAT; USOCR; FPRS; EPO; JPO; DERWENT; IBM_TDB	OR	OFF	2019/09/03 10:27
L10	1	11/139330.app.	US-PGPUB; USPAT; USOCR; FPRS; EPO; JPO; DERWENT; IBM_TDB	OR	OFF	2019/09/03 10:27
L11	2	steuer.in. and (offset$1 with (tim$3 near code$1))	US-PGPUB; USPAT; USOCR; FPRS; EPO; JPO; DERWENT; IBM_TDB	OR	OFF	2019/09/03 11:12
L12	2	steuer.in. and (offset$1 and (timecode$1 (tim$3 near code$1)))	US-PGPUB; USPAT; USOCR; FPRS; EPO; JPO; DERWENT; IBM_TDB	OR	OFF	2019/09/03 11:12
L13	19908	(viewer$1 user$1 audience$1) with expos$4 with (media content$1 video$1 music$1 audio song$1)	US-PGPUB; USPAT; USOCR; FPRS; EPO; JPO; DERWENT; IBM_TDB	OR	OFF	2019/09/03 11:13
L14	553	L13 and (detect$4 with (paus$3 rewind$3 skip$4))	US-PGPUB; USPAT; USOCR; FPRS; EPO; JPO; DERWENT; IBM_TDB	OR	OFF	2019/09/03 11:13
L15	46928	(G06Q30/0246 H04L67/22 H04L65/60).cpc.	US-PGPUB; USPAT; USOCR; FPRS; EPO; JPO; DERWENT; IBM_TDB	OR	OFF	2019/09/03 11:13
L16	118	L14 and L15	US-PGPUB; USPAT; USOCR; FPRS; EPO; JPO;	OR	OFF	2019/09/03 11:13

			DERWENT; IBM_TDB			
L17	13	((Jonathan) near2 (Steuer)).INV.	US-PGPUB; USPAT; USOCR	OR	OFF	2019/09/03 11:13
L18	26	((Christopher) near2 (Otto)).INV.	US-PGPUB; USPAT; USOCR	OR	OFF	2019/09/03 11:13
L19	26	L17 L18	US-PGPUB; USPAT; USOCR; FPRS; EPO; JPO; DERWENT; IBM_TDB	OR	OFF	2019/09/03 11:13
L20	2	19 and ((tim$3 near code$1))	US-PGPUB; USPAT; USOCR; FPRS; EPO; JPO; DERWENT; IBM_TDB	OR	OFF	2019/09/03 11:14
L21	4	("20020038456" | "20020083060" | "5512933" | "7483975").PN.	US-PGPUB; USPAT; EPO	OR	ON	2019/09/03 11:31
S1	91	("20020161741" | "4677466" | "20020083060" | "7444353" | "20020038456" | "6990453" | "20040224638" | "20020059577" | "20040122679" | "3919479" | "7483975" | "20030009469" | "20040001161" | "20020072982" | "7038619" | "4697209" | "20020072982" | "5095382" | "20050086682" | "5594934" | "5778137" | "20060059277" | "20020010919" | "5945988" | "6513161" | "20020010919" | "5758257" | "5512933" | "20070143777" | "5437050" | "7779415" | "20040048637").PN.	US-PGPUB; USPAT; USOCR; FPRS; EPO; JPO; DERWENT; IBM_TDB	OR	OFF	2016/07/10 15:25
S2	68	(arbotron nielsen).as. and paus$3	US-PGPUB; USPAT; USOCR; FPRS; EPO; JPO; DERWENT; IBM_TDB	OR	OFF	2016/07/10 15:36
S3	7	S2 and (@ad<"20040527")	US-PGPUB; USPAT; USOCR; FPRS; EPO; JPO; DERWENT; IBM_TDB	OR	OFF	2016/07/10 15:37
S4	79	(arbitron nielsen).as. and paus$3	US-PGPUB; USPAT; USOCR; FPRS; EPO; JPO; DERWENT;	OR	OFF	2016/07/10 15:37

			IBM_TDB			
S5	12	S4 and (@ad< "20040527")	US-PGPUB; USPAT; USOCR; FPRS; EPO; JPO; DERWENT; IBM_TDB	OR	OFF	2016/07/10 15:37
S6	2	10/483825.app.	US-PGPUB; USPAT; USOCR; FPRS; EPO; JPO; DERWENT; IBM_TDB	OR	OFF	2016/07/10 15:50
S7	2	"6184918".pn.	US-PGPUB; USPAT; USOCR; FPRS; EPO; JPO; DERWENT; IBM_TDB	OR	OFF	2016/07/10 20:37
S8	17	("20020072982" | "20050086682" | "20060059277" | "7038619" | "7444353" | "7779415").PN.	US-PGPUB; USPAT; USOCR; FPRS; EPO; JPO; DERWENT; IBM_TDB	OR	OFF	2016/07/10 21:02
S9	13275	(viewer$1 user$1 audience$1) with expos$4 with (media content$1 video$1 music$1 audio song$1)	US-PGPUB; USPAT; USOCR; FPRS; EPO; JPO; DERWENT; IBM_TDB	OR	OFF	2016/07/11 01:39
S10	333	S9 and (detect$4 with (paus$3 rewind$3 skip$4))	US-PGPUB; USPAT; USOCR; FPRS; EPO; JPO; DERWENT; IBM_TDB	OR	OFF	2016/07/11 01:39
S11	63038	"725".clas.	US-PGPUB; USPAT; USOCR; FPRS; EPO; JPO; DERWENT; IBM_TDB	OR	OFF	2016/07/11 01:39
S12	203	S10 AND ((H04N21/812 OR H04N21/44008 OR H04N21/4394 OR H04N21/4126 OR H04N21/23 OR H04N21/258 OR H04N21/25866 OR H04N21/4227 OR H04N21/4334 OR H04N21/47214 OR H04N21/478 OR H04N21/4788 OR H04N21/632 OR H04N21/6543 OR H04N21/8133 OR H04N21/25891 OR H04N21/44222 OR H04N21/2407 OR H04N21/2668 OR H04N21/4532 OR H04N21/4622 OR	US-PGPUB; USPAT; USOCR; FPRS; EPO; JPO; DERWENT; IBM_TDB	OR	OFF	2016/07/11 01:40

		H04N21/84 OR H04N21/6175 OR H04N21/6582 OR H04N21/2393 OR H04N21/2541 OR H04N21/25883 OR H04N21/41407 OR H04N21/4627 OR H04N21/47205 OR H04N21/4725 OR H04N21/4821 OR H04N21/8586 OR H04N21/23424 OR H04N21/23617 OR H04N21/2387 OR H04N21/251 OR H04N21/2543 OR H04N21/25875 OR H04N21/26266 OR H04N21/2665 OR H04N21/4314 OR H04N21/4316 OR H04N21/44 OR H04N21/44204 OR H04N21/4756 OR H04N21/4786 OR H04N21/6125 OR H04N21/64322 OR H04N21/8358 OR H04N21/858 OR H04N21/26258 OR H04N21/42203 OR H04N21/442 OR H04N21/44218 OR H04N21/8405 OR H04N21/435 OR H04N21/44213 OR H04N21/4826 OR H04N21/6587 OR H04N21/8352 OR H04N21/2187 OR H04N21/23614 OR H04N21/25841 OR H04N21/26603 OR H04N21/4122 OR H04N21/42204 OR H04N21/4223 OR H04N21/4307 OR H04N21/431 OR H04N21/43615 OR H04N21/4367 OR H04N21/437 OR H04N21/458 OR H04N21/466 OR H04N21/4668 OR H04N21/472 OR H04N21/4828 OR H04N21/80 OR H04N21/8456 OR H04N5/60 OR H04N7/17318 OR H04N13/0062 OR H04N13/0239 OR H04N13/044 OR H04N13/0495 OR H04N2005/2255 OR H04N21/23418 OR H04N21/23439 OR H04N21/2347 OR H04N21/24 OR H04N21/25435 OR H04N21/262 OR H04N21/26613 OR H04N21/42201 OR H04N21/42684 OR H04N21/4335 OR H04N21/4398 OR H04N21/4405 OR H04N21/441 OR H04N21/44209 OR H04N21/4424 OR H04N21/45 OR H04N21/4542 OR H04N21/4623 OR H04N21/4667 OR H04N21/47 OR H04N21/47217 OR H04N21/4722 OR H04N21/4755 OR H04N21/4758 OR H04N21/4784 OR H04N21/4825 OR H04N21/485 OR H04N21/6371 OR H04N21/6581 OR H04N21/8126 OR H04N21/8355 OR H04N21/8455 OR H04N21/854 OR H04N21/8543 OR H04N5/225 OR H04N5/23206 OR H04N5/32 OR H04N5/3205 OR H04N5/321 OR H04N5/77 OR H04N5/783 OR H04N5/93 OR H04N7/17327 OR H04N7/185).CPC.)				
S13	25328	(G06Q30/0246 H04L67/22 H04L65/60).cpc.	US-PGPUB; USPAT; USOCR; FPRS; EPO; JPO; DERWENT; IBM_TDB	OR	OFF	2016/07/11 01:40
S14	47	S10 and S13	US-PGPUB; USPAT;	OR	OFF	2016/07/11 01:40

			USOCR; FPRS; EPO; JPO; DERWENT; IBM_TDB			
S15	67	S10 and S11	US-PGPUB; USPAT; USOCR; FPRS; EPO; JPO; DERWENT; IBM_TDB	OR	OFF	2016/07/11 01:41
S16	44	S10 and (@ad<"20040527")	US-PGPUB; USPAT; USOCR; FPRS; EPO; JPO; DERWENT; IBM_TDB	OR	OFF	2016/07/11 01:41
S17	32	S16 AND ((H04N21/2347 OR H04N21/2541 OR H04N21/4143 OR H04N21/4405 OR H04N21/4627 OR H04N21/25875 OR H04N21/8355 OR H04N21/235 OR H04N21/2362 OR H04N21/2543 OR H04N21/2547 OR H04N21/4345 OR H04N21/435 OR H04N21/44204 OR H04N21/443 OR H04N21/4753 OR H04N21/6581 OR H04N21/8166 OR H04N21/835 OR H04N21/83555 OR H04N21/8358 OR H04N7/162 OR H04N7/17309 OR H04N21/23476 OR H04N2005/91364 OR H04N21/42646 OR H04N21/4325 OR H04N5/913 OR H04N7/163 OR H04N5/765 OR H04N5/77 OR H04N5/775 OR H04N5/781 OR H04N5/85 OR H04N9/8042 OR H04N19/107 OR H04N19/124 OR H04N19/14 OR H04N19/142 OR H04N19/149 OR H04N19/15 OR H04N19/152 OR H04N19/176 OR H04N19/179 OR H04N19/503 OR H04N19/61 OR H04N21/26613 OR H04N21/4623 OR H04N19/42 OR H04N19/87 OR H04N21/25816 OR H04N21/4316 OR H04N21/454 OR H04N21/47 OR H04N21/47214 OR H04N21/6334 OR H04N5/76).CPC.)	US-PGPUB; USPAT; USOCR; FPRS; EPO; JPO; DERWENT; IBM_TDB	OR	OFF	2016/07/11 01:41
S18	16	(signal$3 near2 user$1 near2 expos$4).clm.	US-PGPUB; USPAT; USOCR; FPRS; EPO; JPO; DERWENT; IBM_TDB	OR	OFF	2016/07/11 01:49
S19	12	((Jonathan) near2 (Steuer)).INV.	US-PGPUB; USPAT; USOCR	OR	OFF	2016/07/11 01:49
S20	24	((Christopher) near2 (Otto)).INV.	US-PGPUB; USPAT; USOCR	OR	OFF	2016/07/11 01:49
S21	24	S19 S20	US-PGPUB;	OR	OFF	2016/07/11

			USPAT; USOCR; FPRS; EPO; JPO; DERWENT; IBM_TDB			01:49
S22	2	S18 and S21	US-PGPUB; USPAT; USOCR; FPRS; EPO; JPO; DERWENT; IBM_TDB	OR	OFF	2016/07/11 01:49
S23	12	("20020038456" | "20020083060" | "5512933" | "7483975").PN.	US-PGPUB; USPAT; USOCR; FPRS; EPO; JPO; DERWENT; IBM_TDB	OR	OFF	2017/04/01 13:13
S24	2	("20080154401").PN.	US-PGPUB; USPAT; USOCR; FPRS; EPO; JPO; DERWENT; IBM_TDB	OR	OFF	2017/04/01 13:14
S25	0	wo-2003091990-$.did.	US-PGPUB; USPAT; USOCR; FPRS; EPO; JPO; DERWENT; IBM_TDB	OR	OFF	2017/04/01 13:23
S26	0	wo-2003/091990-$.did.	US-PGPUB; USPAT; USOCR; FPRS; EPO; JPO; DERWENT; IBM_TDB	OR	OFF	2017/04/01 13:23
S27	0	wo-03/091990-$.did.	US-PGPUB; USPAT; USOCR; FPRS; EPO; JPO; DERWENT; IBM_TDB	OR	OFF	2017/04/01 13:23
S28	3	wo-03091990-$.did.	US-PGPUB; USPAT; USOCR; FPRS; EPO; JPO; DERWENT; IBM_TDB	OR	OFF	2017/04/01 13:23
S29	3	10/978313.app.	US-PGPUB; USPAT; USOCR; FPRS; EPO; JPO; DERWENT;	OR	OFF	2017/04/01 13:23

			IBM_TDB			
S30	32536	(h04l65/60 h04l67/22 g06q30/0246).cpc.	US-PGPUB; USPAT; USOCR; FPRS; EPO; JPO; DERWENT; IBM_TDB	OR	OFF	2017/04/01 14:13
S31	64	S30 and ((media content$1) near offset$1)	US-PGPUB; USPAT; USOCR; FPRS; EPO; JPO; DERWENT; IBM_TDB	OR	OFF	2017/04/01 14:14
S32	0	S31 and (@ad<"20040527")	US-PGPUB; USPAT; USOCR; FPRS; EPO; JPO; DERWENT; IBM_TDB	OR	OFF	2017/04/01 14:14
S33	17	(signal$3 near2 user$1 near2 expos$4).clm.	US-PGPUB; USPAT; USOCR; FPRS; EPO; JPO; DERWENT; IBM_TDB	OR	OFF	2017/04/01 14:17
S34	12	((Jonathan) near2 (Steuer)).INV.	US-PGPUB; USPAT; USOCR	OR	OFF	2017/04/01 14:17
S35	24	((Christopher) near2 (Otto)).INV.	US-PGPUB; USPAT; USOCR	OR	OFF	2017/04/01 14:17
S36	24	S34 S35	US-PGPUB; USPAT; USOCR; FPRS; EPO; JPO; DERWENT; IBM_TDB	OR	OFF	2017/04/01 14:17
S37	2	S33 and S36	US-PGPUB; USPAT; USOCR; FPRS; EPO; JPO; DERWENT; IBM_TDB	OR	OFF	2017/04/01 14:17
S38	5	S36 and (offset$1.clm.)	US-PGPUB; USPAT; USOCR; FPRS; EPO; JPO; DERWENT; IBM_TDB	OR	OFF	2017/04/01 14:18
S39	64525	"725".clas.	US-PGPUB; USPAT; USOCR; FPRS;	OR	OFF	2017/04/01 14:18

			EPO; JPO; DERWENT; IBM_TDB			
S40	1	S31 and S39	US-PGPUB; USPAT; USOCR; FPRS; EPO; JPO; DERWENT; IBM_TDB	OR	OFF	2017/04/01 14:18
S41	21	("7444353" | "20080154401" | "7483975" | "20060059277" | "7038619" | "20020072982" | "20050086682" | "7779415").PN.	US-PGPUB; USPAT; USOCR; FPRS; EPO; JPO; DERWENT; IBM_TDB	OR	OFF	2018/03/29 16:26
S42	1	14/175811.app.	US-PGPUB; USPAT; USOCR; FPRS; EPO; JPO; DERWENT; IBM_TDB	OR	OFF	2018/03/29 17:07
S43	2	"20080154401".pn.	US-PGPUB; USPAT; USOCR; FPRS; EPO; JPO; DERWENT; IBM_TDB	OR	OFF	2018/03/29 17:11
S44	1076416	(determin$6 detect$4 deduc$5) near3 (channel$1 sourc$3 station$1)	US-PGPUB; USPAT; USOCR; FPRS; EPO; JPO; DERWENT; IBM_TDB	OR	OFF	2018/03/29 17:15
S45	297	(determin$6 detect$4 deduc$5) near3 (channel$1 sourc$3 station$1) near3 (sequen$6 near3 (sampl$4 clip$4))	US-PGPUB; USPAT; USOCR; FPRS; EPO; JPO; DERWENT; IBM_TDB	OR	OFF	2018/03/29 17:16
S46	139	@ad< "20050526" and S45	US-PGPUB; USPAT; USOCR; FPRS; EPO; JPO; DERWENT; IBM_TDB	OR	OFF	2018/03/29 17:16
S47	0	S46 and ((media video$1 content$1 audio$1 music$1 song$1) near recogni$7)	US-PGPUB; USPAT; USOCR; FPRS; EPO; JPO; DERWENT; IBM_TDB	OR	OFF	2018/03/29 17:17
S48	0	S46 and ((media video$1 content$1 audio$1 music$1 song$1 sampl$3)	US-PGPUB; USPAT;	OR	OFF	2018/03/29 17:17

		near recogni$7)	USOCR; FPRS; EPO; JPO; DERWENT; IBM_TDB			
S49	1	S46 and ((media video$1 content$1 audio$1 music$1 song$1 sampl$3) near2 recogni$7)	US-PGPUB; USPAT; USOCR; FPRS; EPO; JPO; DERWENT; IBM_TDB	OR	OFF	2018/03/29 17:17
S50	1740	((determin$6 detect$4 deduc$5) near3 (channel$1 sourc$3 station$1)) with ((order$3 sequen$6) near2 (sampl$4 clip$4 music$1 song$1 video$1 content$1 media$1))	US-PGPUB; USPAT; USOCR; FPRS; EPO; JPO; DERWENT; IBM_TDB	OR	OFF	2018/03/29 17:19
S51	566	@ad< "20050526" and S50	US-PGPUB; USPAT; USOCR; FPRS; EPO; JPO; DERWENT; IBM_TDB	OR	OFF	2018/03/29 17:19
S52	44	S51 and ((media video$1 content$1 audio$1 music$1 song$1 sampl$3) near3 recogni$7)	US-PGPUB; USPAT; USOCR; FPRS; EPO; JPO; DERWENT; IBM_TDB	OR	OFF	2018/03/29 17:19
S53	105850	((media video$1 audio$1 music$1 song$1 sampl$3) near3 recogni$7)	US-PGPUB; USPAT; USOCR; FPRS; EPO; JPO; DERWENT; IBM_TDB	OR	OFF	2018/03/29 17:22
S54	4361	S53 and ((Sequen$6 order$3) near (sampl$4 clip$4))	US-PGPUB; USPAT; USOCR; FPRS; EPO; JPO; DERWENT; IBM_TDB	OR	OFF	2018/03/29 17:23
S55	11	("4843562" "5210820" "20020083060").pn.	US-PGPUB; USPAT; USOCR; FPRS; EPO; JPO; DERWENT; IBM_TDB	OR	OFF	2018/03/29 17:30
S56	105850	((media video$1 audio$1 music$1 song$1 sampl$3) near3 recogni$7)	US-PGPUB; USPAT; USOCR; FPRS; EPO; JPO; DERWENT; IBM_TDB	OR	OFF	2018/03/29 21:52

S57	20459	S56 and ((Sequen$6 order$3) near3 (music audio video$1 media song$1))	US-PGPUB; USPAT; USOCR; FPRS; EPO; JPO; DERWENT; IBM_TDB	OR	OFF	2018/03/29 21:52
S58	3434	S57 and ((deduc$3 infer$4 detect$4 determin$6) near2 (station$1 source$1 channel$1 album$1))	US-PGPUB; USPAT; USOCR; FPRS; EPO; JPO; DERWENT; IBM_TDB	OR	OFF	2018/03/29 21:53
S59	610	((deduc$3 infer$4 detect$4 determin$6) near2 (station$1 source$1 channel$1 album$1)) with ((Sequen$6 order$3) near3 (music audio video$1 media song$1))	US-PGPUB; USPAT; USOCR; FPRS; EPO; JPO; DERWENT; IBM_TDB	OR	OFF	2018/03/29 21:54
S60	174	S59 and (@ad<"20040527")	US-PGPUB; USPAT; USOCR; FPRS; EPO; JPO; DERWENT; IBM_TDB	OR	OFF	2018/03/29 21:55
S61	12	S56 and S60	US-PGPUB; USPAT; USOCR; FPRS; EPO; JPO; DERWENT; IBM_TDB	OR	OFF	2018/03/29 21:55
S62	9624	S56 and ((Sequen$6) near3 (music video$1 media song$1))	US-PGPUB; USPAT; USOCR; FPRS; EPO; JPO; DERWENT; IBM_TDB	OR	OFF	2018/03/29 21:57
S63	1600	S62 and ((deduc$3 infer$4 detect$4 determin$6) near2 (station$1 source$1 channel$1 album$1))	US-PGPUB; USPAT; USOCR; FPRS; EPO; JPO; DERWENT; IBM_TDB	OR	OFF	2018/03/29 21:57
S64	315	S63 and (@ad<"20040527")	US-PGPUB; USPAT; USOCR; FPRS; EPO; JPO; DERWENT; IBM_TDB	OR	OFF	2018/03/29 21:57
S65	315	S56 and S64	US-PGPUB; USPAT; USOCR; FPRS; EPO; JPO;	OR	OFF	2018/03/29 21:58

			DERWENT; IBM_TDB			
S66	154	S65 and offset$1	US-PGPUB; USPAT; USOCR; FPRS; EPO; JPO; DERWENT; IBM_TDB	OR	OFF	2018/03/29 21:58
S67	154	S65 and offset$3	US-PGPUB; USPAT; USOCR; FPRS; EPO; JPO; DERWENT; IBM_TDB	OR	OFF	2018/03/29 21:58
S68	94	S67 and (music song$1)	US-PGPUB; USPAT; USOCR; FPRS; EPO; JPO; DERWENT; IBM_TDB	OR	OFF	2018/03/29 21:59
S69	987	S56 and ((Sequen$6) near3 (music song$1))	US-PGPUB; USPAT; USOCR; FPRS; EPO; JPO; DERWENT; IBM_TDB	OR	OFF	2018/03/29 22:00
S70	216	S69 and ((deduc$3 infer$4 detect$4 determin$6) near2 (station$1 source$1 channel$1 album$1))	US-PGPUB; USPAT; USOCR; FPRS; EPO; JPO; DERWENT; IBM_TDB	OR	OFF	2018/03/29 22:00
S71	216	S56 and S70	US-PGPUB; USPAT; USOCR; FPRS; EPO; JPO; DERWENT; IBM_TDB	OR	OFF	2018/03/29 22:01
S72	83	S71 and (@ad<"20040527")	US-PGPUB; USPAT; USOCR; FPRS; EPO; JPO; DERWENT; IBM_TDB	OR	OFF	2018/03/29 22:01
S73	58	S72 and offset$3	US-PGPUB; USPAT; USOCR; FPRS; EPO; JPO; DERWENT; IBM_TDB	OR	OFF	2018/03/29 22:01
S74	1	14/175811.app.	US-PGPUB; USPAT; USOCR;	OR	OFF	2018/03/29 22:04

			FPRS; EPO; JPO; DERWENT; IBM_TDB			
S75	0	13/914870.app.	US-PGPUB; USPAT; USOCR; FPRS; EPO; JPO; DERWENT; IBM_TDB	OR	OFF	2018/03/29 22:07
S76	188	S71 and (@ad<"20140207")	US-PGPUB; USPAT; USOCR; FPRS; EPO; JPO; DERWENT; IBM_TDB	OR	OFF	2018/03/29 22:11
S77	88	S76 and offset$3	US-PGPUB; USPAT; USOCR; FPRS; EPO; JPO; DERWENT; IBM_TDB	OR	OFF	2018/03/29 22:12
S78	30	S77 not S73	US-PGPUB; USPAT; USOCR; FPRS; EPO; JPO; DERWENT; IBM_TDB	OR	OFF	2018/03/29 22:12
S79	123	((deduc$3 infer$4 detect$4 determin$6) near2 (station$1 source$1 channel$1 album$1)) with based with ((music video$1 media song$1 content$1) near2 (sequenc$3 order$3 offset$4))	US-PGPUB; USPAT; USOCR; FPRS; EPO; JPO; DERWENT; IBM_TDB	OR	OFF	2018/03/29 22:15
S80	73	S79 and (@ad<"20140207")	US-PGPUB; USPAT; USOCR; FPRS; EPO; JPO; DERWENT; IBM_TDB	OR	OFF	2018/03/29 22:16
S81	2	"7986913".pn.	US-PGPUB; USPAT; USOCR; FPRS; EPO; JPO; DERWENT; IBM_TDB	OR	OFF	2018/03/29 22:22
S82	2	"20070143777".pn.	US-PGPUB; USPAT; USOCR; FPRS; EPO; JPO; DERWENT; IBM_TDB	OR	OFF	2018/03/29 22:22
S83	1	14/175811.app.	US-PGPUB;	OR	OFF	2018/03/30

			USPAT; USOCR; FPRS; EPO; JPO; DERWENT; IBM_TDB			08:06
S84	1	S83 and (expos$4)	US-PGPUB; USPAT; USOCR; FPRS; EPO; JPO; DERWENT; IBM_TDB	OR	OFF	2018/03/30 08:06
S85	1	15/025137.app.	US-PGPUB; USPAT; USOCR; FPRS; EPO; JPO; DERWENT; IBM_TDB	OR	OFF	2018/03/30 08:37
S86	1	S85 and (monitor$3 with cloud$1)	US-PGPUB; USPAT; USOCR; FPRS; EPO; JPO; DERWENT; IBM_TDB	OR	OFF	2018/03/30 08:37
S87	0	S85 and (monitor$3 with cloud$1 with sun)	US-PGPUB; USPAT; USOCR; FPRS; EPO; JPO; DERWENT; IBM_TDB	OR	OFF	2018/03/30 08:39
S88	0	"200600592778".pn.	US-PGPUB; USPAT; USOCR; FPRS; EPO; JPO; DERWENT; IBM_TDB	OR	OFF	2018/03/30 09:53
S89	3	"20060059277".pn.	US-PGPUB; USPAT; USOCR; FPRS; EPO; JPO; DERWENT; IBM_TDB	OR	OFF	2018/03/30 09:53
S90	2	11/216543.app.	US-PGPUB; USPAT; USOCR; FPRS; EPO; JPO; DERWENT; IBM_TDB	OR	OFF	2018/03/30 09:53
S91	23	("7444353" | "20080154401" | "7483975" | "20060059277" | "7038619" | "20020072982" | "20050086682" | "20070143777" | "7779415").PN.	US-PGPUB; USPAT; USOCR; FPRS; EPO; JPO; DERWENT;	OR	OFF	2018/10/23 09:11

			IBM_TDB			
S92	26	("20090244402" | "20100031288" | "20110209177" | "20110289536" | "20140059628" | "20150020091" | "20150140896" | "20150312636" | "20170188201" | "7046161").PN.	US-PGPUB; USPAT; USOCR; FPRS; EPO; JPO; DERWENT; IBM_TDB	OR	OFF	2018/10/23 12:44
S93	18	(signal$3 near2 user$1 near2 expos$4).clm.	US-PGPUB; USPAT; USOCR; FPRS; EPO; JPO; DERWENT; IBM_TDB	OR	OFF	2018/10/30 18:31
S94	12	((Jonathan) near2 (Steuer)).INV.	US-PGPUB; USPAT; USOCR	OR	OFF	2018/10/30 18:31
S95	25	((Christopher) near2 (Otto)).INV.	US-PGPUB; USPAT; USOCR	OR	OFF	2018/10/30 18:31
S96	25	S94 S95	US-PGPUB; USPAT; USOCR; FPRS; EPO; JPO; DERWENT; IBM_TDB	OR	OFF	2018/10/30 18:31
S97	2	S93 and S96	US-PGPUB; USPAT; USOCR; FPRS; EPO; JPO; DERWENT; IBM_TDB	OR	OFF	2018/10/30 18:31
S98	17934	(viewer$1 user$1 audience$1) with expos$4 with (media content$1 video$1 music$1 audio song$1)	US-PGPUB; USPAT; USOCR; FPRS; EPO; JPO; DERWENT; IBM_TDB	OR	OFF	2018/10/30 18:31
S99	481	S98 and (detect$4 with (paus$3 rewind$3 skip$4))	US-PGPUB; USPAT; USOCR; FPRS; EPO; JPO; DERWENT; IBM_TDB	OR	OFF	2018/10/30 18:31
S100	43966	(G06Q30/0246 H04L67/22 H04L65/60).cpc.	US-PGPUB; USPAT; USOCR; FPRS; EPO; JPO; DERWENT; IBM_TDB	OR	OFF	2018/10/30 18:31
S101	105	S99 and S100	US-PGPUB; USPAT; USOCR; FPRS;	OR	OFF	2018/10/30 18:31

			EPO; JPO; DERWENT; IBM_TDB			
S102	128	((deduc$3 infer$4 detect$4 determin$6) near2 (station$1 source$1 channel$1 album$1)) with based with ((music video$1 media song$1 content$1) near2 (sequenc$3 order$3 offset$4))	US-PGPUB; USPAT; USOCR; FPRS; EPO; JPO; DERWENT; IBM_TDB	OR	OFF	2018/10/30 18:31
S103	74	S102 and (@ad<"20140207")	US-PGPUB; USPAT; USOCR; FPRS; EPO; JPO; DERWENT; IBM_TDB	OR	OFF	2018/10/30 18:31
S104	105	S99 and S100	US-PGPUB; USPAT; USOCR; FPRS; EPO; JPO; DERWENT; IBM_TDB	OR	OFF	2018/10/30 18:31
S105	0	(content near offset$1) and (expos$3 near3 tim$3 near3 ((another other different) near3 broadcast$3))	US-PGPUB; USPAT; USOCR; FPRS; EPO; JPO; DERWENT; IBM_TDB	OR	OFF	2018/10/30 18:33
S106	0	S96 and (expos$3 near3 tim$3 near3 ((another other different) near3 broadcast$3))	US-PGPUB; USPAT; USOCR; FPRS; EPO; JPO; DERWENT; IBM_TDB	OR	OFF	2018/10/30 18:33
S107	0	(expos$3 near3 tim$3 near3 ((another other different) near3 broadcast$3))	US-PGPUB; USPAT; USOCR; FPRS; EPO; JPO; DERWENT; IBM_TDB	OR	OFF	2018/10/30 18:34
S108	1870	((expos$3 view$3 watch$3) with tim$3 with ((another other different) with broadcast$3))	US-PGPUB; USPAT; USOCR; FPRS; EPO; JPO; DERWENT; IBM_TDB	OR	OFF	2018/10/30 18:34
S109	0	S96 and S108	US-PGPUB; USPAT; USOCR; FPRS; EPO; JPO; DERWENT; IBM_TDB	OR	OFF	2018/10/30 18:35
S110	0	h04n/21.$6.cpc.	US-PGPUB; USPAT;	OR	OFF	2018/10/30 18:35

			USOCR; FPRS; EPO; JPO; DERWENT; IBM_TDB			
S111	416627	h04n21/$6.cpc.	US-PGPUB; USPAT; USOCR; FPRS; EPO; JPO; DERWENT; IBM_TDB	OR	OFF	2018/10/30 18:35
S112	69510	"725".clas.	US-PGPUB; USPAT; USOCR; FPRS; EPO; JPO; DERWENT; IBM_TDB	OR	OFF	2018/10/30 18:36
S113	470202	S111 S112 S100	US-PGPUB; USPAT; USOCR; FPRS; EPO; JPO; DERWENT; IBM_TDB	OR	OFF	2018/10/30 18:36
S114	471036	S108 anbd S113	US-PGPUB; USPAT; USOCR; FPRS; EPO; JPO; DERWENT; IBM_TDB	OR	OFF	2018/10/30 18:36
S115	1312	S108 and S113	US-PGPUB; USPAT; USOCR; FPRS; EPO; JPO; DERWENT; IBM_TDB	OR	OFF	2018/10/30 18:36
S116	0	S115 and (tim$3 near3 position$1 near3 within near (media content$1 video$1 program$4))	US-PGPUB; USPAT; USOCR; FPRS; EPO; JPO; DERWENT; IBM_TDB	OR	OFF	2018/10/30 18:37
S117	1	S115 and (tim$3 near3 position$1 near3 within near3 (media content$1 video$1 program$4))	US-PGPUB; USPAT; USOCR; FPRS; EPO; JPO; DERWENT; IBM_TDB	OR	OFF	2018/10/30 18:37

EAST Search History (Interference)

< This search history is empty>

9/3/2019 11:41:53 AM
C:\Users\csmith3\Documents\EAST\Workspaces\Steuer 811 RCE.wsp

Bibliographic Data

Application No: 16/403,204

Foreign Priority claimed: ○ Yes ◉ No

35 USC 119 (a-d) conditions met: ☐ Yes ☑ No ☐ Met After Allowance

Verified and Acknowledged: /CHENEA DAVIS/ (Examiner's Signature) | (Initials)

Title: MEDIA USAGE MONITORING AND MEASUREMENT SYSTEM AND METHOD

FILING or 371(c) DATE	CLASS	GROUP ART UNIT	ATTORNEY DOCKET NO.
05/03/2019 **RULE**	705	2421	10004-2000116

APPLICANTS

Anonymous Media Research, LLC, New York, NY, UNITED STATES

INVENTORS

Jonathan S. Steuer New York, NY, UNITED STATES

Christopher W. Otto San Francisco, CA, UNITED STATES

CONTINUING DATA

This application is a DIV of 14175811 02/07/2014ABN

14175811 is a CON of 13914870 06/11/2013ABN

13914870 is a CON of 12954604 11/24/2010ABN

12954604 is a DIV of 11139330 05/26/2005ABN

11139330 has PRO of 60574836 05/27/2004

FOREIGN APPLICATIONS

IF REQUIRED, FOREIGN LICENSE GRANTED**

05/15/2019

**** SMALL ENTITY ****

STATE OR COUNTRY

UNITED STATES

ADDRESS

Mauriel Kapouytian Woods LLP
15 W. 26th Street
7th Floor
New York, NY 10010
UNITED STATES

FILING FEE RECEIVED

$785

Doc code: IDS
Doc description: Information Disclosure Statement (IDS) Filed

PTO/SB/08a (02-18)
Approved for use through 11/30/2020. OMB 0651-0031
U.S. Patent and Trademark Office; U.S. DEPARTMENT OF COMMERCE
Under the Paperwork Reduction Act of 1995, no persons are required to respond to a collection of information unless it contains a valid OMB control number.

INFORMATION DISCLOSURE STATEMENT BY APPLICANT (Not for submission under 37 CFR 1.99)		
	Application Number	16403204
	Filing Date	2019-05-03
	First Named Inventor	Jonathan S. Steuer
	Art Unit	2421
	Examiner Name	Davis, Chenea
	Attorney Docket Number	10004-2000116

U.S.PATENTS Remove

Examiner Initial*	Cite No	Patent Number	Kind Code[1]	Issue Date	Name of Patentee or Applicant of cited Document	Pages,Columns,Lines where Relevant Passages or Relevant Figures Appear
	1	8677389	B2	2014-03-18	Steuer et al.	
	2	8510768	B2	2013-08-13	Steuer et al.	
	3	8756622	B2	2014-06-17	Steuer et al.	
	4	8296791	B2	2012-10-23	Steuer et al.	
	5	6990453	B2	2006-01-24	Wang et al.	
	6	4697209		1987-09-29	Kiewit et al.	
	7	4677466		1987-06-30	Lert, Jr. et al.	
	8	5594934	A	1997-01-14	Lu et al.	

ALL REFERENCES CONSIDERED EXCEPT WHERE LINED THROUGH. /C.D./

INFORMATION DISCLOSURE STATEMENT BY APPLICANT (Not for submission under 37 CFR 1.99)		
	Application Number	16403204
	Filing Date	2019-05-03
	First Named Inventor	Jonathan S. Steuer
	Art Unit	2421
	Examiner Name	Davis, Chenea
	Attorney Docket Number	10004-2000116

	9	6513161	B2	2003-01-28	Wheeler et al.	
	10	3919479		1975-11-11	Moon et al.	
	11	5945988	A	1999-08-31	Williams et al.	
	12	5095382	A	1992-03-10	Kensasku Abe	
	13	5512933	A	1996-04-30	Wheatley et al.	
	14	7483975	B2	2009-01-27	Kolessar et al.	
	15	5437050	A	1995-07-25	Lamb et al.	
	16	5758257	A	1998-05-26	Herz et al.	
	17	7444353	B1	2008-10-28	Chen et al.	
	18	7779415	B2	2010-08-17	Bisdikian et al.	
	19	7038619	B2	2006-05-02	Percy et al.	

ALL REFERENCES CONSIDERED EXCEPT WHERE LINED THROUGH. /C.D./

INFORMATION DISCLOSURE STATEMENT BY APPLICANT (Not for submission under 37 CFR 1.99)		
	Application Number	16403204
	Filing Date	2019-05-03
	First Named Inventor	Jonathan S. Steuer
	Art Unit	2421
	Examiner Name	Davis, Chenea
	Attorney Docket Number	10004-2000116

	20	5436653	A	1995-07-25	Ellis et al.	
	21	8131389	B1	2012-03-06	Hardwick et al.	
	22	5210366	A	1993-05-11	Sykes, Jr.	
	23	7634787	B1	2009-12-15	Gebhardt et al.	
	24	5404161	A	1995-04-04	Douglass et al.	
	25	5844938	A	1998-12-01	Hupp et al.	

If you wish to add additional U.S. Patent citation information please click the Add button. Add

U.S.PATENT APPLICATION PUBLICATIONS Remove

Examiner Initial*	Cite No	Publication Number	Kind Code[1]	Publication Date	Name of Patentee or Applicant of cited Document	Pages,Columns,Lines where Relevant Passages or Relevant Figures Appear
	1	20020161741	A1	2002-10-31	Wang et al.	
	2	20040122679	A1	2004-06-24	Neuhauser et al.	
	3	20020059577	A1	2002-05-16	Lu et al.	

ALL REFERENCES CONSIDERED EXCEPT WHERE LINED THROUGH. /C.D./

INFORMATION DISCLOSURE STATEMENT BY APPLICANT (Not for submission under 37 CFR 1.99)		
	Application Number	16403204
	Filing Date	2019-05-03
	First Named Inventor	Jonathan S. Steuer
	Art Unit	2421
	Examiner Name	Davis, Chenea
	Attorney Docket Number	10004-2000116

	4	20020072982	A1	2002-06-13	Barton et al.	
	5	20060059277	A1	2006-03-16	Zito et al.	
	6	20020010919	A1	2002-01-24	Lu et al.	
	7	20020038456	A1	2002-03-28	Hansen et al.	
	8	20020083060	A1	2002-06-27	Wang et al.	
	9	20040224638	A1	2004-11-11	Fadell et al.	
	10	20030009469	A1	2003-01-09	Platt et al.	
	11	20040001161	A1	2004-01-01	Herley	
	12	20050086682	A1	2005-04-21	Burges et al.	
	13	20070143777	A1	2007-06-21	Wang	
	14	20040048637	A1	2004-03-11	Atkinson	

ALL REFERENCES CONSIDERED EXCEPT WHERE LINED THROUGH. /C.D./

INFORMATION DISCLOSURE STATEMENT BY APPLICANT (Not for submission under 37 CFR 1.99)		
	Application Number	16403204
	Filing Date	2019-05-03
	First Named Inventor	Jonathan S. Steuer
	Art Unit	2421
	Examiner Name	Davis, Chenea
	Attorney Docket Number	10004-2000116

	15	20080154401	A1	2008-06-26	Wang	
	16	20040055445	A1	2004-03-25	Iyoku et al.	
	17	20030135623	A1	2003-07-17	Schrempp et al.	
	18	20040034441	A1	2004-02-19	Eaton et al.	
	19	20030177488	A1	2003-09-18	Smith et al.	

If you wish to add additional U.S. Published Application citation information please click the Add button. Add

FOREIGN PATENT DOCUMENTS Remove

Examiner Initial*	Cite No	Foreign Document Number[3]	Country Code[2]	Kind Code[4]	Publication Date	Name of Patentee or Applicant of cited Document	Pages,Columns,Lines where Relevant Passages or Relevant Figures Appear	T[5]
	1	2004040475	WO	A2	2004-05-13	Haitsma		
	2	03091990	WO	A1	2003-11-06	Wang et al.		
	3	0227600	WO	A2	2002-04-04	Wang et al.		
	4	2005006768	WO	A1	2005-01-20	Lee et al.		

ALL REFERENCES CONSIDERED EXCEPT WHERE LINED THROUGH. /C.D./

INFORMATION DISCLOSURE STATEMENT BY APPLICANT (Not for submission under 37 CFR 1.99)		
	Application Number	16403204
	Filing Date	2019-05-03
	First Named Inventor	Jonathan S. Steuer
	Art Unit	2421
	Examiner Name	Davis, Chenea
	Attorney Docket Number	10004-2000116

	5	2005036877	WO	A1	2005-04-21	Deng		
	6	2004030341	WO	A1	2004-04-08	Haitsma		
	7	2004044820	WO	A1	2004-05-27	Seo et al.		
	8	2004077430	WO	A1	2004-09-10	Haitsma et al.		

If you wish to add additional Foreign Patent Document citation information please click the Add button Add

NON-PATENT LITERATURE DOCUMENTS Remove

Examiner Initials*	Cite No	Include name of the author (in CAPITAL LETTERS), title of the article (when appropriate), title of the item (book, magazine, journal, serial, symposium, catalog, etc), date, pages(s), volume-issue number(s), publisher, city and/or country where published.	T[5]
	1	PINTO, "Mediawatch meters a complex mix of media, passively," Indiantelevision.com, www.inidiantelevision.com/headlines/y2k5/feb/feb117.htm, February 19, 2005, 5 pages.	
	2	HEDGES, "New measurement devices raise new questions. Will we ever know who's listening?" ftm, www.follwthemedia.com/number/devices01082004.htm, August 1, 2004, 5 pages	
	3	NIELSEN MEDIA RESEARCH, "Summary Report of the Active/Passive (A/P) Meter Regional Test," November 11, 2002, 26 pages	
	4	GERTNER, "Our Ratings, Ourselves," Watching What You Watch, The New York Times Magazine, April 10, 2005, 17 pages	
	5	ARBITRON, "The Portable People Meter System," Portable People Meter, www.arbitron.com/protable_people_meters/ppm_system.htm, 2004, 4 pages	

ALL REFERENCES CONSIDERED EXCEPT WHERE LINED THROUGH. /C.D./

INFORMATION DISCLOSURE STATEMENT BY APPLICANT (Not for submission under 37 CFR 1.99)		
	Application Number	16403204
	Filing Date	2019-05-03
	First Named Inventor	Jonathan S. Steuer
	Art Unit	2421
	Examiner Name	Davis, Chenea
	Attorney Docket Number	10004-2000116

	6	NIELSEN MEDIA RESEARCH, "Active/Passive Metering begins July 2004," Client Communications, August 6, 2003, 3 pages	
	7	PHILIPS, "Audio Fingerprinting for automatic music recognition," Philips Research brochure, www.researchphilips.com, 2 pages	
	8	SCHONEBERG, Gfk AG, "Gfk unveils its multi-talented new MediaWatch," Press info, June 14, 2004, 2 pages	
	9	International Search Report and Written Opinion, International Application No. PCT/US05/18934, mailed October 26, 2006, 14 pages	
	10	European Search Report, European Application No. 05755114.5, dated October 8, 2013, 3 pages.	

If you wish to add additional non-patent literature document citation information please click the Add button Add

EXAMINER SIGNATURE

Examiner Signature	/CHENEA DAVIS/	Date Considered	09/03/2019

*EXAMINER: Initial if reference considered, whether or not citation is in conformance with MPEP 609. Draw line through a citation if not in conformance and not considered. Include copy of this form with next communication to applicant.

[1] See Kind Codes of USPTO Patent Documents at www.USPTO.GOV or MPEP 901.04. [2] Enter office that issued the document, by the two-letter code (WIPO Standard ST.3). [3] For Japanese patent documents, the indication of the year of the reign of the Emperor must precede the serial number of the patent document. [4] Kind of document by the appropriate symbols as indicated on the document under WIPO Standard ST.16 if possible. [5] Applicant is to place a check mark here if English language translation is attached.

ALL REFERENCES CONSIDERED EXCEPT WHERE LINED THROUGH. /C.D./

INFORMATION DISCLOSURE STATEMENT BY APPLICANT (Not for submission under 37 CFR 1.99)		
	Application Number	16403204
	Filing Date	2019-05-03
	First Named Inventor	Jonathan S. Steuer
	Art Unit	2421
	Examiner Name	Davis, Chenea
	Attorney Docket Number	10004-2000116

CERTIFICATION STATEMENT

Please see 37 CFR 1.97 and 1.98 to make the appropriate selection(s):

That each item of information contained in the information disclosure statement was first cited in any communication from a foreign patent office in a counterpart foreign application not more than three months prior to the filing of the information disclosure statement. See 37 CFR 1.97(e)(1).

OR

☐ That no item of information contained in the information disclosure statement was cited in a communication from a foreign patent office in a counterpart foreign application, and, to the knowledge of the person signing the certification after making reasonable inquiry, no item of information contained in the information disclosure statement was known to any individual designated in 37 CFR 1.56(c) more than three months prior to the filing of the information disclosure statement. See 37 CFR 1.97(e)(2).

See attached certification statement.

The fee set forth in 37 CFR 1.17 (p) has been submitted herewith.

X A certification statement is not submitted herewith.

SIGNATURE

A signature of the applicant or representative is required in accordance with CFR 1.33, 10.18. Please see CFR 1.4(d) for the form of the signature.

Signature	/Michael Mauriel/	Date (YYYY-MM-DD)	2019-08-12
Name/Print	Michael Mauriel	Registration Number	44,226

This collection of information is required by 37 CFR 1.97 and 1.98. The information is required to obtain or retain a benefit by the public which is to file (and by the USPTO to process) an application. Confidentiality is governed by 35 U.S.C. 122 and 37 CFR 1.14. This collection is estimated to take 1 hour to complete, including gathering, preparing and submitting the completed application form to the USPTO. Time will vary depending upon the individual case. Any comments on the amount of time you require to complete this form and/or suggestions for reducing this burden, should be sent to the Chief Information Officer, U.S. Patent and Trademark Office, U.S. Department of Commerce, P.O. Box 1450, Alexandria, VA 22313-1450. DO NOT SEND FEES OR COMPLETED FORMS TO THIS ADDRESS. **SEND TO: Commissioner for Patents, P.O. Box 1450, Alexandria, VA 22313-1450.**

ALL REFERENCES CONSIDERED EXCEPT WHERE LINED THROUGH. /C.D./

Privacy Act Statement

The Privacy Act of 1974 (P.L. 93-579) requires that you be given certain information in connection with your submission of the attached form related to a patent application or patent. Accordingly, pursuant to the requirements of the Act, please be advised that: (1) the general authority for the collection of this information is 35 U.S.C. 2(b)(2); (2) furnishing of the information solicited is voluntary; and (3) the principal purpose for which the information is used by the U.S. Patent and Trademark Office is to process and/or examine your submission related to a patent application or patent. If you do not furnish the requested information, the U.S. Patent and Trademark Office may not be able to process and/or examine your submission, which may result in termination of proceedings or abandonment of the application or expiration of the patent.

The information provided by you in this form will be subject to the following routine uses:

1. The information on this form will be treated confidentially to the extent allowed under the Freedom of Information Act (5 U.S.C. 552) and the Privacy Act (5 U.S.C. 552a). Records from this system of records may be disclosed to the Department of Justice to determine whether the Freedom of Information Act requires disclosure of these record s.

2. A record from this system of records may be disclosed, as a routine use, in the course of presenting evidence to a court, magistrate, or administrative tribunal, including disclosures to opposing counsel in the course of settlement negotiations.

3. A record in this system of records may be disclosed, as a routine use, to a Member of Congress submitting a request involving an individual, to whom the record pertains, when the individual has requested assistance from the Member with respect to the subject matter of the record.

4. A record in this system of records may be disclosed, as a routine use, to a contractor of the Agency having need for the information in order to perform a contract. Recipients of information shall be required to comply with the requirements of the Privacy Act of 1974, as amended, pursuant to 5 U.S.C. 552a(m).

5. A record related to an International Application filed under the Patent Cooperation Treaty in this system of records may be disclosed, as a routine use, to the International Bureau of the World Intellectual Property Organization, pursuant to the Patent Cooperation Treaty.

6. A record in this system of records may be disclosed, as a routine use, to another federal agency for purposes of National Security review (35 U.S.C. 181) and for review pursuant to the Atomic Energy Act (42 U.S.C. 218(c)).

7. A record from this system of records may be disclosed, as a routine use, to the Administrator, General Services, or his/her designee, during an inspection of records conducted by GSA as part of that agency's responsibility to recommend improvements in records management practices and programs, under authority of 44 U.S.C. 2904 and 2906. Such disclosure shall be made in accordance with the GSA regulations governing inspection of records for this purpose, and any other relevant (i.e., GSA or Commerce) directive. Such disclosure shall not be used to make determinations about individuals.

8. A record from this system of records may be disclosed, as a routine use, to the public after either publication of the application pursuant to 35 U.S.C. 122(b) or issuance of a patent pursuant to 35 U.S.C. 151. Further, a record may be disclosed, subject to the limitations of 37 CFR 1.14, as a routine use, to the public if the record was filed in an application which became abandoned or in which the proceedings were terminated and which application is referenced by either a published application, an application open to public inspections or an issued patent.

9. A record from this system of records may be disclosed, as a routine use, to a Federal, State, or local law enforcement agency, if the USPTO becomes aware of a violation or potential violation of law or regulation.

ALL REFERENCES CONSIDERED EXCEPT WHERE LINED THROUGH. /C.D./

UNITED STATES PATENT AND TRADEMARK OFFICE

UNITED STATES DEPARTMENT OF COMMERCE
United States Patent and Trademark Office
Address: COMMISSIONER FOR PATENTS
P.O. Box 1450
Alexandria, Virginia 22313-1450
www.uspto.gov

APPLICATION NUMBER	FILING OR 371(C) DATE	FIRST NAMED APPLICANT	ATTY. DOCKET NO./TITLE
16/403,204	05/03/2019	Jonathan S. Steuer	10004-2000116

CONFIRMATION NO. 1048

PUBLICATION NOTICE

OC000000110598774

51417
Mauriel Kapouytian Woods LLP
15 W. 26th Street
7th Floor
New York, NY 10010

Title:MEDIA USAGE MONITORING AND MEASUREMENT SYSTEM AND METHOD

Publication No.US-2019-0259056-A1
Publication Date:08/22/2019

NOTICE OF PUBLICATION OF APPLICATION

The above-identified application will be electronically published as a patent application publication pursuant to 37 CFR 1.211, et seq. The patent application publication number and publication date are set forth above.

The publication may be accessed through the USPTO's publically available Searchable Databases via the Internet at www.uspto.gov. The direct link to access the publication is currently http://www.uspto.gov/patft/.

The publication process established by the Office does not provide for mailing a copy of the publication to applicant. A copy of the publication may be obtained from the Office upon payment of the appropriate fee set forth in 37 CFR 1.19(a)(1). Orders for copies of patent application publications are handled by the USPTO's Public Records Division. The Public Records Division can be reached by telephone at (571) 272-3150 or (800) 972-6382, by facsimile at (571) 273-3250, by mail addressed to the United States Patent and Trademark Office, Public Records Division, Alexandria, VA 22313-1450 or via the Internet.

In addition, information on the status of the application, including the mailing date of Office actions and the dates of receipt of correspondence filed in the Office, may also be accessed via the Internet through the Patent Electronic Business Center at www.uspto.gov using the public side of the Patent Application Information and Retrieval (PAIR) system. The direct link to access this status information is currently https://portal.uspto.gov/pair/PublicPair. Prior to publication, such status information is confidential and may only be obtained by applicant using the private side of PAIR.

Further assistance in electronically accessing the publication, or about PAIR, is available by calling the Patent Electronic Business Center at 1-866-217-9197.

Office of Data Managment, Application Assistance Unit (571) 272-4000, or (571) 272-4200, or 1-888-786-0101

PTO/SB/08a (02-18)
Approved for use through 11/30/2020. OMB 0651-0031
U.S. Patent and Trademark Office; U.S. DEPARTMENT OF COMMERCE
Under the Paperwork Reduction Act of 1995, no persons are required to respond to a collection of information unless it contains a valid OMB control number.

INFORMATION DISCLOSURE STATEMENT BY APPLICANT

(Not for submission under 37 CFR 1.99)

Application Number	16403204
Filing Date	2019-05-03
First Named Inventor	Jonathan S. Steuer
Art Unit	2421
Examiner Name	Davis, Chenea
Attorney Docket Number	10004-2000116

U.S.PATENTS Remove

Examiner Initial*	Cite No	Patent Number	Kind Code[1]	Issue Date	Name of Patentee or Applicant of cited Document	Pages,Columns,Lines where Relevant Passages or Relevant Figures Appear
	1	8677389	B2	2014-03-18	Steuer et al.	
	2	8510768	B2	2013-08-13	Steuer et al.	
	3	8756622	B2	2014-06-17	Steuer et al.	
	4	8296791	B2	2012-10-23	Steuer et al.	
	5	6990453	B2	2006-01-24	Wang et al.	
	6	4697209		1987-09-29	Kiewit et al.	
	7	4677466		1987-06-30	Lert, Jr. et al.	
	8	5594934	A	1997-01-14	Lu et al.	

INFORMATION DISCLOSURE STATEMENT BY APPLICANT (Not for submission under 37 CFR 1.99)	Application Number	16403204
	Filing Date	2019-05-03
	First Named Inventor	Jonathan S. Steuer
	Art Unit	2421
	Examiner Name	Davis, Chenea
	Attorney Docket Number	10004-2000116

	9	6513161	B2	2003-01-28	Wheeler et al.	
	10	3919479		1975-11-11	Moon et al.	
	11	5945988	A	1999-08-31	Williams et al.	
	12	5095382	A	1992-03-10	Kensasku Abe	
	13	5512933	A	1996-04-30	Wheatley et al.	
	14	7483975	B2	2009-01-27	Kolessar et al.	
	15	5437050	A	1995-07-25	Lamb et al.	
	16	5758257	A	1998-05-26	Herz et al.	
	17	7444353	B1	2008-10-28	Chen et al.	
	18	7779415	B2	2010-08-17	Bisdikian et al.	
	19	7038619	B2	2006-05-02	Percy et al.	

INFORMATION DISCLOSURE STATEMENT BY APPLICANT (Not for submission under 37 CFR 1.99)	Application Number	16403204
	Filing Date	2019-05-03
	First Named Inventor	Jonathan S. Steuer
	Art Unit	2421
	Examiner Name	Davis, Chenea
	Attorney Docket Number	10004-2000116

	20	5436653	A	1995-07-25	Ellis et al.	
	21	8131389	B1	2012-03-06	Hardwick et al.	
	22	5210366	A	1993-05-11	Sykes, Jr.	
	23	7634787	B1	2009-12-15	Gebhardt et al.	
	24	5404161	A	1995-04-04	Douglass et al.	
	25	5844938	A	1998-12-01	Hupp et al.	

If you wish to add additional U.S. Patent citation information please click the Add button. Add

U.S.PATENT APPLICATION PUBLICATIONS Remove

Examiner Initial*	Cite No	Publication Number	Kind Code[1]	Publication Date	Name of Patentee or Applicant of cited Document	Pages,Columns,Lines where Relevant Passages or Relevant Figures Appear
	1	20020161741	A1	2002-10-31	Wang et al.	
	2	20040122679	A1	2004-06-24	Neuhauser et al.	
	3	20020059577	A1	2002-05-16	Lu et al.	

INFORMATION DISCLOSURE STATEMENT BY APPLICANT (Not for submission under 37 CFR 1.99)	Application Number	16403204
	Filing Date	2019-05-03
	First Named Inventor	Jonathan S. Steuer
	Art Unit	2421
	Examiner Name	Davis, Chenea
	Attorney Docket Number	10004-2000116

	4	20020072982	A1	2002-06-13	Barton et al.	
	5	20060059277	A1	2006-03-16	Zito et al.	
	6	20020010919	A1	2002-01-24	Lu et al.	
	7	20020038456	A1	2002-03-28	Hansen et al.	
	8	20020083060	A1	2002-06-27	Wang et al.	
	9	20040224638	A1	2004-11-11	Fadell et al.	
	10	20030009469	A1	2003-01-09	Platt et al.	
	11	20040001161	A1	2004-01-01	Herley	
	12	20050086682	A1	2005-04-21	Burges et al.	
	13	20070143777	A1	2007-06-21	Wang	
	14	20040048637	A1	2004-03-11	Atkinson	

INFORMATION DISCLOSURE STATEMENT BY APPLICANT (Not for submission under 37 CFR 1.99)	Application Number	16403204
	Filing Date	2019-05-03
	First Named Inventor	Jonathan S. Steuer
	Art Unit	2421
	Examiner Name	Davis, Chenea
	Attorney Docket Number	10004-2000116

	15	20080154401	A1	2008-06-26	Wang	
	16	20040055445	A1	2004-03-25	Iyoku et al.	
	17	20030135623	A1	2003-07-17	Schrempp et al.	
	18	20040034441	A1	2004-02-19	Eaton et al.	
	19	20030177488	A1	2003-09-18	Smith et al.	

If you wish to add additional U.S. Published Application citation information please click the Add button. Add

FOREIGN PATENT DOCUMENTS Remove

Examiner Initial*	Cite No	Foreign Document Number[3]	Country Code[2] i	Kind Code[4]	Publication Date	Name of Patentee or Applicant of cited Document	Pages,Columns,Lines where Relevant Passages or Relevant Figures Appear	T[5]
	1	2004040475	WO	A2	2004-05-13	Haitsma		
	2	03091990	WO	A1	2003-11-06	Wang et al.		
	3	0227600	WO	A2	2002-04-04	Wang et al.		
	4	2005006768	WO	A1	2005-01-20	Lee et al.		

INFORMATION DISCLOSURE STATEMENT BY APPLICANT (Not for submission under 37 CFR 1.99)	Application Number	16403204
	Filing Date	2019-05-03
	First Named Inventor	Jonathan S. Steuer
	Art Unit	2421
	Examiner Name	Davis, Chenea
	Attorney Docket Number	10004-2000116

	5	2005036877	WO	A1	2005-04-21	Deng		
	6	2004030341	WO	A1	2004-04-08	Haitsma		
	7	2004044820	WO	A1	2004-05-27	Seo et al.		
	8	2004077430	WO	A1	2004-09-10	Haitsma et al.		

If you wish to add additional Foreign Patent Document citation information please click the Add button Add

NON-PATENT LITERATURE DOCUMENTS Remove

Examiner Initials*	Cite No	Include name of the author (in CAPITAL LETTERS), title of the article (when appropriate), title of the item (book, magazine, journal, serial, symposium, catalog, etc), date, pages(s), volume-issue number(s), publisher, city and/or country where published.	T[5]
	1	PINTO, "Mediawatch meters a complex mix of media, passively," Indiantelevision.com, www.inidiantelevision.com/headlines/y2k5/feb/feb117.htm, February 19, 2005, 5 pages.	
	2	HEDGES, "New measurement devices raise new questions. Will we ever know who's listening?" ftm, www.follwthemedia.com/number/devices01082004.htm, August 1, 2004, 5 pages	
	3	NIELSEN MEDIA RESEARCH, "Summary Report of the Active/Passive (A/P) Meter Regional Test," November 11, 2002, 26 pages	
	4	GERTNER, "Our Ratings, Ourselves," Watching What You Watch, The New York Times Magazine, April 10, 2005, 17 pages	
	5	ARBITRON, "The Portable People Meter System," Portable People Meter, www.arbitron.com/protable_people_meters/ppm_system.htm, 2004, 4 pages	

INFORMATION DISCLOSURE STATEMENT BY APPLICANT (Not for submission under 37 CFR 1.99)	Application Number	16403204
	Filing Date	2019-05-03
	First Named Inventor	Jonathan S. Steuer
	Art Unit	2421
	Examiner Name	Davis, Chenea
	Attorney Docket Number	10004-2000116

	6	NIELSEN MEDIA RESEARCH, "Active/Passive Metering begins July 2004," Client Communications, August 6, 2003, 3 pages	
	7	PHILIPS, "Audio Fingerprinting for automatic music recognition," Philips Research brochure, www.researchphilips.com, 2 pages	
	8	SCHONEBERG, Gfk AG, "Gfk unveils its multi-talented new MediaWatch," Press info, June 14, 2004, 2 pages	
	9	International Search Report and Written Opinion, International Application No. PCT/US05/18934, mailed October 26, 2006, 14 pages	
	10	European Search Report, European Application No. 05755114.5, dated October 8, 2013, 3 pages.	

If you wish to add additional non-patent literature document citation information please click the Add button Add

EXAMINER SIGNATURE

Examiner Signature		Date Considered	

*EXAMINER: Initial if reference considered, whether or not citation is in conformance with MPEP 609. Draw line through a citation if not in conformance and not considered. Include copy of this form with next communication to applicant.

[1] See Kind Codes of USPTO Patent Documents at www.USPTO.GOV or MPEP 901.04. [2] Enter office that issued the document, by the two-letter code (WIPO Standard ST.3). [3] For Japanese patent documents, the indication of the year of the reign of the Emperor must precede the serial number of the patent document. [4] Kind of document by the appropriate symbols as indicated on the document under WIPO Standard ST.16 if possible. [5] Applicant is to place a check mark here if English language translation is attached.

INFORMATION DISCLOSURE STATEMENT BY APPLICANT (Not for submission under 37 CFR 1.99)	Application Number	16403204
	Filing Date	2019-05-03
	First Named Inventor	Jonathan S. Steuer
	Art Unit	2421
	Examiner Name	Davis, Chenea
	Attorney Docket Number	10004-2000116

CERTIFICATION STATEMENT

Please see 37 CFR 1.97 and 1.98 to make the appropriate selection(s):

That each item of information contained in the information disclosure statement was first cited in any communication from a foreign patent office in a counterpart foreign application not more than three months prior to the filing of the information disclosure statement. See 37 CFR 1.97(e)(1).

OR

☐ That no item of information contained in the information disclosure statement was cited in a communication from a foreign patent office in a counterpart foreign application, and, to the knowledge of the person signing the certification after making reasonable inquiry, no item of information contained in the information disclosure statement was known to any individual designated in 37 CFR 1.56(c) more than three months prior to the filing of the information disclosure statement. See 37 CFR 1.97(e)(2).

See attached certification statement.

The fee set forth in 37 CFR 1.17 (p) has been submitted herewith.

☒ A certification statement is not submitted herewith.

SIGNATURE

A signature of the applicant or representative is required in accordance with CFR 1.33, 10.18. Please see CFR 1.4(d) for the form of the signature.

Signature	/Michael Mauriel/	Date (YYYY-MM-DD)	2019-08-12
Name/Print	Michael Mauriel	Registration Number	44,226

This collection of information is required by 37 CFR 1.97 and 1.98. The information is required to obtain or retain a benefit by the public which is to file (and by the USPTO to process) an application. Confidentiality is governed by 35 U.S.C. 122 and 37 CFR 1.14. This collection is estimated to take 1 hour to complete, including gathering, preparing and submitting the completed application form to the USPTO. Time will vary depending upon the individual case. Any comments on the amount of time you require to complete this form and/or suggestions for reducing this burden, should be sent to the Chief Information Officer, U.S. Patent and Trademark Office, U.S. Department of Commerce, P.O. Box 1450, Alexandria, VA 22313-1450. DO NOT SEND FEES OR COMPLETED FORMS TO THIS ADDRESS. **SEND TO: Commissioner for Patents, P.O. Box 1450, Alexandria, VA 22313-1450.**

Privacy Act Statement

The Privacy Act of 1974 (P.L. 93-579) requires that you be given certain information in connection with your submission of the attached form related to a patent application or patent. Accordingly, pursuant to the requirements of the Act, please be advised that: (1) the general authority for the collection of this information is 35 U.S.C. 2(b)(2); (2) furnishing of the information solicited is voluntary; and (3) the principal purpose for which the information is used by the U.S. Patent and Trademark Office is to process and/or examine your submission related to a patent application or patent. If you do not furnish the requested information, the U.S. Patent and Trademark Office may not be able to process and/or examine your submission, which may result in termination of proceedings or abandonment of the application or expiration of the patent.

The information provided by you in this form will be subject to the following routine uses:

1. The information on this form will be treated confidentially to the extent allowed under the Freedom of Information Act (5 U.S.C. 552) and the Privacy Act (5 U.S.C. 552a). Records from this system of records may be disclosed to the Department of Justice to determine whether the Freedom of Information Act requires disclosure of these record s.

2. A record from this system of records may be disclosed, as a routine use, in the course of presenting evidence to a court, magistrate, or administrative tribunal, including disclosures to opposing counsel in the course of settlement negotiations.

3. A record in this system of records may be disclosed, as a routine use, to a Member of Congress submitting a request involving an individual, to whom the record pertains, when the individual has requested assistance from the Member with respect to the subject matter of the record.

4. A record in this system of records may be disclosed, as a routine use, to a contractor of the Agency having need for the information in order to perform a contract. Recipients of information shall be required to comply with the requirements of the Privacy Act of 1974, as amended, pursuant to 5 U.S.C. 552a(m).

5. A record related to an International Application filed under the Patent Cooperation Treaty in this system of records may be disclosed, as a routine use, to the International Bureau of the World Intellectual Property Organization, pursuant to the Patent Cooperation Treaty.

6. A record in this system of records may be disclosed, as a routine use, to another federal agency for purposes of National Security review (35 U.S.C. 181) and for review pursuant to the Atomic Energy Act (42 U.S.C. 218(c)).

7. A record from this system of records may be disclosed, as a routine use, to the Administrator, General Services, or his/her designee, during an inspection of records conducted by GSA as part of that agency's responsibility to recommend improvements in records management practices and programs, under authority of 44 U.S.C. 2904 and 2906. Such disclosure shall be made in accordance with the GSA regulations governing inspection of records for this purpose, and any other relevant (i.e., GSA or Commerce) directive. Such disclosure shall not be used to make determinations about individuals.

8. A record from this system of records may be disclosed, as a routine use, to the public after either publication of the application pursuant to 35 U.S.C. 122(b) or issuance of a patent pursuant to 35 U.S.C. 151. Further, a record may be disclosed, subject to the limitations of 37 CFR 1.14, as a routine use, to the public if the record was filed in an application which became abandoned or in which the proceedings were terminated and which application is referenced by either a published application, an application open to public inspections or an issued patent.

9. A record from this system of records may be disclosed, as a routine use, to a Federal, State, or local law enforcement agency, if the USPTO becomes aware of a violation or potential violation of law or regulation.

Electronic Acknowledgement Receipt

EFS ID:	36852939
Application Number:	16403204
International Application Number:	
Confirmation Number:	1048
Title of Invention:	MEDIA USAGE MONITORING AND MEASUREMENT SYSTEM AND METHOD
First Named Inventor/Applicant Name:	Jonathan S. Steuer
Customer Number:	51417
Filer:	Michael John Mauriel/Emily Sullenberger
Filer Authorized By:	Michael John Mauriel
Attorney Docket Number:	10004-2000116
Receipt Date:	12-AUG-2019
Filing Date:	03-MAY-2019
Time Stamp:	21:11:58
Application Type:	Utility under 35 USC 111(a)

Payment information:

Submitted with Payment	no

File Listing:

Document Number	Document Description	File Name	File Size(Bytes)/ Message Digest	Multi Part /.zip	Pages (if appl.)
1	Transmittal Letter	10004-2000116IDSTransmittal.pdf	89344 a5cbde578b17776ab3f7ebf5abfe8b30132ac7e5	no	4

Warnings:

Information:					
2	Foreign Reference	For6-WO04030341Haitsma.pdf	557131 7b4b5ff8d9c0090d93eee904df94953846ba9f0f	no	13
Warnings:					
Information:					
3	Foreign Reference	For7-WO04044820Seo_etal.pdf	610577 3bf30cb2bdaa84bce04ccb2ae33ff83d10d79d88	no	15
Warnings:					
Information:					
4	Foreign Reference	For8-WO04077430Haitsma_etal.pdf	999194 6fd59246df1e8418968c5f58d2f57661952f0f19	no	23
Warnings:					
Information:					
5	Non Patent Literature	NPL10-N100286EPSearchReport.pdf	229447 ec9e0f71f507222ff21049318132a6228cb837c0	no	3
Warnings:					
Information:					
6	Information Disclosure Statement (IDS) Form (SB08)	10004-2000116IDS.pdf	1036754 006a8b36c87030ad267ed71e58ffecc46f243626	no	9
Warnings:					
Information:					
		Total Files Size (in bytes):	3522447		

This Acknowledgement Receipt evidences receipt on the noted date by the USPTO of the indicated documents, characterized by the applicant, and including page counts, where applicable. It serves as evidence of receipt similar to a Post Card, as described in MPEP 503.

New Applications Under 35 U.S.C. 111
If a new application is being filed and the application includes the necessary components for a filing date (see 37 CFR 1.53(b)-(d) and MPEP 506), a Filing Receipt (37 CFR 1.54) will be issued in due course and the date shown on this Acknowledgement Receipt will establish the filing date of the application.
National Stage of an International Application under 35 U.S.C. 371
If a timely submission to enter the national stage of an international application is compliant with the conditions of 35 U.S.C. 371 and other applicable requirements a Form PCT/DO/EO/903 indicating acceptance of the application as a national stage submission under 35 U.S.C. 371 will be issued in addition to the Filing Receipt, in due course.
New International Application Filed with the USPTO as a Receiving Office
If a new international application is being filed and the international application includes the necessary components for an international filing date (see PCT Article 11 and MPEP 1810), a Notification of the International Application Number and of the International Filing Date (Form PCT/RO/105) will be issued in due course, subject to prescriptions concerning national security, and the date shown on this Acknowledgement Receipt will establish the international filing date of the application.

PATENT
Docket No. 10004-2000116

IN THE UNITED STATES PATENT AND TRADEMARK OFFICE

First Named Inventor: Jonathan S. Steuer	Examiner: Davis, Chenea
Serial No.: 16/403,204	Group Art Unit: 2421
Filing Date: May 3, 2019	
For: MEDIA USAGE MONITORING AND MEASUREMENT SYSTEM AND METHOD	

INFORMATION DISCLOSURE STATEMENT
UNDER 37 C.F.R. § 1.97 & § 1.98

Mail Stop Amendment
Commissioner for Patents
P.O. Box 1450
Alexandria, Virginia 22313-1450
Dear Sir:

Pursuant to 37 C.F.R. § 1.97 and § 1.98, Applicant submits for consideration in the above-identified application the documents listed on the attached Form PTO/SB/08a. The Examiner is requested to make these document(s) of record. Copies of certain Foreign Patent Documents are submitted herewith. To the extent required, copies of other references have already been provided in the prosecution of related US Application Nos. 11/139,330 and 12/954,604.

This Information Disclosure Statement is submitted:

☐ With the application.

☒ Within three months of the application filing date or before mailing of a first Office Action on the merits; accordingly, no fee or certification is necessary.

☐ After receipt of a first Office Action on the merits but before mailing of a final Office Action or Notice of Allowance.

- ☐ The fee set forth in 37 CFR 1.17p is paid herewith.
- ☐ A Certification under 37 C.F.R. § 1.97(e) is provided below; accordingly, no fee is believed to be due.
  - ☐ each item of information contained in the information disclosure statement was first cited in any communication from a foreign patent office in a counterpart foreign application not more than three months prior to the filing of the information disclosure statement.
  - ☐ no item of information contained in the information disclosure statement was cited in a communication from a foreign patent office in a counterpart foreign application, and, to the knowledge of the person signing the certification after making reasonable inquiry, no item of information contained in the information disclosure statement was known to any individual designated in § 1.56(c) more than three months prior to the filing of the information disclosure statement.

☐ After mailing of a final Office Action or Notice of Allowance, but before payment of the issue fee.

- ☐ The fee set forth in 37 C.F.R. § 1.17p is paid herewith and a Certification under 37 C.F.R. § 1.97(e) is provided below:
  - ☐ each item of information contained in the information disclosure statement was first cited in any communication from a foreign patent

office in a counterpart foreign application not more than three months prior to the filing of the information disclosure statement.

☐ no item of information contained in the information disclosure statement was cited in a communication from a foreign patent office in a counterpart foreign application, and, to the knowledge of the person signing the certification after making reasonable inquiry, no item of information contained in the information disclosure statement was known to any individual designated in § 1.56(c) more than three months prior to the filing of the information disclosure statement.

Applicant would appreciate the Examiner initialing and returning the Form PTO/SB/08a, indicating that the information has been considered and made of record herein.

The information contained in this Information Disclosure Statement under 37 C.F.R. § 1.97 is not to be construed as a representation that: (i) a complete search has been made; (ii) additional information material to the examination of this application does not exist; (iii) the information, protocols, results and the like reported by third parties are accurate or enabling; or (iv) the above information constitutes prior art to the subject invention.

If the Patent Office determines that an extension of time and/or other relief is required and such required relief has not already been requested, Applicant hereby petitions for any such required relief including extensions of time. The Director is hereby authorized to charge any fees which may be required by this paper to Deposit Account No. 50-4242, referencing docket no. 10004-2000116.

Dated: August 12, 2019

Respectfully submitted,

By: /Michael Mauriel/ Reg. No. 44,226

Michael Mauriel
Registration No. 44,226
Mauriel Kapouytian Woods LLP
15 W. 26th Street, 7th Floor
New York, New York 10010
(212) 532-2527
Attorney(s) for Applicant

(12) INTERNATIONAL APPLICATION PUBLISHED UNDER THE PATENT COOPERATION TREATY (PCT)

(19) World Intellectual Property Organization
International Bureau

(43) International Publication Date
8 April 2004 (08.04.2004)

PCT

(10) International Publication Number
WO 2004/030341 A1

(51) International Patent Classification[7]: H04N 1/32

(21) International Application Number: PCT/IB2003/003658

(22) International Filing Date: 11 August 2003 (11.08.2003)

(25) Filing Language: English

(26) Publication Language: English

(30) Priority Data:
02079072.1 30 September 2002 (30.09.2002) EP

(71) Applicant *(for all designated States except US)*: **KONINKLIJKE PHILIPS ELECTRONICS N.V.** [NL/NL]; Groenewoudseweg 1, NL-5621 BA Eindhoven (NL).

(72) Inventor; and
(75) Inventor/Applicant *(for US only)*: **HAITSMA, Jaap, A.** [NL/NL]; c/o Prof. Holstlaan 6, NL-5656 AA Eindhoven (NL).

(74) Agent: **SCHMITZ, Herman, J., R.**; Philips Intellectual Property & Standards, Prof. Holstlaan 6, NL-5656 AA Eindhoven (NL).

(81) Designated States *(national)*: AE, AG, AL, AM, AT, AU, AZ, BA, BB, BG, BR, BY, BZ, CA, CH, CN, CO, CR, CU, CZ, DE, DK, DM, DZ, EC, EE, ES, FI, GB, GD, GE, GH, GM, HR, HU, ID, IL, IN, IS, JP, KE, KG, KP, KR, KZ, LC, LK, LR, LS, LT, LU, LV, MA, MD, MG, MK, MN, MW, MX, MZ, NI, NO, NZ, OM, PG, PH, PL, PT, RO, RU, SC, SD, SE, SG, SK, SL, SY, TJ, TM, TN, TR, TT, TZ, UA, UG, US, UZ, VC, VN, YU, ZA, ZM, ZW.

(84) Designated States *(regional)*: ARIPO patent (GH, GM, KE, LS, MW, MZ, SD, SL, SZ, TZ, UG, ZM, ZW), Eurasian patent (AM, AZ, BY, KG, KZ, MD, RU, TJ, TM), European patent (AT, BE, BG, CH, CY, CZ, DE, DK, EE, ES, FI, FR, GB, GR, HU, IE, IT, LU, MC, NL, PT, RO, SE, SI, SK, TR), OAPI patent (BF, BJ, CF, CG, CI, CM, GA, GN, GQ, GW, ML, MR, NE, SN, TD, TG).

Declaration under Rule 4.17:
— *as to applicant's entitlement to apply for and be granted a patent (Rule 4.17(ii)) for the following designations AE, AG, AL, AM, AT, AU, AZ, BA, BB, BG, BR, BY, BZ, CA, CH, CN, CO, CR, CU, CZ, DE, DK, DM, DZ, EC, EE, ES, FI, GB, GD, GE, GH, GM, HR, HU, ID, IL, IN, IS, JP, KE, KG, KP, KR, KZ, LC, LK, LR, LS, LT, LU, LV, MA, MD, MG, MK, MN, MW, MX, MZ, NI, NO, NZ, OM, PG, PH, PL, PT, RO, RU, SC, SD, SE, SG, SK, SL, SY, TJ, TM, TN, TR, TT, TZ, UA, UG, UZ, VC, VN, YU, ZA, ZM, ZW, ARIPO*

[Continued on next page]

(54) Title: FINGERPRINT EXTRACTION

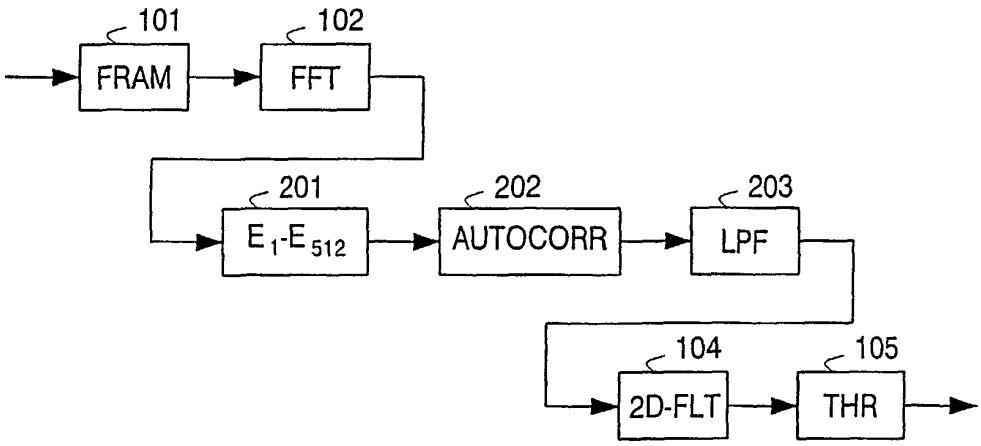

(57) Abstract: Fingerprints are bit strings extracted from a media signal (e.g. an audio or video clip) to identify said media signal. Typically, they are derived from a perceptual property of the signal, for example, the spectral energy distribution of an audio fragment or the luminance distribution of a video image. A method and arrangement for extracting a fingerprint is here disclosed which is robust with respect to shifts of the perceptual property. Such shifts occur, inter alia, when the fingerprint is derived from a logarithmically mapped spectral energy distribution of an audio signal and said audio signal is subjected to speed changes. According to the invention, the fingerprint is not derived from the perceptual property as such, but from its auto-correlation function.

WO 2004/030341 A1

patent (GH, GM, KE, LS, MW, MZ, SD, SL, SZ, TZ, UG, ZM, ZW), Eurasian patent (AM, AZ, BY, KG, KZ, MD, RU, TJ, TM), European patent (AT, BE, BG, CH, CY, CZ, DE, DK, EE, ES, FI, FR, GB, GR, HU, IE, IT, LU, MC, NL, PT, RO, SE, SI, SK, TR), OAPI patent (BF, BJ, CF, CG, CI, CM, GA, GN, GQ, GW, ML, MR, NE, SN, TD, TG)

Published:
— *with international search report*

For two-letter codes and other abbreviations, refer to the "Guidance Notes on Codes and Abbreviations" appearing at the beginning of each regular issue of the PCT Gazette.

Fingerprint extraction

FIELD OF THE INVENTION

The invention relates to a method and arrangement for extracting a fingerprint from a media signal.

BACKGROUND OF THE INVENTION

A fingerprint, also often referred to as signature or hash, is a sequence of bits that is derived from multimedia content, e.g. an audio song, an image, a video clip, etc. Multimedia fingerprints are used, inter alia, in the field of authentication where it is desired to verify whether received content is original or detect whether the content has been tampered with. Fingerprints are also used to identify media content. A service that is likely to become very popular in the near future is audio identification. A fingerprint being derived from an unknown piece of music is sent to a database where the title, artist and other metadata is looked up and returned to the consumer.

A known method of extracting a fingerprint from a media signal is disclosed in Applicant's International Patent Application WO 02/065782. A schematic diagram of this prior-art method is shown in Fig. 1. The media signal (here an audio song) is divided into overlapping frames (**101**). A spectral representation of each frame is obtained by performing a Fast Fourier Transform (**102**). The energy of the audio signal in 33 logarithmically spaced sub-bands is subsequently computed (**103**). The bands lie in the range of 300-2000Hz which is perceptually the most relevant range. The 33 energy levels constitute a sequence of perceptual property samples of the respective audio signal frame. In order to be invariant with respect to the absolute loudness of the audio signal and to prevent a major single audio frequency from producing identical sequences for successive frames, a simple 2-dimensional filter (**104**) is applied to the spectrogram prior to obtaining 32 differential property samples. The sequence is subsequently converted into a bit string by an appropriate thresholding operation (**105**). More particularly, a sub-band in a particular frame is assigned a bit '1' if the energy difference with its neighboring sub-band is larger than the energy difference with its neighboring sub-band in the previous frame. Otherwise, the fingerprint bit is '0'.

The known method produces a string of 32 bits for each audio frame (≈0.4 sec). The frames are preferably overlapping (e.g. by a factor of 31/32) so that the bit strings change slowly with time. This makes the fingerprint extraction invariant with respect to time shifting and frame boundary positioning. Typically, blocks of 256 overlapping frames, i.e. 256×32=8192 bits (≈3 sec of audio) are used to identify a song.

The prior-art fingerprint extraction method has turned out to be very robust against almost all commonly used audio processing steps such as MP3 encoding, sample rate conversion, D/A and A/D conversion, equalization. However, it is not very robust against speed changes. It is quite common for radio stations to speed up audio by a few percent. They supposedly do this for two reasons. First, the duration of songs is then shorter and therefore it enables them to broadcast more commercials. Secondly, the beat of the song is faster and listeners seem to prefer this. The speed changes typically lie between zero and four percent.

OBJECT AND SUMMARY OF THE INVENTION

It is an object of the invention to provide an improved method and arrangement for extracting a fingerprint from a media signal.

To this end, the method according to the invention comprises the steps of deriving from said media signal a sequence of samples of a given perceptual property of the signal; subjecting the sequence of property samples to an auto-correlation function to obtain a sequence of auto-correlation values; comparing said auto-correlation values with respective thresholds; and representing the results of said comparisons by respective bits of the fingerprint.

The method according to the invention differs from the prior-art method in that the fingerprint bits are not derived from the perceptual property of the signal as such, but from the auto-correlation of said property. The invention is based on the recognition that a speed change of an audio signal causes energy levels in sub-bands to be shifted from one sub-band to another, and exploits the insight that the auto-correlation function is shift invariant.

The auto-correlation function is well-known in the continuous (time) domain. However, we are dealing here with a finite sequence of property values (e.g. energy levels). Therefore, in a practical embodiment of the method according to the invention, the desired auto-correlation is approximated by correlating a sub-sequence of property samples with the complete sequence of property samples.

The auto-correlation function is preferably computed from a statistically significant number of property samples, which is larger than the desired number of

fingerprint bits. Down-sampling of the computed auto-correlation function is provided to obtain the desired number of auto-correlation values.

BRIEF DESCRIPTION OF THE DRAWINGS

Fig. 1 shows schematically a prior-art arrangement for extracting a fingerprint from an audio signal.

Fig. 2 shows schematically an arrangement for extracting a fingerprint from an audio signal according to the invention.

DESCRIPTION OF EMBODIMENTS

Speed changes of an audio signal cause misalignment in both the temporal and frequency domain. Considering time misalignment, an audio excerpt subjected to a speed change of, say, 2% causes the 250th fingerprint of this excerpt to be extracted at the position of the 255th fingerprint of the original excerpt. Fortunately, in order to be shift-invariant, the fingerprints are constructed in such a way that they possess correlation along the time-axis. Therefore, the BER (bit error rate) between the original excerpt and the same excerpt with a speed change does not increase dramatically due to the temporal misalignment.

The main problem caused by large speed changes is therefore the frequency misalignment. In the prior arrangement, which is shown in Fig. 1, a 2% speedup will result in a scaling of the frequency axis of the spectrum that is obtained with the Fourier Transform. For example, a tone of 500Hz then results in a tone of 510Hz and a tone of 1000Hz results in a tone of 1020Hz. After calculating the spectrum, the energy in logarithmically spaced bands is determined. Since the bands are logarithmically spaced, the speed change results in a shift of energy from one band to the next. The more energy that shifts from one band to the next, the greater the probability that the extracted fingerprint bits are erroneous. This is due to the fact that the fingerprint bits are determined by energy differences of neighboring bands.

It has been proposed to use a brute force approach for identifying audio with large speed changes. The brute force approach consists of storing fingerprints extracted at multiple speeds in the database, or querying the database with fingerprints that are extracted at multiple speeds. The disadvantage of this method is that the search speed and/or storage requirements increase by a factor N, where N is the number of different speeds that is necessary for a certain application.

Fig. 2 shows an arrangement for extracting a fingerprint from an audio signal according to the invention. In the Figure, the same reference numerals are used for functions

that are identical with or similar to the steps that have already been discussed with reference to Fig. 1. More particularly, the audio signal is divided into overlapping frames (**101**) and the spectrum of each frame is computed (**102**).

An auto-correlation step (**202**) is the fundamental step to achieve the better speed-change resilience. A speed change results in a shift of the computed energy vector. Auto-correlation has the property that it is shift-invariant. As is generally known, the auto-correlation $\rho(x)$ of a continuous function f(t) is:

$$\rho(x) = \int_{-\infty}^{\infty} f(t)f(t+x)dt$$

However, we are not dealing here with an infinite continuous function f(t) but a finite sequence of property samples (energies). In order to compute the auto-correlation from a statistically significant number of property samples, the energy of 512 sub-bands is computed (**201**) instead of 33. The bands are still logarithmic and still lie in the range of 300 to 2000Hz. Thus the bands have a smaller width. The auto-correlation is approximated by correlating a sub-sequence of energies with the complete sequence. More specifically, the auto-correlation $\rho[x]$ is calculated from the sub-band energy samples E(j) as follows:

$$\rho[x] = \sum_{j=1}^{M} E(K+j)E(x+j) \quad \text{for } x=1,2,..,N\text{-}M$$

where N denotes the length of the whole energy vector (here N=512), M denotes the length of the sub-sequence and K denotes the position where the sub-sequence starts in the complete sequence. Typical settings for M and K are 64 and 96, respectively. To increase robustness, the resulting auto-correlation values are optionally low-pass filtered (**203**). The low-pass filtered auto-correlation has 512-64 = 448 values, whereas 33 input values are required for the 2-dimensional filter (**104**) preceding the threshold operation (**105**). Therefore, the 448 auto-correlation values are down-sampled to 33 values in a down-sampler (**204**). The resulting fingerprint is a 32-bit string for each frame.

Although embodiments of the method and arrangement have been described with reference to audio fingerprint extraction, the invention is not restricted thereto. Applicant's International Patent Application WO 02/065782, already cited above, discloses a video fingerprint extracting method in which the fingerprint is derived from the mean luminance values of image blocks into which each image is divided. According to the invention, each image is now divided into a larger number of blocks, and a sub-set of the blocks (a "super-block") is correlated with the whole image for a number of positions of said

super-block. The obtained sequence of auto-correlation values is invariant to shifts of the video image. The sequence is optionally low-pass filtered and subsequently down-sampled.

The invention can be summarized as follows. Fingerprints are bit strings extracted from a media signal (e.g. an audio or video clip) to identify said media signal. Typically, they are derived from a perceptual property of the signal, for example, the spectral energy distribution of an audio fragment or the luminance distribution of a video image. A method and arrangement for extracting a fingerprint is here disclosed which is robust with respect to shifts of the perceptual property. Such shifts occur, inter alia, when the fingerprint is derived from a logarithmically mapped spectral energy distribution of an audio signal and said audio signal is subjected to speed changes. According to the invention, the fingerprint is not derived from the perceptual property as such, but from its auto-correlation function.

CLAIMS:

1. A method of extracting a fingerprint from a media signal, comprising the steps of extracting from said media signal a sequence of samples of a given perceptual property of the signal, and deriving from said sequence a binary sequence constituting said fingerprint, characterized in that the method comprises the steps of:

- subjecting the sequence of property samples to an auto-correlation function (202) to obtain a sequence of auto-correlation values;
- comparing (105) said auto-correlation values with respective thresholds; and
- representing the results of said comparisons by respective bits of the fingerprint.

2. A method as claimed in claim 1, wherein said step of subjecting the sequence of property samples to an auto-correlation function comprises correlating a sub-sequence of property samples with the complete sequence of property samples.

3. A method as claimed in claim 1, wherein said step of subjecting the sequence of property samples to an auto-correlation function further includes down-sampling (204) the sequence of auto-correlation values to obtain a desired number of auto-correlation values.

4. A method as claimed in claim 1, wherein said step of deriving from said media signal a sequence of perceptual property values comprises dividing an audio signal into sub-bands and computing the energies of said audio sub-bands.

5. A method as claimed in claim 1, wherein said step of deriving from said media signal a sequence of perceptual properties comprises dividing an image into blocks and computing the luminances of said image blocks.

6. An apparatus for extracting a fingerprint from a media signal, comprising means for deriving from said media signal a sequence of samples of a given perceptual property of the signal, and means for deriving from said sequence a binary sequence constituting said fingerprint, characterized in that the apparatus comprises:

- means for subjecting the sequence of property samples to an auto-correlation function to obtain a sequence of auto-correlation values;
- means for comparing said auto-correlation values with respective thresholds; and
- representing the results of said comparisons by respective bits of the fingerprint.

7. A computer program comprising instructions to cause a programmable device to perform the steps of:

- deriving from a received media signal a sequence of samples of a given perceptual property of the signal;
- subjecting the sequence of property samples to an auto-correlation function to obtain a sequence of auto-correlation values;
- comparing said auto-correlation values with respective thresholds; and
- representing the results of said comparisons by respective bits of a fingerprint.

1/1

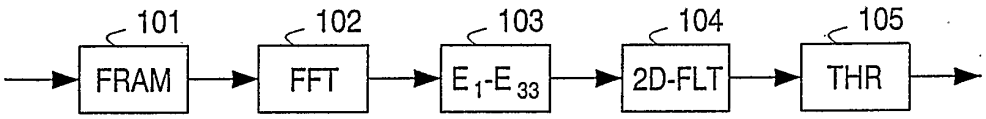
101
FRAM
102
FFT
103
E1-E33
104
2D-FLT
105
THR

Fig.1

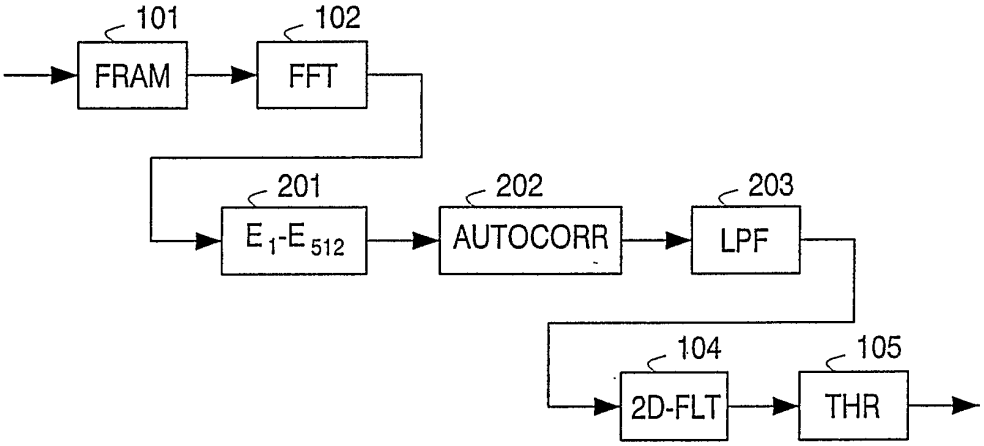
101
FRAM
102
FFT
201
E1-E512
202
AUTOCORR
203
LPF
104
2D-FLT
105
THR

Fig.2

INTERNATIONAL SEARCH REPORT

PCT/IB 03/03658

A. CLASSIFICATION OF SUBJECT MATTER

IPC 7 H04N1/32

According to International Patent Classification (IPC) or to both national classification and IPC

B. FIELDS SEARCHED

Minimum documentation searched (classification system followed by classification symbols)

IPC 7 H04N H04H

Documentation searched other than minimum documentation to the extent that such documents are included in the fields searched

Electronic data base consulted during the international search (name of data base and, where practical, search terms used)

EPO-Internal, WPI Data, PAJ, INSPEC, IBM-TDB

C. DOCUMENTS CONSIDERED TO BE RELEVANT

Category °	Citation of document, with indication, where appropriate, of the relevant passages	Relevant to claim No.
A	US 5 621 454 A (ELLIS MICHAEL D ET AL) 15 April 1997 (1997-04-15) abstract column 11, line 49 -column 12, line 21 column 19, line 6 -column 23, line 67 ---	1,4-7
A	US 5 612 729 A (ELLIS MICHAEL D ET AL) 18 March 1997 (1997-03-18) abstract ---	1,4,6,7
A	WO 02 065782 A (KONINKL PHILIPS ELECTRONICS NV) 22 August 2002 (2002-08-22) cited in the application the whole document ---	1,6,7
A	US 6 266 429 B1 (EPSTEIN MICHAEL ET AL) 24 July 2001 (2001-07-24) ---	
	-/--	

[X] Further documents are listed in the continuation of box C.

[X] Patent family members are listed in annex.

° Special categories of cited documents :

"A" document defining the general state of the art which is not considered to be of particular relevance

"E" earlier document but published on or after the international filing date

"L" document which may throw doubts on priority claim(s) or which is cited to establish the publication date of another citation or other special reason (as specified)

"O" document referring to an oral disclosure, use, exhibition or other means

"P" document published prior to the international filing date but later than the priority date claimed

"T" later document published after the international filing date or priority date and not in conflict with the application but cited to understand the principle or theory underlying the invention

"X" document of particular relevance; the claimed invention cannot be considered novel or cannot be considered to involve an inventive step when the document is taken alone

"Y" document of particular relevance; the claimed invention cannot be considered to involve an inventive step when the document is combined with one or more other such documents, such combination being obvious to a person skilled in the art.

"&" document member of the same patent family

Date of the actual completion of the international search	Date of mailing of the international search report
25 November 2003	04/12/2003

Name and mailing address of the ISA	Authorized officer
European Patent Office, P.B. 5818 Patentlaan 2 NL – 2280 HV Rijswijk Tel. (+31–70) 340–2040, Tx. 31 651 epo nl, Fax: (+31–70) 340–3016	Hazel, J

INTERNATIONAL SEARCH REPORT

PCT/IB 03/03658

C.(Continuation) DOCUMENTS CONSIDERED TO BE RELEVANT

Category °	Citation of document, with indication,where appropriate, of the relevant passages	Relevant to claim No.
A	US 5 436 653 A (ELLIS MICHAEL D ET AL) 25 July 1995 (1995-07-25) -----	

Patent document cited in search report		Publication date	Patent family member(s)			Publication date
US 5621454	A	15-04-1997	US	5436653	A	25-07-1995
			AT	232036	T	15-02-2003
			AU	718227	B2	13-04-2000
			AU	3427297	A	06-11-1997
			AU	678163	B2	22-05-1997
			AU	4226093	A	29-11-1993
			CA	2134748	A1	11-11-1993
			DE	69332671	D1	06-03-2003
			EP	1261155	A2	27-11-2002
			EP	0748563	A1	18-12-1996
			JP	8500471	T	16-01-1996
			WO	9322875	A1	11-11-1993
			US	5504518	A	02-04-1996
			US	5612729	A	18-03-1997
			US	5572246	A	05-11-1996
US 5612729	A	18-03-1997	US	5436653	A	25-07-1995
			AT	232036	T	15-02-2003
			AU	718227	B2	13-04-2000
			AU	3427297	A	06-11-1997
			AU	678163	B2	22-05-1997
			AU	4226093	A	29-11-1993
			CA	2134748	A1	11-11-1993
			DE	69332671	D1	06-03-2003
			EP	1261155	A2	27-11-2002
			EP	0748563	A1	18-12-1996
			JP	8500471	T	16-01-1996
			WO	9322875	A1	11-11-1993
			US	5504518	A	02-04-1996
			US	5621454	A	15-04-1997
			US	5572246	A	05-11-1996
WO 02065782	A	22-08-2002	EP	1362485	A1	19-11-2003
			WO	02065782	A1	22-08-2002
			US	2002178410	A1	28-11-2002
US 6266429	B1	24-07-2001	CN	1288633	T	21-03-2001
			WO	0018109	A1	30-03-2000
			EP	1046277	A1	25-10-2000
			JP	2002525983	T	13-08-2002
US 5436653	A	25-07-1995	AT	232036	T	15-02-2003
			AU	718227	B2	13-04-2000
			AU	3427297	A	06-11-1997
			AU	678163	B2	22-05-1997
			AU	4226093	A	29-11-1993
			CA	2134748	A1	11-11-1993
			DE	69332671	D1	06-03-2003
			EP	1261155	A2	27-11-2002
			EP	0748563	A1	18-12-1996
			JP	8500471	T	16-01-1996
			WO	9322875	A1	11-11-1993
			US	5504518	A	02-04-1996
			US	5612729	A	18-03-1997
			US	5621454	A	15-04-1997
			US	5572246	A	05-11-1996

(12) INTERNATIONAL APPLICATION PUBLISHED UNDER THE PATENT COOPERATION TREATY (PCT)

(19) World Intellectual Property Organization
International Bureau

(43) International Publication Date
27 May 2004 (27.05.2004)

PCT

(10) International Publication Number
WO 2004/044820 A1

(51) International Patent Classification[7]: G06F 21/00, G11B 20/00, 27/11

(21) International Application Number: PCT/IB2003/004894

(22) International Filing Date: 31 October 2003 (31.10.2003)

(25) Filing Language: English

(26) Publication Language: English

(30) Priority Data:
02079720.5 12 November 2002 (12.11.2002) EP

(71) Applicant *(for all designated States except US)*: **KONINKLIJKE PHILIPS ELECTRONICS N.V.** [NL/NL]; Groenewoudseweg 1, NL-5621 BA Eindhoven (NL).

(72) Inventors; and
(75) Inventors/Applicants *(for US only)*: **SEO, Jin, S.** [KR/KR]; Prof . Holstlaan 6, NL-5656 AA Eindhoven (NL). **HAITSMA, Jaap, A.** [NL/NL]; Prof . Holstlaan 6, NL-5656 AA Eindhoven (NL). **KALKER, Antonius, A., C., M.** [NL/NL]; Prof. Holstlaan 6, NL-5656 AA Eindhoven (NL).

(74) Agent: **SCHMITZ, Herman, J., R.**; Philips Intellectual Property & Standards, Prof. Holstlaan 6, NL-5656 AA Eindhoven (NL).

(81) Designated States *(national)*: AE, AG, AL, AM, AT, AU, AZ, BA, BB, BG, BR, BY, BZ, CA, CH, CN, CO, CR, CU, CZ, DE, DK, DM, DZ, EC, EE, EG, ES, FI, GB, GD, GE, GH, GM, HR, HU, ID, IL, IN, IS, JP, KE, KG, KP, KR, KZ, LC, LK, LR, LS, LT, LU, LV, MA, MD, MG, MK, MN, MW, MX, MZ, NI, NO, NZ, OM, PG, PH, PL, PT, RO, RU, SC, SD, SE, SG, SK, SL, SY, TJ, TM, TN, TR, TT, TZ, UA, UG, US, UZ, VC, VN, YU, ZA, ZM, ZW.

(84) Designated States *(regional)*: ARIPO patent (BW, GH, GM, KE, LS, MW, MZ, SD, SL, SZ, TZ, UG, ZM, ZW), Eurasian patent (AM, AZ, BY, KG, KZ, MD, RU, TJ, TM), European patent (AT, BE, BG, CH, CY, CZ, DE, DK, EE, ES, FI, FR, GB, GR, HU, IE, IT, LU, MC, NL, PT, RO, SE, SI, SK, TR), OAPI patent (BF, BJ, CF, CG, CI, CM, GA, GN, GQ, GW, ML, MR, NE, SN, TD, TG).

Published:
— *with international search report*

For two-letter codes and other abbreviations, refer to the "Guidance Notes on Codes and Abbreviations" appearing at the beginning of each regular issue of the PCT Gazette.

WO 2004/044820 A1

(54) Title: FINGERPRINTING MULTIMEDIA CONTENTS

(57) Abstract: Disclosed is a method and arrangement for extracting a fingerprint from a multimedia signal, particularly an audio signal, which is invariant to speed changes of the audio signal. To this end, the method comprises extracting (12,13) a set of robust perceptual features from the multimedia signal, for example, the power spectrum of the audio signal. A Fourier-Mellin transform (15) converts the power spectrum into Fourier coefficients that undergo a phase change only if the audio playback speed changes. Their magnitudes or phase differences (16) constitute a speed change-invariant fingerprint. By a thresholding operation (19), the fingerprint can be represented by a compact number of bits.

Fingerprinting multimedia contents

FIELD OF THE INVENTION

The invention relates to a method and arrangement for extracting a fingerprint from a multimedia signal.

BACKGROUND OF THE INVENTION

Fingerprints, in the literature sometimes referred to as hashes or signatures, are binary sequences extracted from multimedia contents, which can be used to identify said contents. Unlike cryptographic hashes of data files (which change as soon as a single bit of the data file changes), fingerprints of multimedia contents (audio, images, video) are to a certain extent invariant to processing such as compression and D/A & A/D conversion. This is generally achieved by extracting the fingerprint from perceptually essential features of the contents.

A prior-art method of extracting a fingerprint from a multimedia signal is disclosed in International Patent Application WO 02/065782. The method comprises the steps of extracting a set of robust perceptual features from the multimedia signal, and converting the set of features into the fingerprint. For audio signals, the perceptual features are energies of the audio contents in selected sub-bands. For image signals, the perceptual features are average luminances of blocks into which the image is divided. The conversion into a binary sequence is performed by thresholding, for example, by comparing each feature sample with its neighbors.

An attractive application of fingerprinting is content identification. The artist and title of a music song or video clip can be identified by extracting a fingerprint from an excerpt of the unknown material and sending it to a large database of fingerprints in which said information is stored.

Experiments have shown that the prior-art method of extracting fingerprints from an audio signal is very robust against almost all commonly used audio processing operations, such as MP3 compression and decompression, equalization, re-sampling, noise addition, and D/A & A/D conversion.

It is quite common for radio stations to speed up audio by a few percent. They supposedly do this for two reasons. First, the duration of songs is then shorter and therefore it enables them to broadcast more commercials. Secondly, the beat of the song is faster and the audience seems to prefer this. The speed changes typically lie between zero and four percent.

Speed changes of audio material cause misalignment in both the temporal and the frequency domain. The prior-art fingerprint extraction method does not suffer from misalignment in the temporal domain, because the fingerprint is a concatenation of small sub-fingerprints being extracted from overlapping audio frames. A speed change of, say 2%, merely causes the 250th sub-fingerprint of an excerpt to be extracted at the position of the 255th sub-fingerprint of the corresponding original excerpt.

Misalignment in the frequency domain is caused by spectral energies shifting to other frequencies. The above example of 2% speedup causes all audio frequencies to increase by 2%. In the prior-art audio fingerprint extraction method, this causes the energies in the selected sub-bands (and thus the fingerprint) to be changed. As a result thereof, the fingerprints can no longer be found in a database, unless a plurality of fingerprints corresponding to different speed versions is stored in the database for each song.

Similar considerations apply to image and video material and to other kinds of perceptual features being used for fingerprint extraction.

OBJECT AND SUMMARY OF THE INVENTION

It is an object of the invention to provide an improved method and arrangement for extracting a fingerprint from multimedia contents. It is a particular object of the invention to provide a method and arrangement for extracting a fingerprint from an audio signal that is substantially invariant to speed changes of the audio signal.

To this end, the method of extracting a fingerprint from a multimedia signal according to the invention comprises the steps of: extracting a set of robust perceptual features from the multimedia signal; subjecting the extracted set of features to a Fourier-Mellin transform; and converting the transformed set of features into a sequence constituting the fingerprint.

The invention exploits the insight that the Fourier-Mellin transform consists of a log mapping and a Fourier transform. The log mapping converts scaling of the energy spectrum due to a speed change in a shift. The subsequent Fourier transform converts the shift into a phase change which is the same for all Fourier coefficients. Magnitudes of the Fourier coefficients are not affected by the speed change. A fingerprint derived from the

magnitude or from the derivative of the phase of the Fourier coefficients is thus invariant to speed changes.

BRIEF DESCRIPTION OF THE DRAWINGS

Fig. 1 shows schematically an arrangement for extracting a fingerprint from a multimedia signal or, equivalently, the corresponding steps of a method of extracting such a fingerprint according to the invention.

Figs. 2 and 3 show diagrams to illustrate the operation of a log mapping circuit, which is shown in Fig. 1.

DESCRIPTION OF EMBODIMENTS

The invention will be described with reference to an arrangement for extracting a fingerprint from an audio signal. Fig. 1 shows schematically such an arrangement according to the invention.

The arrangement comprises a framing circuit **11**, which divides the audio signal into overlapping frames of approx. 0.4 seconds and an overlap factor of 31/32. The overlap is to be chosen such that a high correlation between sub-fingerprints of subsequent frames is obtained. Prior to the division into frames, the audio signal has been limited to a frequency range of approx. 300Hz-3kHz and down-sampled (not shown), so that each frame comprises 2048 samples.

A Fourier transform circuit **12** computes the spectral representation of every frame. In the next block **13**, the power spectrum of the audio frame is computed, for example, by squaring the magnitudes of the (complex) Fourier coefficients. For each frame of 2048 audio signal samples, the power spectrum is represented by 1024 samples (positive and corresponding negative frequencies have the same magnitudes). The samples of the power spectrum constitute a set of robust perceptual features. The spectrum is not substantially affected by operations such as D/A & A/D conversion or MP3 compression.

After calculating the power spectrum, an optional normalization circuit **14** applies local normalization to the power spectrum. Such a normalization (which includes de-convolution and filtering) improves the performance as it obtains a more decisive and robust representation of the power spectrum. Local normalization preserves the important characteristics of the spectrum and is robust against all kinds of audio processing including local modifications of the audio spectrum, such as equalization. The most promising approach is to emphasize the tonal part of the spectrum by normalizing it with its local mean.

Mathematically, the normalized spectrum $N(\omega)$ is obtained by dividing the spectrum $A(\omega)$ by its local mean $Lm(\omega)$ as follows:

$$N(\omega) = \frac{A(\omega)}{Lm(\omega)}$$

The local mean can be calculated in various ways, for example:

$$Lm(\omega) = \frac{1}{2\delta}\int_{\omega-\delta}^{\omega+\delta} A(\tau)d\tau \text{ (arithmetic mean), or}$$

$$Lm(\omega) = \exp\left[\frac{1}{2\delta}\int_{\omega-\delta}^{\omega+\delta} \log A(\tau)d\tau\right] \text{ (geometric mean) and so on.}$$

The normalized spectrum remains invariant to equalization. Moreover, tonal information is directly related to human hearing and well preserved after most of the audio processing. The importance of tonal information is widely accepted and has been utilized in audio recognition and bit allocation of audio compression. Although local normalization has many advantages, the normalization is not consistent after compression if there are no tonal components between ω-δ and ω+δ. To mitigate this effect, integration over time and a total-energy term is added to $Lm(\omega)$. Then a modified local mean $Lm'(\omega)$ is given as follows:

$$Lm'(\omega) = \frac{1}{2\delta}\int_{t-\Delta}^{t}\int_{\omega-\delta}^{\omega+\delta} A(\tau)d\tau + \alpha\int_{t-\Delta}^{t}\int_{-\infty}^{\infty} A(\tau)d\tau$$

where Δ and α are constants, which are determined experimentally. Integration over time makes the normalization more consistent, and the total-energy term limits the increase of small non-tonal components after normalization.

The invention resides in the application of a Fourier-Mellin transform **15** to the power spectrum to achieve speed change resilience. The Fourier-Mellin transform consists of a log mapping process **151** and a Fourier transform (or inverse Fourier transform) **152**.

Figs. 2 and 3 show diagrams to illustrate the log mapping operation. In Fig. 2, reference numeral **21** denotes the samples of the power spectrum of an audio frame as supplied by the Fourier transform **12** in the case that the audio signal is being played back at normal speed. For the sake of convenience, a smooth power spectrum in the range 300-3,000Hz is shown. In reality, the spectrum will generally exhibit a jagged outline. Reference numeral **22** in Fig. 2 denotes the power spectrum of the same audio frame in the

case that the audio signal is being played back at an increased speed. As can be seen in the Figure, the speed change causes the power spectrum to be scaled.

Fig. 3 shows the corresponding power spectra as computed by the log mapping circuit **151**. The power spectrum now represents the energy of the audio frame in a selected number of successive logarithmically spaced sub-bands. Reference numeral **31** denotes the log mapped power spectrum for the audio signal being played back at normal speed. Reference numeral **32** denotes the log-mapped power spectrum for the audio signal being played back at the increased speed.

The process of log mapping can be carried out in several ways. In the embodiment, which is shown in Fig. 3, the input power spectrum is interpolated and re-sampled at logarithmically spaced intervals. In another embodiment (not shown), the samples within logarithmically spaced (and sized) sub-bands of the input power spectrum are accumulated to provide respective samples of the log-mapped power spectrum.

The number of samples representing the log-mapped power spectrum is chosen to be such that subsequent operations can be carried out with sufficient precision. In a practical embodiment, the log-mapped power spectrum is represented by 512 samples. It will be appreciated from inspection of Fig. 3 that the log-mapping operation translates the scaling (**21→22**) of the power spectrum due to the speed change into a shift (**31→32**). As long as the playback speed of the audio signal does not change within the frame period (which is a reasonable assumption in practice), the shift is the same for all coefficients.

The subsequent Fourier transform **152** translates said shift into a change of the phase of the complex Fourier coefficients. The phase change is the same for all coefficients. Thus, if the speed of the audio signal changes, the phases of all Fourier coefficients computed by Fourier transform circuit **152** change by an identical amount. In other words, the magnitudes of the coefficients as well as their phase differences are invariant to speed changes. They are calculated in a computing circuit **16**. As the magnitudes and phase differences are the same for positive and negative frequencies, the number of unique values is 256.

The vector of 256 magnitudes or phase differences representing the log-mapped power spectrum of an audio frame is hereinafter denoted F(k,n), where k=1..256 and n is the audio frame number. In fact, the vector constitutes a speed change-invariant fingerprint. However, the number of values is large, and each value requires a multi-bit representation in a digital fingerprinting system. The number of bits to represent the fingerprint can be reduced by selecting the lowest-order values only. This is performed by a

selection circuit **17**. It has been found that the 32 lowest values (the most significant coefficients) provide a sufficiently accurate representation of the log-mapped power spectrum.

The number of bits can be further reduced by subjecting the selected magnitudes or phase differences to values to a thresholding process. In a simple embodiment, a thresholding stage **19** generates one bit for each feature sample, for example, a '1' if the value F(k,n) is above a threshold and a '0' if it is below said threshold. Alternatively, a fingerprint bit is given the value '1' if the corresponding feature sample F(k,n) is larger than its neighbor, otherwise it is '0'. To this end, the feature samples F(k,n) are first filtered in a one-dimensional temporal filter **18**. The present embodiment uses an improved version of the latter alternative. In this preferred embodiment, a fingerprint bit '1' is generated if the feature sample F(k,n) is larger than its neighbor and if this was also the case in the previous frame, otherwise the fingerprint bit is '0'. In this embodiment, the filter **18** is a two-dimensional filter. In mathematical notation:

$$FP(k,n) = \begin{cases} 1 & \text{if } F(k,n) - F(k+1,n) - (F(k,n-1) - F(k+1,n-1)) > 0 \\ 0 & \text{if } F(k,n) - F(k+1,n) - (F(k,n-1) - F(k+1,n-1)) \leq 0 \end{cases}$$

When thresholding is used, each sub-fingerprint being extracted from an audio frame has 32 bits.

Although the invention has been described with reference to audio fingerprinting, it can also be applied to other multimedia signals such as images and motion video. While speed changes are often applied to audio signals, affine transformations such as shift, scaling and rotation, are often applied to images and video. The method according to the invention can be used to improve robustness to such affine transformations. In the case of a two-dimensional signal, the log-mapping process **151** is changed into log-polar mapping to make it invariant against rotation as well as scaling (retaining aspect ratio). A log-log mapping makes it invariant to changes of the aspect ratio. The magnitude of the Fourier-Mellin transform (now a 2D transform) and double differentiation of its phase along the frequency axis have the desired affine invariant property.

Disclosed is a method and arrangement for extracting a fingerprint from a multimedia signal, particularly an audio signal, which is invariant to speed changes of the audio signal. To this end, the method comprises extracting (12,13) a set of robust perceptual features from the multimedia signal, for example, the power spectrum of the audio signal. A Fourier-Mellin transform (15) converts the power spectrum into Fourier coefficients that undergo a phase change only if the audio playback speed changes. Their magnitudes or phase

differences (16) constitute a speed change-invariant fingerprint. By a thresholding operation (19), the fingerprint can be represented by a compact number of bits.

CLAIMS:

1. A method of extracting a fingerprint from a multimedia signal, comprising the steps of:

- extracting (12,13) a set of robust perceptual features from the multimedia signal;
- subjecting (15) the extracted set of features to a Fourier-Mellin transform;
- converting (16,19) the transformed set of features into a sequence constituting the fingerprint.

2. A method as claimed in claim 1, wherein said converting step includes converting (16,ABS) the magnitudes of the Fourier-Mellin transform.

3. A method as claimed in claim 1, wherein said converting step includes converting (16,$\Delta\varphi$) the derivative of the phase of the Fourier-Mellin transform.

4. A method as claimed in claim 1, wherein the multimedia signal is an audio signal and said Fourier-Mellin transform includes a one-dimensional log mapping process being applied to the set of perceptual features.

5. A method as claimed in claim 1, wherein the multimedia signal is an image or video signal and said Fourier-Mellin transform includes a two-dimensional log-polar mapping process being applied to the set of perceptual features.

6. A method as claimed in claim 1, wherein the multimedia signal is an image or video signal and said Fourier-Mellin transform includes a two-dimensional log-log mapping process being applied to the set of perceptual features.

7. A method as claimed in claim 1, wherein said extracting step includes normalization of the set of perceptual features.

8. An apparatus for extracting a fingerprint from a multimedia signal, comprising:

- means (12,13) for extracting a set of robust perceptual features from the multimedia signal;
- means (15) for subjecting the extracted set of features to a Fourier-Mellin transform;
- means (16,19) for converting the transformed set of features into a sequence constituting the fingerprint.

1/2

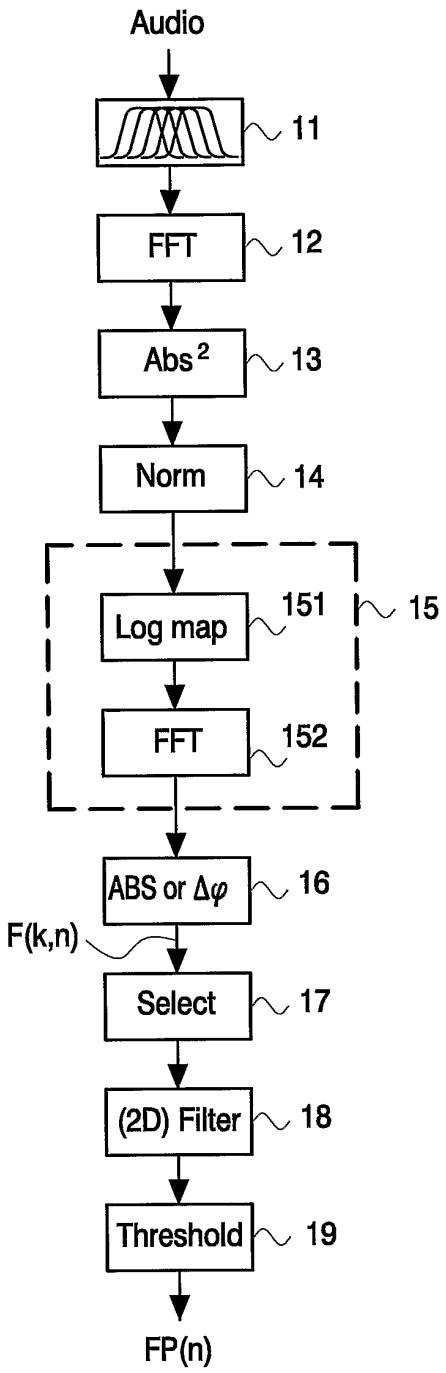
Audio
11
FFT
12
Abs²
13
Norm
14
Log map
151
15
FFT
152
ABS or Δφ
16
F(k,n)
Select
17
(2D) Filter
18
Threshold
19
FP(n)

FIG. 1

2/2

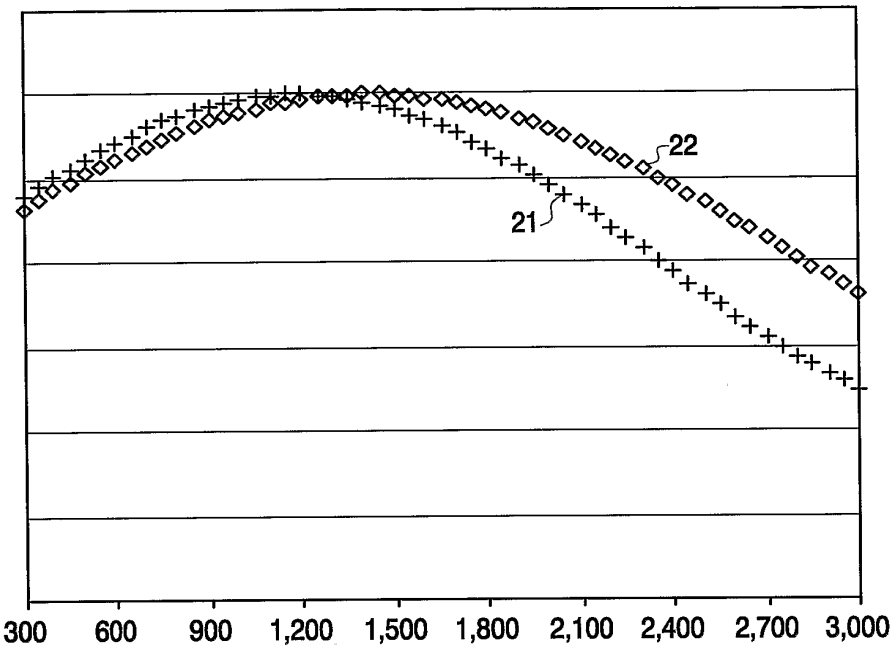
22
21
300
600
900
1,200
1,500
1,800
2,100
2,400
2,700
3,000

FIG. 2

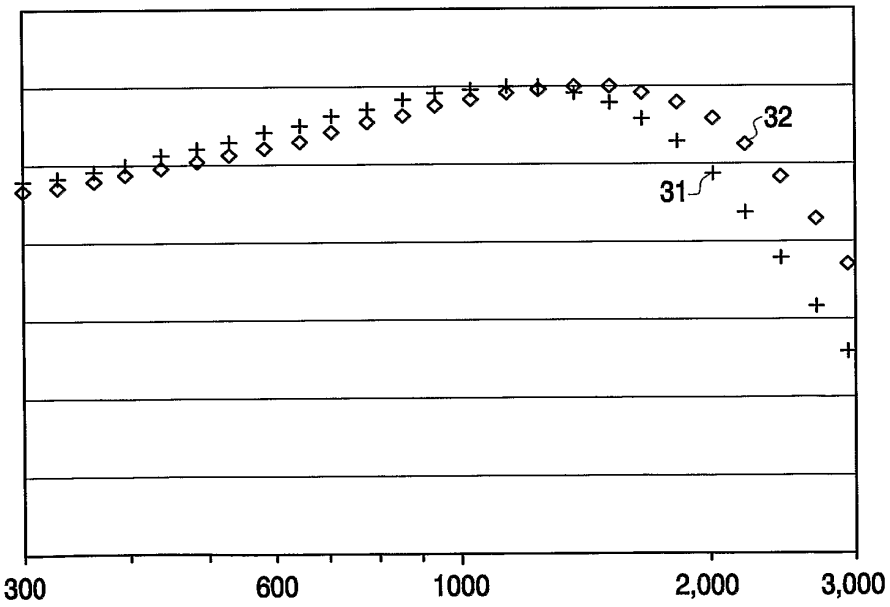
32
31
300
600
1000
2,000
3,000

FIG. 3

INTERNATIONAL SEARCH REPORT

Intern[illegible]al Application No
PCT/IB 03/04894

A. CLASSIFICATION OF SUBJECT MATTER
IPC 7 G06F21/00 G11B20/00 G11B27/11

According to International Patent Classification (IPC) or to both national classification and IPC

B. FIELDS SEARCHED

Minimum documentation searched (classification system followed by classification symbols)
IPC 7 G06F G11B

Documentation searched other than minimum documentation to the extent that such documents are included in the fields searched

Electronic data base consulted during the international search (name of data base and, where practical, search terms used)

EPO-Internal, INSPEC

C. DOCUMENTS CONSIDERED TO BE RELEVANT

Category °	Citation of document, with indication, where appropriate, of the relevant passages	Relevant to claim No.
X	QIN-SHENG CHEN ET AL: "SYMMETRIC PHASE-ONLY MATCHED FILTERING OF FOURIER-MELLIN TRANSFORMSFOR IMAGE REGISTRATION AND RECOGNITION" IEEE TRANSACTIONS ON PATTERN ANALYSIS AND MACHINE INTELLIGENCE, IEEE INC., vol. 16, no. 12, 1 December 1994 (1994-12-01), pages 1156-1168, XP000486818 NEW YORK, US ISSN: 0162-8828	1,3,7,8
Y	the whole document	2,4-6

-/--

[X] Further documents are listed in the continuation of box C.

[X] Patent family members are listed in annex.

° Special categories of cited documents :

"A" document defining the general state of the art which is not considered to be of particular relevance

"E" earlier document but published on or after the international filing date

"L" document which may throw doubts on priority claim(s) or which is cited to establish the publication date of another citation or other special reason (as specified)

"O" document referring to an oral disclosure, use, exhibition or other means

"P" document published prior to the international filing date but later than the priority date claimed

"T" later document published after the international filing date or priority date and not in conflict with the application but cited to understand the principle or theory underlying the invention

"X" document of particular relevance; the claimed invention cannot be considered novel or cannot be considered to involve an inventive step when the document is taken alone

"Y" document of particular relevance; the claimed invention cannot be considered to involve an inventive step when the document is combined with one or more other such documents, such combination being obvious to a person skilled in the art.

"&" document member of the same patent family

Date of the actual completion of the international search	Date of mailing of the international search report
12 February 2004	03/03/2004
Name and mailing address of the ISA European Patent Office, P.B. 5818 Patentlaan 2 NL - 2280 HV Rijswijk Tel. (+31-70) 340-2040, Tx. 31 651 epo nl, Fax: (+31-70) 340-3016	Authorized officer Quélavoine, R

1

Form PCT/ISA/210 (second sheet) (July 1992)

INTERNATIONAL SEARCH REPORT

Intern[illegible]nal Application No
PCT/IB 03/04894

C.(Continuation) DOCUMENTS CONSIDERED TO BE RELEVANT

Category °	Citation of document, with indication,where appropriate, of the relevant passages	Relevant to claim No.
Y	PEREIRA S ET AL: "Template based recovery of Fourier-based watermarks using log-polar and log-log maps" PROCEEDINGS OF ICMCS99, 7 June 1999 (1999-06-07), - 11 June 1999 (1999-06-11) pages 870-874, XP002270096 FLORENCE, ITALY ISBN: 0-7695-0253-9 abstract	2,4-6
A	FLETCHER P A ET AL: "Direct embedding and detection of RST invariant watermarks" INFORMATION HIDING. 5TH INTERNATIONAL WORKSHOP, IH 2002, 7 October 2002 (2002-10-07), - 9 October 2002 (2002-10-09) pages 129-144, XP0001188234 BERLIN, GERMANY ISBN: 3-540-00421-1 abstract * section 2.2 Homogeneous Functions *	1-3,8
A	LIN C -Y ET AL: "Rotation, scale, and translation resilient watermarking for images" IEEE TRANSACTIONS ON IMAGE PROCESSING, vol. 10, no. 5, May 2001 (2001-05), pages 767-782, XP002270097 USA ISSN: 1057-7149 abstract page 768, left-hand column, last paragraph - right-hand column, paragraph 1	1-3,5,7, 8
A	WO 02/065782 A (OOSTVEEN JOB CORNELIS ET AL) 22 August 2002 (2002-08-22) cited in the application abstract	1,7,8

1

Form PCT/ISA/210 (continuation of second sheet) (July 1992)

INTERNATIONAL SEARCH REPORT

International Application No
PCT/IB 03/04894

Patent document cited in search report	Publication date	Patent family member(s)	Publication date
WO 02065782 A	22-08-2002	CN 1461565 T	10-12-2003
		EP 1362485 A1	19-11-2003
		WO 02065782 A1	22-08-2002
		US 2002178410 A1	28-11-2002

Form PCT/ISA/210 (patent family annex) (July 1992)

(12) INTERNATIONAL APPLICATION PUBLISHED UNDER THE PATENT COOPERATION TREATY (PCT)

(19) World Intellectual Property Organization
International Bureau

(43) International Publication Date
10 September 2004 (10.09.2004)

PCT

(10) International Publication Number
WO 2004/077430 A1

(51) International Patent Classification[7]: G11B 20/00, G06T 1/00

(21) International Application Number: PCT/IB2004/050120

(22) International Filing Date: 18 February 2004 (18.02.2004)

(25) Filing Language: English

(26) Publication Language: English

(30) Priority Data:
03100461.7 26 February 2003 (26.02.2003) EP

(71) Applicant (*for all designated States except US*): **KONINKLIJKE PHILIPS ELECTRONICS N.V.** [NL/NL]; Groenewoudseweg 1, NL-5621 BA Eindhoven (NL).

(72) Inventors; and
(75) Inventors/Applicants (*for US only*): **HAITSMA, Jaap, A.** [NL/NL]; c/o Prof. Holstlaan 6, NL-5656 AA Eindhoven (NL). **TALSTRA, Johan, C.** [NL/NL]; c/o Prof. Holstlaan 6, NL-5656 AA Eindhoven (NL). **STARING, Antonius, A., M.** [NL/NL]; c/o Prof. Holstlaan 6, NL-5656 AA Eindhoven (NL). **KALKER, Antonius, A., C., M.** [NL/NL]; c/o Prof. Holstlaan 6, NL-5656 AA Eindhoven (NL).

(74) Agent: **SCHMITZ, Herman, J., R.**; Prof. Holstlaan 6, NL-5656 AA Eindhoven (NL).

(81) Designated States (*unless otherwise indicated, for every kind of national protection available*): AE, AG, AL, AM, AT, AU, AZ, BA, BB, BG, BR, BW, BY, BZ, CA, CH, CN, CO, CR, CU, CZ, DE, DK, DM, DZ, EC, EE, EG, ES, FI, GB, GD, GE, GH, GM, HR, HU, ID, IL, IN, IS, JP, KE, KG, KP, KR, KZ, LC, LK, LR, LS, LT, LU, LV, MA, MD,

[Continued on next page]

(54) Title: HANDLING OF DIGITAL SILENCE IN AUDIO FINGERPRINTING

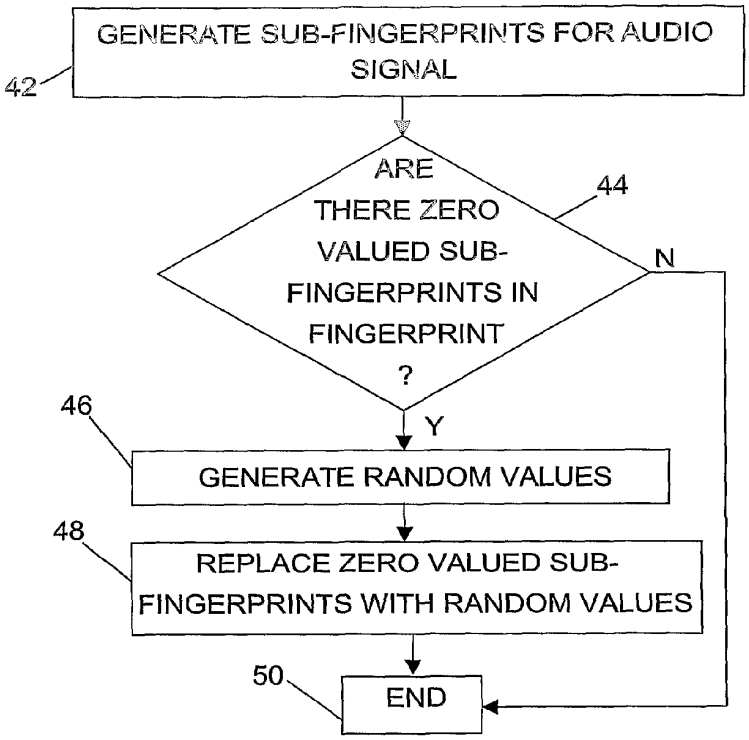

(57) Abstract: The invention relates to a method, a device, a client-server system as well as a computer program product and computer program element for handling digital silence when fingerprinting digital media signals. A fingerprint comprising a number of sub-fingerprints for at least a part of the digital media signal is generated, (step 42), and the influence of at least one piece of the media signal on the fingerprint is removed or changed, (step 48), which piece corresponds to digital silence. The invention in a reliable way avoids a wrong identification of media signals, such as audio signals, where digital silence is included. The invention is also easy to implement by only requiring some of the functionalities already provided in a computer.

WO 2004/077430 A1

MG, MK, MN, MW, MX, MZ, NA, NI, NO, NZ, OM, PG, PH, PL, PT, RO, RU, SC, SD, SE, SG, SK, SL, SY, TJ, TM, TN, TR, TT, TZ, UA, UG, US, UZ, VC, VN, YU, ZA, ZM, ZW.

(84) Designated States *(unless otherwise indicated, for every kind of regional protection available)*: ARIPO (BW, GH, GM, KE, LS, MW, MZ, SD, SL, SZ, TZ, UG, ZM, ZW), Eurasian (AM, AZ, BY, KG, KZ, MD, RU, TJ, TM), European (AT, BE, BG, CH, CY, CZ, DE, DK, EE, ES, FI, FR, GB, GR, HU, IE, IT, LU, MC, NL, PT, RO, SE, SI, SK, TR), OAPI (BF, BJ, CF, CG, CI, CM, GA, GN, GQ, GW, ML, MR, NE, SN, TD, TG).

Declaration under Rule 4.17:

— *as to applicant's entitlement to apply for and be granted a patent (Rule 4.17(ii)) for the following designations AE, AG, AL, AM, AT, AU, AZ, BA, BB, BG, BR, BW, BY, BZ, CA, CH, CN, CO, CR, CU, CZ, DE, DK, DM, DZ, EC, EE, EG, ES, FI, GB, GD, GE, GH, GM, HR, HU, ID, IL, IN, IS, JP, KE, KG, KP, KR, KZ, LC, LK, LR, LS, LT, LU, LV, MA, MD, MG, MK, MN, MW, MX, MZ, NA, NI, NO, NZ, OM, PG, PH, PL, PT, RO, RU, SC, SD, SE, SG, SK, SL, SY, TJ, TM, TN, TR, TT, TZ, UA, UG, UZ, VC, VN, YU, ZA, ZM, ZW, ARIPO patent (BW, GH, GM, KE, LS, MW, MZ, SD, SL, SZ, TZ, UG, ZM, ZW), Eurasian patent (AM, AZ, BY, KG, KZ, MD, RU, TJ, TM), European patent (AT, BE, BG, CH, CY, CZ, DE, DK, EE, ES, FI, FR, GB, GR, HU, IE, IT, LU, MC, NL, PT, RO, SE, SI, SK, TR), OAPI patent (BF, BJ, CF, CG, CI, CM, GA, GN, GQ, GW, ML, MR, NE, SN, TD, TG)*

Published:

— *with international search report*

For two-letter codes and other abbreviations, refer to the "Guidance Notes on Codes and Abbreviations" appearing at the beginning of each regular issue of the PCT Gazette.

Handling of digital silence in audio fingerprinting

TECHNICAL FIELD

The present invention generally relates to the field of fingerprinting of digital media signals, such as audio and more particularly to the generation of fingerprints when a part of the digital media signal includes digital silence.

DESCRIPTION OF RELATED ART

It is known to provide fingerprints for media signals such as audio signals in order to identify a certain piece of music. A local computer then generates a fingerprint for an audio signal and sends this fingerprint as a query to a database. In the database the fingerprint is compared with other fingerprints and if a match is found, it is returned to the local computer, which then has received an identification of the audio signal.

Such fingerprinting is useful in many applications, for instance in radio stations for identifying play lists, but there is also a growing market for private persons wanting to buy music after having identified it, for instance on the radio.

One such fingerprinting scheme is described in "A Highly Robust Audio Fingerprinting System", by Jaap Haitsma and Ton Kalker, Ismir, October 2002, where fingerprints are made up by a number of sub-fingerprints. A sub-fingerprint is based on a part of the media signal. 256 consecutive sub-fingerprints, which we will refer to as the fingerprint or fingerprint block, are computed during a short time interval in order to provide a fast and safe identification of the media signal. A fingerprint can therefore be taken on for example the first three seconds of a media signal. A positive identification is made in a fingerprint database based if the Hamming distance between the derived fingerprint and a fingerprint in the database is below a certain threshold.

A problem of the known fingerprinting schemes that often the media signal can have parts that are made up of digital silence. An audio clip might for instance start with silence, where for instance the PCM sample has a value of zero, and a video clip can start with a number of black frames. This means that sub-fingerprints made in the beginning during this digital silence, will be identical and reflect that no information is present. Since a

lot of different media signals or files can have this digital silence in the beginning, it is possible that a query with a fingerprint made on the beginning would be found to wrongly correspond to several different stored media signals in the database.

SUMMARY OF THE INVENTION

It is thus an object of the present invention to provide fingerprinting where the effects of digital silence in a media signal are removed such that fingerprinting can be used with a diminished risk of identifying the wrong media signal.

According to a first aspect of the present invention, this object is achieved by a method of handling digital silence when fingerprinting a digital media signal comprising the steps of:

generating a fingerprint comprising a number of sub-fingerprints for at least a part of the digital media signal, and

removing or changing the influence of at least one piece of the media signal on the fingerprint, which piece corresponds to digital silence.

According to a second aspect of the present invention, this object is also achieved by a device for handling digital silence when fingerprinting digital media signals and comprising:

a fingerprint generating unit arranged to generate a fingerprint comprising a number of sub-fingerprints for at least parts of a digital media signal, and

a digital silence removal unit arranged to remove or change the influence of at least one piece of the media signal on the fingerprint, which piece corresponds to digital silence.

According to a third aspect of the present invention, this object is furthermore achieved by a system of devices for handling digital silence when fingerprinting digital media signals and comprising:

a server device having a database of fingerprints related to media signals stored as media files, and

a client device for generating fingerprint queries to the server device, wherein at least one of client and server device comprises:

a fingerprint generating unit arranged to generate a number of sub-fingerprints for at least parts of a digital media signal, and

a silence removal unit arranged to remove or change the influence of at least one piece of the media signal on the fingerprinting, which piece corresponds to digital silence.

According to a fourth aspect of the present invention, this object is also achieved by a computer program product for handling digital silence when fingerprinting digital media signals, to be used on a computer, comprising a computer readable medium having thereon:

computer program code means, to make the computer execute, when said program is loaded in the computer:

generate a number of sub-fingerprints for at least parts of a digital media signal, and

remove or change the influence of at least one piece of the media signal on the fingerprint, which piece corresponds to digital silence.

According to a fifth aspect of the present invention, this object is also achieved by a computer program element for handling digital silence when fingerprinting digital media signals, to be used on a computer, said computer program element comprising:
computer program code means, to make the computer execute, when said program is loaded in the computer:

generate a number of sub-fingerprints for at least parts of a digital media signal, and

remove or change the influence of at least one piece of the media signal on the fingerprint, which piece corresponds to digital silence.

Claims 2 and 3 are directed towards removing the cause for digital silence.

Claim 4 is directed towards adding random values to the whole media signal.

Claims 5 and 16 are directed towards providing random values for changing the influence of digital silence.

Claims 6 and 17 are directed towards replacing sub-fingerprints representing digital silence with random values.

Claims 7 and 18 are directed towards replacing samples of the media signal representing digital silence with random values.

Claim 8 is directed towards providing different types of random number generations in a client and a server device.

Claims 10 and 19 are directed towards processing the random number with time and date information related to the generation of a fingerprint for lowering the probability of false identifications of media signals.

The present invention has the advantage of in a reliable way avoiding a wrong identification of media signals in which digital silence is included. It is also easy to implement by only requiring some of the functionalities already provided in a computer. In a variation of the invention it also guarantees that random numbers generated almost certainly do not generate false identifications.

The general idea behind the invention is thus to remove digital silence related to media signals or to replace it with random values when generating fingerprints for the media signal.

The expression digital silence is intended to comprise digital audio signals where the information in the signal represents no sound or sound below a certain low threshold where different valued sub-fingerprints are not possible to generate as well as digital video information where the information in the frames represents black or is below a certain threshold in which no images are discernible.

These and other aspects of the invention will be apparent from and elucidated with reference to the embodiments described hereinafter.

BRIEF DESCRIPTION OF THE DRAWINGS

The present invention will now be explained in more detail in relation to the enclosed drawings, where

Fig 1 shows a block schematic of a device for generating fingerprints together with a database of fingerprints,

Fig. 2 schematically shows a client device connected to a server device via a network

Fig. 3 shows a block schematic of a device for handling digital silence according to the invention,

Fig. 4 shows a flow chart of a method of handling digital silence according to a first embodiment of the invention,

Fig. 5 shows a flow chart of a method of handling digital silence according to a second embodiment of the invention,

Fig. 6 shows a block schematic of a first variation of a random number generating unit in the device in fig. 3,

Fig. 7 shows a second variation of a random number generating unit for a device for handling digital silence according to the invention, and

Fig. 8 shows an optical disc on which program code for performing the invention is stored.

DETAILED DESCRIPTION OF EMBODIMENTS

The present invention relates to the field of providing fingerprints for digital media signals and will in the following be described in relation to fingerprinting of audio signals. It is however not limited to audio but can be applied for other media signals like for instance video.

Fig. 1 shows a block schematic of a fingerprinting device 10 or fingerprint generating unit connected to a database 21 and arranged to generate sub-fingerprints based on an audio signal. The fingerprinting device 10 in fig. 1 is intended to be provided in a client device which can communicate with a server, which includes the database. A client can contact this database in order to identify an audio signal via a fingerprint. In order to generate a fingerprint, the fingerprinting device 10 receives an audio signal at a downsampler 11, which downsamples the audio signal. The downsampled audio signal is then forwarded from the downsampler to a framing circuit 12, which divides the audio signal into (preferably overlapping) frames, which are weighted by a Hanning window. The thus framed audio signal is then forwarded to a Fourier transform circuit 13, which computes spectral representations of every frame. In a following block 14, absolute values of the Fourier coefficients are calculated. The device also includes a band division stage 15, which divides the frequency spectrum into a number of bands and includes a number of selectors 151, which selects the Fourier coefficients of the respective band. To this band division stage 15 is connected an energy computing stage 16, which has a stage 161 for each band. The stage 16 computes the energy of the magnitudes of the Fourier coefficients of the respective bands. A bit derivation circuit 17 is connected to the energy computing stage 16. The bit derivation circuit 17 converts the energy levels of each band into bits and is for this purpose provided with a first subtractor 171, a frame delay 172, a second subtractor 173 and a comparator 174 for each band. The resulting sub-fingerprints of all successive frames are stored in a buffer 18 as a fingerprint. The fingerprinting device also includes a bit reliability determining circuit

19, which determines the reliability of the bits in the fingerprint. The fingerprint in the buffer 18 and the bit reliability information from the bit reliability determining circuit 19 are sent from the device 10 to a computer 20 provided in the server. The database 21 connected to the computer 20 has a number of stored fingerprints all comprising sub-fingerprints for a large number of audio signals or songs. In fig. 1 there is also shown a look-up table 22 and, which the computer 20 uses when searching for a matching fingerprint in the database 21, which matching fingerprint corresponds to a fingerprint received from the device 10.

One difference between the fingerprints in client and server is that the database includes fingerprints for whole audio signals, whereas a client normally only generates one or a few fingerprints for an audio signal. The functioning of the device shown in fig. 1 and the generation of fingerprints as well as how matching of fingerprints is being performed is described in more detail in the document "A Highly Robust Audio Fingerprinting System", by Jaap Haitsma and Ton Kalker, Ismir, October 2002 , which is herein incorporated by reference.

Fig. 2 shows a client device 24 connected to a server device 26 via a computer network 28, like the Internet. The client device 24 thus generates a fingerprint generated in the above-described way and sends this together with bit-reliability information as a query to the server 26 for audio signals in need of identification. The server 26 looks in the database and returns information about the audio signal to the client after searching in the database. The returned information is normally metadata like name of song, artist etc. When doing this identification the server compares the sub-fingerprints in a fingerprint with the sub-fingerprints of audio signals stored in the database and returns a positive identification, when the Hamming distance between two fingerprints are found to be below a certain threshold.

In the device described above identification of a piece of audio can be made quickly based on a fingerprint corresponding to approximately 3 seconds and containing 256 sub-fingerprints. This can however lead to some problems, which this invention will solve. Many audio signals or clips may start with silence, which can be a few seconds long. Many audio signals will therefore include information, which actually represents silence. This means that there can be several audio signals all of which are also started with silence that can be found to correspond to an audio file for which a fingerprint is taken. There is thus a need for taking care of this silence. In case of video this would correspond to a number of black frames at the beginning.

A device for handling digital silence 30 according to the invention is shown in a block schematic in fig. 3. The device 30 includes a control unit 32 arranged to be connected

to the buffer 18 of the fingerprinting device shown in fig. 1 and a random number generating unit 34 connected to the control unit 30.

The functioning of the units in fig. 3 will now be described for use in a client device together with fig. 4, which shows a flow chart of a first embodiment of a method according to the invention. The client device first generates a number of sub-fingerprints for an audio signal in a fingerprinting device, step 42, which sub-fingerprints are stored in the register 18. The control unit 32 of the device 30 fetches these sub-fingerprints from the register 18 and investigates if any of these sub-fingerprints have zero values, i.e., correspond to digital silence in case of the described fingerprinting algorithm, step 44. If not any of them do, the sub-fingerprints are kept unchanged in the register and then the investigation is ended, step 50. If they do include zero values, the control unit 32 contacts the random number generating unit 34, which generates random values, step 46. These random values are then submitted to the control unit 32, which replaces the zero valued sub-fingerprints with these random values in the sub-fingerprint register 18, whereupon the investigation is ended, step 50. When the client device later sends a query including a fingerprint where zero valued sub-fingerprints have been replaced by these random values to the server, the probability of finding a match in the database is very low, which avoids the return of a wrong match of the audio signal. If the client device has to make a positive identification it has to send another query later, when the audio signal is not silent, and then a positive identification can be made.

The device 30 can as an alternative be provided on the input side of the client device, i.e. before sub-fingerprints are generated. In this case the control unit 32 will be connected to a register where the actual audio signal is temporarily stored before being subject to fingerprinting. A method according to an alternative embodiment of the invention will now be described with reference being made to fig. 5, showing a flow chart of a method according to this second embodiment. First the samples of the audio signal, which can consist of a number of PCM samples, are analysed by the control unit, step 52, for determining if there are any zero samples present or rather if there are samples that are beneath a certain lowest level, which would result in a sub-fingerprint of zero, step 54. If there are, the random number generator is made to generate random numbers, step 56. Thereafter the control unit 32 replaces the zero valued PCM samples or rather the samples under said threshold with the random values, step 58. Thereafter the samples of the audio signal are submitted to the fingerprinting device for generation of sub-fingerprints in the known way, step 60. Since the zero level samples of the audio signal have already been replaced, the sub-fingerprints subsequently generated for theses samples will likewise be random in nature and therefore a

match for silent parts of the audio signal in the database is less likely. In case there are no zero values samples, step 54, fingerprinting generation is performed directly, step 60.

There are some other possible variations to the above-described scheme. One variation of the alternative embodiment of the invention is to add a small piece of random noise to all samples of the audio signal before a fingerprint is generated, i.e. also to the samples not corresponding to silence. It is furthermore possible to remove the digital silence from either the digital samples before fingerprinting is performed or to remove the sub-fingerprints, which correspond to digital silence instead of replacing them with random numbers. When this is done it is however not guaranteed that the spacing between subsequent sub-fingerprints are 11,8 ms apart. Then there is a risk that low-amplitude noise which can be added to a radio broadcast audio signal instead of silence will be a part of the fingerprint sent to a database. If the database has the corresponding silence removed, this will lead to a less than optimal match.

The unit in Fig. 3 can just as well be provided together with a fingerprinting device in the server as in the client, either before the fingerprinting device or after, as was described above. This ensures that the database will not have any sub-fingerprints having a zero value for a fingerprint of a piece of audio, but these are replaced by random words. Digital silence can also be removed in the server in the same way as was described in the paragraph above, by removing the digital silence samples or the sub-fingerprints corresponding to digital silence.

The sub-fingerprints generated are of 32 bits and a sub-fingerprints corresponding to silence is then the hexadecimal value 0x00000000. It is convenient to use a standard linear congruential random number generator for generating 32 bit random words to use for replacing the zero sub-fingerprints. The random number generator is initialised with a random number X_0. Subsequent random numbers are obtained according to equation (1) below.

$$X_{N+1} = (1664525 * X_N + 1013904223) \bmod 2^{32} \qquad (1)$$

There is however a problem with the use of this method in case both the client and the server have fingerprints where this same type of random number generator has been used. Since the only real random number is the first number and all subsequent random numbers are computed in a known way from this first random number, there is a risk that both the devices will end up with the same random numbers for digital silence. This could

lead to a matching of the fingerprint in the database based on the sequence of "random" sub-fingerprints for silence. If the database has about 1 million songs this risk is at least 1/4000 or 0,025%. In fact the risk is even higher than this because of the risk of matching between sub-fingerprints in a query and database provided in different positions in the fingerprint.

One way to solve this problem is to have different random number generating schemes for client and server. This would lead to different implementations of database and fingerprint query generation in server and client. Another solution to this problem will be described in relation to fig. 6 below.

Fig. 6 shows a first variation of a random generating unit 34, which includes a standard linear congruential random number generator 36 connected to a first input of a logical unit 40, which in this case is a logical Exclusive-OR unit 40. The logical unit 40 receives a value $V(t_{SYS})$ on a second input, which value is a 32-bit value that is dependent on the date and time of the generation of the fingerprint. The value $V(t_{SYS})$ is dependent on the system time of the computer where the random number generator is provided. This makes the subsequent random values not only dependent on the first random value but also on the current system time and date.

The probability for these values to correspond to digital silence in both the client and the server are therefore reduced significantly.

One variation of this latter unit is shown in Fig. 7. Fig. 7 shows a Linear Feedback Shift Register circuit 62 which is used for generation of random bits. The unit includes a number of tapped delay lines τ, 64 – 72. The delays are connected in series and the last 72 is connected to the output 94 of the random number generating unit 62. A multiplying unit g_1 82, g_2 84, … g_{29} 78, g_{30} 76 and g_{31} 74 is provided between each delay unit. The multiplication factor can be either 1 or 0. Each multiplying unit is connected to a corresponding adding unit 84 – 92, of which a last 92 is also connected directly to the output 94 and a first 84 is connected to the input of the first delay unit 64. In order to produce 32 bit random numbers one needs 32 of these Linear Feedback Registers. Each of the 32 LFSR's is initialised with a different 32-bit number derived from the computer system time. Every LSFR generates 1 random bit. Since every LFSR is initialised with a 32 bit number that depends on the system time, the cycle of this implementation also depends on the system time.

The present invention is preferably provided with one or more processors with associated program memory in which the program code for performing the method according to the invention is stored. The program code can also be provided in the form of a data

carrier, like a CD Rom disk 96 as is shown in fig. 8. The program code can also be downloaded to a device from a server via a network, like the one shown in fig. 2.

The present invention has several advantages. It avoids the wrong identification of media signals in which digital silence is included in a reliable way. It is also easy to implement since it uses some of the functionality already provided in a computer. In a variation of the invention it also guarantees that random numbers generated almost certainly do not generate false identifications.

The present invention has been described in relation to computers in a computer system. However, it is not limited to this, but can be implemented in other types of environments for instance like in a mobile phone communicating with a server via a cellular network. A mobile phone can also be made to communicate with a computer that is a client device connecting to a server including the above-mentioned database. The invention is furthermore not limited to the described fingerprinting scheme, but can be implemented in any fingerprinting scheme that has to be capable to handle digital silence. The invention was described in relation to PCM samples. It should be realised that it is also applicable when different types of compression and coding are used, like MP3-coding as well as for other types of media signals like video Therefore the present invention is only to be limited by the following claims.

In summary, the invention relates to a method, a device, a client-server system as well as a computer program product and computer program element for handling digital silence when fingerprinting digital media signals. A fingerprint comprising a number of sub-fingerprints for at least a part of the digital media signal is generated, (step 42), and the influence of at least one piece of the media signal on the fingerprint is removed or changed, (step 48), which piece corresponds to digital silence. The invention in a reliable way avoids a wrong identification of media signals, such as audio signals, where digital silence is included. The invention is also easy to implement by only requiring some of the functionalities already provided in a computer.

CLAIMS:

1. Method of handling digital silence when fingerprinting a digital media signal comprising the steps of:

generating a fingerprint comprising a number of sub-fingerprints for at least a part of the digital media signal, (step 42; 60) and

removing or changing the influence of at least one piece of the media signal on the fingerprint, (step 48; 58), which piece corresponds to digital silence.

2. Method according to claim 1, wherein the step of removing or changing the influence comprises removing the piece of the digital media signal before generating a fingerprint.

3. Method according to claim 1, wherein the step of removing or changing the influence comprises removing a sub-fingerprints from the fingerprint having a value corresponding to digital silence of said piece of the media signal.

4. Method according to claim 1, wherein the step of removing or changing the influence comprises providing a random value for said piece of the media signal corresponding to digital silence.

5. Method according to claim 4, wherein the step of providing a random value comprises adding a random value to each piece of the media signal.

6. Method according to claim 4, wherein the step of providing a random value comprises substituting a sub-fingerprint having a value corresponding to digital silence in the media signal with a random value, (step 48).

7. Method according to claim 4, wherein the step of providing a random value comprises substituting a piece of the media signal corresponding to digital silence with a piece corresponding to random noise before starting generation of a fingerprint, (step 58).

8. Method according to claim 4, wherein the method is performed in a first device (24) and the way random values are generated in the first device differs from the way random values are generated in a second device (26), with which the first device is communicating in order to identify a media signal.

9. Method according to claim 4, wherein the step of providing a random value comprises generating a random value using a random number generator.

10. Method according to claim 9, further including the step of processing the random value with additional information that is dependent on time and date information related to the generation of the fingerprint.

11. Method according to claim 10, wherein the step of processing comprises performing and exclusive-or operation on the random value and the additional information.

12. Method according to claim 10, wherein the processing is provided through a number of linear feedback shift registers.

13. Method according to claim 1 further including the step of transferring the fingerprint to a server for matching against a fingerprint database.

14. Method according to claim 1, further including the step of storing the fingerprint in a server fingerprint database to be used for matching against fingerprints received from client devices.

15. Device (24; 26) for handling digital silence when fingerprinting digital media signals and comprising:

a fingerprint generating unit (10) arranged to generate a fingerprint comprising a number of sub-fingerprints for at least parts of a digital media signal, and

a digital silence removal unit (30) arranged to remove or change the influence of at least one piece of the media signal on the fingerprint, which piece corresponds to digital silence.

16. Device according to claim 15, wherein the silence removal unit (30) includes a random number generating unit (34; 62) for generating a random value for the piece of the media signal corresponding to digital silence.

17. Device according to claim 16, wherein the silence removal unit (30) is arranged to substitute a sub-fingerprint generated by the fingerprint generating unit having a value corresponding to digital silence in the media signal with a random value.

18. Device according to claim 16, wherein the silence removal unit (30) is arranged to substitute the piece of the media signal corresponding to digital silence with a piece corresponding to random noise before submission to the fingerprint generating unit for generating a fingerprint.

19. Device according to claim 16, further including a logical function unit (40) arranged to process the random value with additional information that is dependent on time and date information related to the generation of the fingerprint.

20. Device according to claim 19, wherein the logical function unit (40) is an exclusive-or unit.

21. Device according to claim 16, wherein the random number generating unit (62) is provided as a number of linear feedback shift registers.

22. Device according to claim 15, wherein the device is a client device (24) arranged to generate fingerprint queries to a server device (26) including a database (21) of fingerprints for a number of different media signals.

23. Device according to claim 15, wherein the device is provided in a server (26) including a database (21) of fingerprints for a number of different media signals used for communication with at least one client device (20).

24. System of devices for handling digital silence when fingerprinting digital media signals and comprising:

a server (26) device having a database (21) of fingerprints related to media signals stored as media files, and

a client device (24) for generating fingerprint queries to the server device, wherein at least one of client and server device comprises:

a fingerprint generating unit (10) arranged to generate a number of sub-fingerprints for at least parts of a digital media signal, and

a silence removal unit (30) arranged to remove or change the influence of at least one piece of the media signal on the fingerprinting, which piece corresponds to digital silence.

25. Computer program product for handling digital silence when fingerprinting digital media signals, to be used on a computer, comprising a computer readable medium (96) having thereon computer program code means, to make the computer execute, when said program is loaded in the computer:

generate a number of sub-fingerprint for at least parts of a digital media signal, and

remove or change the influence of at least one piece of the media signal on the fingerprint, which piece corresponds to digital silence.

26. Computer program element for handling digital silence when fingerprinting digital media signals, to be used on a computer, said computer program element comprising computer program code means, to make the computer execute, when said program is loaded in the computer:

generate a number of sub-fingerprints for at least parts of a digital media signal, and

remove or change the influence of at least one piece of the media signal on the fingerprint, which piece corresponds to digital silence.

1/5

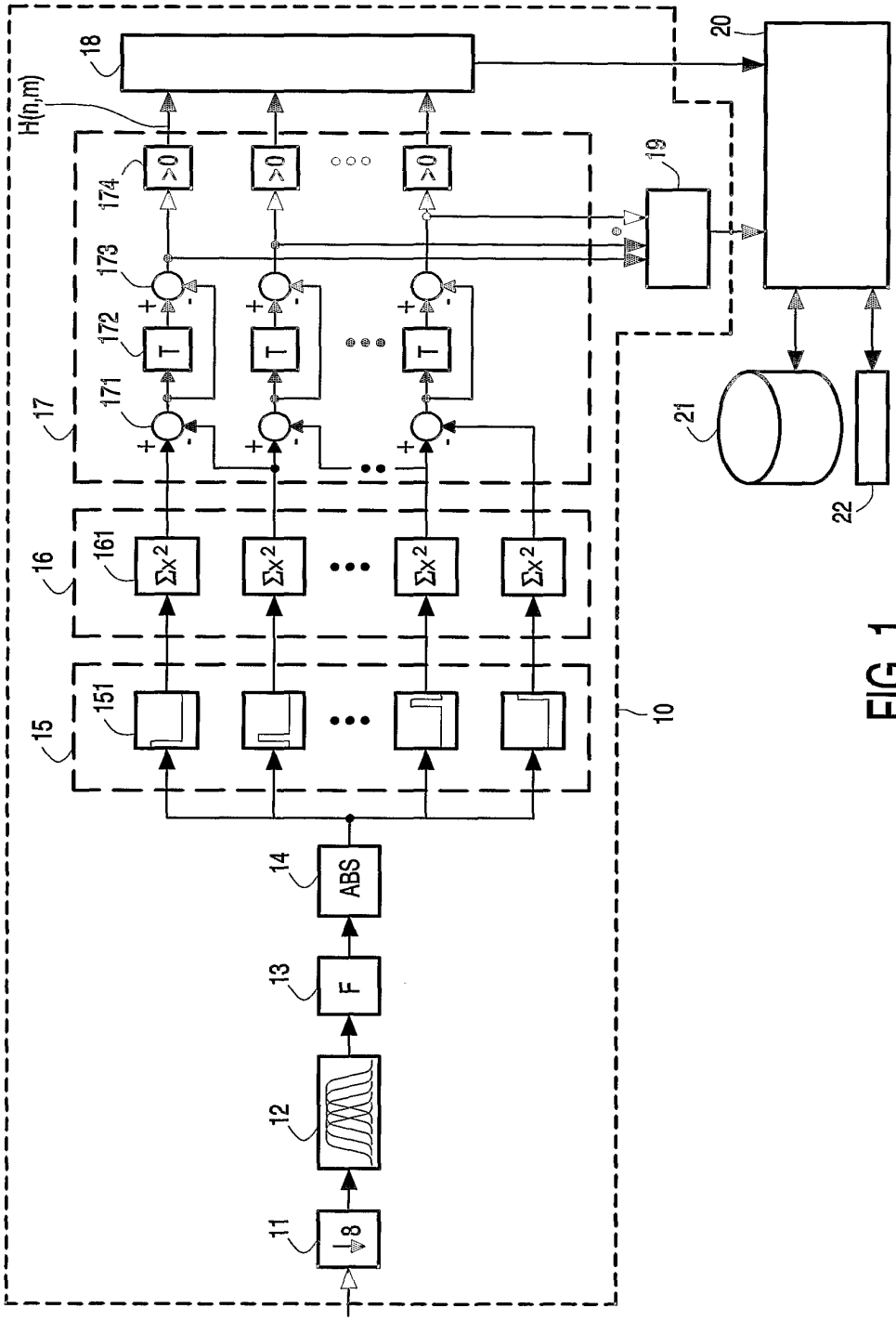
H(n,m)
18
20
19
174
173
172
171
17
16
161
15
151
10
14
ABS
13
F
12
11
21
22

FIG. 1

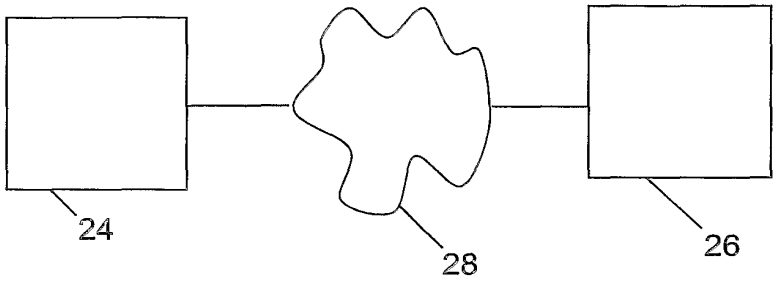

FIG.2

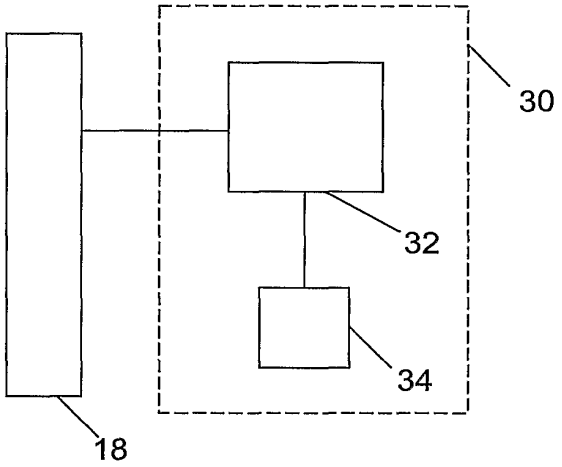

FIG.3

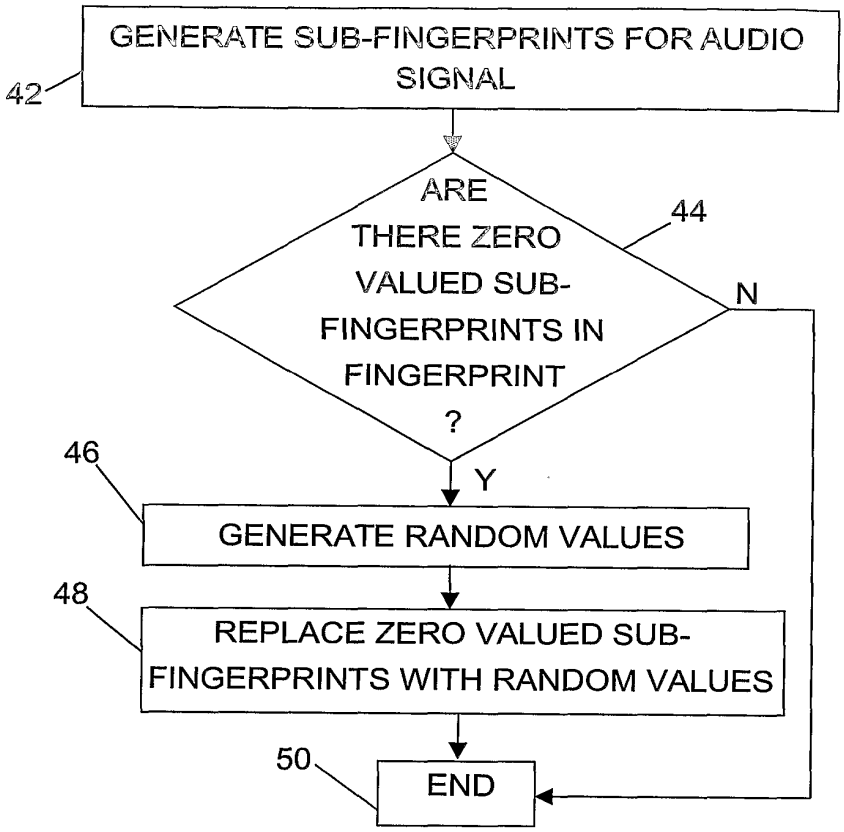
GENERATE SUB-FINGERPRINTS FOR AUDIO SIGNAL
42
ARE THERE ZERO VALUED SUB-FINGERPRINTS IN FINGERPRINT ?
44
N
Y
46
GENERATE RANDOM VALUES
48
REPLACE ZERO VALUED SUB-FINGERPRINTS WITH RANDOM VALUES
50
END

FIG.4

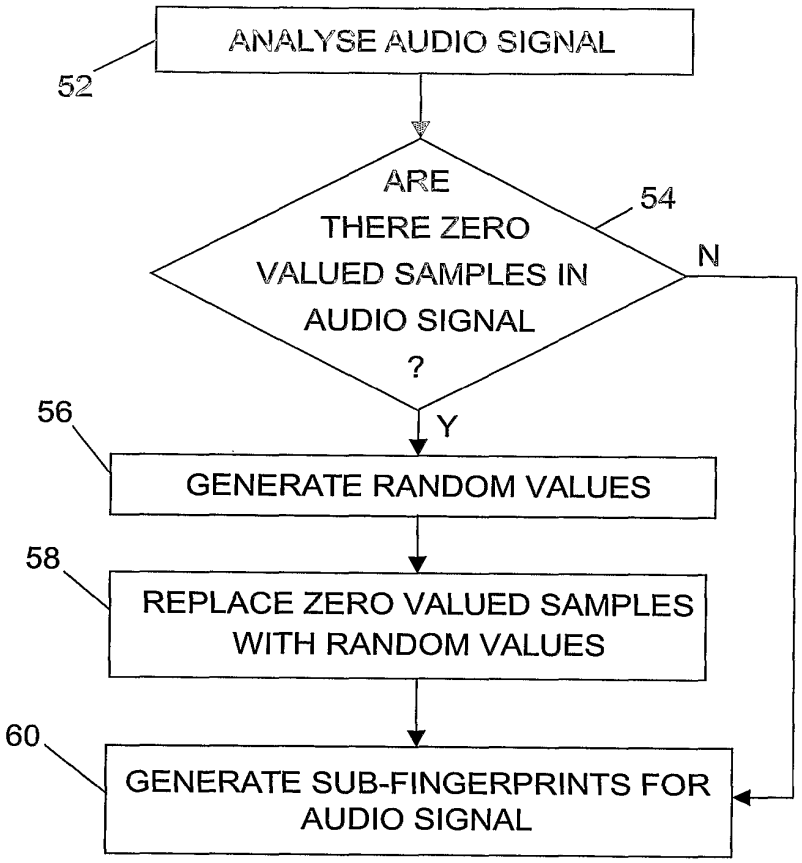
ANALYSE AUDIO SIGNAL
52
ARE THERE ZERO VALUED SAMPLES IN AUDIO SIGNAL ?
54
N
Y
56
GENERATE RANDOM VALUES
58
REPLACE ZERO VALUED SAMPLES WITH RANDOM VALUES
60
GENERATE SUB-FINGERPRINTS FOR AUDIO SIGNAL

FIG.5

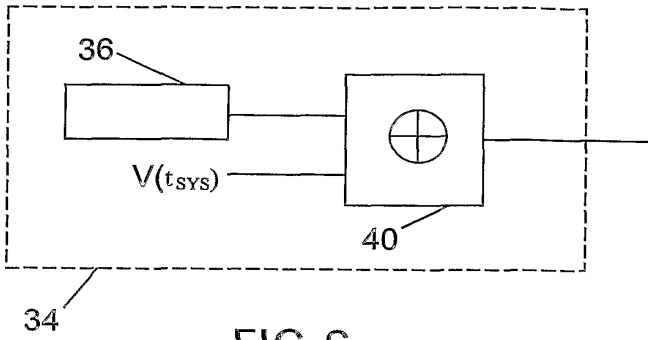

FIG.6

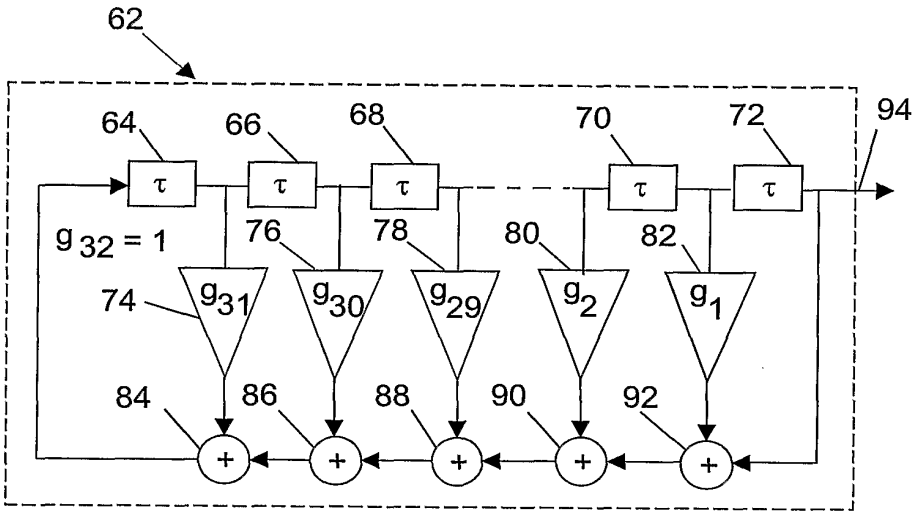

FIG.7

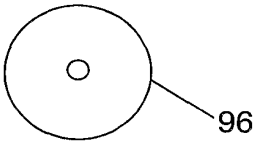

FIG.8

INTERNATIONAL SEARCH REPORT

International Application No
PCT/IB2004/050120

A. CLASSIFICATION OF SUBJECT MATTER
IPC 7 G11B20/00 G06T1/00

According to International Patent Classification (IPC) or to both national classification and IPC

B. FIELDS SEARCHED

Minimum documentation searched (classification system followed by classification symbols)
IPC 7 G11B G06T

Documentation searched other than minimum documentation to the extent that such documents are included in the fields searched

Electronic data base consulted during the international search (name of data base and, where practical, search terms used)

EPO-Internal, PAJ, WPI Data, INSPEC

C. DOCUMENTS CONSIDERED TO BE RELEVANT

Category °	Citation of document, with indication, where appropriate, of the relevant passages	Relevant to claim No.
Y	HAITSMA ET AL: "Robust Audio Hashing for Content Identification" PROCEEDINGS INTERNATIONAL WORKSHOP ON CONTENT-BASED MULTIMEDIA INDEXING, XX, XX, 19 September 2001 (2001-09-19), pages 1-8, XP002198245 page 3 - page 7 ----- -/--	1-26

[X] Further documents are listed in the continuation of box C.

[ ] Patent family members are listed in annex.

° Special categories of cited documents :

"A" document defining the general state of the art which is not considered to be of particular relevance
"E" earlier document but published on or after the international filing date
"L" document which may throw doubts on priority claim(s) or which is cited to establish the publication date of another citation or other special reason (as specified)
"O" document referring to an oral disclosure, use, exhibition or other means
"P" document published prior to the international filing date but later than the priority date claimed

"T" later document published after the international filing date or priority date and not in conflict with the application but cited to understand the principle or theory underlying the invention
"X" document of particular relevance; the claimed invention cannot be considered novel or cannot be considered to involve an inventive step when the document is taken alone
"Y" document of particular relevance; the claimed invention cannot be considered to involve an inventive step when the document is combined with one or more other such documents, such combination being obvious to a person skilled in the art.
"&" document member of the same patent family

Date of the actual completion of the international search	Date of mailing of the international search report
11 May 2004	03/06/2004
Name and mailing address of the ISA European Patent Office, P.B. 5818 Patentlaan 2 NL – 2280 HV Rijswijk Tel. (+31–70) 340–2040, Tx. 31 651 epo nl, Fax: (+31–70) 340–3016	Authorized officer Rydyger, K

Form PCT/ISA/210 (second sheet) (January 2004)

INTERNATIONAL SEARCH REPORT

Ir ional Application No
PCT/IB2004/050120

C.(Continuation) DOCUMENTS CONSIDERED TO BE RELEVANT

Category °	Citation of document, with indication, where appropriate, of the relevant passages	Relevant to claim No.
Y	JAAP HAITSMA, TON KALKER: "A highly robust audio fingerprinting system"'Online! 17 October 2002 (2002-10-17), XP002278848 Retrieved from the Internet: URL:http://ismir2002.ismir.net/proceedings /02-FP04-2.pdf> 'retrieved on 2004-05-03! cited in the application page 3, column 2, line 53 - page 4, column 2, last line page 6, column 1, line 20 - page 8 -----	1-26
A	NEUSCHMIED H ET AL: "Content-based identification of audio titles on the internet" CONFERENCE PROCEEDINGS ARTICLE, 23 November 2001 (2001-11-23), pages 100-104, XP010582771 the whole document -----	1-26
A	BRUCE SCHNEIER: "Applied Cryptography" 1996, JOHN WILEY & SONS , NEW YORK, US , XP002278913 page 372 - page 379 -----	9,12,17, 21

Form PCT/ISA/210 (continuation of second sheet) (January 2004)

UNITED STATES PATENT AND TRADEMARK OFFICE

UNITED STATES DEPARTMENT OF COMMERCE
United States Patent and Trademark Office
Address: COMMISSIONER FOR PATENTS
P.O. Box 1450
Alexandria, Virginia 22313-1450
www.uspto.gov

APPLICATION NUMBER	FILING OR 371(C) DATE	FIRST NAMED APPLICANT	ATTY. DOCKET NO./TITLE
16/403,204	05/03/2019	Jonathan S. Steuer	10004-2000116

CONFIRMATION NO. 1048

POA ACCEPTANCE LETTER

51417
Mauriel Kapouytian Woods LLP
15 W. 26th Street
7th Floor
New York, NY 10010

OC000000108813048

Date Mailed: 06/12/2019

NOTICE OF ACCEPTANCE OF POWER OF ATTORNEY

This is in response to the Power of Attorney filed 06/07/2019.

The Power of Attorney in this application is accepted. Correspondence in this application will be mailed to the above address as provided by 37 CFR 1.33.

Questions about the contents of this notice and the requirements it sets forth should be directed to the Office of Data Management, Application Assistance Unit, at **(571) 272-4000** or **(571) 272-4200** or **1-888-786-0101**.

/mabebe/

PTO/SB/80 (11-08)
Approved for use through 11/30/2011 OMB 0651-0035
U.S. Patent and Trademark Office; U.S. DEPARTMENT OF COMMERCE
Under the Paperwork Reduction Act of 1995 no persons are required to respond to a collection of information unless it displays a valid OMB control number

POWER OF ATTORNEY TO PROSECUTE APPLICATIONS BEFORE THE USPTO

I hereby revoke all previous powers of attorney given in the application identified in the attached statement under 37 CFR 3.73(b).

I hereby appoint:

☑ Practitioners associated with the Customer Number: 51417

OR

☐ Practitioner(s) named below (if more than ten patent practitioners are to be named, then a customer number must be used):

Name	Registration Number	Name	Registration Number

as attorney(s) or agent(s) to represent the undersigned before the United States Patent and Trademark Office (USPTO) in connection with any and all patent applications assigned only to the undersigned according to the USPTO assignment records or assignment documents attached to this form in accordance with 37 CFR 3.73(b).

Please change the correspondence address for the application identified in the attached statement under 37 CFR 3.73(b) to:

☐ The address associated with Customer Number:

OR

☐ Firm or Individual Name			
Address			
City		State	Zip
Country			
Telephone		Email	

Assignee Name and Address:
Anonymous Media Research, LLC
72 E. 3rd St., Suite 1B, NY, NY 10003

A copy of this form, together with a statement under 37 CFR 3.73(b) (Form PTO/SB/96 or equivalent) is required to be filed in each application in which this form is used. The statement under 37 CFR 3.73(b) may be completed by one of the practitioners appointed in this form if the appointed practitioner is authorized to act on behalf of the assignee, and must identify the application in which this Power of Attorney is to be filed.

SIGNATURE of Assignee of Record

The individual whose signature and title is supplied below is authorized to act on behalf of the assignee

Signature		Date	1 DEC 2010
Name	Jonathan S. Steuer	Telephone	866 295 2666
Title	MANAGER & CEO		

This collection of information is required by 37 CFR 1.31, 1.32 and 1.33. The information is required to obtain or retain a benefit by the public which is to file (and by the USPTO to process) an application. Confidentiality is governed by 35 U.S.C. 122 and 37 CFR 1.11 and 1.14. This collection is estimated to take 3 minutes to complete, including gathering, preparing, and submitting the completed application form to the USPTO. Time will vary depending upon the individual case. Any comments on the amount of time you require to complete this form and/or suggestions for reducing this burden, should be sent to the Chief Information Officer, U.S. Patent and Trademark Office, U.S. Department of Commerce, P.O. Box 1450, Alexandria, VA 22313-1450. DO NOT SEND FEES OR COMPLETED FORMS TO THIS ADDRESS. SEND TO: Commissioner for Patents, P.O. Box 1450, Alexandria, VA 22313-1450.

If you need assistance in completing the form, call 1-800-PTO-9199 and select option 2.

Electronic Acknowledgement Receipt

EFS ID:	36238404
Application Number:	16403204
International Application Number:	
Confirmation Number:	1048
Title of Invention:	MEDIA USAGE MONITORING AND MEASUREMENT SYSTEM AND METHOD
First Named Inventor/Applicant Name:	Jonathan S. Steuer
Customer Number:	51417
Filer:	Lawrence R. Gabuzda/Emily Sullenberger
Filer Authorized By:	Lawrence R. Gabuzda
Attorney Docket Number:	10004-2000116
Receipt Date:	07-JUN-2019
Filing Date:	03-MAY-2019
Time Stamp:	15:40:51
Application Type:	Utility under 35 USC 111(a)

Payment information:

Submitted with Payment	no

File Listing:

Document Number	Document Description	File Name	File Size(Bytes)/ Message Digest	Multi Part /.zip	Pages (if appl.)
1	Assignee showing of ownership per 37 CFR 3.73	10004-2000116Statement37CFR373c.pdf	1104981 46c709246e9c774362131dc1109c49a88cfc0802	no	2

Warnings:

Information:					
2	Power of Attorney	10004GPOA.pdf	1023249 a87b185aceee7d07a1a453bf180f388537f7e7e3	no	1
Warnings:					
Information:					
		Total Files Size (in bytes):	2128230		

This Acknowledgement Receipt evidences receipt on the noted date by the USPTO of the indicated documents, characterized by the applicant, and including page counts, where applicable. It serves as evidence of receipt similar to a Post Card, as described in MPEP 503.

New Applications Under 35 U.S.C. 111
If a new application is being filed and the application includes the necessary components for a filing date (see 37 CFR 1.53(b)-(d) and MPEP 506), a Filing Receipt (37 CFR 1.54) will be issued in due course and the date shown on this Acknowledgement Receipt will establish the filing date of the application.
National Stage of an International Application under 35 U.S.C. 371
If a timely submission to enter the national stage of an international application is compliant with the conditions of 35 U.S.C. 371 and other applicable requirements a Form PCT/DO/EO/903 indicating acceptance of the application as a national stage submission under 35 U.S.C. 371 will be issued in addition to the Filing Receipt, in due course.
New International Application Filed with the USPTO as a Receiving Office
If a new international application is being filed and the international application includes the necessary components for an international filing date (see PCT Article 11 and MPEP 1810), a Notification of the International Application Number and of the International Filing Date (Form PCT/RO/105) will be issued in due course, subject to prescriptions concerning national security, and the date shown on this Acknowledgement Receipt will establish the international filing date of the application.

PTO/AIA/96 (08-12)
Approved for use through 01/31/2013. OMB 0651-0031
U.S. Patent and Trademark Office; U.S. DEPARTMENT OF COMMERCE
Under the Paperwork Reduction Act of 1995, no persons are required to respond to a collection of information unless it displays a valid OMB control number.

STATEMENT UNDER 37 CFR 3.73(c)

Applicant/Patent Owner: Anonymous Media Research LLC

Application No./Patent No.: 16/403,204 Filed/Issue Date: May 3, 2019

Titled: MEDIA USAGE MONITORING AND MEASUREMENT SYSTEM AND METHOD

Anonymous Media Research LLC, a limited liability corporation

(Name of Assignee) (Type of Assignee, e.g., corporation, partnership, university, government agency, etc.)

states that, for the patent application/patent identified above, it is (choose one of options 1, 2, 3 or 4 below):

1. ☑ The assignee of the entire right, title, and interest.

2. ☐ An assignee of less than the entire right, title, and interest (check applicable box):

☐ The extent (by percentage) of its ownership interest is _____%. Additional Statement(s) by the owners holding the balance of the interest must be submitted to account for 100% of the ownership interest.

☐ There are unspecified percentages of ownership. The other parties, including inventors, who together own the entire right, title and interest are:

Additional Statement(s) by the owner(s) holding the balance of the interest must be submitted to account for the entire right, title, and interest.

3. ☐ The assignee of an undivided interest in the entirety (a complete assignment from one of the joint inventors was made). The other parties, including inventors, who together own the entire right, title, and interest are:

Additional Statement(s) by the owner(s) holding the balance of the interest must be submitted to account for the entire right, title, and interest.

4. ☐ The recipient, via a court proceeding or the like (*e.g.*, bankruptcy, probate), of an undivided interest in the entirety (a complete transfer of ownership interest was made). The certified document(s) showing the transfer is attached.

The interest identified in option 1, 2 or 3 above (not option 4) is evidenced by either (choose one of options A or B below):

A. ☐ An assignment from the inventor(s) of the patent application/patent identified above. The assignment was recorded in the United States Patent and Trademark Office at Reel _____, Frame _____, or for which a copy thereof is attached.

B. ☑ A chain of title from the inventor(s), of the patent application/patent identified above, to the current assignee as follows:

1. From: Steuer, Jonathan S.; Otto, Christopher W. To: Anonymous Media LLC

The document was recorded in the United States Patent and Trademark Office at

Reel 049106, Frame 0325, or for which a copy thereof is attached.

2. From: Anonymous Media LLC To: Anonymous Media Research LLC

The document was recorded in the United States Patent and Trademark Office at

Reel 049106, Frame 0354, or for which a copy thereof is attached.

This collection of information is required by 37 CFR 3.73(b). The information is required to obtain or retain a benefit by the public which is to file (and by the USPTO to process) an application. Confidentiality is governed by 35 U.S.C. 122 and 37 CFR 1.11 and 1.14. This collection is estimated to take 12 minutes to complete, including gathering, preparing, and submitting the completed application form to the USPTO. Time will vary depending upon the individual case. Any comments on the amount of time you require to complete this form and/or suggestions for reducing this burden, should be sent to the Chief Information Officer, U.S. Patent and Trademark Office, U.S. Department of Commerce, P.O. Box 1450, Alexandria, VA 22313-1450. DO NOT SEND FEES OR COMPLETED FORMS TO THIS ADDRESS. **SEND TO: Commissioner for Patents, P.O. Box 1450, Alexandria, VA 22313-1450.**

If you need assistance in completing the form, call 1-800-PTO-9199 and select option 2.

Under the Paperwork Reduction Act of 1995, no persons are required to respond to a collection of information unless it displays a valid OMB control number.

STATEMENT UNDER 37 CFR 3.73(c)

3. From: _____ To: _____

The document was recorded in the United States Patent and Trademark Office at

Reel _____, Frame _____, or for which a copy thereof is attached.

4. From: _____ To: _____

The document was recorded in the United States Patent and Trademark Office at

Reel _____, Frame _____, or for which a copy thereof is attached.

5. From: _____ To: _____

The document was recorded in the United States Patent and Trademark Office at

Reel _____, Frame _____, or for which a copy thereof is attached.

6. From: _____ To: _____

The document was recorded in the United States Patent and Trademark Office at

Reel _____, Frame _____, or for which a copy thereof is attached.

☐ Additional documents in the chain of title are listed on a supplemental sheet(s).

☑ As required by 37 CFR 3.73(c)(1)(i), the documentary evidence of the chain of title from the original owner to the assignee was, or concurrently is being, submitted for recordation pursuant to 37 CFR 3.11.

[NOTE: A separate copy (i.e., a true copy of the original assignment document(s)) must be submitted to Assignment Division in accordance with 37 CFR Part 3, to record the assignment in the records of the USPTO. See MPEP 302.08]

The undersigned (whose title is supplied below) is authorized to act on behalf of the assignee.

/Lawrence Gabuzda/	June 7, 2019
Signature	Date
Lawrence Gabuzda	51,711
Printed or Typed Name	Title or Registration Number

PATENT APPLICATION FEE DETERMINATION RECORD

Substitute for Form PTO-875

Application or Docket Number
16/403,204

APPLICATION AS FILED - PART I

FOR	(Column 1) NUMBER FILED	(Column 2) NUMBER EXTRA	SMALL ENTITY RATE($)	SMALL ENTITY FEE($)	OR	OTHER THAN SMALL ENTITY RATE($)	OTHER THAN SMALL ENTITY FEE($)
BASIC FEE (37 CFR 1.16(a), (b), or (c))	N/A	N/A	N/A	75		N/A	
SEARCH FEE (37 CFR 1.16(k), (i), or (m))	N/A	N/A	N/A	330		N/A	
EXAMINATION FEE (37 CFR 1.16(o), (p), or (q))	N/A	N/A	N/A	380		N/A	
TOTAL CLAIMS (37 CFR 1.16(i))	12 minus 20 =	*	x 50 =	0.00	OR		
INDEPENDENT CLAIMS (37 CFR 1.16(h))	2 minus 3 =	*	x 230 =	0.00			
APPLICATION SIZE FEE (37 CFR 1.16(s))	If the specification and drawings exceed 100 sheets of paper, the application size fee due is $310 ($155 for small entity) for each additional 50 sheets or fraction thereof. See 35 U.S.C. 41(a)(1)(G) and 37 CFR 1.16(s).			0.00			
MULTIPLE DEPENDENT CLAIM PRESENT (37 CFR 1.16(j))				0.00			
* If the difference in column 1 is less than zero, enter "0" in column 2.			TOTAL	785		TOTAL	

APPLICATION AS AMENDED - PART II

		(Column 1) CLAIMS REMAINING AFTER AMENDMENT		(Column 2) HIGHEST NUMBER PREVIOUSLY PAID FOR	(Column 3) PRESENT EXTRA	SMALL ENTITY RATE($)	SMALL ENTITY ADDITIONAL FEE($)	OR	OTHER THAN SMALL ENTITY RATE($)	OTHER THAN SMALL ENTITY ADDITIONAL FEE($)
AMENDMENT A	Total (37 CFR 1.16(i))	*	Minus	**	=	x =		OR	x =	
AMENDMENT A	Independent (37 CFR 1.16(h))	*	Minus	***	=	x =		OR	x =	
AMENDMENT A	Application Size Fee (37 CFR 1.16(s))									
AMENDMENT A	FIRST PRESENTATION OF MULTIPLE DEPENDENT CLAIM (37 CFR 1.16(j))							OR		
						TOTAL ADD'L FEE		OR	TOTAL ADD'L FEE	

		(Column 1) CLAIMS REMAINING AFTER AMENDMENT		(Column 2) HIGHEST NUMBER PREVIOUSLY PAID FOR	(Column 3) PRESENT EXTRA	RATE($)	ADDITIONAL FEE($)	OR	RATE($)	ADDITIONAL FEE($)
AMENDMENT B	Total (37 CFR 1.16(i))	*	Minus	**	=	x =		OR	x =	
AMENDMENT B	Independent (37 CFR 1.16(h))	*	Minus	***	=	x =		OR	x =	
AMENDMENT B	Application Size Fee (37 CFR 1.16(s))									
AMENDMENT B	FIRST PRESENTATION OF MULTIPLE DEPENDENT CLAIM (37 CFR 1.16(j))							OR		
						TOTAL ADD'L FEE		OR	TOTAL ADD'L FEE	

* If the entry in column 1 is less than the entry in column 2, write "0" in column 3.
** If the "Highest Number Previously Paid For" IN THIS SPACE is less than 20, enter "20".
*** If the "Highest Number Previously Paid For" IN THIS SPACE is less than 3, enter "3".
The "Highest Number Previously Paid For" (Total or Independent) is the highest found in the appropriate box in column 1.

UNITED STATES PATENT AND TRADEMARK OFFICE

UNITED STATES DEPARTMENT OF COMMERCE
United States Patent and Trademark Office
Address: COMMISSIONER FOR PATENTS
P.O. Box 1450
Alexandria, Virginia 22313-1450
www.uspto.gov

APPLICATION NUMBER	FILING or 371(c) DATE	GRP ART UNIT	FIL FEE REC'D	ATTY.DOCKET.NO	TOT CLAIMS	IND CLAIMS
16/403,204	05/03/2019		785	10004-2000116	12	2

CONFIRMATION NO. 1048

FILING RECEIPT

OC000000108209437

51417
Mauriel Kapouytian Woods LLP
15 W. 26th Street
7th Floor
New York, NY 10010

Date Mailed: 05/16/2019

Receipt is acknowledged of this non-provisional utility patent application. The application will be taken up for examination in due course. Applicant will be notified as to the results of the examination. Any correspondence concerning the application must include the following identification information: the U.S. APPLICATION NUMBER, FILING DATE, NAME OF FIRST INVENTOR, and TITLE OF INVENTION. Fees transmitted by check or draft are subject to collection.

Please verify the accuracy of the data presented on this receipt. If an error is noted on this Filing Receipt, please submit a written request for a corrected Filing Receipt, including a properly marked-up ADS showing the changes with strike-through for deletions and underlining for additions. If you received a "Notice to File Missing Parts" or other Notice requiring a response for this application, please submit any request for correction to this Filing Receipt with your reply to the Notice. When the USPTO processes the reply to the Notice, the USPTO will generate another Filing Receipt incorporating the requested corrections provided that the request is grantable.

Inventor(s)

Jonathan S. Steuer, New York, NY;
Christopher W. Otto, San Francisco, CA;

Applicant(s)

Anonymous Media Research, LLC, New York, NY;

Assignment For Published Patent Application

Anonymous Media Research, LLC, New York, NY

Power of Attorney: None

Domestic Priority data as claimed by applicant

This application is a DIV of 14/175,811 02/07/2014 ABN
which is a CON of 13/914,870 06/11/2013 ABN
which is a CON of 12/954,604 11/24/2010 ABN
which is a DIV of 11/139,330 05/26/2005 ABN
which claims benefit of 60/574,836 05/27/2004

Foreign Applications for which priority is claimed (You may be eligible to benefit from the **Patent Prosecution Highway** program at the USPTO. Please see http://www.uspto.gov for more information.) - None.
Foreign application information must be provided in an Application Data Sheet in order to constitute a claim to foreign priority. See 37 CFR 1.55 and 1.76.

Permission to Access Application via Priority Document Exchange: No

Permission to Access Search Results: No

Applicant may provide or rescind an authorization for access using Form PTO/SB/39 or Form PTO/SB/69 as appropriate.

If Required, Foreign Filing License Granted: 05/15/2019
The country code and number of your priority application, to be used for filing abroad under the Paris Convention, is **US 16/403,204**
Projected Publication Date: 08/22/2019
Non-Publication Request: No
Early Publication Request: No
**** SMALL ENTITY ****
Title

MEDIA USAGE MONITORING AND MEASUREMENT SYSTEM AND METHOD

Preliminary Class

Statement under 37 CFR 1.55 or 1.78 for AIA (First Inventor to File) Transition Applications: No

PROTECTING YOUR INVENTION OUTSIDE THE UNITED STATES

Since the rights granted by a U.S. patent extend only throughout the territory of the United States and have no effect in a foreign country, an inventor who wishes patent protection in another country must apply for a patent in a specific country or in regional patent offices. Applicants may wish to consider the filing of an international application under the Patent Cooperation Treaty (PCT). An international (PCT) application generally has the same effect as a regular national patent application in each PCT-member country. The PCT process **simplifies** the filing of patent applications on the same invention in member countries, but **does not result** in a grant of "an international patent" and does not eliminate the need of applicants to file additional documents and fees in countries where patent protection is desired.

Almost every country has its own patent law, and a person desiring a patent in a particular country must make an application for patent in that country in accordance with its particular laws. Since the laws of many countries differ in various respects from the patent law of the United States, applicants are advised to seek guidance from specific foreign countries to ensure that patent rights are not lost prematurely.

Applicants also are advised that in the case of inventions made in the United States, the Director of the USPTO must issue a license before applicants can apply for a patent in a foreign country. The filing of a U.S. patent application serves as a request for a foreign filing license. The application's filing receipt contains further information and guidance as to the status of applicant's license for foreign filing.

Applicants may wish to consult the USPTO booklet, "General Information Concerning Patents" (specifically, the section entitled "Treaties and Foreign Patents") for more information on timeframes and deadlines for filing foreign patent applications. The guide is available either by contacting the USPTO Contact Center at 800-786-9199, or it can be viewed on the USPTO website at http://www.uspto.gov/web/offices/pac/doc/general/index.html.

For information on preventing theft of your intellectual property (patents, trademarks and copyrights), you may wish to consult the U.S. Government website, http://www.stopfakes.gov. Part of a Department of Commerce initiative, this website includes self-help "toolkits" giving innovators guidance on how to protect intellectual property in specific

countries such as China, Korea and Mexico. For questions regarding patent enforcement issues, applicants may call the U.S. Government hotline at 1-866-999-HALT (1-866-999-4258).

LICENSE FOR FOREIGN FILING UNDER

Title 35, United States Code, Section 184

Title 37, Code of Federal Regulations, 5.11 & 5.15

GRANTED

The applicant has been granted a license under 35 U.S.C. 184, if the phrase "IF REQUIRED, FOREIGN FILING LICENSE GRANTED" followed by a date appears on this form. Such licenses are issued in all applications where the conditions for issuance of a license have been met, regardless of whether or not a license may be required as set forth in 37 CFR 5.15. The scope and limitations of this license are set forth in 37 CFR 5.15(a) unless an earlier license has been issued under 37 CFR 5.15(b). The license is subject to revocation upon written notification. The date indicated is the effective date of the license, unless an earlier license of similar scope has been granted under 37 CFR 5.13 or 5.14.

This license is to be retained by the licensee and may be used at any time on or after the effective date thereof unless it is revoked. This license is automatically transferred to any related applications(s) filed under 37 CFR 1.53(d). This license is not retroactive.

The grant of a license does not in any way lessen the responsibility of a licensee for the security of the subject matter as imposed by any Government contract or the provisions of existing laws relating to espionage and the national security or the export of technical data. Licensees should apprise themselves of current regulations especially with respect to certain countries, of other agencies, particularly the Office of Defense Trade Controls, Department of State (with respect to Arms, Munitions and Implements of War (22 CFR 121-128)); the Bureau of Industry and Security, Department of Commerce (15 CFR parts 730-774); the Office of Foreign AssetsControl, Department of Treasury (31 CFR Parts 500+) and the Department of Energy.

NOT GRANTED

No license under 35 U.S.C. 184 has been granted at this time, if the phrase "IF REQUIRED, FOREIGN FILING LICENSE GRANTED" DOES NOT appear on this form. Applicant may still petition for a license under 37 CFR 5.12, if a license is desired before the expiration of 6 months from the filing date of the application. If 6 months has lapsed from the filing date of this application and the licensee has not received any indication of a secrecy order under 35 U.S.C. 181, the licensee may foreign file the application pursuant to 37 CFR 5.15(b).

SelectUSA

The United States represents the largest, most dynamic marketplace in the world and is an unparalleled location for business investment, innovation, and commercialization of new technologies. The U.S. offers tremendous resources and advantages for those who invest and manufacture goods here. Through SelectUSA, our nation works to promote and facilitate business investment. SelectUSA provides information assistance to the international investor community; serves as an ombudsman for existing and potential investors; advocates on behalf of U.S. cities, states, and regions competing for global investment; and counsels U.S. economic development organizations on investment attraction best practices. To learn more about why the United States is the best country in the world to develop

technology, manufacture products, deliver services, and grow your business, visit http://www.SelectUSA.gov or call +1-202-482-6800.

PTO/AIA/15 (03-13)
Approved for use through 01/31/2014. OMB 0651-0032
U.S. Patent and Trademark Office; U.S. DEPARTMENT OF COMMERCE
Under the Paperwork Reduction Act of 1995 no persons are required to respond to a collection of information unless it displays a valid OMB control number

UTILITY PATENT APPLICATION TRANSMITTAL

(Only for new nonprovisional applications under 37 CFR 1.53(b))

Attorney Docket No.	10004-2000116
First Named Inventor	Jonathan S. Steuer
Title	MEDIA USAGE MONITORING AND MEASUREMENT SYSTEM AND METHOD
Express Mail Label No.	

APPLICATION ELEMENTS

See MPEP chapter 600 concerning utility patent application contents.

1. [ ] **Fee Transmittal Form** (PTO/SB/17 or equivalent)
2. [✓] **Applicant asserts small entity status.** See 37 CFR 1.27
3. [ ] **Applicant certifies micro entity status.** See 37 CFR 1.29. Applicant must attach form PTO/SB/15A or B or equivalent.
4. [✓] **Specification** [*Total Pages* 30] Both the claims and abstract must start on a new page. *(See MPEP § 608.01(a) for information on the preferred arrangement)*
5. [✓] **Drawing(s)** (35 U.S.C. 113) [*Total Sheets* 7]
6. **Inventor's Oath or Declaration** [*Total Pages* 3] *(including substitute statements under 37 CFR 1.64 and assignments serving as an oath or declaration under 37 CFR 1.63(e))*
   a. [ ] Newly executed (original or copy)
   b. [✓] A copy from a prior application (37 CFR 1.63(d))
7. [✓] **Application Data Sheet** ** See note below.* See 37 CFR 1.76 (PTO/AIA/14 or equivalent)
8. **CD-ROM or CD-R** in duplicate, large table, or Computer Program (*Appendix*)
   [ ] Landscape Table on CD
9. **Nucleotide and/or Amino Acid Sequence Submission** (*If applicable, items a. – c. are required*)
   a. [ ] Computer Readable Form (CRF)
   b. [ ] Specification Sequence Listing on:
      i. [ ] CD-ROM or CD-R (2 copies); or
      ii. [ ] Paper
   c. [ ] Statements verifying identity of above copies

ADDRESS TO: Commissioner for Patents, P.O. Box 1450, Alexandria, VA 22313-1450

ACCOMPANYING APPLICATION PAPERS

10. [ ] **Assignment Papers** (cover sheet & document(s))
    Name of Assignee .....
11. [ ] **37 CFR 3.73(c) Statement** (*when there is an assignee*) [ ] **Power of Attorney**
12. [ ] **English Translation Document** (*if applicable*)
13. [ ] **Information Disclosure Statement** (PTO/SB/08 or PTO-1449)
    [ ] Copies of citations attached
14. [ ] **Preliminary Amendment**
15. [ ] **Return Receipt Postcard** (*MPEP § 503*) (*Should be specifically itemized*)
16. [ ] **Certified Copy of Priority Document(s)** (*if foreign priority is claimed*)
17. [ ] **Nonpublication Request** Under 35 U.S.C. 122(b)(2)(B)(i). Applicant must attach form PTO/SB/35 or equivalent.
18. [ ] **Other:** .....

*Note: (1) Benefit claims under 37 CFR 1.78 and foreign priority claims under 1.55 **must** be included in an Application Data Sheet (ADS).
(2) For applications filed under 35 U.S.C. 111, the application must contain an ADS specifying the applicant if the applicant is an assignee, person to whom the inventor is under an obligation to assign, or person who otherwise shows sufficient proprietary interest in the matter. See 37 CFR 1.46(b).

19. CORRESPONDENCE ADDRESS

[✓] The address associated with Customer Number: 51417 OR [ ] Correspondence address below

Name					
Address					
City		State		Zip Code	
Country		Telephone		Email	

Signature	/Lawrence Gabuzda/	Date	5/3/2019
Name (Print/Type)	Lawrence Gabuzda	Registration No. (Attorney/Agent)	51,711

This collection of information is required by 37 CFR 1.53(b). The information is required to obtain or retain a benefit by the public which is to file (and by the USPTO to process) an application. Confidentiality is governed by 35 U.S.C. 122 and 37 CFR 1.11 and 1.14. This collection is estimated to take 12 minutes to complete, including gathering, preparing, and submitting the completed application form to the USPTO. Time will vary depending upon the individual case. Any comments on the amount of time you require to complete this form and/or suggestions for reducing this burden, should be sent to the Chief Information Officer, U.S. Patent and Trademark Office, U.S. Department of Commerce, P.O. Box 1450, Alexandria, VA 22313-1450. DO NOT SEND FEES OR COMPLETED FORMS TO THIS ADDRESS. **SEND TO: Commissioner for Patents, P.O. Box 1450, Alexandria, VA 22313-1450.**

If you need assistance in completing the form, call 1-800-PTO-9199 and select option 2.

Electronic Patent Application Fee Transmittal

Application Number:	
Filing Date:	
Title of Invention:	MEDIA USAGE MONITORING AND MEASUREMENT SYSTEM AND METHOD
First Named Inventor/Applicant Name:	Jonathan S. Steuer
Filer:	Lawrence R. Gabuzda/Emily Sullenberger
Attorney Docket Number:	10004-2000116

Filed as Small Entity

Filing Fees for Utility under 35 USC 111(a)

Description	Fee Code	Quantity	Amount	Sub-Total in USD($)
Basic Filing:				
UTILITY FILING FEE (ELECTRONIC FILING)	4011	1	75	75
UTILITY SEARCH FEE	2111	1	330	330
UTILITY EXAMINATION FEE	2311	1	380	380
Pages:				
Claims:				
Miscellaneous-Filing:				
Petition:				
Patent-Appeals-and-Interference:				

Description	Fee Code	Quantity	Amount	Sub-Total in USD($)
Post-Allowance-and-Post-Issuance:				
Extension-of-Time:				
Miscellaneous:				
			Total in USD ($)	**785**

Electronic Acknowledgement Receipt	
EFS ID:	35915095
Application Number:	16403204
International Application Number:	
Confirmation Number:	1048
Title of Invention:	MEDIA USAGE MONITORING AND MEASUREMENT SYSTEM AND METHOD
First Named Inventor/Applicant Name:	Jonathan S. Steuer
Customer Number:	51417
Filer:	Lawrence R. Gabuzda/Emily Sullenberger
Filer Authorized By:	Lawrence R. Gabuzda
Attorney Docket Number:	10004-2000116
Receipt Date:	03-MAY-2019
Filing Date:	
Time Stamp:	17:43:48
Application Type:	Utility under 35 USC 111(a)

Payment information:

Submitted with Payment	yes
Payment Type	EFT
Payment was successfully received in RAM	$785
RAM confirmation Number	050619INTEFSW17441500
Deposit Account	504242
Authorized User	Emily Sullenberger
The Director of the USPTO is hereby authorized to charge indicated fees and credit any overpayment as follows: 37 CFR 1.16 (National application filing, search, and examination fees) 37 CFR 1.19 (Document supply fees)	

37 CFR 1.21 (Miscellaneous fees and charges)

File Listing:

Document Number	Document Description	File Name	File Size(Bytes)/ Message Digest	Multi Part /.zip	Pages (if appl.)
1	Application Data Sheet	10004-2000116ADS.pdf	2748657 d900ded97a9a12475174f6e36ccc4195c5d7fac9	no	6
Warnings:					
Information:					
This is not an USPTO supplied ADS fillable form					
2	Oath or Declaration filed	10004-2000104Declarations.pdf	2099889 835cb683ab03f99f96a11083c20d077fbc62a817	no	3
Warnings:					
Information:					
3		10004-2000116Specification.pdf	541754 ee2e50b580b67bd609317e98e75c653341abe153	yes	30

Multipart Description/PDF files in .zip description

Document Description	Start	End
Abstract	30	30
Claims	27	29
Specification	1	26

Warnings:					
Information:					
4	Drawings-only black and white line drawings	10004-2000116Figures.pdf	5294431 ba9ae88ff66db159d6e067514589e4914ee32719	no	7
Warnings:					
Information:					

5	Transmittal of New Application	10004-2000116AppTrans.pdf	2004225 7a72a341984a4304f36d1ed04b876ba01eb774f7	no	1
Warnings:					
Information:					
6	Fee Worksheet (SB06)	fee-info.pdf	35246 25101f2e7aac5d72a264d12b39b464d6a1183079	no	2
Warnings:					
Information:					
		Total Files Size (in bytes):	12724202		

This Acknowledgement Receipt evidences receipt on the noted date by the USPTO of the indicated documents, characterized by the applicant, and including page counts, where applicable. It serves as evidence of receipt similar to a Post Card, as described in MPEP 503.

<u>New Applications Under 35 U.S.C. 111</u>
If a new application is being filed and the application includes the necessary components for a filing date (see 37 CFR 1.53(b)-(d) and MPEP 506), a Filing Receipt (37 CFR 1.54) will be issued in due course and the date shown on this Acknowledgement Receipt will establish the filing date of the application.
<u>National Stage of an International Application under 35 U.S.C. 371</u>
If a timely submission to enter the national stage of an international application is compliant with the conditions of 35 U.S.C. 371 and other applicable requirements a Form PCT/DO/EO/903 indicating acceptance of the application as a national stage submission under 35 U.S.C. 371 will be issued in addition to the Filing Receipt, in due course.
<u>New International Application Filed with the USPTO as a Receiving Office</u>
If a new international application is being filed and the international application includes the necessary components for an international filing date (see PCT Article 11 and MPEP 1810), a Notification of the International Application Number and of the International Filing Date (Form PCT/RO/105) will be issued in due course, subject to prescriptions concerning national security, and the date shown on this Acknowledgement Receipt will establish the international filing date of the application.

Under the Paperwork Reduction Act of 1995, no persons are required to respond to a collection of information unless it contains a valid OMB control number.

Application Data Sheet 37 CFR 1.76	Attorney Docket Number	10004-2000116
	Application Number	
Title of Invention	MEDIA USAGE MONITORING AND MEASURMENT SYSTEM AND METHOD	

The application data sheet is part of the provisional or nonprovisional application for which it is being submitted. The following form contains the bibliographic data arranged in a format specified by the United States Patent and Trademark Office as outlined in 37 CFR 1.76.
This document may be completed electronically and submitted to the Office in electronic format using the Electronic Filing System (EFS) or the document may be printed and included in a paper filed application.

Secrecy Order 37 CFR 5.2

☐ Portions or all of the application associated with this Application Data Sheet may fall under a Secrecy Order pursuant to 37 CFR 5.2 (Paper filers only. Applications that fall under Secrecy Order may not be filed electronically.)

Inventor Information:

Inventor 1 Remove

Legal Name

Prefix	Given Name	Middle Name	Family Name	Suffix
	Jonathan	S.	Steuer	

Residence Information (Select One) ◉ US Residency ◯ Non US Residency ◯ Active US Military Service

City	New York	State/Province	NY	Country of Residence	US

Mailing Address of Inventor:

Address 1	72 East 3rd Street, Apartment 2B		
Address 2			
City	New York	State/Province	NY
Postal Code	10003	Country	US

Inventor 2 Remove

Legal Name

Prefix	Given Name	Middle Name	Family Name	Suffix
	Christopher	W.	Otto	

Residence Information (Select One) ◉ US Residency ◯ Non US Residency ◯ Active US Military Service

City	San Francisco	State/Province	CA	Country of Residence	US

Mailing Address of Inventor:

Address 1	72 East 3rd Street, Apartment 2B		
Address 2			
City	New York	State/Province	NY
Postal Code	10003	Country	US

All Inventors Must Be Listed - Additional Inventor Information blocks may be generated within this form by selecting the **Add** button. Add

Correspondence Information:

Enter either Customer Number or complete the Correspondence Information section below. For further information see 37 CFR 1.33(a).

Under the Paperwork Reduction Act of 1995, no persons are required to respond to a collection of information unless it contains a valid OMB control number.

Application Data Sheet 37 CFR 1.76	Attorney Docket Number	10004-2000116
	Application Number	

Title of Invention	MEDIA USAGE MONITORING AND MEASURMENT SYSTEM AND METHOD

☐ **An Address is being provided for the correspondence Information of this application.**

Customer Number	51417		
Email Address		Add Email	Remove Email

Application Information:

Title of the Invention	MEDIA USAGE MONITORING AND MEASURMENT SYSTEM AND METHOD		
Attorney Docket Number	10004-2000116	**Small Entity Status Claimed**	☒
Application Type	Nonprovisional		
Subject Matter	Utility		
Total Number of Drawing Sheets (if any)	7	**Suggested Figure for Publication (if any)**	

Publication Information:

☐ Request Early Publication (Fee required at time of Request 37 CFR 1.219)

☐ **Request Not to Publish.** I hereby request that the attached application not be published under 35 U.S.C. 122(b) and certify that the invention disclosed in the attached application **has not and will not** be the subject of an application filed in another country, or under a multilateral international agreement, that requires publication at eighteen months after filing.

Representative Information:

Representative information should be provided for all practitioners having a power of attorney in the application. Providing this information in the Application Data Sheet does not constitute a power of attorney in the application (see 37 CFR 1.32).
Either enter Customer Number or complete the Representative Name section below. If both sections are completed the customer Number will be used for the Representative Information during processing.

Please Select One:	◉ Customer Number	○ US Patent Practitioner	○ Limited Recognition (37 CFR 11.9)
Customer Number	51417		

Domestic Benefit/National Stage Information:

This section allows for the applicant to either claim benefit under 35 U.S.C. 119(e), 120, 121, or 365(c) or indicate National Stage entry from a PCT application. Providing this information in the application data sheet constitutes the specific reference required by 35 U.S.C. 119(e) or 120, and 37 CFR 1.78.

Prior Application Status	Pending		Remove
Application Number	Continuity Type	Prior Application Number	Filing Date (YYYY-MM-DD)
	Division of	14/175811	2014-02-07
Prior Application Status	Pending		Remove

Application Data Sheet 37 CFR 1.76	Attorney Docket Number	10004-2000116
	Application Number	
Title of Invention	MEDIA USAGE MONITORING AND MEASURMENT SYSTEM AND METHOD	

Application Number	Continuity Type	Prior Application Number	Filing Date (YYYY-MM-DD)
14/175811	Continuation of	13/914870	2013-06-11
Prior Application Status	Abandoned		Remove
Application Number	Continuity Type	Prior Application Number	Filing Date (YYYY-MM-DD)
13/914870	Continuation of	12/954604	2010-11-24
Prior Application Status	Abandoned		Remove
Application Number	Continuity Type	Prior Application Number	Filing Date (YYYY-MM-DD)
12/954604	Division of	11/139330	2005-05-26
Prior Application Status	Expired		Remove
Application Number	Continuity Type	Prior Application Number	Filing Date (YYYY-MM-DD)
11/139330	non provisional of	60/574836	2004-05-27

Additional Domestic Benefit/National Stage Data may be generated within this form by selecting the **Add** button.

Foreign Priority Information:

This section allows for the applicant to claim priority to a foreign application. Providing this information in the application data sheet constitutes the claim for priority as required by 35 U.S.C. 119(b) and 37 CFR 1.55(d). When priority is claimed to a foreign application that is eligible for retrieval under the priority document exchange program (PDX)[i] the information will be used by the Office to automatically attempt retrieval pursuant to 37 CFR 1.55(h)(1) and (2). Under the PDX program, applicant bears the ultimate responsibility for ensuring that a copy of the foreign application is received by the Office from the participating foreign intellectual property office, or a certified copy of the foreign priority application is filed, within the time period specified in 37 CFR 1.55(g)(1).

Remove

Application Number	Country[i]	Filing Date (YYYY-MM-DD)	Access Code[i] (if applicable)

Additional Foreign Priority Data may be generated within this form by selecting the **Add** button.

Statement under 37 CFR 1.55 or 1.78 for AIA (First Inventor to File) Transition Applications

☐ This application (1) claims priority to or the benefit of an application filed before March 16, 2013 and (2) also contains, or contained at any time, a claim to a claimed invention that has an effective filing date on or after March 16, 2013.

Application Data Sheet 37 CFR 1.76	Attorney Docket Number	10004-2000116
	Application Number	
Title of Invention	MEDIA USAGE MONITORING AND MEASURMENT SYSTEM AND METHOD	

Authorization to Permit Access:

☐ Authorization to Permit Access to the Instant Application by the Participating Offices

If checked, the undersigned hereby grants the USPTO authority to provide the European Patent Office (EPO), the Japan Patent Office (JPO), the Korean Intellectual Property Office (KIPO), the World Intellectual Property Office (WIPO), and any other intellectual property offices in which a foreign application claiming priority to the instant patent application is filed access to the instant patent application. See 37 CFR 1.14(c) and (h). This box should not be checked if the applicant does not wish the EPO, JPO, KIPO, WIPO, or other intellectual property office in which a foreign application claiming priority to the instant patent application is filed to have access to the instant patent application.

In accordance with 37 CFR 1.14(h)(3), access will be provided to a copy of the instant patent application with respect to: 1) the instant patent application-as-filed; 2) any foreign application to which the instant patent application claims priority under 35 U.S.C. 119(a)-(d) if a copy of the foreign application that satisfies the certified copy requirement of 37 CFR 1.55 has been filed in the instant patent application; and 3) any U.S. application-as-filed from which benefit is sought in the instant patent application.

In accordance with 37 CFR 1.14(c), access may be provided to information concerning the date o f filing this Authorization.

Applicant Information:

Providing assignment information in this section does not substitute for compliance with any requirement of part 3 of Title 37 of CFR to have an assignment recorded by the Office.

Applicant 1

If the applicant is the inventor (or the remaining joint inventor or inventors under 37 CFR 1.45), this section should not be completed. The information to be provided in this section is the name and address of the legal representative who is the applicant under 37 CFR 1.43; or the name and address of the assignee, person to whom the inventor is under an obligation to assign the invention, or person who otherwise shows sufficient proprietary interest in the matter who is the applicant under 37 CFR 1.46. If the applicant is an applicant under 37 CFR 1.46 (assignee, person to whom the inventor is obligated to assign, or person who otherwise shows sufficient proprietary interest) together with one or more joint inventors, then the joint inventor or inventors who are also the applicant should be identified in this section.

Clear

◉ Assignee	○ Legal Representative under 35 U.S.C. 117	○ Joint Inventor
○ Person to whom the inventor is obligated to assign.	○ Person who shows sufficient proprietary interest	

If applicant is the legal representative, indicate the authority to file the patent application, the inventor is:

Name of the Deceased or Legally Incapacitated Inventor :

If the Applicant is an Organization check here. ☒

Organization Name	Anonymous Media Research, LLC

Under the Paperwork Reduction Act of 1995, no persons are required to respond to a collection of information unless it contains a valid OMB control number.

Application Data Sheet 37 CFR 1.76	Attorney Docket Number	10004-2000116
	Application Number	

Title of Invention	MEDIA USAGE MONITORING AND MEASURMENT SYSTEM AND METHOD

Mailing Address Information For Applicant:			
Address 1	72 East 3rd Street, Apartment 2B		
Address 2			
City	New York	**State/Province**	NY
Country	US	Postal Code	10003
Phone Number		Fax Number	
Email Address			

Additional Applicant Data may be generated within this form by selecting the Add button.

Non-Applicant Assignee Information:

Providing assignment information in this section does not subsitute for compliance with any requirement of part 3 of Title 37 of CFR to have an assignment recorded by the Office.

Assignee 1

Complete this section only if non-applicant assignee information is desired to be included on the patent application publication in accordance with 37 CFR 1.215(b). Do not include in this section an applicant under 37 CFR 1.46 (assignee, person to whom the inventor is obligated to assign, or person who otherwise shows sufficient proprietary interest), as the patent application publication will include the name of the applicant(s).

If the Assignee is an Organization check here. ☒

Organization Name	Anonymous Media Research, LLC

Mailing Address Information For Non-Applicant Assignee:			
Address 1	72 East 3rd Street, Apartment 2B		
Address 2			
City	New York	**State/Province**	NY
Country	US	Postal Code	10003
Phone Number		Fax Number	
Email Address			

Additional Assignee Data may be generated within this form by selecting the Add button.

Signature:

NOTE: This form must be signed in accordance with 37 CFR 1.33. See 37 CFR 1.4 for signature requirements and certifications.

Signature	/Lawrence Gabuzda/	Date (YYYY-MM-DD)	2019-05-03

Application Data Sheet 37 CFR 1.76	Attorney Docket Number	10004-2000116
	Application Number	
Title of Invention	MEDIA USAGE MONITORING AND MEASURMENT SYSTEM AND METHOD	

First Name	Lawrence	Last Name	Gabuzda	Registration Number	51711
Additional Signature may be generated within this form by selecting the Add button.					

This collection of information is required by 37 CFR 1.76. The information is required to obtain or retain a benefit by the public which is to file (and by the USPTO to process) an application. Confidentiality is governed by 35 U.S.C. 122 and 37 CFR 1.14. This collection is estimated to take 23 minutes to complete, including gathering, preparing, and submitting the completed application data sheet form to the USPTO. Time will vary depending upon the individual case. Any comments on the amount of time you require to complete this form and/or suggestions for reducing this burden, should be sent to the Chief Information Officer, U.S. Patent and Trademark Office, U.S. Department of Commerce, P.O. Box 1450, Alexandria, VA 22313-1450. DO NOT SEND FEES OR COMPLETED FORMS TO THIS ADDRESS. **SEND TO: Commissioner for Patents, P.O. Box 1450, Alexandria, VA 22313-1450.**

PTO/AIA/08 (08-12)
Approved for use through 01/31/2014. OMB 0651-0032
U.S. Patent and Trademark Office; U.S. DEPARTMENT OF COMMERCE

Under the Paperwork Reduction Act of 1995, no persons are required to respond to a collection of information unless it contains a valid OMB control number.

DECLARATION FOR UTILITY OR DESIGN PATENT APPLICATION (37 CFR 1.63)

☐ Declaration Submitted With Initial Filing OR ☒ Declaration Submitted After Initial Filing (surcharge (37 CFR 1.16(f)) required)

Attorney Docket Number	10004-2000104
First Named Inventor	Jonathan S. Steuer
COMPLETE IF KNOWN	
Application Number	14/175,811
Filing Date	February 7, 2014
Art Unit	Not Yet Assigned
Examiner Name	Not Yet Assigned

MEDIA USAGE MONITORING AND MEASUREMENT SYSTEM AND METHOD

(Title of the invention)

As a below named inventor, I hereby declare that:

This declaration is directed to:

☐ The attached application,

OR

☒ United States Application Number or PCT International application number 14/175,811 filed on February 7, 2014.

The above-identified application was made or authorized to be made by me.

I believe I am the original inventor or an original joint inventor of a claimed invention in the application.

I hereby acknowledge that any willful false statement made in this declaration is punishable under 18 U.S.C. 1001 by fine or imprisonment of not more than five (5) years, or both.

Authorization To Permit Access To Application by Participating Office

☐ If checked, the undersigned hereby grants the USPTO authority to provide the European Patent Office (EPO), the Japan Patent Office (JPO), the Korean Intellectual Property Office (KIPO), the World Intellectual Property Office (WIPO), and any other intellectual property offices in which a foreign application claiming priority to the above-identified patent application is filed access to the above-identified patent application. See 37 CFR 1.14(c) and (h). This box should not be checked if the applicant does not wish the EPO, JPO, KIPO, WIPO, or other intellectual property office in which a foreign application claiming priority to the above-identified patent application is filed to have access to the above-identified patent application.

In accordance with 37 CFR 1.14(h)(3), access will be provided to a copy of the above-identified patent application with respect to: 1) the above-identified patent application-as-filed; 2) any foreign application to which the above-identified patent application claims priority under 35 U.S.C. 119(a)-(d) if a copy of the foreign application that satisfies the certified copy requirement of 37 CFR 1.55 has been filed in the above-identified patent application; and 3) any U.S. application-as-filed from which benefit is sought in the above-identified patent application.

In accordance with 37 CFR 1.14(c), access may be provided to information concerning the date of filing the Authorization to Permit Access to Application by Participating Offices.

This collection of information is required by 35 U.S.C. 115 and 37 CFR 1.63. The information is required to obtain or retain a benefit by the public which is to file (and by the USPTO to process) an application. Confidentiality is governed by 35 U.S.C. 122 and 37 CFR 1.11 and 1.14. This collection is estimated to take 21 minutes to complete, including gathering, preparing, and submitting the completed application form to the USPTO. Time will vary depending upon the individual case. Any comments on the amount of time you require to complete this form and/or suggestions for reducing this burden, should be sent to the Chief Information Officer, U.S. Patent and Trademark Office, U.S. Department of Commerce, P.O. Box 1450, Alexandria, VA 22313-1450. DO NOT SEND FEES OR COMPLETED FORMS TO THIS ADDRESS. **SEND TO: Commissioner for Patents, P.O. Box 1450, Alexandria, VA 22313-1450.**

If you need assistance in completing the form, call 1-800-PTO-9199 and select option 2.

PTO/AIA/08 (06-12)
Approved for use through 01/31/2014. OMB 0651-0032
U.S. Patent and Trademark Office; U.S. DEPARTMENT OF COMMERCE
Under the Paperwork Reduction Act of 1995, no persons are required to respond to a collection of information unless it contains a valid OMB control number.

DECLARATION — Utility or Design Patent Application

Direct all correspondence to:	■ The address associated with Customer Number:	51417	OR	☐ Correspondence address below

Name		
Address		
City	State	Zip
Country	Telephone	Email

WARNING:

Petitioner/applicant is cautioned to avoid submitting personal information in documents filed in a patent application that may contribute to identity theft. Personal information such as social security numbers, bank account numbers, or credit card numbers (other than a check or credit card authorization form PTO-2038 submitted for payment purposes) is never required by the USPTO to support a petition or an application. If this type of personal information is included in documents submitted to the USPTO, petitioners/applicants should consider redacting such personal information from the documents before submitting them to the USPTO. Petitioner/applicant is advised that the record of a patent application is available to the public after publication of the application (unless a non-publication request in compliance with 37 CFR 1.213(a) is made in the application) or issuance of a patent. Furthermore, the record from an abandoned application may also be available to the public if the application is referenced in a published application or an issued patent (see 37 CFR 1.14). Checks and credit card authorization forms PTO-2038 submitted for payment purposes are not retained in the application file and therefore are not publicly available. Petitioner/applicant is advised that documents which form the record of a patent application (such as the PTO/SB/01) are placed into the Privacy Act system of records DEPARTMENT OF COMMERCE, COMMERCE-PAT-7, System name: *Patent Application Files*. Documents not retained in an application file (such as the PTO-2038) are placed into the Privacy Act system of COMMERCE/PAT-TM-10, System name: *Deposit Accounts and Electronic Funds Transfer Profiles*.

LEGAL NAME OF SOLE OR FIRST INVENTOR:

(*E.g.*, Given Name (first and middle (if any)) and Family Name or Surname)

Jonathan S. Steuer

Inventor's Signature	Date (Optional)

Residence: City NEW YORK	State NEW YORK	Country USA

Mailing Address

72 E 3RD ST APT 2B

City NEW YORK	State NY	Zip 10003-0206	Country USA

☐ Additional inventors are being named on the 1 supplemental sheet(s) PTO/AIA/10 attached hereto

PTO/AIA/10 (08-12)
Approved for use through 01/31/2014. OMB 0651-0032
U.S. Patent and Trademark Office; U.S. DEPARTMENT OF COMMERCE
Under the Paperwork Reduction Act of 1995, no persons are required to respond to a collection of information unless it contains a valid OMB control number.

SUPPLEMENTAL SHEET FOR DECLARATION | **ADDITIONAL INVENTOR(S)** Supplemental Sheet (for PTO/AIA/08,09) Page 3 of 3

Legal Name of Additional Joint Inventor, if any:

(E.g., Given Name (first and middle (if any)) and Family Name or Surname)

Christopher W. Otto

Inventor's Signature			Date (Optional)
Residence: City San Francisco	State CA	Country USA	
Mailing Address 894 Guerrero St			
City San Francisco	State CA	Zip 94110	Country USA

Legal Name of Additional Joint Inventor, if any:

(E.g., Given Name (first and middle (if any)) and Family Name or Surname)

Inventor's Signature			Date (Optional)
Residence: City	State	Country	
Mailing Address			
City	State	Zip	Country

Legal Name of Additional Joint Inventor, if any:

(E.g., Given Name (first and middle (if any)) and Family Name or Surname)

Inventor's Signature			Date (Optional)
Residence: City	State	Country	
Mailing Address			
City	State	Zip	Country

This collection of information is required by 35 U.S.C. 115 and 37 CFR 1.63. The information is required to obtain or retain a benefit by the public which is to file (and by the USPTO to process) an application. Confidentiality is governed by 35 U.S.C. 122 and 37 CFR 1.11 and 1.14. This collection is estimated to take 21 minutes to complete, including gathering, preparing, and submitting the completed application form to the USPTO. Time will vary depending upon the individual case. Any comments on the amount of time you require to complete this form and/or suggestions for reducing this burden, should be sent to the Chief Information Officer, U.S. Patent and Trademark Office, U.S. Department of Commerce, P.O. Box 1450, Alexandria, VA 22313-1450. DO NOT SEND FEES OR COMPLETED FORMS TO THIS ADDRESS. **SEND TO: Commissioner for Patents, P.O. Box 1450, Alexandria, VA 22313-1450.**

If you need assistance in completing the form, call 1-800-PTO-9199 (1-800-786-9199) and select option 2.

ABSTRACT

Media monitoring and measurement systems and methods are disclosed. Some embodiments of the present invention provide a media measurement system and method that utilizes audience data to enhance content identifications. Some embodiments analyze media player log data to enhance content identification. Other embodiments of the present invention analyze sample sequence data to enhance content identifications. Other embodiments analyze sequence data to enhance content identification and/or to establish channel identification. Yet other embodiments provide a system and method in which sample construction and selection parameters are adjusted based upon identification results. Yet other embodiments provide a method in which play-altering activity of an audience member is deduced from content offset values of identifications corresponding to captured samples. Yet other embodiments provide a monitoring and measurement system in which a media monitoring device is adapted to receive a wireless or non-wireless audio signal from a media player, the audio signal also being received wirelessly by headphones of a user of the monitoring device.

CLAIMS

What is claimed is:

1. A media measurement method comprising:

using one or more computers to generate a play stream of content identification results corresponding to a sequence of submitted data samples, the submitted data samples corresponding to video data samples captured at a monitoring device associated with a monitored audience member; and

using one or more computers to utilize sample sequence data and content offset data to deduce play-altering actions of the monitored audience member, the sample sequence data corresponding to a sequence of the content identification results.

2. The method of claim 1, wherein

the content offset data including content offsets associated with the content identification results, a content offset indicating a time position of a content identification result within identified content, wherein to utilize comprises, for a particular plurality of submitted data samples and corresponding content identification results, comparing a progression of log times associated with capture timing of each of the particular plurality of submitted data samples and a progression of content offsets of the corresponding content identification results.

3. The method of claim 2 further comprising:

generating a play list including content offset data as part of deducing media play-altering actions of a monitored audience member.

4. The method of claim 2 further comprising:

utilizing sample sequence data together with corresponding channel data to deduce play-altering actions of a monitored audience member.

5. The media measurement method of claim 2 wherein a clean play list is generated including deduced play-altering actions.

6. The media measurement method of claim 2 wherein the play stream is a raw play stream.

7. The media measurement method of claim 2 wherein the play stream is a clean play stream.

8. The method of claim 2 wherein to utilize further comprises determining if one or more discontinuities exist in the progression of content offsets.

9. The method of claim 2 wherein the content offset data is derived from a comparison conducted by a computerized content identification system comparing the submitted data samples against known content such that content offset data is obtainable without using time codes accompanying the captured video data samples.

10. A media measurement method comprising:

using one or more computers to generate a play stream of content identification results corresponding to a sequence of submitted data samples, the

submitted data samples corresponding to video data samples captured at a monitoring device associated with a monitored audience member; and

using one or more computers to utilize sample sequence data and content offset data to deduce play-altering actions of the monitored audience member, the sample sequence data corresponding to a sequence of the content identification results, wherein play-altering actions include actions that alter at least one of a pace and a sequence of a media stream, the content offset data including content offsets associated with the content identification results, a content offset indicating a time position of a content identification result within identified content, wherein to utilize comprises, for a particular plurality of submitted data samples and corresponding content identification results, comparing a progression of log times associated with capture timing of each of the particular plurality of submitted data samples and a progression of content offsets of the corresponding content identification results.

11. The method of claim 10 wherein play-altering actions include at least one of fast forwarding, rewinding, and pausing a media stream.

12. The method of claim 10 wherein play-altering actions include at least one of skipping forward and skipping backward in a media stream.

MEDIA USAGE MONITORING AND MEASUREMENT SYSTEM AND METHOD

Inventors: Jonathan S. Steuer
Christopher W. Otto

CROSS REFERENCE TO RELATED APPLICATIONS

[0001] This is a divisional of U.S. Patent Application No. 14/175,811, filed February 7, 2014, which is a continuation of U.S. Patent Application No. 13/914,870, filed June 11, 2013, which is a continuation of U.S. Patent Application No. 12/954,604, filed November 24, 2010, which is a divisional of U.S. Patent Application No. 11/139,330, filed May 26, 2005, which claims priority to U.S. Provisional Patent Application No. 60/574,836, entitled, "Open-ended device-independent media usage monitoring and measurement system," filed May 27, 2004. The contents of these applications is incorporated herein by reference.

BACKGROUND

[0002] Traditional media measurement systems have focused on directly monitoring channels being utilized by audience members. However, as media consumption patterns have become more complex, channel-centric media measurement is inadequate for many purposes. It may be desirable to track usage of particular media content independent of channel. Furthermore, although "channel" identification in a traditional media measurement system may sometimes be limited to radio or television broadcast station, it is increasingly desirable to track usage of media across several types of media delivery vehicles including radio, television, CD, DVD, computer download, portable media players (e.g. MP3 players, iPod), and other vehicles. Furthermore, with respect to tracking consumption of advertisements, it may be inadequate to simply track channel tuning, because, for example, an audience

member may mute a broadcast during commercial periods. Thus simply identifying a broadcast channel does not adequately track whether the audience member listened to a particular advertisement.

[0003] Some media measurement systems have used codes to "tag" and track particular content. However, such systems are limited in that they can only track content that has been properly encoded.

[0004] With the development of more robust content recognition technologies, some content recognition systems have recently been deployed which do not rely on codes. For example, Philips, Shazam Entertainment, and others have marketed systems for identifying songs played into a mobile phone. Although such systems can be efficiently deployed in the context of song recognition, deploying such systems in the context of media measurement systems poses particular challenges. Continuous searching against a large database of media content can be computationally intensive. Furthermore, such systems, while increasingly robust, still return some erroneous results, particularly in high-noise environments.

[0005] At the same time, the media measurement context provides opportunities to utilize data exogenous to a particular audio or video data sample. Such opportunities have thus far been insufficiently exploited for the purpose of efficiently applying existing content recognition technologies in the media measurement context. Thus, an improved media measurement system and method is needed.

SUMMARY

[0006] Some embodiments of the present invention provide a media measurement system and method that enhances recognition (e.g. in terms of accuracy or efficiency) of the content of a media sample by analyzing information exogenous to the sample. Some embodiments of the present invention provide a

media measurement system and method that utilizes audience data to enhance content identifications. Some embodiments analyze media player log data to enhance content identification. Other embodiments of the present invention analyze sample sequence data to enhance content identifications. Other embodiments analyze sequence data to enhance content identification and/or to establish channel identification. Yet other embodiments provide a system and method in which sample construction and selection parameters are adjusted based upon identification results. Yet other embodiments provide a method in which play-altering activity of an audience member is deduced from content offset values of identifications corresponding to captured samples. Yet other embodiments provide a monitoring and measurement system in which a media monitoring device is adapted to receive a wireless or non-wireless audio signal from a media player, the audio signal also being received wirelessly by headphones of a user of the monitoring device.

BRIEF DESCRIPTION OF THE DRAWINGS

[0007] The novel features of the invention are set forth in the appended claims. However, for purpose of explanation, several aspects of particular embodiments of the invention are described by reference to the following figures.

[0008] **Figure 1** illustrates an exemplary media usage monitoring and measurement system in accordance with aspects of an embodiment of the present invention.

[0009] **Figure 2** illustrates a media measurement method in accordance with aspects of an embodiment of the present invention.

[0010] **Figure 3** illustrates a process for using and generating information such as that illustrated in **Figure 4** and **Figure 5** and **Figure 3** illustrates an embodiment consistent with aspects of the present invention.

[0011] **Figure 4** illustrates a raw play stream generated by a process such as step 207 of **Figure 2**; a clean play stream and clean play list generated by a scrubbing step such as step 209 of **Figure 2** or steps 301, 302, or 305 of **Figure 3**; and channel data associated with two channels.

[0012] **Figure 5** illustrates a clean play stream, clean play list, channel data, and a clean play list showing deduced play-altering actions. The illustrated data may be generated by systems and methods in accordance with an embodiment of the present invention such as, for example, system 100 of **Figure 1** method 200 of **Figure 2**, and method 300 of **Figure 3**.

[0013] **Figure 6** illustrates timeline structure for data samples generated by system and methods such as module 121 of **Figure 1** and steps 201 and 206 of **Figure 2**.

[0014] **Figure 7** shows an example of a computer system that may be used to execute instruction code contained in a computer program product, the computer program product being in accordance with an embodiment of the present invention.

DETAILED DESCRIPTION

[0015] The following description is presented to enable any person skilled in the art to make and use the invention, and is provided in the context of particular applications and their requirements. Various modifications to the exemplary embodiments will be readily apparent to those skilled in the art, and the generic principles defined herein may be applied to other embodiments and applications without departing from the spirit and scope of the invention. Thus, the present invention is not intended to be limited to the embodiments shown, but is to be accorded the widest scope consistent with the principles and features disclosed herein.

[0016] **Figure 1** illustrates an exemplary media usage monitoring and measurement system 1000. System 1000 includes media measurement system 100 and monitoring devices 101 in accordance with aspects of an embodiment of the present invention.

[0017] As illustrated, monitoring device 101a includes a microphone 105, a media player port 102, a headphone port 103, and a data upload port 104. A monitored audience member wears monitor 101a during a monitoring period. When the audience member is consuming media from media player 170a without the use of headphones 160a (i.e. if media player 170a has a speaker), monitor 101 captures audio energy acoustically through microphone 105. However, when the audience member desires to use headphones 160a to receive media content from media player 170a (e.g. an MP3 player, iPod, CD player, DVD player, television, radio, computer, or other media player) he or she can plug headphones 160a into headphone port 103 and plug media player 170a into media player port 102. In that case, monitor 101a captures audio energy through media player port 102. Microphone 105 includes a microphone and associated microphone port. However, in alternatives, a monitor may simply have a microphone port into which a microphone may be plugged or linked via wireless connection. Thus the term "microphone port" will herein refer to any electronics capable of receiving energy captured through a microphone, whether or not a microphone is built into the monitoring device itself.

[0018] As another example, headphones 160b are adapted to receive a content signal 171 via wireless transmission 171 from media player 170b. Monitor 101b is adapted to receive the same content signal 171 from media player 170b. In some embodiments, a syncing process allows monitor 101b to adapt along with headphones 160b and media player 170b to changes in signal 171 so that monitor 101b continues to receive the same signal as headphones 160b. In some embodiments, syncing may be accomplished via a wireless and/or automatic

process, such as providing a monitor that responsively changes tuning based on tuning changes between the media player and the headphones.

[0019] Audio data captured by monitors 101, along with associated monitor data (e.g. device ID) (collectively, "audio data /monitor data" 144) may be uploaded to system 100 through upload port 104, directly, via memory device transfer (e.g. flash memory card, floppy disk, CD, etc.) or through a network such as network 150. The audio data uploaded from a monitor 101 may be raw audio data, or may be audio data that has undergone one of a variety of levels of processing prior to upload. For example, the uploaded audio data may include parameters useable to calculate audio signatures (sometimes referred to as audio fingerprints) and landmarks or other values useful in the content recognition process. Alternatively, the audio data may comprise pre-calculated signatures, landmarks, or other data useful for content recognition. On the other hand, in some embodiments, the uploaded audio data may simply represent a raw signal corresponding to audio energy received at monitor 101.

[0020] System 100 is adapted to receive some audience data 143 externally. For example, audience data collected by systems and associated monitors other than those of system 1000 may be utilized by system 100; data based on externally collected and/or externally analyzed demographic, psychographic, or other audience related data might also be received as part of external audience data portion 143. Other audience data may be generated internally by audience data processing module 123 alone or in combination with measurement analysis module 129 and/or other system components.

[0021] Also, system 100 is adapted to receive media player log data 146. Media player log data 146 may be generated by a media player such as media player 170a or 170b and sent to system 100 through direct connection, memory device transfer or via network 150. Also, a third party might collect such log data which then may be made available through direct connection, memory

device transfer, or via network 150. Media player log data 146 includes data logging content played on the media player from which the log data was generated. Although log data 146 does not necessarily reflect what content was actually heard, to the extent the media player generating the log data is used primarily by the audience member associated with the corresponding monitor 101, it can provide a useful basis for initial testing of captured content as will be described further below.

[0022] System 100 is also adapted to receive known content 141 and content meta data 142. Content 141 may include media files associated with a known piece of media content (e.g. a song, movie, commercial, television show, video game, etc.). However, it will be understood by those skilled in the art that "content" in the sense of the known content 141 received by system 100 may, in some embodiments, simply refer to data about signals representing the content and does not necessarily refer to a stored version of the media content itself; e.g. "content" may be stored signatures and landmarks derivable from a song's audio, but not necessarily an audio file useable to play the song itself. On the other hand, in other embodiments, a system such as system 100 may be adapted to receive a useable audio file and then derive data from that file such as signatures, fingerprints, landmarks, etc. that may be readily searched during the content recognition process. Content meta data 142 includes various data relating to content 141. For example, a portion of content 141 might include a particular song as recorded by a particular artist. Corresponding content meta data 142 for that song might include the various albums or other collections in which that song appears; various radio broadcasts (including station and broadcast times) playing the song; movies, advertisements or video games including the song; other songs that have sampled the song; and various other related information. In the context of a television program, meta data also might include, for example, segment identifications and corresponding time lengths. By distinguishing content data from content meta data in this manner,

it is possible to store content data for a single content ID only once, and then add various pieces of meta data as appropriate. For example, a TV program, or program segment, might initially have meta data relating to particular broadcasts. However, at a later date, meta data might be added relating to, for example, a DVD version of the program, without needing to store the program content itself more than once.

[0023] Turning to the details of system 100, audio data and monitor data (e.g. device ID) is received at sample control processing module 121. Module 121 provides monitor data, portions of which might be audience data, to processing module 123. Module 121 also divides the audio data into samples and determines which samples should be submitted for further content recognition testing. In alternative embodiments, the audio data may already have been divided into samples prior to receipt by system 100 (e.g. at monitor 101). In such alternatives, a module such as module 121 might either use the provided divisions or combine the data and then re-divide it into samples as determined by the system. Module 121 may be used either to submit a sample to initial test and filtered search module 122 or to content recognition system 124.

[0024] Initial test and filtered search module 122 conducts one or more initial identification attempts. Several different types of initial identification attempts might be performed. Module 122 may test a captured sample against content associated with the most recently identified content. As another possible initial test, module 122 may test the sample against content identified from a media player log file. Another initial identification test may be carried out in a variety of ways. For example, filtered search module 122 might use audience data from audience data processing module 123 to form parameters and then pass those parameters to content recognition system 124 which then uses the parameters to conduct a filtered search of its content. Alternatively, module 122 might be adapted to utilize an instance of content recognition system 124 that includes content pre-selected based upon relevant audience data. Some examples of

relevant audience data that may be used either to form search parameters or to construct targeted content include:

- age, gender, and other demographic information about the audience member (using the corresponding monitoring device) along with media consumption patterns of other persons sharing similar demographic characteristics
- media consumption patterns of the audience member based on questionnaire input or based on past content identifications associated with that audience member
- media consumption patterns of other audience members who have consumed other media content that has also previously been consumed by the audience member using the corresponding monitoring device
- location of the audience member (alone and/or relative to other audience members)

Of course, the above are just some examples of audience data that may be utilized by system 100.

[0025] After completing the initial identification attempt, filtered search module 122 passes the identification result to ID result module 125. If an identification has been made, the result is passed to play stream generator 126 and to sample control processing module 121. If no identification has been made, then content recognition system 124 performs a search using a larger portion of its content to identify the data sample. The result is passed to ID result module 125 which in turn passes the result to play stream generator 126 and to sample control module 121. Content recognition system 124 is adapted to implement one or more known content recognition methods that identify content by extracting parameters from a media signal and applying an algorithm to those parameters to search for a content match. Those skilled in the art will

recognize that many such methods and algorithms exist. One such example is described in U.S. patent application 09/839,476 entitled "System and Methods for Recognizing Sound and Music Signals in High Noise and Distortion" by Wang et al. and published June 27, 2002 with publication number US2002/0083060. Aspects of other such examples are described in the following published PCT applications by Koninklijke Philips Electronics N.V.: "Fingerprinting Multimedia Contents" (WO2004/044820, published May 27, 2004), "Fingerprint Extraction" (WO2004/030341 published April 8, 2004), and "Improvements in and Relating to Fingerprint Searching" (WO2004/040475 published May 13, 2004). Such distinct methods and algorithms may have varying degrees of efficiency, accuracy, and applicability to certain types of content (or different settings of a particular algorithm might have different efficiency depending on content type). Thus, in some embodiments, a system such as system 100 may intelligently select among multiple such algorithms (or multiple settings of a single algorithm) based on expected content characteristics. For example, algorithm A might be faster and more accurate at identifying silence than algorithm B, and thus a system such as system 100 of **Figure 1** having a corresponding subsystem for content recognition (such as system 124) might achieve enhanced performance by submitting a sample for processing by algorithm A rather than algorithm B if recent identification results indicate silence. Other differences corresponding to content types (e.g. speaking audio versus music audio) might also be exploited based on prior content identification results to select a most efficient recognition algorithm from a plurality of algorithms. In such an alternative, if the algorithms required different audio data parameters, a monitor might send two sets of parameters for each sample corresponding to each algorithm and then the system would select between the two sets as needed. Alternatively, the two sets of parameters might be calculated by the system based on raw audio data received from a monitoring device.

[0026] Play stream generator 126 generates a raw play stream relating a sequence of samples to content identification results (for an example of a portion of a raw play stream, see **Figure 3** and accompanying text). The raw play stream is then processed by play stream scrubber 127 which analyzes the sequence of sample identification results utilizing sequence data processing module 128. Based on analysis of sequence data and, where appropriate, analysis of audience data via interaction with audience data module 123, play stream scrubber 127 generates a clean play stream and clean play list (see **Figure 3** and accompanying text) which can then be used by measurement analysis module 129. Results of the media measurement analysis can be obtained via report generator 130.

[0027] In alternative embodiments, many of the system components and corresponding functions performed within a system such as system 100 might instead be implemented on the monitoring devices such as monitoring device 101. For example, many of the functions performed by sample control processing module 121 might instead be performed at a monitoring device. To cite but one example in more detail, if a monitoring device maintains an ongoing reciprocal connection to obtain sample identification results of a media measurement system, then the monitoring device can select which samples to send to the system for recognition analysis. The monitoring device might then also adjust parameters such as sample resolution, the length of a sample time window, and the recognition algorithm selected. This is just one example of how the illustrated embodiment might be modified to shift system components from a central system to a monitoring device. Many other such variations will be apparent to those skilled in the art.

[0028] Also, it will be understood that although **Figure 1** illustrates a particular exemplary division and relationship between "modules," the division illustrated may be readily modified without departing from the spirit and scope of the present invention. For example, in various implementations, the

illustrated modules may be combined into larger modules or the functions performed may be distributed across several modules. The term "module" and the associated illustrated division of system components is chosen for purposes of ease of description only and does not limit how particular systems consistent with the present invention might be constructed.

[0029] **Figure 2** illustrates a media measurement method 200 in accordance with aspects of an embodiment of the present invention. One or more elements of method 200 may be carried out, for example, by system 100 of **Figure 1** or other similar systems. At step 201, method 200 receives audio data from a monitoring device. Step 201 caches a series of samples and determines the sample resolution with which samples are submitted for content identification. In particular, as described further below (see **Figure 4** and accompanying text), sample resolution refers to how many samples in a given sequence of samples are processed for content identification. Step 201 also determines length, or "time window" of each sample.

[0030] At step 210, characteristics of the audio data are analyzed to attempt to identify the source of transmission or storage of the media played by an individual based on audio characteristics of that signal. For example, the process attempts to recognize particular types of encoding or compression, or identifies sound associated with screen refresh on a television or computer monitor, or recognizes compression or frequency range of FM or AM radio, or CD or DVD. If the storage or transmission medium is identified, the results of step 210 can be added to a play list and / or utilized in step 211 to identify channel (see below for further description of step 211).

[0031] At step 202, identification of a sample in a series of samples is attempted via initial test methods. In particular, step 202 determines whether the audio data in the tested sample matches data associated with the content ID corresponding to the most recently identified sample. Step 202 may also or

instead test the sample against content IDs obtained using data from a media player log file associated with the audience member using the corresponding media monitor. Step 203 determines whether successful identification occurred at step 202. If yes, then the identification result is provided to step 206 and 207. If no, then step 204 searches for a content match against targeted content selected based at least in part upon additional audience data. Step 205 determines whether step 204 obtained an identification. If yes, then the identification result is provided to steps 206 and 207. If no, then step 208 searches for a content match against a larger portion of the content. With respect to steps 202, 204, and 208, there are two possible results: an identification has been made or no identification has been made. No identification at steps 202 and 204 leads to the further identification attempt at step 208. Whatever the result is at step 208 (identification or no identification) that result is passed to steps 207 and 206.

[0032] At step 206, an identification result is used to adjust sampling control and selection parameters for one or more subsequent samples. Parameters that might be adjusted include resolution, backtrack selection, sample time window, or recognition algorithm selected. For example, if a sample has been identified successfully, and the identification indicates a match with the prior sample, the sampling resolution might be decreased from 1/5 to 1/10, meaning that, in a sequence of samples, nine samples rather than four are skipped before selecting the next sample to analyze for identification. As another example, if an identification result does not match the result of the prior sample identified, then step 206 might initiate a back track analysis and select an intervening sample that has not yet been analyzed. Step 201 would then pass the sample selected from backtracking to step 202 for attempted identification. As another example, resolution might be increased when recent identification results suggest an extended period of silence or absence of known content.

[0033] As yet another example, once media content for a limited series of samples has been identified, the time window size for each sample might be decreased from, for example, 5 seconds to 3 seconds. This would mean that samples submitted for attempted identification would be shorter in length. This can create efficiencies because once the content is identified, the process needs only to detect a change in content, and this can, in some cases, be accomplished utilizing a smaller amount of audio data, thereby preserving system resources.

[0034] Adjustment of sampling parameters is described further below in the context of **Figure 5** and accompanying text.

[0035] Continuing with the description of **Figure 2**, step 207 generates a raw play stream indicating a series of samples and corresponding identification results. Step 209 scrubs the raw play stream based upon sample sequence data (described further below in the context of **Figures 3-4** and accompanying text) and based upon audience data. The resulting clean play stream may be converted to a play list listing the content captured and indicating the order in which it was captured. Step 209 attempts to identify the channel by searching known channel data to find an apparent content sequence match to the play list. If the storage or transmission medium of the captured sample has been identified at step 210, that information may be made available for step 211 and allows step 211 to use that information to filter its search of channel data (e.g., only search channel data including CD channels, or only including radio broadcast channels, etc.). If step 211 successfully identifies the channel, information such as content sequence data for the identified channel may be used by step 212 to further scrub or rescrub the play stream, particularly with respect to any apparently incorrect content identifications that could not be corrected based upon sample sequence data as utilized in step 209.

[0036] **Figure 3** illustrates a process 300 for using and generating information such as that illustrated in **Figure 4** and **Figure 5**. Some of the

functions accomplished by process 300 are similar to functions accomplished by steps 207, 209, 211, and 212 of **Figure 2**. Process 300 illustrates a more detailed example of an embodiment consistent with aspects of the present invention.

[0037] Referring to process 300, depending on available information, either a play stream is made available to step 301 or a play list is made available to step 302. Step 301 prepares a play stream for further processing necessary for channel matching by scrubbing (i.e. reviewing for missing or incorrect data) the play stream using non-channel data. Step 302 prepares a play list for further processing necessary for channel matching by scrubbing (i.e. reviewing for missing or incorrect data) the play list using non-channel data. With respect to steps 301 and 302, the non-channel data selected might be selected particularly for the purpose of better preparing the play stream or play list for a channel matching process. Step 303 receives either a raw (i.e. " not scrubbed") play stream or play list directly or receives a scrubbed play stream or play list from step 301 or 302. If necessary, step 303 converts received data to a format useful in matching to a channel (e.g. converts a play stream to a play list where a play list format is useful for channel matching, or converts a play stream or play list to a mathematical representation that is useful for channel matching).

[0038] Step 304 attempts to match the play stream or play list (or corresponding data format representing the play stream or play list) against known channel data to identify a channel (e.g., an album, samples of an album presented for marketing—e.g. on a web page—, radio broadcast, television broadcast, theater version of a movie, DVD version of a movie, etc.) associated with the elements of the play list or play stream. Step 306 determines whether a channel match was achieved. If yes, then step 305 uses channel data and non-channel data to scrub or further scrub the play stream or play list for purposes of creating a clean play list. If the play list or play stream has already been scrubbed with non-channel data in either step 301 and 302, then the play stream

or play list may not need to be further scrubbed with non-channel data at step 305. In that case, step 305 just uses channel data to further scrub the play stream or play list. However, it is possible that scrubbing the play list or play stream with non-channel data for purposes of creating data useful for channel matching will be somewhat different than doing so for purposes of creating a clean play list, thus non-channel data is referenced again in the illustration of claim 305.

[0039] If step 306 determines that a channel match was not achieved at step 304, then step 307 scrubs the play stream or play list with non-channel data to create a clean play list. Step 309 determines whether including deduced user actions on the clean play list is desired. If yes, then step 308 creates a clean play list including deduced user actions. If no, then step 310 creates the clean play list without including deduced user actions.

[0040] **Figure 4** illustrates Raw Play Stream 410 generated by a process such as step 207 of **Figure 2**; Clean Play Stream 450 and Clean Play List 490 generated by a scrubbing step such as step 209 of **Figure 2** or steps 301, 302, or 305 of **Figure 3**; Channel Data 470 and Channel Data 490. Referring to **Figure 4**, Raw Play Stream 410 itemizes a sequence of analyzed samples and relates that sequence to corresponding identification results in the content ID column. The content ID result indicates either a reference corresponding to a particular piece of content or indicates that no identification was made. The example in **Figure 4** assumes that no user play-altering activities took place and this example does not rely on content offset data in scrubbing the raw play stream to obtain a clean play list. However, note that in other examples, such as that of **Figure 5**, sample sequence data ("ssd") includes content offset data. For purposes of presenting and analyzing sample sequence data as described herein, the times in list 410 may be relative to an arbitrary value (e.g. "t_0") rather than representing an absolute time; however, in many instances, a log time will in fact indicate the actual time the sample started to be captured.

[0041] Sample sequence data may be used to "scrub" Raw Play Stream 410. By analyzing the sequence of data on Raw Play Stream, it is possible to locate and correct any identifications that are likely to be incorrect or to supply missing identifications where the system has not otherwise been able to provide an identification.

[0042] Sample sequence data can be used to derive portions of Clean Play Stream 450 from raw play list 410 in the following manner: Referring to Raw Play Stream 410, the content IDs associated with samples 1, 3, 4, 6, and 7 all indicate the same media content referenced as "song51." The content ID value associate with sample 2 indicates that no content has yet been successfully associated with that sample and the content ID value associated with sample 5 indicates "movie81." Given this pattern of sample sequence data, it is reasonable to assume that the person using the corresponding monitor listened to song51 through the time period associated with the audio data of samples 1-7, and thus, the "scrubbed" version of the play stream, i.e. Clean Play Stream 450, indicates song51 for each of samples 1-7.

[0043] Information about the sequence of content in a play stream can be used to generate a play list and identify a channel, and the identified channel data can also potentially be used to help further "scrub" a play stream. For example, the sequence of consumed content represented on Play Stream 450 is searched against known channel data (e.g. particular CD albums, broadcasts, or other particular storage or transmission media carrying a particular sequence of content). In this example, simplified for illustrative purposes, known channel data includes channel data 470, associated with channel ID "radio 35," and channel data 480, associated with channel ID "album12." Referring to channel data 470, each row relates a content ID to a start time and end time. In this example, start and end times are referenced with respect to an arbitrary start time value "C(0)." For some channels (e.g. CDs, DVDs, video games) only such arbitrary reference times will be available. For other channels (e.g. broadcasts,

concerts, etc.), absolute time might be both available and useful. However, for the purpose of the analysis illustrated in this example, times that are relative only and not necessarily absolute are sufficient.

[0044] With respect to further "scrubbing" the Raw Play Stream 410, in this example, channel data may be used to correct the apparent misidentification of sample 29. Note that the sample sequence data alone in this example does not provide a clear basis for correcting sample 29. Sample 28 is identified as "ad49," sample 29 as "song81," and sample 30 as "song 35." However, given the sequence "song21, ad49, and song35" is associated with a known sequence of the radio broadcast referenced as "radio 35," there is a basis in channel data 470 for believing that the proper content ID for sample 29 is "song35" rather than "song81." Thus, Clean Play Stream 450 indicates a change relative to Raw Play Stream 410 with respect to the content ID for sample 29. Note that a clean play stream and clean play list are not necessarily generated sequentially. For example, to the extent a channel identification and associated channel data are necessary to "scrub" a raw play stream, portions of a clean play list may be determined as part of obtaining data necessary to make channel selection. In the present example, "radio 35" is identified based on a particular content sequence, and that information helps populate Clean Play Stream 450 with a corrected content ID value for sample 29 relative to the sample 29 content ID value on Raw Play Stream 410.

[0045] Audience data may also be used in the "scrubbing" process. For example, if "song81" is radically different from the user's known consumption habits and "song35" is within the user's known consumption habits, another basis might be provided for suspecting that "song35" rather than "song81" is the correct content ID for sample 29 of Play Stream 410.

[0046] It will be understood by those skilled in the art that in the context of data sets that might, in alternative examples, make up a "raw play stream," "a

clean play stream," or a "clean play list," the particular organization, division, and content of the data may vary considerably from that illustrated in **Figure 4** (as well as that illustrated in **Figure 5** below) without departing from the spirit and scope of the present invention. To cite but one example, such play streams and/or play lists might include several data fields in addition to those illustrated. Moreover, the illustrated data sets might not be collected in the same table but, depending upon database architecture, might be spread out in different tables and/or relational structures. Furthermore, the data sets similar to those illustrated might not be stored at all in a database but rather might be generated on the fly and then discarded as mere intermediate steps to generating a particular report that the system is asked to produce. These and other variations will be readily apparent to those skilled in the art. The examples shown are chosen primarily for usefulness in illustrating aspects of a particular embodiment. While they are useful in illustrating certain underlying principles of certain aspects of the present invention, they should not be considered, in and of themselves, to limit the scope of the invention.

[0047] **Figure 5** illustrates Clean Play Stream 510, Clean Play List 560, Channel Data 570, and Clean Play List 590 showing deduced play-altering actions. The illustrated data may be generated by systems and methods in accordance with an embodiment of the present invention such as, for example, system 100 of **Figure 1** method 200 of **Figure 2**, and method 300 of **Figure 3**. Aside from the traditional time shifting activity of, for example, recording a television broadcast and playing it at a later time, various play-altering activities may be undertaken by an audience member. For example a media player may be paused, reversed, fast forwarded, and some media players have modes in which skipping back or forward in played content can occur almost instantly, including within the smallest time division useful for a particular data set (e.g., less than five seconds, less than one second, etc.). Generally, these activities of manipulating the pace and order in which media is consumed will be

referenced as audience play-altering actions or activities. These activities may be deduced, for example, during scrubbing step 209 of **Figure 2**, or, as illustrated more expressly, during step 308 of **Figure 3**.

[0048] Continuing with the description of **Figure 5**, Play Stream 510 presents a series of log times, content IDs, and content offsets. In the illustrated example, times given in the log time column begins with t_0 and ends with t_0+19. Each log time indicates a time at which capture of the analyzed sample began, where t_0 simply represents a beginning time for samples on Play Stream 510. Each content ID indicates an identifier of the content that has been identified as corresponding to the captured sample. In the example illustrated, "TV program 27" refers to a TV program segment and "TV program 28" refers to another program segment of the same program. "Ad23" and "ad25," on the other hand, refer to separate advertisements. Each content offset value represents a time offset from the beginning of a particular piece of content. For example, row 8 of Play Stream 510 corresponds to a sample whose beginning is located 9 time units from the beginning of TV program 27, thus the content offset is referenced as (0)+9.

[0049] Play List 560 contains a row for each internally continuous media consumption event. The start log time and end log time for each such event are listed in each row. If an entire piece of content (e.g. a TV program segment, or an entire TV ad) is listened to without interruption, that would correspond to a row of Play List 560. On the other hand, if the data from Play Stream 510 suggests a discontinuity within consumption of a particular piece of content, such discontinuities form boundaries between consumption events that form rows of List 560. The meaning of these concepts may be clarified by discussing further details of the illustrated example.

[0050] Discontinuities in consumption of the identified media may be identified by comparing the progression of sample log times to progression of

corresponding content offset times in Play Stream 510. For example, referring to rows 7 and 8 of play stream 510, log times progress from t_0+6 to t_0+7; however, the corresponding content offsets progress, with respect to the start of TV program 27, from (0)+3 to (0)+9. Had the media consumption from one sample to the next been continuous, one would expect that the second offset value (in row 8) would have been (0)+4 rather than (0)+9. Therefore, a boundary between media consumption events can be deduced. Thus, rows 3 and 4 of List 560 indicate two consumption events with respect to the same piece of media content (TV program 27). By contrast, row 1 and row 2 of Play Stream 510 are, on Play List 560, collapsed into a single row (row 1) because the content offset progression from row 1 to row 2 of Play Stream 510 suggests continuous consumption of the same piece of media content.

[0051] Referring to Play List 560, the "end log time" of one event also defines the "start log time" of the next event. In other examples, particularly if continuous time is not assumed, a play list might be constructed using start log times that are different than the end log time of the previous consumption event.

[0052] Referring to Clean Play List With Deduced Actions 590, it can be seen that a play list can be constructed that supplements the information in Play List 560 with information about the apparent actions of the audience member. Rows 2, 4, 6, 8, and 11 of List 590 include such information about deduced actions.

[0053] To the extent such play-altering actions occur within the same piece of content, audience member actions may be deduced without content sequence data for a particular channel. For example, referring to rows 2, 3, 4, 5, and 6, of Play Stream 510, the content offset values of rows 2 and 6 indicate advancing for one time unit within TV program 27 while no content ID (or corresponding offset value) is available for rows 3-5. From this information, and the fact that log times of rows 3-5 together correspond to progression through three time units, it is reasonable to deduce that the audience member paused a media player for

three time units from log time t_0+2 to log time t_0+5. That deduced action is recorded in row 2 of Play List 590.

[0054] On the other hand, in other contexts, it may be necessary to refer to content sequence data for a particular channel to be sufficiently confident in deducing the details of an audience member's play-altering activity. For example, referring to Play Stream 510, data in rows 15-17 indicate one or more consumption discontinuities in which a play-altering action appears to have crossed a content boundary. Row 15 indicates consumption of the beginning of ad23; row 16 indicates no identified content, and row 17 indicates consumption of ad24 from a point two time units after the beginning of that ad. From this information alone, it is difficult or impossible to determine how much play-altering activity occurred and whether any content pieces were skipped altogether. However, content sequence data for an identified channel may be used to supplement the information gap. Data 570 lists content sequence data for a channel identified as "TV C4." "TV C4" may be identified during a method portion such as step 211 of process 200 of **Figure 2** as previously described. Channel data may be searched that includes the content identified in Play Stream 510 or Play List 560. A channel whose content sequence matches or closely matches content on such a stream or play list may be identified as the channel that delivered the consumed content. In this case, Play Stream 510 and Play List 560 include content associated with the following IDs: TV program 27, ad23, ad25, and TV program 28. Because channel data for "TV C4" indicates a sequence of: TV program 27, ad23, ad24, ad25, and TV program 28, for purposes of this example, it can reasonably be assumed that the media depicted on Stream 510, List 560, and List 590 was originally delivered to the relevant media player by channel "TV C4." In real world contexts, however, it is quite possible that more data would have to be obtained (e.g. a matching more entries on a play list entries against a longer series of content sequence data of a channel) in order to be reasonably confident that the channel has been correctly

identified. The amount of data matched in the illustrated example has been chosen primarily for ease of illustration.

[0055] Sequence Data 570 for channel TV C4 indicates that ad23 as broadcast lasted three time units (see row 2), ad25 as broadcast lasted three time units (see row 4), and between ad23 and ad25, another ad, ad24, was broadcast and lasted three time units. From this information, and the information in either Play Stream 510 or Play list 560, it can be deduced that the audience member heard the very beginning of ad23, but then fast forwarded seven time units (during the span of 1 time unit based on the log time data) to just past the beginning of ad25. This deduced action is recorded in row 11 of List 590.

[0056] It should be noted that, to the extent actions take less than a single time unit, rows may be added to List 590 relative to List 560 to record such actions. For example, referring to row 4 of List 590, because no log time elapsed between the end of the event in row 3 and the beginning of the event in row 5, row 4 has been added showing the "skip forward 5 units." That the user "skipped" forward rather than "fast" forwarded can be deduced from the fact that while there is no content ID gap between rows 3 and 4 of List 560, there is a gap in the content offset times for those rows. Thus, though the log times and content ID alone suggest continuous consumption, the gap in offset times suggests a "skip" forward that took the same or less time than the length of a single time unit.

[0057] Those skilled in the art will recognize that the method aspects just described in the context of generating and using Stream 510, List 560, Data 570, and List With Deduced Actions 590 reflect just one example of how play-altering actions might be deduced using systems and methods consistent with those of the present invention. To cite but one example, rather than explicitly generate a play list, mathematical representations of play stream data and content sequence data may be used to identify discontinuities and deduce play-altering

activities. To cite but one other example, play-altering might be deduced from a pre-generated play list including content offset data without needing to analyzing play stream data from which the play list was generated.

[0058] **Figure 6** illustrates timeline structure for data samples generated by system and methods such as module 121 of **Figure 1** and steps 201 and 206 of **Figure 2**.

[0059] As illustrated, sample set 600 reflects a division of audio data into sixteen samples, three of which are selected for analysis. The samples selected for recognition analysis are referenced generally as the "n_0^{th}," n_1^{th}," and "n_2^{th}" samples. Samples between the selected samples are not separately numbered, but are marked off between vertical lines along the horizontal length of timelines structure 600 as illustrated. Each sample has a sample time window length "i." Furthermore, the sample set has varying "resolutions" including r_0=1/5 between the n_0^{th} and n_1^{th} samples and r_1=1/10 between the n_1^{th} and the n_2^{th} samples. In other words, "resolution" here refers to the portion of samples being selected during a period of time. In the present example, a process portion such as steps 201 and 206 of process 200 of **Figure 2** has, based on the identification results of the n_0^{th} and n_1^{th} samples, adjusted the resolution from 1/5 to 1/10. This could occur, for example, as previously described, because the n_0^{th} and n_1^{th} samples match the same content ID and process 200 determines that the likelihood that the next selected sample using a resolution of 1/5 would also match justifies decreasing the resolution to 1/10 so that the next sample selected for analysis is the n_2^{th}. However, if the n_2^{th} sample does not match the n_1^{th} sample, then process 200 can make a backtrack decision and go back in the series of samples to select, for example, the $(n_1 +6)^{th}$ sample for content recognition analysis in order to pinpoint more closely where in the play stream the content change occurred. The order in which samples are selected for analysis in this example is illustrated by arrows 1, 2, and 3 in **Figure 6**.

[0060] Although not illustrated in **Figure 6**, as previously described, steps 201 and 206 of method 200 can also determine based on identification results the time window length can be adjusted. In the context of **Figure 6**, this would correspond to changing the value of "i," the time window length of a particular sample.

[0061] In alternative embodiments to what is illustrated and described in FIGs. 1-6, a record is created of individual media usage over time by means of an open-ended measurement system that employs portable and stationary detection devices to generate digital fingerprints of the video signal portion of the media content itself and identifies media played in the environment by means of matching such fingerprints against a database of known media. Such a video-based system may be built upon direct electrical connections and optical sensors (rather than microphones). Thus, various alternatives to the exemplary methods discussed in the context of the audio data-based embodiments illustrated in FIGs. 1-6 rely instead on video data.

[0062] **Figure 7** shows an example of a computer system 700 that may be used to execute instruction code contained in a computer program product 760 in accordance with an embodiment of the present invention. Computer program product 760 comprises executable code in an electronically readable medium that may instruct one or more computers such as computer system 700 to perform processing that implements the system 100 of **Figure 1** and/or accomplishes the exemplary method 200 of **Figure 2**. The electronically readable medium may be any medium that either stores or carries electronic signals (including signals referred to as electrical signals and signals referred to as electromagnetic signals) and may be accessed locally or remotely, for example via a network connection. The executable instruction code in an electronically readable medium directs the illustrated computer system 700 to carry out various exemplary tasks described herein. The executable code for directing the carrying out of tasks described herein would be typically realized in software.

However, it will be appreciated by those skilled in the art, that computers might utilize code realized in hardware to perform many or all of the identified tasks without departing from the present invention. Those skilled in the art will understand that many variations on executable code may be found that implement exemplary methods within the spirit and the scope of the present invention.

[0063] The code or a copy of the code contained in computer program product 760 may be stored in memory 710 for execution by processor 720. Computer system 700 also includes I/O subsystem 730 and peripheral devices 740. I/O subsystem 730, peripheral devices 740, processor 720, and memory 710 are coupled via bus 750.

[0064] Those skilled in the art will appreciate computer system 700 illustrates just one example of a system in which a computer program product in accordance with an embodiment of the present invention may be implemented. To cite but one example of an alternative embodiment, execution of instructions contained in a computer program product in accordance with an embodiment of the present invention may be distributed over multiple computers, such as, for example, over the computers of a distributed computing network.

[0065] Although particular embodiments have been described in detail and certain variants have been noted, various other modifications to the embodiments described herein may be made without departing from the spirit and scope of the present invention. Thus, the invention is limited only by the appended claims.

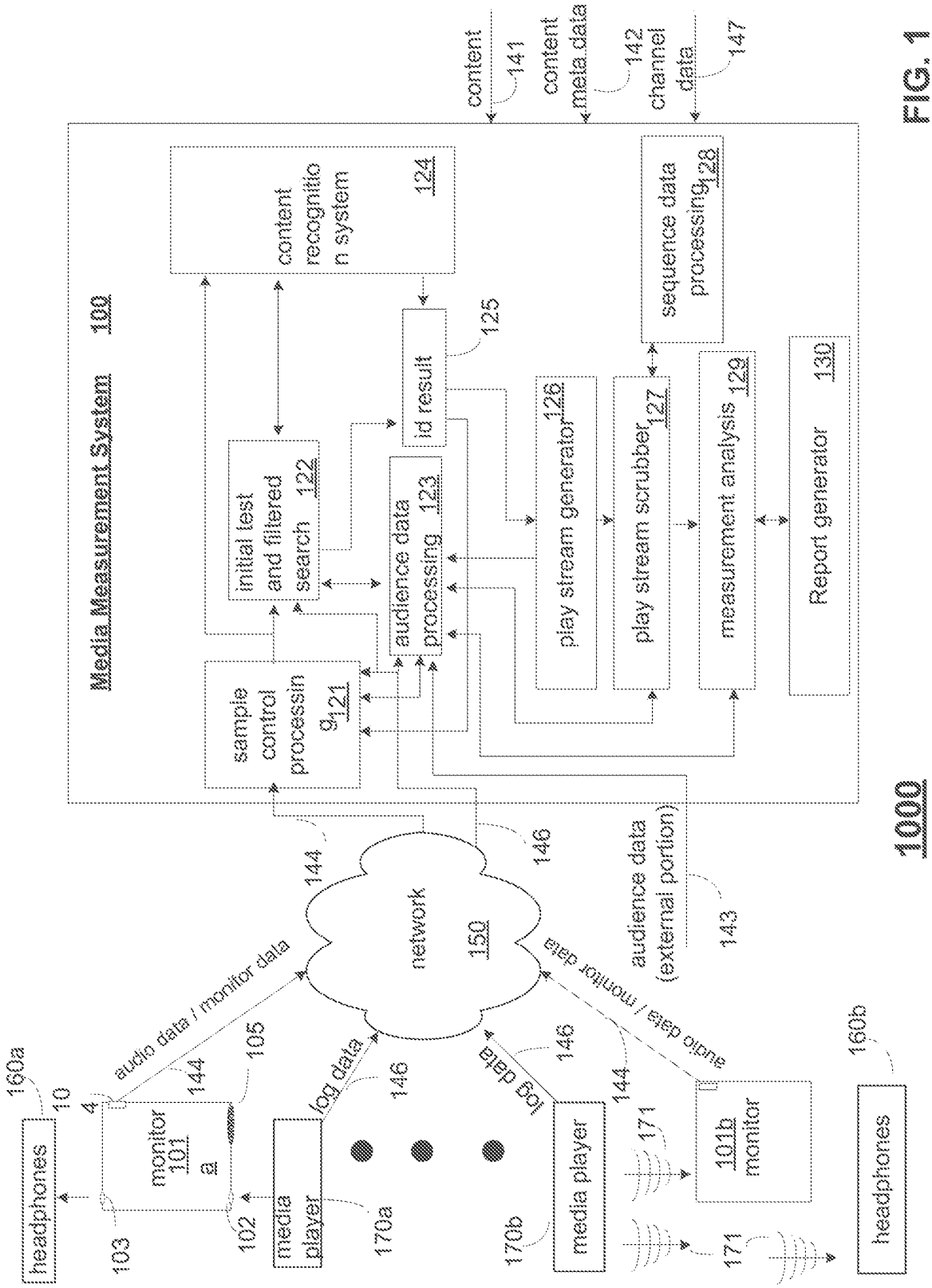
Media Measurement System 100
content recognition system 124
initial test and filtered search 122
sample control processing 121
id result 125
audience data processing 123
play stream generator 126
play stream scrubber 127
sequence data processing 128
measurement analysis 129
Report generator 130
content 141
content meta data 142
channel data 147
audience data (external portion) 143
network 150
144
146
audio data / monitor data
log data
headphones
160a
10
4
monitor 101a
105
102
103
media player
170a
170b
101b monitor
171
headphones
160b
1000

FIG. 1

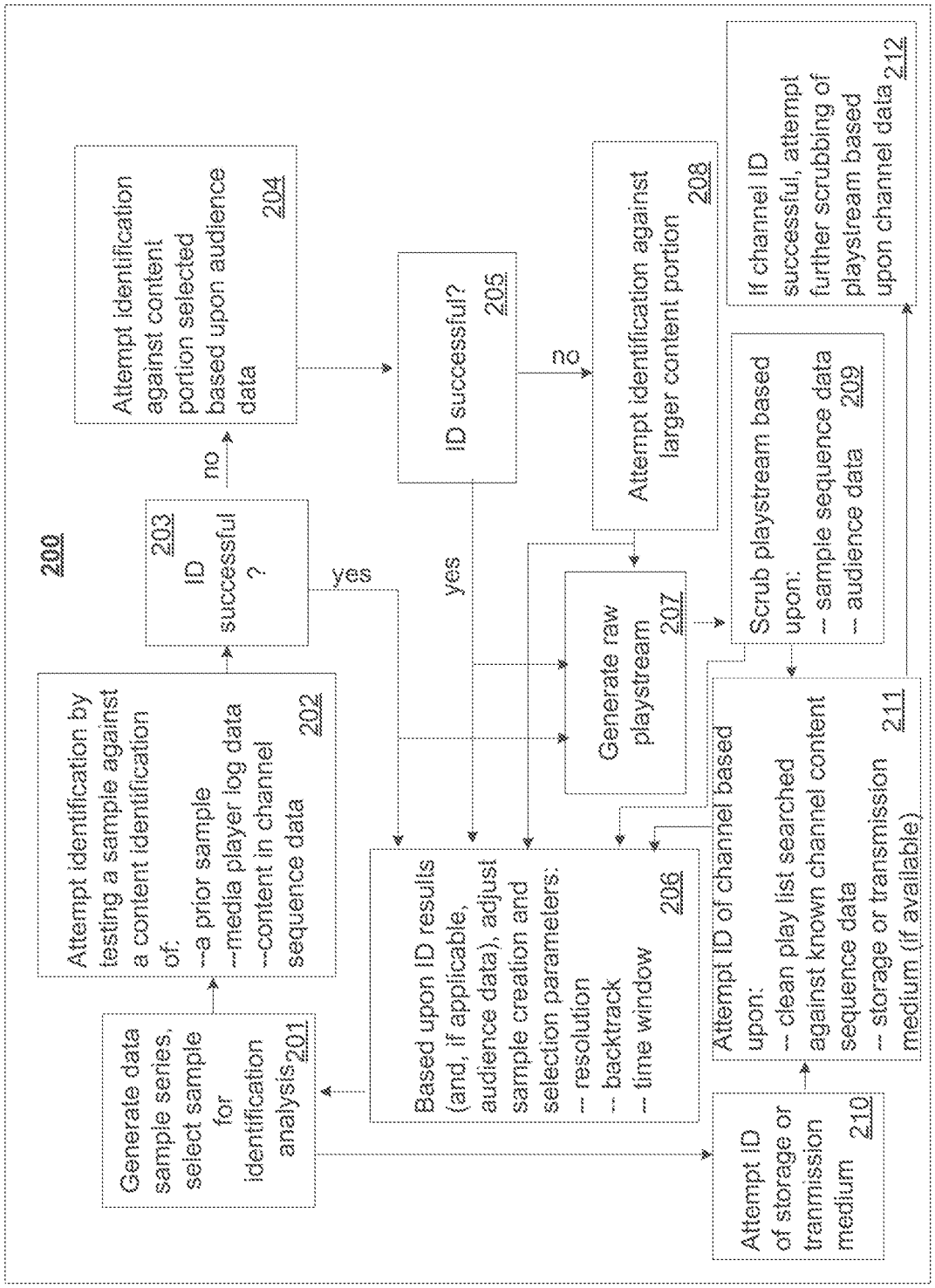
200
Generate data sample series, select sample for identification analysis 201
Attempt identification by testing a sample against a content identification of:
--a prior sample
--media player log data
--content in channel sequence data 202
203 ID successful ?
yes
no
Attempt identification against content portion selected based upon audience data 204
ID successful? 205
yes
no
Based upon ID results (and, if applicable, audience data), adjust sample creation and selection parameters:
-- resolution
-- backtrack
-- time window 206
Generate raw playstream 207
Attempt identification against larger content portion 208
Scrub playstream based upon:
-- sample sequence data
-- audience data 209
Attempt ID of storage or tranmission medium 210
Attempt ID of channel based upon:
-- clean play list searched against known channel content sequence data
-- storage or transmission medium (if available) 211
If channel ID successful, attempt further scrubbing of playstream based upon channel data 212

FIG. 2

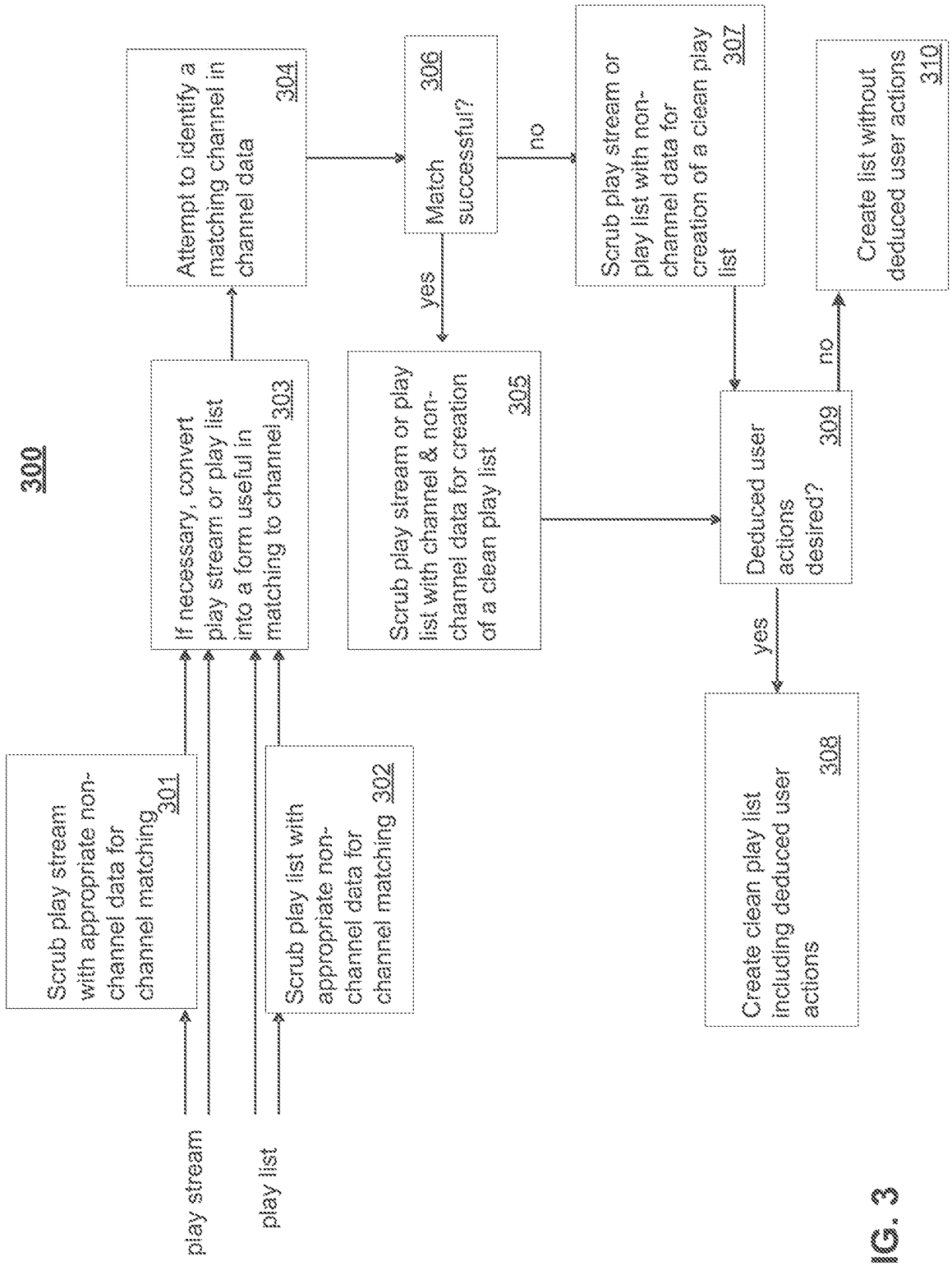
300
play stream
play list
Scrub play stream with appropriate non-channel data for channel matching 301
Scrub play list with appropriate non-channel data for channel matching 302
If necessary, convert play stream or play list into a form useful in matching to channel 303
Attempt to identify a matching channel in channel data 304
Match successful? 306
yes
no
Scrub play stream or play list with channel & non-channel data for creation of a clean play list 305
Scrub play stream or play list with non-channel data for creation of a clean play list 307
Deduced user actions desired? 309
yes
no
Create clean play list including deduced user actions 308
Create list without deduced user actions 310

FIG. 3

410

Raw Play Stream

row	log time	content ID
1	t_0	song 51
2	t_0+1	none
3	t_0+2	song51
4	t_0+3	song51
5	t_0+4	movie 81
6	t_0+5	song51
7	t_0+6	song51
8	t_0+7	song72
9	t_0+8	song72
10	t_0+9	none
11	t_0+10	song72
12	t_0+11	song72
13	t_0+12	song72
14	t_0+13	song65
15	t_0+14	song65
16	t_0+15	TVprgm58
17	t_0+16	song65
18	t_0+17	song65
19	t_0+18	song65
20	t_0+19	song65
21	t_0+20	song21
22	t_0+21	song21
23	t_0+22	song21
24	t_0+23	song21
25	t_0+24	song21
26	t_0+25	song21
27	t_0+26	ad49
28	t_0+27	ad49
29	t_0+28	song81
30	t_0+29	song35

ssd

450

Clean Play Stream

row	log time	content ID
1	t_0	song 51
2	t_0+1	song51
3	t_0+2	song51
4	t_0+3	song51
5	t_0+4	song51
6	t_0+5	song51
7	t_0+6	song51
8	t_0+7	song72
9	t_0+8	song72
10	t_0+9	song72
11	t_0+10	song72
12	t_0+11	song72
13	t_0+12	song72
14	t_0+13	song65
15	t_0+14	song65
16	t_0+15	song65
17	t_0+16	song65
18	t_0+17	song65
19	t_0+18	song65
20	t_0+19	song65
21	t_0+20	song21
22	t_0+21	song21
23	t_0+22	song21
24	t_0+23	song21
25	t_0+24	song21
26	t_0+25	song21
27	t_0+26	ad49
28	t_0+27	ad49
29	t_0+28	song35
30	t_0+29	song35

470

Channel Data for "radio 35"

row	start time	end time	content ID
1	C(0)	C(0)+6	song21
2	C(0)+6	C(0)+8	ad49
3	C(0)+8	C(0)+13	song35

480

Channel Data for "album 12"

row	start time	end time	content ID
1	C(0)	C(0)+7	song51
2	C(0)+7	C(0)+13	song72
3	C(0)+13	C(0)+23	song65
4	C(0)+23	C(0)+30	song29

490

Clean Play List

row	start log time	end log time	content ID	Channel ID
1	t_0	t_0+7	song51	album12
2	t_0+7	t_0+13	song71	album12
3	t_0+13	t_0+20	song65	album12
4	t_0+20	t_0+26	song21	radio35
5	t_0+26	t_0+28	ad49	radio35
6	t_0+28	t_0+30	song34	radio35

ssd = "sample sequence data"

FIG. 4

510

Clean Playstream

row	log time	content ID	content offset
1	t_0	TVprgm 27	(0)
2	t_0+1	TVprgm 27	(0)+1
3	t_0+2	none	n/a
4	t_0+3	none	n/a
5	t_0+4	none	n/a
6	t_0+5	TVprgm 27	(0)+2
7	t_0+6	TVprgm 27	(0)+3
8	t_0+7	TVprgm27	(0)+9
9	t_0+8	TVprgm27	(0)+10
10	t_0+9	TVprgm27	(0)+9
11	t_0+10	TVprgm27	(0)+10
12	t_0+11	none	n/a
13	t_0+12	TVprgm27	(0)+29
14	t_0+13	TVprgm27	(0)+30
15	t_0+14	ad23	(0)
16	t_0+15	none	n/a
17	t_0+16	ad25	(0)+2
18	t_0+17	TVprgm28	(0)
19	t_0+18	TVprgm28	(0)+1
20	t_0+19	TVprgrm28	(0)+2

560

Clean Play List

row	start log time	end log time	content ID	content offset
1	t_0	t_0+2	TVprgrm27	(0)
2	t_0+2	t_0+5	none	n/a
3	t_0+5	t_0+7	TVprgrm27	(0)+2
4	t_0+7	t_0+9	TVprgrm27	(0)+9
5	t_0+9	t_0+11	TVprgrm27	(0)+9
6	t_0+11	t_0+12	none	n/a
7	t_0+12	t_0+14	TVprgrm27	(0)+29
8	t_0+14	t_0+15	ad23	(0)
9	t_0+15	t_0+16	none	n/a
10	t_0+16	t_0+17	ad25	(0)+2
11	t_0+17	t_0+20	TVprgrm28	(0)

570

Channel Data for TV C4

row	start time	end time	content ID
1	C(0)	C(0)+31	TVprgrm27
2	C(0)+31	C(0)+34	ad23
3	C(0)+34	C(0)+37	ad24
4	C(0)+37	C(0)+40	ad25
5	C(0)+40	C(0)+50	TVprgrm28

590

Clean Play List with Deduced Actions

row	log time	end log time	content ID and <deduced action>	content offset
1	t_0	t_0+2	TVprgrm27	(0)
2	t_0+2	t_0+5	<pause for 3 units>	n/a
3	t_0+5	t_0+7	TVprgrm27	(0)+2
4	t_0+7	t_0+7	<skip frwrd 5 units>	n/a
5	t_0+7	t_0+9	TVprgrm27	(0)+9
6	t_0+9	t_0+9	<skip bckwrd 2 units>	n/a
7	t_0+9	t_0+11	TVprgrm27	(0)+9
8	t_0+11	t_0+12	<fast frwrd 18 units>	n/a
9	t_0+12	t_0+14	TVprgrm27	(0)+29
10	t_0+14	t_0+15	ad23	(0)
11	t_0+15	t_0+16	<fast frwrd 7 units>	n/a
12	t_0+16	t_0+17	ad25	(0)+2
13	t_0+17	t_0+20	TVprgrm28	(0)

FIG. 5

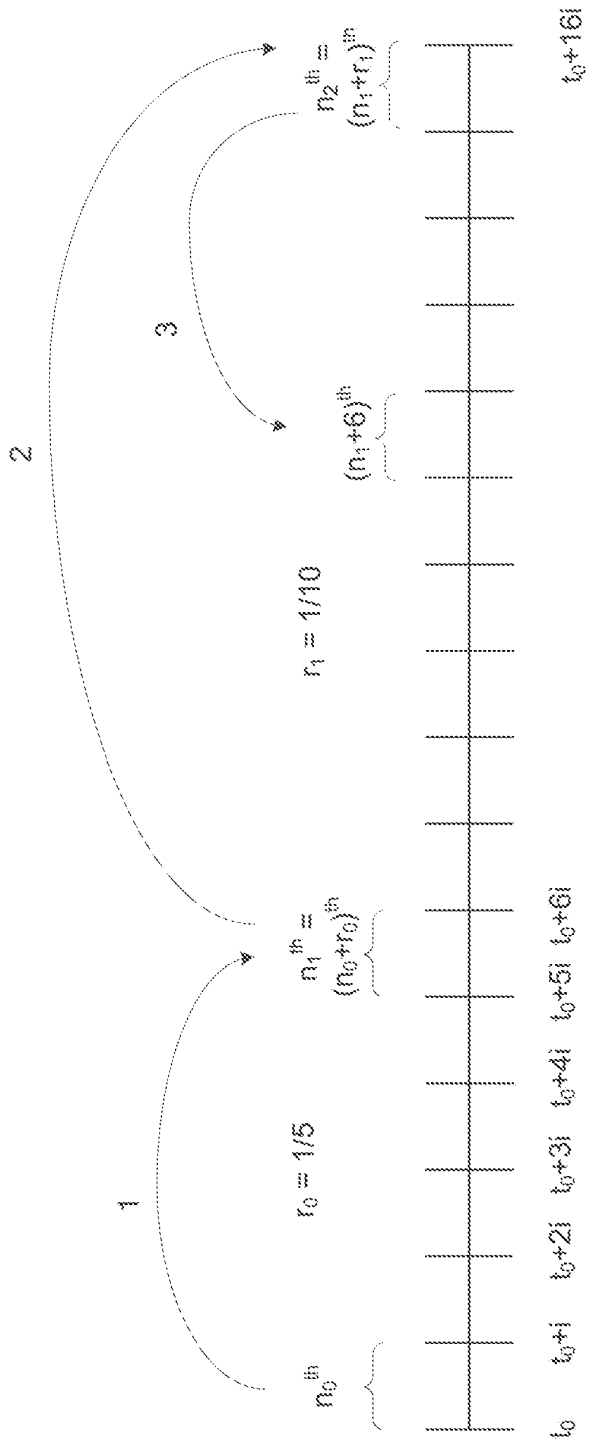
1
2
3
n_0^{th}
$r_0 = 1/5$
$n_1^{th} = (n_0+r_0)^{th}$
$n_1 = 1/10$
$(n_1+6)^{th}$
$n_2^{th} = (n_1+r_1)^{th}$
t_0
t_0+i
t_0+2i
t_0+3i
t_0+4i
t_0+5i
t_0+6i
t_0+16i

600

FIG. 6

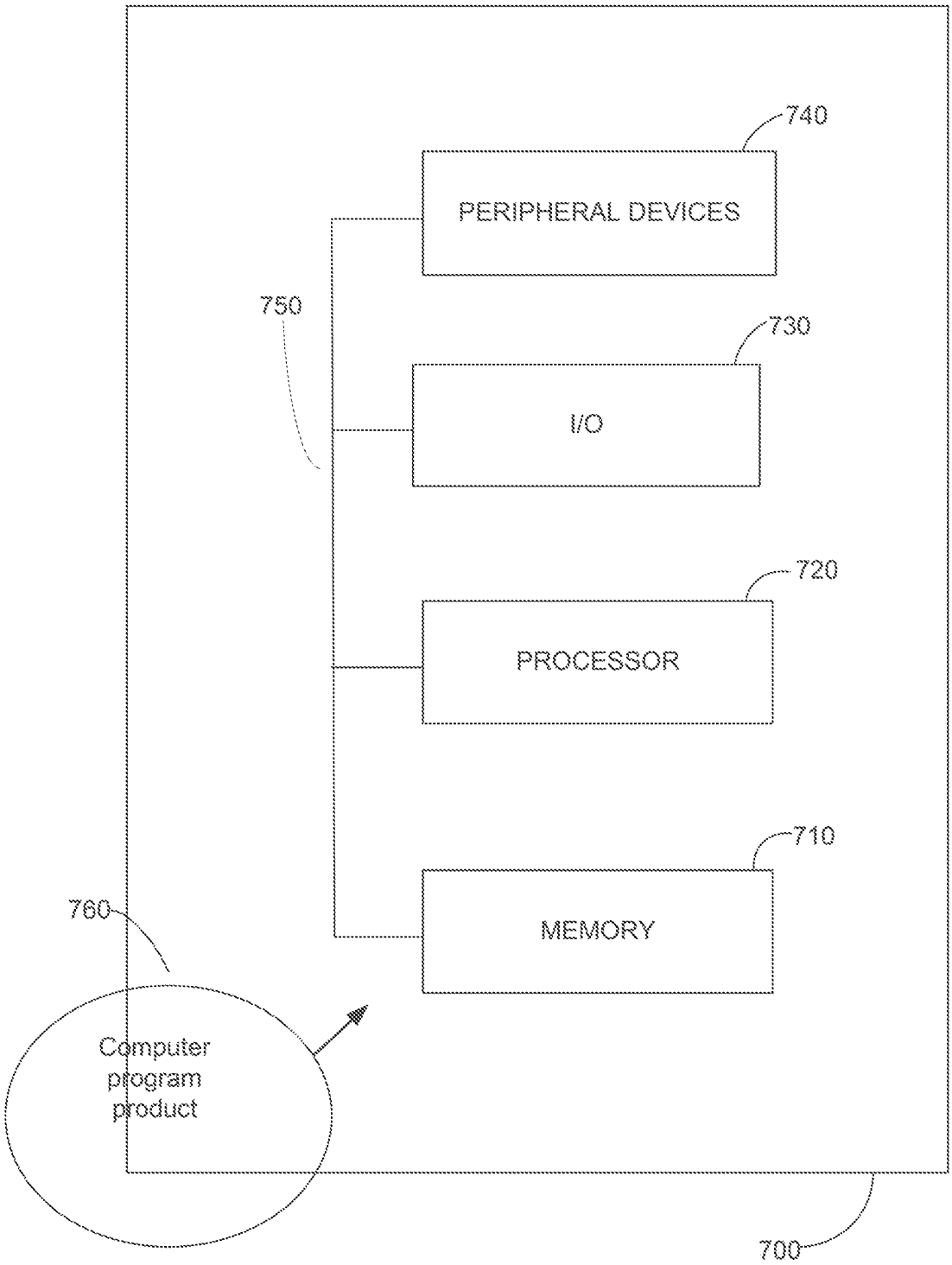
740
PERIPHERAL DEVICES
750
730
I/O
720
PROCESSOR
710
MEMORY
760
Computer program product
700

FIG. 7