(12) INTERNATIONAL APPLICATION PUBLISHED UNDER THE PATENT COOPERATION TREATY (PCT)

(19) World Intellectual Property Organization
International Bureau

(43) International Publication Date
17 June 2004 (17.06.2004)

PCT

(10) International Publication Number
WO 2004/051997 A1

(51) International Patent Classification[7]: H04N 5/781

(21) International Application Number: PCT/US2002/038012

(22) International Filing Date: 27 November 2002 (27.11.2002)

(25) Filing Language: English

(26) Publication Language: English

(71) Applicant *(for all designated States except US)*: **NIELSEN MEDIA RESEARCH, INC.** [US/US]; Nielsen Media Research, Inc., 299 Park Avenue, New York, NY 10171 (US).

(72) Inventor; and
(75) Inventor/Applicant *(for US only)*: **CONKLIN, Charles, Clinton** [US/US]; 9050 Brooker Drive, New Port Richey, FL 34655 (US).

(74) Agent: **HANLEY, Mark**; Grossman & Flight, LLC, 20 North Wacker Drive, Suite 4220, Chicago, IL 60606 (US).

(81) Designated States *(national)*: AE, AG, AL, AM, AT, AU, AZ, BA, BB, BG, BR, BY, BZ, CA, CH, CN, CO, CR, CU, CZ, DE, DK, DM, DZ, EC, EE, ES, FI, GB, GD, GE, GH, GM, HR, HU, ID, IL, IN, IS, JP, KE, KG, KP, KR, KZ, LC, LK, LR, LS, LT, LU, LV, MA, MD, MG, MK, MN, MW, MX, MZ, NO, NZ, OM, PH, PL, PT, RO, RU, SC, SD, SE, SG, SI, SK, SL, TJ, TM, TN, TR, TT, TZ, UA, UG, US, UZ, VC, VN, YU, ZA, ZM, ZW.

(84) Designated States *(regional)*: ARIPO patent (GH, GM, KE, LS, MW, MZ, SD, SL, SZ, TZ, UG, ZM, ZW), Eurasian patent (AM, AZ, BY, KG, KZ, MD, RU, TJ, TM), European patent (AT, BE, BG, CH, CY, CZ, DE, DK, EE, ES, FI, FR, GB, GR, IE, IT, LU, MC, NL, PT, SE, SK, TR), OAPI patent (BF, BJ, CF, CG, CI, CM, GA, GN, GQ, GW, ML, MR, NE, SN, TD, TG).

Published:
— *with international search report*

For two-letter codes and other abbreviations, refer to the "Guidance Notes on Codes and Abbreviations" appearing at the beginning of each regular issue of the PCT Gazette.

(54) Title: APPARATUS AND METHODS FOR TRACKING AND ANALYZING DIGITAL RECORDING DEVICE EVENT SEQUENCES

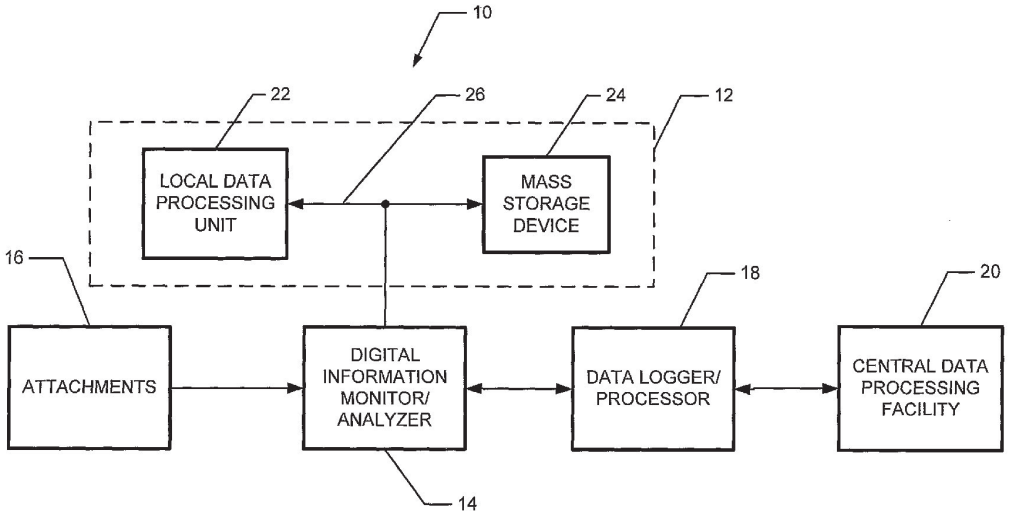

(57) Abstract: Methods and apparatus for tracking a sequence of events associated with a digital recording device (12) are disclosed. Example methods and apparatus read first information transmitted on a data bus in communication with a mass storage device (24) associated with the digital recording device (12) and identify a set of digital information to be stored on the mass storage device (24) based at least in part on the first information. The example methods and apparatus read second information transmitted on the data bus to derive storage location information associated with the set of digital information. Additionally, the example methods and apparatus store time information together with the storage location information to generate a sequence of events record corresponding to the sequence of events associated with the digital recording device (12).

WO 2004/051997 A1

AMR EX. 2021
Samsung v AMR
IPR2024-01349

APPARATUS AND METHODS FOR TRACKING AND ANALYZING DIGITAL RECORDING DEVICE EVENT SEQUENCES

FIELD OF THE DISCLOSURE

[0001] The present disclosure relates generally to digital recording devices and, more particularly, to apparatus and methods for tracking and analyzing digital recording device event sequences.

BACKGROUND

[0002] Television ratings information is typically generated by collecting viewing records or other viewing information from a group of statistically selected households. Each of the statistically selected households typically has a data logging and processing unit commonly referred to as a "home unit." The home unit is often in communication with a variety of attachments that provide inputs to the home unit or receive outputs from the home unit. For example, a source identification unit such as a frequency detector attachment, which is a well-known device, may be in communication with a television to sense a local oscillator frequency of the television tuner. In this manner, the frequency detector attachment may be used to determine if the television is operating (i.e., is turned on) and to determine to which channel the television is currently tuned based on a detected frequency. A people counter, which is also a well-known device, may be located in the viewing space of the television and in communication with the home unit, thereby enabling the home unit to detect the identities of the persons currently viewing programs displayed on the television.

[0003] The home unit usually processes the inputs (e.g., channel tuning information, viewer identities, etc.) from the attachments to produce viewing records. Viewing records may be generated on a periodic basis (i.e., at fixed time intervals) or may be

generated in response to a change in an input such as, for example, a change in the identities of the persons viewing the television, a change in the channel tuning information (i.e., a channel change), etc. In any case, each viewing record typically contains channel information such as a station or channel number and a time (e.g., a date and time of day) at which the channel was viewed. Of course, viewing records may contain other information such as the identities of viewers present at the viewing time.

[0004] Often, the home unit collects a quantity of viewing records and transmits collected viewing records, usually daily, to a central office or data processing facility for further processing or analysis. The central data processing facility receives viewing records from home units located in some or all of the statistically selected households and analyzes the viewing records to ascertain the viewing behaviors of a particular household or a particular group of households selected from all participating households. Additionally, the central data processing facility may generate viewing behavior statistics and other parameters indicative of viewing behavior associated with all of the participating households.

[0005] To generate viewing behavior information from viewing records, the central office or data processing facility compares reference data such as a list of programs (i.e., a schedule of television programming or television guide) to the viewing records. In this manner, the central office can infer which program was viewed by matching the time and channel information in a viewing record to the program associated with that same time and channel in the program schedule. Such a matching process can be carried out for each of the viewing records received by the central office, thereby enabling the central office to reconstruct what programs were

watched by all participating households and the times at which the programs were watched.

[0006] While known apparatus and techniques for ascertaining the viewing behavior of a large population are well suited for viewing records associated with live viewing of television programming, these techniques are not suitable for use with audio and video programs that are recorded and then later viewed. In particular, for pre-recorded program information, the viewing time is delayed with respect to the time at which the program information was available as a live program. As a result, viewing records containing viewing time information cannot be compared to reference program guide information at the central office to infer what programs are associated with the viewing records. Further, the tuning information available from, for example, a frequency detector attachment in communication with a television that is being used to display a previously recorded program does not provide useful tuning information. More specifically, the recorded program is typically supplied by a video recorder (e.g., a VCR) or the like that sends unmodulated low-level video and audio signals to the video and audio inputs of the television that bypass the tuner circuitry of the television.

[0007] The use of digital video recorders (DVRs) and personal video recorders (PVRs) such as the TiVo™ system further complicates collection of viewing behavior information because viewers in households with these types of recording devices can rapidly change between live viewing of a program, a somewhat delayed viewing of a program, fast forwarding and rewinding a program, pausing a program, and recording a program for later viewing while watching another program live. The use of processing techniques based on recognition of program signatures has been employed in some cases where it is difficult to obtain accurate tuning

information and in cases where it may otherwise be difficult to obtain viewing time information and channel information associated with the currently viewed program content. Unfortunately, these techniques are not well suited for use in situations where a recording device enables rapid changes between live viewing of a program, delayed viewing of the program, viewing of another program while recording the program, etc.

BRIEF DESCRIPTION OF THE DRAWINGS

[0008] Fig. 1 is a block diagram of an example system that can be used to track a sequence of events associated with a digital recording device;

[0009] Fig. 2 is a more detailed block diagram of an example digital information monitor/analyzer that may be used as the digital information monitor/analyzer shown in Fig. 1;

[0010] Fig. 3 is a detailed block diagram of another example digital information monitor/analyzer that may be used as the digital information monitor/analyzer shown in Fig. 1;

[0011] Fig. 4 is a flow diagram illustrating one example manner in which the digital video information monitor/analyzer devices shown in Figs. 1, 2 and 3 may be configured to generate event records and a sequence of events record;

[0012] Fig. 5 is a flow diagram of another example manner in which the digital information monitor/analyzer devices shown in Figs. 1, 2 and 3 may be configured to generate a sequence of events record;

[0013] Fig. 6 is a block diagram of an example header packet insertion/extraction apparatus that may be used within one or more of the digital information monitor/analyzer devices shown in Figs. 1, 2 and 3 to carry out the example method shown in Fig. 5;

[0014] Fig. 7 is a flow diagram of an example manner in which the header packet insertion/extraction apparatus shown in Fig. 6 may be used within the information monitor/analyzer devices shown in Figs. 1, 2 and 3 to generate a sequence of events record;

[0015] Fig. 8 is a block diagram of an example system that uses a digital information monitor/analyzer in conjunction with a DVR and an audience measurement unit;

[0016] Fig. 9 is a graph that depicts an example of live viewing of a video program via a DVR;

[0017] Fig. 10 is a graph that depicts an example of delayed viewing of video program via a DVR;

[0018] Fig. 11 is a graph that depicts an example relationship between view time and delay time for the paused and rewind operations of a DVR;

[0019] Fig. 12 is a graph that depicts an example relationship between view time and delay time for a fast forward operation of a DVR;

[0020] Fig. 13 is a graph of example viewing behavior associated with a DVR; and

[0021] Fig. 14 is a flow diagram of an example method that can be used by the digital information monitor/analyzer devices shown in Figs. 1, 2 and 3 to enable discrimination between initially paused operation and live viewing operation of a DVR.

DESCRIPTION

[0022] Fig. 1 is a block diagram of an example system 10 that can be used to track a sequence of events associated with a digital recording device 12. In the example of Fig. 1, the system 10 includes a digital information monitor/analyzer 14, one or more attachments 16, a data logger/processor 18 and a central data processing

facility 20. In Fig. 1, the digital recording device 12 includes a local data processing unit 22 and a mass storage device 24 that are coupled via a data bus 26.

[0023] The digital recording device 12 may be a digital video recorder (DVR) or a personal video recorder (PVR), both of which are well-known devices. A PVR is a DVR that has been configured to be automatically adaptive to or otherwise automatically responsive to the viewing preferences of a particular user or group of users within a particular household. For example, many DVRs provide a phone line connection that enables the DVR to communicate with a central service facility that receives viewer preference information from the DVR and which sends configuration information to the DVR based on those viewer preferences. The configuration information is used by the DVR to automatically configure the DVR to record video programs consistent with the preferences of the viewer or viewers associated with that DVR. TiVo™ is one well-known service that is purchased by DVR owners to provide PVR functionality to their DVRs. Although the example embodiments described herein refer to the digital recording device 12 as a DVR or PVR that records video programming, the digital recording device 12 could be any other type of digital recording device that records any desired type of digital audio information, digital video information and/or digital image information. For example, the digital recording device 12 could be a personal computer recording any type of digital information including, for example, web pages, pushed data, audio data and/or video data.

[0024] The local data processing unit 22 shown within the digital recording device 12 includes the hardware and software necessary to process analog and/or digital signals containing video, audio, still image and/or text information received from one or more sources. For example, the digital recording device 12 may receive

signals from a cable television line, a television tuner, a camcorder, a VCR, the Internet, etc, none of which are shown in Fig. 1. The local data processing unit 22 processes received signals and stores the processed signals as digital information on the mass storage device 24 via the data bus 26, sends the processed signals as analog and/or digital information to one or more devices such as, for example, a television, for live viewing, and/or retrieves and outputs for viewing digital information previously stored on the mass storage device 24.

[0025] The mass storage device 24 is preferably a hard drive or disk drive that uses a magnetic storage medium having, for example, eighty gigabytes or more of storage capacity. However, any other type of mass storage device could be used instead. For example, a hard drive or disk drive that uses an optical storage medium could be used, a magnetic tape drive could be used, or one or more solid state memory devices (e.g., integrated circuit memory such as flash memory, static random access memory, dynamic random access memory, etc.) could be used instead of, or in addition to, a disk drive. More generally, the mass storage device 24 may include any type or combination of memory devices that enables storage of a relatively large amount of digital information and which enables the relatively large amount of digital information to be written to and read (i.e., retrieved) from the mass storage device 24.

[0026] In the examples described herein, the data bus 26 is based on an integrated drive electronics (IDE) standard or protocol, which is a well known parallel data bus configuration and protocol for use with disk drives. However, the data bus 26 could instead be based on any other parallel or serial communication interface that enables digital information to be stored on and retrieved from the mass storage device 24.

[0027] The digital information monitor/analyzer 14 is in communication with the data bus 26 and monitors digital information transmitted between the local data processing unit 22 and the mass storage device 24 via the data bus 26. In general, the digital information monitor/analyzer 14 reads (i.e., snoops) control or command information transmitted on the data bus 26 to identify sets of digital information or digital information packets to be stored on or retrieved from the mass storage device 24. The control or command information may, for example, be one or more handshake signals, control register commands, etc., transmitted via the data bus 26 that cause the mass storage device 24 to write information received from the local data processing unit 22 and/or to retrieve or read digital information requested by the digital local data processing unit 22 and send that information to the local data processing unit 22.

[0028] The digital information monitor/analyzer 14 also reads digital information or packets transmitted by the local data processing unit 22 to the mass storage device 24 via the data bus 26 that contain storage location information associated with one or more digital data packets to be recorded on the mass storage device 24. The storage location information is preferably associated with a physical memory location on the mass storage device 24. Specifically, in the case where the mass storage device 24 is a disk drive, the storage location information corresponds to a cylinder, head and sector of the disk drive. Alternatively, the storage location information may correspond to a logical block address associated with the mass storage device 24.

[0029] In some examples, the digital information monitor/analyzer 14 stores time information together with storage location information on a non-volatile memory (not shown in Fig. 1) in communication with the digital information

monitor/analyzer 14. The time information is preferably a current local time (e.g., current date and time of day information) which, as described in connection with the examples provided herein, is derived from a real-time clock or the equivalent thereof. In other examples, the digital information monitor/analyzer 14 stores or inserts time information together with the storage location information as a header to the digital information packets stored on the mass storage device 24, thereby eliminating the need to store the location and time information on a memory separate from the mass storage device 24.

[0030] The digital information monitor/analyzer 14 monitors the information transmitted via the bus 26 to recognize each occurrence of an operation that transfers a packet of digital data from the local data processing unit 22 to the mass storage device 24 or each occurrence of an operation that transfers a packet of digital data from the mass storage device 24 to the local data processing unit 22. In other words, the digital information monitor/analyzer 14 uses the information transmitted on the data bus 26 to identify individual events associated with recording information on the mass storage device 24 and/or retrieving information from the mass storage device 24. Additionally, the digital information monitor/analyzer 14 monitors the information transmitted via the data bus 26 to determine for each write operation or recording event where (i.e., the location) on the mass storage device 24 each packet of digital information is stored.

[0031] The digital information monitor/analyzer 14 adds time information such as, for example, a time stamp containing a current local time, which preferably includes a local date and time of day, to the location information associated with each write event or operation to form an event record for each write operation. The digital information monitor/analyzer 14 either compiles (using a look-up table format or

any other type of data structure) the individual event records on a memory in communication with the digital information monitor/analyzer 14 or stores the individual event records as headers along with their corresponding digital data packets on the mass storage device 24. In this manner, the digital information monitor/analyzer 14 generates a sequence of events record reflecting a series of data transfers between the local data processing unit 22 and the mass storage device 24.

[0032] In addition to location and time information, the digital information monitor/analyzer 14 also includes source information with each event record. More specifically, the digital information monitor/analyzer 14 receives a source identifier such as a channel number from one of the attachments 16. The channel number may, in turn, correspond to a content provider such as a radio station, a television station, an Internet web page or pages, etc.

[0033] In examples where the digital information monitor/analyzer 14 stores event records in a memory separate from the mass storage device 24, the digital information monitor/analyzer 14 reads information transmitted on the data bus 26 to determine if a previously stored packet of digital information is to be retrieved from the mass storage device 24 in response to a request from the local data processing unit 22. Then, as described in greater detail in connection with the examples below, the digital information monitor/analyzer 14 reads information transmitted on the data bus 26 to derive storage location information associated with the set or packet of digital information to be retrieved. The storage location information is compared or mapped to the storage location information in the sequence of events record. When an event record having the same storage location information is found in the sequence of events record, a playback time, which is preferably a current local time, is associated with (e.g., appended to) that event record. On the other hand, in

examples where the digital information monitor/analyzer 14 stores event records as headers along with corresponding packets of digital data or information on the mass storage device 24, a current local time is appended or otherwise added to the header information to form a playback event record that is sent to and stored within the data logger/processor 18.

[0034] The data logger/processor 18 periodically sends event records that have either been retrieved from a sequence of event records stored in a memory in communication with the digital audio/video information monitor analyzer 14 or that have been previously collected and stored in the data logger/processor 18 to the central data processing facility 20. The central data processing facility 20 can then further process the event records to ascertain various audience behaviors such as, for example, statistical viewing patterns that may be used to develop ratings information for various audio programs, video programs, and/or other sources of information such as web pages.

[0035] Fig. 2 is a more detailed block diagram of an example of the digital information monitor/analyzer 14 shown in Fig. 1. In the example of Fig. 2, the digital information monitor/analyzer 14 includes a time stamp generator 52, a real-time clock 54, an event record generator 56, and an access detector 58. The access detector 58 has a read detector 60 and a write detector 62 associated therewith. The event record generator 56 receives a source input 63, which may, for example, be one of the attachments 16 shown in Fig. 1. Of course, the source input 63 does not necessarily have to be provided by one of the attachement 16. For example, the source input 63 may instead be provided by apparatus and techniques that detect a source by analyzing or decoding audio content, video content, etc. In particular, signature detection systems and methods (many of which are well known), systems

and methods that insert a tag or other identifier (which are also known), etc. may be used instead. Additionally, the digital information monitor/analyzer 14 includes a power unit 64 and may optionally include an event record analyzer 65 and/or a memory 66 that is in communication with the event record generator 56.

[0036] The real-time clock 54 provides information to the time stamp generator 52 that enables the time stamp generator 52 to develop or generate a time stamp including current local date information and time of day information. The time stamp generator 52 provides time stamps that are used by the event record generator 56 to create event records.

[0037] The access detector 58 is in communication with the data bus 26 and monitors the information transmitted thereon to determine when digital information is to be stored on or retrieved from the mass storage device 24. In particular, the access detector 58 monitors control and command signals present on the data bus 26 to determine if digital information is to be stored and/or recorded on the mass storage device 24. In examples where the mass storage device 24 is a disk drive and the data bus 26 is based on an IDE standard or protocol, the access detector 58 monitors a set of signals commonly associated with the protocol such as the command and control register select signals $\overline{CS0}$ and $\overline{CS1}$, a set of control register select signals DA0, DA1 and DA2, and a lower data bus data byte via signals on set of data lines, DD0 through DD7, to determine whether a read or write operation is in progress and to determine what location on the mass storage device 24 is involved in the read or write operation. To better understand the manner in which the write detector 62 determines that a write operation is in progress, an example sequence of signals for an IDE protocol compatible write operation on the data bus 26 is provided in Table 1 below.

TABLE 1

$\overline{CS0}$	$\overline{CS1}$	DA2	DA1	DA0	Register Addressed	Data Low (DD7-DD0)	Action/Meaning
0	1	1	1	0	3F6	08H	Enable interrupts
1	0	0	1	0	1F2	00H	Sectors = 256
1	0	0	1	1	1F3	40H	LBA = 11EF240H
1	0	1	0	0	1F4	F2H	
1	0	1	0	1	1F5	1EH	
1	0	1	1	0	1F6	E1H	
1	0	1	1	1	1F7	CAH	Write to drive
WRITE 65,536 BYTES OF DATA TO DRIVE							

[0038] As shown in the above table, for examples where the data bus 26 operates according to the IDE protocol and the mass storage device 24 is an IDE compatible disk drive, the write detector 62 can detect a write or record operation to the mass storage device 24 by determining that the value CAH (i.e., CA hexadecimal) is to be stored in a register 1F7 of the disk drive. In addition, the access detector 58 determines the location of the write operation by looking at the values to be stored in a set of registers 1F3 through 1F6. In the example shown in Table 1, the disk drive has been configured to operate in a logical block addressing (LBA) mode as opposed to a cylinder/head/sector (C:H:S) addressing mode. However, as is well known, LBA addresses are mathematically related to C:H:S addresses by the expression LBA = (cylinder * headcount + headnumber) * sector count + sector number – 1. Thus, either addressing mode can be used without affecting the performance of the access detector 58.

[0039] The access detector 58 can also detect the size of the packet of information or data that is to written to the disk drive. In the example shown in Table 1, 256 sectors (i.e., 65,536 bytes) of digital information are to be written to the disk drive. In general, audio, video and/or image information is written in relatively large sets or packets such as, for example, packets containing 65,536 bytes of information.

Thus, if desired, the access detector 58 can determine if a packet of digital information to be written to the disk drive or mass storage device 24 contains audio, video and/or image information. In particular, audio, video and/or image information is usually transmitted to the mass storage device 24 in relatively large or maximum size packets (e.g., 65,536 byte packets). As a result, if the value written to a register 1F2 is representative of only a few sectors of information, then the access detector 58 may be configured to ignore the operation. In this manner, the access detector 58 can be configured to discriminate between different types of content, some of which may be audio, video or image information of interest and some of which may be other information that is not needed by the event record generator 56. In some examples, such as where web page accesses are monitored, it may not be desirable to ignore any operations or data transfers, regardless of the amount of information contained in the data packets.

[0040] To better understand the manner in which the read detector 60 determines that a read operation is in progress, a sequence of signals for an IDE protocol compatible read operation on the data bus 26 is provided in Table 2 below.

TABLE 2

$\overline{CS0}$	$\overline{CS1}$	DA2	DA1	DA0	Register Addressed	Data Low (DD7-DD0)	Action/Meaning
0	1	1	1	0	3F6	08H	Enable interrupts
1	0	0	1	0	1F2	00H	Sectors = 256
1	0	0	1	1	1F3	40H	LBA = 11EF240H
1	0	1	0	0	1F4	F2H	
1	0	1	0	1	1F5	1EH	
1	0	1	1	0	1F6	E1H	
1	0	1	1	1	1F7	C8H	Read from drive
READ 65,536 BYTES OF DATA FROM DRIVE							

[0041] As shown in the above table, for examples where the data bus 26 is based on the IDE protocol and the mass storage device 24 is an IDE compatible disk drive, the read detector 60 can detect a read or playback operation by determining that the value C8H is to be stored in a register 1F7. In addition, the access detector 58 determines the target location of the read operation by looking at the values to be stored in a set of registers 1F3 through 1F6.

[0042] The event record generator 56 is in communication with the access detector 58 and the time stamp generator 52. The event record generator 56 generates event records containing time information and storage location information uniquely corresponding to each set or packet of digital information to be written to the mass storage device 24. In addition, the event record generator 56 receives source information such as, for example, channel information via the source input 63 and includes the source or channel information in each of the event records. Table 3 below provides two example event records that could be generated in response to two successive write operations, each of which includes a 65,536 byte packet or set of digital information associated with channel 11, to the mass storage device 24.

TABLE 3

Storage location (LBA)	Event Record Generated (date, time of day, source)
11EF240H	7/30/02 16:05:31 011
11EF340H	7/30/02 16:05:32 011

[0043] As shown in Table 3 above, the 65,536 byte packets associated with the successive write operations were written to or recorded on the mass storage device 24 one second apart. Additionally, the LBAs are 65,536 bytes apart and are logically successive storage locations on the mass storage device 24. While the example of Table 3 shows that the successive write operations occurred one second apart, the time between successive write operations could instead be a fraction of a second apart or more than one second apart. In general, the speed or rate (e.g., the bits per second) at which data can be recorded on the mass storage device 24 and/or the amount of data written in each packet affects the amount of time between successive writes. In particular, as the maximum record rate limit of the mass storage device 24 increases and as the packet size decreases, the time between successive write operations decreases. Conversely, as the maximum record rate limit of the mass storage device 24 decreases and as the packet size increases, the time between successive write operations increases.

[0044] For examples where the digital information monitor/analyzer 14 includes the optional memory 66, the information shown in Table 3 may be stored in the memory 66 as a look-up table. The look-up table is used as described in detail below to modify the event record to include a read or playback time, which in the case of digital video information usually corresponds to a viewing time. Thus, in the

example where the access detector 58 determines that the contents of the storage location 11EF240H are to be read from the mass storage device 24 on July 30, 2002 at 16:30:00 and the contents of the storage location 11EF340H are to be read one second later, the look-up table stored in the memory 66 contains the information shown in Table 4 below.

TABLE 4

Storage location (LBA)	Event Record Generated (date, time of day, source)	Playback Time (Read Time)
11EF240H	7/30/02 16:05:31 011	7/30/02 16:30:00
11EF340H	7/30/02 16:05:32 011	7/30/02 16:30:01

[0045] Thus, in some examples, the event record generator 56 maintains a table or other data structure in the memory 66 that contains a sequence of events record, which enables tracking of read and write operations. In the example shown in Fig. 1 where the digital information monitor/analyzer 14 is in communication with the data bus 26 of the mass storage device 24, the read and write operations in a sequence of events record (one example of which is shown in Table 4) correspond to record and playback operations, respectively.

[0046] As can be seen from Tables 3 and 4 above, a sequence of events record can be used to maintain a record of write or record events that is indexed by the storage location on the mass storage device 24 (Fig. 1). In other words, for each storage location (e.g., each logical block address) on the mass storage device 24 there is a corresponding event record containing the time at which the set of data or data packet associated with the write operation was written or recorded on the mass storage device 24 as well as the source or channel from which the audio, video and/or image information within the data packet was originally derived. When a read or playback operation occurs, the storage location to be read or played back is

used to find the previously stored event record created at the time the information to be read or played back was recorded on the mass storage device 24. Once found, a current local time is added to the event record to record the read or playback event. The event record analyzer 65 may be used to periodically analyze the sequence of events record, which includes all of the write and read events associated with the digital information monitor/analyzer 14, stored in the memory 66 to ascertain recording and playback habits or behavior associated with those using the digital recording device 12. Of course, in the case where the attachments 16 include a people detector, the digital information monitor/analyzer 14 may also generate event records containing information relating to the number and/or identities of those persons involved in the playback event.

[0047] For examples in which the digital information monitor/analyzer 14 does not include the memory 66, the event record generator 56 creates event headers that are stored on the mass storage device 24 along with their respective data packets or sets of digital information. As a result, location information is irrelevant for these examples and, thus, the access detector 58 does not use location information and the event record generator 56 does not store location information on the mass storage device 24.

[0048] Fig. 3 is a detailed block diagram of another manner of implementing the digital information monitor/analyzer 14 shown in Fig. 1. As shown in Fig. 3, the digital information monitor/analyzer 14 includes a non-volatile memory 102 and a volatile memory 104 in communication with a processor 106. In addition, the digital information monitor/analyzer 14 includes a real-time clock 108 in communication with the processor 106 and a power management unit 110.

[0049] The non-volatile memory 102 may be a flash memory or any other type of non-volatile memory. Alternatively, the non-volatile memory 102 could be another mass storage device such as, for example, a disk drive. The volatile memory 104 may be a dynamic random access memory, a static random access memory, or any other suitable type of volatile memory. The processor 106 may be any type of microprocessor, microcontroller, ASIC, RISC, etc. capable of executing instructions, which are stored in the non-volatile memory 102 and/or the volatile memory 104, to perform the functions described in connection with the examples of the digital information monitor/analyzer 14 shown in Figs. 1 and 2. Further, although the memories 102 and 104 are shown as separate devices they may be integrated within a single device and/or each of the memories 102 and 104 may include multiple memory devices. The real-time clock 108 enables the processor 106 to calculate current local time information and to generate time stamp information for event records therefrom.

[0050] At power up, the power management unit 110 enables the processor 106 to copy some or all of the contents of the non-volatile memory 102 to the volatile memory 104. During normal operation, the processor 106 stores event records (in response to write operations) and updates or adds playback time information to previously stored event records in response to read operations on the volatile memory 104. At power down, the power management unit 110 enables the processor 106 to store the contents (including any sequence of events record stored thereon) of the volatile memory 104 on the non-volatile memory 102. In this manner, the number of write/read cycles that the non-volatile memory 102 is subjected to is greatly reduced. As a consequence, the useful life of the non-volatile memory 102 can be greatly extended because, as is well known, non-volatile

memories typically provide a relatively limited number of write/read cycles before failing.

[0051] Alternatively, the non-volatile memory 102 could be eliminated and a battery could be coupled to the volatile memory 104 to provide continuous power to the volatile memory 104 when external power is not otherwise provided to the digital information monitor/analyzer 14. Such battery-backed volatile memory configurations are well known and, thus, are not described in greater detail herein.

[0052] Example programs for implementing the apparatus of Figs. 2 and 3 are shown in Figs. 4, 5, 7 and 14. In these examples, the programs are for execution by a processor and are embodied in processor instructions stored on a tangible medium such as a CD-ROM, a floppy disk, a hard drive, a digital versatile disk (DVD), or a memory associated with the processor. However, persons of ordinary skill in the art will readily appreciate that the entire program or parts thereof could alternatively be executed by a device other than the processor and/or embodied in firmware or dedicated hardware in a well-known manner. For example, any or all of the access detector 58, the read detector 60, the write detector 62, the time stamp generator 52 and/or the event record generator 56 could be implemented by any combination of software, hardware and/or firmware. Further, although the example programs are described with reference to flowcharts, persons of ordinary skill in the art will readily appreciate that many other methods of implementing the apparatus may alternatively be used. For example, the order of execution of the blocks shown in these flowcharts may be changed, and/or some of the blocks described may be changed, eliminated or combined.

[0053] Fig. 4 is an example flow diagram illustrating one manner in which the digital video information monitor/analyzer 14 may be configured to generate event

records and a sequence of events record. The program illustrated in Fig. 4 is used with examples of the digital information monitor/analyzer 14 that maintain a sequence of events record using, for example, a look-up table in a memory separate from the mass storage device 24. For purposes of clarity, the program shown in Fig. 4 is described as being performed by the example of the digital information monitor/analyzer 14 shown in Fig. 2. However, the program shown in Fig. 4 can be used with other digital information monitor/analyzer devices.

[0054] As shown in Fig. 4, the write detector 62 determines if a large packet is to be stored (i.e., written to, recorded on, etc.) on the mass storage device 24 (block 150). Digital audio, video and image information is typically transmitted in relatively large packets. For example, in the example where the digital recording device 12 is a DVR, video program information is typically sent to the mass storage device 24 in 65,536 byte packets, whereas user configuration information and other configuration information is usually sent is much smaller packets such as, for example, 512 byte packets. Thus, selectively generating event records for only large packets (all or most of which contain digital audio, video and/or image information) minimizes the size of the sequence of events record and the amount of memory and processing overhead needed to manage the sequence of events record. Of course, limiting recording of events to large data packets is optional and, if desired, all read and write operations may be recorded.

[0055] If a large packet is to be stored on the mass storage device 24 (block 150), the access detector 58 determines the location (e.g., the LBA) to which the digital information is to be written or stored (block 152) on the mass storage device 24, determines a current local time (block 154) and determines the source (e.g., the channel) associated with the information to be stored or recorded on the mass

storage device 24 (block 156). The event record generator 56 then generates an event record containing the current local time and the source information (block 158). The event record generator 56 then stores the event record, preferably in the memory 66, in the sequence of events record according to the location information (e.g., in a look-up table format indexed by the location information) (block 160).

[0056] If a large packet write is not detected (block 150), the read detector 60 determines if a large packet of digital information is to be read from the mass storage device 24 (block 162). In general, a large packet read corresponds to a playback of digital audio, video and/or image information. For instance, in the example where the mass storage device 24 communicates using an IDE protocol, a packet containing digital audio, video and/or image information may be 65,536 bytes, which corresponds to 256 sectors. In addition, the IDE protocol permits the use of multiple read/write commands that enable the transmission of packets containing more than 256 sectors of digital information within a single data transaction with a mass storage device.

[0057] If the read detector 60 detects a large packet read (block 162), the access detector 58 determines, based on digital information transmitted on the data bus 26, the location on the mass storage device 24 from which the packet is to be read (block 164). The event record generator 56 then uses the location information to look up the previously stored event record corresponding to that location information in the sequence of events record (i.e., in the look-up table) (block 166). One particularly useful manner of enabling the event record generator 56 to rapidly look up the event record corresponding to the location information transmitted on the data bus 26 establishes a one-to-one correspondence between memory addresses within the memory 66 and the permissible storage locations available within the

mass storage device 24. Thus, for examples where the mass storage device 24 is an IDE compatible disk drive, each LBA or C:H:S location on the mass storage device 24 may be directly mapped to an address within the memory 66. In any event, the time stamp generator 52 then determines a current local time (e.g., a date and time of day) (block 168) and the event record generator 56 adds that current local time information to the event record found at block 166 (block 170).

[0058] Fig. 5 is a flow diagram of another example manner in which the digital information monitor/analyzer 14 may be configured to generate a sequence of events record. The example program shown in Fig. 5 is used with examples of the digital information monitor/analyzer 14 that store event records as headers along with digital information on the mass storage device 24, as opposed to storing event records in a table or other data structure in a memory separate from the mass storage device 24.

[0059] As shown in Fig. 5, the write detector 62 determines if a large packet is to be written to (i.e., recorded on) the mass storage device 24 (block 200). Of course, if desired, a packet size restriction does not have to be implemented. If a large packet is to be written, the time stamp generator 52 determines a current local time (block 202), the access detector 58 determines the source of the packet information (block 204) and the event record generator 56 generates an event record containing the current local time information and source information (block 206). A header packet is formed by the event record generator 56 using the event record (block 208) and the header packet is prepended or inserted in the data stream of information written to the mass storage device 24 (block 210) so that the header packet is stored along with its corresponding data packet on the mass storage device 24 (block 212).

[0060] If the write detector 62 determines that a large packet is not being written to the mass storage device 24 (block 200), the read detector 60 determines if a large packet is to be read from (e.g., played back from) the mass storage device 24 (block 214). If a large packet is to be read from the mass storage device 24, the event record generator 56 determines a current local time (e.g., a date and time of day) (block 216), extracts the header packet associated with the packet to be read (block 218) and adds the current local time to the extracted header packet to form a playback record (block 220). The event record generator 56 then stores the playback record in a sequence of events record, which may contain a plurality of playback records (block 222).

[0061] Fig. 6 is a block diagram of an example header packet insertion/extraction apparatus 250 that may be used within the digital information monitor/analyzer 14 to carry out the example method shown in Fig. 5. As shown in Fig. 6, the header insertion/extraction apparatus 250 is serially interposed in the data bus 26 between the local data processing unit 22 and the mass storage device 24. The apparatus 250 includes a write detector 252, a header packet generator 254, a time stamper 256, a delay unit 258, a control unit 260, a read detector 262, switches 264, 266, 268 and 270, a playback record output 271, and an end of packet detector 272.

[0062] Normally, the switches 264, 266, 268 and 270 are in positions A, A, D and E, respectively. However, when the write detector 252 detects a write operation (e.g., a value of CA hexadecimal is written to register 1F7 of an IDE compatible mass storage device), the control unit moves switches 264 and 266 to their respective B positions. As a result, any digital information transmitted on the bus 26 to the mass storage device 24 is delayed by delay unit 258, which can be implemented using a plurality of shift registers or the like. While the data packet is

delayed by the delay unit 258, the header packet generator 254 generates a header packet containing current local time information derived from the time stamper 256. In addition, the header packet may contain source information generated by one of the attachments 16 (Fig. 1). The header packet is then transmitted to the mass storage device 24 on the data bus 26. After the header packet has been transmitted and before the data packet reaches the output of the delay unit 258, the control unit 260 causes the switch 266 to move to position C, thereby enabling the data packet to be conveyed to and stored on the mass storage device 24. After the data packet is stored on the mass storage device 24, the control unit 260 returns the switches 264 and 266 to their respective A positions.

[0063] When the read detector 262 detects that information is to be retrieved or read from the mass storage device 24 (e.g., a value of C8 hexadecimal is written to the 1F7 register of an IDE compatible mass storage device), the control unit 260 and/or read detector 262 may be used to detect if a header packet exists. If a header packet exists, the control unit 260 causes the switch 264 to be in its A position, the switch 266 to be in its D position, and the switches 268 and 270 to be in their respective E positions. The previously stored header packet is then routed to the playback record output 271.

[0064] When the end of packet detector 272 detects the end of the header packet, the end of packet detector 272 sends a signal to the control unit 260, which, in turn, causes the switch 270 to move to its F position and the switch 266 to move to its A position. With the switch 270 in its F position, the time stamper 256 is enabled to provide current time information via the playback record output 271. In this manner, the playback record output 271 provides the originally recorded header packet information, which includes the time at which the data packet was written to

or stored on the mass storage device 24, and a read time or playback time for the data packet.

[0065] Fig. 7 is a flow diagram of an example manner in which the header packet insertion/extraction apparatus shown in Fig. 6 may be used within the information monitor/analyzer devices shown in Figs. 1, 2 and 3 to generate a sequence of events record. As shown in Fig. 7, the digital information monitor/analyzer 14 determines if the file size (i.e., the amount of data) associated with a pending data transfer on the data bus 26 is greater than a threshold size associated with an audio, video and/or image file (block 276). If the digital information monitor/analyzer 14 determines that the file size exceeds the threshold value, then the write detector 252 determines if a write operation is pending (block 277).

[0066] If the write detector 252 determines that a write operation is pending or occurring (block 277), the control unit 260 configures the switch 264 to route the file being transferred from the local data processing unit 22 to the mass storage device 24 via the data bus 26 through the delay unit 258, thereby delaying the audio, video and/or image information or content being sent via the bus 26 (block 278). The control unit 260 then sets the switch 266 to its B position to enable the insertion of a header packet on the data bus 26 (block 279). Because the audio, video and/or image information or content is delayed, the header packet is sent to the mass storage device 24 immediately ahead of the content information and, thus, is effectively prepended to the content information. The prepended or inserted header packet contains time information generated by the time stamper 256 and may also contain source information and information indicating or otherwise marking the beginning and end of the header packet. After the header packet is conveyed to the mass storage device 24 via the data bus 26, the control unit 260 sets the switch 266

to its C position to enable the delayed audio, video and/or image content information to be conveyed or routed to the mass storage device 24 (block 280).

[0067] If a write operation is not detected (block 277), the read detector 262 determines if a read operation is pending on the data bus 26 (block 281). If a read operation is pending, the control unit 260 uses the read detector 262 to determine if the beginning of the header packet is being transmitted on the data bus 26 (block 282). If the beginning of the header packet is detected (block 282), the control unit 260 sets the switches 268 and 270 to their respective E positions to strip the header information from the data bus 26 (i.e., the header information is not routed back to the local data processing unit for display, playback, etc. via a media device such as, for example, a television) (block 283). The end of packet detector 272 determines if the end of the header packet has been transmitted on the data bus 26 (block 284). If the end of the header packet has not been detected (block 284), then the control unit 260 continues to route or strip the header packet information from the data bus 26 and sends it to the playback record output 271. On the other hand, if the end of packet detector 272 detects the end of the header packet, the control unit 260 sets the switches 264 and 266 to their A positions, the switch 268 to its D position and the switch 270 to its F position. As a result, digital audio, video and/or image content associated with the stripped header packet is routed via the data bus 26 to a media device such as, for example, the local data processing unit 22 within a DVR, PVR, etc. (block 285). In addition, the time stamper 256 provides time information (e.g., date and time of day information) to the playback record output 271 via the switch 270, thereby effectively attaching the time information, which in this example, is a playback time, to the header information (block 286). The playback record output 271 may convey the header information, including playback time information, as an

event record to a central collection location such as, for example, the data logger/processor 18 (block 287).

[0068] Fig. 8 is a block diagram of an example system 300 that uses a digital information monitor/analyzer 302 in conjunction with a DVR 304, such as a TiVo™ system, and an audience measurement unit or home unit 306. As shown in Fig. 8, the DVR 304 includes a video processing unit 308 and a disk drive or hard drive 310 that are coupled via a data bus 312. The disk drive 310 is an IDE compatible device and uses a magnetic storage medium having a storage capacity of at least eighty gigabytes. However, the disk drive 310 may optionally use other storage media, have greater or less storage capacity and may communicate with the video processing unit 308 using any desired communication protocol and platform. The DVR 304 may also include an infrared detector 314 that receives commands and/or other control signals from a hand-held remote control device or another device having an infrared transmitter.

[0069] The DVR 304 is in communication with a cable or satellite television signal 316, to a television 318 and to the digital information monitor/analyzer 302. A source detector 320, which may, for example, be a frequency detector attachment, is in communication with the digital information monitor/analyzer 302 and provides tuning information thereto. The digital information monitor/analyzer 302 may optionally include an infrared transmitter 322 that enables the digital information monitor/analyzer 302 to communicate with the DVR 304 via its infrared detector 314. The digital information monitor/analyzer 302 may be configured identically or similarly to any of the examples of the digital information monitor/analyzer 14 shown and described in connection with Figs. 1, 2 and 3.

[0070] The digital information monitor/analyzer 302 monitors the data bus 312 and generates event records containing recording times and sources and, if needed by the digital information monitor/analyzer 302, the storage locations of those event records on the disk drive 310. In addition, the digital information monitor/analyzer 302 adds read time, playback time or viewing time information to the event records to generate a sequence of events record that can be further analyzed, as described in greater detail below, by the digital information monitor/analyzer 302, the home unit 306 and/or a central data processing facility such as the facility 20 shown in Fig. 1 to ascertain audience viewing behaviors or habits.

[0071] Before discussing a specific example of an analysis of a sequence of events record generated by the digital information monitor/analyzer 302, a discussion of the general relationships between the various operational modes of the DVR 304 and the characteristics of a sequence of events record is provided in connection with Figs. 9 through 12 below. For all of Figs. 9 through 12, the horizontal axis represents the view time or playback time associated with the event records and the vertical axis represents the delay time (i.e., the difference between the playback or viewing time and the record time).

[0072] Fig. 9 is a graph that depicts an example of live viewing of a video program via the DVR 304. As shown in Fig. 9, the delay time equals zero for all view times during live viewing of a program. Fig. 10 is a graph that depicts an example of delayed viewing of video program via the DVR 304. As shown in Fig. 10, the delay time is constant for all view times, indicating that a part of or the entire video program currently being viewed was previously recorded by the DVR 304 and is now being viewed.

[0073] Fig. 11 is a graph that depicts an example relationship between view time and delay time for pause and rewind operations of the DVR 304. A pause results in a one-for-one increase in delay time and view time and, thus, the line having a slope equal to one (i.e., at forty-five degrees) represents a paused condition of the DVR 304. On the other hand, if the relationship between view time and delay time falls between the forty-five degree pause line and the vertical axis at ninety degrees, a rewind operation of the DVR 304 is indicated.

[0074] Fig. 12 is a graph that depicts an example relationship between view time and delay time for a fast forward operation of the DVR 304. During fast forward operation of the DVR 304, the delay time decreases as the view time increases. Thus, as shown in Fig. 12, if the relationship between view time and delay time falls between the positive portion of the horizontal axis and the negative portion of the vertical axis (i.e., at minus ninety degrees), a fast forward operation of the DVR 304 is indicated.

[0075] Fig. 13 is a graph of an example viewing behavior associated with the DVR 304. The example graph shown in Fig. 13 may be generated based on a sequence of events record by the digital information monitor/analyzer 302 and/or by the home unit 306. Alternatively, the example viewing behavior information graphically depicted in Fig. 13 could instead be generated by a central data processing facility in communication with the home unit 306. In any case, the viewing behavior associated with the DVR 304 can be interpreted in light of the general operational characteristics of the DVR 304 shown in Figs. 9-12.

[0076] In a first region 400 of the example of Fig. 13, the delay time equals zero for all view times and, thus, indicates that live viewing of a viewer interface menu or a video program is occurring. In second and third regions 402 and 404, a time shift

occurs, indicating that a "go back" command or the like may have been issued by the viewer (via a hand-held remote control or the like) to the DVR 304, causing the DVR to rewind and then resume delayed playback of a video program. In a fourth region 406, the slope equals one, indicating that the DVR 304 is paused. In a fifth region 408, the DVR 304 resumes delayed playback of the video program. In a sixth region 410, the slope of the characteristic is negative, indicating that a fast forward operation is in progress. In a seventh region 412, the DVR 304 resumes delayed playback. In an eighth region 414, the slope of the characteristic is greater than one (i.e., greater than forty-five degrees), indicating that the DVR 304 is engaged in a rewind operation. In a ninth region, 416, the DVR resumes delayed playback. In a tenth region 418, the time delay is again zero for all view times and, thus, the DVR 304 is operating to provide live viewing of a video program.

[0077] With the DVR 304 shown in Fig. 8, it may not be possible in some circumstances to distinguish live viewing of a program from paused operation of the DVR 304 by only monitoring information transmitted on the data bus 312. Specifically, when a program is viewed live (i.e., without any delay), information may in some cases only be written (i.e., there are no read operations) to the disk drive 310. Similarly, when a program is initially paused, information may, in some cases, only be written to the disk drive 310. Further, during paused operation, the last viewed video frame does not have to be read from the disk drive 310 because a refresh circuit (not shown) within the DVR 310 is used to constantly regenerate the last frame and provide it to the television 318. Consequently, in some circumstances live viewing and paused operation will appear to be identical based on the information monitored on the data bus 312.

[0078] Fig. 14 is a flow diagram of an example program that can be used by the digital information monitor/analyzer 14 described herein to eliminate the possibility that paused operation and live viewing operation of a DVR cannot be distinguished. As shown in Fig. 14, the digital information monitor/analyzer 14, for example, determines if the elapsed time since a last read of the disk drive 310 is greater than a predetermined threshold time (e.g., several seconds) (block 500). If the elapsed time is not greater than the predetermined threshold time (block 500), the digital information monitor/analyzer 14 reenters block 500. Otherwise, if the elapsed time is greater than the predetermined threshold time, the digital information monitor/analyzer 14 causes the DVR 304 to pause for a brief time such as, for example, about one-half of a second (block 502). The digital information monitor/analyzer 14 then causes the DVR 304 to enter playback operation (block 504).

[0079] The digital information monitor/analyzer 14 then determines if there has been a time delay (block 506) greater than a second threshold. A time delay exceeding the second threshold (e.g., more than one second), indicates that the viewer initially had the DVR 304 paused. Thus, if a large time delay exists, the digital information monitor/analyzer 14 causes the DVR 304 to enter paused operation (block 508). On the other hand, if the digital information monitor/analyzer 14 determines that the time delay (block 506), if any, does not exceed the second threshold, then the DVR 304 is allowed to remain in a playback operating mode. The various DVR commands required to carry out the example method shown in Fig. 14 can be transmitted to the DVR 304 by the digital information monitor/analyzer 14 via the infrared transmitter 322 and the infrared detector 314.

[0080] Although certain methods and apparatus have been described herein, the scope of coverage of this patent is not limited thereto. To the contrary, this patent covers all embodiments fairly falling within the scope of the appended claims either literally or under the doctrine of equivalents.

What is claimed is:

1. An apparatus for tracking a sequence of events associated with a digital recording device, comprising:

a processor;

a first memory in communication with the processor, wherein the processor executes instructions stored on the first memory to:

read first information transmitted to a mass storage device on a data bus associated with the digital recording device;

identify a set of digital information to be stored on the mass storage device based at least in part on the first information;

read second information transmitted on the data bus to derive storage location information associated with the set of digital information; and

store time information together with the storage location information on a second memory in communication with the processor to generate a sequence of events record thereon corresponding to the sequence of events associated with the digital recording device.

2. The apparatus of claim 1, wherein the set of digital information includes one or more of text, image information, video information, and audio information.

3. The apparatus of claim 1, wherein the mass storage device includes one or more of a magnetic and an optical storage medium.

4. The apparatus of claim 3, wherein the mass storage device is a disk drive.

5. The apparatus of claim 4, wherein the storage location information corresponds to a cylinder, head and sector of the disk drive.

6. The apparatus of claim 1, wherein the storage location information corresponds to a location on the mass storage device.

7. The apparatus of claim 1, wherein the data bus uses one of a serial and a parallel configuration.

8. The apparatus of claim 1, wherein the data bus is based at least in part on an integrated drive electronics standard.

9. The apparatus of claim 1, wherein the first information is associated with a write operation.

10. The apparatus of claim 1, wherein the second information is associated with a physical memory location on the mass storage device.

11. The apparatus of claim 1, wherein the first and second memories are integrated within a single device.

12. The apparatus of claim 1, wherein at least one of the first and second memories is a non-volatile memory.

13. The apparatus of claim 1, wherein the storage location information is associated with a logical block address of the mass storage device.

14. The apparatus of claim 1, wherein the time information is associated with a current local time.

15. The apparatus of claim 1, wherein the processor executes the instructions stored on the first memory to store source information associated with the set of digital information together with the time information and the storage location information.

16. The apparatus of claim 15, wherein the source information includes a source identifier.

17. The apparatus of claim 16, wherein the source identifier is associated with one of an analog and a digital information content provider.

18. The apparatus of claim 1, wherein the sequence of events record stored on the second memory is based at least in part on a look-up table format.

19. The apparatus of claim 1, wherein the processor executes the instructions stored on the first memory to:

read third information transmitted on the data bus to determine that the set of digital information is to be retrieved from the mass storage device;

read fourth information transmitted on the data bus to derive storage location information associated with the set of digital information;

map the storage location information to the storage location information stored in the sequence of events record; and

associate a playback time of the set of digital information with the time information stored together with the location information in the sequence of events record.

20. The apparatus of claim 1, wherein the mass storage device is associated with a digital video recording device.

21. A method of tracking a sequence of events associated with a digital recording device, comprising:

reading first information transmitted on a data bus in communication with a mass storage device associated with the digital recording device;

identifying a set of digital information to be stored on the mass storage device based at least in part on the first information;

reading second information transmitted on the data bus to derive storage location information associated with the set of digital information; and

storing time information together with the storage location information on a memory in communication with the processor to generate a sequence of events record corresponding to the sequence of events associated with the digital recording device.

22. The method of claim 21, wherein identifying the set of digital information includes identifying one or more of image information, video information, and audio information.

23. The method of claim 21, wherein reading the second information transmitted on the data bus to derive the storage location information associated with the set of digital information includes reading information associated with a cylinder, head and sector of a disk drive.

24. The method of claim 21, wherein reading the second information transmitted on the data bus to derive the storage location information associated with the set of digital information includes reading information associated with a logical block address of the mass storage device.

25. The method of claim 21, wherein storing the time information together with the storage location information on the memory in communication with the processor includes storing a current local time.

26. The method of claim 21, further including storing source information associated with the set of digital information together with the time information and the storage location information in the sequence of events record.

27. The method of claim 21, further including:

reading third information transmitted on the data bus to determine that the set of digital information is to be retrieved from the mass storage device;

reading fourth information transmitted on the data bus to derive storage location information associated with the set of digital information;

mapping the storage location information to the storage location information stored in the sequence of events record; and

associating a playback time of the set of digital information with the time information stored together with the location information in the sequence of events record.

28. The apparatus of claim 21, wherein reading the first information transmitted on the data bus in communication with the mass storage device includes reading a data bus associated with a digital video recording device.

29. A machine readable medium having instructions stored thereon that, when executed by a processor, cause a machine to:

read first information transmitted on a data bus in communication with a mass storage device associated with the digital recording device;

identify a set of digital information to be stored on the mass storage device based at least in part on the first information;

read second information transmitted on the data bus to derive storage location information associated with the set of digital information; and

store time information together with the storage location information on a memory in communication with the processor to generate a sequence of events record corresponding to the sequence of events associated with the digital recording device.

30. The machine readable medium of claim 29, wherein the instructions stored thereon, when executed by the processor, cause the machine to identify the set of digital information by identifying one or more of image information, video information, and audio information.

31. The machine readable medium of claim 29, wherein the instructions stored thereon, when executed by the processor, cause the machine to:

read third information transmitted on the data bus to determine that the set of digital information is to be retrieved from the mass storage device;

read fourth information transmitted on the data bus to derive storage location information associated with the set of digital information;

map the storage location information to the storage location information stored in the sequence of events record; and

associate a playback time of the set of digital information with the time information stored together with the location information in the sequence of events record.

32. An apparatus for tracking a sequence of events associated with a digital recording device, comprising:

a processor;

a first memory in communication with the processor, wherein the processor executes instructions stored on the first memory to:

read first information transmitted on a data bus in communication with a mass storage device associated with the digital recording device;

identify a set of digital information to be retrieved for playback from the mass storage device based at least in part on the first information;

read second information transmitted on the data bus to derive storage location information associated with the set of digital information to be retrieved for playback;

match the storage location information to location information stored in a sequence of events record on a second memory in communication with the processor; and

associate playback time information with the location information stored in the sequence of events record to track the sequence of events associated with the digital recording device.

33. The apparatus of claim 32, wherein the set of digital information includes one of image information, video information, and audio information.

34. The apparatus of claim 32, wherein the mass storage device includes one of a magnetic and an optical storage medium.

35. The apparatus of claim 34, wherein the mass storage device is a disk drive.

36. The apparatus of claim 35, wherein the storage location information corresponds to a cylinder, head and sector of the disk drive.

37. The apparatus of claim 32, wherein the data bus uses one of a serial and a parallel configuration.

38. The apparatus of claim 32, wherein the first information is associated with a write operation.

39. The apparatus of claim 32, wherein the second information is associated with a physical memory location on the mass storage device.

40. The apparatus of claim 32, wherein the first and second memories are integrated within a single device.

41. The apparatus of claim 32, wherein the time information is associated with a current local time.

42. The apparatus of claim 32, wherein the processor executes the instructions stored on the first memory to store source information associated with the set of digital information together with the time information and the storage location information.

43. The apparatus of claim 32, wherein the mass storage device is associated with a digital video recording device.

44. A method for tracking a sequence of events associated with a digital recording device, comprising:

reading first information transmitted on a data bus in communication with a mass storage device associated with the digital recording device;

identifying a set of digital image information to be retrieved for playback from the mass storage device based at least in part on the first information;

reading second information transmitted on the data bus to derive storage location information associated with the set of digital information to be retrieved;

matching the storage location information to location information stored in a sequence of events record stored on a second memory in communication with the processor to retrieve a record associated with the set of digital information; and

associating playback time information with the record associated with the set of digital information to track the sequence of events associated with the digital recording device.

45. The method of claim 44, wherein identifying the set of digital image information to be retrieved for playback from the mass storage device based at least in part on the first information includes identifying information including one or more of image information, video information, and audio information.

46. The method of claim 44, wherein associating the playback time information with the record associated with set of digital information includes associating a current local time with the record associated with the set of digital information.

47. An apparatus for tracking a sequence of events associated with a digital recording device, comprising:

a time stamp generator;

an access detector in communication with a data bus, wherein the access detector determines digital information is to be stored on or retrieved from a mass storage device associated with the digital recording device and determines the locations on the mass storage device to which the digital information is to be stored or from which the digital information is to be retrieved; and

an event record generator in communication with the access detector and the time stamp generator that generates event records containing time information and location information uniquely corresponding to the digital information and to events within sequence of events associated with the digital recording device.

48. The apparatus of claim 47, wherein the digital information is one or more of audio information, image information and video information.

49. The apparatus of claim 47, wherein the time stamp generator includes a real-time clock that generates time stamp information.

50. The apparatus of claim 49, wherein the time stamp information includes date information and time of day information.

51. The apparatus of claim 47, wherein the location information includes one of logical block addresses and cylinder/head/sector information.

52. The apparatus of claim 47, wherein the access detector monitors control signals transmitted to the mass storage device via the data bus to detect one or more of a write operation and a read operation.

53. The apparatus of claim 52, wherein the mass storage device is a disk drive, the data bus is based at least in part on an integrated drive electronics standard and the monitored control signals include control register selection signals.

54. The apparatus of claim 47, wherein the access detector monitors control signals transmitted to the mass storage device via the data bus to determine the locations on the mass storage device to which the digital information is to be stored or from which the digital information is to be retrieved.

55. The apparatus of claim 54, wherein the mass storage device is a disk drive, the data bus is based at least in part on an integrated drive electronics standard and the monitored control signals include control register selection signals and data line signals.

56. The apparatus of claim 47, wherein the event record generator sends each of the event records containing the time information and the location information to be stored together with its corresponding digital information on the mass storage device.

57. The apparatus of claim 56, wherein each of the event records is stored as a header with its corresponding digital information on the mass storage device.

58. The apparatus of claim 57, wherein in response to retrieving the digital information from the mass storage device, the event record generator adds playback time information to the event record containing the time information and the location information corresponding to the retrieved digital information.

59. The apparatus of claim 47, wherein the event record generator stores each of the event records on a memory separate from the mass storage device.

60. The apparatus of claim 59, wherein each of the event records is stored using a look-up table format on the memory separate from the mass storage device.

61. The apparatus of claim 59, wherein the memory separate from the mass storage device is a non-volatile memory.

62. The apparatus of claim 60, wherein in response to retrieving the digital image information from the mass storage device, the event record generator adds playback time information to the event record that corresponds to the retrieved digital image information.

63. The apparatus of claim 47, wherein the event record generator is in communication with a source identification unit that provides source information associated with the digital information to be stored on the mass storage device, and wherein the event record generator generates the records containing the time information and the location information to include the source information.

64. The apparatus of claim 47, wherein the access detector determines digital information is to be stored on the mass storage device based at least in part on a signal indicative of the amount of data to be transmitted via the data bus to the mass storage device.

65. An apparatus for tracking a sequence of events associated with a digital recording device, comprising:

a processor;

a memory in communication with the processor, wherein the processor executes instructions stored on the memory to:

determine digital information is to be stored on or retrieved from a mass storage device associated with the digital recording device;

determine the locations on the mass storage device to which the digital information is to be stored or from which the digital information is to be retrieved; and

generate event records containing time information and location information uniquely corresponding to the digital information and to events within sequence of events associated with the digital recording device.

66. The apparatus of claim 65, wherein the digital information is one or more of text information, audio information, image information and video information.

67. The apparatus of claim 65, wherein the processor executes the instructions stored on the memory to monitor control signals transmitted to the mass storage device via the data bus to detect one or more of a write operation and a read operation.

68. The apparatus of claim 65, wherein the processor executes the instructions stored on the memory to send each of the event records containing the time information and the location information to be stored together with its corresponding digital information on the mass storage device.

69. The apparatus of claim 68, wherein each of the event records is stored as a header with its corresponding digital information on the mass storage device.

70. The apparatus of claim 65, wherein the processor executes the instructions stored on the memory to store each of the event records on a memory separate from the mass storage device.

71. The apparatus of claim 70, wherein each of the event records is stored using a look-up table format on the memory separate from the mass storage device.

72. An apparatus for tracking a sequence of events associated with a digital recording device, comprising:

a write detector that detects a write operation sent from a local data processing unit to a mass storage device via a data bus;

a time stamper that generates current local time information;

a header packet generator that generates a header packet containing the current local time information in response to detection of the write operation; and

a first switch that routes the header packet to be stored on the mass storage device together with digital information associated with the sequence of events.

73. The apparatus of claim 72, further including:

a read detector that detects a read operation sent from the local data processing unit to the mass storage device via the data bus; and

a second switch that routes the header packet stored on the mass storage device to a playback record output in response to detection of the read operation.

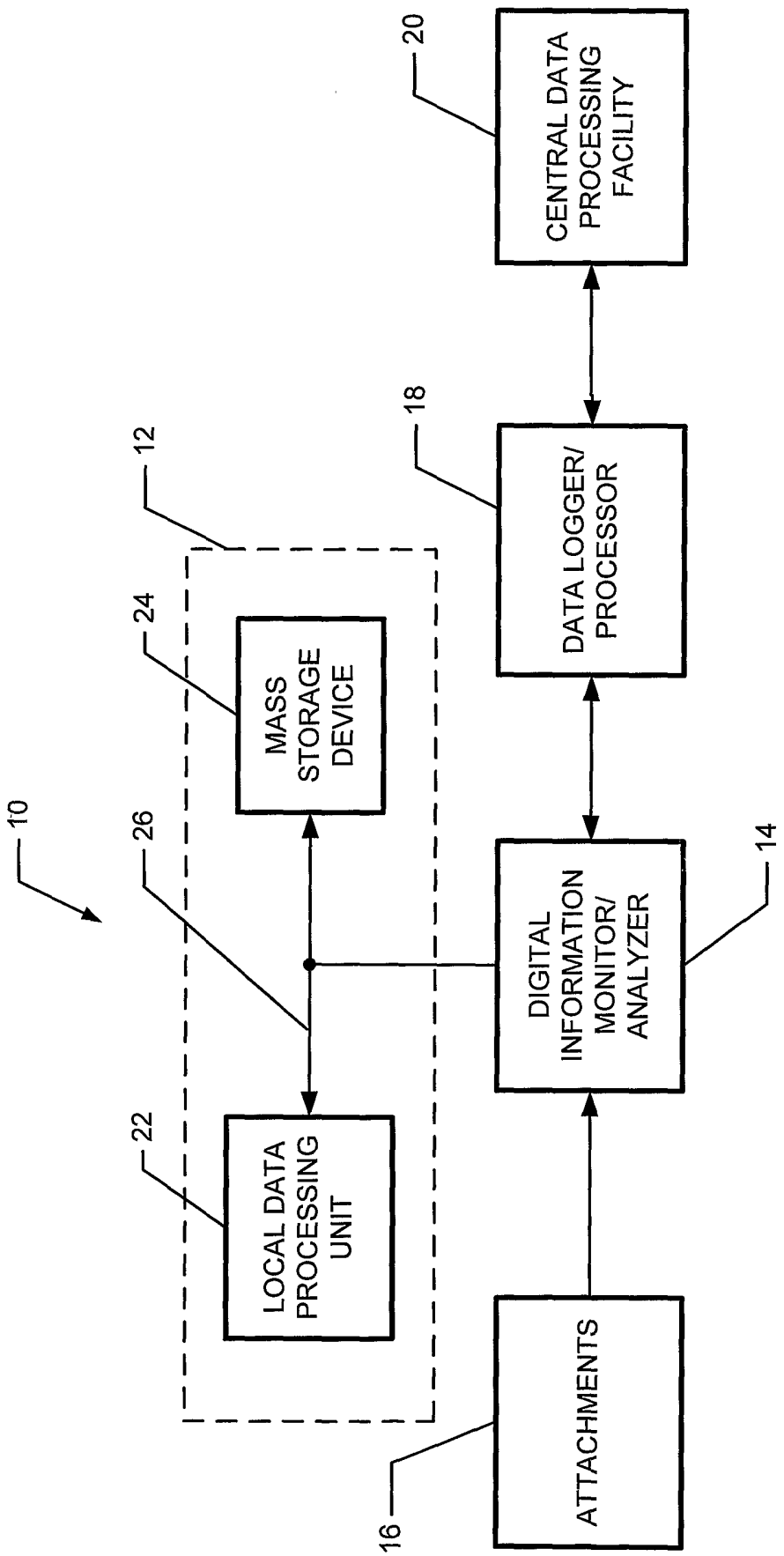
10
12
14
16
18
20
22
24
26
CENTRAL DATA PROCESSING FACILITY
DATA LOGGER/ PROCESSOR
MASS STORAGE DEVICE
DIGITAL INFORMATION MONITOR/ ANALYZER
LOCAL DATA PROCESSING UNIT
ATTACHMENTS

FIG. 1

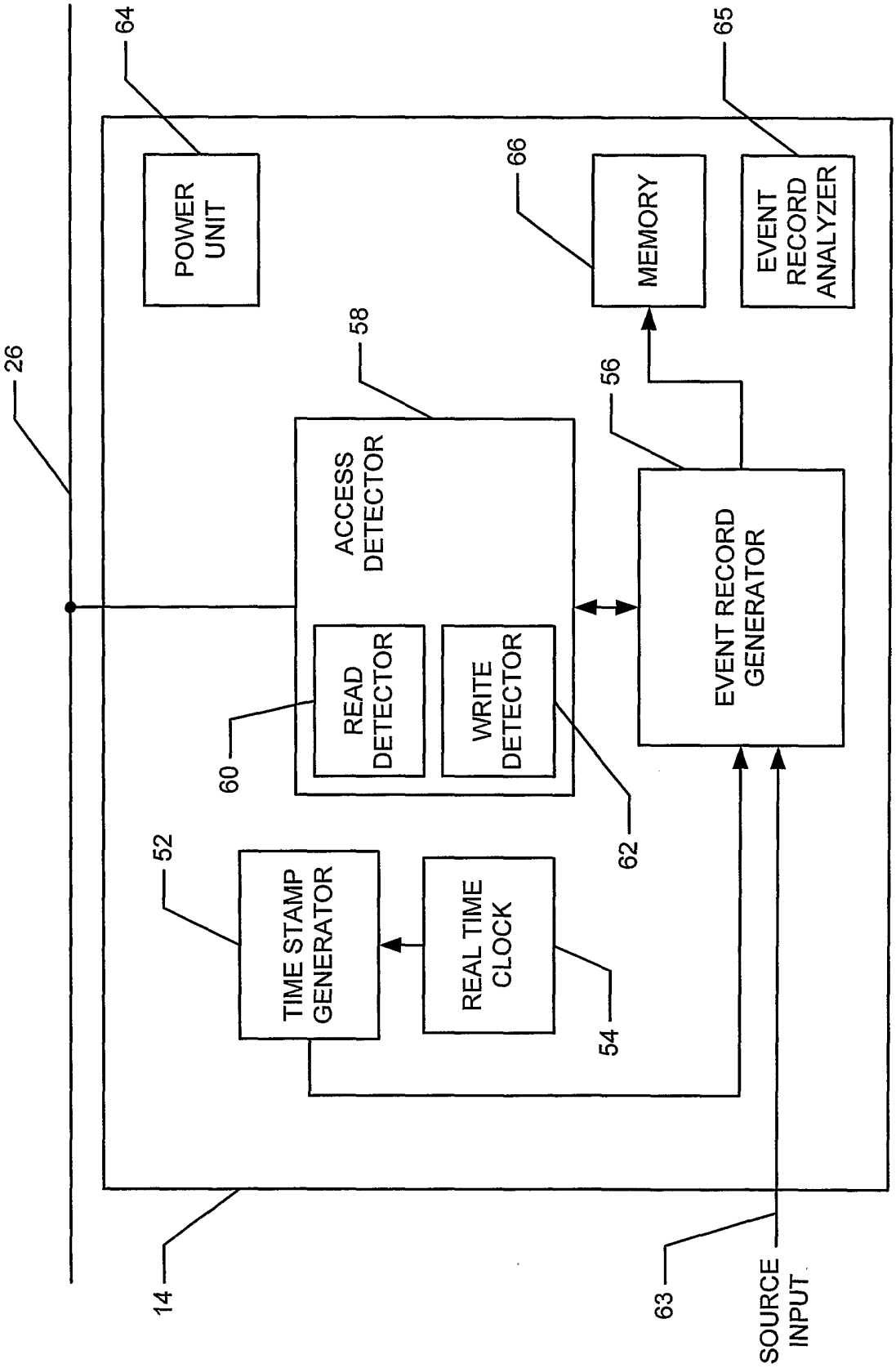
26
64
POWER UNIT
58
ACCESS DETECTOR
READ DETECTOR
WRITE DETECTOR
60
62
52
TIME STAMP GENERATOR
REAL TIME CLOCK
54
66
MEMORY
56
EVENT RECORD GENERATOR
65
EVENT RECORD ANALYZER
14
63
SOURCE INPUT

FIG. 2

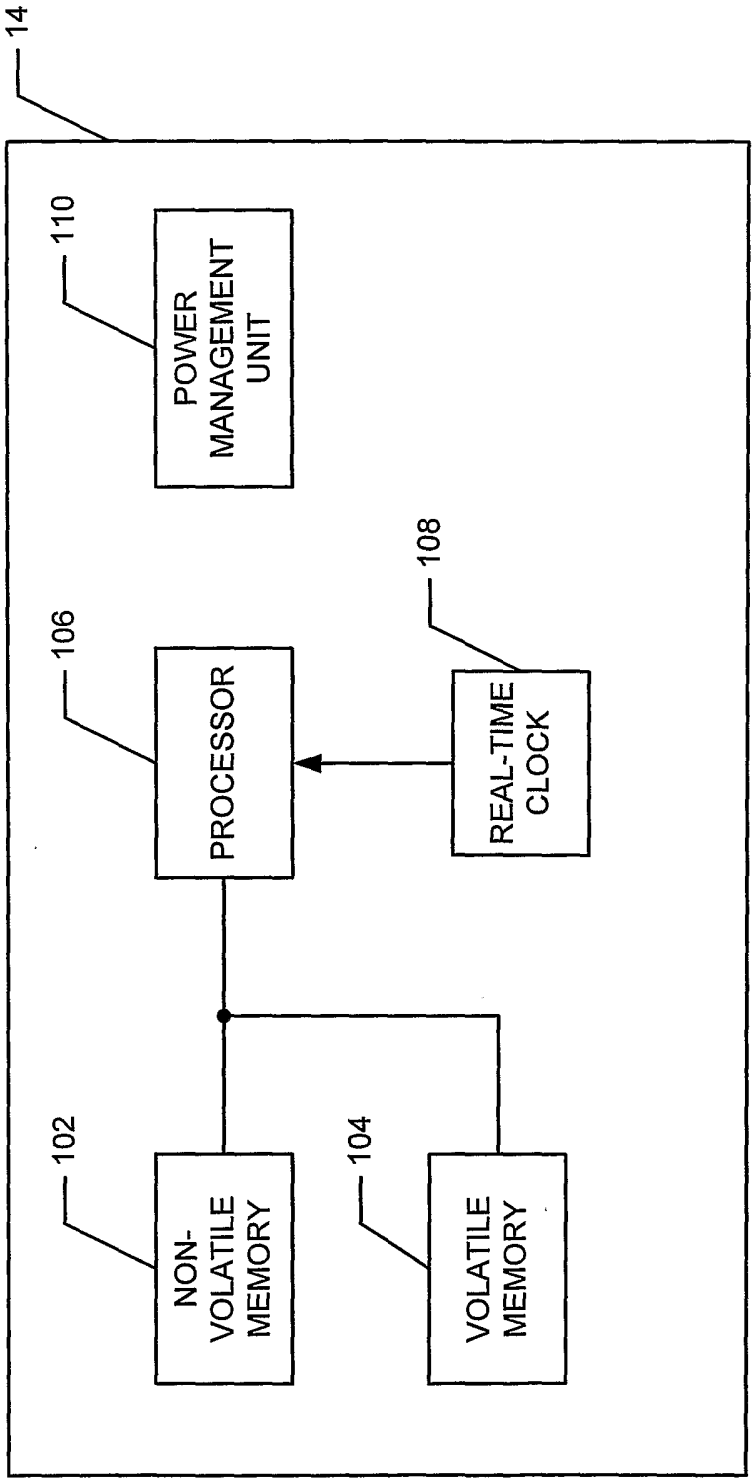
14
110
POWER MANAGEMENT UNIT
106
PROCESSOR
108
REAL-TIME CLOCK
102
NON-VOLATILE MEMORY
104
VOLATILE MEMORY

FIG. 3

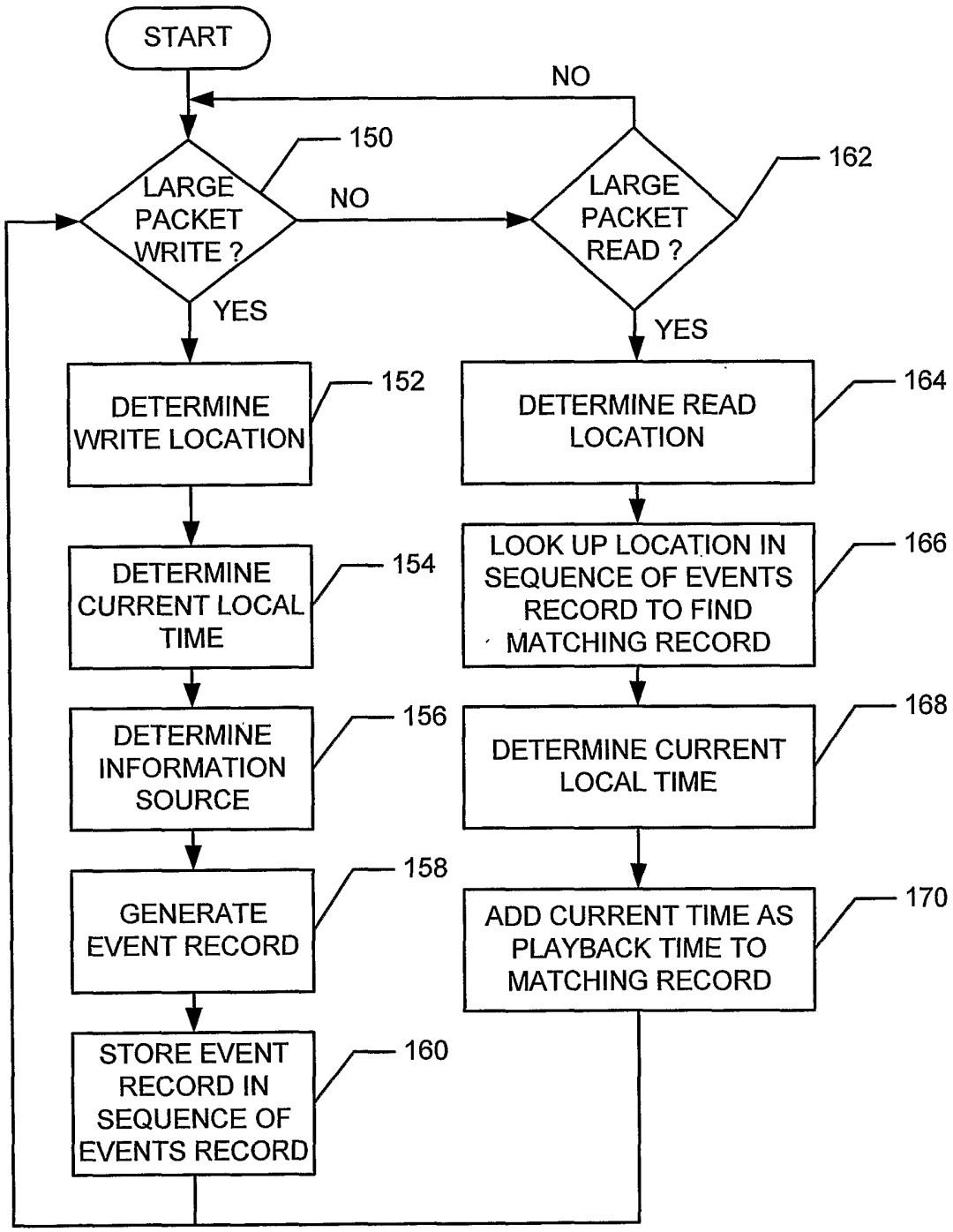
START
NO
150
LARGE PACKET WRITE ?
NO
162
LARGE PACKET READ ?
YES
YES
152
DETERMINE WRITE LOCATION
164
DETERMINE READ LOCATION
154
DETERMINE CURRENT LOCAL TIME
166
LOOK UP LOCATION IN SEQUENCE OF EVENTS RECORD TO FIND MATCHING RECORD
156
DETERMINE INFORMATION SOURCE
168
DETERMINE CURRENT LOCAL TIME
158
GENERATE EVENT RECORD
170
ADD CURRENT TIME AS PLAYBACK TIME TO MATCHING RECORD
160
STORE EVENT RECORD IN SEQUENCE OF EVENTS RECORD

FIG. 4

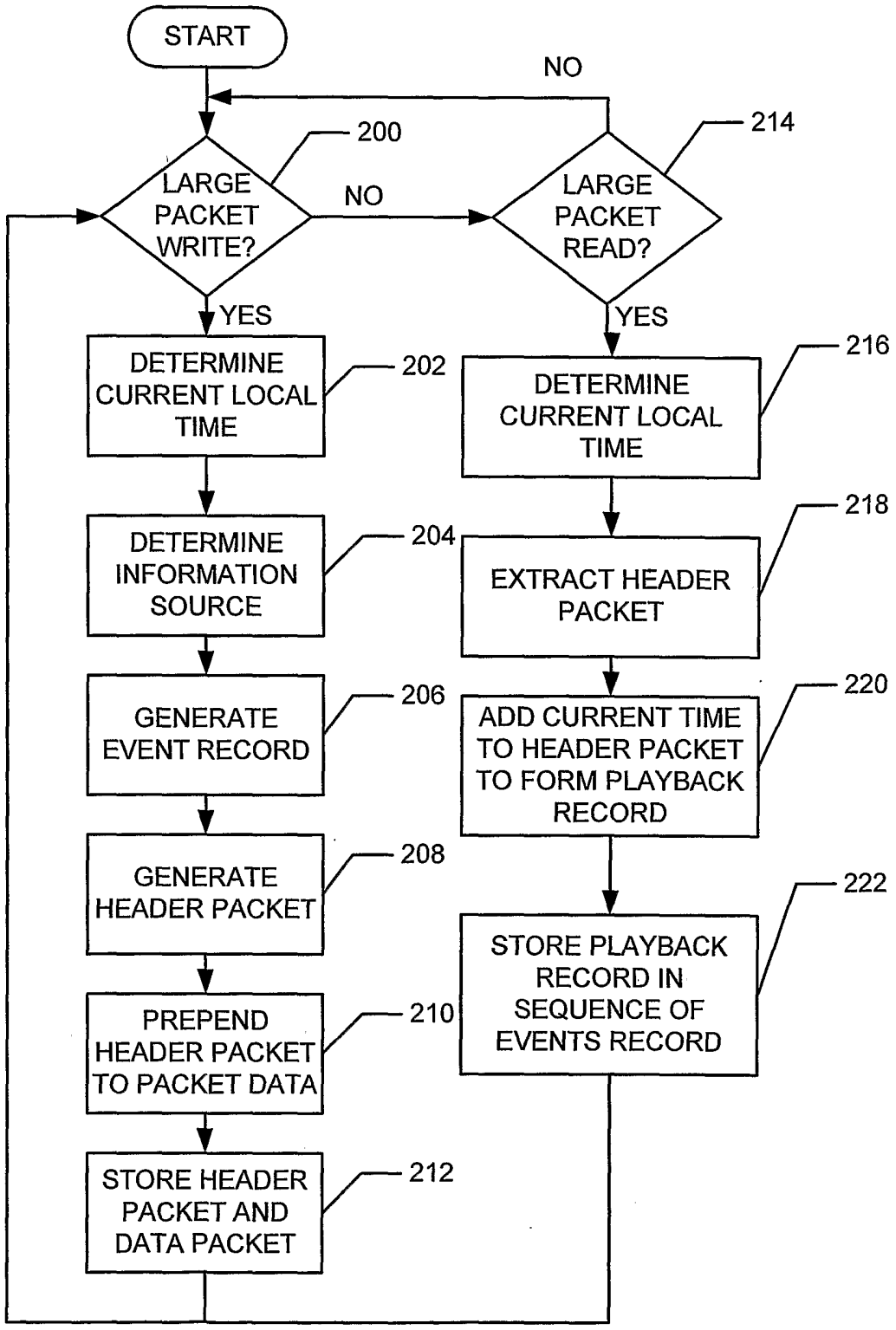
START
NO
200
214
LARGE PACKET WRITE?
NO
LARGE PACKET READ?
YES
YES
DETERMINE CURRENT LOCAL TIME
202
216
DETERMINE CURRENT LOCAL TIME
DETERMINE INFORMATION SOURCE
204
218
EXTRACT HEADER PACKET
GENERATE EVENT RECORD
206
220
ADD CURRENT TIME TO HEADER PACKET TO FORM PLAYBACK RECORD
GENERATE HEADER PACKET
208
222
STORE PLAYBACK RECORD IN SEQUENCE OF EVENTS RECORD
PREPEND HEADER PACKET TO PACKET DATA
210
STORE HEADER PACKET AND DATA PACKET
212

FIG. 5

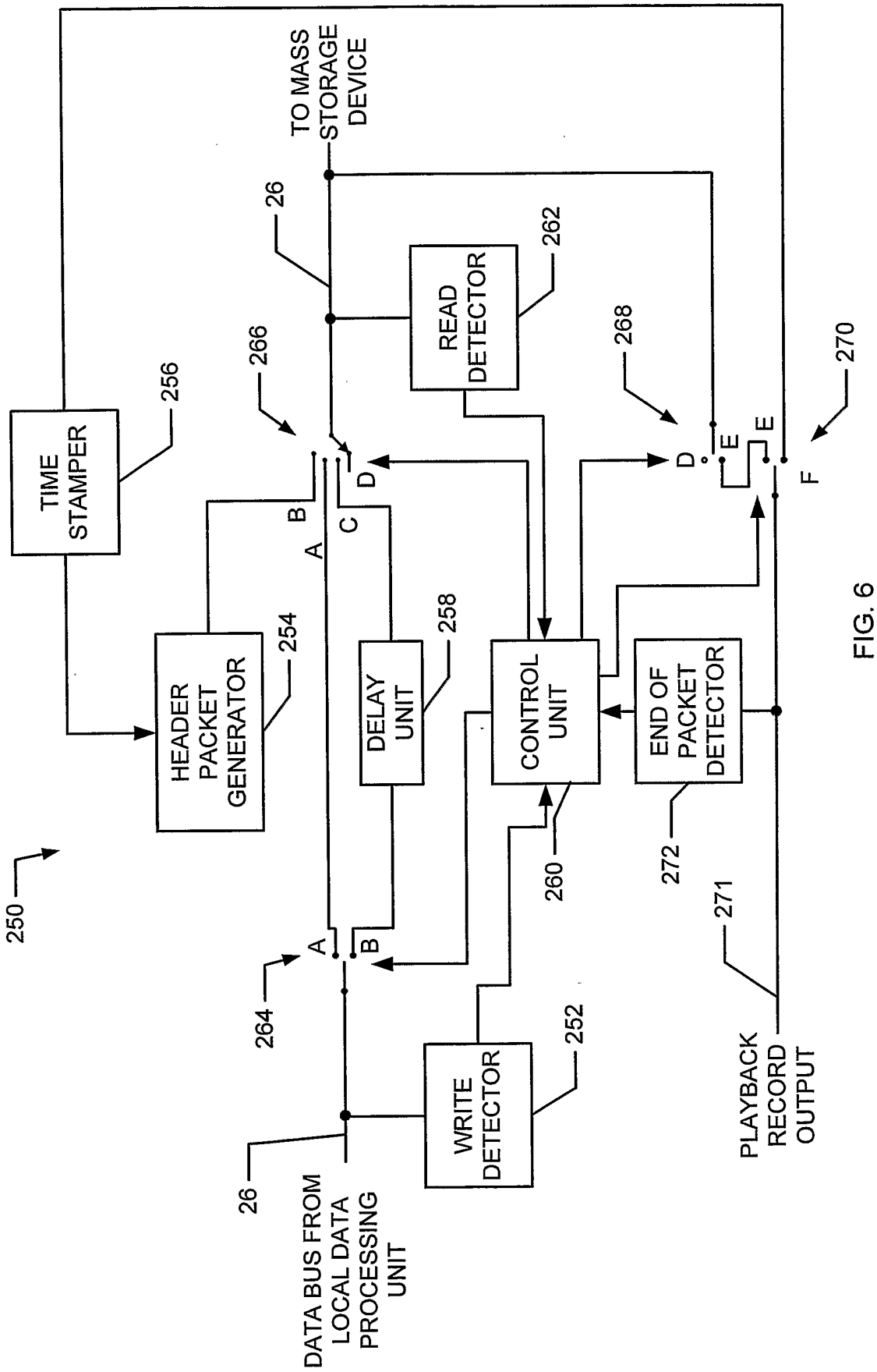
TO MASS STORAGE DEVICE
26
262
READ DETECTOR
266
268
270
256
TIME STAMPER
A
B
C
D
D
E
E
F
254
HEADER PACKET GENERATOR
258
DELAY UNIT
CONTROL UNIT
END OF PACKET DETECTOR
250
260
272
271
264
A
B
252
WRITE DETECTOR
26
DATA BUS FROM LOCAL DATA PROCESSING UNIT
PLAYBACK RECORD OUTPUT

FIG. 6

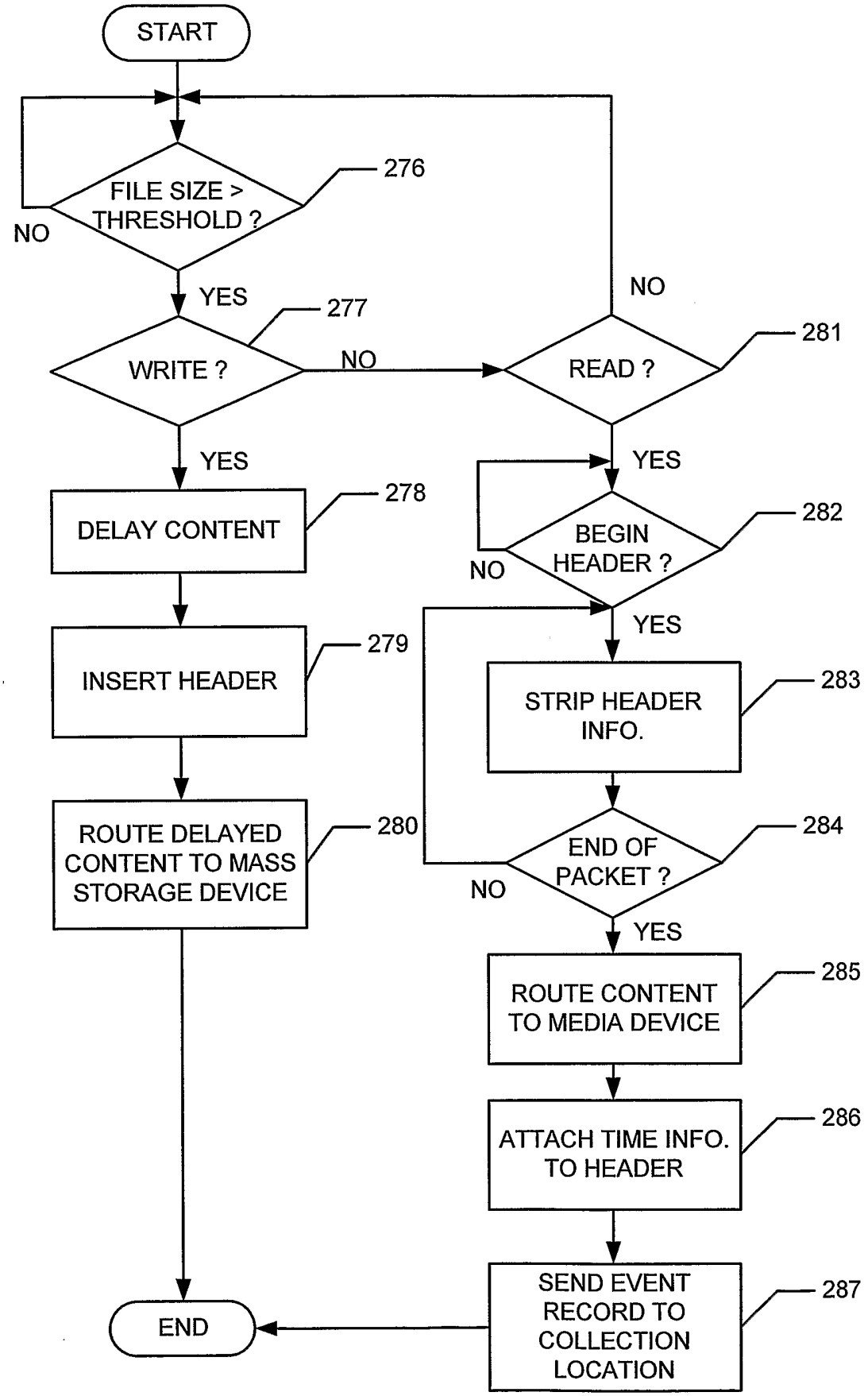
START
FILE SIZE > THRESHOLD ?
276
NO
YES
WRITE ?
277
NO
READ ?
281
NO
YES
YES
DELAY CONTENT
278
BEGIN HEADER ?
282
NO
YES
INSERT HEADER
279
STRIP HEADER INFO.
283
ROUTE DELAYED CONTENT TO MASS STORAGE DEVICE
280
END OF PACKET ?
284
NO
YES
ROUTE CONTENT TO MEDIA DEVICE
285
ATTACH TIME INFO. TO HEADER
286
SEND EVENT RECORD TO COLLECTION LOCATION
287
END

FIG. 7

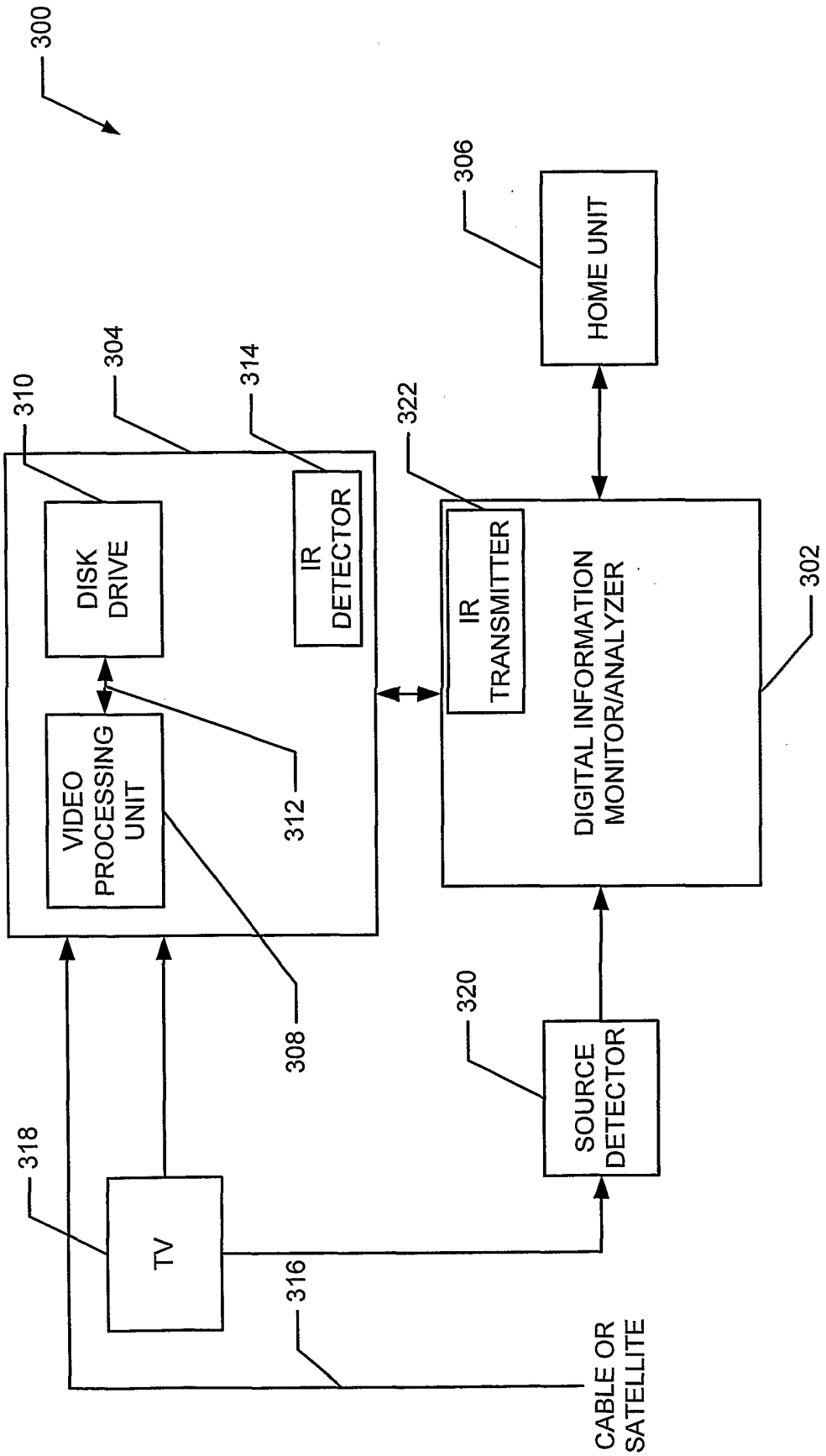
300
310
304
314
DISK DRIVE
IR DETECTOR
VIDEO PROCESSING UNIT
312
308
318
TV
316
CABLE OR SATELLITE
322
IR TRANSMITTER
DIGITAL INFORMATION MONITOR/ANALYZER
302
306
HOME UNIT
320
SOURCE DETECTOR

FIG. 8

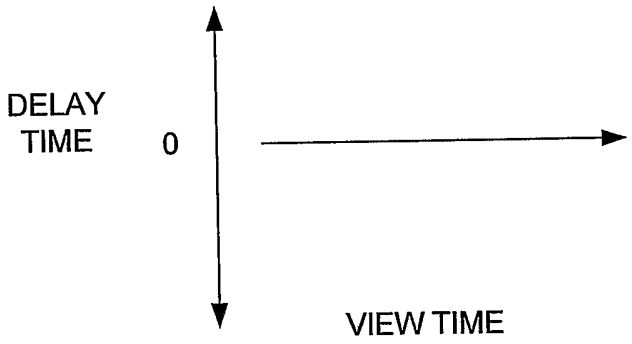

FIG. 9

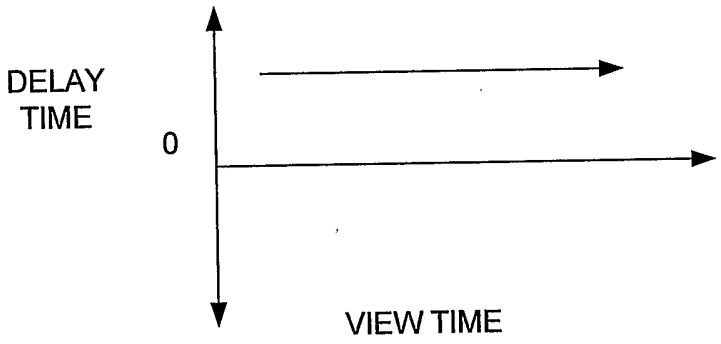

FIG. 10

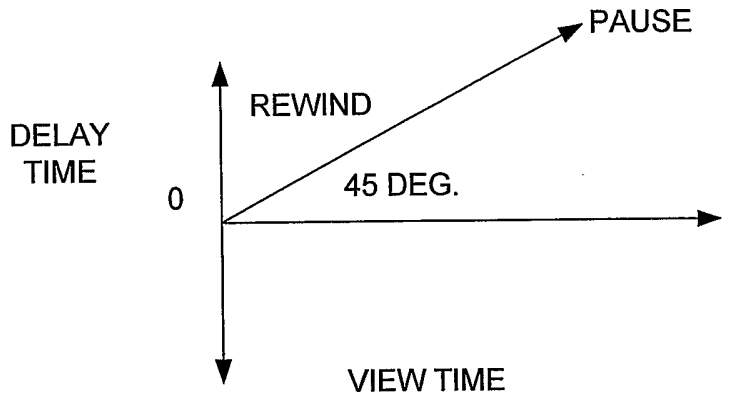
PAUSE
REWIND
DELAY
TIME
0
45 DEG.
VIEW TIME

FIG. 11

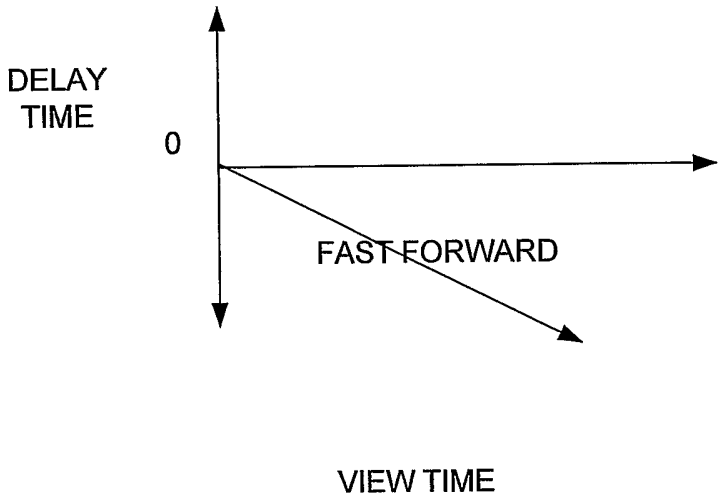
DELAY
TIME
0
FAST FORWARD
VIEW TIME

FIG. 12

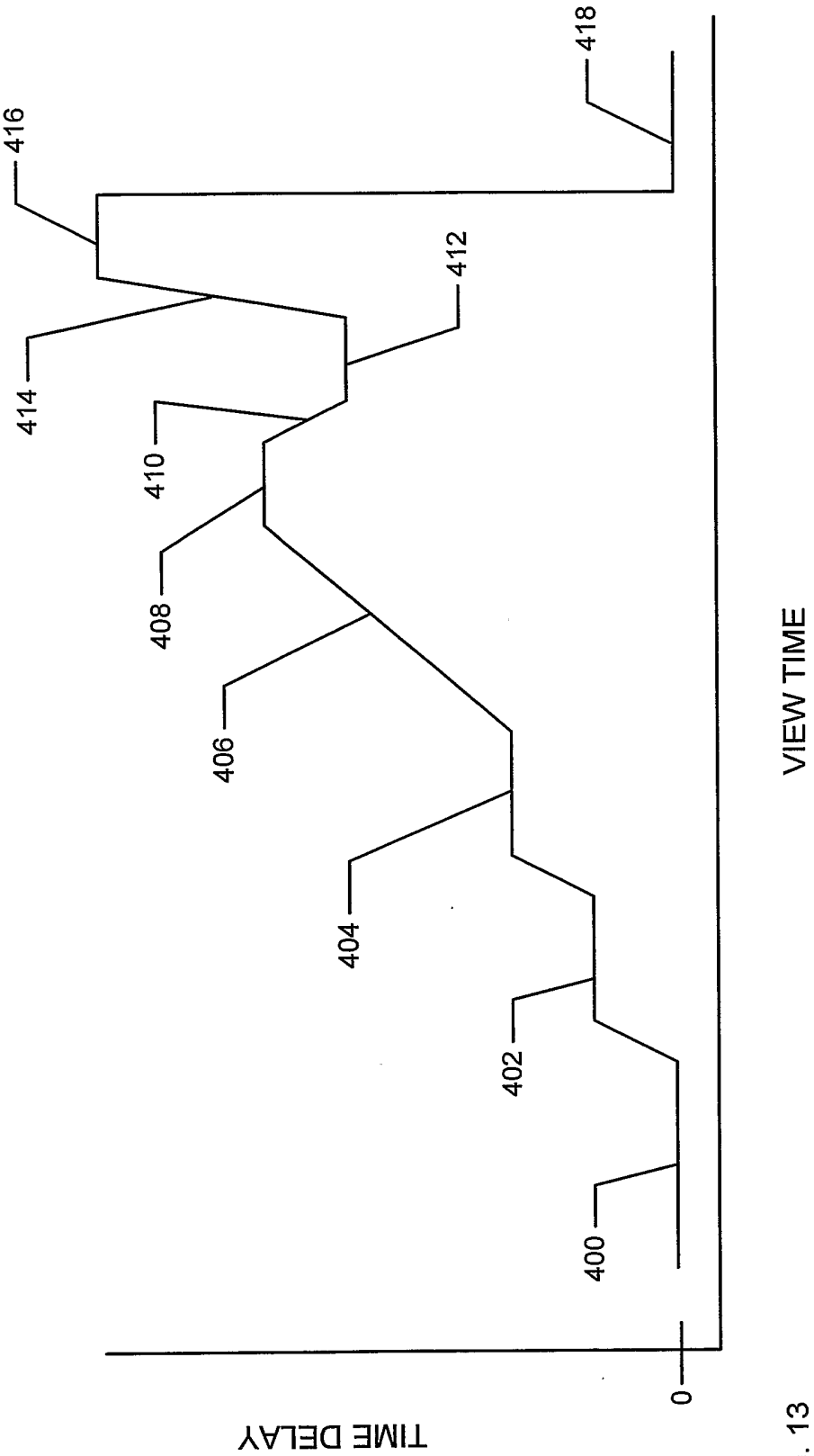

FIG. 13

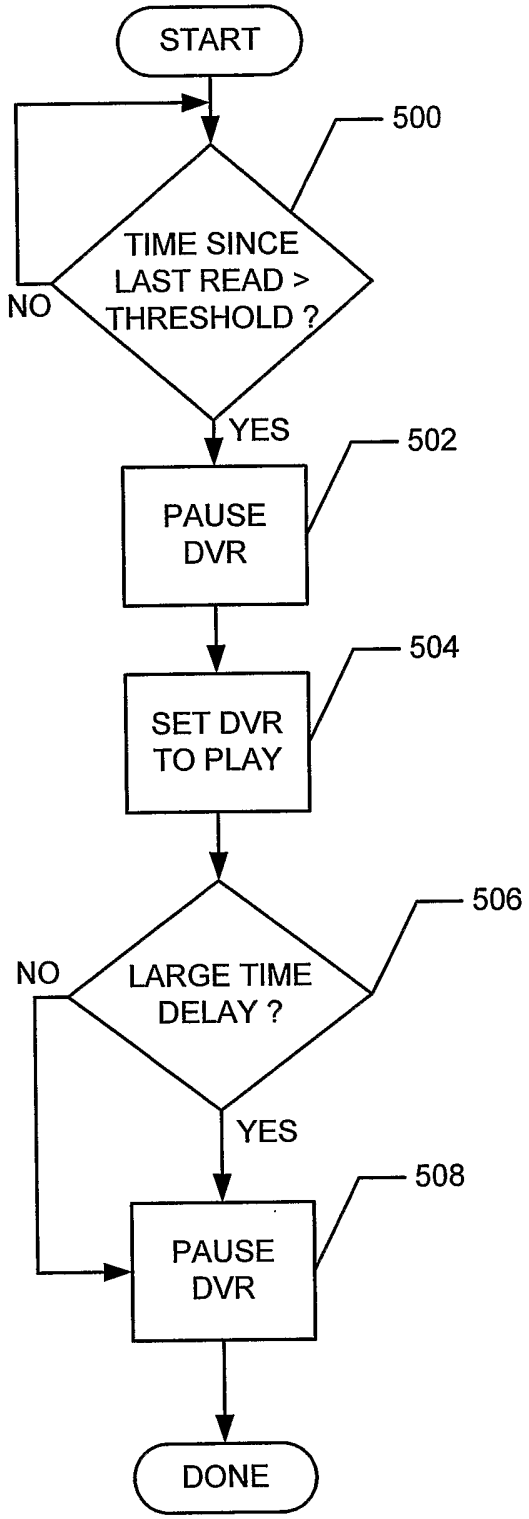
START
500
TIME SINCE LAST READ > THRESHOLD ?
NO
YES
502
PAUSE DVR
504
SET DVR TO PLAY
506
LARGE TIME DELAY ?
NO
YES
508
PAUSE DVR
DONE

FIG. 14

INTERNATIONAL SEARCH REPORT

International application No.
PCT/US02/38012

A. CLASSIFICATION OF SUBJECT MATTER

IPC(7) : H04N 5/781
US CL : 386/125

According to International Patent Classification (IPC) or to both national classification and IPC

B. FIELDS SEARCHED

Minimum documentation searched (classification system followed by classification symbols)
U.S. : 386/1, 33, 45, 95-107, 125-126; 725, 114-117, 138, 144-147.

Documentation searched other than minimum documentation to the extent that such documents are included in the fields searched
none

Electronic data base consulted during the international search (name of data base and, where practicable, search terms used)
Please See Continuation Sheet

C. DOCUMENTS CONSIDERED TO BE RELEVANT

Category *	Citation of document, with indication, where appropriate, of the relevant passages	Relevant to claim No.
A	US 2002/0173911 A1 (BRUNET et al) 21 November 2002, Fig. 1.	1-73
X	US 6,460,018 B1 A (KASAI et al) 01 October 2002, Figs. 1 and 3(A)-3(D) and col. 13.	1-73

☐ Further documents are listed in the continuation of Box C. ☐ See patent family annex.

* Special categories of cited documents:

"A" document defining the general state of the art which is not considered to be of particular relevance

"E" earlier application or patent published on or after the international filing date

"L" document which may throw doubts on priority claim(s) or which is cited to establish the publication date of another citation or other special reason (as specified)

"O" document referring to an oral disclosure, use, exhibition or other means

"P" document published prior to the international filing date but later than the priority date claimed

"T" later document published after the international filing date or priority date and not in conflict with the application but cited to understand the principle or theory underlying the invention

"X" document of particular relevance; the claimed invention cannot be considered novel or cannot be considered to involve an inventive step when the document is taken alone

"Y" document of particular relevance; the claimed invention cannot be considered to involve an inventive step when the document is combined with one or more other such documents, such combination being obvious to a person skilled in the art

"&" document member of the same patent family

Date of the actual completion of the international search	Date of mailing of the international search report
09 May 2003 (09.05.2003)	[illegible] MAY 2003
Name and mailing address of the ISA/US Commissioner of Patents and Trademarks Box PCT Washington, D.C. 20231 Facsimile No. (703)305-3230	Authorized officer Thai Tran Telephone No. (703) 305-4725

Form PCT/ISA/210 (second sheet) (July 1998)

Continuation of B. FIELDS SEARCHED Item 3:
EAST
search terms: index, time, address, location, event, table, disk, and disk.