US007694318B2

(12) **United States Patent**
König et al.

(10) **Patent No.: US 7,694,318 B2**
(45) **Date of Patent: Apr. 6, 2010**

(54) **VIDEO DETECTION AND INSERTION**

(75) Inventors: **Richard König**, Bern (CH); **Charles A. Eldering**, Doylestown, PA (US); **Rainer Wolfgang Lienhart**, Santa Clara, CA (US); **Christine Lienhart**, Santa Clara, CA (US)

(73) Assignee: **Technology, Patents & Licensing, Inc.**, Doylestown, PA (US)

(*) Notice: Subject to any disclaimer, the term of this patent is extended or adjusted under 35 U.S.C. 154(b) by 1141 days.

(21) Appl. No.: **10/790,468**

(22) Filed: **Mar. 1, 2004**

(65) **Prior Publication Data**

US 2004/0189873 A1 Sep. 30, 2004

Related U.S. Application Data

(60) Provisional application No. 60/510,896, filed on Oct. 14, 2003, provisional application No. 60/452,802, filed on Mar. 7, 2003.

(51) **Int. Cl.**
H04N 7/10 (2006.01)

(52) **U.S. Cl.** **725/32**; 725/36

(58) **Field of Classification Search** 725/32, 725/33, 34, 35, 36; 348/700–703, 616
See application file for complete search history.

(56) **References Cited**

U.S. PATENT DOCUMENTS

4,888,638 A 12/1989 Bohn
4,974,085 A 11/1990 Campbell
5,029,014 A 7/1991 Lindstrom
5,155,591 A 10/1992 Wachob
5,319,455 A 6/1994 Hoarty et al.
5,389,964 A 2/1995 Oberle
5,436,653 A * 7/1995 Ellis et al. 725/22
5,446,919 A 8/1995 Wilkins
5,574,572 A 11/1996 Malinowski et al.
5,600,366 A 2/1997 Schulman
5,661,516 A 8/1997 Carles
5,668,917 A 9/1997 Lewine
5,715,018 A 2/1998 Fasciano
5,748,263 A 5/1998 Ball
5,774,170 A 6/1998 Hite
5,892,536 A 4/1999 Logan
5,973,723 A 10/1999 DeLuca

(Continued)

FOREIGN PATENT DOCUMENTS

EP 1313313 5/2003

(Continued)

OTHER PUBLICATIONS

Gauch J. M. et al; "Identification of New Commercials Using Repeated Video Sequence Detection", Proceedings of IEEE International Conf. on Image Processing, ICIP '2005, Sep. 11, 2005, pp. 1252-1255.

(Continued)

Primary Examiner—Brian T Pendleton
Assistant Examiner—Jean D. Saintcyr

(57) **ABSTRACT**

A television signal substitution system that replaces known video segments such as advertisements with selected replacement advertisements. Fingerprint data of known advertisements can be stored in a fingerprint database. When new fingerprint data is available, the fingerprint data can be automatically or manually transmitted to subscribers. Various techniques can be used to identify advertisements based on the fingerprint data.

14 Claims, 20 Drawing Sheets

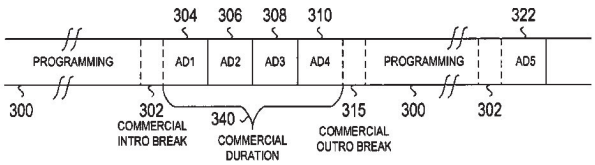

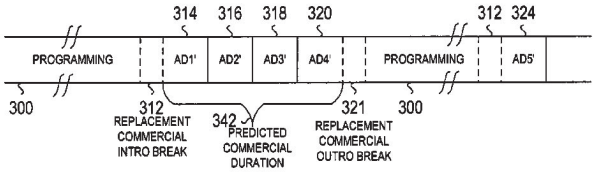

AMR EX. 2028
Samsung v AMR
IPR2024-01349

U.S. PATENT DOCUMENTS

5,973,750	A	10/1999	Ogawa et al.	
5,978,381	A	11/1999	Perlman et al.	
5,986,692	A	11/1999	Logan	
5,987,210	A	11/1999	Iggulden et al.	
5,999,689	A	12/1999	Iggulden	
6,002,443	A	12/1999	Iggulden	
6,078,896	A	6/2000	Kaehler	
6,100,941	A *	8/2000	Dimitrova et al.	348/700
6,122,016	A	9/2000	DeHaan	
6,404,977	B1	6/2002	Iggulden	
6,425,127	B1	7/2002	Bates	
6,446,261	B1	9/2002	Rosser	
6,463,585	B1	10/2002	Hendricks	
6,469,749	B1	10/2002	Dimitrova	
6,487,721	B1 *	11/2002	Safadi	725/36
6,490,370	B1	12/2002	Krasinski et al.	
6,577,346	B1	6/2003	Perlman	
6,593,976	B1	7/2003	Lord	
6,597,405	B1	7/2003	Iggulden	
6,633,651	B1	10/2003	Hirzalla	
6,646,655	B1 *	11/2003	Brandt et al.	715/723
6,675,174	B1	1/2004	Bolle et al.	
6,698,020	B1	2/2004	Zigmond et al.	
6,721,733	B2	4/2004	Lipson et al.	
6,738,978	B1	5/2004	Hendricks et al.	
6,771,316	B1	8/2004	Iggulden	
6,819,863	B2	11/2004	Dagtas et al.	
6,892,193	B2	5/2005	Bolle et al.	
6,912,571	B1	6/2005	Serena	
6,987,883	B2	1/2006	Lipton et al.	
7,020,304	B2	3/2006	Alattar et al.	
7,051,351	B2	5/2006	Goldman	
7,055,166	B1 *	5/2006	Logan et al.	725/32
7,062,084	B2	6/2006	Messing et al.	
7,064,796	B2	6/2006	Roy et al.	
7,089,575	B2	8/2006	Agnihotri et al.	
7,110,454	B1	9/2006	Chakraborty	
7,146,632	B2	12/2006	Miller	
7,185,044	B2	2/2007	Ryan et al.	
7,266,832	B2	9/2007	Miller	
7,269,330	B1	9/2007	Iggulden	
7,272,295	B1	9/2007	Christopher	
7,298,962	B2	11/2007	Quan	
7,327,885	B2	2/2008	Divakaran et al.	
7,461,392	B2 *	12/2008	Herley	725/19
2002/0010919	A1	1/2002	Lu et al.	
2002/0059580	A1	5/2002	Kalker	
2002/0067730	A1	6/2002	Hinderks	
2002/0069218	A1	6/2002	Sull et al.	
2002/0072966	A1	6/2002	Eldering	
2002/0075402	A1	6/2002	Robson	
2002/0083439	A1	6/2002	Eldering	
2002/0120925	A1	8/2002	Logan	
2002/0126224	A1	9/2002	Lienhart	
2002/0186957	A1	12/2002	Yuen	
2002/0194592	A1	12/2002	Tsuchida et al.	
2003/0001970	A1	1/2003	Petry	
2003/0001977	A1	1/2003	Wang	
2003/0023972	A1	1/2003	Gutta	
2003/0093790	A1	5/2003	Logan et al.	
2003/0115595	A1	6/2003	Stevens et al.	
2003/0122966	A1	7/2003	Markman et al.	
2003/0123841	A1	7/2003	Jeannin	
2003/0192045	A1	10/2003	Fellenstein et al.	
2003/0192046	A1	10/2003	Spehr	
2003/0192050	A1	10/2003	Fellenstein et al.	
2003/0226150	A1	12/2003	Berberet et al.	
2003/0227475	A1	12/2003	Fellenstein et al.	
2004/0001161	A1	1/2004	Herley	
2004/0019904	A1	1/2004	Fellenstein et al.	
2004/0128317	A1	7/2004	Sull et al.	
2004/0194130	A1	9/2004	König	
2004/0226035	A1	11/2004	Hauser	
2004/0228605	A1	11/2004	Quan	
2004/0237102	A1	11/2004	König	
2004/0260682	A1	12/2004	Herley et al.	
2005/0015795	A1 *	1/2005	Iggulden	725/20
2005/0044561	A1	2/2005	McDonald	
2005/0120367	A1	6/2005	Linzer	
2005/0149968	A1	7/2005	König	
2005/0166224	A1 *	7/2005	Ficco	725/35
2005/0172312	A1	8/2005	Lienhart	
2005/0177847	A1	8/2005	König	
2005/0193410	A1	9/2005	Eldering	
2005/0283796	A1	12/2005	Flickinger	
2006/0195861	A1	8/2006	Lee	
2007/0130581	A1 *	6/2007	Del Sesto et al.	725/36
2007/0248224	A1	10/2007	Buskey et al.	

FOREIGN PATENT DOCUMENTS

GB	2361127		10/2001
GB	2361128		10/2001
GB	2365649		2/2002
GB	2399976		9/2004
JP	11185039		7/1999
JP	11213163		8/1999
JP	21024956		1/2001
JP	21111921		4/2001
JP	22329205		11/2002
WO	WO9856128	A1	12/1998
WO	WO9966719	A1	12/1999
WO	WO0036775		6/2000
WO	WO0054504	A1	9/2000
WO	WO00/70869		11/2000
WO	WO0133848		5/2001
WO	WO02/03227		1/2002
WO	WO02102079	A1	12/2002
WO	WO03/052551	A2	6/2003
WO	WO03/105377		12/2003

OTHER PUBLICATIONS

Pua K. M. et al; "Real time repeated video sequence identification", Computer Vision and Image Understanding Academic Press, San Diego, CA, vol. 93, No. 3, Mar. 2004, pp. 310-327.

Naturel, X et al; "A fast shot matching strategy for detecting duplicate sequences in a television stream", Proceedings of the 2nd International Workshop on Computer Vision Meets Databases, Baltimore, MD, International Conference Proceeding Series, Jun. 17, 2005, pp. 21-27. ACM Press, NY.

Rainer Lienhart et al, On the Detection and REcognition of Television Commercials, University of Mannheim, Praktische Informatik vol. IV, Apr. 1997, 509-516, Mannheim, Germany.

Product Literature, "A Feature-Based Algorithm for Detecting and Classifying Production Effects" printed from http://www.c.s.cornell.edu/rdz/Papers/Archive/90070119 on Mar. 26, 2004.

Product Literature, Mork, Peter et al, "Indexing Tamper Resistant Features for Image Copy Detection," printed from the hhtp://www-db.stanford.edu/chenli/rime/demo1.0.html on Mar. 26, 2004; 1999; 5 pp.

IEEE Paper "Localizing and Segmenting Text in Images and Videos" by Lienhart, R. and Wernicke, A., Apr. 2002, 13 pp.

Minerva M. Yeung & Bede Liu, Efficient Matching and Clustering of Video Shots, Sep. 1995, 338-341, Princeton Univeristy, Princeton, NJ.

G. M. Landau and U. Vishkin, Pattern matching in a digitized image. Algorithmica, 12(3/4):375-408, 1994.

Greg Pass, Ramin Zabih, Justin Miller, Comparing Images Using Color Coherence Vectors. ACM Multimedia 1996: 65-73.

Fullà, et al; "Detección de anuncios en secuencias de television"; Universidad Politécnia de Valencia, Dept de Comunicaciones, Oct. 13, 2003, 100 pgs.

Fullà et al, "Detection of TV Commercials"; Technical University of Valencia, pp. 541-544.

Dimitrova, et al; "On Selective Video Content Analysis & Filtering"; IS&T/SPIE Conf. on Storage and Retrieval of Media Databases; Jan. 2000; SPIE vol. 3972; 10 pgs.
Dimitrova, et al; "Applications of Video Content Analysis and Retrieval"; IEEE Multimedia, Jul.-Sep. 2002; pp. 42-54.
Drucker; et al; "Smartskip: Consumer Level Browsing and Skipping of Digital Video Content"; Technology to Help people find information; Minn, MN; Apr. 20-25, 2002; vol. 4, Issue 1; pp. 219-226.
U.S. Appl. No. 11/120,095, Lienhart.
U.S. Appl. No. 11/067,003, König.
U.S. Appl. No. 11/067,196, Eldering.
U.S. Appl. No. 11/135,135, Lienhart.
U.S. Appl. No. 11/112,529, Petersen.
U.S. Appl. No. 09/553,637, filed Apr. 20, 2000, Eldering et al.
U.S. Appl. No. 10/031,268, filed Mar. 23, 2002, Eldering et al.
U.S. Appl. No. 09/568,084, May 1, 2000, Eldering.
U.S. Appl. No. 09/635,539, filed Aug. 10, 2000, Eldering.
U.S. Appl. No. 10/031,142, Nov. 1, 2001, Eldering.
U.S. Appl. No. 09/694,848, filed Oct. 20, 2000, Hamilton.
U.S. Appl. No. 10/049,246, filed Jan. 20, 2002, Hamilton.
U.S. Appl. No. 09/635,544, filed Aug. 10, 2000, Eldering et al.
U.S. Appl. No. 09/712,790, filed Nov. 14, 2000, Eldering et al.
U.S. Appl. No. 09/658,204, Sep. 8, 2000, Eldering.
U.S. Appl. No. 09/680,622, filed Oct. 6, 2000, Flickinger.
U.S. Appl. No. 10/759,620, filed Jan. 16, 2004, Eldering et al.
NextStream, "A Solution for Ad Insertion within a Digital Television Network"; Sep. 2003.
D.C. Hutchison et al., "Application of Second Generation Advanced Multi-media Display Processor (AMDP2) in a Digital Micro-Mirror Array Based HDTV", IEEE, 2001.
E. McGrath, "Digital Insertion of Advertising into a Digital Stream (DID)", International Broadcasting Convention, IEEE 1997.

* cited by examiner

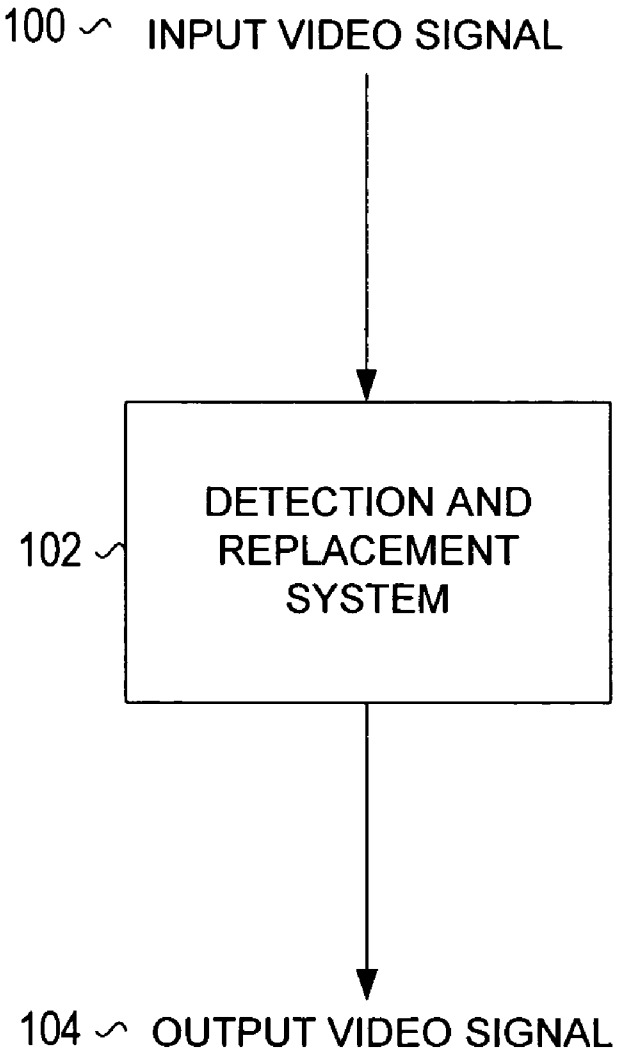
100
INPUT VIDEO SIGNAL
102
DETECTION AND REPLACEMENT SYSTEM
104
OUTPUT VIDEO SIGNAL

FIG. 1

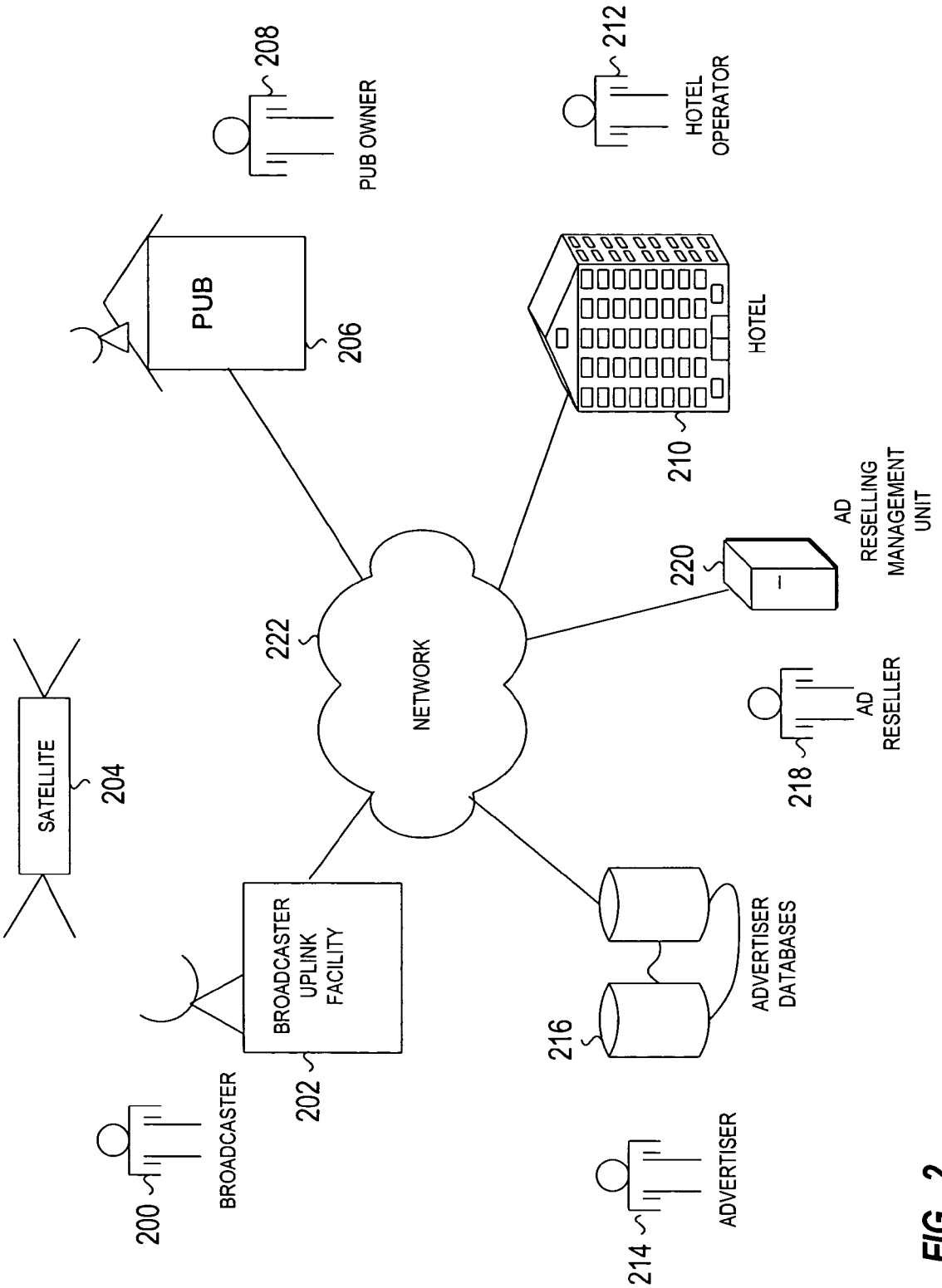
PUB OWNER
208
HOTEL OPERATOR
212
PUB
206
HOTEL
210
AD RESELLING MANAGEMENT UNIT
220
NETWORK
222
AD RESELLER
218
SATELLITE
204
ADVERTISER DATABASES
216
BROADCASTER UPLINK FACILITY
202
BROADCASTER
200
ADVERTISER
214

FIG. 2

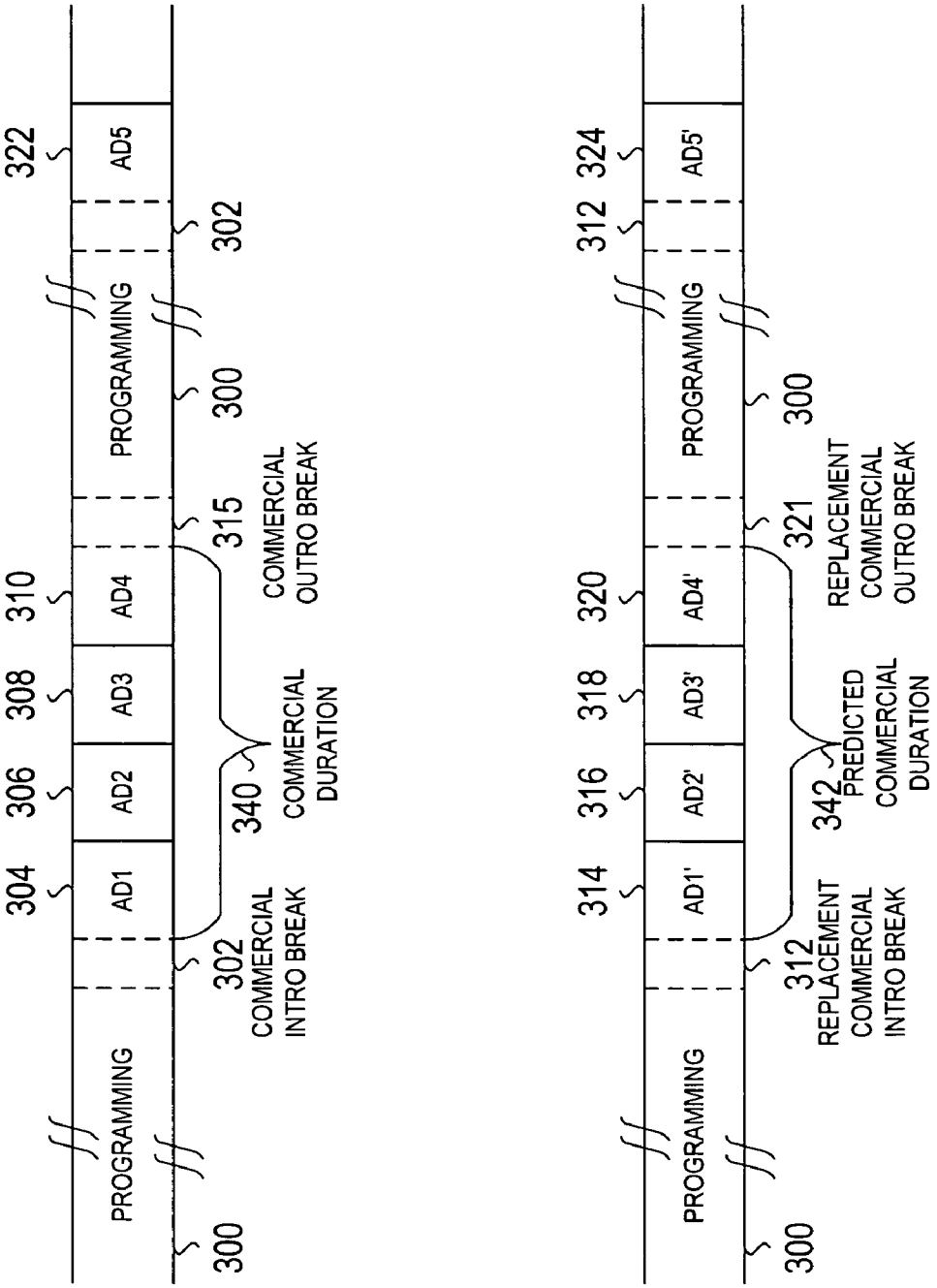
PROGRAMMING
AD1
AD2
AD3
AD4
PROGRAMMING
AD5
300
302
304
306
308
310
322
302
COMMERCIAL INTRO BREAK
340
COMMERCIAL DURATION
315
COMMERCIAL OUTRO BREAK
300
302
PROGRAMMING
AD1'
AD2'
AD3'
AD4'
PROGRAMMING
AD5'
300
312
REPLACEMENT COMMERCIAL INTRO BREAK
342
PREDICTED COMMERCIAL DURATION
321
REPLACEMENT COMMERCIAL OUTRO BREAK
300
312
314
316
318
320
324

FIG. 3

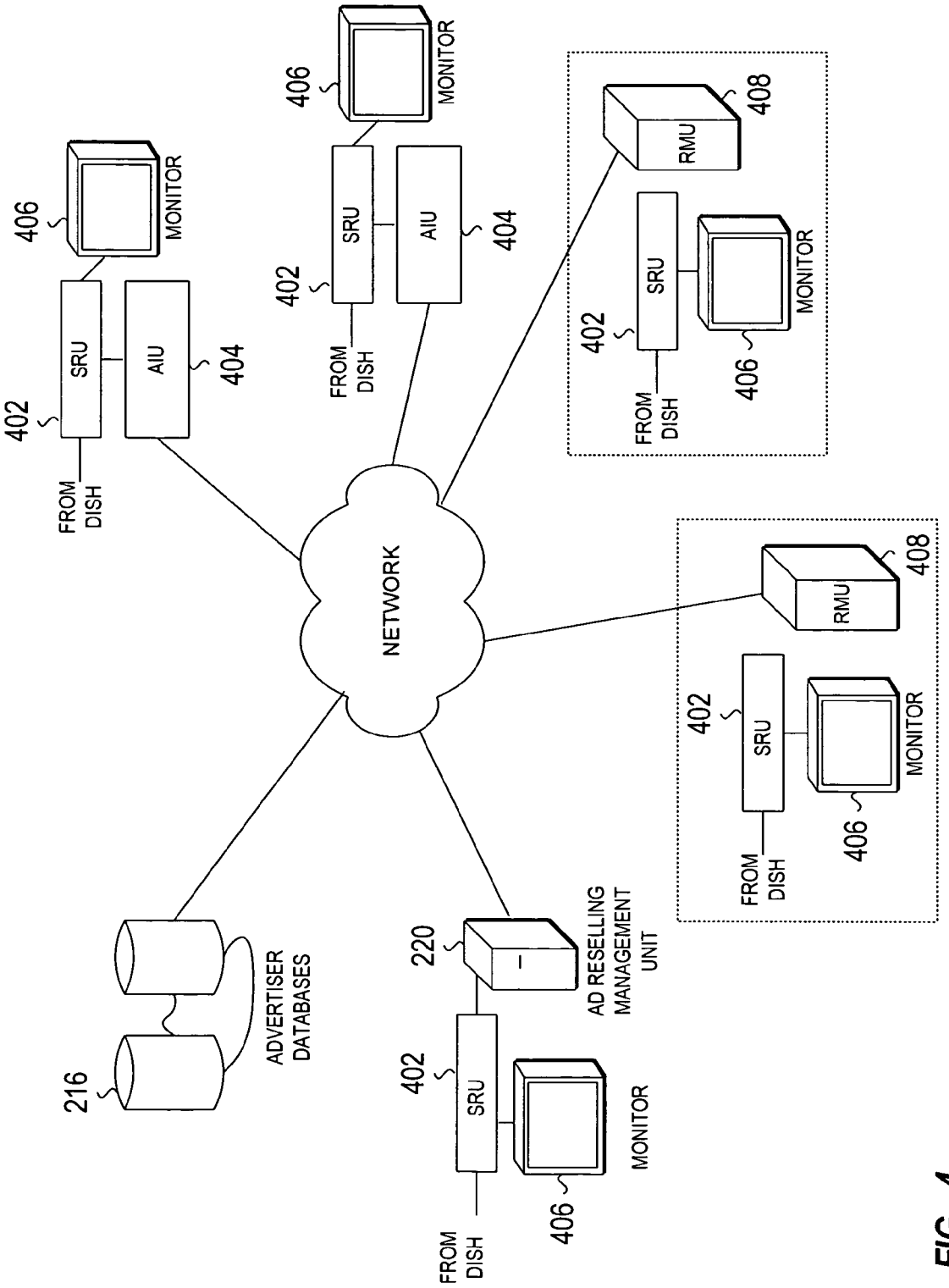
402
SRU
FROM DISH
AIU
404
406
MONITOR
NETWORK
408
RMU
216
ADVERTISER DATABASES
220
AD RESELLING MANAGEMENT UNIT

FIG. 4

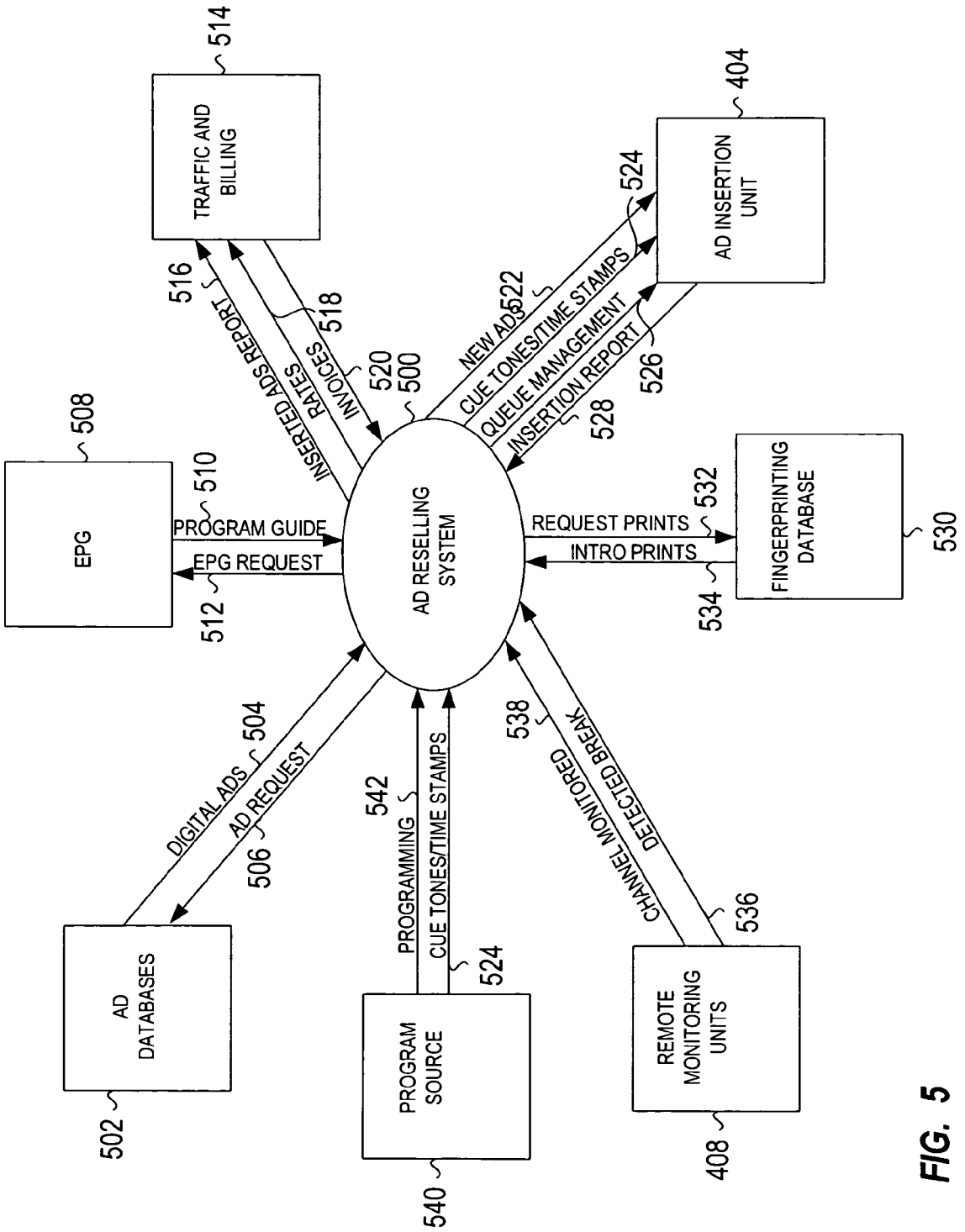
TRAFFIC AND BILLING
514
AD INSERTION UNIT
404
INSERTED ADS REPORT
516
INVOICES
518
RATES
520
500
NEW ADS
522
CUE TONES/TIME STAMPS
524
QUEUE MANAGEMENT
526
INSERTION REPORT
528
EPG
508
PROGRAM GUIDE
510
EPG REQUEST
512
AD RESELLING SYSTEM
REQUEST PRINTS
532
INTRO PRINTS
534
FINGERPRINTING DATABASE
530
DIGITAL ADS
504
AD REQUEST
506
PROGRAMMING
542
CUE TONES/TIME STAMPS
524
CHANNEL MONITORED
538
DETECTED BREAK
536
AD DATABASES
502
PROGRAM SOURCE
540
REMOTE MONITORING UNITS
408

FIG. 5

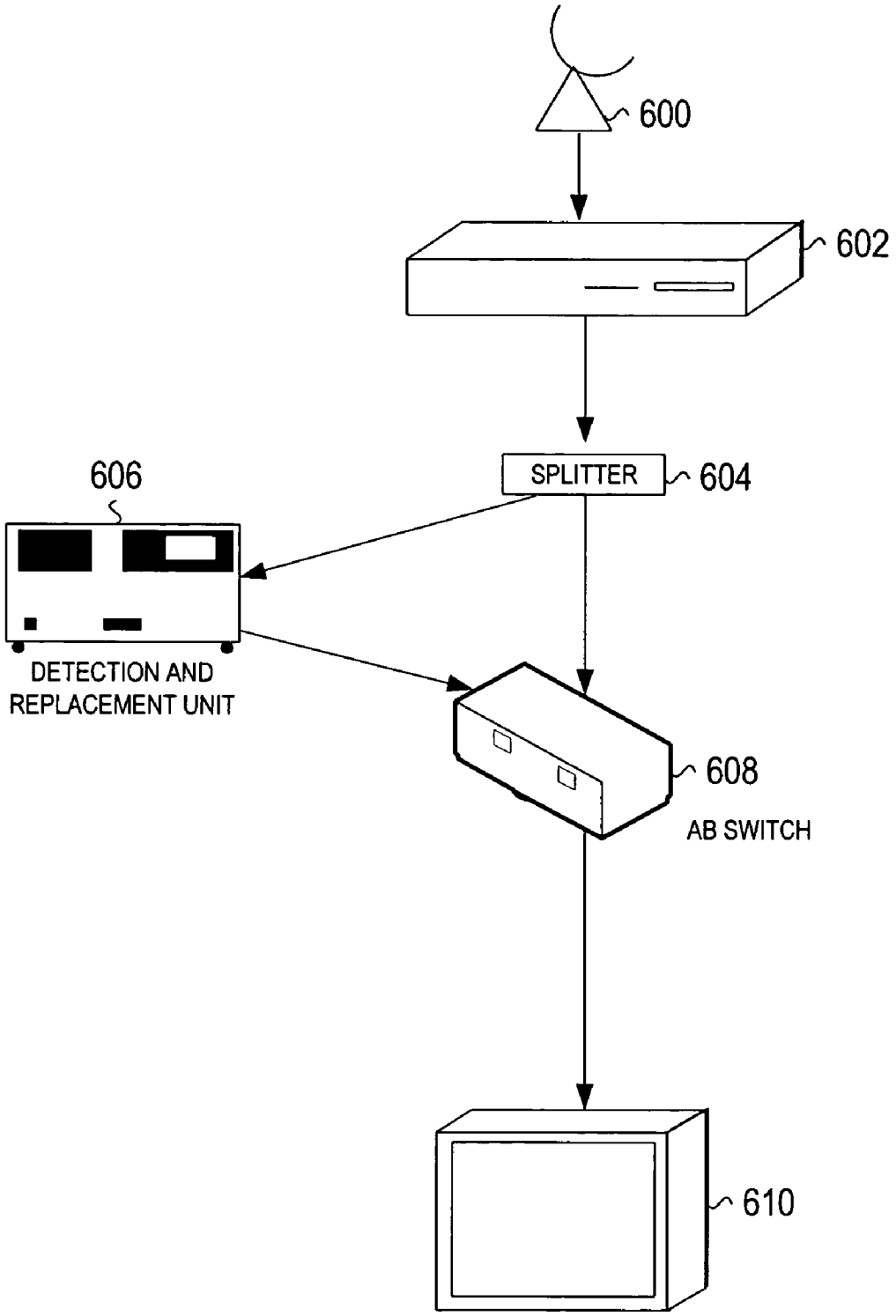
600
602
SPLITTER
604
606
DETECTION AND
REPLACEMENT UNIT
608
AB SWITCH
610

FIG. 6

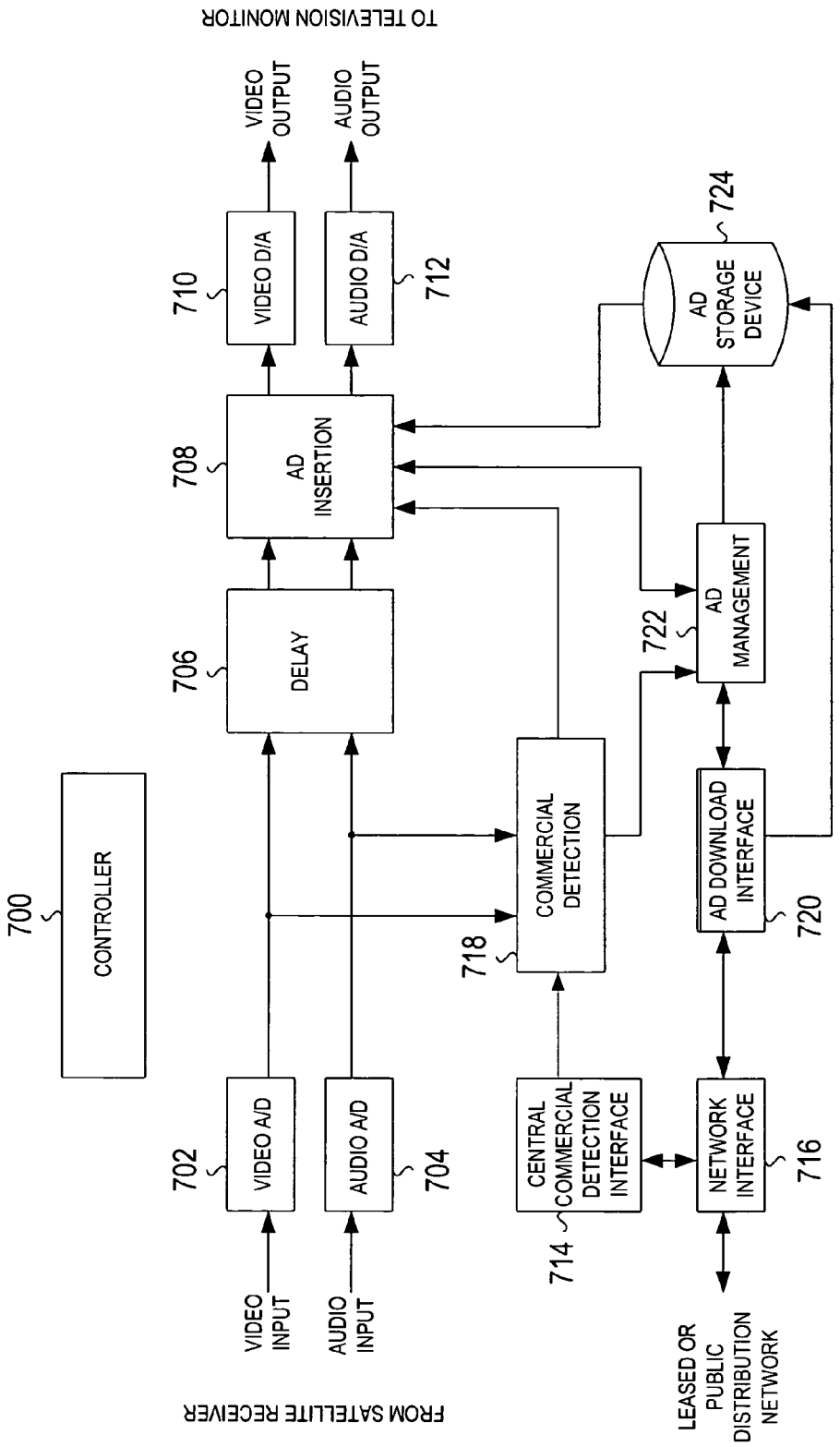
TO TELEVISION MONITOR
VIDEO OUTPUT
AUDIO OUTPUT
710
VIDEO D/A
AUDIO D/A
712
724
AD STORAGE DEVICE
708
AD INSERTION
706
DELAY
722
AD MANAGEMENT
700
CONTROLLER
COMMERCIAL DETECTION
718
AD DOWNLOAD INTERFACE
720
702
VIDEO A/D
AUDIO A/D
704
CENTRAL COMMERCIAL DETECTION INTERFACE
714
NETWORK INTERFACE
716
VIDEO INPUT
AUDIO INPUT
FROM SATELLITE RECEIVER
LEASED OR PUBLIC DISTRIBUTION NETWORK

FIG. 7

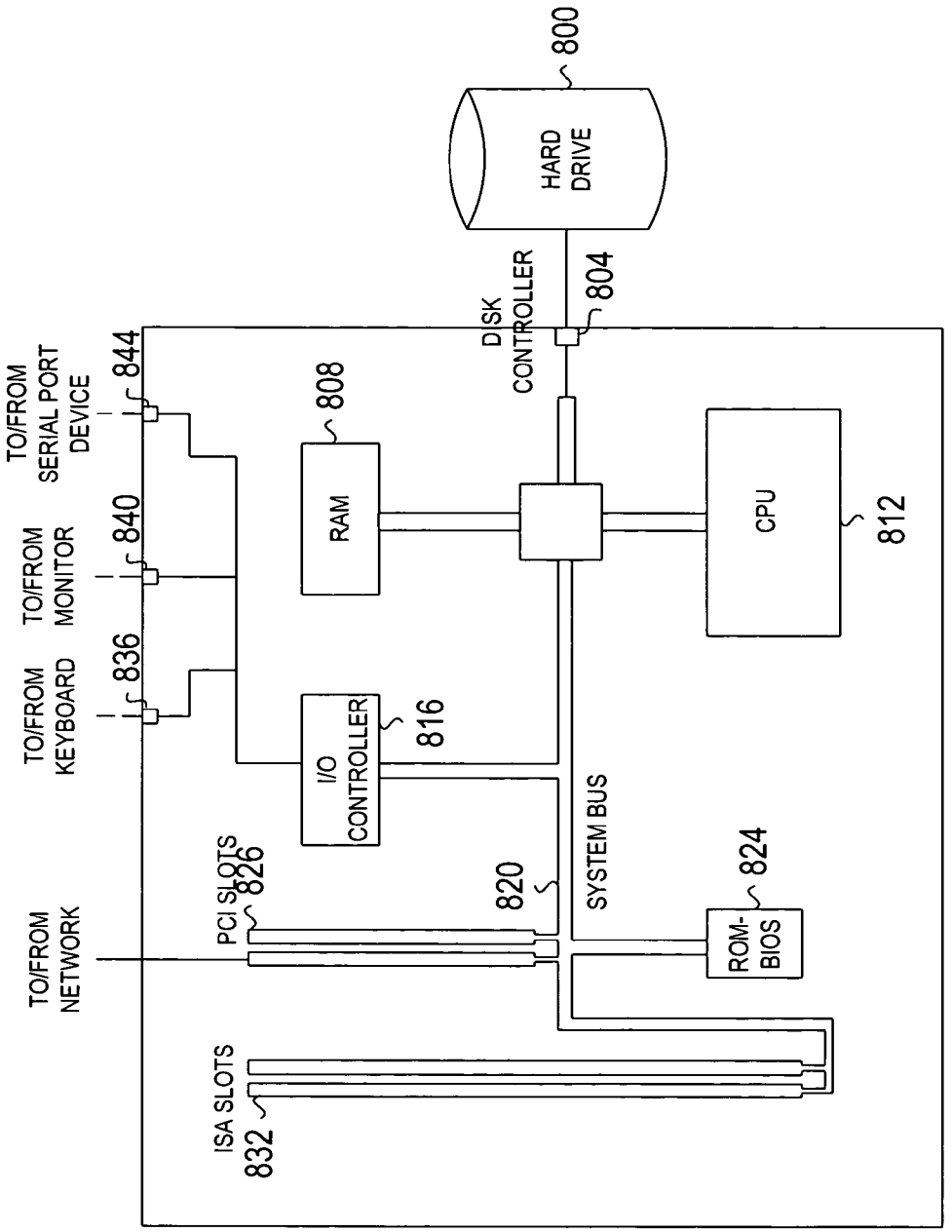
800
HARD DRIVE
DISK CONTROLLER
804
TO/FROM SERIAL PORT DEVICE
844
808
RAM
CPU
812
TO/FROM MONITOR
840
TO/FROM KEYBOARD
836
I/O CONTROLLER
816
SYSTEM BUS
PCI SLOTS
826
820
824
ROM-BIOS
TO/FROM NETWORK
ISA SLOTS
832

FIG. 8

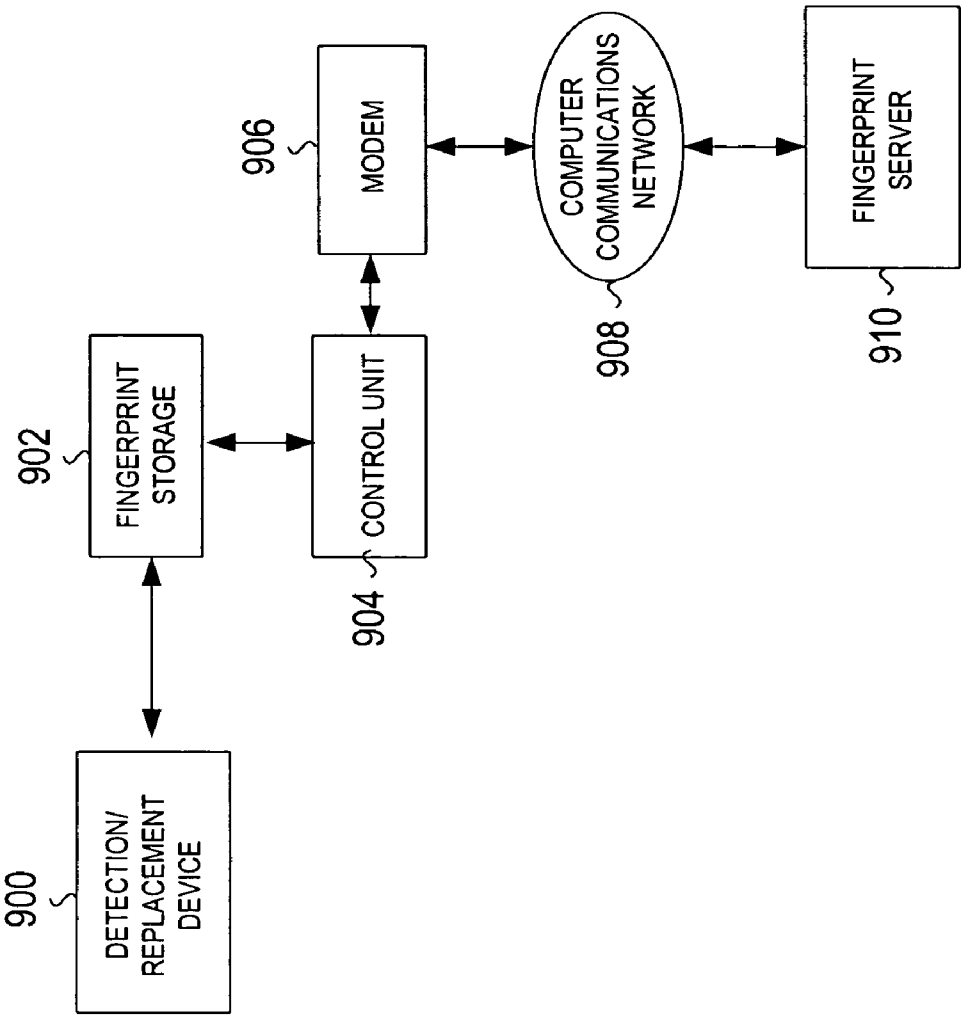
900
DETECTION/ REPLACEMENT DEVICE
902
FINGERPRINT STORAGE
904
CONTROL UNIT
906
MODEM
908
COMPUTER COMMUNICATIONS NETWORK
910
FINGERPRINT SERVER

FIG. 9

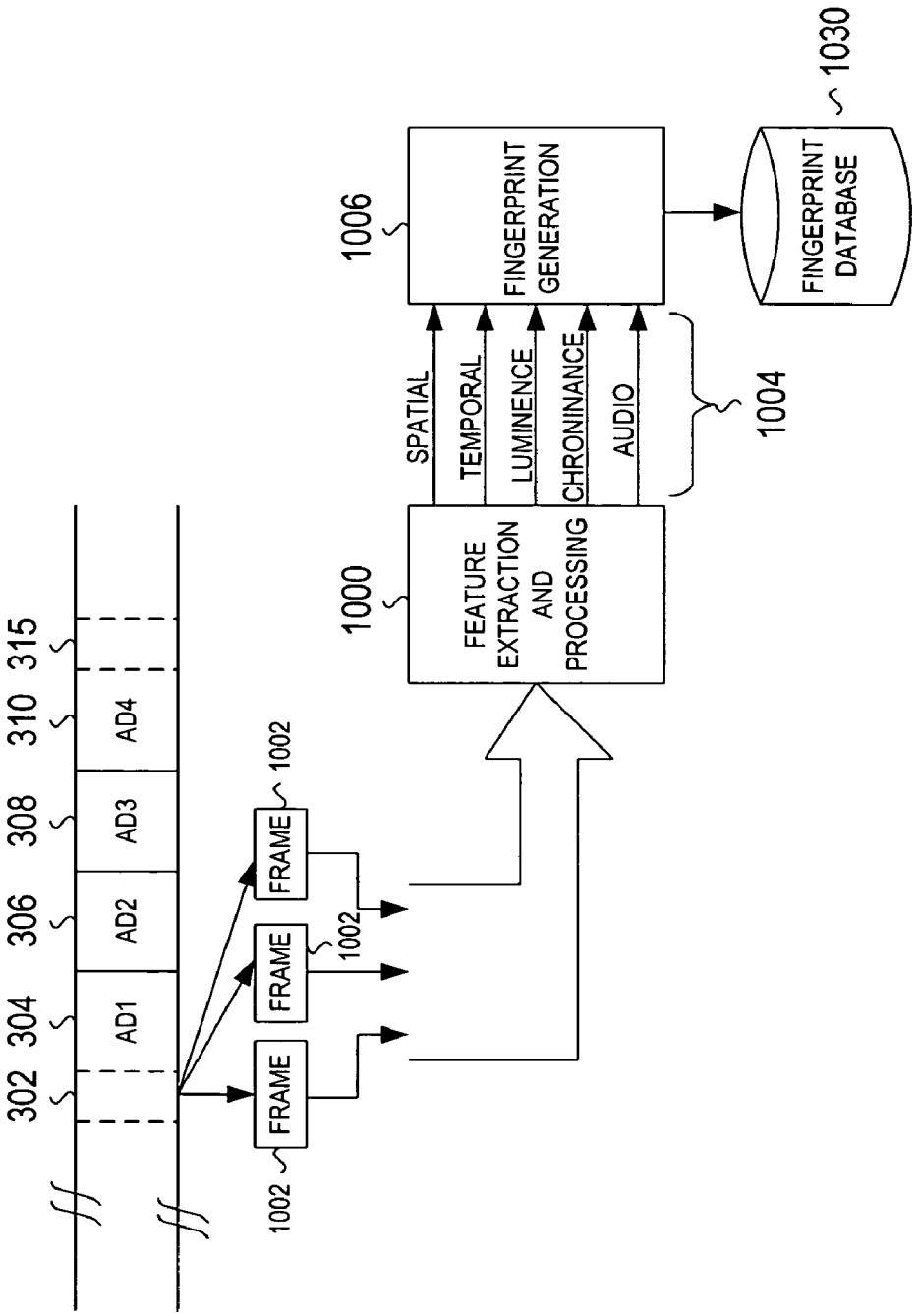
302
304
306
308
310
315
AD1
AD2
AD3
AD4
FRAME
FRAME
FRAME
1002
1002
1002
1000
FEATURE EXTRACTION AND PROCESSING
SPATIAL
TEMPORAL
LUMINENCE
CHRONINANCE
AUDIO
1004
1006
FINGERPRINT GENERATION
FINGERPRINT DATABASE
1030

FIG. 10

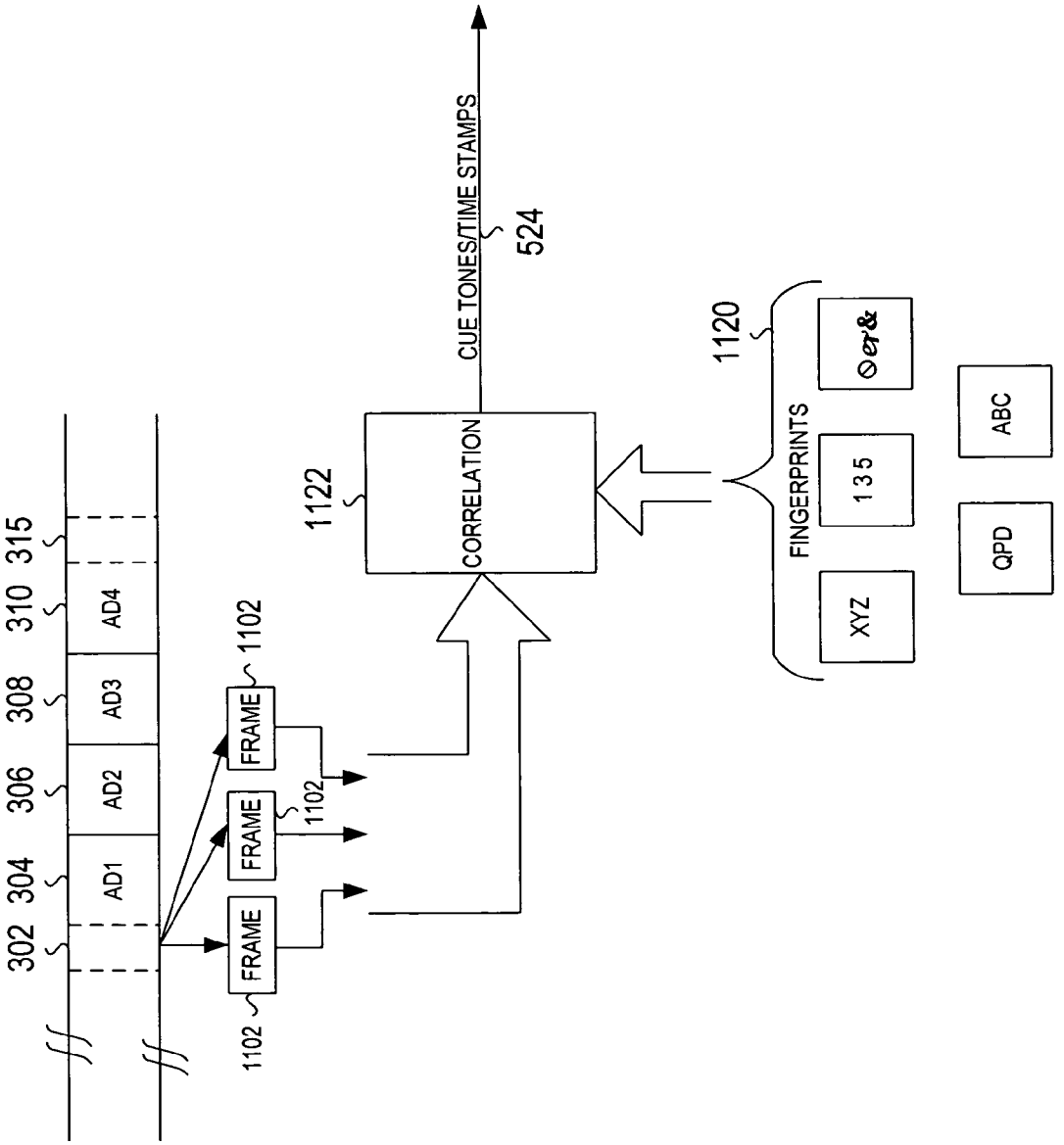
302
304
306
308
310
315
AD1
AD2
AD3
AD4
FRAME
FRAME
FRAME
1102
1102
1102
1122
CORRELATION
CUE TONES/TIME STAMPS
524
1120
FINGERPRINTS
XYZ
135
QPD
ABC

FIG. 11

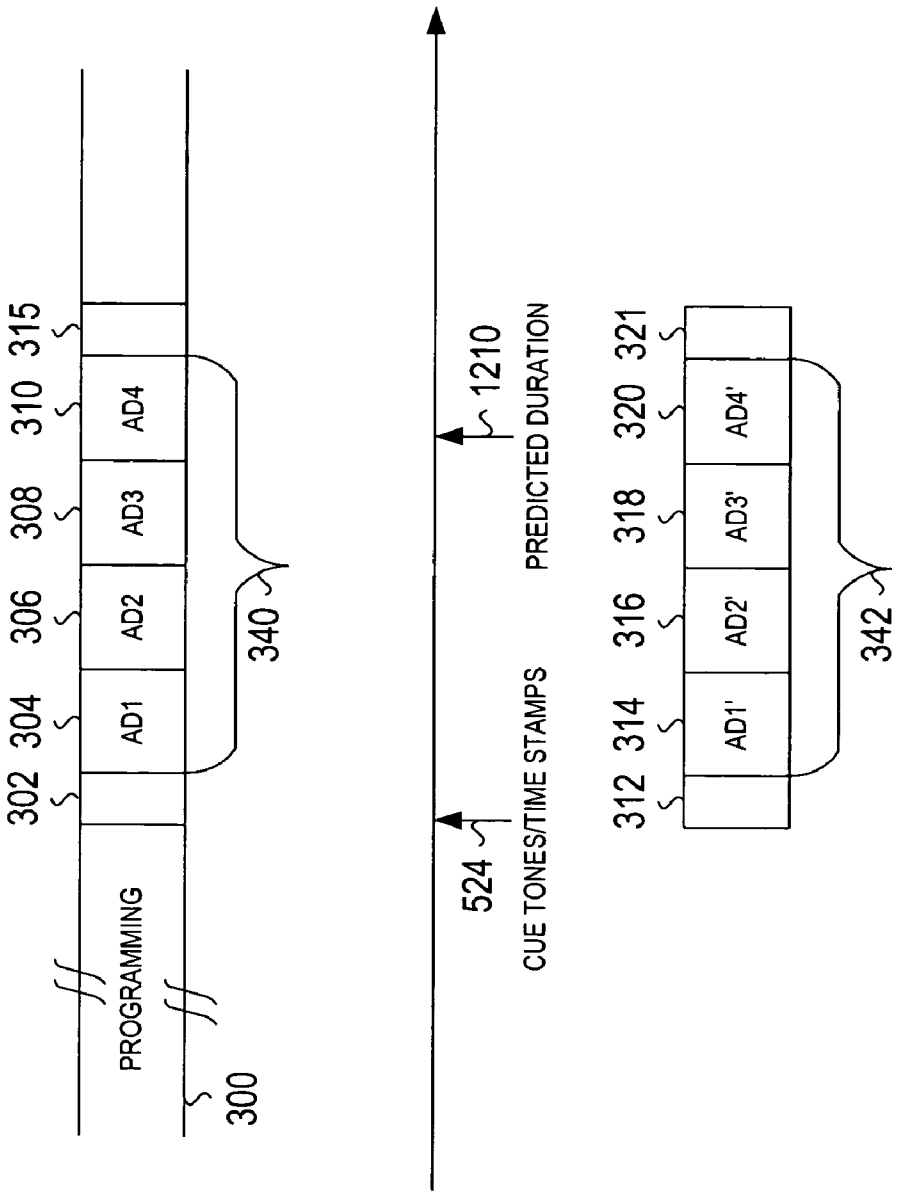
PROGRAMMING
300
302
304
306
308
310
315
AD1
AD2
AD3
AD4
340
524
CUE TONES/TIME STAMPS
1210
PREDICTED DURATION
312
314
316
318
320
321
AD1'
AD2'
AD3'
AD4'
342

FIG. 12

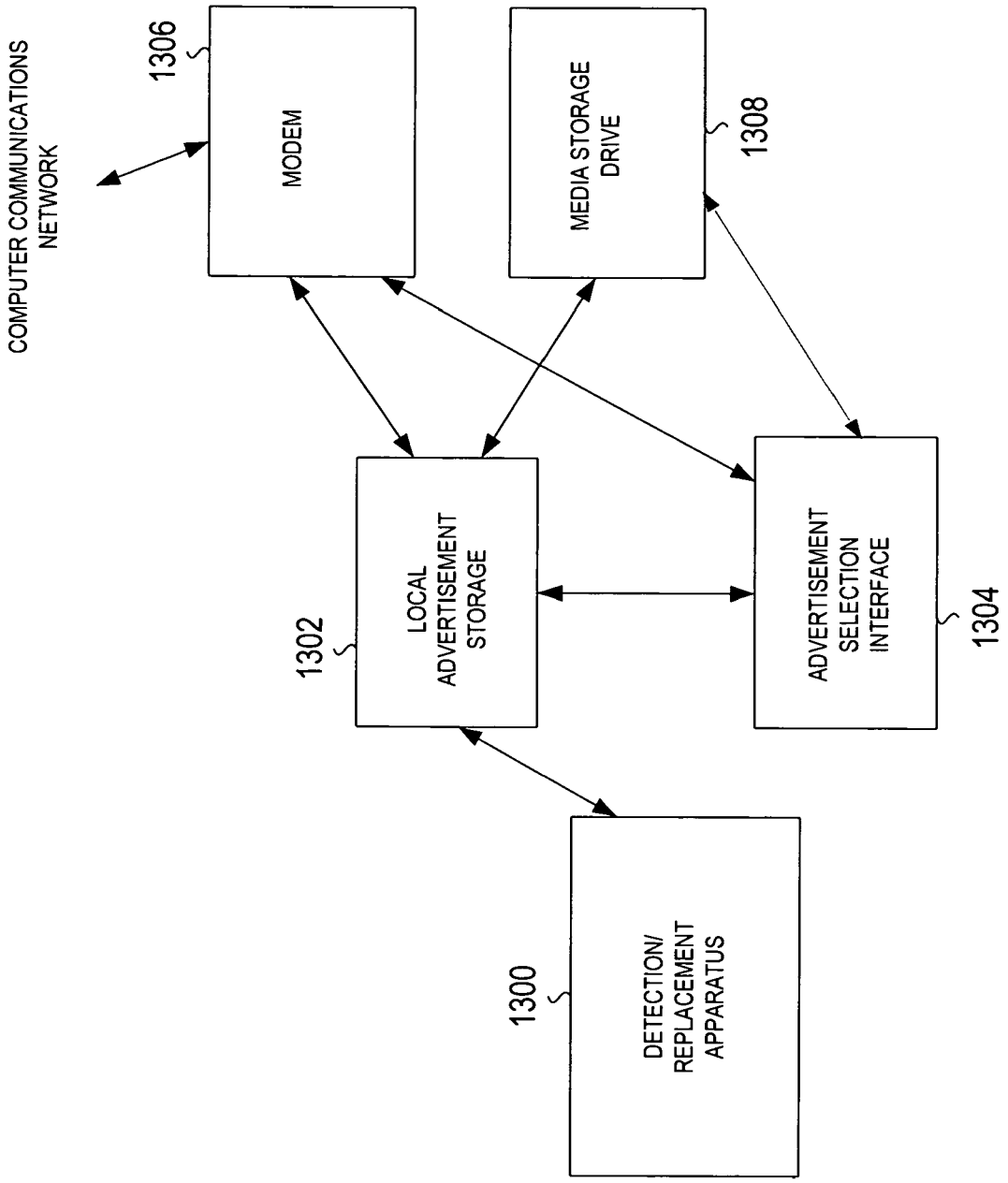
COMPUTER COMMUNICATIONS NETWORK
1306
MODEM
MEDIA STORAGE DRIVE
1308
1302
LOCAL ADVERTISEMENT STORAGE
ADVERTISEMENT SELECTION INTERFACE
1304
1300
DETECTION/ REPLACEMENT APPARATUS

FIG. 13

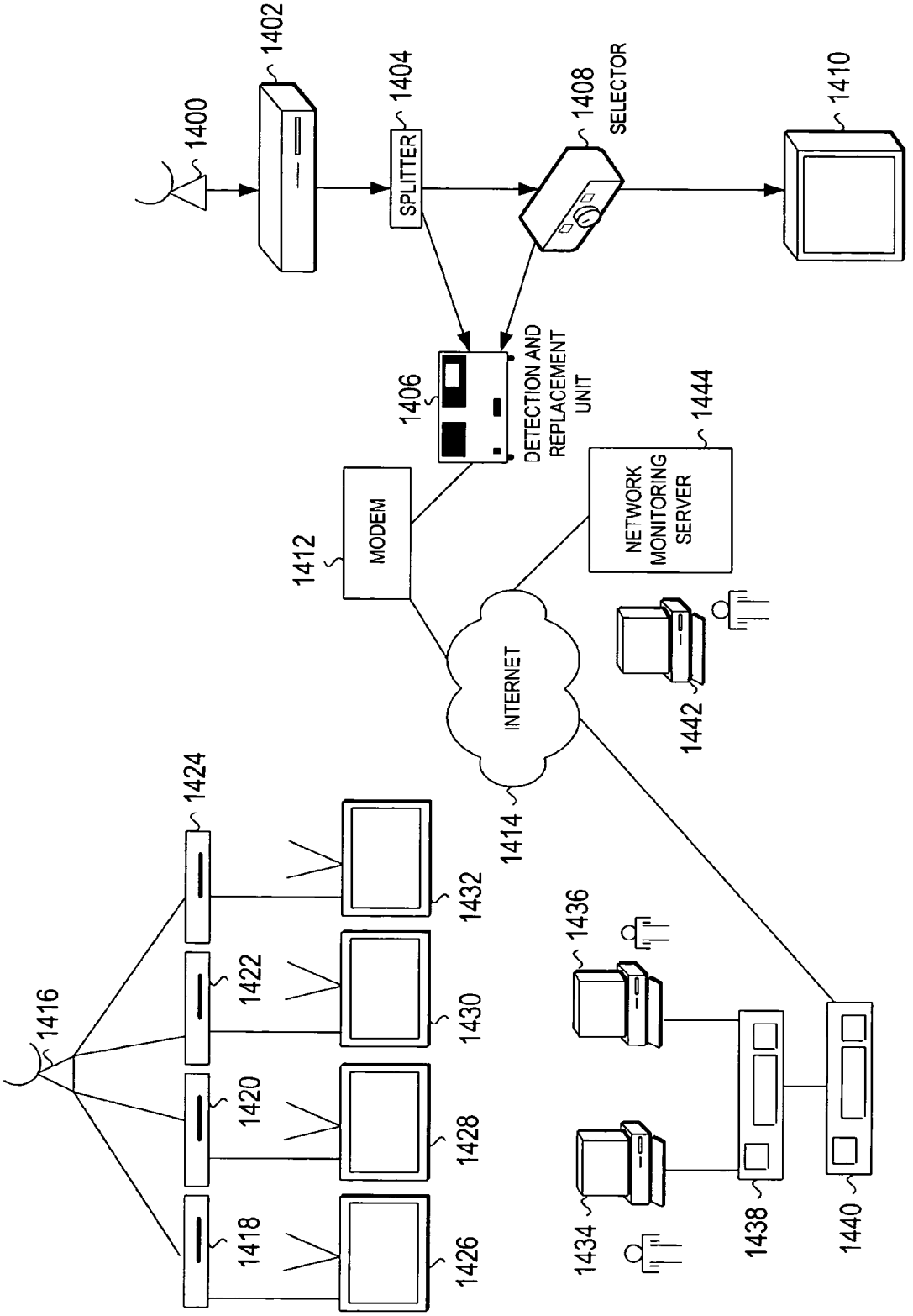
1400
1402
SPLITTER
1404
1408
SELECTOR
1410
1406
DETECTION AND REPLACEMENT UNIT
1412
MODEM
1444
NETWORK MONITORING SERVER
INTERNET
1414
1442
1416
1418
1420
1422
1424
1426
1428
1430
1432
1434
1436
1438
1440

FIG. 14

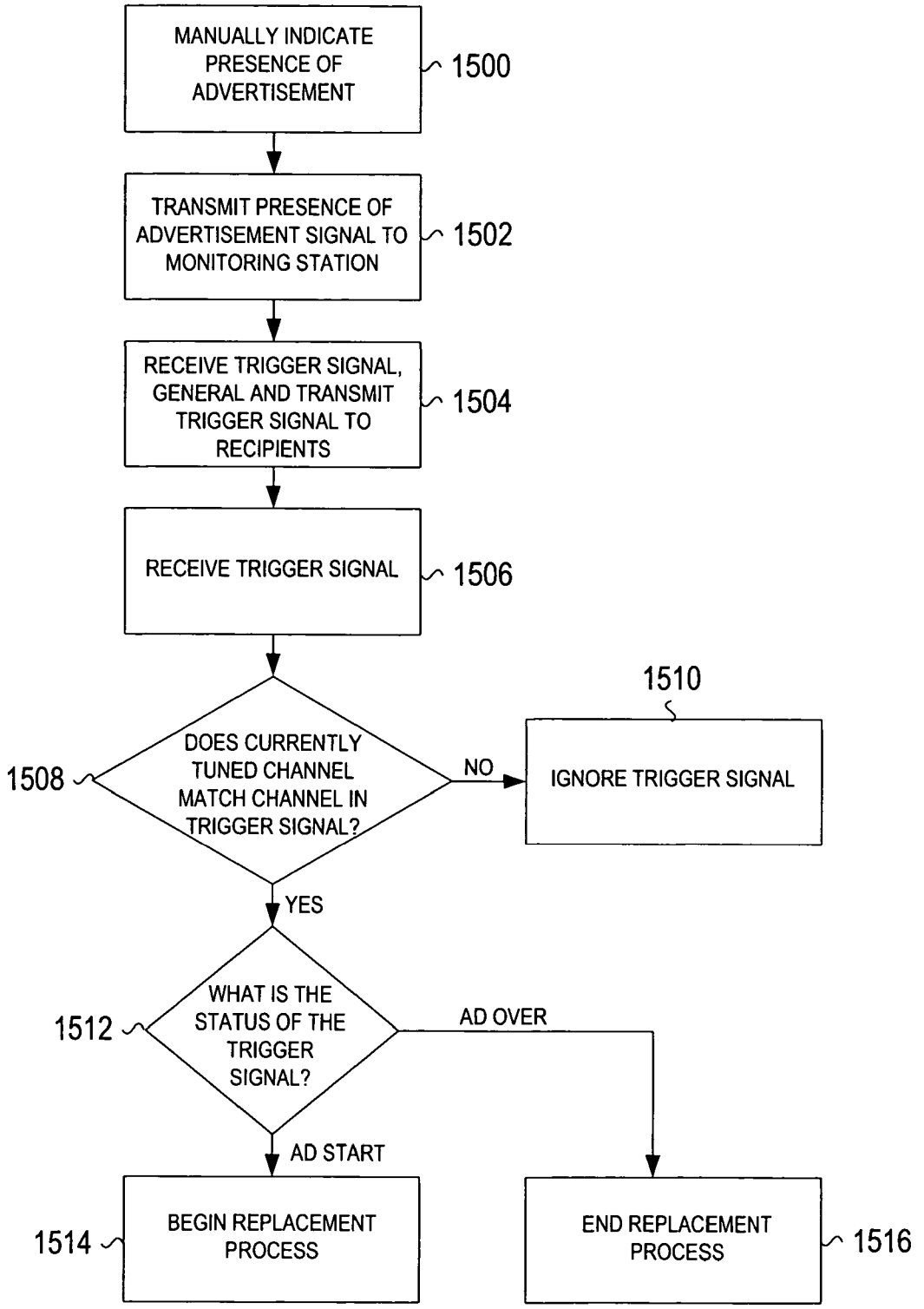
MANUALLY INDICATE PRESENCE OF ADVERTISEMENT
1500
TRANSMIT PRESENCE OF ADVERTISEMENT SIGNAL TO MONITORING STATION
1502
RECEIVE TRIGGER SIGNAL, GENERAL AND TRANSMIT TRIGGER SIGNAL TO RECIPIENTS
1504
RECEIVE TRIGGER SIGNAL
1506
1510
1508
DOES CURRENTLY TUNED CHANNEL MATCH CHANNEL IN TRIGGER SIGNAL?
NO
IGNORE TRIGGER SIGNAL
YES
1512
WHAT IS THE STATUS OF THE TRIGGER SIGNAL?
AD OVER
AD START
1514
BEGIN REPLACEMENT PROCESS
END REPLACEMENT PROCESS
1516

FIG. 15

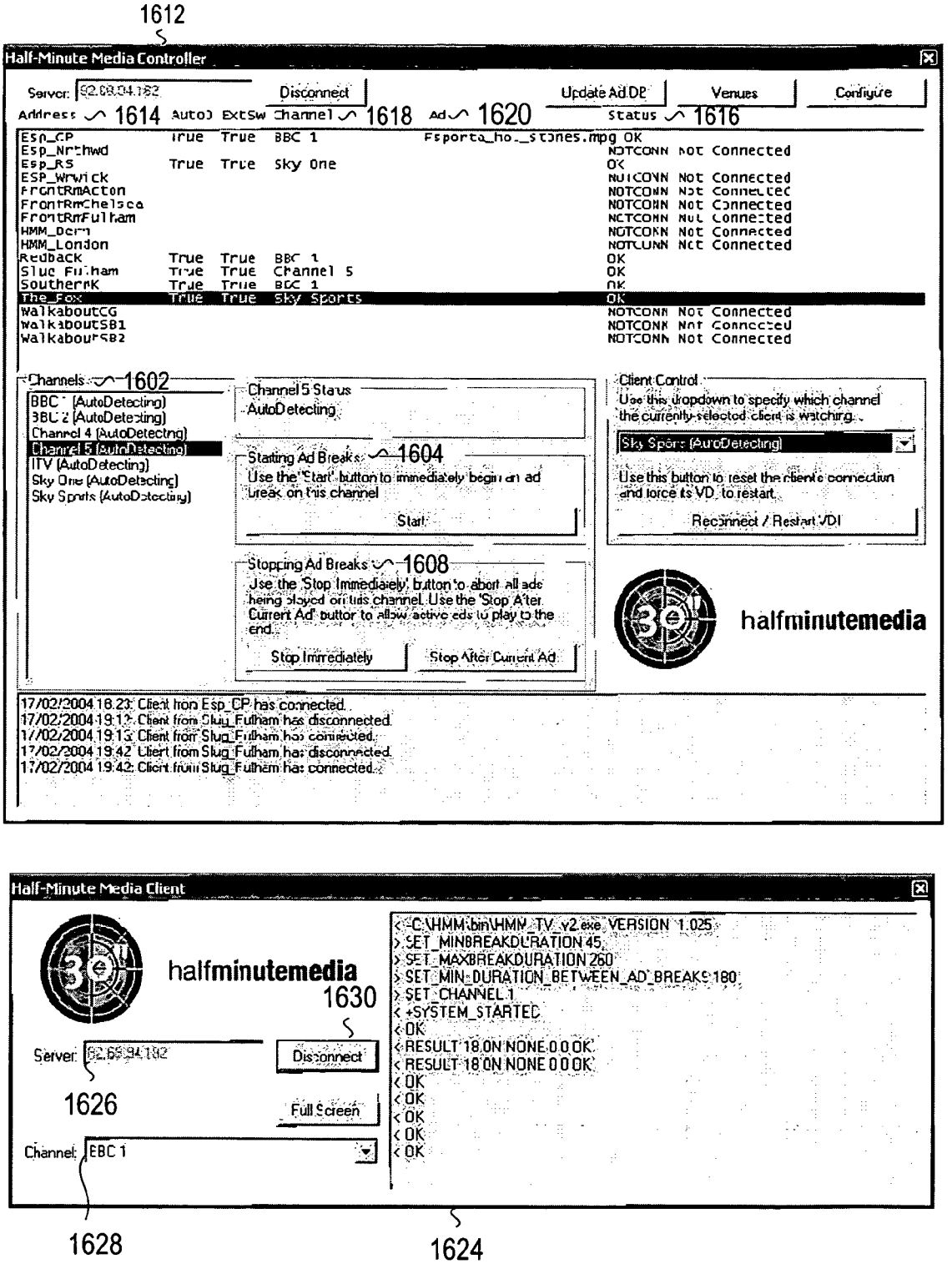
1612
Half-Minute Media Controller
Server:
Disconnect
Update Ad DB
Venues
Configure
Address 1614
Auto
ExtSw
Channel 1618
Ad 1620
Status 1616
Esp_CP True True BBC 1 Esporta_ho._stones.mpg OK
Esp_Northwd NOTCONN Not Connected
Esp_RS True True Sky One OK
ESP_Warwick NOTCONN Not Connected
FrontRmActon NOTCONN Not Connected
FrontRmChelsea NOTCONN Not Connected
FrontRmFulham NOTCONN Not Connected
HMM_Derm NOTCONN Not Connected
HMM_London NOTCONN Not Connected
Redback True True BBC 1 OK
Slug Fulham True True Channel 5 OK
SouthernK True True BBC 1 OK
The_Fox True True Sky Sports OK
WalkaboutCG NOTCONN Not Connected
WalkaboutSB1 NOTCONN Not Connected
WalkaboutSB2 NOTCONN Not Connected
Channels 1602
BBC 1 (AutoDetecting)
BBC 2 (AutoDetecting)
Channel 4 (AutoDetecting)
Channel 5 (AutoDetecting)
ITV (AutoDetecting)
Sky One (AutoDetecting)
Sky Sports (AutoDetecting)
Channel 5 Status
AutoDetecting
Starting Ad Breaks 1604
Use the 'Start' button to immediately begin an ad break on this channel
Start
Stopping Ad Breaks 1608
Use the 'Stop Immediately' button to abort all ads being played on this channel. Use the 'Stop After Current Ad' button to allow active ads to play to the end.
Stop Immediately
Stop After Current Ad
Client Control
Use this dropdown to specify which channel the currently selected client is watching.
Sky Sports (AutoDetecting)
Use this button to reset the client's connection and force its VD to restart.
Reconnect / Restart VDI
halfminutemedia
17/02/2004 18:23: Client from Esp_CP has connected.
17/02/2004 19:12: Client from Slug_Fulham has disconnected.
17/02/2004 19:13: Client from Slug_Fulham has connected.
17/02/2004 19:42: Client from Slug_Fulham has disconnected.
17/02/2004 19:42: Client from Slug_Fulham has connected.
Half-Minute Media Client
halfminutemedia
1630
Server:
Disconnect
1626
Full Screen
Channel:
BBC 1
< C:\HMM\bin\HMM_TV_v2.exe VERSION 1.025
> SET_MINBREAKDURATION 45
> SET_MAXBREAKDURATION 260
> SET_MIN_DURATION_BETWEEN_AD_BREAKS 180
> SET_CHANNEL 1
< +SYSTEM_STARTED
< OK
< RESULT 18 ON NONE 0 0 OK
< RESULT 18 ON NONE 0 0 OK
< OK
< OK
< OK
< OK
< OK
1628
1624

FIG. 16

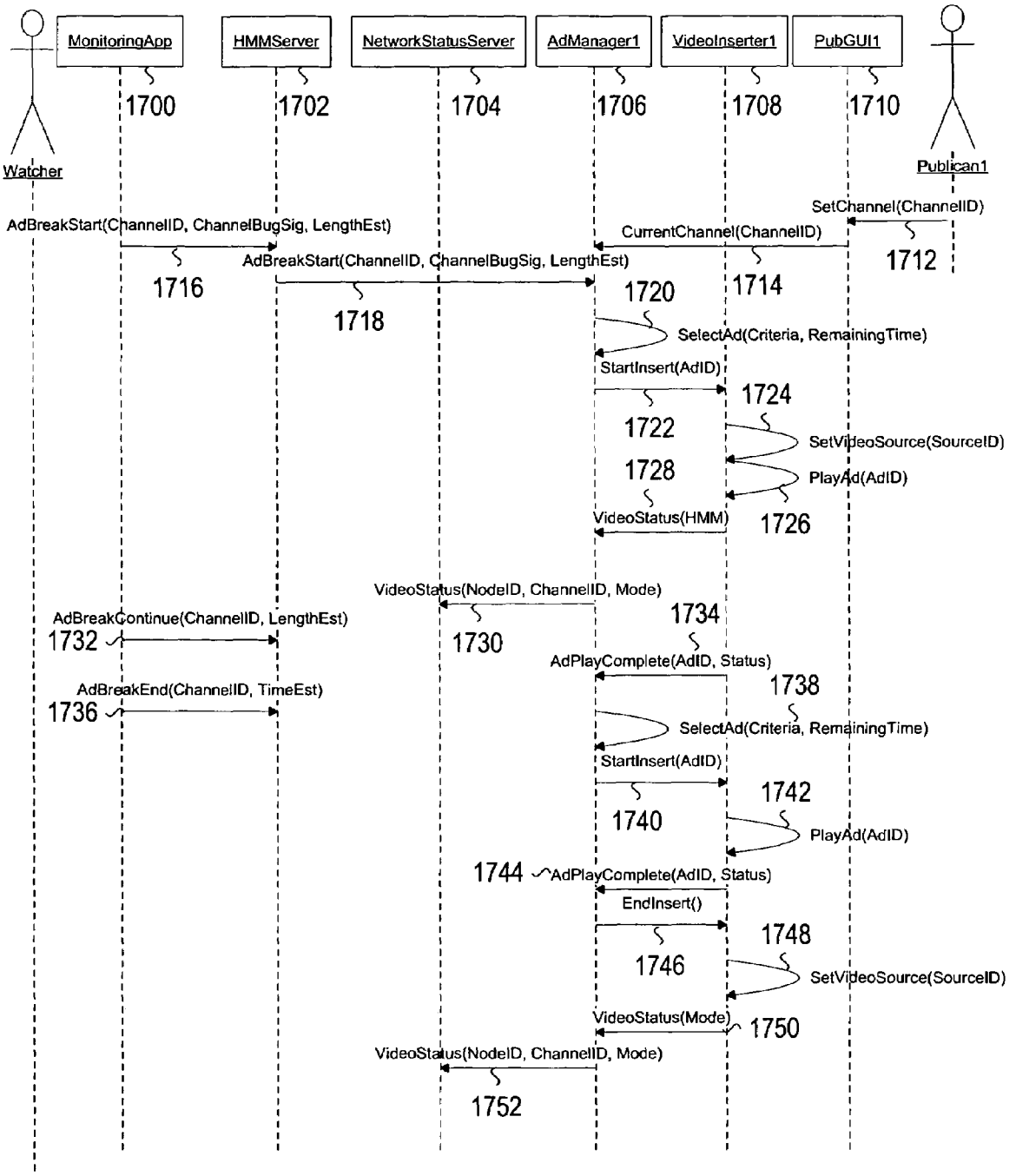
MonitoringApp
HMMServer
NetworkStatusServer
AdManager1
VideoInserter1
PubGUI1
Watcher
Publican1
1700
1702
1704
1706
1708
1710
SetChannel(ChannelID)
1712
AdBreakStart(ChannelID, ChannelBugSig, LengthEst)
CurrentChannel(ChannelID)
1714
1716
AdBreakStart(ChannelID, ChannelBugSig, LengthEst)
1718
1720
SelectAd(Criteria, RemainingTime)
StartInsert(AdID)
1722
1724
SetVideoSource(SourceID)
1728
PlayAd(AdID)
VideoStatus(HMM)
1726
VideoStatus(NodeID, ChannelID, Mode)
1730
1734
AdBreakContinue(ChannelID, LengthEst)
1732
AdPlayComplete(AdID, Status)
1738
AdBreakEnd(ChannelID, TimeEst)
1736
SelectAd(Criteria, RemainingTime)
StartInsert(AdID)
1740
1742
PlayAd(AdID)
1744
AdPlayComplete(AdID, Status)
EndInsert()
1746
1748
SetVideoSource(SourceID)
VideoStatus(Mode)
1750
VideoStatus(NodeID, ChannelID, Mode)
1752

FIG. 17

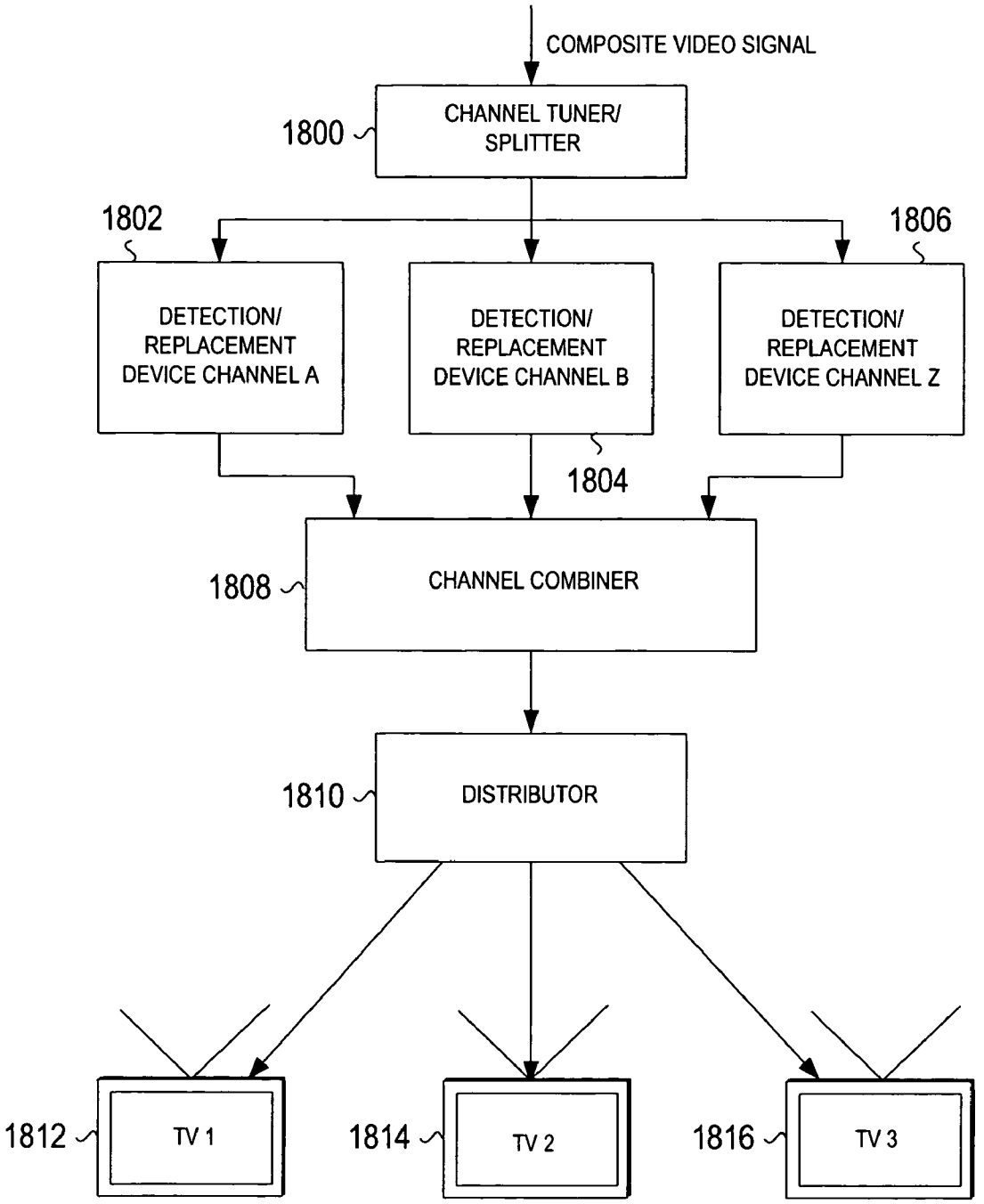
COMPOSITE VIDEO SIGNAL
1800
CHANNEL TUNER/ SPLITTER
1802
1806
DETECTION/ REPLACEMENT DEVICE CHANNEL A
DETECTION/ REPLACEMENT DEVICE CHANNEL B
DETECTION/ REPLACEMENT DEVICE CHANNEL Z
1804
1808
CHANNEL COMBINER
1810
DISTRIBUTOR
1812
TV 1
1814
TV 2
1816
TV 3

FIG. 18

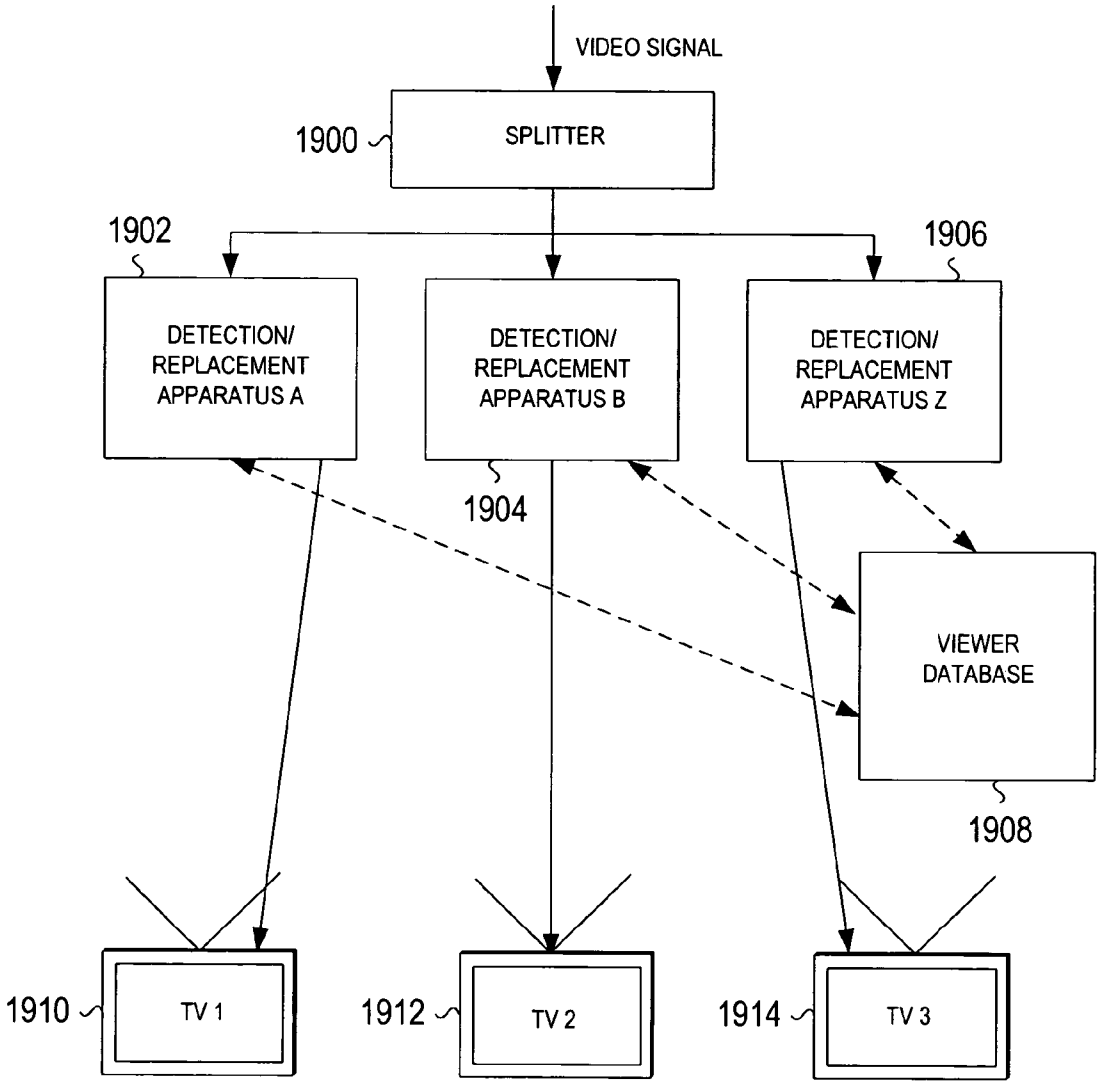
VIDEO SIGNAL
1900
SPLITTER
1902
1906
DETECTION/ REPLACEMENT APPARATUS A
DETECTION/ REPLACEMENT APPARATUS B
DETECTION/ REPLACEMENT APPARATUS Z
1904
VIEWER DATABASE
1908
1910
TV 1
1912
TV 2
1914
TV 3

FIG. 19

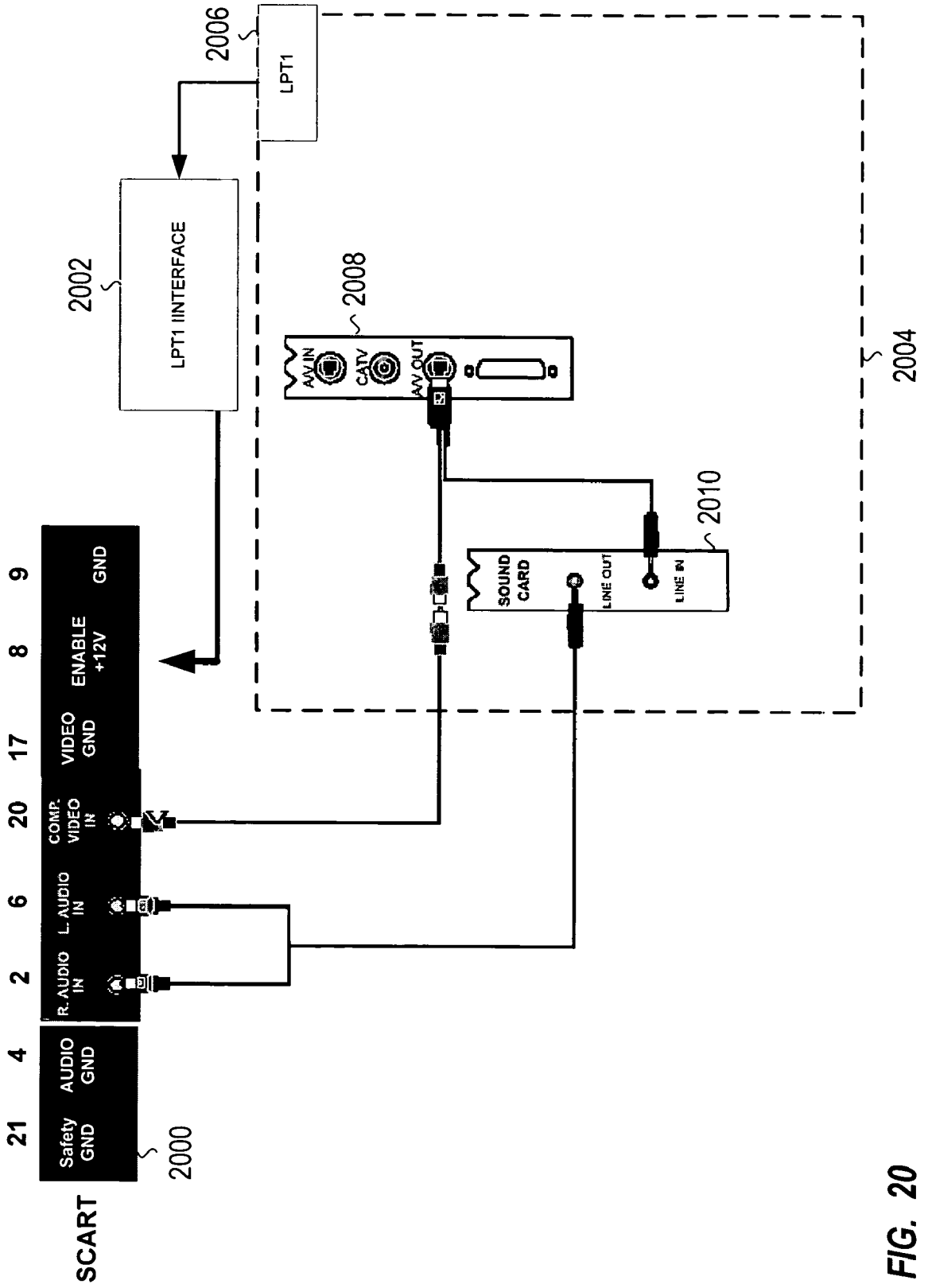
2006
LPT1
2002
LPT1 IINTERFACE
2008
A/V IN
CATV
A/V OUT
2004
2010
SOUND CARD
LINE OUT
LINE IN
9
8
17
20
6
2
4
21
GND
ENABLE +12V
VIDEO GND
COMP. VIDEO IN
L. AUDIO IN
R. AUDIO IN
AUDIO GND
Safety GND
2000
SCART

FIG. 20

VIDEO DETECTION AND INSERTION

CROSS-REFERENCE TO RELATED APPLICATIONS

This patent application claims priority to the provisional patent application entitled, "System and Method for Advertisement Substitution in Broadcast and Prerecorded Video Streams" filed on Mar. 7, 2003, Ser. No. 60/452,802, which is incorporated by reference herein. This patent application also claims priority to the provisional patent application entitled, "Video Detection and Insertion," filed on Oct. 14, 2003, Ser. No. 60/510,896, which is also incorporated by reference herein.

This patent application is related to the patent applications entitled "Method and System for Advertisement Detection and Substitution" filed herewith, attorney docket number HMM-100 and "Advertisement Substitution" filed herewith, attorney docket number HMM-101.

BACKGROUND OF THE INVENTION

The present invention is directed to a system, method, and computer readable storage for detecting segments such as advertisements in a video signal and replacing the detected segments with replacement portions such as targeted advertisements.

Advertisements are commonplace in most broadcast video, including video received from satellite transmissions, cable television networks, over-the-air broadcasts, and digital subscriber line (DSL) systems. Advertising plays an important role in the economics of entertainment programming in that advertisements are used to subsidize or pay for the development of the content. As an example, broadcast of sports such as football games, soccer games, basketball games and baseball games is paid for by advertisers. Even though subscribers may pay for access to that sports programming, such as through satellite or cable network subscriptions, the advertisements appearing during the breaks in the sport are sold by the network producing the transmission of the event.

In some countries, such as the United Kingdom, sports events are frequently viewed in public locations such as pubs and bars. Pubs, generally speaking, purchase a subscription from a satellite provider for reception of sports events. This subscription allows for the presentation of the sports event in the pub to the patrons. The advertising to those patrons may or may not be appropriate depending on the location of the pub, the make up of the clientele, the local environment, or other factors. The advertising may even promote products and services which compete with those stocked or offered by the owner of the pub. To date, no system or method has been developed to allow the pub owner to automatically and accurately substitute existing ads and resell more appropriate advertising.

Another environment in which advertising is presented to consumers through a commercial establishment is in hotels. In hotels, consumers frequently watch television in their rooms and are subjected to the defacto advertisements placed in the video stream. Hotels sometimes have internal channels containing advertising directed at the guests, but this tends to be an "infomercial" channel that does not have significant viewership. As is the case for pubs, the entertainment programming video streams may be purchased on a subscription basis from satellite or cable operator, or may simply be taken from over-the-air broadcasts. In some cases, the hotel operator offers Video on Demand (VoD) services, allowing consumers to choose a movie or other program for their particular viewing. These movies are presented on a fee basis, and although there are typically some types of advertising before the movie, viewers are not subjected to advertising during the movie. To date, no system or method has been introduced which allows establishments such as hotels and hospitals to increase the effectiveness of their advertising opportunities based on the captive audience. Similarly, no system has yet been introduced which allows hotel operators to ensure that advertisements for competitors' products and services are not shown to guests in their premises.

Hospitals also provide video programming to the patients, who may pay for the programming based on a daily fee, or in some instances on a pay-per-view basis. The advertising in the programming is not specifically directed at the patients, but is simply the advertising put into the programming by the content provider.

Residential viewers are also presented advertisements in the vast majority of programming they view. These advertisements may or may not be the appropriate advertisements for that viewer or family. Various methods have been developed to provide for the switching of channels during advertising opportunities, such that the user is forced to watch an advertisement different than that presented in the original programming, and are known as "forced channel tuning" techniques. These techniques suffer from a fundamental bandwidth constraint in that extra channels are needed to carry alternate advertisements. These channels occupy bandwidth that would ordinarily be used for revenue generating programming including Pay-Per-View (PPV) or VoD channels. Transport of alternate advertisements thus "robs" bandwidth from other revenue generating opportunities.

The advent of the Personal Video Recorder (PVR) also provides for the opportunity to replace advertisements, although PVRs also allow consumers to simply skip over the ads, either by fast-forwarding, or in some cases through the use of an "ad-skip" feature on the PVR.

For the foregoing reasons, there is a need for a system and method that allows for the insertion of advertisements in video streams, and in particular in video streams presented to audiences that do not have the ability to fast-forward through the advertisements. There is also a need for a system which allows advertisements to be better targeted to audiences and for the ability for operators of commercial premises to cross-market services and products to the audience. Additionally, there is a need for a system which enables the operators of commercial premises to eliminate and substitute advertising of competitors' products and services included in broadcasts shown to guests on their premises.

SUMMARY OF THE INVENTION

It is an aspect of the present invention to provide an improved system for detecting segments in video programming and replacing the detected segments with a replacement portion.

The above aspects can be obtained by a method that includes (a) receiving an input video signal; (b) automatically identifying a segment in the input video signal locally using fingerprint data of both the segment and the input video signal; and (c) generating an output video signal comprising the input video signal with the segment replaced with a replacement portion.

The above aspects can also be obtained by a method that includes (a) analyzing video segments and computing fingerprint data; (b) storing the fingerprint data in a database; and (c) transmitting the fingerprint data to subscribers on a computer communications network.

The above aspects can also be obtained by a method that includes (a) creating a fingerprint of a portion of an incoming video stream; (b) retrieving at least one stored fingerprint, wherein the stored fingerprint represents a known video segment; (c) comparing the fingerprint with the at least one stored fingerprint to determine the presence of a known video segment in the incoming video stream; and (d) replacing the known video segment in the incoming stream with a replacement video segment.

The above aspects can also be obtained by an apparatus that includes (a) an analyzer analyzing video segments and computing fingerprint data; (b) a fingerprint database storing the fingerprint data; and (c) a transmitting unit transmitting the fingerprint data to requestors on a computer communications network.

The above aspects can also be obtained by an apparatus that includes (a) an identifying unit identifying a segment in an input video signal using fingerprint data; (b) a replacing unit replacing the segment in the input video signal with a replacement portion to generate an output video signal; and (c) an output unit generating the output video signal.

BRIEF DESCRIPTION OF THE DRAWINGS

Further features and advantages of the present invention, as well as the structure and operation of various embodiments of the present invention, will become apparent and more readily appreciated from the following description of the preferred embodiments, taken in conjunction with the accompanying drawings of which:

FIG. **1** is a block diagram illustrating a general principle of the present invention, according to an embodiment of the present invention;

FIG. **2** is a block diagram representing a user-relationship, according to an embodiment of the present invention;

FIG. **3** is a time-frame diagram representing a programming stream with initial and substituted advertisements, according to an embodiment of the present invention;

FIG. **4** is a block diagram representing a network of one embodiment of the system, according to an embodiment of the present invention;

FIG. **5** is a block diagram illustrating an ad reselling system, according to an embodiment of the present invention;

FIG. **6** is a block diagram illustrating an example of a local configuration of the present invention, according to an embodiment of the present invention;

FIG. **7** is a block diagram illustrating an example of an ad insertion unit, according to an embodiment of the present invention;

FIG. **8** is a block diagram illustrating a computer implementing an ad reselling system, according to an embodiment of the present invention;

FIG. **9** is a block diagram illustrating an example of a fingerprint data maintenance apparatus, according to an embodiment of the present invention;

FIG. **10** is a block diagram illustrating a fingerprint database creation system, according to an embodiment of the present invention;

FIG. **11** is a block diagram illustrating a use of fingerprints in a correlation algorithm to generate cue tones or time stamps, according to an embodiment of the present invention;

FIG. **12** is a time frame diagram representing a measurement of predicted duration of commercials, according to an embodiment of the present invention;

FIG. **13** is a block diagram illustrating a system for maintaining local replacement segments, according to an embodiment of the present invention;

FIG. **14** is a block diagram illustrating an example of a remote manual triggering configuration, according to an embodiment of the present invention;

FIG. **15** is a flowchart illustrating a method of using remote manual triggering to identify advertisements, according to an embodiment of the present invention;

FIG. **16** is a screen shot illustrating one example of user interfaces, according to an embodiment of the present invention;

FIG. **17** is a sequence diagram illustrating a typical operation of the present invention, according to an embodiment of the present invention;

FIG. **18** is a block diagram illustrating apparatus for processing a composite video signal, according to an embodiment of the present invention;

FIG. **19** is a block diagram illustrating an apparatus for targeting replacement portions based on a destination of the replacement portion, according to an embodiment of the present invention;

FIG. **20** is a circuit diagram illustrating connecting an ad inserter PC, according to an embodiment of the present invention.

DETAILED DESCRIPTION OF PREFERRED EMBODIMENTS OF THE INVENTION

In describing an embodiment of the invention illustrated in the drawings, specific terminology will be used for the sake of clarity. However, the invention is not intended to be limited to the specific terms so selected, and it is to be understood that each specific term includes all technical equivalents which operate in a similar manner to accomplish a similar purpose.

Reference will now be made in detail to the presently preferred embodiments of the invention, examples of which are illustrated in the accompanying drawings, wherein like reference numerals refer to like elements throughout.

The present invention relates to a system for replacing an advertisement in a video signal with a replacement advertisement, although the invention is not limited to advertisements. Generic advertisements can be replaced by the system with advertisements either targeted specifically to the viewer or a group of viewers, or replaced with advertisements which better serve the operators of the replacement system.

As a particular example of one embodiment of the present invention, suppose a viewer is watching a football game which contains an advertisement for a compact car. The replacement system can replace the automobile advertisement with a targeted advertisement for the viewer. For example, if the system knows the viewer is a wealthy male in his 40's, an advertisement for a luxury car can be substituted, which would be more effective than the generic advertisement. As another example, viewers in a pub may watch a video broadcast in which the generic advertisements can be replaced with advertisements chosen by the pub for a particular beer. As yet another example, viewers tuning a television in a hotel or hospital can be subjected to targeted advertisements as well.

FIG. **1** is a block diagram illustrating a general principle of the present invention, according to an embodiment of the present invention.

An input video signal **100** is input into a detection and replacement system **102**. The input video signal **100** can be any type of signal, e.g., analog, digital, single channel, composite, etc. and may also include audio or other data. The detection and replacement system **102** receives the input video signal **100** and identifies advertisements (the process of identifying will be described below in more detail). When an

advertisement is identified, the advertisement can be replaced with a replacement advertisement.

The detection and replacement system **102** outputs an output video signal **104** which contains the modified video with the replacement advertisements. During a non-advertisement portion of the video then, the output video signal **104** should typically be the same as, or very similar to, the input video signal **100**.

In a first embodiment of the present invention, detection and replacement of advertisements is performed locally and automatically. Local detection is where detection of advertisements is performed by hardware in a same physical location or building as the output device or replacement device. Automatic detection is detection performed automatically by electronic equipment.

FIG. **2** is a block diagram representing a user relationship, according to an embodiment of the present invention.

FIG. **2** illustrates a user relationship in which a broadcaster **200** transmits programming from a broadcaster uplink facility **202** through a satellite **204**. Signals transmitted by the broadcaster **200** can be received by a plurality of locations, including a pub **206** run by pub owner **208** or a hotel **210** operated by hotel operator **212**. Although two types of commercial establishments are illustrated, the invention is not limited to those commercial establishments nor is it limited only to commercial establishments. The invention can also be deployed for use in a residential environment.

Although transmission of processing has been illustrated in FIG. **2** by way of satellite **204**, other systems of transmission can be utilized including but not limited to cable transmission, digital subscriber line (DSL) transmission, over-the-air broadcasts, and other wireless or wired means of transmission.

Referring again to FIG. **2**, advertiser **214** has a number of advertisements stored on advertiser databases **216**. Advertiser **214** may be a manufacturer, advertising agency, or any other entity or individual interested in advertising. Ad reseller **218** utilizes an ad reselling management unit **220** to take the advertisements from advertiser databases **216** and transmit them over network **222** to commercial establishments such as pub **206** or hotel **210**. In one embodiment advertiser reseller **218** works with advertiser **214** and the commercial establishments to sell the advertising opportunities created by the ad substitution process. Network **222** may comprise a private or public network such as the Internet, or may be another network infrastructure that provides connectivity between the various elements illustrated in FIG. **2**. In the embodiment illustrated in FIG. **2**, ads are transmitted from advertiser databases **216** to ad reselling management unit **220** over network **222**. In an alternate embodiment the ads are sent directly from advertiser databases **216** to ad reselling management unit **220** over a connection between the two units. As illustrated in FIG. **2**, connectivity can be provided between the content provider (e.g. Broadcast uplink facility **202**) and the network **222**. Such connectivity can be useful for the transmission of advertisements, commercial break intros/outros, or fingerprints of advertisements or commercial break intros/outros. The ad reseller **218** utilizing the ad reselling management unit **220** enables the substitution of ads to occur during the commercial breaks, thus providing new advertising to viewers in pub **206** or hotel **210**.

FIG. **3** is a time-frame diagram representing a programming stream with initial and substituted advertisements, according to an embodiment of the present invention.

Programming **300** progresses into a commercial break intro **302**. Commercial break intros are utilized in a number of countries to indicate to the viewers that the subsequent material being presented is not programming but rather sponsored advertising. These commercial break intros vary in nature but may include certain logos, characters, or other specific video and audio messages to indicate that the subsequent material is not programming but rather advertising. Subsequent to commercial break intro **302** a number of ads appear and as illustrated in FIG. **3** are presented as AD**1** **304**, AD**2** **306**, AD**3** **308**, and AD**4** **310**. The number of ads shown in FIG. **3** is merely illustrative, and any number of ads may in fact occur. The sequence of ads comprises commercial duration **340** and subsequently a return to programming **300**. The return to programming may in some instances be preceded by a commercial break outro **315** which is a short video segment that indicates the return to programming. Another commercial break intro **302** can subsequently appear, followed by more ads such as AD**5** **322**.

Referring to the lower half of FIG. **3**, it can be seen that a replacement commercial break intro **312** can be substituted followed by the substitution of advertisements including substituted ads AD**1'** **314**, AD**2'** **316**, AD**3'** **318**, AD**4'** **320**. This is followed by a return to programming **300** and can be followed by a replacement commercial break intro **312** and another ad such as AD**5'** **324**. In an alternate embodiment, there is no replacement commercial break intro **312** and the initial commercial break is used. In another embodiment the commercial break intro **302** is deleted entirely.

In an alternate embodiment substituted ads are not motion video but are instead still images. This embodiment has the advantage that a return to programming can occur after a time period that is not a multiple of 15 seconds (e.g., 30 seconds or 60 seconds), such that none of the original programming is lost.

In one embodiment the replacement commercial break intro **312** is explicit in describing that the advertising that follows is not part of the original programming. In some instances the particular establishment may take credit for the substituted advertising. In another embodiment a replacement commercial break outro **321** is utilized to indicate a return to original programming.

FIG. **4** is a block diagram representing a network of one embodiment of the system, according to an embodiment of the present invention.

The system can be deployed over a network in which advertiser databases **216** communicate, under the control of ad reselling management unit **220**, with ad insertion units **404**. The ad insertion units **404** receive programming signals from a satellite reception unit **402**. Ad insertion unit **404** displays that programming and advertisements included with the programming on monitor **406**. Monitor **406** is typically a television (CRT, plasma, projection, or any other type of television), although the monitor may be a computer, computer display, or other type of video terminal. Although the reception unit is shown in FIG. **4** to be a satellite reception unit **402**, the invention is not constrained to satellite reception but may receive signals from any number of sources as previously discussed.

Ad reselling management unit **220** is typically utilized with a satellite reception unit **402** and a monitor **406** to observe the original programming stream.

As will be discussed in greater detail, fingerprinting systems are used in one embodiment to detect the presence of a commercial break intro **302** at ad insertion unit **404**, and to initiate the substitution of advertisements.

In another embodiment remote monitoring units **408** are used in conjunction with a satellite reception unit **402** and monitor **406** such that an individual is viewing the programming and identifying the presence of commercial break intros

302. Upon seeing a commercial break intro **302** the individual presses a key or a button or other activation mechanism to send a signal through the network to ad reselling management unit **220** indicating that a commercial break intro **302** is taking place, and on what channel the commercial break is taking place. Ad reselling management unit **220** then can take a statistical average of the received indications of a commercial break intro **302** and can transmit that information to ad insertion units **404** causing ad substitution to take place. In this embodiment commercial break intro **302** and commercial break outro **315** are determined by voting and statistical measures, thus eliminating the need for automatic detection at the ad insertion unit **404**. The number of ad insertion units **404** and/or remote monitoring units **408** and associated equipment shown in FIG. **4** is merely illustrative, and any number of such devices may be in communication with the network.

Manual commercial break intro detection can be implemented as a simple office-based group of well trained and well paid viewers, or as a robust network of home-based, low-paid viewers in a scenario similar to that used by real-time closed-caption providers. In this embodiment, home-based viewers are equipped with networked remote monitoring units **408** that are equipped with hand-held remotes or other data entry device, used by these viewers to indicate when a commercial break commenced and concluded. These indications, along with the channel being viewed, would be collected and processed by the ad reselling management unit **220** (using a voting scheme to sort out the false or slow indications) and distributed to the ad insertion units **404**. Manual advertisement detection will be discussed below in more detail.

The distribution of the commercial break detection information and advertisement cue tones can be accomplished using either a public distribution network (the Internet, for example) or a private network of leased facilities. The choice of a public or private network is typically based on a cost/reliability trade-off analysis. The key parameters to be managed in the network distribution of detection data are latency and packet loss. The latency of a typical packet on the public Internet, within a country or continent, is virtually always well under one second. Packet loss, however, is not as predictable. Most core providers claim fairly low packet loss rates (well under 1%), but overall statistics show packet loss in the 1% to 5% range is not unusual. Because packet loss can be so high, some form of reliable (guaranteed) delivery must be used. The Transport Control Protocol (TCP) is the most common mechanism for guaranteed delivery used on the Internet, but involves the use of acknowledgements and retransmission of packet sequences. Alternative forms of reliable transport can be utilized to ensure both high reliability and low latency. The transport infrastructure need not be wired. Mobile wireless, or satellite radio frequency distribution mechanisms can be used for the transmission of commercial break information and cue tones.

FIG. **5** is a block diagram illustrating an ad reselling system, according to an embodiment of the present invention.

An ad reselling system **500** works with ad databases **502** which can be contained within the advertiser databases **216**. The ad reselling system **500** makes an ad request **506** and receives digital ads **504**. Programming source **540** transmits programming **542** to the ad reselling system **500** and in some cases may transmit cue tones/timestamps **524** which indicate the point of insertion for advertisements as well as the return to programming.

In some embodiments one or more remote monitoring units **408** are present and transmit signals including channel monitored **538** and detected break **536** to ad reselling system **500** such that the ad reselling system **500** can generate in its own cue tones/time stamps **524**.

In another embodiment a fingerprinting database **530** is used to store fingerprints of the ads **304-310** (or other replaceable segments) and commercial break intros **302**. The ad reselling system **500** generates a request prints signal **532** and receives ad and intro prints **534**. The ad and intro prints **534** provide material describing the ads and commercial break intros **302** such that the ad reselling system **500** can generate cue tones when a match is detected in the programming **542**. Fingerprints will be discussed below in more detail.

Ad insertion unit **404** receives cue tones/timestamps **524** which have been produced either through the program source **540** or by ad reselling system **500** in conjunction with signals from remote monitoring units **408**, or generates cue tones/timestamps locally through correlation of locally held intro and ad prints **534** with received programming **542**. Queue management signals **526** indicate which ads are to be substituted into the programming stream. New ads **522** are received by ad insertion unit **404** and are typically the 15, 30 or 60 second commercials that are to be substituted, although the invention is not limited to those particular durations of advertisements.

In an alternate embodiment, ad insertion unit **404** generates cue tones/timestamps **524** locally through the correlation of locally stored fingerprints of commercial break intros and ads with incoming frames of video, and in some cases of correlation of audio fingerprints with the audio stream. In one embodiment these fingerprints are generated locally at the ad insertion unit **404**, while in an alternate embodiment they are transmitted from ad reselling system **500** along with new ads **522**.

Ad reselling system **500** also interfaces with a traffic and billing system **514** such that traffic and billing system **514** receives an inserted ads report **516** and rates **518**, and can generate invoices **520**. Third parties can pay the operator of the ad reselling system **500** for using the third parties' advertisements as replacement advertisements.

In one embodiment the ad reselling system **500** interfaces with an electronic programming guide (EPG) **508** such that EPG request **512** is generated by ad reselling system **500**. EPG **508** presents a program guide **510** to ad reselling system **500**. This program guide **510** can be utilized by the ad reselling system **500** to determine the appropriate times for the insertion of advertisements as well as to determine the types of programming that are being presented at a particular time of day.

FIG. **6** is a block diagram illustrating an example of a local configuration of the present invention, according to an embodiment of the present invention.

A receiving dish **600** (or any other receiving apparatus such as a land line cable, etc.) receives a video signal. The video signal is transmitted to a set top box **602** (a tuner). The set top box **602** is tuned to a desired channel by an operator and outputs a channel output to a splitter **604**. The splitter **604** splits the channel output to a detection/replacement device **606** and a selector **608**.

The selector **608** receives a signal from the detection/replacement device **606** and the splitter **604**, and can select which signal to output to an output device **610**. The selector **608** can be controlled manually by an operator and/or can be under the control of other components of the system such as the detection/replacement unit **606** and/or the set top box **602**.

The detection/replacement device **606** automatically detects a presence of an advertisement (or other segment to be removed), and automatically replaces the advertisement with a replacement portion (typically a targeted advertisement).

The replacing is done by initiating a playback of the replacement portion (such as an MPEG playback), and controlling the selector **608** to select output from the detection/replacement device **606** as opposed selecting output from the splitter **604**. When the playback of the replacement segment(s) is over, and it is time to return to the content on the channel output, the detection/replacement device then controls the selector to switch back to output from the splitter **604**.

Note that the splitter **604** and selector **608** may all be contained inside the detection/replacement device **606** itself. Additionally, the splitter **604** and selector **608** can be used as a bypass circuit in case of an operations issue or problem. For example, in case of any problem with the detection/replacement device **606** or operation, in this embodiment or any others described herein, the selector **608** can automatically select the output from the splitter **604**. In this manner, a signal is never lost, and at worst, the output device **610** will display video content with the original advertisements intact. An operations issue might be failure of hardware, failure to receive trigger signals or any other reason the system may not be operating as intended.

Note that in FIG. **6** all cables/signals can also include separate audio cables/signals in addition to video cables/signals.

The automatic detection of advertisements, and other segments, can be performed using numerous techniques known in the art, see R. Lienhart, C. Kuhmunch and W. Effelsberg, "On the detection and recognition of television commercials," Proc. IEEE Int. Conf. Multimedia Computing and Syst. (1997), which is incorporated by reference herein. Such techniques include detection of black frames, detection of scene changes, or detection of particular aspects of the image. Such aspects can include color histograms and color coherence vectors.

Comparison of entire frames of video sequences can be computationally intensive. It is more efficient, and in some cases more effective, to reduce the data before storage and comparison. The reduced set of data for a video segment is sometimes called a fingerprint.

Fingerprints of each commercial can be created by calculating important features for each frame and then representing the spot's fingerprint as a sequence of these features. Fingerprint matching should tolerate small differences between two fingerprints calculated from the same spot, but broadcasted at different times or via different paths. Matches should be computationally inexpensive and should show strong discriminative power.

A best mode of fingerprint data is the color coherence vector (CCV). CCVs are fast to calculate, show strong discriminative power and tolerate slight color inaccuracies. The generation of CCV fingerprints to describe video content is described in "On the Detection and Recognition of Television Commercials" article mentioned previously.

The color coherence vector (CCV) is related to the color histogram, but instead of counting only the number of pixels of a certain color, it differentiates between pixels of the same color depending on the size of the color region they belong to. If the region is larger than a specified size, a pixel is regarded as coherent. Otherwise, it is regarded as incoherent. One possible region size is 25 pixels.

Thus, there are two values associated with each possible color: the number of coherent pixels of that color and the number of incoherent pixels of that color. A color coherence vector then is defined as a vector of these values. The size of the vector can be reduced by reducing the number of colors. One method for color reduction is the use of only the two highest order bits of each color plane. Further data reduction can be achieved by scaling the image before calculating the CCV, for example, to 240×160 pixels. Smoothing with a Gaussian filter can also improve matching performance.

Video segments can be detected by matching their fingerprints to fingerprints stored in a database. The representation of the value of a feature can be called a character, the domain of possible values an alphabet, and the sequence of characters a string. Given a query string A of length P and a longer subject string B of length N, the approximate substring matching finds the substring of B that aligns with A with minimal substitutions, deletions and insertions of characters. The minimal number of substitutions, deletions and insertions transforming A into B is called the minimal distance D between A and B.

Two fingerprint sequences A and B are regarded as a match if the minimal distance D between query string A and subject string B does not exceed a distance threshold and the difference in length does not exceed a length difference threshold. Approximate substring matching allows detection of commercials that have been slightly shortened or lengthened, or whose color characteristics have been affected by different modes or quality of transmission. One possible substring matching algorithm is that proposed in "Pattern Matching in a Digitized Image," G. M. Landau and U. Vishkin, Algorithmica 12(4/5) 375-408, October 1994.

A sliding window of length L seconds runs over the video, calculating the CCV fingerprint of the window. At each position the window fingerprint is compared with the first L+S seconds of each fingerprint stored in the database. If two are similar, the window is temporally expanded to the whole length of the candidate fingerprint in the database and the two are compared. If a video segment is recognized, the window jumps to the end of that commercial, otherwise it only shifts forward to the next shot boundary. The subject string is initially set to length L+S to avoid an increase of the approximate distance by frames dropped at the start of the commercial, which might occur in practice. S should be set as low as possible, with 2 seconds being a possible value.

One application of video segment detection is the detection of advertising blocks for replacement. The system operator can create a database of advertisements.

In some European and Asian countries, commercial blocks are bounded by "outro" and "intro" video segments. These segments announce to the viewer that a commercial segment is beginning or ending, and generally contain some indication of the identity of the broadcaster or program provider. When such segments are dependably available, specific detection of every commercial may not be necessary. The system can switch to alternate content when an "outro" is detected and back to programming when an "intro" is detected.

Color coherence vectors have the advantage that they capture spatial information on which to base a decision regarding the presence of a particular segment. That decision can be made based on a comparison of the color coherence vectors for the incoming image vs. the color coherence vectors stored in the fingerprints of known segments for detection.

Calculation of the color coherence vectors is described in the article entitled "Comparing Images Using Color Coherence Vectors," by Greg Pass, Ramin Zabih, and Justin Miller, In Proceedings of ACM Multimedia 96, pages 65-73, Boston, Mass. USA, 1996, which is incorporated by reference herein. The color coherence vectors can be calculated and compared for 25 (or any number) of frames of incoming video to determine if those color coherence vectors match the stored fingerprints containing color coherence vectors of stored segments. If a match is detected, the comparison can be expanded in time to insure a lower probability of error.

In order to facilitate automatic detection using fingerprint data, it is desirable that a current library of fingerprint data for advertisements (or other segments) be accessible by the detection/replacement device **606**. In a further embodiment of the present invention, a local fingerprint database can be maintained with periodic (or instantaneous) updates from a remote fingerprint server.

FIG. **7** is a block diagram illustrating an example of an ad insertion unit, according to an embodiment of the present invention.

FIG. **7** illustrates an ad insertion unit **404** and includes a video A/D converter **702**, and audio A/D converter **704**, both interfacing to a commercial detection function **718**, an ad management function **722**, an ad download interface **720**, a network interface **716** and a central commercial detection interface **714**. The system also includes delay element **706** and an ad insertion function **708**. Delay element **706** is required in some embodiments to enable the proper detection and substitution of commercial messages. This delay, if required, is typically in the range of 2 to 60 seconds, although some embodiments will allow for the use of minimal delay on the order of milliseconds. The ad insertion function **708** is connected to the commercial detection function **718**, the ad management function **722** and an ad storage device **724**. In one embodiment the ad insertion function **708** is a digital ad insertion unit that causes splicing to occur as per industry standards for digital video streams. In this embodiment the commercial detection function **718** is accomplished using one or more fingerprint recognition methods implemented in software running on a microprocessor or specialized circuit. Ad management function **722** can be accomplished using a microprocessor, and the ad storage device **724** can be a hard drive. Alternate embodiments using different types of hardware or hardware in conjunction with software are possible.

In one embodiment ad insertion unit **404** operates in live mode, with the delay being relatively unnoticeable to the viewer. In an alternate embodiment, ad insertion unit **404** operates in playback mode in which case the programming is being played back with a time shift ranging from tens of minutes to weeks or even months and years. In yet another embodiment the delay is on the order of a few seconds to a few minutes, thus allowing more time for the detection of the commercial break intro **302**, the advertisements, or the return to programming. Playback mode can be utilized as part of a Video on Demand system, and when implemented in a hospital or hotel will allow the generation of significant revenue from the targeting of advertisements. More on the time delay will be discussed below in more detail.

Ad storage device **724** can be based on semiconductor memory (e.g. DRAM or Flash) or hard disk drive used for the storage of ads for substitution. In an alternate embodiment optical storage is utilized for ad storage device **724**. The ad audio and video is stored in compressed format (MPEG-2, for example) to allow tens to hundreds of ads to be stored in a very modest sized memory or disk drive (60 Mbytes to 10 Gbytes). Ad insertion function **708** also interfaces to a video D/A **710** and audio D/A **712**.

The ad insertion function **708** prepares a stored ad (from the ad storage device **724**) for insertion by decompressing it, and inserts it into the program on cues provided by the commercial detection function **718**. The ad management function **722** keeps track of all of the ads stored in ad storage device **724** and selects appropriate ads when requested by the commercial detection function **718**. The ad management function **722** keeps an internal database of which ads are stored on ad storage device **724** and when and how they should be inserted (the ad insertion schedule). The ad management function **722** also keeps track of which ads were actually played and communicates with the traffic and billing **514**. Ad management function **722** also insures that all of the necessary advertisements are on ad storage device **724**, and can request additional advertisements as required.

Network interface **716** provides a single point of connection between the ad insertion unit **404** and a public or private (leased) distribution network. The network is used to download ads, correspond with a traffic and billing system, and communicate commercial break information (if required).

Ad download interface **720** provides the functionality necessary to download ads and store them on ad storage device **724**. Ad download interface **724** communicates with ad management function **722** to update the ad management function's ad database.

Central commercial detection interface **714** receives messages from a central location where commercials are manually or automatically detected and messages sent to all ad insertion units. In an alternate embodiment, commercial detection function **718** is in a central location and a signal sent to all boxes indicating the timing of commercial breaks.

In operation and as can be seen from FIG. **7**, video and audio is received by the ad insertion unit **404** and commercial break intros **302** are detected in the commercial detection function **718**. Once the commercial intros are detected, the ad management function **722** retrieves an ad from ad storage device **724** and causes it to be inserted in ad insertion fuinction **708**. Delay **706** is present such that additional time can be given to the commercial detection process taking place in commercial detection function **718** such that the commercial break intro **302** can be appropriately identified. Upon completion of the commercials, according to the predicted or known commercial duration **342** ad insertion operation **708** ceases to insert ads and returns to the original programming received at the video and audio output but including the delay **706**. Video and Audio D/A converters **710** and **712** respectively recreate the analog signals that are expected at the back of most television viewing devices. Although in one embodiment analog signals are utilized, the system can be used in a purely digital environment with digital signals being received and transmitted directly to the viewing device. In another embodiment, digital signals are received and analog signals are presented to the television or viewing device. One advantage of this embodiment is that the ad insertion unit **708** can also act as a receiver for digital signals. This embodiment is particularly useful for the viewing of digital over-the-air transmissions on traditional analog televisions.

Controller **700** acts to coordinate the operations of the various units of the ad insertion unit **404**, and can be based on a traditional micro controller or personal computer as illustrated in FIG. **8**.

FIG. **8** is a block diagram illustrating a computer implementing an ad reselling system, according to an embodiment of the present invention.

FIG. **8** represents a computer on which specific embodiments of the invention can be implemented to create ad insertion unit **404**, remote monitoring unit **408**, or ad reselling unit management unit **220**. A system bus **820** transports data among the CPU **812**, the RAM **808**, Read Only Memory-Basic Input Output System (ROM-BIOS) **824** and other components. The CPU **812** accesses a hard drive **800** through a disk controller **804**. The standard input/output devices are connected to the system bus **820** through the I/O controller **816**. A keyboard is attached to the I/O controller **816** through a keyboard port **836** and the monitor is connected through a monitor port **840**. The serial port device uses a serial port **844** to communicate with the I/O controller **816**. Industry Stan-

dard Architecture (ISA) expansion slots **832** and Peripheral Component Interconnect (PCI) expansion slots **826** allow additional cards to be placed into the computer. In an embodiment, a network card is available to interface a local area, wide area, or other network.

FIG. **9** is a block diagram illustrating an example of a fingerprint data maintenance apparatus, according to an embodiment of the present invention.

A detection/replacement device **900** is connected to a fingerprint storage **902**. The fingerprint storage **902** is a storage device that stores any kind of fingerprint data relevant to the detection of advertisements, or other segments, as known in the art and is accessed by the detection/replacement device **900** when performing the detection of segments.

A control unit **904** is used to maintain the fingerprint storage **902**. The control unit **904** interfaces with a modem **906** which is connected to a computer communications network **908** such as the Internet. The control unit **904** controls downloads of fingerprint data via the modem **906** and stores the data on the fingerprint storage **902**. The control unit **904**, as well as the fingerprint storage **902** and the modem **906**, may physically exist as part of the detection/replacement device **900** or may exist as a separate component. A remote fingerprint server **910** transmits fingerprint data through the computer communications network **908** to the control unit **904**, via the modem **906**, which then gets stored in the fingerprint storage **902**.

Fingerprint data can be transmitted upon request by the control unit **904**, and/or additional fingerprint data can be transmitted automatically and periodically to the control unit **904**. Additional fingerprint data can be instantly transmitted to the control unit **904** when it is available by the fingerprint server **910**, or new fingerprints can be transmitted periodically (e.g., every week). The control unit **904** can be configured to receive fingerprint data from the fingerprint server **910** without requesting fingerprint data, for example by receiving the fingerprint data via email (or similar system) with automatic processing.

Using the previously described configurations, the detection/replacement device **900** has access to a current library of fingerprint data. The fingerprint server **910** would ideally store fingerprint data for all known advertisements, or other desired segments. When a new advertisement is known, the fingerprint server **910** can run, or use another apparatus to run, an analysis on the advertisement to calculate fingerprint data for that advertisement, and then store the new fingerprint data on the server **910**. The new data can immediately be transmitted to recipients and their respective fingerprint storage **902**, or can be saved for later transmission. The recipients can pay for the privilege of receiving current fingerprint data or the service can be provided for free or part of a package for use with the detection/replacement system.

FIG. **10** is a block diagram illustrating a fingerprint database creation system, according to an embodiment of the present invention.

FIG. **10** describes a fingerprinting apparatus/process in which either commercial break intros **302** and/or ads such as **304** & **306** are digitized and a number of frames **1002** are received by a feature extraction and processing block **1000**. This feature extraction and processing block **1000** performs a number of image processing operations to generate image and audio related elements **1004** such that a fingerprint can be generated by the fingerprint generation block, **1006**. This fingerprint is a unique representation of a frame or set of frames, and can be used to identify a particular point in a video and audio stream. In one embodiment a fingerprint is comprised of important features of a frame.

An example of a simple feature that can be used as a fingerprint is the color coherence vector (CCV). The color coherence vector looks for areas in the frame having the same color. Other features of a frame can be used to create a fingerprint and include, but are not limited to, text and object recognition, logo or other graphic overlay recognition, and unique spatial frequencies or patterns of spatial frequencies. Fingerprints can also be created from multiple frames such that they include unique temporal characteristics instead of, or in addition to, the unique spatial characteristics. Temporal characteristics that can be used to create fingerprints can include hard cuts and hard cut frequency, fades, action, edge change ratio, and motion vector length. Other features of the commercial break intro **302** or advertisements (or other segments) can be used to form fingerprints including audio patterns and closed-caption text.

Although the generation of fingerprints has been described with respect to the commercial break intro **302**, fingerprints can be generated for the advertisements themselves or for segments of the programming. The concept of fingerprinting is well known to those skilled in the art. Fingerprints are then stored in fingerprint database **530**, and can be accessed to allow for comparison of the stored fingerprint with incoming frames of video.

A number of fingerprint generation techniques can be utilized such that appropriate information is extracted from the commercial break intro **302** or ad allowing recognition of that commercial break intro **302** or ad upon subsequent reception. In one embodiment, the recorded fingerprints do not contain sufficient information to recreate a copy of frames **1002** and thus it is impossible to reconstruct the commercial break intro **302** from the fingerprint. This effectively avoids copyright issues since the information stored can be used to recognize, but not reconstruct, the original copyrighted work.

As an alternative to fingerprints the detection of commercial break intro **302** can be performed by looking for features (directly or indirectly measurable) associated with the commercial break intro **302** or advertisements. These features can include, but are not limited to, black frames, changes in audio levels, frequency of hard cuts, fades, edge change ratio, motion vector length, and the presence of logos. In this embodiment no fingerprints are stored, but occurrence of the commercial break intro **302** is detected directly through identification of one or more features associated with the commercial break intro **302** or the advertisement.

FIG. **11** is a block diagram illustrating a use of fingerprints in a correlation algorithm to generate cue tones or time stamps, according to an embodiment of the present invention.

FIG. **11** illustrates a correlation process in which fingerprints **1120** are correlated with incoming frames **1102** in a correlation unit **1122** to generate cue tones/timestamps **524** (also known as a trigger signal) if a match is found. These cue tones/timestamps **524** are utilized by ad insertion unit **404** to commence the insertion of new advertising. The cue tones/timestamps **524** may include the current time, relevant channel, length of break, or any other information related to the detection.

The fingerprint generation and correlation apparatuses/processes illustrated in FIGS. **10** and **11** can be performed locally as well as at a central location, or can be distributed. In a distributed environment, fingerprint generation can take place centrally and the fingerprints distributed to the ad insertion unit **404**, with correlation taking place at the ad insertion unit **404**.

FIG. **12** is a time frame diagram representing a measurement of predicted duration of commercials, according to an embodiment of the present invention.

FIG. **12** illustrates the determination of the predicted duration **1210** from the programming **300** and original advertisements having a time span indicated as commercial duration **340**. As can be seen in FIG. **12**, a predicted duration **1210** is determined based on a number of statistical measures including measurements of the average number of advertisements presented during that type of programming, during that time of day, on that particular network or as measured through the use of remote monitoring units **408**. These statistical measures can be applied to individual advertisements as well as to the entire commercial duration **340**.

A database or other storage can store statistical measures and respective data, e. g., average length of break, average length of commercial, etc. So for example, data for Saturday at 4 pm can be stored which designated the average number of commercials is 3, or the average commercial length is 30 seconds, or the average length of an entire commercial break is one minute, etc. This data can be used for the predicting. Different statistical measures can be used and weighted according to predetermined weights.

Predicted duration **1210** can be used to determine the number of advertisements that should be substituted and thus determine the predicted commercial duration **342**. In some instances the predicted commercial duration **342** will not match the commercial duration **340** exactly and one too few or one too many advertisements may be inserted into the stream. This is not critical to the invention, as failure to substitute a new advertisement will simply result in the transmission of the original advertisement. Alternatively, if an additional advertisement is inserted, some of the initial programming will be overridden but only for a period typically lasting 15 to 30 seconds. Because in general it is not desirable to overwrite the programming, the system can be designed such that predicted duration **1210** tends to err on the side of too few overridden commercials rather than too many. In an alternate embodiment, predicted duration **1210** is made based purely on a statistical measures and will in some cases, err in inserting too many commercials. In another embodiment, slides or still images are used for the advertising towards the end of the ad schedule so as to permit small durations (e.g., several seconds) of advertising between the end of a traditional 15, 30, or 60 second commercial and the return to programming. In some embodiments, the commercial duration **340** is known exactly and the substituted commercials fit in the commercial duration **340**. In this embodiment, predicted commercial duration **342** is replaced by commercial duration **340**.

In a further embodiment of the present invention, which can be used in combination with any of the other embodiments described herein, the substitute advertisements, or any other replacement segments, can be selected, maintained, and configured locally. For example, a local operator can choose advertisements to be used as replacements and he or she can even film or create their own custom advertisements. The advertisements can also be configured, such as specifying an order that they are used.

FIG. **13** is a block diagram illustrating a system for maintaining local replacement segments, according to an embodiment of the present invention.

Detection/replacement apparatus **1300** is the apparatus described herein used for detection (the type of detection does not matter, e.g., automatic, manual, local, remote, etc.) The additional components described herein and their connections to the detection/replacement apparatus **1300** are not illustrated for simplicity.

The detection/replacement apparatus **1300** is connected to a local advertisement storage **1302**, which corresponds to ad storage device **724**. The local advertisement storage **1302** stores replacement advertisements and can comprise any kind of computer storage such as CD-ROM, DVD, flash memory, hard disk drive, etc.

An advertisement selection interface **1304** is a typically an optional software module running on a hardware device (either contained in the detection/replacement device **1300** or on a separate physical entity) that allows a local operator to select advertisements and configure them for use by the detection/replacement device as replacements.

The advertisement selection interface **1304** can interface with a modem **130** which allows an operator to browse and/or download advertisements from a server using a computer communications network. This can be the same modem used by the detection/replacement apparatus or a separate one. The server can have advertisements for purchase or for free that an operator may download, for example advertisements for beer (either beer in general or a particular brand), etc. The advertisement selection interface **1304** also interfaces with a media storage drive **1308** (such as a DVD drive, etc.) so that the operator can load in a DVD (or any other media) with advertisements the operator wishes to transfer to the local advertisement storage **1302**.

The advertisement selection interface **1304** may use a graphical user interface (GUI) to allow the operator to easily download and/or select advertisements from the local advertisement storage **1302** so that the operator can decide which advertisements he wishes to transfer to the local advertisement storage **1302** for later use as replacement portions. The operator can also select the order in which the selected replacement portions will be displayed.

The local advertisement storage **1302** may optionally also store a length of each stored advertisement. This is so the detection/replacement device can utilize an advertisement of an appropriate length. For example, if a commercial break is known, predicted, or estimated to be 30 seconds, then a 30 second replacement portion may be used from the local advertisement storage **1302**.

An advantage of using the configuration illustrated in FIG. **13** is that the operator of the equipment has the ability to easily tailor the advertising to his or her wishes. For example, if the detection/replacement device described herein is utilized in a pub, then the operator may wish to choose advertisements that are targeted directly to the publicans (for example, a type of beer or food). The operator should typically benefit from showing advertisements for products or services that the publicans can purchase and receive immediately. As another example, if the detection/replacement device described herein is used in a hospital (or airport, etc.), then the hospital may wish to advertise products or services that the hospital offers. Operators of the equipment would benefit from using advertisements for products they sell and services they offer.

Custom advertisements can also be made and transferred to the local advertisement storage **1302**. Advertisements may even be as simple as a single video frame portraying a product. In this still frame embodiment, choosing an advertisement with a length which matches an estimated length of the commercial break is not required, and there is no concern that a replacement portion may be cut off prematurely when non-advertising programming returns to the channel being watched.

The automated detection embodiments described herein have the advantage that they require no human intervention. However, such methods may not be entirely foolproof and for a variety of reasons it is possible a segment desired for replacement may go undetected automatically. Thus, in alter-

nate embodiments of the present invention, the manual detection mentioned previously is used to detect segments such as advertisements (in place or in conjunction with automated detection). Manual detection is where a human operator(s) is (are) used to detect segments (e.g., advertisements).

In one embodiment of the present invention, a local manual detection (as opposed to local automated detection) can be used to detect advertisements. For example, a local employee such as a bartender can watch an output device, and when he or she sees an advertisement (or other desired segment to be removed), the bartender can flip a switch (replacing the automatic detection described above), triggering output of a replacement segment. The bartender can watch another output device displaying the original video signal to determine when the advertisement is over, and then flip the switch back to return the original signal to the public output device.

In a further embodiment of the present invention, manual detection can be performed remotely and transmitted to the detection/replacement device. Remote manual detection is preferred to the local manual detection described above as no local human operator is needed to effectuate the remote embodiment.

FIG. **14** is a block diagram illustrating an example of a remote manual triggering configuration, according to an embodiment of the present invention.

A receiving dish **1400**, a set top box **1402**, a splitter **1404**, a selector **1408**, and an output device **1410** all operate similar to their counterparts as described in the corresponding description to FIG. **6**. As discussed previously, the splitter **1404** and the selector **1408** can exist as components inside a detection/replacement device **1406**, and/or these components can also exist separately as well, which can also serve as an emergency bypass switch.

The detection/replacement device **1406** in this embodiment is connected to a modem **1412** which is connected to a computer communications network. A computer communications network is a network for transmitting digital packets across nodes, such as the Internet **1414**. The signal connected to the detection/replacement device **1406** is typically (although not necessarily) connected to a different signal than the video signal itself.

The detection/replacement device **1406** receives a trigger signal from the modem **1412** via the Internet **1414**. The trigger signal tells the detection/replacement device **1406** information regarding a presence of detected segments which may be replaced by the detection/replacement device. Thus, instead of the automatic detection as described with regard to FIG. **2**, the trigger signal can initiate a replacement operation, but otherwise the operation of the remaining components in FIG. **14** are typically the same as their counterparts in FIG. **6**.

The trigger signal in a manual detection embodiment is generated by using human intelligence in detecting segments such as advertisements. Typically, a human watches a broadcast, and when he or she sees an advertisement, a switch (or key) is pressed. When the advertisement(s) is/are over, the same (or different) switch (or key) is pressed. In this manner, a foolproof way of detecting advertisements can be achieved.

A receiving dish **1416** (or any other receiving method such as a cable) receives a video signal. The video signal is (optionally) split and transmitted to tuner A **1418**, tuner B **1420**, tuner C **1422**, and tuner D **1424**, which in turn is output on TV A **1426**, TV B **1428**, TV C **1430**, and TV D **1432**, respectively. Of course, instead of one signal source (receiving dish **1416**), different sources can be used for each tuner. Monitoring workstation A **1434** and monitoring workstation B **1436** are operated by human operators watching their assigned respective TVs.

For example, an operator manning monitoring workstation A **1434** may be assigned to watch TV A **1426** and TV B **1428** (or just assigned a single TV), and indicate the presence of advertisements on his or her laptop (or other computer) by pressing relevant keys.

When an operator indicates on his or her respective computer the presence of an advertisement, a trigger signal is transmitted to a hub **1438**. The hub **1438** is connected to a modem **1440** which transmits the trigger signal to a computer communications network such as the Internet **1414**.

The trigger signal described above can be transmitted via the Internet **1414** to a network monitoring workstation **1442** and/or network monitoring server **1444**. The network monitoring workstation **1442** receives the signals described above, processes them, and can store them in the network monitoring server **1444**. The network monitoring workstation **1442** receives the trigger signals and transmits the trigger signals via the Internet **1414**, or other computer communications network, to the detection/replacement device of recipients, such as detection/replacement device **1406** via modem **1412**. A list of recipients, with their IP or other address information, can be maintained on the network monitoring server **1444**.

The trigger signal transmitted to recipients can be in the form of a digital record or packet. The record may contain information regarding the presence of an advertisement, a length or estimated length, if known, of the advertisement, a channel which the record was detected on, a time, a type, and/or any other relevant information. A unique ID may be given to each advertisement triggered for identification and/or synchronization purposes. The type may comprise an advertisement, intro/outro, newscast, or any other category a segment can fall into.

Tables I and II below provides examples of possible records which could comprise a trigger signal.

TABLE I

Status:	Ad start
Type:	Advertisement
ID:	45233
Channel:	3 (or alternatively a network identifier such as CNN)
Time:	21:04:03
Estimated length:	Unknown

TABLE II

Status:	Ad over
Type:	Advertisement
ID:	45233
Channel:	3
Time:	21:04:33
Estimated length:	30

The format used in Tables I and II is just for exemplary purposes, and the field identifiers (such as "channel," etc.) may not really exist in the packet but are provided for ease of understanding. Additional fields may be present or some fields may be optional and not used. Not illustrated in Tables I and II are any other data known in the art needed to transmit data across a computer communications network, such as headers, IP addresses, etc.

The network monitoring workstation **1442** and server **1444** can also optionally monitor the status of the recipients. The status can comprise any combination of the following: a monitoring status (such as "OK", "offline", "disabled"), a channel a recipient is tuned to, a mode (e.g., programming or ad insertion), or any other characteristic of the recipient's equipment. The status can be ascertained by receiving update

signals from the recipients over the Internet **1414** (or other computer communications network).

The trigger signal transmitted from the monitoring workstation(s) **1434**, **1436** to the network monitoring station **1442** may take a different form from the final trigger signal transmitted from the network monitoring station **1442** to the recipient(s) **1406**, or it may be the same form. It is also possible that the monitoring workstation(s) **1434**, **1436** and the network monitoring station **1442** may be at the same location, thereby obviating the need for using the Internet (or other network) to transmit between the two stations. The network monitoring station **1442** may also be optional, and the trigger signal can also be transmitted directly to recipient (s) **1406** from the monitoring workstation(s) **1434**, **1436**. In this latter embodiment, a network monitoring station **1442** may still be used to monitor the status of a plurality of channels. With such monitoring, an operator can view an indicator of the plurality of the channels and their status (e.g., programming, advertising, intro, outro, etc.).

Any detection/replacement device **1406** configured for use with this embodiment can receive trigger signals from the Internet **1414**, decode the trigger signals, determine if each trigger signal received applies to an output currently being viewed, and if so, take appropriate action.

The channel included in the trigger signal record is important because trigger signals may be transmitted spanning many channels. The detection/replacement device **1406** should typically know which channel the set top box **1402** is tuned to so that the detection/replacement device **1406** will act only on trigger signals affecting a currently tuned channel.

The detection/replacement device **1406** can detect the currently tuned channel in a number of ways. A signal can be transmitted from the set top box **1402** (or other video source) directly to the detection/replacement device **1406** so that the detection/replacement device **1406** knows the currently tuned channel. Alternatively, an operator may program the detection/replacement device **1406** with the currently tuned channel, for example by entering this channel directly into the detection/replacement device **1406**. In yet another embodiment, the detection/replacement device **1406** may be combined with the set top box **1402**, thus no redundant programming of the channel is necessary.

In an alternative to the previous methods of channel detection in which the detection/replacement device is "told" the current channel, the currently tuned channel may be automatically detected. Automatic channel detection can be performed by the detection/replacement device **1406** using vertical blanking interval (VBI) data and/or fingerprint data. The monitoring workstation **1442** (or other component in the system) can monitor and generate channel identity data. Channel identity data is data used to identify a channel and can compnrse VBI data, fingerprint data, such as color coherence vectors, etc., or any other characteristic of video or audio on a particular channel. The channel identity data can optionally be compressed or hashed and transmitted (via any computer communications or other network) to recipients along with its respective channel. Time information should also be transmitted with the other data as well so that the recipients can identify corresponding frame(s) to try and match signal data to. Recipients may need to store previous video signal data in a buffer to account for a delay in receiving channel identity data over the computer communications network. Recipients can then analyze the video on the currently tuned channel (or in the buffer) and compare it to the received channel identity data (of course the same analysis method should be used). If there is a match, the recipient has determined which channel the video signal is tuned to. The automatic detection of a current channel is not necessary if one of the other methods of identifying a current channel described in the previous paragraph is available.

FIG. **15** is a flowchart illustrating a method of using remote manual triggering to identify advertisements, according to an embodiment of the present invention.

The method begins with operation **1500**, which manually indicates a presence of an advertisement. This is typically performed at a monitoring workstation by a human pressing a button or key upon viewing an advertisement.

From operation **1500**, the method proceeds to operation **1502**, which transmits the presence of an advertisement to a central server. This is also performed by the monitoring workstation.

From operation **1502**, the method proceeds to operation **1504** which receives the trigger signal from a monitoring workstation and transmits the trigger signal to recipients. This operation is typically performed by the network monitoring station.

From operation, the method proceeds to operation **1506**, which receives the trigger signal by the recipients over the computer communications network. The trigger signal is received and decoded as known in the art to obtain relevant field values.

From operation **1506**, the method proceeds to operation **1508** which checks if the currently tuned channel matches a channel referred to in the trigger signal. This operation can also match other information such as a time indicated in the trigger signal (if the trigger signal is too old, it should not be acted upon). If the check in operation **1508** determines that there is not a match, then the method proceeds to operation **1510** which ignores the trigger signal.

If the check in operation **1508** determines that there is a match, then the method proceeds to operation **1512** which checks the status of the trigger signal. If the status of the trigger signal is "Ad Start" (or other indicator that an advertisement or other segment is beginning), then the method proceeds to operation **1514** which beings the replacement process as described herein.

If the status of the trigger signal is "Ad Over", then the method proceeds to operation **1516** which ends the replacement process as described herein.

Other scenarios not illustrated in FIG. **15** may occur and should be handled accordingly. For example, if a channel is changed during a currently replaced commercial, then typically the generating of the replacement portion should be terminated and the new channel should be output without replacement. If a new channel changed to is in the middle of an advertisement, this can be handled at least one of two ways: if trigger signals for other channels are temporarily saved by the recipient, the recipient apparatus could then know that a newly tuned channel contains an ad and thus a replacement segment may be initiated (if time permits); or the advertisement on the newly tuned channel can just be displayed normally and the trigger signal indicating the end of the current advertisement would not be acted upon.

Typically, the recipients (or subscribers) to the trigger signals are constantly monitoring for and receiving trigger signals from the network. Upon receipt of a trigger signal, the method in FIG. **15** is initiated.

It is also noted that in any of the embodiments described herein, an optional time delay may exist between when a frame is broadcast universally and when that frame is actually displayed using any of the configurations described herein. The reason for the time delay is that when performing a manual detection, a slight delay is experienced before a human identifies an advertisement (or other segment) in a

broadcast. A delay may also exist using automated detection as well while frames are analyzed and matched. In addition, there may be a delay in receiving signals across the computer communications network. Thus, it is desirable to maintain a slight delay (e.g., 5 seconds) between the current output of video (whether a replacement segment is being output or not) and the original signal so that there will be no change to the non-advertising content. This will offset any delay in detecting segments and the delay should typically be unknown to viewers. A temporary storage (such as flash memory, RAM, or a hard drive) can be used to store the buffer of video and audio data during the delay period, and video/audio output is actually generated from this buffer. This memory buffer may exist inside the detection/replacement device.

A combination of manual and automatic detection can also be used in case one fails. For example, a detection/replacement device can be configured for automatic detection, but if there is a failure of the auto detect system, then manual detection can be used (either locally or remotely). Alternatively, manual detection can be the default and automatic detection can be used as a back. In a further embodiment, both types of detection can be used at the same time. For example, if either an automatic detection or a manual detection indicates a presence of an advertisement, then the system can process the advertisement accordingly. Alternatively, one method (manual or automatic/local or remote) can take precedence over another.

In yet a further embodiment, a "peer to peer" detection system may be used. If one establishment using a detection/replacement system detects an advertisement (manually or automatically or both), the establishment can share this information with other establishments on the computer communications network by sending a trigger signal to other interested establishments (it may contain a list of other establishments locally or request such a list from monitoring workstation). This might be the case when establishments such as pubs are affiliated with one another and trust another's detections. The trigger signal should ideally contain the location of origin of the signal and the manner by which an advertisement was detected. Such a trigger signal can also be addressed to the monitoring workstation, which can then re-transmit the trigger signal to known recipients, preferably with an indication of the origin of the signal in the record. Establishments may configure their systems not to act upon ("trust") detections from other establishments.

In yet another embodiment of the present invention, individual channels in a composite video signal comprising numerous channels can be simultaneously processed with their advertisements (or other detected segments) replaced with replacements. Thus, an input signal comprising numerous channels can be input into a system and an output can comprise a composite signal with the programming on each of the individual channels but with replacements therein. This embodiment can be especially useful for enterprises like hotels and/or hospitals, which may desire to target advertisements to individual patrons who receive a composite signal and can tune to whichever channel the patron wishes. This embodiment can also be used in combination with any other embodiment or configuration described herein.

FIG. **16** is a screen shot illustrating one example of user interfaces, according to an embodiment of the present invention.

A channel monitor window **1600** is used by a human monitor to indicate when commercial starts. A channel indicator **1602** is used to select/indicate a channel being monitored. Start ad break buttons **1604** are used by the operator to indicate a beginning of an advertisement. For example, upon a beginning of an advertisement the operator can push a button indicating that the operator believes the ad break will last 10 seconds. Additional "extend ad break buttons" could be used by the operator to indicate that the current ad will last longer than indicated by using the start ad break buttons **1604**. Stop ad break buttons **1608** are used to indicate when an ad is going to end (either immediately or in a predetermined time interval). A "time remaining bar" could indicate how much time is remaining in the current ad break according to the inputs by the operator. Alternatively, a simple ad start/ad stop button (same or two different buttons) can be used.

A network status window **1612** is used by a network monitoring station to monitor status of recipients (e.g., pubs, hospitals, etc.) An address column **1614** indicates each respective recipient being monitored. A status column **1616** indicates the status of each respective node (e.g., a currently tuned channel). A channel column **1618** indicates a channel a respective node is tuned to. A advertisement column **1620** indicates a mode the recipient equipment is in (e.g., inserting an ad or watching a program) and may also indicate the particular advertisement being played. A "last status column" could indicate a last time a status update was received by that node.

A recipient status window **1624** is used by a recipient to monitor a current status of the system. A channel indicator **1622** indicates a currently tuned channel. This indicated channel can either be automatically detected, or an operator can use the channel indicator **1622** to identify a channel currently being viewed. For example, a drop down menu can appear with all possible channels and the operator can select the current channel. A server IP address indicator **1626** indicates an IP address of a current server transmitting trigger signals across the computer communications network. A disconnect button **1630** can be used by a local operator to turn off the system, typically resulting in a channel being displayed on an output device as originally broadcast (with no ad replacements).

FIG. **17** is a sequence diagram illustrating a typical operation of the present invention, according to an embodiment of the present invention.

The sequence diagram shows operations occurring at a monitoring application **1700** (typically a monitoring workstation), a server **1702** associated with the monitoring application **1700**, a network status server **1704** (typically associated with a network monitoring workstation), an ad manager **1706**, a video inserter **1708** and a pub GUI **1710** (all three typically located at a recipient such as a pub). It is noted that this sequence diagram is just one possible implementation of the invention, although numerous other implementations can be used as well. Specific messages, function calls and names may vary.

First, a channel at the pub is selected by a local operator, and a SetChannel signal **1712** is transmitted to the pub GUI**1 1710**. The SetChannel signal **1712** comprises a currently tuned channel at the pub. Then, a CurrentChannel signal **1714** is transmitted from the pub GUI **1710** to the ad manager **1706**. The CurrentChannel signal **1714** comprises the currently tuned channel.

An AdBreakStart signal **1716** is transmitted from the monitoring application **1700** to the server **1702**, for example when a human operator views a commercial (this configuration can also be used for automatic detection as well). An AdBreakStart signal **1718** is then transmitted from the server **1702** to the ad manager **1706**. The AdBreakStart signals **1716**, **1718** are a trigger indicated at a beginning of an advertisement.

If the current channel (as transmitted in the current channel signal **1714**) matches the current channel as contained in the AdBreakStart signal **1718**, then the ad manager **1706** initiates

a SelectAd operation **1720** which selects an advertisement to display, for example, from a queue. The ad manager **1706** then transmits a StartInsert signal **1722** to the video inserter **1708**, which triggers a SetVideoSource operation **1724** (which can select a desired video source from a switch) and a PlayAd operation **1726** (which starts playback of the selected ad) to start an insertion of a replacement advertisement. Then, a VideoStatus signal **1728** is transmitted from the video inserter **1708** to the ad manager **1706**. A VideoStatus signal **1730** is then transmitted from the ad manager **1706** to the network status server **1704**. The VideoStatus signals **1728**, **1730** are signals comprising the status of the recipient (e.g., node ID channel watched, mode, etc).

An AdBreakContinue signal **1732** and an AdBreakEnd signal **1736** are transmitted from the monitoring app **1700** to the server **1702**. The AdBreakContinue signal **1732** is a signal indicating an ad will continue. The AdBreakEnd signal **1736** is a signal indicated an ad is over or will end at a certain interval.

An AdPlayComplete signal **1734** is transmitted from the video inserter **1708** to the ad manager **1706**, initiating a SelectAd operation **1738** and then transmitting a StartInsert signal **1740** to the video inserter **1708**, triggering a PlayAd operation **1742** which plays another ad. An AdPlayComplete signal **1744** is transmitted from the video inserter **1708** to the ad manager **1706**. The AdPlayComplete signals **1734**, **1744** are used to indicate completion of playing a particular ad. An EndInsert signal **1746** is transmitted from the ad manager **1706** to the video inserter **1708**, triggering a SetVideoSource operation **1748** which changes the video source back to the broadcast source.

A VideoStatus signal **1750** is then transmitted from the video inserter **1708** to the ad manager **1706**. A video status signal **1752** is then transmitted from the ad manager **1706** to the network status server **1704**.

FIG. **18** is a block diagram illustrating an apparatus for processing a composite video signal, according to an embodiment of the present invention.

A composite signal (from any type of source such as satellite dish, land cable, etc.) enters into a channel tuner/splitter **1800**. The channel tuner/splitter **1800** tunes to a plurality of channels contained in the composite signal and splits each channel into a different output. The channel tuner/splitter **1800** may simply comprise a splitter generating output to a plurality of tuners (each tuned to a particular channel) with an output for each. The channel tuner/splitter **1800** may also comprise an amplifier and/or any other hardware needed to accurately perform its operations as known in the art.

Detection/replacement device A **1802** receives output from the channel tuner/splitter **1800** which comprises a video signal for channel A, and then performs the detection/replacement using any of the methods/configurations described herein. The detection/replacement device A **1802** then outputs the (possibly) modified channel A to a channel combiner **1808**. Not pictured in FIG. **6** is an optional connection from the detection/replacement device A **1802** to a computer communications network, which can be used to receive remote trigger signals or any other purpose. Also not pictured are other components described herein, such as a fingerprint storage, local advertisement storage, etc., which can be used and configured at the operators discretion.

Detection/replacement device B **1804** and detection/replacement device C **1806** operate similarly as detection/replacement device A **1802** and output their respective signal to the channel combiner **1808**. It is also noted that alternative configurations can also be implemented, such as combining the tuner into each detection/replacement device, thus removing the need for the channel tuner/splitter **1800** and instead requiring just a splitter. Or alternatively, a single detection/replacement device can tune and process multiple channels simultaneously, reducing the required hardware even more.

Once the channels that have been processed are input into the channel combiner **1808**, the channel combiner **1808** generates a composite signal from the inputs. Not all channels in the composite signal need to be processed, and such non-processed channels can be combined into the composite signal by the channel combiner **1808** in their intact original form. Such non-processed channels can be split by the channel tuner/splitter **1800** and passed straight to the channel combiner **1808**.

After the individual channels are combined into a composite video signal by the channel combiner **1808**, the composite signal is then output to a distributor **1810**. The distributor **1810** then distributes the composite signal to multiple output devices such as television 1 **1812**, television 2 **1814**, and television 3 **1816**. Each of users of television 1 **1812**, television 2 **1814**, and television 3 **1816** are free to tune the channel to a channel of their choosing. Some or all of the channels tuned by the user may contain replacement advertisements. This fact may even be transparent to the user.

This embodiment is advantageous to any establishment which transmits multiple video signals to clients or customers, such as hotels, hospitals, vehicles such as airlines (with individual output devices at each seat), schools, etc. For example, a hotel can replace standard advertisements with their own advertisements for their products (for example their own restaurants) and/or services and transmit the composite signals to some or all of their guest rooms.

In yet a further embodiment of the present invention, replacement portions (such as advertisements) displayed on the televisions (or other output device) can be targeted to individuals assigned to those televisions. For example, a hotel may wish to utilize the embodiment as described above and illustrated in FIG. **7**. However, instead of using the same replacement portions for each television (and viewer), replacement portions can be specially targeted to each respective viewer of each television.

Thus, in the previous embodiments, advertisements can be targeted to both individual patrons as well as serving the benefit of the local operator (e.g., business owner such as a hotel or hospital).

FIG. **19** is a block diagram illustrating an apparatus for targeting replacement portions based on a destination of the replacement portion, according to an embodiment of the present invention.

An original video signal enters a splitter **1900**. The video signal can be any kind of video signal, analog, digital, single channel, composite, etc. The splitter **1900** splits the video signal into a plurality of additional signals which serve as inputs to detection/replacement apparatus A **1902**, detection/replacement apparatus B **1904** and detection, insertion replacement C **1906**.

Detection/insertion replacement A **1902** can comprise hardware using any configuration (including any combination) of any system(s) described herein. For example, this apparatus can process a composite video signal, an individual channel video signal, use local or remote detection, etc.

Detection/replacement apparatus A **1902** interfaces with a viewer database **1908** which may contain information regarding some or all of the viewers using the system. Depending on information found in the viewer database **1908**, particular replacement portions can be selected.

Selecting appropriate replacement portions can be achieved by storing desired characteristics for each replace-

ment portion. When it is time to choose a replacement portion, these characteristics are matched with a viewer's data in the database and replacement portions with positive matches are selected. Default replacement portions can also be used when there are no (or no remaining) matches for replacement portions.

After a particular replacement portion is selected, the detected segment is replaced with the replacement portion as described herein.

This same process is performed for each detection/replacement apparatus, e.g., detection/replacement apparatus A **1902**, detection/replacement apparatus B **1904** and detection/replacement apparatus C **1906**. The output for each of these apparatuses is output to output device A **1910**, output device B **1912**, and output device C **1914**, respectively. If a composite signal is used in this embodiment, then individual channels are processed accordingly. The viewer may scan the channels and it may be transparent that advertisements on a plurality of channels have been replaced especially targeted for him or her.

As one example of this embodiment, a hotel may maintain a viewer database **1908** that contains information that viewer A (in a particular room) is from a particular state. The hotel may then wish to choose a replacement portion advertising products or services available in that state. For example if the viewer database **1908** stores that viewer A is from New York, then the hotel may wish to use as a replacement portion an advertisement for one of their other hotels located in New York. This particular advertisement can be used on any or all of the channels the viewer is able to watch. Any characteristics known to the viewer database **1908** can be used to select replacement portions. The viewer database **1908** can be for example be any SQL database as known in the art. The viewer database **1908** can be populated by any information known about a viewer, for example a hotel can use information in a patron's record to populate the patron's database record in the viewer database **1908**, or the viewer database **1908** be the same database as the hotel uses itself for their records.

FIG. **20** is a circuit diagram illustrating connecting an ad inserter pc, according to an embodiment of the present invention.

A connection apparatus **2000** is used to connect inputs to a television (either directly or through an indirect manner such as a splitter). Connection apparatus **2000** is one set of inputs to a switch (not pictured) such as selector **608**. The other set of inputs into the switch comes from the original broadcast or signal. An LPT1 interface **2002** is connected to an LPT1 port **2006** of an ad inserter pc **2004**. The LPT1 port **2006** is used to activate the connection apparatus **2000** so that if no on trigger is received by the connection apparatus **2000** then the inputs to the connection apparatus are not used by the connection apparatus and an alternate input source is used. Note that a serial port can also be used instead of a parallel port for this purpose.

A video card **2008**, such as a ATI Radeon "All In Wonder"—9000, is used by the ad inserter PC **2004** which is connected to the connection apparatus **2000**. A sound card **2010** is also used by the ad inserter PC **2004**.

It is noted that all of the above embodiments can be configured with any combination of digital/analog inputs and digital/analog outputs in order to suit needs of the users.

Further, special arrangements can be made with networks and other originators of video programming in order to be able to replace advertisements. Originators may even provide trigger signals as part of the arrangement. Alternatively, replacements/detections can be made unilaterally.

It is also noted that any and/or all of the above embodiments, configurations, variations of the present invention described above can be mixed and matched and used in any combination with one another. Any claim (or subject matter therein) can be combined with any others (unless the results are nonsensical).

Moreover, any description of a component or embodiment herein also includes hardware, software, and configurations which already exist in the prior art and may be necessary to the operation of such component(s) or embodiment(s).

All embodiments of the present invention, including the ad reselling system, can be realized in a number of programming languages including (but not limited to) C, C++, Perl, HTML, Pascal, and Java, although the scope of the invention is not limited by the choice of a particular programming language or tool. Object oriented languages have several advantages in terms of construction of the software used to realize the present invention, although the present invention can be realized in procedural or other types of programming languages known to those skilled in the art.

The many features and advantages of the invention are apparent from the detailed specification. Thus, the appended claims are to cover all such features and advantages of the invention that fall within the true spirit and scope of the invention. Furthermore, since numerous modifications and variations will readily occur to those skilled in the art, it is not desired to limit the invention to the exact construction and operation illustrated and described. Accordingly, appropriate modifications and equivalents may be included within the scope of the invention.

Although this invention has been illustrated by reference to specific embodiments, it will be apparent to those skilled in the art that various changes and modifications may be made which clearly fall within the scope of the invention.

What is claimed is:

1. A method for video detection and replacement, the method comprising:

receiving an input video signal;

creating a temporal sliding window of initial length L seconds and running the sliding window the input video signal, such that at least a portion of the input video signal is captured by the temporal sliding window;

comparing a first segment of the portion of the input video signal captured by the temporal sliding window of initial length L seconds to a portion of stored fingerprint data;

expanding the temporal sliding window to have an expanded length approximately equal to the length of the stored fingerprint data if the first segment of the portion of the input video signal matches the portion of stored fingerprint data;

comparing an expanded segment of the input video signal captured by the expanded window having the expanded length with the stored fingerprint data; and

generating an output video signal comprising the input video signal, wherein the expanded segment of the input video signal is replaced with a replacement portion if the expanded segment of the input video signal matches the fingerprint data.

2. The method as recited in claim **1**, further comprising;

automatically receiving fingerprint data of segments to be identified via a computer communications network; and

storing the fingerprint data.

3. The method as recited in claim **2**, wherein the fingerprint data is transmitted periodically.

4. The method of claim **1**, wherein the replacement portion comprises at least one advertisement.

5. The method of claim **1**, wherein the replacement portion is selected based at least in part on the geographic location.

6. The method of claim **1**, wherein the selection of a replacement portion is based at least in part on the received input video signal.

7. The method of claim **1**, further comprising:

storing characteristics of the fingerprint data prior to the comparison of the first segment of the portion of the input video signal to the portion of stored fingerprint data;

storing characteristics of potential replacement portions prior to the comparison of the first segment of the portion of the input video signal to the portion of stored fingerprint data; and

selecting the replacement portion based at least in part on comparing the characteristics of the stored fingerprint data and the characteristics of the potential replacement portions.

8. A method for video detection and replacement, the method comprising:

(a) receiving an input video signal;

(b) capturing a captured portion of L seconds of the received input video signal;

(c) comparing the captured portion of the input video signal to an L second long portion of stored fingerprint data, the stored fingerprint data having a total fingerprint length greater than or equal to L;

(d) if the captured portion of the input video signal matches the portion of stored fingerprint data, capturing an additional portion of the received input video signal, the additional portion being contiguous with the captured portion, such that an entire captured portion comprising the captured portion of the received input video signal plus the additional portion has an entire captured length that is approximately equal in length to the total fingerprint length of stored fingerprint data;

(e) comparing the entire captured portion of the received input video signal to the stored fingerprint data; and

(f) generating an output video signal comprising the input video signal, wherein the entire captured portion of the input video signal is replaced with a replacement portion if the entire captured portion of the input video signal substantially matches the fingerprint data.

9. The method of claim **8**, further comprising;

(g) automatically receiving fingerprint data of segments to be identified via a computer communications network; and

(h) storing the fingerprint data.

10. The method of claim **9**, wherein the fingerprint data is transmitted periodically.

11. The method of claim **8**, wherein the replacement portion comprises at least one advertisement.

12. The method of claim **8**, wherein the replacement portion is selected based at least in part on a geographic location.

13. The method of claim **8**, wherein selection of a replacement portion is based at least in part on the received input video signal.

14. The method of claim **8**, further comprising:

(g) storing characteristics of the fingerprint data prior to the comparison of step (c);

(h) storing characteristics of potential replacement portions prior to the comparison of step (c); and

(i) selecting the replacement portion based at least in part on comparing the characteristics of the stored fingerprint data and the characteristics of the potential replacement portions.

* * * * *