No. 203675 Class **24e**

SWISS CONFEDERATION

SWISS FEDERAL INSTITUTE OF INTELLECTUAL PROPERTY

PATENT SPECIFICATION

Published on June 16, 1939

[seal: ETH LIBRARY ZURICH]

Application filed: May 27, 1938, 8 p.m. — Patent registered: March 31, 1939.

MAIN PATENT

Peter JÖRG, Chur (Graubünden, Switzerland).

Vacuum Cleaner.

The known vacuum cleaners have the disadvantage that they require a relatively large number of exchangeable suction pieces to carry out the various cleaning tasks during the cleaning job, which cannot be left on the appliance at the same time, but have to be left lying around or placed in a bag. This slows down a quick transition from one cleaning job to another. Furthermore, most vacuum cleaners are too rigid to be handled as a whole, too cumbersome to always be able to operate them in such a way that the suction piece (nozzle or brush) is close enough to the surface to be cleaned or to be able to guide the suction piece comfortably to places that are difficult to access.

The present invention relates to a vacuum cleaner in which suction nozzles and suction brushes can be connected to the vacuum cleaner housing both directly and with the interposition of tubular and articulated parts so that they can be rotated, individually exchanged and combined with one another, the rotatability of the suction pieces being made possible by the connecting threads of the same.

The drawing illustrates, for example, an embodiment of the object of the invention. The figures show:

Fig. 1 a longitudinal section through the vacuum cleaner housing with internal parts without external accessories,

Fig. 2 the vacuum cleaner ready for use for cleaning the floor,

Fig. 3 the vacuum cleaner ready for use for cleaning upholstered furniture,

Fig. 4 a view of the vacuum cleaner ready for use for cleaning areas that are difficult to access, for example under and behind furniture,

Fig. 5 to 9 are accessories of the vacuum cleaner, and

Fig. 10 is a section along line I-I in Fig. 9 of the combined suction nozzle and brush piece.

The vacuum cleaner shown has a housing formed by two differently

sized covers 1, 2, and a casing 3 inserted between them. 4 is the fan, the housing of which is attached to the housing cover 1 by its flange 5 by means of a support ring 6 using a sealing insert 7 by means of the screws 8. The exhaust opening of the fan is connected to an exhaust nozzle 10 inserted into the housing cover 1 and provided with a rubber grip 9. At a distance from the intake opening of the fan housing, the motor 11 is screwed to the latter, which carries the air intake nozzle 13 through a connecting piece 12, which passes through the housing cover 2 and has a lateral outlet opening 14 which opens into the interior of the housing. The end of the air intake nozzle 13 protruding through the housing cover 2 is provided with a connecting thread 15. Similarly, the end of the exhaust nozzle 10 is also provided with a connecting thread 16 of the same dimensions as the connecting thread 15. The dust bag or dust filter is labeled 17 and has a conical shape. Its lower end is attached to the connecting piece 12, while a spiral spring ring 18 is sewn into the enlarged upper end. The edge of the dust bag provided with the sewn-in spiral spring 18 is held over a rubber sealing ring 19, which is attached to the circumference of the fan housing and seals between it and the edge of the upper cover 1. 20 is the power supply cable of the motor 11, which is provided with an intermediate switch 21. The main accessory of the vacuum cleaner is a pipe angle 22 with a connection sleeve 23 at one end and a connecting thread 23' at the other end. This pipe angle 22 can be connected to the connecting thread 15 of the air intake nozzle 13 by means of its socket 23. Its connecting thread 23' is used to connect the suction pieces (suction nozzles, suction brushes). The suction piece for cleaning floors, carpets, and the like is a segment-shaped piece 24 with a wedge-shaped cross-section, combined of a suction nozzle and suction brush, to the back of which a fitting piece 25 with an internal thread is attached, which forms the connection opening. The wedge surfaces of the suction piece are each provided with a suction opening 26, 27, which communicate with the connection opening, as well as with a cambered metal edge 28 and 29 respectively, of which the metal edge 29 is covered with a bristle ring 30. A rubber strip 31 sits on the edge formed by the wedge surfaces of the suction piece 24, which is clamped between the metal edges 28 and 29 protruding over the edge and serves to protect the furniture against knocks during cleaning work. An end plug 32 is used to close off one or other of the suction openings 26 or 27, depending on whether the suction nozzle or the suction brush is being used. For easier handling of the vacuum cleaner during floor and carpet cleaning work, an extension rod 33, which has a connection sleeve 34 at one end and a connecting thread 35 at the other end, is connected to the connecting thread 16 of the exhaust nozzle 10. This extension rod 33 is provided with a clip or clamp 36 for clamping the power supply cable 20 for better guidance of the same. Fig. 3 shows the vacuum cleaner ready for cleaning floors, carpets, and the like. The connecting threads between the pipe angle 22 and the suction piece 24 are not fully tightened, but can still rotate slightly. As a result, the pipe angle 22 between the vacuum cleaner housing and the suction piece achieves a special articulation which allows the suction edges of the suction piece to always rest well on the surface to be cleaned, whereby the inclination of the extension rod in relation to the floor can be changed. This makes it easy to work under tables, chairs, and similar furniture. Particularly hard-to-reach areas of the floor or walls obstructed by furniture can also be reached effortlessly if, as Fig. 4 shows,

the extension rod 33 is inserted between the vacuum cleaner housing and the pipe angle.

For cleaning upholstery and its folds, a slim wooden nozzle 37 gradually reduced in diameter towards the front end with a lateral suction slot 38 and a rubber connection sleeve 39 pushed over its rear end serves as the suction piece. This suction nozzle 37 can also be connected to the vacuum cleaner housing by interposing the pipe angle 22, as illustrated in Fig. 3. The extension rod 33 can be omitted for cleaning upholstered furniture. On the other hand, the suction nozzle 37 can be combined with a rim brush 40, which, as Fig. 8 shows, can be slid onto the rubber sleeve 39. The rim brush 40 can also be used on its own by attaching it to the pipe angle 22 using the rubber sleeve 39 (Fig. 7).

A particular advantage in cleaning work with the vacuum cleaner described is the fact that the suction pieces not currently in use can either be plugged or screwed onto the connecting thread 16 of the exhaust nozzle 10 or, when using the extension rod 33, onto its connecting thread 35 and are therefore always at hand during the work, i.e., do not have to lie around or be provided in any other way. This enables the suction pieces to be changed quickly when switching from one cleaning job to another.

CLAIM:

Vacuum cleaner, characterized in that suction nozzles and suction brushes can be connected to the vacuum cleaner housing both directly and with the interposition of tubular and articulated parts so as to be rotatable, individually exchangeable, and combinable with one another, the rotatability of the suction pieces being made possible by the connecting threads thereof.

DEPENDENT CLAIMS:

1. Vacuum cleaner according to the claim, characterized in that suction nozzles and suction brushes have such a design that it is possible to leave the suction pieces on the vacuum cleaner housing during operation even when they are not in use.
2. Vacuum cleaner according to the claim and dependent claim 1, characterized in that a nozzle used for cleaning upholstery and its folds can be combined with a rim brush.
3. Vacuum cleaner according to the claim and dependent claim 1, characterized in that a suction piece serving for floor and carpet cleaning, and connectable to the vacuum cleaner housing, has a suction nozzle on one side and a suction brush on the other side, the respective unused suction opening being sealable.
4. Vacuum cleaner according to the claim and dependent claim 1, characterized in that the rotatability between the vacuum cleaner housing and a suction piece serving for floor and carpet cleaning is made possible by an interposed pipe angle provided with a connecting thread, the thread connecting the pipe angle to the suction piece permitting rotation of these parts relative to one another.

Peter JÖRG.
Representatives: REBMANN, KUPFER & Co., Zurich

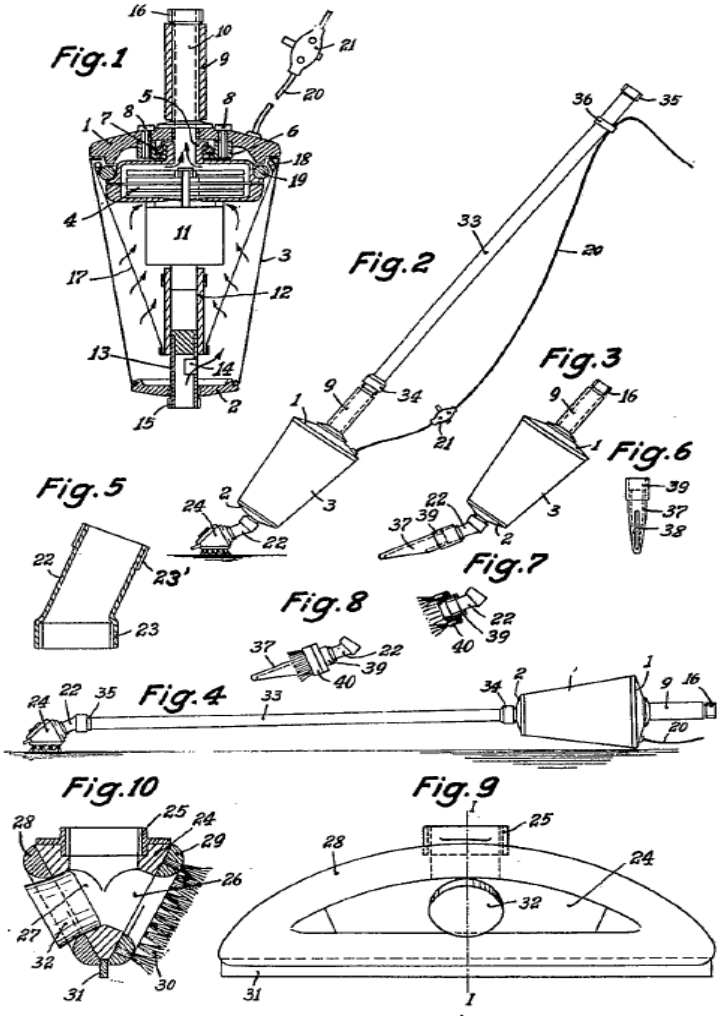
Fig.1
Fig.2
Fig.3
Fig.4
Fig.5
Fig.6
Fig.7
Fig.8
Fig.9
Fig.10

MORNINGSIDE

TRANSLATOR CERTIFICATION

Date: November 30, 2023

To whom it may concern:

I, Peter Niederlohner, a translator fluent in the German and English languages, on behalf of Morningside Translations, do solemnly and sincerely declare that the following is, to the best of my knowledge and belief, a true and correct translation of the document(s) listed below in a form that best reflects the intention and meaning of the original text.

The document is designated as:

- CH203675A

Signature

Peter Niederlohner

Print