UNITED STATES DISTRICT COURT
NORTHERN DISTRICT OF TEXAS
DALLAS DIVISION

FEIT ELECTRIC COMPANY, INC.,	§	
	§	
Plaintiff,	§	
	§	
v.	§	Civil Action No. 3:24-CV-1089-X
	§	
ELONG INTERNATIONAL USA, INC. and XIAMEN LONGSTAR LIGHTING CO., LTD.,	§	
	§	
Defendants.	§	

MEMORANDUM OPINION AND ORDER

Before the Court is the parties' claim construction briefing. (Docs. 47, 52, 53). After reviewing the briefing, the supporting material filed with the briefing, and the relevant caselaw, and having further considered the parties' arguments at the claim construction hearing, the Court hereby construes terms and phrases of the claims of the patent in suit and decides whether certain claims are indefinite.

I. Factual Background

This is a patent infringement case. Plaintiff Feit Electric Company (Feit) asserts that Defendants Elong International USA, Inc. and Xiamen Longstar Lighting Co., Ltd. (collectively, "Defendants") have infringed U.S. Patent No. 8,604,678 (the "'678 Patent"). The parties dispute the meaning of certain terms and phrases of claims of the '678 Patent. The parties also dispute whether certain claims are indefinite. The Court hereby resolves these disputes, construing the terms and

phrases identified by the parties and, in the process, deciding whether certain claims are indefinite.

II. Legal Standards

A. Claim Construction

The construction of patent claim terms "is exclusively within the province of the court."[1] The Court construes only the terms "that are in controversy, and only to the extent necessary to resolve the controversy."[2]

The words of a claim "are generally given their ordinary and customary meaning."[3] The ordinary and customary meaning is the meaning the claim term would have to a person of ordinary skill in the field of technology of the invention at the time of the invention.[4]

The ordinary meaning "may be readily apparent even to lay judges," and in this situation claim construction "involves little more than the application of the widely accepted meaning of commonly understood words."[5] In these situations, general purpose dictionaries are useful.[6] But, in many cases, claim terms have a particular meaning in a field of technology.[7] To identify the particular meaning in a field of technology, the Court looks to sources of meaning available to the public that

---

[1] *Markman v. Westview Instruments, Inc.*, 517 U.S. 370, 372 (1996).

[2] *Vivid Technologies, Inc. v. American Sci. & Eng'g, Inc.*, 200 F.3d 795, 803 (Fed. Cir. 1999).

[3] *Phillips v. AWH Corp.*, 415 F.3d 1303, 1312 (Fed. Cir. 2005) (en banc) (cleaned up).

[4] *Id.* at 1313.

[5] *Id.* at 1314.

[6] *Id.*

[7] *Id.*

show what a person of ordinary skill in the technology would have understood disputed claim language to mean.[8] These sources include "the words of the claims themselves, the remainder of the specification, the prosecution history, and extrinsic evidence concerning relevant scientific principles, the meaning of the technical terms, and the state of the art."[9]

The specification, in particular, "is the single best guide to the meaning of a disputed term."[10] The "specification includes both the written description and the claims of the patent."[11] The specification also includes the patent's figures.[12]

The prosecution history, in turn, "can often inform the meaning of the claim language by demonstrating how the inventor understood the invention and whether the inventor limited the invention in the course of prosecution, making the claim scope narrower than it would otherwise be."[13] Because it represents an ongoing negotiation between the patent examiner and the inventor, "rather than the final product of that negotiation, it often lacks the clarity of the specification and thus is less useful for claim construction purposes."[14]

As mentioned, the Court may also rely on extrinsic evidence, which "consists of all evidence external to the patent and prosecution history, including expert and

---

[8] *Id.*

[9] *Id.* (cleaned up).

[10] *Id.* at 1315 (cleaned up).

[11] *Cisco Sys., Inc. v. TQ Delta, LLC*, 928 F.3d 1359, 1362 (Fed. Cir. 2019) (cleaned up).

[12] *See Tate Access Floors, Inc. v. Interface Architectural Res., Inc.*, 279 F.3d 1357, 1361 (Fed. Cir. 2002).

[13] *Phillips*, 415 F.3d at 1317 (cleaned up).

[14] *Id.*

inventor testimony, dictionaries, and learned treatises.[15] But extrinsic evidence in general is less reliable than the patent and its prosecution history in determining how to read claim terms.[16] In short, extrinsic evidence may be useful, but reliance on it is "unlikely to result in a reliable interpretation of patent claim scope unless considered in the context of the intrinsic evidence."[17]

B. Definiteness

As part of claim construction, the Court has been asked to decide whether certain claims meet the "definiteness" requirement of 35 U.S.C. § 112, ¶ 2.[18] This statutory provision requires that the patent specification "conclude with one or more claims particularly pointing out and distinctly claiming the subject matter which the applicant regards as his invention."[19] Notably, "an analysis under § 112, ¶ 2 is inextricably intertwined with claim construction."[20]

"[A] patent is invalid for indefiniteness if its claims, read in light of the specification delineating the patent, and the prosecution history, fail to inform, with reasonable certainty, those skilled in the art about the scope of the invention."[21] This

---

[15] *Id.* (cleaned up).

[16] *Id.* at 1318.

[17] *Id.* at 1319.

[18] Congress replaced 35 U.S.C. § 112, ¶ 2 with § 112(b), effective on September 16, 2012. Leahy-Smith America Invents Act ("AIA"), Pub. L. No. 112-29, 125 Stat. 284 (2011). Because the application resulting in the patent in suit was filed before that date, the Court refers to the pre-AIA version of section 112.

[19] 35 U.S.C. § 112, ¶ 2.

[20] *Atmel Corp. v. Info. Storage Devices, Inc.*, 198 F.3d 1374, 1379 (Fed. Cir. 1999).

[21] *Nautilus, Inc. v. Biosig Instruments, Inc.*, 572 U.S. 898, 901 (2014).

standard "mandates clarity, while recognizing that absolute precision is unattainable."[22]

Patents are presumed to be valid, and clear and convincing evidence is required to overcome this presumption.[23] Thus, "[a]ny fact critical to a holding on indefiniteness . . . must be proven by the challenger by clear and convincing evidence."[24]

III. Construction of Terms and Phrases of the Asserted Patent

A. Person of Ordinary Skill

As noted above, the words of a claim are usually given their ordinary and customary meaning, that is, the meaning the words would have to a person of ordinary skill in the field of technology of the invention at the time of the invention.[25] According to Feit, a person of ordinary skill in the field of technology of the '678 Patent "would have had an undergraduate degree in electrical engineering, chemical engineering, materials science, physics, or a similar discipline in addition to at least two years of experience in the field of [Light Emitting Diode] packaging design," with more education substituting for experience and vice versa.[26] The Defendants do not contest this description of the person of ordinary skill in the field of technology of the invention. As a result, the Court construes the terms and phrases of the '678 Patent

[22] *Id.* at 910.

[23] *Microsoft Corp. v. i4i Ltd. P'ship*, 564 U.S. 91, 95 (2011).

[24] *Intel Corp. v. VIA Techs., Inc.*, 319 F.3d 1357, 1366 (Fed. Cir. 2003).

[25] *See Phillips*, 415 F.3d at 1312–13.

[26] Doc. 47 at 6.

from the perspective of a person holding an undergraduate degree in electrical engineering, chemical engineering, materials science, physics, or a similar discipline in addition to at least two years of experience in the field of LED packaging design, with more education substituting for experience and vice versa.

B. The '678 Patent

The Court construes terms and phrases of the '678 Patent and decides whether certain claims of the '678 Patent are indefinite as follows.

1. "improves an off-state white appearance of the wavelength conversion component"/"improves an OFF state white appearance of the wavelength conversion component" (Claims 1, 19, 29)

The parties dispute the meaning and definiteness of "improves an off-state white appearance of the wavelength conversion component" as it is used in Claims 1 and 29 and "improves an OFF state white appearance of the wavelength conversion component" as used in Claim 19. Feit asserts these phrases should be given their "plain and ordinary meaning," by which Feit means the Court should not provide any definition because the phrases are "not technical or particularly difficult for a typical lay juror or judge to understand."[27] The Defendants, by contrast, assert the phrases render the associated claims indefinite because they provide "no objective boundaries" and are "purely subjective."[28]

The Court concludes that the Defendants have not met their burden of proving that these phrases render their associated claims indefinite. As for the claim

[27] Doc. 47 at 6.

[28] Doc. 52 at 3.

language, the Defendants argue the phrases provide no objective boundaries because they do not specify what level of improvement of the off-state white appearance of the wavelength conversion component is required.[29] But the claims plainly allow for any improvement of the off-state white appearance of the wavelength conversion component. That does not make the claims indefinite. The Defendants also complain that the claims do not provide any standard or baseline against which to compare the claimed improvement.[30] But the claims by their terms indicate that the claimed "light diffusing layer" provides the improvement in the off-state white appearance of the wavelength conversion component. As a result, it is clear that the baseline against which to compare the claimed improvement is a similar device that does not include the claimed "light diffusing layer." This, again, does not make the claims indefinite.

As for the rest of the specification, the Defendants argue it fails to provide guidance because it does not quantify the improvement.[31] As discussed above, however, the claims plainly allow for any improvement of the off-state white appearance of the wavelength conversion component. The claims, in short, do not require quantification of the improvement. Moreover, the written description describes a qualitative improvement in the off-state white appearance of the wavelength conversion component. As it describes in detail, in a conventional LED lighting device in an off state the LED chip or die does not generate any blue light

[29] Doc. 52 at 3.

[30] Doc. 52 at 3.

[31] Doc. 52 at 4.

and instead light produced by a remote phosphor lighting apparatus is based at least in part upon external light (*e.g.*, sunlight or room lights) that excites the phosphor material in the wavelength conversion component.[32] The result is that in the conventional device the wavelength conversion component generates a yellowish, yellow-orange, or orange color in the photoluminescence light.[33] By contrast, the written description explains, incorporating a light diffusing layer substantially reduces the passage of external excitation light that would otherwise cause the wavelength conversion component to re-emit light of a wavelength having a yellowish/orange color.[34] In short, it says, incorporating the light diffusing layer will cause the device to have more of a white appearance in an off state because the wavelength conversion component is emitting less yellow-red or yellow-orange photoluminescent light.[35]

Relatedly, the Defendants argue the specification fails to clarify whether the improvement in the off-state white appearance of the wavelength conversion component must be "readily perceptible by a person or merely analytically perceptible."[36] The claims, however, refer to the "appearance" of the wavelength conversion component, and the written description similarly refers to "appearance" in the context of how light "appears to the human eye."[37] Indeed, in the exact context

[32] U.S. Patent No. 8,604,678 col. 10, l. 59–col. 11, l. 9.

[33] *Id.* at col. 11, ll. 9–10.

[34] *Id.* at col. 11, ll. 19–27.

[35] *Id.* at col. 11, ll. 33–47.

[36] Doc. 52 at 5.

[37] *See, e.g.*, '678 Patent at col. 11, l. 2.

of the claimed improvement the written description describes "improving the visual appearance of the device in an OFF state to an observer."[38] Given this context, it is clear that the claimed improvement needs to be perceptible to an observer. This does not make the claims indefinite.

The Defendants' last argument is that the term "improves" is indefinite because it is subjective.[39] The Court disagrees. In the context of the '678 Patent, the claimed "improvement" is not subjective. The claimed improvement is to the "off-state white appearance of the wavelength conversion component." And, as discussed above, the written description explains that incorporating the light diffusing layer will cause the device to have more of a white appearance in an off state because the wavelength conversion component is emitting less yellow-red or yellow-orange photoluminescent light.[40] This is wholly unlike the concept of an interface screen being "aesthetically pleasing," which is "completely dependent on a person's subjective opinion" and therefore "the unpredictable vagaries of any one person's opinion of the aesthetics of interface screens."[41] Thus, while the Defendants rely upon *Datamize*, even to the extent it is good law after *Nautilus*, it does not point in the direction of indefiniteness.

Indeed, the Federal Circuit has subsequently explained that "aesthetically pleasing" is "purely subjective" because it "implicates matters of taste or preference;

---

[38] *Id.* at col. 11, ll. 21–22.

[39] Doc. 52 at 5–7.

[40] '678 Patent at col. 11, ll. 33–47.

[41] *Datamize, LLC v. Plumtree Software, Inc.*, 417 F.3d 1342, 1350 (Fed. Cir. 2005), *abrogated by Nautilus*, 572 U.S. 898.

whether something is aesthetically pleasing is a value judgment that inherently varies from person to person."[42] By contrast, the Federal Circuit has held that a claim term depending on what can be seen by the normal human eye "provides an objective baseline through which to interpret the claims."[43] It has also explained that "the written description is key to determining whether a term of degree is indefinite," and it has looked to the written description of patents "to determine whether there is some standard" for making the relevant determination.[44] Here, as discussed above, the human eye provides the objective baseline through which to determine whether, as the written description describes, the wavelength conversion component "will have more of a white appearance in an OFF state."[45]

At the hearing, the Defendants similarly argued indefiniteness based on the idea that the claims require "the color of one filament [to be] an improvement over the other," and "you may *prefer* the one on the right and I may *prefer* the one on the left."[46] The claims, however, do not "implicate[] matters of taste or preference."[47] The only question presented by the claims is whether the light diffusing layer improves an off-state white appearance of the wavelength conversion component in the sense that the wavelength conversion component has more of a white appearance in an off state. And that is not a matter of taste or preference.

---

[42] *Sonix Tech. Co., Ltd. v. Publications Int'l, Ltd.*, 844 F.3d 1370, 1378 (Fed. Cir. 2017).

[43] *Id.*

[44] *Id.*

[45] '678 Patent at col. 11, l. 34.

[46] Claim Constr. Hr'g Tr. 13 (emphases added).

[47] *Sonix Tech.*, 844 F.3d at 1378.

Finally, while the Defendants repeatedly cite to extrinsic evidence in the form of an expert testimony for support for their position that these phrases render their associated claims indefinite,[48] Feit's expert, Dr. Schubert, persuasively disagrees with the Defendants' expert, Dr. Doolittle.[49] Dr. Schubert concludes that a person of ordinary skill "would readily understand these terms," explaining that, "[w]ith the surrounding claim context, these 'wherein' elements are reasonably clear" to a person of ordinary skill and "mean that the light diffusing layer produces an off-state appearance of the wavelength conversion component that is whiter than an off-state appearance of a wavelength conversion component without the light diffusing layer."[50] That is consistent with the Court's construction and analysis based on the intrinsic evidence. In short, the Defendants have not proven a critical fact underlying indefiniteness by clear and convincing evidence.[51]

For all these reasons, the Court concludes that the phrases do not render their associated claims indefinite, and that in the context of the '678 Patent these phrases require the light diffusing layer to cause an observer to conclude that a wavelength conversion component has more of a white appearance in an off state.

---

[48] Doc. 52 at 2–7 (citing Declaration of William A. Doolittle, Ph.D, Exhibit 2 to Doc. 52, at ¶¶ 68, 71, 72, 74, 75).

[49] Declaration of E. Fred Schubert, Ph.D, Exhibit C to Doc. 47, at ¶¶ 11–21.

[50] *Id.* at ¶ 13.

[51] *See Intel*, 319 F.3d at 1366.

2. "an average particle size that improves the OFF state white appearance of the wavelength conversion component" (Claim 21)

The parties dispute the meaning and definiteness of "an average particle size that improves the OFF state white appearance of the wavelength conversion component" as it is used in Claim 21. Feit asserts this phrase should be given its "plain and ordinary meaning," by which Feit means "no specific construction is required."[52] The Defendants, by contrast, assert "average particle size" within this phrase renders Claim 21 indefinite "because different methods of determining particle size produce different results, depending on the method of measurement (and parameters chosen for use with that method), and the '678 Patent does not offer any guidance" to a person of ordinary skill "on how to measure the 'average particle size.'"[53]

The Court concludes that the Defendants have not met their burden of proving that this phrase renders Claim 21 indefinite. It is true, as the Defendants highlight, that the '678 Patent does not disclose any device or method for determining average particle size. Indeed, Feit does not identify any disclosure in the '678 Patent for determining average particle size.[54] Moreover, the Defendants assert, and Feit does not dispute, that "there are different methods of measuring the average particle size of particles in a particular sample," that these "methods include microscopy, laser diffraction, image analysis, and sieving," and that "[e]ach of these methods generates

[52] Doc. 47 at 12.

[53] Doc. 52 at 7.

[54] Doc. 47 at 12–14; Doc. 53 at 8–10.

a different mean diameter or size."[55] But Claim 21 does not require any particular way of measuring average particle size. Moreover, whatever way is selected, the only relevant question pursuant to the plain language of Claim 21 is whether the average particle size "improves the OFF state white appearance of the wavelength conversion component." It must.

While the Defendants seek to have the Court consider "average particle size" in isolation, "the dispositive question in an indefiniteness inquiry is whether the 'claims,' not particular claim terms, 'read in light of the specification delineating the patent, and the prosecution history, fail to inform, with reasonable certainty, those skilled in the art about the scope of the invention.'"[56] Thus, all the language of Claim 21 must be considered in determining the question of indefiniteness. That language makes clear that the average particle size of "the light scattering material within the light diffusing layer" must "improve[] the OFF state white appearance of the wavelength conversion component." This is a description of a variable (the average particle size) that, when modified, apparently can cause an effect (improving the off state white appearance of the wavelength conversion component). But rather than requiring measurement of the variable/cause (the average particle size), Claim 21 instead only requires identifying whether the desired effect occurs (whether the off-state white appearance of the wavelength conversion component is improved).

---

[55] Doc. 52 at 8 (citing for final quote Declaration of William A. Doolittle, Ph.D, Exhibit 2 to Doc. 52, at ¶¶ 90, 96).

[56] *Cox Commc'ns, Inc. v. Sprint Commc'n Co.*, 838 F.3d 1224, 1231 (Fed. Cir. 2016) (quoting *Nautilus*, 572 U.S. at 901).

For similar reasons, the Defendants' citations to precedent are inapposite. Defendants rely heavily on *Teva Pharmaceuticals USA, Inc. v. Sandoz, Inc.*[57] In that case, the Federal Circuit held a claim indefinite because it required a measurement to fall within a particular range, there were multiple ways to make the measurement, and the claims, patent, and prosecution history failed to clarify which of the ways to use.[58] But the relevant claim in that case recited "a molecular weight of about 5 to 9 kilodaltons."[59] Here, by contrast, Claim 21 does not include any particular value or range of the "average particle size." Likewise, the Defendants cite district court decisions finding claims invalid because they required specific values and their patents did not disclose which way to make the relevant measurement.[60] Again, here Claim 21 does not require any particular value or range of "average particle size."

The parties have not presented Claim 24 of the '678 Patent for construction or for an indefiniteness analysis. It, however, highlights the relevant distinction. For purposes of Claim 24, the particular way of measuring the "average particle size" must be known because Claim 24 recites the value of the "average particle size" rather than identifying whether the desired effect occurs. In particular, Claim 24 requires that "the light scattering material has an average particle size in a range

[57] 789 F.3d 1335 (Fed. Cir. 2015).

[58] *Id.* at 1341–45.

[59] *Id.* at 1338.

[60] *See Otsuka Pharm. Co. v. Torrent Pharms. Ltd.*, 151 F. Supp. 3d 525, 534 (D. N.J. 2015) ("wherein said crystals . . . have a mean particle size of 50 µm or less") *aff'd sub nom. Otsuka Pharm. Co. v. Zydus Pharms. USA, Inc.*, 694 F. App'x 808 (Fed. Cir. 2017); *Kyowa Hakka Bio, Co. v. Ajinomoto Co.*, No. 17-313, 2020 WL 3403207, at *1 (D. Del. June 19, 2020) ("adding crystals of the amino acid having an average particle size of 7 to 50 µm").

selected from the group consisting of: 1 μm to 50 μm and 10 μm to 20 μm." If one way of measuring is used, the light scattering material may have the average particle size required by Claim 24 because it falls within one of the required ranges. If another way of measuring is used, however, the same light scattering material may not have the average particle size required by Claim 24 because it does not fall within one of the required ranges. In Claim 21, by contrast, no specific value of average particle size is identified, and instead the only relevant question is whether the average particle size *however measured* "improves the OFF state white appearance of the wavelength conversion component."

At the claim construction hearing, the Defendants argued that, "if we are trying to figure out whether we have an average particle size that corresponds to an improvement of the off-state white appearance [of the wavelength conversion unit], we need to know the average particle size."[61] But the Defendants seem to argue the average particle size must be measured because the way to determine whether there is an improvement in the off-state white appearance of the wavelength conversion unit is to look at Figure 10 of the '678 Patent.[62] Figure 10, however, does not identify whether there is an improvement in the off-state white appearance of the wavelength conversion unit. As the Defendants explained, "Figure 10 is a graph of average particle size versus reflective scattering of certain types of light."[63] Figure 10 indicates a change in average particle size (however measured) changes reflective

[61] Claim Constr. Hr'g Tr. 31.

[62] *Id.* ("And what the patent tells us is you should go to figure 10.").

[63] *Id.*

scattering of light. Claim 21, by contrast, recites an average particle size "that improves the OFF state white appearance of the wavelength conversion component," which as discussed above is something perceptible to an observer. In short, Claim 21 does not require measuring average particle size to use Figure 10 to determine whether the claimed improvement has occurred.

For all these reasons, the Court concludes that "an average particle size that improves the OFF state white appearance of the wavelength conversion component" does not render Claim 21 indefinite, and that in the context of the '678 Patent this phrase requires an average particle size that causes an observer to conclude that a wavelength conversion component has more of a white appearance in an off state.

3. "light mixing chamber" (Claim 29)

The parties dispute the meaning of "light mixing chamber" as it is used in Claim 29. Feit asserts the term should be given its "plain and ordinary meaning," by which Feit means the Court should not provide any definition because the term "is readily understood" by a person of ordinary skill in the field.[64] As for what that understanding is, Feit argues that a person of ordinary skill in the field "would understand 'a light mixing chamber' to mean a volume wherein light emitters are located (where light mixes)."[65] The Defendants assert "light mixing chamber" means "an interior volume separate from the wavelength conversion component."[66]

[64] Doc. 47 at 15.

[65] *Id.* at 14.

[66] Doc. 52 at 10.

As a preliminary matter, it is important to consider the context of the claim language. Claim 29 recites "a wavelength conversion component having a three dimensional shape that is configured to enclose the one or more solid-state light emitters and to in part at least define a light mixing chamber." Thus, by its terms Claim 29 requires the *wavelength conversion component* to in part at least *define* the light mixing chamber. "Define" is a commonly understood word that, in this context, means: "To determine the boundary or spatial extent of; to settle the limits of" or "To make definite in outline or form."[67] Use of the term "define" thus indicates the wavelength conversion component determines the boundary or limits of the light mixing chamber or makes definite in outline or form the light mixing chamber. Using the wavelength conversion component to determine the boundary or limits of the light mixing chamber or to make definite the outline or form of the light mixing chamber suggests the wavelength conversion component is not part of the light mixing chamber itself.

Feit argued at the claim construction hearing that the wavelength conversion component could "define" the light mixing chamber and still "overlap" with it.[68] Feit similarly argued "you could have a configuration where the wavelength conversion layer is part of the light mixing chamber."[69] Feit, however, did not cite anything from

[67] *Define*, *Oxford English Dictionary*, *available at* https://www.oed.com/dictionary/define_v?tab=meaning_and_use#7200064 [https://perma.cc/W6GG-CEG5].

[68] Claim Constr. Hr'g Tr. 45–46.

[69] Claim Constr. Hr'g Tr. 57.

the '678 Patent providing context from which to conclude that "defining" a chamber incorporates the concept of overlapping with or filling the chamber.

The written description of the '678 Patent only confirms the understanding drawn from the claim language that the wavelength conversion component is not part of the light mixing chamber itself. The written description uses the term "light mixing chamber" only with respect to embodiments using a "remote wavelength conversion configuration, wherein a wavelength conversion component is remote to one or more light emitters."[70] With respect to "those light emitting devices," the written description explains, consistent with Claim 29, the "*wavelength conversion component* and body of those light emitting devices *define* an interior volume wherein the light emitters are located."[71] It is that "interior volume" that the written description says "may also be referred to as a light mixing chamber."[72] Consistent with the context of Claim 29, this discussion means the wavelength conversion component is not part of the light mixing chamber itself.

Immediately after this discussion of the light mixing chamber, the written description describes examples of embodiments incorporating the light mixing chamber. "For example," it says, in Figures 20A, 20B, 20C, 21A, 21B, and 21C "an interior volume 1029 is defined by the wavelength conversion component 36',

[70] '678 Patent at col. 24, ll. 50–52. The written description indicates that "[i]n this patent specification 'remotely' and 'remote' means in a spaced or separated relationship." '678 Patent at col. 7, ll. 59–60.

[71] *Id.* at col. 24, ll. 52–54 (emphases added).

[72] *Id.* at col. 24, ll. 54–55.

700."[73] Likewise, in Figures 23A and 23B "an interior volume 1325 is defined by the wavelength conversion component 1311 and the body of the linear lamp 1301."[74] And in Figures 15 and 16 "an interior volume 1415 is defined by the wavelength conversion component 36 and the body of the light bulb 204."[75] Notably, in all of these figures and descriptions, as in Claim 29, the *wavelength conversion component* and body of the light emitting devices *define* the interior volume. In short, again the wavelength conversion component is not part of the light mixing chamber itself.

And then, immediately after this description of examples of embodiments incorporating the light mixing chamber, the written description discusses how "[s]uch an interior volume provides a physical separation (air gap) of the wavelength conversion component from the light emitters that improves the thermal characteristics of the light emitting device."[76] In this way, the written description makes it clear that "such" an interior volume—in other words, the light mixing chamber—provides physical separation in the form of an air gap between the wavelength conversion component and the light emitters. Yet again, the wavelength conversion component is not part of the light mixing chamber itself.

Absent from this discussion of the light mixing chamber and the examples of embodiments incorporating the light mixing chamber is any discussion of Figures 18 and 19, the only embodiments disclosed in the '678 Patent in which the wavelength

[73] *Id.* at col. 24, ll. 55–58.

[74] *Id.* at col. 24, ll. 60–62.

[75] *Id.* at col. 24, ll. 62–65.

[76] *Id.* at col. 24, l. 65–col. 25, l. 1.

conversion component is part of the interior volume.[77] The discussion of Figures 18 and 19 does not include any discussion of a light mixing chamber.

Moreover, the discussion of Figures 18 and 19 does not correlate with what is described in Claim 29. The discussion of Figure 18 describes how "the wavelength conversion layer 46' fills a substantial portion of the volume defined by the interior surface of the light diffusing layer 44, rather than being embodied as a thin layer directly adjacent to the light diffusing layer 44."[78] Likewise, the discussion of Figure 19 describes how "the wavelength conversion layer 46" fills a substantial portion of the volume defined by the light diffusing layer 44, but in which scattering particles are also distributed within the wavelength conversion layer 46"."[79] Notably, unlike Claim 29, in both of these descriptions it is the light diffusing layer, not the wavelength conversion component as a whole, that defines the interior volume in Figures 18 and 19. Thus, in the embodiments in which the wavelength conversion layer fills a substantial portion of the interior volume, it is not the wavelength conversion layer that defines the interior volume but instead the light diffusing layer. In short, Claim 29 does not describe the embodiment of Figures 18 and 19 in which the wavelength conversion layer fills a substantial portion of the interior volume.

---

[77] In the embodiment of Figure 18, "a wavelength conversion layer substantially fills an interior volume formed by the interior surface of the dome-shaped diffusing layer." '678 Patent at col. 5, ll. 58–62. In the embodiment of Figure 19, "a wavelength conversion layer having scattering particles substantially fills an interior volume formed by the interior surface of the dome-shaped diffusing layer." *Id.* at col. 5, l. 66–col. 6, l. 2.

[78] *Id.* at col. 19, ll. 46–50.

[79] *Id.* at col. 19, ll. 62–66.

In contrast to Claim 29, Claim 18 clearly encompasses the idea associated with Figures 18 and 19 of the wavelength conversion layer filling a substantial portion of the interior volume. Claim 18 recites "the wavelength conversion layer fills a volume formed beneath the dome or elongated dome shapes." Thus, the Court's construction does not leave other disclosed embodiments entirely unclaimed.[80]

Feit does not address Claim 18 but instead Claims 27 and 28. Feit argues a comparison of independent Claims 27, 28, and 29 "shows that reading the 'separate' limitation into" Claim 29 is inappropriate because Claims 27 and 28 include the term "remote" in connection with the "wavelength conversion component," whereas Claim 29 does not.[81] That, however, is not the only difference between these independent claims. It is true that Claims 27 and 28 use the term "remote." Instead of using the term "remote," however, Claim 29 recites that the wavelength conversion component has "a three dimensional shape that is configured to enclose the one or more solid-state light emitters," language that is absent from Claims 27 and 28. This language in Claim 29 may serve a similar purpose as the term "remote" in Claims 27 and 28, particularly if the wavelength conversion component is not part of the light mixing chamber itself, as use of "light mixing chamber" suggests. Anyway, the written description describes the light mixing chamber only in the context of light emitting

[80] *See SIMO Holdings Inc. v. Hong Kong uCloudlink Network Tech. Ltd.*, 983 F.3d 1367, 1379 (Fed. Cir. 2021) ("Nor does this case involve a situation in which adopting a narrow construction of the claim at issue leaves other disclosed embodiments entirely unclaimed—though we have hardly treated such a consequence, even when it exists, as overcoming strong textual indicators of a particular claim's narrow meaning."); *Helmsderfer v. Bobrick Washroom Equip., Inc.*, 527 F.3d 1379, 1383 (Fed. Cir. 2008) ("It is often the case that different claims are directed to and cover different disclosed embodiments. The patentee chooses the language and accordingly the scope of his claims.").

[81] Doc. 47 at 15.

devices with "a remote wavelength conversion configuration."[82] In short, while Feit cites a brief discussion of claim differentiation in *Phillips v. AWH Corp.*,[83] this is not a particularly strong circumstance to use the doctrine.[84]

With all that said, Feit is correct that the "light mixing chamber" of Claim 29 is an interior volume where light mixes. The written description confirms that "[t]he light mixing chamber may be operated to mix light within the chamber."[85] Defendants do not disagree.[86]

For these reasons, the Court construes "light mixing chamber" to mean "an interior volume, separate from the wavelength conversion component, where light mixes."

4. "planar shapes" (Claim 25)

The parties dispute the meaning of "planar shapes" as it is used in Claim 25. Feit asserts the Court "should apply the plain and ordinary meaning of the term," by which Feit apparently means the Court should not provide any definition.[87] As for what the plain and ordinary meaning is, Feit argues that a person of ordinary skill in the field would understand "planar shape" to mean "a layer . . . having a uniform

---

[82] '678 Patent at col. 24, ll. 49–55.

[83] 415 F.3d at 1314 ("Differences among claims can also be a useful guide in understanding the meaning of particular claim terms.").

[84] *See Atlas IP, LLC v. Medtronic, Inc.*, 809 F.3d 599, 607 (Fed. Cir. 2015) ("[W]e have been cautious in assessing the force of claim differentiation in particular settings, recognizing that patentees often use different language to capture the same invention, discounting it where it is invoked based on independent claims rather than the relation of an independent and dependent claim, and not permitting it to override the strong evidence of meaning supplied by the specification.").

[85] *Id.* at col. 25, ll. 19–20.

[86] Doc. 52 at 10–15.

[87] Doc. 47 at 15.

thickness" that is "much smaller than its width and length."[88] The Defendants assert "planar shapes" means "substantially two-dimensional (*i.e.*, flat)."[89]

As a preliminary matter, it is important to consider the context of the claim language. Claim 19, upon which Claim 25 relies, describes "a wavelength conversion component" as comprising "a wavelength conversion layer" and "a light diffusing layer." Claim 25, in turn, describes that "the wavelength conversion layer and the light diffusing layer comprises planar shapes." Thus, by its terms Claim 25 requires the wavelength conversion layer and the light diffusing layer to have planar shapes, where Claim 19 explains that it is the wavelength conversion component that includes the wavelength conversion layer and the light diffusing layer. In this way, Claim 25 is describing that both parts of the wavelength conversion component must have planar shapes. By contrast, Claim 26, which like Claim 25 depends upon independent Claim 19, describes that "the light diffusing layer comprises a dome or elongated dome shape." The difference between these claims suggests that a planar shape is different than a dome or elongated dome shape.[90]

The written description and figures confirm that a planar shape is different than a dome or elongated dome shape. The written description distinguishes between planar shapes, on the one hand, and dome or elongated dome shapes, on the other

---

[88] *Id.* at 16–17.

[89] Doc. 52 at 15.

[90] *Phillips*, 415 F.3d at 1314 ("Differences among claims can also be a useful guide in understanding the meaning of particular claim terms."); *Aspex Eyewear, Inc. v. Marchon Eyewear, Inc.*, 672 F.3d 1335, 1349 (Fed. Cir. 2012) ("The fact that the two adjacent claims use different terms in parallel settings supports the . . . conclusion that the two terms were not meant to have the same meaning . . . .").

hand. "Whereas the wavelength conversion component 36 of FIGS. 20A, 20B, and 20C has a two-dimensional shape (e.g., is substantially planar)," the written description tells us, "the wavelength conversion component 700 of FIGS. 21A, 21B, and 21C has a three-dimensional shape (e.g., elongated dome shaped shell)."[91] In this way, the written description also indicates the difference between a planar shape and an elongated dome shape is that a planar shape is two-dimensional while an elongated dome shape is three-dimensional. The figures show these different shapes, a two-dimensional wavelength conversion component 36 (which as described and shown is substantially planar) and a three-dimensional wavelength conversion component 700 (which as described and shown is an elongated dome shaped shell):

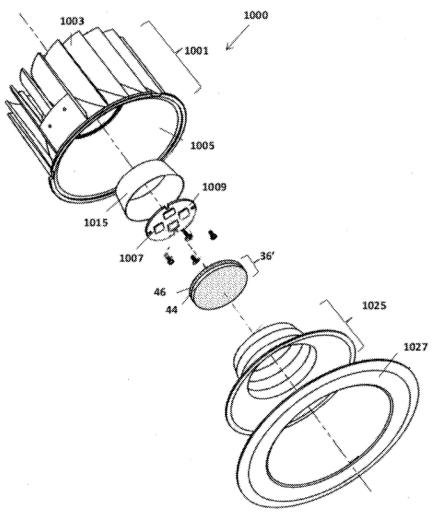

FIG. 20A

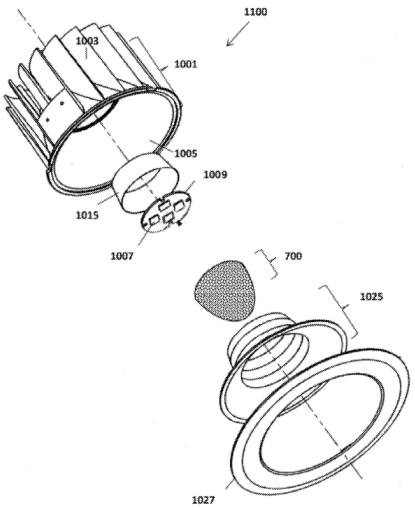

FIG. 21A [92]

The written description discusses three-dimensional wavelength conversion components in other embodiments and figures. For example, it discusses how "light

[91] '678 Patent at col. 22, ll. 22–26.

[92] '678 Patent at Figures 20A and 21A.

bulb 200," which is depicted in Figures 15 and 16, "further comprises a wavelength conversion component 36 having a three-dimensional shape, e.g., elongated dome shape shell having an interior volume defined by its inner surface that encloses the light emitters 112 within the interior volume."[93] Elsewhere it references "[t]he three-dimensional wavelength conversion components of FIGS. 15–17."[94] Likewise, it says that Figure 18 "illustrates an alternative embodiment of the invention, comprising a three-dimensional wavelength conversion component 36 that includes a dome-shaped light diffusing layer 44."[95] It also refers to Figure 24 including "a three-dimensional (e.g., elongated dome shaped shell) wavelength conversion component 700, such as the one described above in FIG. 17, 18 or 19."[96] In short, never once does the '678 Patent describe any of these embodiments, all of which have a three-dimensional wavelength conversion component having a dome shape, as including any two-dimensional or planar component. The only embodiment described as having a two-dimensional shape or planar shape is represented in Figure 20A. And, as shown above, Figure 20A does not include any three-dimensional wavelength conversion component having a dome shape.

As noted, Feit asserts one of ordinary skill in the field would understand "planar shape" to mean "a layer . . . having a uniform thickness" that is "much smaller

[93] *Id.* at col. 18, ll. 14–18.

[94] *Id.* at col. 19, ll. 17–18.

[95] *Id.* at col. 19, ll. 43–46.

[96] *Id.* at col. 24, ll. 27–30.

than its width and length."[97] But the written description's two instances of discussion of "uniform thickness" relate only to the thickness of the relevant layers rather than their overall shape—and the relevant claim language is "planar *shapes*." First, with respect to Figure 2 the written description explains that "diffusing layer 44 comprises a uniform thickness layer of particles of a light diffractive material."[98] Second, the written description explains that "phosphor material and light scattering material . . . are thoroughly mixed in known proportions with the light transmissive binder material" and this "mixture is applied to the face of a substrate as one or more layers of uniform thickness."[99] In short, neither of these descriptions are tied to the relevant claim language, "planar shapes."

Feit, moreover, is unable to provide any citation to intrinsic evidence discussing a thickness that is "much smaller than width and length," let alone any such discussion in the context of a planar shape.[100] Instead, Feit cites to extrinsic evidence, which as discussed above in general is less reliable than the intrinsic evidence and is "unlikely to result in a reliable interpretation of patent claim scope unless considered in the context of the intrinsic evidence."[101]

In its opening brief, Feit actually admits that a planar object is a two-dimensional object.[102] But it does so in the context of characterizing a *cross-section*

---

[97] Doc. 47 at 16–17.

[98] '678 Patent at col. 8, ll. 19–20.

[99] *Id.* at col. 15, ll. 58–65.

[100] Doc. 47 at 15–19; Doc. 53 at 11–13.

[101] *Phillips*, 415 F.3d at 1319.

[102] Doc. 47 at 17 ("two-dimensional (i.e., planar) object").

of a three-dimensional object as somehow indicating that the *object itself* is two-dimensional.[103] To reach this conclusion, the brief relies upon a declaration by Feit's expert, Dr. Schubert, who contends a layer may have "a two-dimensional shape (layer characteristic) as well as a three-dimensional configuration (dome characteristic)."[104] In short, for the reasons discussed above, the specification of the '678 Patent does not support the idea that one component of any embodiment includes both a two-dimensional planar shape and a three-dimensional dome shape.

Feit also relies upon the prosecution history of the '678 Patent, alleging the examiner understood "planar shapes" to cover a three-dimensional dome configuration.[105] Feit points to the examiner's conclusion in an Office Action that U.S. Patent Application Publication No. US2002/0180351A1 (Ex. I to Doc. 47) ("McNulty") "teaches the wavelength conversion layer and the light diffusing layer comprises planar shapes (Figure 2 and [0022]."[106] Feit points out that Figure 2 shows a three-dimensional dome in the form of layer 42, and that McNulty discloses "layer 42 of scattering material is applied on top of the phosphor layer 40":[107]

---

[103] *Id.*

[104] Declaration of E. Fred Schubert, Ph.D, Exhibit C to Doc. 47, at ¶ 51.

[105] Doc. 47 at 17–18; Claim Constr. Hr'g Tr. 58.

[106] Ex. D to Doc. 47 at FEITEL2344.

[107] McNulty at ¶ 22.

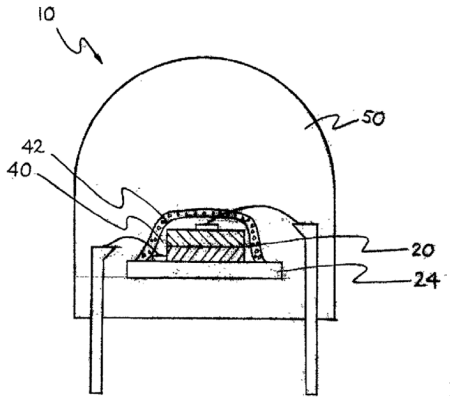

[108]

While the Defendants did not address this argument in their brief, what Feit omits is the fact that McNulty states "[t]he phosphor layer 40 may also contain particles of a scattering material."[109] Notably, McNulty also states that "layer 40 of phosphor material may be applied to the surface of the UV LED 20 from which UV radiation is to emit."[110] And, as shown above, the surface of UV LED 20 in Figure 2 appears to be flat, creating the possibility of layer 40 being applied only as a planar object in the sense of extending primarily in just two dimensions. At any rate, as discussed above, while the prosecution history is sometimes helpful, "it often lacks the clarity of the specification and thus is less useful for claim construction purposes."[111] Such is the case here. As discussed above, the specification of the '678 Patent is particularly clear regarding what is and is not a planar shape.

[108] McNulty at Figure 2.

[109] McNulty at ¶ 22.

[110] *Id.*

[111] *Phillips*, 415 F.3d at 1317.

Finally, Feit argues the Defendants' construction "would inevitably read out the explicitly disclosed embodiment of the term 'planar.'"[112] Feit makes this argument because it believes construing planar to be two dimensional would not cover embodiments that include "a 'planar circular disk' that not only includes a 'diameter', but also includes a 'thickness.'"[113] Feit similarly argues that a construction of "two dimensional" would be "unsuitable for the physical world where all objects have some degree of three-dimensionality" and would "not lend itself to real-world application."[114] Given the specification, however, it is clear that planar shape means *substantially* two-dimensional. The embodiment of a wavelength conversion component described in the written description as planar (and two-dimensional) is *primarily* two-dimensional but of course includes a thickness.[115] Construing "planar shapes" to mean "substantially two-dimensional shapes" covers a two-dimensional object that includes a thickness and is thus suitable for the real physical world.

To the extent Feit is also arguing the Court's construction would somehow read out of the '678 Patent embodiments including three-dimensional objects such as a dome or elongated dome shape, again the Court's construction does not leave other

[112] Doc. 47 at 19.

[113] *Id.*

[114] Doc. 53 at 12, 13.

[115] '678 Patent at Figure 20A.

disclosed embodiments entirely unclaimed.[116] As discussed above, Claim 26 describes that "the light diffusing layer comprises a dome or elongated dome shape."

For these reasons, the Court construes "planar shapes" to mean "substantially two-dimensional shapes."

IV. Conclusion

For the reasons discussed above, the Court construes terms and phrases of the asserted patent as described in this Order and as summarized in the attached chart. In addition, for the reasons discussed above, the Court resolves the parties' disputes regarding the definiteness of the associated claims.

IT IS SO ORDERED this 2nd day of July, 2025.

BRANTLEY STARR
UNITED STATES DISTRICT JUDGE

[116] *See SIMO Holdings*, 983 F.3d at 1379 ("Nor does this case involve a situation in which adopting a narrow construction of the claim at issue leaves other disclosed embodiments entirely unclaimed—though we have hardly treated such a consequence, even when it exists, as overcoming strong textual indicators of a particular claim's narrow meaning."); *Helmsderfer*, 527 F.3d at 1383 ("It is often the case that different claims are directed to and cover different disclosed embodiments. The patentee chooses the language and accordingly the scope of his claims.").

Claim Constructions - '678 Patent

Term or Phrase	Court's Construction
"improves an off-state white appearance of the wavelength conversion component" "improves an OFF state white appearance of the wavelength conversion component" Claims 1, 19, 29	causes an observer to conclude that a wavelength conversion component has more of a white appearance in an off state Not indefinite
"an average particle size that improves the OFF state white appearance of the wavelength conversion component" Claim 21	an average particle size causes an observer to conclude that a wavelength conversion component has more of a white appearance in an off state Not indefinite
"light mixing chamber" Claim 29	an interior volume, separate from the wavelength conversion component, where light mixes
"planar shapes" Claim 25	substantially two-dimensional shapes