March 23, 1965 F. KARDOS 3,175,117

ELECTRIC INCANDESCENT LAMP HAVING A LIGHT-DIFFUSING BULB

Filed Dec. 9, 1959

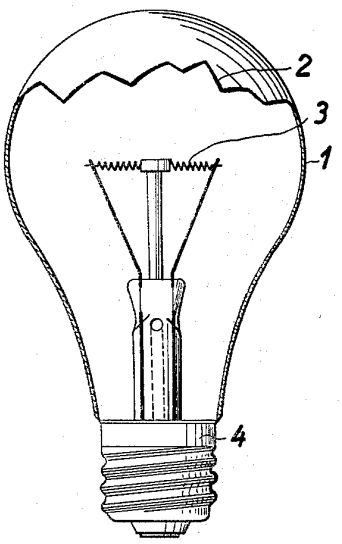

Fig. 1

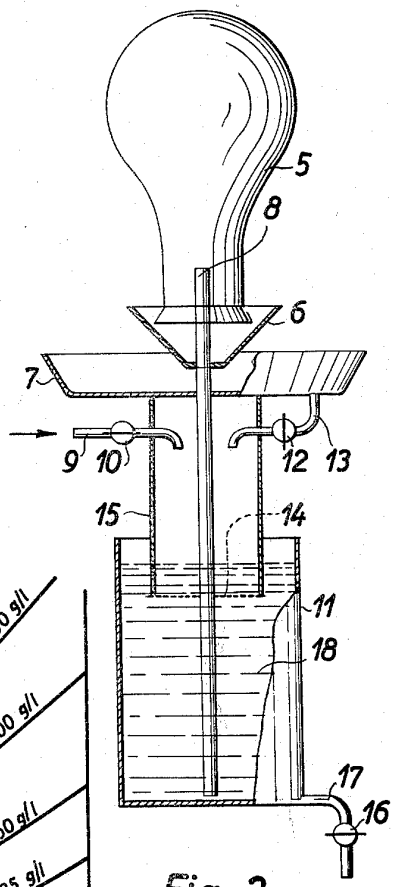

Fig. 3

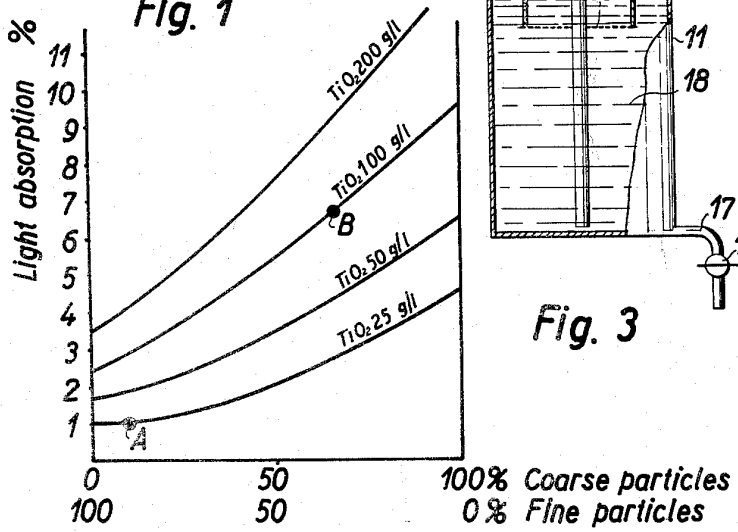

Fig. 2

INVENTOR

Ferenc Kardos

BY Blum, Moscovitz, Friedman & Blum

ATTORNEY

United States Patent Office

3,175,117

Patented Mar. 23, 1965

1

3,175,117
ELECTRIC INCANDESCENT LAMP HAVING A LIGHT-DIFFUSING BULB

Ferenc Kardos, Budapest, Hungary, assignor to Egyesult Izzolampa es Villamossagi Reszvenytarsasag, Budapest, Hungary, a firm

Filed Dec. 9, 1959, Ser. No. 858,508
Claims priority, application Hungary, Dec. 10, 1958, Ee 601
10 Claims. (Cl. 313—116)

This invention relates to electric incandescent lamps, preferably to gas-filled lamps having glass bulbs provided on their interior surface with a superficial light-diffusing coating tightly adhering thereto. This coating is intended to prohibit dazzling caused by the light of high luminiscence (brightness) emitted by the incandescent filament of high operating temperature usual especially in gas-filled lamps containing heavy rare gas, for example krypton.

It is known, for example from the specification of the U.S.A. Patent No. 2,545,896, to provide the bulbs of electric incandescent lamps with an interior superficial light-diffusing coating. Such lamps are similar to those which have bulbs of opal glass.

It is further known to provide lamps with bulbs frosted on their interior surface by chemical or mechanical processes, i.e. by etching respectively sandblasting.

The light-absorption of such frosted bulbs is less than that of those provided with bulbs of opal glass or with the superficial coatings according to the U.S.A. Patent 2,545,-896, and their light causes no dazzling, nevertheless the position of the incandescent filament inside the bulb of these lamps having bulbs of frosted glass is discernible when looking at them and the interior surface of their bulb, being devoid of any coating, has no gettering effect. Furthermore these lamps do not emit such agreeable light as lamps having bulbs of opal glass or opal-like glass, produced, for example, with the method described in the U.S.A. Patent 2,545,896 or other similar methods, and do not possess the ornamental and decorative character of the lamps, having opal glass or opal-like glass bulbs.

It is further known, for example from the specification of the Austrian Patent No. 198.368 of the assignee of the present application, to provide the bulb of the lamp with a superficial interior coating consisting of granules of silicon dioxide of crystalline character. These lamps are much more similar to lamps having bulbs frosted on their interior surface, than to lamps having opal-glass or opal-like glass bulbs, the light absorption of their bulbs is very low and their light does not cause dazzling.

In the specification of the earlier Austrian Patent No. 189.282 of the assignee of the present application it has been disclosed to manufacture lamps with bulbs of opal-like glass. The bulbs of these lamps are provided with a strongly adherent interior coating consisting of titanium dioxide particles and thus having gettering properties, owing also to its being non-porous. These lamps have a very agreeable and diffused light, but in actual practice, the light absorption of their bulbs is rather high, being in the order of about 9–12%.

It is an object of the present invention to provide an electric incandescent lamp, especially a gas-filled lamp, emitting an agreeable, diffused, non-dazzling light and yet having a good luminous efficiency owing to the small light-absorption of its bulb and a more or less decorative character, i.e. uniting the advantages of the two types of known lamps mentioned above.

It is a further object of the invention to provide an electric incandescent lamp having the advantageous properties mentioned above and being able to be manufactured in mass production cheaply, easily and safely, i.e. with no appreciable waste and being able to be thus manufactured

2

in a great variety of kinds adapted to meet special requirements and therefore adapted to be used also for special and not only for general illuminating purposes.

The present invention is based on the discovery that it is possible to provide very advantageous nonporous superficial light-diffusing coatings strongly adhering onto the interior surface of the glass bulbs of electric incandescent lamps, if these coatings consist, contrary to the practice known and used up to now, of two kinds of particles of pigment, instead of the single kind of particles used to this purpose up to now. According to the invention the quantity of the particles of one kind is substantially greater than that of the particles of the other kind, i.e. surpasses the said quantity by at least 50%, but preferably by at least 100% or more, and the grain size of the particles of these two kinds highly differ from each other, i.e. differ from each other by at least one order of magnitude. It is preferable if the granules consistuting the particles of the finer kind are very small, that is to say of a grain size below 0.1μ, preferably in the order of magnitude of the grain size of 0.01μ, which indeed is already almost a colloidal size.

It has to be remarked in this connection, that the interior coating on the bulbs of the lamps manufactured according to the process of the Austrian Patent No. 189.-282 mentioned above, also contain titanium dioxide particles of different size, as this coating has been manufactured by the assignee of the present application from ground titanium dioxide. These particles are however of the same kind, as their grain sizes do not differ from each other highly, i.e. by at least one order of magnitude, but are inside the same order of magnitude. Furthermore the coating of these lamps does not contain very fine particles having a grain size below 0.05μ, in measurable quantities, as such fine particles are not obtained in measurable quantities by the conventional grinding methods used for grinding the titanium dioxide for the purpose of the process of the Austrian Patent No. 189.282. The lamps according to the present invention are therefore different from the lamps manufactured according to the Austrian Patent No. 189.282, in spite of the fact that the interior coating of the lamps according to the present invention is also nonporous and is being manufactured by means of a suspension of pigment granules in a binder, and the manufacturing method is similar in principle to that described in the Austrian Patent 189.282.

The proportion of the quantities of the two kinds of granules respectively particles present in the interior coating of the bulbs of the lamps according to the present invention may be highly different according to the kind of lamps just intended to produce. Thus for example the quantity of the particles of the finer kind, i.e. those with a grain size of about 0.1μ preferably of the order of magnitude of 0.01μ, may be at most 33%, usually much less, of the quantity of the particles of the coarser kind, i.e. having a grain size of the order of magnitude of about $2–4\mu$. In some cases however the quantity of the particles of the finer kind, having for example a grain size between 0.1 and 0.01μ, may surpass the quantity of the particles of the coarser kind by at least one order of magnitude.

The grain sizes of the individual particles of the same kind are, as a rule, not exactly identical with each other, but differ from each other only to a slight extent, i.e. by at most about 5–15%, depending on the manner in which these particles just have been produced.

Chemically, the two kinds of particles may be identical with each other, but may be also different from each other, i.e. the two kinds of particles may consist of the same chemical substance but also of different chemical substances. Thus, for example, the finer particles may consist of fluoccular titanium dioxide, silicon dioxide, or

red iron oxide, while the particles of the coarser kind preferably consist of granules of titanium dioxide not surpassing the grain size of 4μ. The quantity of the particles of red iron dioxide is preferably below 1.5% of the total quantity of the particles, amounting generally only to some tenths of percents of the total quantity of the particles.

In spite of the investigations and experiments made in order to clear the reason of the very advantageous properties of the lamps according to the present invention, it has not been possible as yet to ascertain this reason, and therefore no exact scientific explanation of all of these advantageous properties can be given as yet. Very extended experimental investigations have however proved the very advantageous properties of the lamps according to the invention, beyond any doubt which properties may be seen from the detailed description of the invention given below in connection with the drawing and the examples.

On the drawing:

FIG. 1 shows a side elevational view of a lamp according to the invention with part of the bulb broken away,

FIG. 2 shows a diagram of the light absorption of various coatings,

FIG. 3 is a sketch illustrating the preferred method of manufacturing the lamps according to the invention.

As may be seen on FIG. 1 the lamp shown on this figure is of quite conventional construction, being provided with the glass bulb 1 bearing the light-diffusing non-porous superficial interior coating 2 having also a gettering effect and consisting of particles strongly adhering to each other as well as to the glass surface of the bulb 1. Said bulb, which may be of any desired and appropriate shape, is provided with the conventional socket 3. The lamp shown on this figure has the conventional coiled tungsten filament 3, consuming for example, 60 watts at its rated voltage and contains the conventional filling gas mixture consisting of argon and nitrogen at a pressure of about 700 torr.

Example 1

For the purpose of manufacturing the bulb of the lamp shown on FIG. 1 or of any other similar lamp, it is first necessary to make the suspension from which the interior coating 2 of the bulb has to be produced.

For this purpose 4000 ml. of a solvent consisting of a mixture of acetone, aethyl acetate and aethyl alkohol is prepared and to it there is admixed a quantity of 400 g. of titanium dioxide powder. The proportion of the liquid constituent of the solvent mixture depends on the ambient temperature prevailing during the manufacturing process and may vary within wide limits, even to nil for one or two of the constituents. The said powder consists of the granules of coarser size, with an individual grain size of about 2–4μ. The particles of finer grain size consist also of titanium dioxide in a fine floccular powdery shape, with an individual grain size of about 0.01μ. Such a fine powder may be prepared for example by a hydrolitic decomposition of alkyl titanate. The proportion of the volumes of said two powders, said volumes being obtained by shaking each batch of powder, may be between 4 and 6 and the powder of fine particles is added in a quantity of 200 g. to the solvent mixture. To the same solvent mixture there are further added 400 g. "Collodium 106," which is the trade name of a low-polymerized nitro-cellulose, and finally 200 ml. of dibutyl phalate. The mixture thus obtained is homogenized in a ball mill making 42 revolutions per minute, during a time of 24 to 36 hours. The homogenized suspension thus obtained is now diluted to about 150 to 250% of its original volume by adding to it the necessary quantity of the solvent mixture specified above.

For making a coating on the glass bulb from this suspension, the liquid suspension is led through the pipe 17 provided with the stopcock 16 into the container 11. This

container is airtightly closed and provided with the inlet tube 9 provided with the valve 10, by means of which compressed air may be blown into the container at a pressure of about 0.4 kg./cm.^{2}. This is done by quickly opening the valve 10 for a short time so that the air pressure surge thereby set up in the container 11 causes the liquid 18 to be blown through the jet 8 into the glass bulb 5 held in its position shown on the drawing by any suitable means (not shown). The excess liquid, not adhering to the inside wall surface of the bulb 5 flows into the funnel 6 from which it drains into the pan 7, from where it is led back to the container 11 by means of opening the valve 12 of the pipe 13, when said container is not subjected to the pressure of the air blown into it, i.e. when the valve 10 is shut. The wire gauze sieve 14 provided in the cylindrical sleeve 15 of the container 11 ensures that only filtered and thus pure suspension 18 can be injected into the bulb 5 through the jet 8 which has a nozzle of a diameter of about 4–6 mm. The valves 10 and 11 are preferably interconnected with each other mechanically in a manner to ensure that valve 10 can be only opened when valve 12 is shut and vice versa.

The bulb 5 thus provided with a liquid layer of suspension adhering to its inner surface is allowed to dry, and thereafter put on an endless band running with a speed of about 1 m./minute and acting as a conveyor. By means of this band the bulbs are transported to an electrically heated or gas-heated oven, through which they pass still on the same band in a time averaging about 4.5 to 6 minutes. This tunnel-like oven has a heating zone, the length of which amounts to about ⅗ of its total length, the rest of about ⅖ being constituted by the annealing zone. In the middle of the heating zone the bulbs already reach their maximum temperature of about 400 to 450° C., whereby the suspension is burned out and a firmly adhering surface layer is thus produced on the inside of the bulbs, which are now ready for being conveyed to the conventional automatic machine manufacturing the lamps. The coating thus produced on the bulbs is non-porous, being constituted by a tight conglomeration of titanium dioxide particles packed tightly together and adhering strongly to each other as well as to the bulb. This coating shows a marked gettering effect in the lamp and has a light absorption of about 6 to 8%. The burning filament of the lamp remains invisible in spite of this small absorption of light, and the lamp has the decorative character of lamps provided with bulbs made of opal glass, in spite of the fact, that the bulbs must not consist of any special expensive glass, but may consist of the glass generally used for manufacturing the bulbs of incandescent lamps, for example the conventional magnesia glass. The very soothing and agreeable light of the lamp is probably due to the quite special optical properties of the coating consisting of titanium dioxide particles of two different kinds, the light emitted by the lamps showing somewhat different proportions of the intensities of its individual different wavelengths than those present in the light of the lamp devoid of the coating according to the invention.

Example 2

The procedure to be followed in order to manufacture a lamp having a bulb similar to an opal-glass bulb, but emitting a slightly rose-coloured, very agreeable light, is substantially that described in Example 1. The only difference consists in the constitution of the suspension injected into the lamp bulb, as in this case the suspension is prepared by adding to the liquid mixture, instead of the 400 resp., 200 g. titanium dioxide powders specified in Example 1, only 150 g. of titanium dioxide particles of a granule size of about 0.01μ and 0.5 g. of red iron oxide granules of a granule size of about 0.1μ produced by precipitation. The light absorption of the bulb of this lamp amounts to about 5–7%.

Example 3

The procedure to be followed in order to produce a lamp having a bulb similar to a bulb slightly frosted on its inside, i.e. emitting a light which does not dazzle in spite of the fact that the position of the incandescent filament inside the bulb may be seen from its outside, is again substantially the one already described in Example 1, but again a different suspension has to be used. This suspension is prepared by using the two kinds of particles specified in Example 1 in different quantities, i.e. by adding to the liquid mixture, instead of the 400 g. of coarser granules of titanium dioxide only a quantity ranging between 0.2 and 20 g. of these granules, and 200 g. of the fine granules. The drying of the liquid film of this suspension adhering to the inner surface of the bulbs is, before putting them on the running band, effected in a special manner, by means of a current of air blown into them. This current of air has ambient room temperature of about 20° C., but is saturated with water vapor. This current of air is produced by blowing filtered air into a closed container, containing water, by means of a jet having its open end above the liquid level on one end of the container, from which the air is led away and blown into the bulb by means of a pipe, the end of which is also situated above the water level of the container, but distanced from the above mentioned jet, for example situated at the other end of the container. This current of drying air is blown into the bulb in the conventional manner, by means of a nozzle ending inside the bulb. The light absorption of the bulbs thus produced amounts only to 0.5–1.5%, and no dazzling effect on their light can be observed.

Example 4

In order to produce a lamp having a bulb similar to those which consist of opal glass, a suspension is first produced in the following manner.

To 4000 ml. of a solvent mixture specified in Example 1 400 g. of nitrocellulose and, as a softening agent, 400 ml. of benzyl-alcohol are added and, as a pigment, 150 g. of titanium dioxide powder with a grain size of about 0.01μ, i.e. the fine granules specified in Example 1.

The mixture thus obtained is further treated in the manner specified in Example 1 and the bulbs are provided with a coating made with this suspension also according to Example 1.

On this coating, however, after its having been burned out, a second coating is applied, containing the particles of the other, coarser kind. For this purpose a suspension is produced from 4000 ml. of a solvent or solvent mixture, preferably identical with that mentioned above, 50 g. "Collodium 180" (trade name of a highly polymerized nitrocellulose having a viscosity surpassing that of the kinds known under the trade name "Collodium 106" and "Collodium 124"), 25 ml. dibutyl phthalate and 400 g. titanium dioxide powder of a granule size of between 2 and 4μ. This mixture is treated according to Example 1, and by means of the same a further layer is provided on the first coating mentioned above, also in the manner specified in Example 1. These two layers are completely united with each other to a unitary coating on occasion of the burning out of the second layer, effected also in the manner specified in Example 1. The light absorption of the bulb of this lamp amounts to about 5–6%, in spite of the fact, that the bulb looks like an opal glass bulb.

Example 5

In order to produce a lamp having a bulb similar to that made of opal-glass and frosted on its inside, first of all a suspension is prepared in the following manner.

To 4000 ml. of a solvent or solvent mixture specified in Example 1, 150 g. of "Collodium 124" (trade name of a low-polymerized nitrocellulose, having a viscosity between those of the trade name "Collodium 106" and "Collodium 180"), and, as a softening agent, 60 ml. dibutyl phthalate, and 800 g. of titanium dioxide in the shape of granules of a size between 2 and 4μ, and finally 300 ml. "aethylsilicat 40" (trade name of a liquid organic silicon compound), are added. From this quantity of 300 ml. a quantity of about 120 g. of fine granules of silicon dioxide are formed, with a grain size of between about 2–4μ, on occasion of the burning out of the coating.

The liquid mixture thus obtained is treated further according to Example 1 and the lamp bulbs are produced with it also in the manner specified in Eaxmple 1.

The light absorption of the bulbs of these lamps amounts to about 10–11%. Owing to the very uniform distribution of their light these lamps are adapted to be used in photographical enlarging apparatus, where it is essential that the bulbs should emit a light having about the same luminance (brightness) on any part of the bulbs.

Example 6

In order to make bulbs especially adapted for gas filled lamps of higher wattage of about above 200 watt, and are similar to bulbs consisting of opal-glass, first of all a suspension is prepared in the following manner.

To 4000 ml. of a solvent mixture specified in Example 1 there are added 150 g. polyvinyl acetate of the trade name "Movilith 30," and, as a softening agent, 100 ml. of dibutyl phthalate and, as the coarse kind of pigment particles, 450 g. of titanium dioxide granules having a granule size of between 2 and 4μ, and, as the particles of the finer kind, 150 g. of titanium dioxide particles of a grain size of about 0.01μ, both of these kinds of pigment particles being those specified in Example 1.

The further treatment of this liquid mixture and the manufacture of the bulbs is effected according to Example 1 and the light absorption of the bulbs amounts to about 7–8%.

Example 7

In order to produce a special kind of bulbs, constituting to a certain extent something like between bulbs made of clear glass, but frosten on their inside and bulbs similar to opal-glass bulbs, but having only a light absorption of about 2–3%, first of all a suspension is prepared in the following manner.

To 4000 ml. of a solvent or solvent mixture, as specified in Example 1, there are added 50 g. of "Collodium 180," further as a softening agent, 25 ml. of dibutyl phthalate, further, as the fine pigment particles, 200 g. of titanium dioxide with a grain size of about 0.01μ, as specified in Example 1, and finally, for obtaining the pigment particles of the coarser kind, 100 ml. of tetraisopropyl titanate. From this compound a quantity of about 30–35 g. of titanium dioxide granules are formed on occasion of the burning out of the layer, with a grain size of about 1μ.

With the liquid mixture thus obtained, which is further treated according to Example 1, the bulbs are produced according to Example 1.

FIG. 2 of the drawing shows in a diagram the light absorption of a bulb provided with a coating according to the invention, for coatings containing different quantities of pigment and different proportions of the coarse and fine granules of pigment. On the abscissa of this diagram the compositions of the pigment mixture are plotted, in the manner customary in the art, the composition on the left edge of the diagram thus consisting only of fine particles, and the composition on the right-hand edge only of coarse particles. The grain size of the coarse particles and the grain size of the fine particles to about 0.01μ amounts to about 2 to 4μv. The ordinate of this diagram shows the light absorption of the bulb absorption of the bulb plotted in percents. Both kinds of particles consist of titanium dioxide and on each curve there is indicated the total quantity of titanium di-

oxide contained in a litre of suspension, these quantities ranging from the 200 g./l. of the topmost curve, to the 25 g./l. of the lowermost curve. The point "A" of this curve corresponds about to a bulb having a coating according to Example 3, and the point "B" of the second curve from the top to a bulb having a coating according to Example 1. The suspensions of this diagram have all been prepared with "Collodium 106," in order to enable exact comparison.

As may be seen from the diagram of FIG. 2 and from all the examples it is preferable to use coatings in which there is a substantial difference between the quantities of the two kinds of particles contained in the coating. According to the invention the proportions of weight of the two kinds of particles amounts at least to 2:1, that is to say 2/3:1/3, when this relation is taken for the total quantity of the particles. This relation however is preferably higher amounting for example to 4:1, 9:1 or even 19:1 or more. The examples further show that in some cases the particles of the coarser kind are present in an overwhelming majority and in other cases the particles of the finer kind.

The examples also show, together with the diagram of FIG. 2 and the whole contents of the present specification, that the lamps according to the invention may be manufactured in very different qualities, i.e. with bulbs having very different qualities and adapted to meet almost any requirement. Therefore the invention is by no means limited to the examples given above, nor to specific shapes of bulbs, as for example globular or candle-like bulbs may also easily be manufactured, and may be provided with any suitable filament and/or filling gas or gas mixture at any suitable pressure. Therefore, everything what has been said above in connection with the examples and the drawing, has to be taken only as illustrative, and not in a limiting sense. It has also to be understood that the coating layers present on the inside surface of the bulb of the lamps according to the invention, being non-porous and containing particles tightly packed together and strongly adhering to each other and to the inside wall surface of said bulb, are adapted to prevent the dislodgment of any impurities from the inside surface of said bulb, thus preventing premature burning out of the lamp owing to alkali-metal containing impurities reaching the burning filament and thus causing arc flashing on occasion of their contacting with the same. The gettering effect of the coating layers provided according to the invention is due to the chemical composition of the particles contained in them, and is especially marked in gas-filled lamps comprising a rare gas, such as argon, krypton and/or xenon in its conventional mixture of filling gas, in case of coating layers containing only or in an overwhelming majority pigment particles consisting of titanium dioxide, produced by grinding or coarse titanium dioxide or by decomposition of a titanium compound.

What I claim is:

1. An electric incandescent lamp comprising a sealed glass bulb having a tungsten filament mounted therein and having its inside surface coated with a burnt-on, non-porous, continuous light-diffusing layer consisting essentially of grain sizes below 5 microns firmly adhering to each other and to said bulb, said coating layer preventing dislodgment of any impurities from the inside surface of said bulb, said layer comprising two kinds of particles differing from each other in their grain size by at least one order of magnitude, one of said kinds of particles being present in an amount of about 2–19 times the amount of the other of said kinds of particles, the grain size of the particles in each of said kinds of particles differing from each other in size by not more than about 15%, titanium dioxide, whereby said coating layer has a gettering effect due to the presence of the said titanium dioxide particles and the lamp is characterized by emission of an agreeable, diffused, non-dazzling light while yet light absorption by the said coating is low.

2. A lamp as claimed in claim 1 and having a coating layer containing, as particles of the one kind, pigment particles of a grain size below 0.1 micron in a quantity amounting at most to one-third of the total quantity of the pigment particles present in said coating layer.

3. A lamp as claimed in claim 1 and having a coating layer containing, as particles of the one kind, pigment particles of a grain size of the order of magnitude of 0.01 micron in a quantity amounting to less than one-third of the total quantity of the pigment particles present in said coating layer.

4. A lamp as claimed in claim 1 and having a coating layer containing, as particles of the one kind, pigment particles of a grain size ranging between 0.1 and 0.01 micron in a quantity exceeding the quantity of the particles of the other kind, having a grain size exceeding 1 micron, by at least one order of magnitude.

5. A lamp as claimed in claim 1, and having a bulb containing a coiled tungsten filament and filled with a gas mixture comprising rare gas.

6. An electric incandescent lamp comprising a sealed glass tube having a tungsten filament mounted therein and having its inside surface coated with a burnt-on, non-porous continuous light diffusing layer consisting essentially of grain sizes below 5 microns firmly adhering to each other and to said bulb, said coating layer preventing dislodgment of any impurities on the inside surface of said bulb, said layer comprising two kinds of particles differing from each other in their grain sizes by at least one order of magnitude, said kinds of particles being present in said coating layer in quantities substantially differing from each other, the particles of one kind consisting of floccular titanium dioxide of a grain size below 0.1 micron and the particles of the other kind consisting of titanium dioxide granules having a grain size ranging from about 1 to 4 microns, one of said kinds of particles being present in an amount of about 2–19 times the amount of the other of said kinds of particles, the grain size of the particles in each of said kinds of particles differing from each other in size by not more than about 15%, whereby said coating layer has a gettering effect due to the presence of said titanium dioxide particles and the lamp is characterized by emission of an agreeable, diffused, non-dazzling light while yet light absorption by said coating is low.

7. An electric incandescent lamp comprising a sealed glass bulb having a tungsten filament mounted therein and having its inside surface coated with a burnt-on, non-porous, continuous light-diffusing layer consisting essentially of grain sizes below 5 microns firmly adhering to each other and to said bulb, said coating layer presenting dislodgement of any impurities from the inside surface of said bulb, said layer comprising two kinds of particles differing from each other in their grain size by at least one order of magnitude, one of said kinds of particles being present in an amount of about 2–19 times the amount of the other of said kinds of particles, the grain size of the particles in each of said kinds of particles differing from each other in size by not more than about 15%, said coating layer containing pigment particles of different chemical composition, the pigment particles of the coarser kind consisting of titanium dioxide, and the pigment particles of the finer kind consisting of silicon dioxide, whereby said coating layer has a gettering effect and the lamp is characterized by emission of an agreeable, diffused, non-dazzling light while yet light absorption by the said coating is low.

8. An electric incandescent lamp comprising a sealed glass bulb having a tungsten filament mounted therein and having its inside surface coated with a burnt-on, non-porous, continuous light-diffusing layer consisting essentially of grain sizes below 5 microns firmly adhering to each other and to said bulb, said coating layer presenting dislodgement of any impurities from the inside surface of said bulb, said layer comprising two kinds of particles

differing from each other in their grain size by at least one order of magnitude, one of said kinds of particles being present in an amount of about 2–19 times the amount of the other of said kinds of particles, the grain size of the particles in each of said kinds of particles differing from each other in size by not more than about 15%, said coating layer containing pigment particles of different chemical composition, the pigment particles of the coarser kind consisting of titanium dioxide, and the pigment particles of the finer kind consisting of red iron oxide, whereby said coating layer has a gettering effect and the lamp is characterized by emission of an agreeable, diffused, non-dazzling light while yet light absorption by the said coating is low.

9. An electric incandescent lamp comprising a sealed glass bulb having a tungsten filament mounted therein and having its inside surface coated with a burnt-on, nonporous, continuous light-diffusing layer consisting essentially of grain sizes below 5 microns firmly adhering to each other and to said bulb, said coating layer presenting dislodgement of any impurities from the inside surface of said bulb, said layer comprising two kinds of particles differing from each other in their grain size by at least one order of magnitude, one of said kinds of particles being present in an amount of about 2–19 times the amount of the other of said kinds of particles, the grain size of the particles in each of said kinds of particles differing from each other in size by not more than about 15%, said coating layer containing titanium dioxide particles of the coarser kind and red iron oxide particles of the finer kind, the quantity of said red iron oxide particles amounting at most to 1.5% of the total quantity of the pigment particles present in said coating layer, whereby said coating layer has a gettering effect and the lamp is characterized by emission of an agreeable, diffused, non-dazzling light while yet light absorption by the said coating is low.

10. An electric incandescent lamp comprising a sealed glass bulb having a tungsten filament mounted therein and having its inside surface coated with a burnt-on, nonporous, continuous light-diffusing layer consisting essentially of grain sizes below 5 microns firmly adhering to each other and to said bulb, said coating layer preventing dislodgement of any impurities from the inside surface of said bulb, said layer comprising two kinds of particles differing from each other in their grain size by at least one order of magnitude, one of said kinds of particles being present in an amount of about 2–19 times the amount of the other of said kinds of particles, the grain size of the particles in each of said kinds of particles differing from each other in size by not more than about 15%, at least the kind of particles present in a quantity amounting to a multiple of the quantity of the other kind consisting of titanium dioxide, whereby said coating layer has a gettering effect due to the presence of said titanium dioxide particles and the lamp is characterized by emission of an agreeable, diffused, non-dazzling light while yet light absorption by the said coating is low.

References Cited by the Examiner

UNITED STATES PATENTS

2,545,896	3/51	Pipkin	313—116
2,661,438	12/53	Shand	313—116
2,806,968	9/57	Thorington	313—116 X
2,859,369	11/58	Williams et al.	313—116
2,922,065	1/60	Meister	313—116
2,963,611	12/60	Meister et al.	313—116

GEORGE N. WESTBY, *Primary Examiner.*

ARTHUR GAUSS, RALPH G. NILSON, DAVID J. GALVIN, *Examiners.*