US008104908B2

(12) **United States Patent**
Harbers et al.

(10) **Patent No.: US 8,104,908 B2**
(45) **Date of Patent: Jan. 31, 2012**

(54) **EFFICIENT LED-BASED ILLUMINATION MODULE WITH HIGH COLOR RENDERING INDEX**

(75) Inventors: **Gerard Harbers**, Sunnyvale, CA (US); **Raghuram L. V. Petluri**, Sunnyvale, CA (US)

(73) Assignee: **Xicato, Inc.**, San Jose, CA (US)

(*) Notice: Subject to any disclaimer, the term of this patent is extended or adjusted under 35 U.S.C. 154(b) by 204 days.

(21) Appl. No.: **12/717,880**

(22) Filed: **Mar. 4, 2010**

(65) **Prior Publication Data**

US 2011/0216522 A1 Sep. 8, 2011

(51) **Int. Cl.**
F21V 33/00 (2006.01)

(52) **U.S. Cl.** **362/84**; 362/800

(58) **Field of Classification Search** 362/84, 362/800

See application file for complete search history.

(56) **References Cited**

U.S. PATENT DOCUMENTS

3,593,055	A	7/1971	Geucic et al.
5,959,316	A	9/1999	Lowery
5,962,971	A	10/1999	Chen
5,966,393	A	10/1999	Hide et al.
5,982,092	A	11/1999	Chen
5,998,925	A	12/1999	Shimizu et al.
6,066,861	A	5/2000	Hohn et al.
6,068,383	A	5/2000	Robertson et al.
6,220,725	B1	4/2001	Arnold
6,234,648	B1	5/2001	Borner et al.
6,252,254	B1	6/2001	Soules et al.
6,255,670	B1	7/2001	Srivastava et al.
6,340,824	B1	1/2002	Komoto et al.
6,351,069	B1	2/2002	Lowery et al.
6,469,322	B1	10/2002	Srivastava et al.
6,504,301	B1	1/2003	Lowery
6,576,930	B2	6/2003	Reeh et al.

(Continued)

FOREIGN PATENT DOCUMENTS

DE 10 2007 03787 A1 2/2009

(Continued)

OTHER PUBLICATIONS

Machine Translation of Abstract for DE 10 2007 037875 in English, from the European Patent Office at http://translationportal.epo.org/emtp/translate/?TREN=en%3Agoogle&SRCLANG=de&UID=Ad102007037875xAlxDExops.epo.org, visited on Jun. 13, 2011, 1 page.

(Continued)

Primary Examiner — Laura Tso

(74) *Attorney, Agent, or Firm* — Silicon Valley Patent Group LLP

(57) **ABSTRACT**

An illumination module includes a light mixing cavity with an interior surface area and window that are physically separated from an LED. A portion of the window is coated with a first wavelength converting material and a portion of the interior surface area is coated with a second wavelength converting material. The window may be coated with LuAG:Ce. The window may also be coated with a third wavelength converting material with a peak emission wavelength between 615-655 nm where the spectral response of light emitted from the window is within 20% of a blackbody radiator at the same CCT. The LED may emit a light that is converted by the light mixing cavity with a color conversion efficiency ratio greater than 130 lm/W where the light mixing cavity includes two photo-luminescent materials with a peak emission wavelengths between 508-528 nm and 615-655 nm.

20 Claims, 8 Drawing Sheets

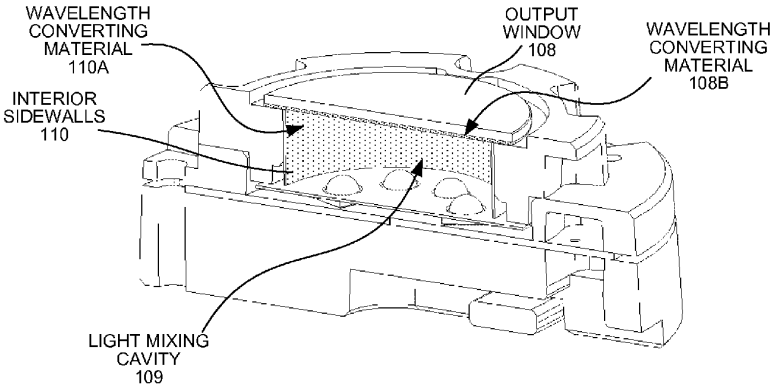

U.S. PATENT DOCUMENTS

6,586,882	B1	7/2003	Harbers	
6,600,175	B1	7/2003	Baretz et al.	
6,621,211	B1	9/2003	Srivastava et al.	
6,649,946	B2	11/2003	Bogner et al.	
6,680,569	B2	1/2004	Mueller-Mach et al.	
6,724,142	B2	4/2004	Ellens et al.	
6,765,237	B1	7/2004	Doxsee et al.	
6,791,259	B1	9/2004	Stokes et al.	
6,850,002	B2	2/2005	Danielson et al.	
7,250,715	B2	7/2007	Mueller et al.	
7,453,195	B2	11/2008	Radkov	
7,479,662	B2	1/2009	Soules et al.	
7,494,246	B2	2/2009	Harbers	
7,534,002	B2	5/2009	Yamaguchi et al.	
7,564,180	B2	7/2009	Brandes	
7,614,759	B2	11/2009	Negley	
7,906,790	B2	3/2011	Radkov et al.	
2002/0043926	A1	4/2002	Takahashi et al.	
2004/0041220	A1*	3/2004	Kwak et al.	257/432
2005/0057145	A1	3/2005	Shieh et al.	
2006/0087487	A1	4/2006	Ota	
2007/0235751	A1	10/2007	Radkov et al.	
2007/0241657	A1	10/2007	Radkov et al.	
2007/0263393	A1	11/2007	Van De Ven	
2008/0142816	A1	6/2008	Bierhuizen et al.	
2008/0315228	A1	12/2008	Krames et al.	
2009/0103293	A1	4/2009	Harbers et al.	
2009/0103296	A1	4/2009	Harbers et al.	

FOREIGN PATENT DOCUMENTS

EP	0 890 996		1/1999
WO	WO 2009/093163	A2	7/2009
WO	WO 2009/107052	A1	9/2009

OTHER PUBLICATIONS

International Search Report and Written Opinion for International Application No. PCT/US2011/024395 mailed on Apr. 24, 2011, 13 pages.

* cited by examiner

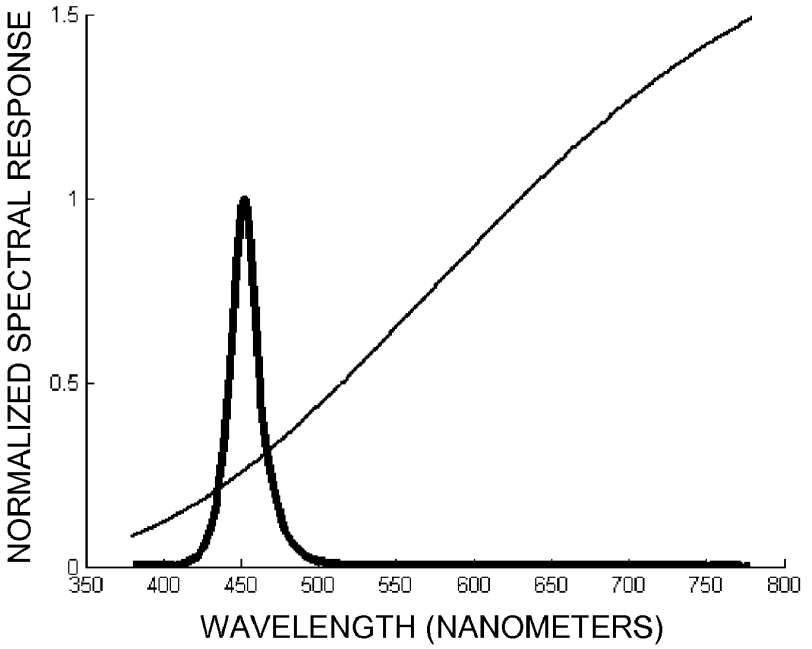
NORMALIZED SPECTRAL RESPONSE
1.5
1
0.5
0
350
400
450
500
550
600
650
700
750
800
WAVELENGTH (NANOMETERS)

FIG. 1

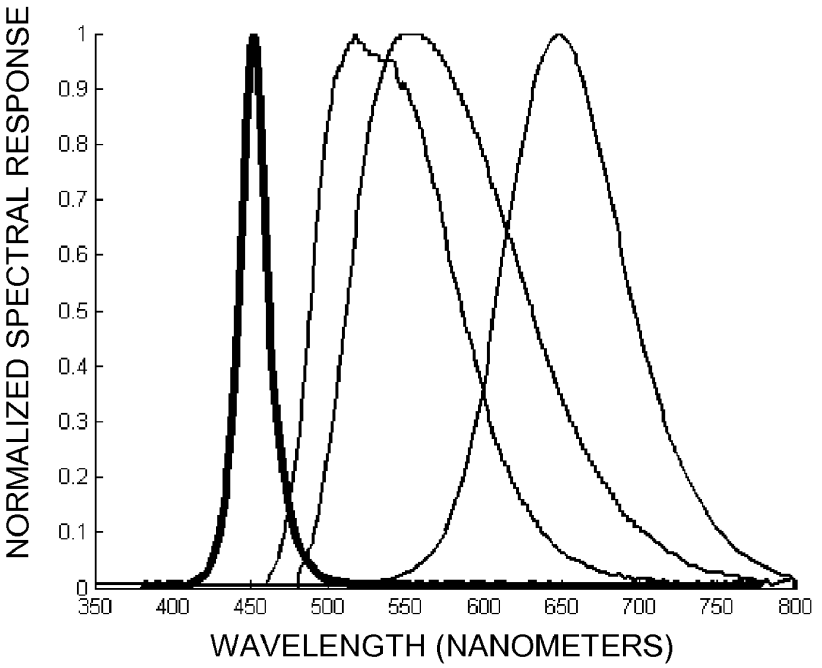
NORMALIZED SPECTRAL RESPONSE
1
0.9
0.8
0.7
0.6
0.5
0.4
0.3
0.2
0.1
0
350
400
450
500
550
600
650
700
750
800
WAVELENGTH (NANOMETERS)

FIG. 2

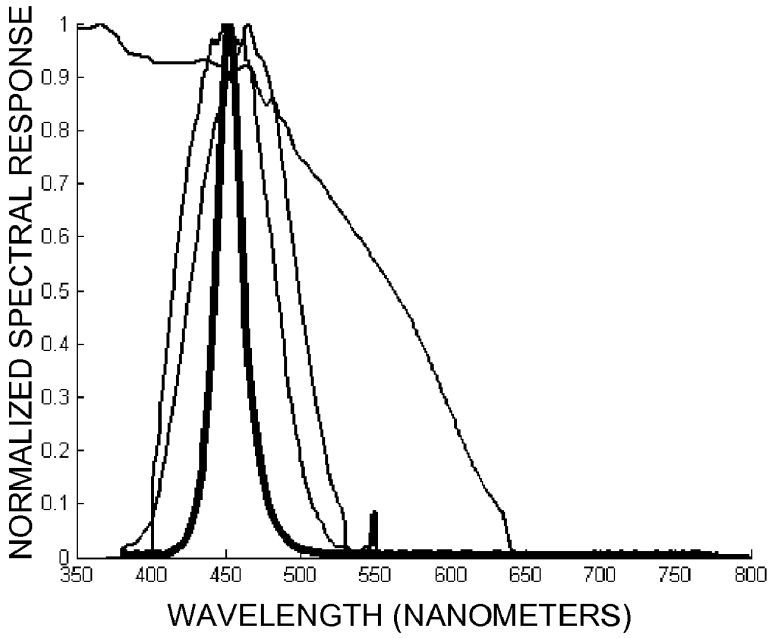
NORMALIZED SPECTRAL RESPONSE
1
0.9
0.8
0.7
0.6
0.5
0.4
0.3
0.2
0.1
0
350
400
450
500
550
600
650
700
750
800
WAVELENGTH (NANOMETERS)

FIG. 3

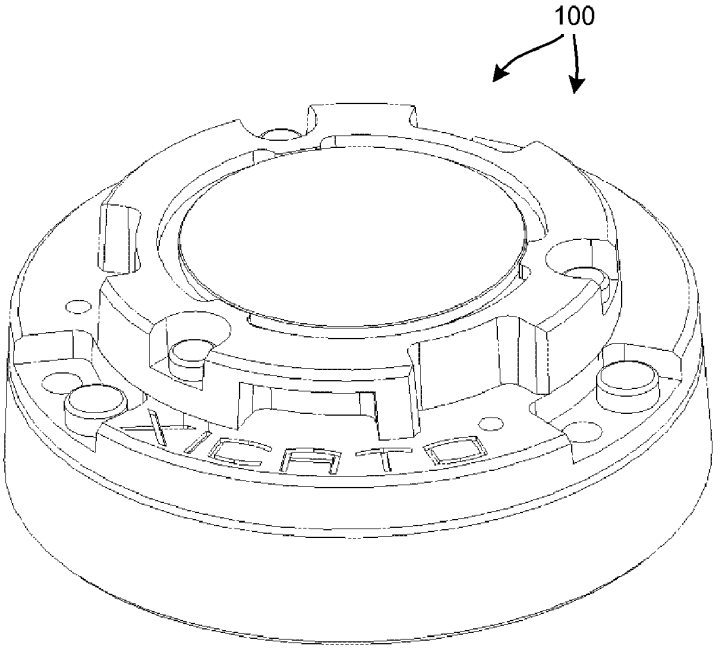
100

FIG. 4

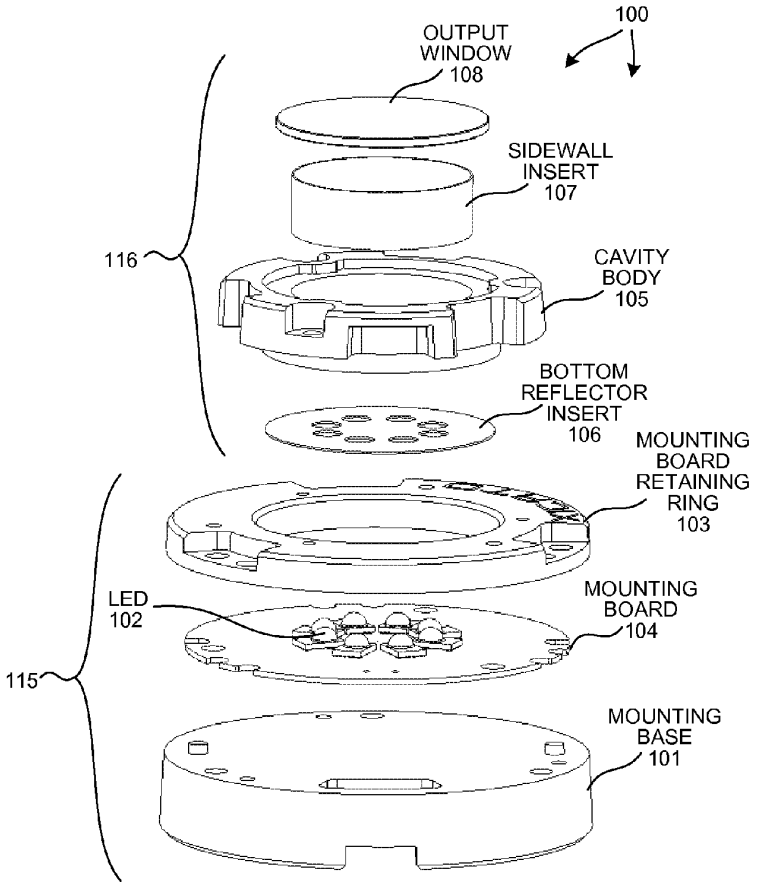
100
OUTPUT WINDOW 108
SIDEWALL INSERT 107
116
CAVITY BODY 105
BOTTOM REFLECTOR INSERT 106
MOUNTING BOARD RETAINING RING 103
LED 102
MOUNTING BOARD 104
115
MOUNTING BASE 101

FIG. 5

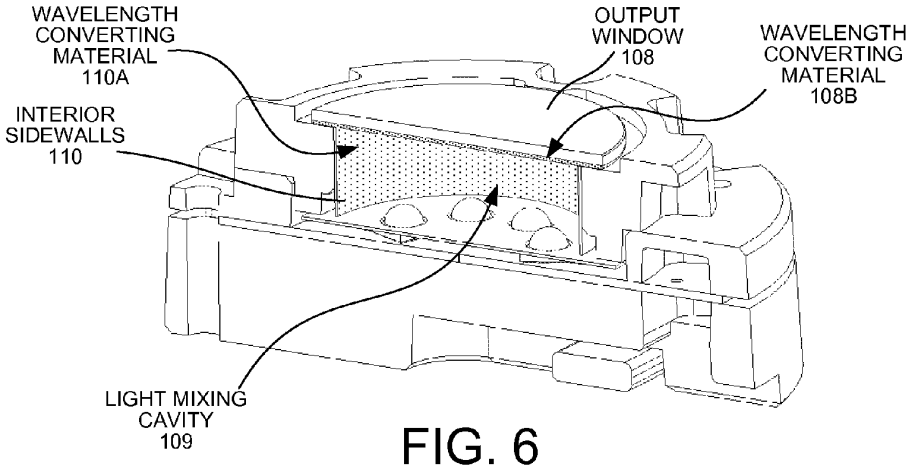
WAVELENGTH CONVERTING MATERIAL 110A
OUTPUT WINDOW 108
WAVELENGTH CONVERTING MATERIAL 108B
INTERIOR SIDEWALLS 110
LIGHT MIXING CAVITY 109

FIG. 6

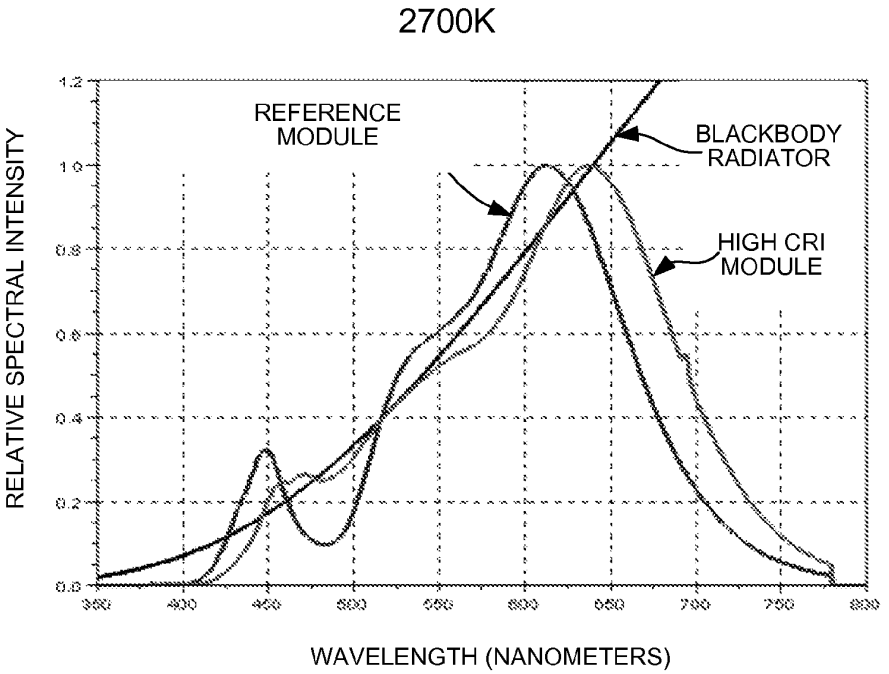

FIG. 7A

	REFERENCE MODULE	HIGH CRI MODULE
RA	84	97
R1	85	96
R2	89	98
R3	91	98
R4	86	96
R5	83	96
R6	85	95
R7	88	98
R8	69	98
R9	27	97
R10	72	97
R11	85	94
R12	66	90
R13	85	96
R14	94	98
R15	79	98

FIG. 7B

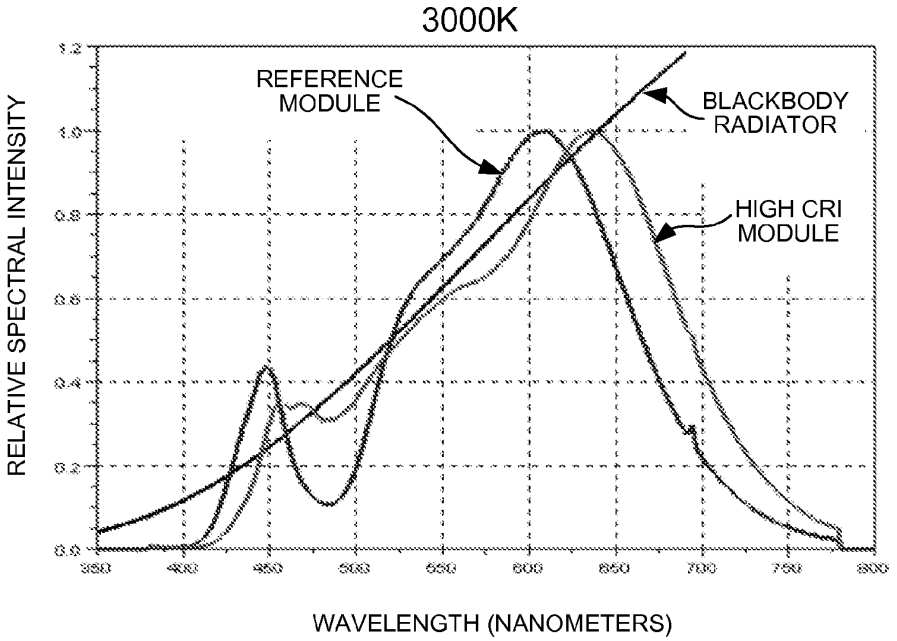

FIG. 8A

	REFERENCE MODULE	HIGH CRI MODULE
RA	81	98
R1	80	98
R2	85	99
R3	89	98
R4	81	98
R5	78	98
R6	80	97
R7	86	98
R8	66	98
R9	16	98
R10	64	99
R11	79	98
R12	58	88
R13	81	98
R14	93	98
R15	75	98

FIG. 8B

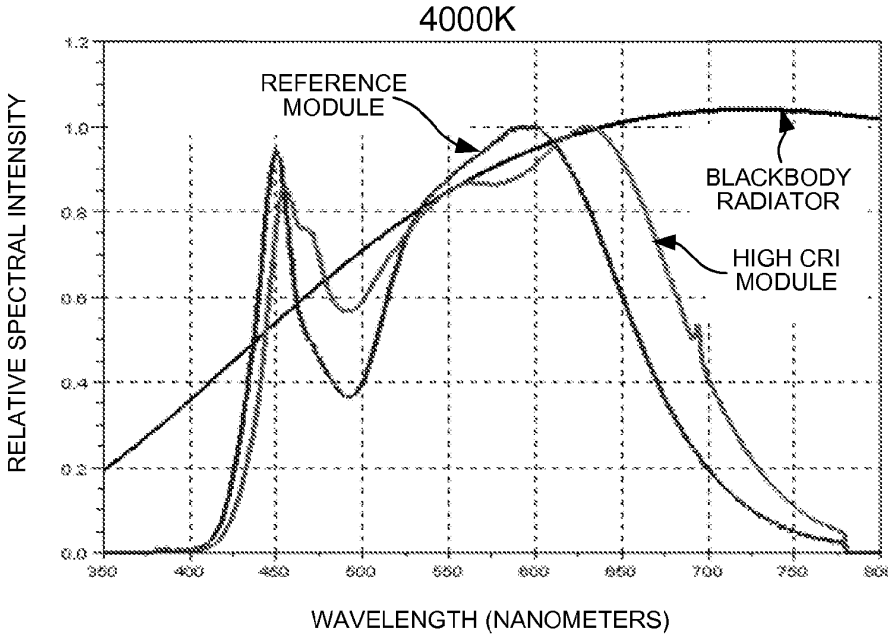

FIG. 9A

	REFERENCE MODULE	HIGH CRI MODULE
RA	84	97
R1	83	98
R2	89	99
R3	92	99
R4	83	94
R5	82	96
R6	83	97
R7	89	95
R8	70	95
R9	22	90
R10	71	99
R11	79	95
R12	63	78
R13	84	99
R14	95	99
R15	79	96

FIG. 9B

MAXIMUM PERCENTAGE DEVIATION OF MEASURED SPECTRA FROM BLACKBODY CURVE

WAVELENGTH RANGES [NM]	2700K REF MODULE	2700K HIGH CRI MODULE	3000K REF MODULE	3000K HIGH CRI MODULE	4000K REF MODULE	4000K HIGH CRI MODULE
450-475	73	41	65	60	63	44
475-500	67	9	66	18	69	20
500-525	48	5	49	**9**	57	18
525-550	13	2	16	1	5	7
550-575	7	10	14	8	5	6
575-600	14	12	16	10	6	7
600-625	15	8	14	7	15	5
625-650	36	14	39	**12**	43	9
650-675	65	41	66	39	66	34
675-700	82	67	83	64	81	59
700-725	92	84	91	82	90	78
725-750	96	92	96	91	95	89

FIG. 10

	3 PHOSPHOR CAVITY		2 PHOSPHOR CAVITY	
TARGET CCT	FLUX OUTPUT (LUMENS)	LUMENS/W RATIO	FLUX OUTPUT (LUMENS)	LUMENS/W RATIO
3000K	1290	141	1216	136
4000K	1413	158	1303	146

FIG. 11

		RED 618 CAVITY	
	TARGET CCT	FLUX OUTPUT (LUMENS)	LUMENS/W RATIO
10 LED BOARD	3000K	1290	141
	4000K	1413	158
7 LED BOARD	3000K	923	147
	4000K	1005	160
4 LED BOARD	3000K	553	154
	4000K	555	155

FIG. 12A

		RED 630 CAVITY	
	TARGET CCT	FLUX OUTPUT (LUMENS)	LUMENS/W RATIO
10 LED BOARD	3000K	1255	140
	4000K	1372	153
7 LED BOARD	3000K	849	135
	4000K	965	154
4 LED BOARD	3000K	478	134
	4000K	508	142

FIG. 12B

EFFICIENT LED-BASED ILLUMINATION MODULE WITH HIGH COLOR RENDERING INDEX

TECHNICAL FIELD

The described embodiments relate to illumination modules that include Light Emitting Diodes (LEDs).

BACKGROUND INFORMATION

Color rendering index (CRI) is a quantitative measure of the ability of a light source to reproduce the colors of various objects faithfully in comparison with an ideal or natural light source. The CRI system is administered by the International Commission on Illumination (CIE). The CIE selected fifteen test color samples to grade the color properties of a white light source. The first eight test color samples are relatively low saturated colors and are evenly distributed over the complete range of hues. These eight samples are employed to calculate the general color rendering index R_a. The general color rendering index R_a is simply calculated as the average of the first eight color rendering index values, R_1-R_8. An additional seven samples provide supplementary information about the color rendering properties of the light source; the first four focus on high saturation, and the last three are representative of well-known objects.

A set of color rendering index values, R1-R15, can be calculated for a particular correlated color temperature (CCT) by comparing the spectral response of a light source against that of each test color sample, respectively. The calculation consists of taking the differences ΔEj, between the spectral power distribution of a test color sample and the spectral power distribution of the light source under test at any number of equally spaced wavelengths over the range of wavelengths under test. Based on these differences, each specific color rendering index value is calculated as follows:

$$R_i = \sum_{j=1}^{N} \frac{100 - 4.6\Delta E_j}{N} \quad (1)$$

The test color samples associated with the various CRI indices are designed such that certain ideal or natural light sources should achieve a CRI value of 100 for each index. For example, below 5,000 Kelvin, the blackbody radiator is taken as the ideal light source. Thus, a blackbody radiator below 5,000 Kelvin has a CRI of 100 for each specific CRI value. Incandescent lamps have a CRI rating approaching 100 as they can be constructed to be a very close approximation of a blackbody radiator. Light sources of limited spectral power distribution, such as arc lamps or light emitting diodes (LEDs) typically exhibit very low CRI values. In general, illumination sources achieving high CRI values are desirable as they offer brilliant color rendering of objects colored across the visible spectrum. A light source that incorporates LEDs and has high CRI values is desired.

SUMMARY

An illumination module includes a light mixing cavity with an interior surface area that is physically separated from at least one Light Emitting Diode (LED) and is configured to direct light emitted from the LED to an output window, which is also physically separated from the LED and is disposed above the LED. A portion of the window is coated with a first wavelength converting material and a portion of the interior surface area is coated with a second wavelength converting material. The wavelength converting material on the output window may include Lutetium Aluminum Garnet doped with Cerium (LuAG:Ce). The wavelength converting material on the output window may also include a wavelength converting material with a peak emission wavelength between 615 and 655 nanometers where the spectral response of light emitted from the output window is within 20% and more specifically, 15% of a blackbody radiator at the same CCT, measured as max((test(λ)−Blackbody(λ))/Blackbody(λ)) for λ=500 nm to λ=650 nm. The LED may emit a first colored light that is converted by the light mixing cavity to a second color light with a color conversion efficiency ratio greater than 130 lm/W, measured as luminous flux out of the module divided by radiometric output power of the LEDs, where the light mixing cavity includes a first photo-luminescent material with a peak emission wavelengths between 508 and 528 nanometers and a second photo-luminescent material with a peak emission wavelength between 615 and 655 nanometers.

Further details and embodiments and techniques are described in the detailed description below. This summary does not purport to define the invention. The invention is defined by the claims.

BRIEF DESCRIPTION OF THE DRAWINGS

The accompanying drawings, where like numerals indicate like components, illustrate embodiments of the invention.

FIG. **1** illustrates the spectral response of a blackbody radiator with a correlated color temperature (CCT) of 3,000 Kelvin and the spectral response of an exemplary LED with a peak emission near 450 nanometers.

FIG. **2** illustrates the emission spectra of an LED and several photo-luminescent materials.

FIG. **3** illustrates the emission spectra of an LED and the excitation spectra of the three phosphors discussed with respect to FIG. **2**.

FIG. **4** illustrates a perspective view of an embodiment of a light emitting diode (LED) illumination device.

FIG. **5** shows an exploded view illustrating components of LED illumination device.

FIG. **6** illustrates a perspective, cross-sectional view of an embodiment of the LED illumination device.

FIG. **7**A illustrates the simulated emission spectrum of a blackbody radiator at 2,700 Kelvin and the measured emission spectra of a reference illumination module and a high CRI illumination module.

FIG. **7**B compares each specific CRI value for the reference and high CRI illumination modules of FIG. **7**A.

FIG. **8**A illustrates the simulated emission spectrum of a blackbody radiator at 3,000 Kelvin and the measured emission spectra of a reference illumination module and a high CRI illumination module.

FIG. **8**B compares each specific CRI value for the reference and high CRI illumination modules of FIG. **8**A.

FIG. **9**A illustrates the simulated emission spectrum of a blackbody radiator at 4,000 Kelvin and the measured emission spectra of a reference illumination module and a high CRI illumination module.

FIG. **9**B compares each specific CRI value for the reference and high CRI illumination modules of FIG. **9**A.

FIG. **10** illustrates the maximum percentage deviation of measured spectra from the blackbody curve for several illumination modules over a set of wavelength ranges.

FIG. **11** illustrates improvement in color conversion efficiency and CRI for a high efficiency, high CRI illumination module with three phosphors and a reference illumination module with two phosphors.

FIG. **12**A illustrates the color conversion efficiencies of three groups of high efficiency, high CRI modules at two different target CCTs.

FIG. **12**B illustrates the color conversion efficiencies of three other groups of high efficiency, high CRI modules at two different target CCTs.

DETAILED DESCRIPTION

Reference will now be made in detail to background examples and some embodiments of the invention, examples of which are illustrated in the accompanying drawings.

FIG. **1** illustrates the spectral response of a blackbody radiator with a correlated color temperature (CCT) of 3,000 Kelvin. As discussed above, below 5,000 Kelvin, the various CRI index values are designed to be 100 for a blackbody radiator. Thus, an approach to the design of an illumination module that exhibits high CRI values at a CCT below 5,000 Kelvin is to design the module to emit light with a spectral power distribution that closely matches that of a blackbody radiator over the wavelength range of interest, e.g. the visible spectrum. FIG. **1** also illustrates the spectral response of an exemplary LED with a peak emission near 450 nanometers. LEDs with a peak emission between 380 and 490 nanometers may be selected as the source of light in an LED-based illumination module because of the radiometric efficiency of LEDs in this peak wavelength regime. However, as illustrated in FIG. **1**, the spectral response of the LED is very narrow, varies greatly from the spectral response of a blackbody radiator, and suffers from a very low CRI.

To achieve light output with high CRI values from an LED-based illumination module, a portion of the narrow band emission of the LED is converted to various higher wavelengths to more closely emulate the spectral response of a blackbody radiator. FIG. **2** illustrates the emission spectra of an LED and several photo-luminescent materials, which when combined as described in this patent document, closely match the spectral response of a blackbody radiator at 3,000 Kelvin. Each of the exemplary photo-luminescent materials has a unique chemical composition, such as a particular phosphor. Although different phosphors may be blended, for purposes of this patent document, a photo-luminescent material is only one distinct chemical compound, not a blend. Example phosphors that may used to obtain efficient illumination modules with high CRI values for each of the CRI indices R1-R15 include phosphors such as $CaAlSiN_3$:Eu, $SrAlSiN_3$:Eu, $CaAlSiN_3$:Eu, $Ba_3Si_6O_{12}N_2$:Eu, Ba_2SiO_4:Eu, Sr_2SiO_4:Eu, Ca_2SiO_4:Eu, $Ca_3Sc_2Si_3O_{12}$:Ce, $Ca_3Mg_2Si_3O_{12}$:Ce, $CaSc_2O_4$:Ce, $CaSi_2O_2N_2$:Eu, $SrSi_2O_2N_2$:Eu, $BaSi_2O_2N_2$:Eu, $Ca_5(PO_4)_3Cl$:Eu, $Ba_5(PO_4)_3Cl$:Eu, $Cs_2CaP_2O_7$, $Cs_2SrP_2O_7$, $SrGa_2S_4$:Eu, $Lu_3Al_5O_{12}$:Ce, $Ca_8Mg(SiO_4)_4Cl_2$:Eu, $Sr_8Mg(SiO_4)_4Cl_2$:Eu, $La_3Si_6N_{11}$:Ce, $Y_3Al_5O_{12}$:Ce, $Y_3Ga_5O_{12}$:Ce, $Gd_3Al_5O_{12}$:Ce, $Gd_3Ga_5O_{12}$:Ce, $Tb_3Al_5O_{12}$:Ce, $Tb_3Ga_5O_{12}$:Ce, and $Lu_3Ga_5O_{12}$:Ce.

FIG. **2** illustrates the spectral response of a red emitting $CaAlSiN_3$:Eu phosphor manufactured by Mitsubishi Chemical Corporation (Japan), which is designed to exhibit a peak emission at approximately 650 nanometers. FIG. **2** also illustrates the emission spectra of a LuAG:Ce phosphor manufactured by Merck (Germany), which is designed to exhibit a peak emission at approximately 518 nanometers. FIG. **2** also illustrates the emission spectra of a $Y_3Al_5O_{12}$:Ce (YAG) phosphor manufactured by Phosphor Technology Ltd. (England), which is designed to exhibit a peak emission at approximately 555 nanometers. These specific phosphors are exemplary and many other phosphor compositions could also or alternatively be employed. In the present example, these phosphors are selected for temperature stability, long term reliability, and durability in the face of environmental conditions present in various lighting environments. To obtain efficient illumination modules with high CRI values for each of the CRI indices R1-R15, a red emitting phosphor with a peak emission wavelength between 618 and 655 nanometers may be employed. To compensate for a deficiency in spectral response in the wavelength range between 460 and 525 nanometers created by the use of the red emitting phosphor, a green emitting phosphor with a peak emission wavelength between 508 and 528 nanometers may be employed. In this way it is possible to obtain an illumination module with a spectral response that is within 20% of an emission spectrum of a blackbody radiator in the wavelength range between 500 and 650 nanometers. In other examples, it is possible to obtain an illumination module with a spectral response that is within 15% of an emission spectrum of a blackbody radiator in the wavelength range between 500 and 650 nanometers. In other examples, it is possible to obtain an illumination module with a spectral response that is within 10% of an emission spectrum of a blackbody radiator in the wavelength range between 500 and 650 nanometers. Furthermore, illumination modules constructed in this manner may exhibit color conversion efficiency ratios greater than 130 lm/W, as discussed below. In addition, a yellow emitting phosphor with a peak emission in the wavelength range between 545 and 565 nanometers may be employed. In some examples, the green emitting phosphor, the red emitting phosphor, and the yellow emitting phosphor are mixed in proportion by weight between 55 and 90 parts green phosphor, between 5 and 25 parts red phosphor, and between 5 and 35 parts yellow phosphor to obtain high efficiency, high CRI illumination modules. In general, at least three photo-luminescent materials are selected such that each of their peak emission wavelengths are at least thirty five nanometers apart from one another and no more than one hundred and fifty nanometers from one another. For example, at least three phosphors with peak emission wavelengths spaced between 505 nanometers and 655 nanometers are employed to convert portions of light emitted from an LED to produce color converted light with high CRI values. By selecting three phosphors with peak emission wavelengths spaced in this manner, the color converted light more closely approximates the spectral response of a blackbody radiator.

In addition to achieving color conversion with high CRI values, doing so with high efficiency is also desirable. Selection of phosphors with excitation spectra that closely match the emission spectrum of the LED improves color conversion efficiency. FIG. **3** illustrates the excitation spectra of the three phosphors discussed with respect to FIG. **2**. The emission spectrum of the exemplary royal blue LED falls within the excitation spectra of the LuAG and YAG phosphors. In other words, these phosphors efficiently convert royal blue light. If the excitation source were a red light, each of these phosphors would exhibit very little response, thus color conversion efficiency would be very low. In one example, at least two phosphors are selected with peak values of their excitation spectra within one hundred nanometers of the peak value of the emission spectra of the light emitted from the LEDs of the LED-based illumination module. In another example, at least two phosphors are selected with peak values of their excitation spectra within fifty nanometers of the peak value of the emission spectra of the light emitted from the LEDs of the LED-based illumination module.

FIG. **4** illustrates a perspective view of an embodiment of a light emitting diode (LED) illumination device **100**. The illumination module **100** may be used, e.g., as a shelf lighting module, a street lighting module, a wall wash lighting module, an accent lighting module, an orientation lighting module or any other desired lighting module. FIG. **5** shows an exploded view illustrating components of LED illumination device **100**. It should be understood that as defined herein an LED illumination device is not an LED, but is an LED light source or fixture or component part of an LED light source or fixture. LED illumination device **100** includes one or more LED die or packaged LEDs and a mounting board to which LED die or packaged LEDs are attached. FIG. **6** illustrates a perspective, cross-sectional view of an embodiment of the LED illumination device **100**.

Referring to FIG. **5**, LED illumination device **100** includes one or more solid state light emitting elements, such as light emitting diodes (LEDs) **102** mounted on mounting board **104**. Mounting board **104** is attached to mounting base **101** and secured in position by mounting board retaining ring **103**, e.g. using suitable fasteners, fastening features, or fastening adhesives. Together, mounting board **104** populated by LEDs **102** and mounting board retaining ring **103** comprise light source sub-assembly **115**. Light source sub-assembly **115** is operable to convert electrical energy into light using LEDs **102**.

LED illumination device **100** may also include a light conversion sub-assembly **116**, which may include a cavity body **105** and output window **108**, and optionally includes bottom reflector insert **106** that may be placed over the mounting board **104** and sidewall insert **107** that may be placed inside cavity body **105**. Output window **108** may be manufactured from an acrylic material that includes scattering particles, e.g., made from TiO2, ZnO, or BaSO4, or from AlO2, either in crystalline form (Sapphire) or on ceramic form (Alumina), or other material that have low absorption over the full visible spectrum. Output window **108** is fixed to the top of cavity body **105**. Cavity body **105** or the sidewall insert **107**, if used, includes interior sidewalls **110**, illustrated in FIG. **6**. The interior sidewalls **110** should be highly reflective, which may be achieved, e.g., by polishing the interior of cavity body **105**, which may be aluminum, or using a reflective coating containing titanium dioxide (TiO2), zinc oxide (ZnO), and barium sulfate (BaSO4) particles, or a combination of these materials. Where the sidewall insert **107** is used, the high reflectively of the interior sidewalls **110** may be achieved by manufacturing the sidewall insert from a reflective material such as Miro®, produced by Alanod, a German company. The bottom reflector insert **106**, if used, may similarly be manufactured from Miro®, produced by Alanod.

When cavity body **105** is mounted over light source sub-assembly **115**, the interior sidewalls **110** of the cavity body **105** (or sidewall insert **107**, if used), the top of mounting board **104** (or bottom reflector insert **106**, if used), and output window **108** enclose a volume that defines a primary light mixing cavity **109** in the LED illumination device **100**, illustrated in FIG. **6**. Within the light mixing cavity **109** a portion of light from the LEDs **102** is reflected until it exits through output window **108**. The bottom reflector insert **106**, which may optionally be placed over mounting board **104**, includes holes such that the light emitting portion of each LED **102** is not blocked by bottom reflector insert **106**.

For purposes of performing color conversion, the light emitted from light source sub-assembly **115** is directed to the light mixing cavity **109** for color conversion and color mixing. In one embodiment, light conversion sub-assembly **116** includes multiple wavelength converting materials coating at least a portion of one or more of the interior sidewalls **110**, output window **108** and the top of mounting board **104** (or bottom reflector insert **106**, if used). For purposes of this patent document, a wavelength converting material is any single chemical compound or mixture of different chemical compounds that performs a color conversion function, e.g. absorbs light of one peak wavelength and emits light at another peak wavelength. By way of example, portions of the interior sidewalls **110** of the sidewall insert **107** may be coated with one or more wavelength converting materials **110**A, while portions of output window **108** may be coated with one or more different wavelength converting materials **108**B, as illustrated in FIG. **6**. If desired, wavelength converting materials **110**A and **108**B may include than one type of wavelength converting materials, which may be blended together, layered over each other, or applied in distinct areas, or any combination of the foregoing. If desired, scattering particles, such as such as TiO2, ZnO, and/or BaSO4 particles, may be mixed into the wavelength converting material layers.

Reflecting the light within the cavity **109** prior to exiting the output window **108** has the effect of mixing the light and providing a more uniform distribution of the light that is emitted from the LED illumination device **100**. Thus, the photo converting properties of the wavelength converting materials in combination with the mixing of light within cavity **109** results in a uniformly distributed color converted light output by output window **108**. By tuning the chemical properties of the wavelength converting materials and the geometric properties of the coatings on the interior surfaces of cavity **109**, specific color properties of light output by output window **108** may be specified, e.g. color point, color temperature, and color rendering index (CRI).

In this embodiment, the LEDs **102** may all emit light of different peak emission wavelengths within the UV to blue range. When used in combination with phosphors (or other wavelength conversion means), which may be, e.g., in or on the output window **108**, applied to the sidewalls of cavity **109**, applied to the top of mounting board **104** (or bottom reflector insert **106**, if used) or applied to other components placed inside the cavity (not shown), the output light of the illumination device **100** has the desired color with high CRI values. The adjustment of color point of the illumination device may be accomplished by replacing sidewall insert **107** and/or the output window **108**, which similarly may be coated or impregnated with one or more wavelength converting materials. Adjustment of color point may be achieved by choosing the shape and height of the sidewalls that define the cavity, selecting which of the parts in the cavity will be covered with phosphor or not, and by optimization of the thickness or density of the phosphors.

In a first example, the performance of two illumination modules **100** with a target CCT of 2700 Kelvin are compared. A reference illumination module includes 9 LEDs selected to emit in the royal blue range between 440 and 460 nanometers and one LED selected to emit in the blue range between 460 and 490 nanometers. A red emitting $(SrCa)AlSiN_3$:Eu phosphor with a peak emission at approximately 630 nanometers covers a portion of sidewall insert **107**. The phosphor is mixed in a binder of silicone in a proportion in the range of 2-6% by volume, uniformly applied to sidewall insert **107** at a thickness in the range of 60-120 micrometers, and cured. In one example, the phosphor is mixed in a binder of silicone in a proportion of approximately 4% by volume, uniformly applied to sidewall insert **107** at a thickness of approximately 90 micrometers, and cured. In addition, a yellow emitting $Y_3Al_5O_{12}$:Ce phosphor is then mixed in a binder of silicone in a proportion in the range of 50-80% by volume, uniformly applied to output window **108** at a thickness in the range of

90-130 micrometers, and cured. In one example, the phosphor is mixed in a binder of silicone in a proportion of approximately 70% by volume, uniformly applied to sidewall insert **107** at a thickness of approximately 110 micrometers, and cured. Optionally, some amount of red emitting (SrCa)$AlSiN_3$:Eu phosphor may also be mixed with the yellow emitting $Y_3Al_5O_{12}$:Ce phosphor.

A high CRI illumination module includes 7 LEDs selected to emit in the royal blue range between 440 and 460 nanometers and three LEDs selected to emit in the blue range between 460 and 490 nanometers. A red emitting (SrCa)$AlSiN_3$:Eu phosphor with a peak emission at approximately 650 nanometers covers a portion of sidewall insert **107**. The phosphor is mixed in a binder of silicone in a proportion in the range of 2-6% by volume, uniformly applied to sidewall insert **107** at a thickness of in the range of 60-120 micrometers, and cured. In one example, the phosphor is mixed in a binder of silicone in a proportion of approximately 4% by volume, uniformly applied to sidewall insert **107** at a thickness of approximately 90 micrometers, and cured. In addition, a mixture of phosphors in the ranges of approximately 10-25 parts YAG, 5-15 parts (SrCa)$AlSiN_3$:Eu, and 60-80 parts LuAG:Ce by weight is assembled. Environmental conditions and the condition of each phosphor affects the results obtained for any particular combination of phosphors. In one example, a mixture of phosphors including approximately 17 parts YAG, approximately 11 parts (SrCa)$AlSiN_3$:Eu, and approximately 72 parts LuAG:Ce by weight is assembled. This mixture is then mixed in a binder of silicone in a proportion in the range of 50-80% by volume of silicone, uniformly applied to output window **108** at a thickness in the range of 90-130 micrometers, and cured. In one example, the mixture is mixed in a binder of silicone in a proportion of approximately 75% by volume, uniformly applied to output window **108** at a thickness of approximately 110 micrometers, and cured.

FIG. **7**A illustrates the simulated emission spectrum of a blackbody radiator at 2,700 Kelvin and the measured emission spectra of both the reference illumination module and the high CRI illumination module of this example. In this figure, the emission spectrum of the blackbody radiator has been normalized at 640 nanometers. Comparing the resulting spectra, the spectral response of the high CRI illumination module more closely approximates the blackbody radiator than the reference illumination module in the range of 500 nanometers to 650 nanometers. More specifically, using the following formula

$$\max \frac{|\mathrm{Test}(\lambda) - BlackBody(\lambda)|}{Blackbody(\lambda)} \Bigg|_{\lambda=500\ nm}^{\lambda=650\ nm} \tag{2}$$

the reference illumination module has a spectral response that is within 48% of the emission spectrum of a blackbody radiator in the wavelength range between 500 and 650 nanometers, the high CRI illumination module is within 14% of the emission spectrum of a blackbody radiator in the same wavelength range.

FIG. **7**B compares each specific CRI value for both modules and each CRI value is improved. In particular, R_9, which is relevant for color rendering of deep red, is improved from a score of 27 to 97 in this example. In summary, a high CRI illumination module constructed in a manner as discussed above emits light with R_a>95, R_9>95, average value of CRI values R_{10}-R_{14}>95, and R_{15}>95 for modules with a target CCT of 2,700 Kelvin.

In a second example, the performance of two illumination modules **100** with a target CCT of 3,000 Kelvin are compared. A reference illumination module includes 9 LEDs selected to emit in the royal blue range and one LED selected to emit in the blue range. A red emitting (SrCa)$AlSiN_3$:Eu phosphor with a peak emission at approximately 630 nanometers covers a portion of sidewall insert **107**. The phosphor is mixed in a binder of silicone in a proportion in the range of 2-6% by volume, uniformly applied to sidewall insert **107** at a thickness in the range of 60-120 micrometers, and cured. In one example, the phosphor is mixed in a binder of silicone in a proportion of approximately 4% by volume, uniformly applied to sidewall insert **107** at a thickness of approximately 90 micrometers, and cured. In addition, a yellow emitting $Y_3Al_5O_{12}$:Ce phosphor is then mixed in a binder of silicone in a proportion in the range of 50-80% by volume of silicone, uniformly applied to output window **108** at a thickness in the range of 90-130 micrometers, and cured. In one example, the phosphor is mixed in a binder of silicone in a proportion of approximately 70% by volume, uniformly applied to sidewall insert **107** at a thickness of approximately 110 micrometers, and cured. Optionally, some amount of red emitting (SrCa)$AlSiN_3$:Eu phosphor may also be mixed with the yellow emitting $Y_3Al_5O_{12}$:Ce phosphor.

A high CRI illumination module includes 7 LEDs selected to emit in the royal blue range between 440 and 460 nanometers and three LEDs selected to emit in the blue range between 460 and 490 nanometers. A red emitting (SrCa)$AlSiN_3$:Eu phosphor with a peak emission at approximately 650 nanometers covers a portion of sidewall insert **107**. The phosphor is mixed in a binder of silicone in a proportion in the range of 2-6% by volume, uniformly applied to sidewall insert **107** at a thickness of in the range of 60-120 micrometers, and cured. In one example, the phosphor is mixed in a binder of silicone in a proportion of approximately 4% by volume, uniformly applied to sidewall insert **107** at a thickness of approximately 90 micrometers, and cured. In addition, a mixture of phosphors in the ranges of approximately 10-25 parts YAG, 5-15 parts (SrCa)$AlSiN_3$:Eu, and 60-80 parts LuAG:Ce by weight is assembled. Environmental conditions and the condition of each phosphor affects the results obtained for any particular combination of phosphors. In one example, a mixture of phosphors including approximately 17 parts YAG, approximately 11 parts (SrCa)$AlSiN_3$:Eu, and approximately 72 parts LuAG:Ce by weight is assembled. This mixture is then mixed in a binder of silicone in a proportion in the range of 50-80% by volume, uniformly applied to output window **108** at a thickness in the range of 90-130 micrometers, and cured. In one example, the mixture is mixed in a binder of silicone in a proportion of approximately 70% by volume, uniformly applied to output window **108** at a thickness of approximately 110 micrometers, and cured.

FIG. **8**A illustrates the simulated emission spectrum of a blackbody radiator at 3,000 Kelvin and the measured emission spectra of both the reference illumination module and the high CRI illumination module of this example. In this figure, the emission spectrum of the blackbody radiator has been normalized at 640 nanometers. The spectral response of the high CRI illumination module more closely approximates the blackbody radiator than the reference illumination module in the range of 500 nanometers to 650 nanometers. More specifically, using the formula of equation (2), the reference illumination module has a spectral response that is within 49% of the emission spectrum of a blackbody radiator in the wavelength range between 500 and 650 nanometers, the high CRI illumination module is within 12% of the emission spectrum of a blackbody radiator in the same wavelength range.

FIG. **8**B compares each specific CRI value for both modules and each CRI value is improved. In particular, R_9 is improved from a score of 16 to 98 in this example. In summary, a high CRI illumination module constructed in a manner as discussed above emits light with R_a>95, R_9>90, average value of CRI values R_{10}-R_{14}>95, and R_{15}>95 for modules with a target CCT of 3,000 Kelvin.

In a third example, the performance of two illumination modules **100** with a target CCT of 4,000 Kelvin are compared. The reference illumination module includes 7 LEDs selected to emit in the royal blue range and three LEDs selected to emit in the blue range. A red emitting (SrCa)$AlSiN_3$:Eu phosphor with a peak emission at approximately 630 nanometers covers a portion of sidewall insert **107**. The phosphor is mixed in a binder of silicone in a proportion in the range of 2-6% by volume, uniformly applied to sidewall insert **107** at a thickness in the range of 60-120 micrometers, and cured. In one example, the phosphor is mixed in a binder of silicone in a proportion of approximately 4% by volume, uniformly applied to sidewall insert **107** at a thickness of approximately 90 micrometers, and cured. In addition, a yellow emitting $Y_3Al_5O_{12}$:Ce phosphor is then mixed in a binder of silicone in a proportion in the range of 50-80% by volume of silicone, uniformly applied to output window **108** at a thickness in the range of 90-130 micrometers, and cured. In one example, the phosphor is mixed in a binder of silicone in a proportion of approximately 65% by volume, uniformly applied to sidewall insert **107** at a thickness of approximately 110 micrometers, and cured. Optionally, some amount of red emitting (SrCa)$AlSiN_3$:Eu phosphor may also be mixed with the yellow emitting $Y_3Al_5O_{12}$:Ce phosphor.

The high CRI illumination module also includes 7 LEDs selected to emit in the royal blue range and three LEDs selected to emit in the blue range. A red emitting (SrCa)$AlSiN_3$:Eu phosphor with a peak emission at approximately 650 nanometers covers a portion of sidewall insert **107**. The phosphor is mixed in a binder of silicone in a proportion in the range of 2-6% by volume, uniformly applied to sidewall insert **107** at a thickness of in the range of 60-120 micrometers, and cured. In one example, the phosphor is mixed in a binder of silicone in a proportion of approximately 4% by volume, uniformly applied to sidewall insert **107** at a thickness of approximately 90 micrometers, and cured. In addition, a mixture of phosphors in the ranges of approximately 10-25 parts YAG, 5-15 parts (SrCa)$AlSiN_3$:Eu, and 60-80 parts LuAG:Ce by weight is assembled. Environmental conditions and the condition of each phosphor affects the results obtained for any particular combination of phosphors. In one example, a mixture of phosphors including approximately 17 parts YAG, approximately 11 parts (SrCa)$AlSiN_3$:Eu, and approximately 72 parts LuAG:Ce by weight is assembled. This mixture is then mixed in a binder of silicone in a proportion in the range of 50-80% by volume, uniformly applied to output window **108** at a thickness in the range of 90-130 micrometers, and cured. In one example, the mixture is mixed in a binder of silicone in a proportion of approximately 70% by volume, uniformly applied to output window **108** at a thickness of approximately 110 micrometers, and cured.

FIG. **9**A illustrates the simulated emission spectrum of a blackbody radiator at 4,000 Kelvin and the measured emission spectra of both the reference illumination module and the high CRI illumination module of this example. In this figure, the emission spectrum of the blackbody radiator has been normalized at 635 nanometers. The spectral response of the high CRI illumination module more closely approximates the blackbody radiator than the reference illumination module in the range of 500 nanometers to 650 nanometers. More specifically, using the formula of equation (2) the reference illumination module has a spectral response that is within 57% of the emission spectrum of a blackbody radiator in the wavelength range between 500 and 650 nanometers, the high CRI illumination module is within 19% of the emission spectrum of a blackbody radiator in the same wavelength range.

FIG. **9**B compares each specific CRI value for both modules and each CRI value is improved. In particular, R_9 is improved from a score of 22 to 90 in this example. In summary, a high CRI illumination module constructed in a manner as discussed above emits light with R_a>95, R_9>85, average value of CRI values R_{10}-R_{14}>95, and R_{15}>95 for modules with a target CCT of 4,000 Kelvin.

FIG. **10** summarizes the percentage deviation of the measured spectra of FIGS. **7**-**9** from each respective blackbody curve over a set of wavelength ranges from 450 to 750 nanometers. Each percentage deviation value is calculated based on the formula of equation (2) evaluated within the corresponding wavelength range of the set of wavelength ranges. For example, the measured spectrum of a high CRI illumination module with a target CCT of 3,000 Kelvin (see FIG. **8**) exhibits a maximum percentage deviation from a blackbody curve of 3,000 Kelvin of 9% in the wavelength range of 500-525 nanometers. Furthermore, in the wavelength range of 500-650 nanometers, the maximum percentage deviation is 12% and, as illustrated, this occurs in the wavelength range of 625-650 nanometers.

In another embodiment, an illumination module **100** is realized that achieves a general CRI value, R_a, greater than 80 while maintaining a color conversion efficiency ratio greater than 130 lm/W. For purposes of this patent document, a color conversion efficiency ratio is defined as the ratio of the photometric output of an illumination module measured in lumens divided by the radiometric power of the light output of the LEDs measured in watts. This definition of color conversion efficiency focuses on the efficiency of the color conversion process of the illumination module.

In a first example, the performance of two illumination modules **100** with a target CCT of 3,000 Kelvin are compared to illustrate general CRI performance and improved color conversion efficiency. Both the reference illumination module and the high efficiency, high CRI illumination module include 10 LEDs selected to all emit in the royal blue range. Royal blue LEDs are selected because they exhibit higher radiant efficiency than longer wavelength emitting LEDs. Furthermore, the current trend in LED manufacturing is to further improve the radiant efficiency of shorter wavelength LEDs such as those in the wavelength range between 440 and 460 nanometers.

The high efficiency, high CRI illumination module employing three phosphors, includes a red emitting (SrCa)$AlSiN_3$:Eu phosphor with a peak emission at approximately 618 nanometers covering a portion of sidewall insert **107**. The phosphor is mixed in a binder of silicone in a proportion in the range of 2-6% by volume, uniformly applied to the sidewall insert **107**, and cured. In one example, the phosphor is mixed in a binder of silicone in a proportion of approximately 4% by volume, uniformly applied to the sidewall insert **107**, and cured. A mixture of phosphors in the ranges 5-15 parts YAG, 5-15 parts (SrCa)$AlSiN_3$:Eu, and 70-95 parts LuAG by weight is assembled. Environmental conditions and the condition of each phosphor affects the results obtained for any particular combination of phosphors. In one example, a mixture of phosphors including approximately 8 parts YAG, approximately 8 parts (SrCa)$AlSiN_3$:Eu, and approximately 84 parts LuAG by weight is assembled. This mixture is then mixed in a binder of silicone in a proportion in the range of

50-80% by volume of silicone, uniformly applied to output window **108** at a thickness in the range of 90-130 micrometers, and cured. In one example, this mixture is mixed in a binder of silicone in a proportion of approximately 70% by volume, uniformly applied to output window **108** at a thickness of approximately 110 micrometers, and cured. (SrCa) $AlSiN_3$:Eu with a peak emission of approximately 618 nanometers is employed because of its relatively high color conversion efficiency in comparison to red phosphors with higher peak emission wavelengths. The reference illumination module, on the other hand, employing two phosphors, includes a red emitting (SrCa)$AlSiN_3$:Eu phosphor with a peak emission at approximately 630 nanometers covering a portion of sidewall insert **107**. The phosphor is mixed in a binder of silicone in a range of 2-6% by volume, uniformly applied to sidewall insert **107**, and cured. In one example, the phosphor is mixed in a binder of silicone in a proportion of approximately 4% by volume, uniformly applied to sidewall insert **107**, and cured. In addition, a YAG phosphor with a peak emission at approximately 555 nanometers is mixed in a binder of silicone in a range of 50-80% by volume, uniformly applied to output window **108**, and cured. In one example, the phosphor is mixed in a binder of silicone in a proportion of approximately 70% by volume of silicone, uniformly applied to output window **108**, and cured.

FIG. **11** illustrates the improvement in color conversion efficiency and CRI. The two phosphor reference illumination module emits light with a general CRI of 78 and a color conversion efficiency ratio of 136. The three phosphor high efficiency, high CRI illumination module achieves a CRI of 81 and a color conversion efficiency ratio of 141. Similar improvements are illustrated in the comparison of a reference module and high efficiency, high CRI module constructed as discussed above, but with a target CCT of 4,000 Kelvin. In this case, the reference module emits light with a general CRI of 74 and a color conversion efficiency ratio of 146. The high efficiency, high CRI illumination module achieves a CRI of 81 and a color conversion efficiency ratio of 158. Unexpected improvements in both CRI and color conversion efficiency are obtained. These improvements are unexpected because typically the use of a greater number of phosphors in a light mixing cavity creates an increase in reabsorption and associated losses that reduce color conversion efficiency. However, by careful selection of phosphors, their ratios, and their placement in the light mixing cavity as described in this patent document, these losses can be effectively mitigated.

FIG. **12**A illustrates the color conversion efficiencies of three groups of two high efficiency, high CRI modules constructed in the manner discussed above. Each group of modules is distinguished by the number of LEDs emitting light into light mixing cavity **109**. A first group includes four LEDs, a second group includes seven LEDs, and a third group includes ten LEDs. Within each group one module exhibits a target CRI of 3,000 Kelvin and the other a target CRI of 4,000 Kelvin. Both modules within each group exhibit a general CRI of at least 80. FIG. **12**A illustrates that each module is able to achieve a color conversion efficiency ratio greater than 140. Thus, for a range of LEDs emitting light into light mixing cavity **109**, similar color conversion efficiencies are obtained.

FIG. **12**B illustrates the color conversion efficiencies of three other groups of two high efficiency, high CRI modules. These modules are constructed in the manner discussed with respect to FIG. **12**A, however, a portion of the sidewall inserts of these three modules are coated with a red emitting (SrCa) $AlSiN_3$:Eu phosphor with a peak emission at approximately 630 nanometers (Red 630), rather than a red emitting (SrCa) $AlSiN_3$:Eu phosphor with a peak emission at approximately 618 nanometers (Red 618). FIG. **12**B illustrates that each module is able to achieve a color conversion efficiency ratio greater than 130. Although the use of Red 630 on the sidewalls rather than Red 618 results in a lower color conversion efficiency ratio, in general, there is also an increase in CRI. In this manner, high efficiency modules can be designed with higher CRI values.

Although certain specific embodiments are described above for instructional purposes, the teachings of this patent document have general applicability and are not limited to the specific embodiments described above. For example, although LEDs **102** are described as LEDs with a peak emission in the UV to blue range, the LEDs **102** can emit different or the same colors, either by direct emission or by phosphor conversion, e.g., where phosphor layers are applied to the LEDs as part of the LED package. Thus, the illumination device **100** may use any combination of colored LEDs **102**, such as red, green, blue, amber, or cyan, or the LEDs **102** may all produce the same color light or may all produce white light. In the embodiments described, specific phosphors were described for exemplary purposes, but any number of phosphors each with peak emission in the ranges discussed above may be employed. For example, the phosphors may be chosen from the set denoted by the following chemical formulas: $Y_3Al_5O_{22}$:Ce, (also known as YAG:Ce, or simply YAG) $(Y,Gd)_3Al_5O_{12}$:Ce, CaS:Eu, SrS:Eu, $SrGa_2S4$:Eu, $Ca_3(Sc,Mg)_2Si_3O_{12}$:Ce, $Ca_3Sc_2Si_3O_{12}$:Ce, $Ca_3Sc_2O_4$:Ce, $Ba_3Si_6O_{12}N_2$:Eu, (Sr,Ca)$AlSiN_3$:Eu, $CaAlSiN_3$:Eu. Furthermore, in the embodiments described, specific ratios of phosphors were described for exemplary purposes, but these ratios may be varied to produce similar results. For example, the ratios may be adjusted by 20% and still achieve the color rendering and efficiency performance described in this patent document. In the embodiments described, specific percentages of phosphors combined with silicone binders and film thicknesses were described for exemplary purposes. These percentages and thicknesses may be varied to produce similar results. Accordingly, various modifications, adaptations, and combinations of various features of the described embodiments can be practiced without departing from the scope of the invention as set forth in the claims.

What is claimed is:

1. An apparatus comprising:

at least one Light Emitting Diode (LED) operable to emit a first colored light characterized by an emission spectrum with a peak wavelength between 380 nanometers and 490 nanometers; and

a primary light mixing cavity operable to convert the first colored light to a second colored light with a color conversion efficiency ratio greater than 1301 m/W, measured as luminous flux out divided by radiometric output power of the at least one LED, wherein a portion of the primary light mixing cavity that is physically separated from the at least one LED includes a first photo-luminescent material with a peak emission wavelength between 508 and 528 nanometers and a second photo-luminescent material with a peak emission wavelength between 615 and 655 nanometers.

2. The apparatus of claim **1**, wherein the primary light mixing cavity includes a third photo-luminescent material with a peak emission wavelength between 545 and 565 nanometers.

3. The apparatus of claim **2**, wherein the first, second, and third photo-luminescent materials are mixed together in a proportion by weight, wherein the proportion is between 55

and 90 parts of the first material, between 5 and 25 parts of the second material, and between 5 and 35 parts of the third material.

4. The apparatus of claim **2**, wherein the first material is a Lutetium Aluminum Garnet doped with Cerium (LuAG:Ce), the second material is a $(SrCa)AlSiN_3$:Eu, and the third material is a Yttrium Aluminum Oxide doped with Cerium ($Y_3Al_5O_{12}$:Ce).

5. The apparatus of claim **2**, wherein the first, second, and third materials are applied to an output window of the primary light mixing cavity.

6. The apparatus of claim **5**, wherein the primary light mixing cavity further comprises:

a sidewall insert, wherein the sidewall insert includes at least one of the first, second, and third photo-luminescent materials.

7. The apparatus of claim **2**, wherein the peak values of the excitation spectra of the first and second photo-luminescent materials are within fifty nanometers of the peak emission wavelength of the light source sub-assembly.

8. The apparatus of claim **2**, wherein the second colored light has a general color rendering index (CRI) value greater than 80.

9. The apparatus of claim **2**, wherein the second colored light has a color rendering index (CRI) value, R_9, greater than 85.

10. An apparatus comprising:

a first Light Emitting Diode (LED) mounted to a top surface of a mounting board; and

a primary light mixing cavity having an interior surface area physically separated from the first LED and configured to direct light emitted from the first LED to an output window, wherein the output window is physically separated from and disposed above the first LED, wherein a first portion of the output window is coated with a first wavelength converting material that includes a Lutetium Aluminum Garnet doped with Cerium (LuAG:Ce), and wherein a first portion of the interior surface area of the primary light mixing cavity is coated with a second wavelength converting material.

11. The apparatus of claim **10**, wherein the first type of wavelength converting material includes a first photo-luminescent material with a peak emission wavelength between 615 and 655 nanometers and a second photo-luminescent material with a peak emission wavelength between 545 and 565, and wherein the LuAG:Ce has a peak emission wavelength between 508 and 528 nanometers.

12. The apparatus of claim **11**, wherein the LuAG:Ce, the first photo-luminescent material, and the second photo-luminescent material are mixed together in a proportion by weight, and wherein the proportion is between 55 and 90 parts of LuAG:Ce, between 5 and 25 parts of the first photo-luminescent material, and between 5 and 35 parts of the second photo-luminescent material.

13. The apparatus of claim **12**, wherein the first photo-luminescent material is a $(SrCa)AlSiN_3$:Eu, and wherein the second photo-luminescent material is a Yttrium Aluminum Oxide doped with Cerium ($Y_3Al_5O_{12}$:Ce).

14. The apparatus of claim **10**, wherein the second wavelength converting material includes a $(SrCa)AlSiN_3$:Eu with a peak emission wavelength between 615 and 655 nanometers.

15. The apparatus of claim **10**, the apparatus comprising at least one LED, wherein the color conversion efficiency ratio of the primary mixing cavity is greater than 1301 m/W, measured as luminous flux out of the primary mixing cavity divided by radiometric output power of the at least one LED.

16. The apparatus of claim **10**, wherein a light emitted from the output window has a color rendering index value, Ra, of 95 or greater, a color rendering index value, R9, of 85 or greater, an average color rendering index value, R10-14, of 95 or greater, and a color rendering index value, R15, of 95 or greater.

17. An apparatus comprising:

a primary light mixing cavity having an interior surface area physically separated from a first light-emitting diode (LED) and configured to direct light emitted from the first LED to an output window, wherein the output window is physically separated from and disposed above the first LED, wherein a first portion of the output window is coated with a first wavelength converting material that includes a first photo-luminescent material with a peak emission wavelength between 615 and 655 nanometers and a Lutetium Aluminum Garnet doped with Cerium (LuAG:Ce) such that a spectral response of a light emitted from the output window is within 20% of a blackbody radiator of the same color temperature measured as max((apparatus(λ)−Blackbody(λ)/Blackbody (λ) for λ=500 nm to λ=650 nm.

18. The apparatus of claim **17**, wherein the first wavelength converting material includes a second photo-luminescent material with a peak emission wavelength between 545 and 565 nanometers.

19. The apparatus of claim **18**, wherein the LuAG:Ce, the first photo-luminescent material, and the second photo-luminescent material are mixed together in a proportion by weight, and wherein the proportion is between 55 and 90 parts of LuAG:Ce, between 5 and 25 parts of the first photo-luminescent material, and between 5 and 35 parts of the second photo-luminescent material.

20. The apparatus of claim **18**, wherein the first photo-luminescent material is a $(SrCa)AlSiN_3$:Eu, and wherein the second photo-luminescent material is a Yttrium Aluminum Oxide doped with Cerium ($Y_3Al_5O_{12}$:Ce).

* * * * *

UNITED STATES PATENT AND TRADEMARK OFFICE

CERTIFICATE OF CORRECTION

PATENT NO. : 8,104,908 B2
APPLICATION NO. : 12/717880
DATED : January 31, 2012
INVENTOR(S) : Gerard Harbers et al.

It is certified that error appears in the above-identified patent and that said Letters Patent is hereby corrected as shown below:

In the Claims

In column 12, line 52, in Claim 1, delete "1301 m/W" and insert -- 130 lm/W --, therefor.

In column 14, line 11, in Claim 15, delete "1301 m/W" and insert -- 130 lm/W --, therefor.

In column 14, lines 34-35, in Claim 17, delete "max((apparatus(λ)-Blackbody(λ)/Blackbody(λ)" and insert -- max((apparatus(λ)-Blackbody(λ))/Blackbody(λ)) --, therefor.

Signed and Sealed this
Thirtieth Day of September, 2014

Michelle K. Lee

Michelle K. Lee
Deputy Director of the United States Patent and Trademark Office