US 20070139949A1

(19) United States

(12) Patent Application Publication

(10) Pub. No.: US 2007/0139949 A1

(43) Pub. Date: Jun. 21, 2007

Tanda et al.

(54) LIGHT EMITTING DEVICE

(75) Inventors: **Yuichiro Tanda**, Shinjuku-ku (JP); **Toshio Matsushita**, Naruto-shi (JP)

Correspondence Address:
DITTHAVONG MORI & STEINER, P.C.
918 Prince St.
Alexandria, VA 22314 (US)

(73) Assignee: **NICHIA CORPORATION**, Anan-shi (JP)

(21) Appl. No.: **11/639,062**

(22) Filed: **Dec. 14, 2006**

(30) **Foreign Application Priority Data**

Dec. 16, 2005 (JP) 2005-364127

Publication Classification

(51) **Int. Cl.**
G02B 6/00 (2006.01)

(52) **U.S. Cl.** **362/551**

(57) **ABSTRACT**

Broad light emission is provided and additionally heat conductivity is increased to improve reliability. A light emitting device comprises a light emitting element, a pair of conductor members, a transparent board and a transparent member. The conductor members are spaced away from each other at an interval in a side-surface direction of the light emitting element and are electrically connected to the light emitting element. The transparent board supports the light emitting element and the pair of conductive members. The transparent member is located on the transparent board and seals the light emitting element and the pair of conductor members. The pair of conductor members are provided with a pair of metal plates that are secured thereon. The pair of metal plates project from the transparent member in directions different from each other.

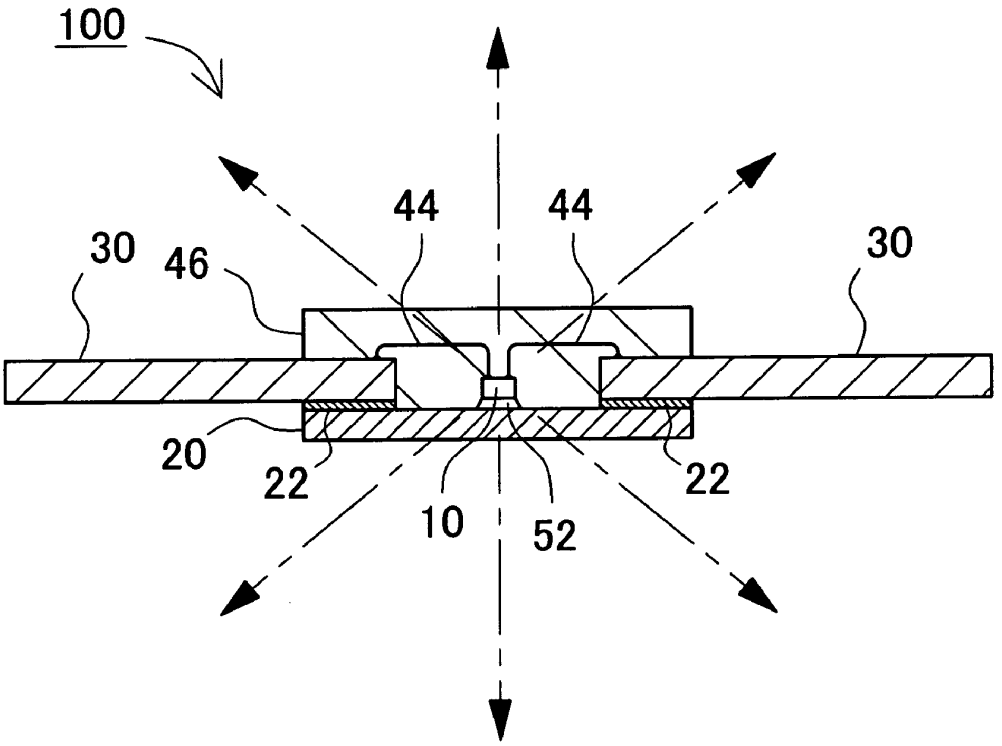

FIG.1

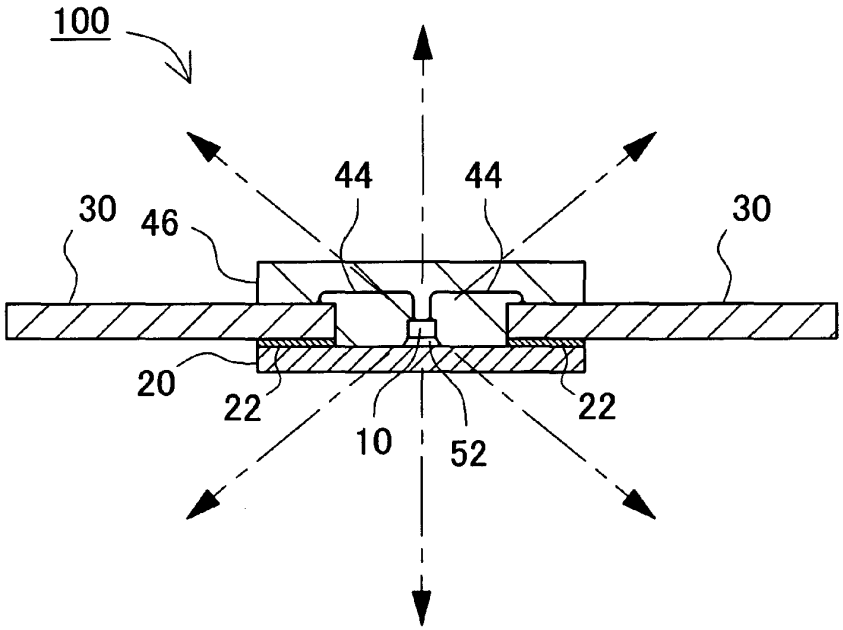

FIG.2

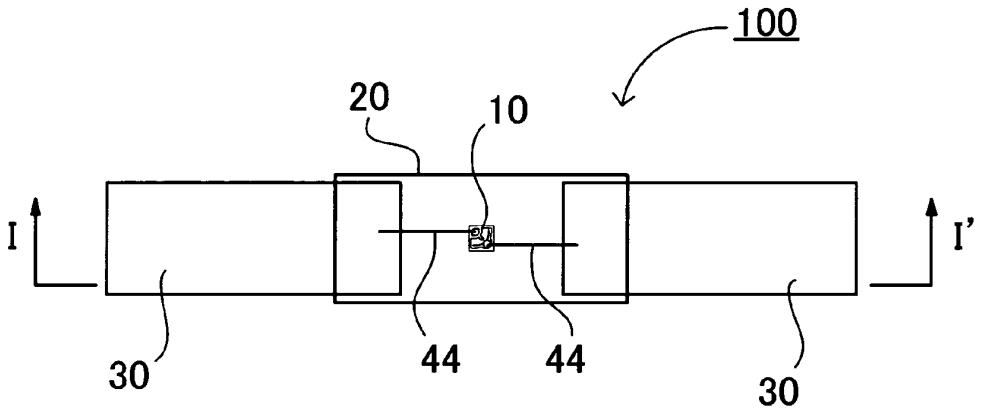

FIG.3

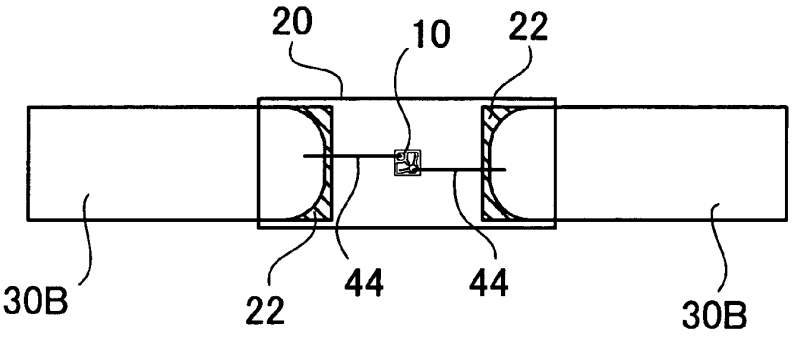

FIG.4

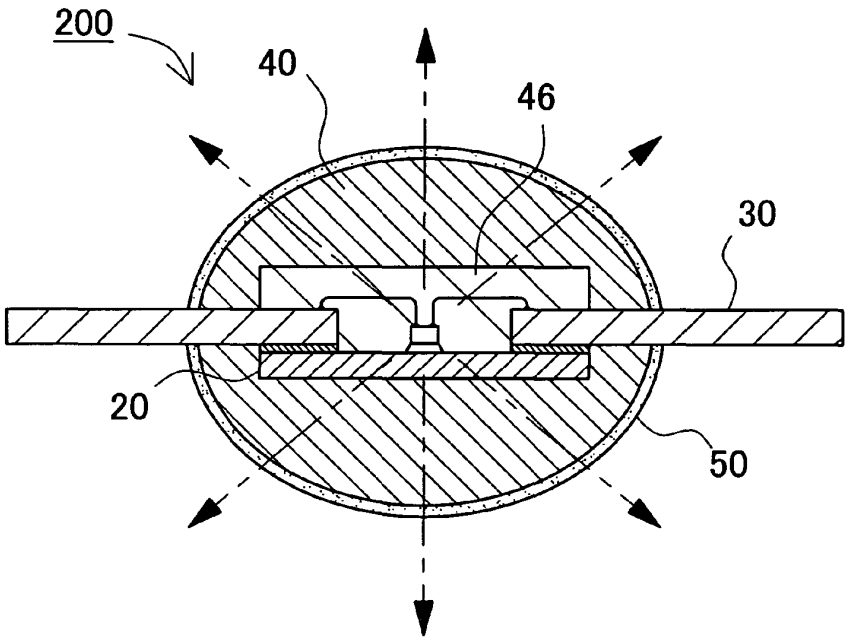

FIG.5

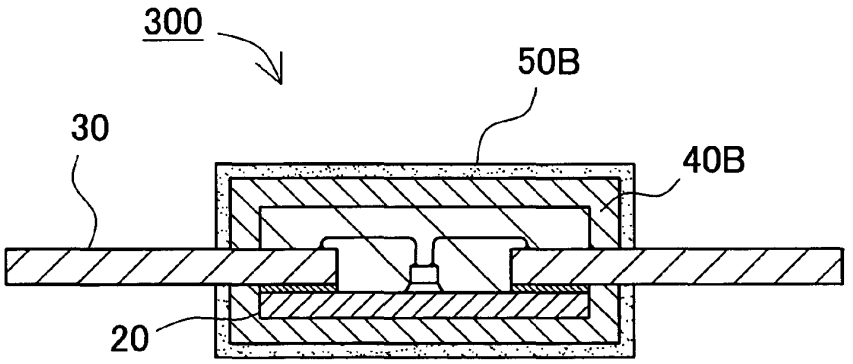

FIG.6

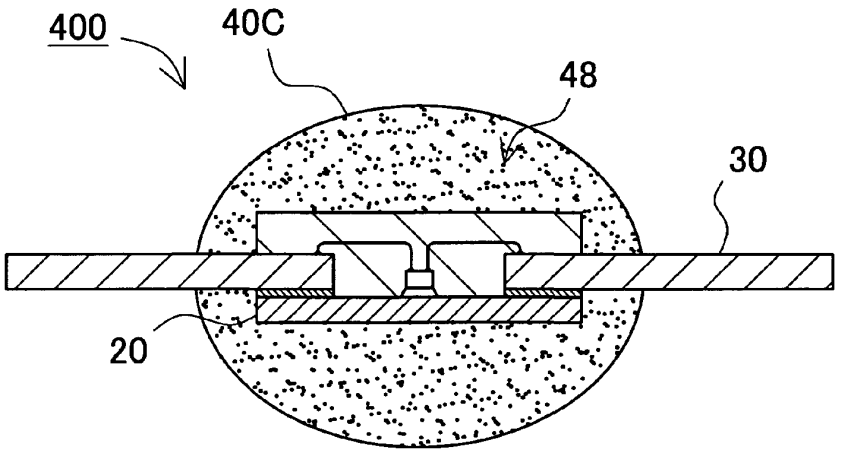

FIG.7

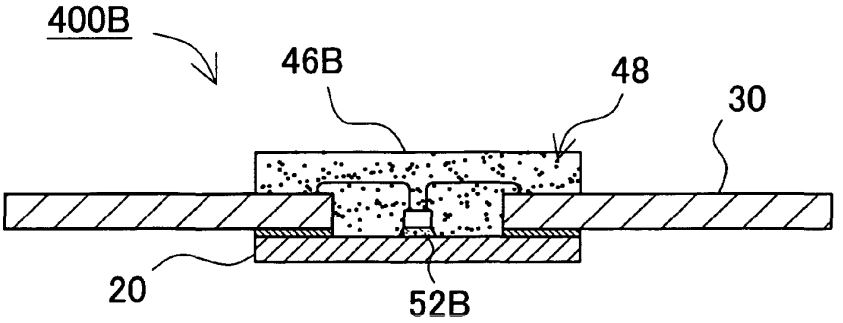

FIG.8

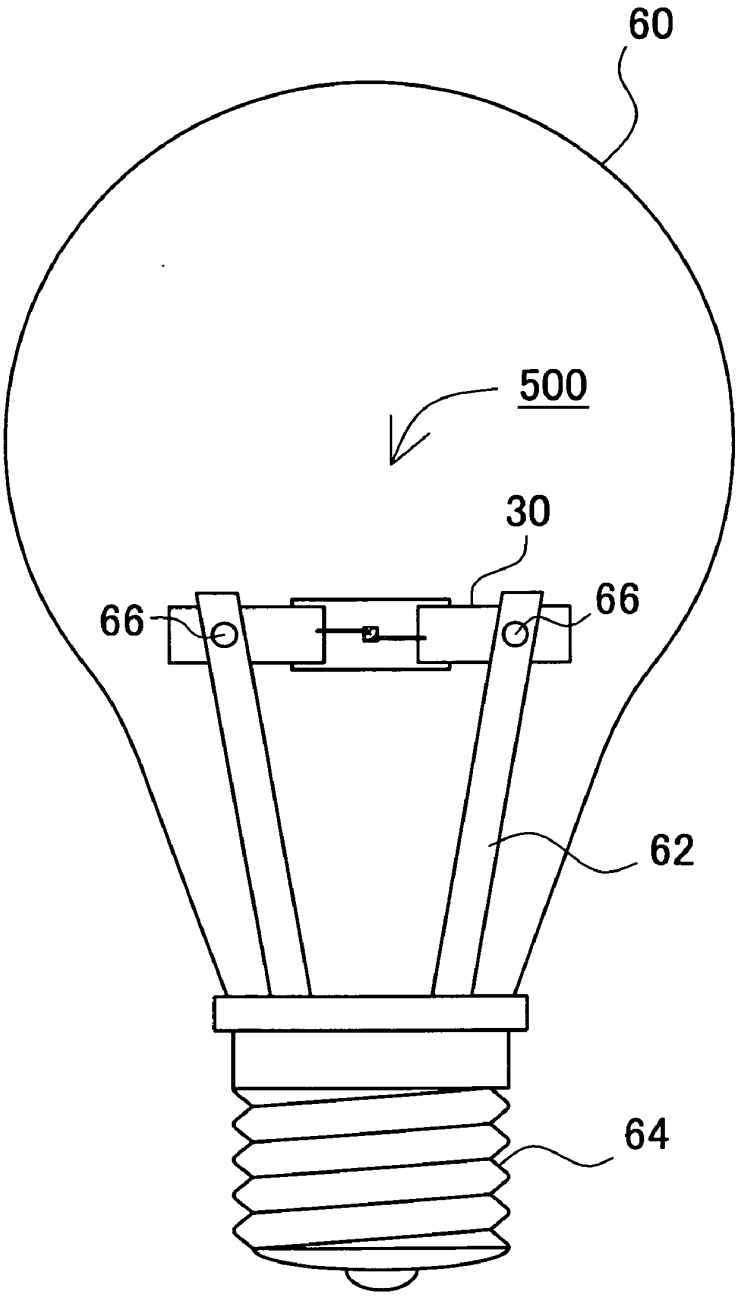

FIG.9

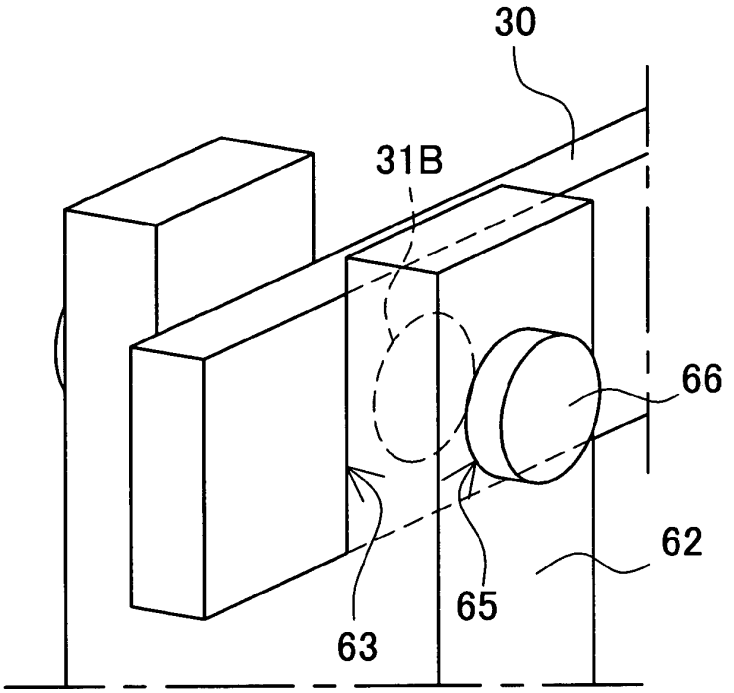

FIG.10

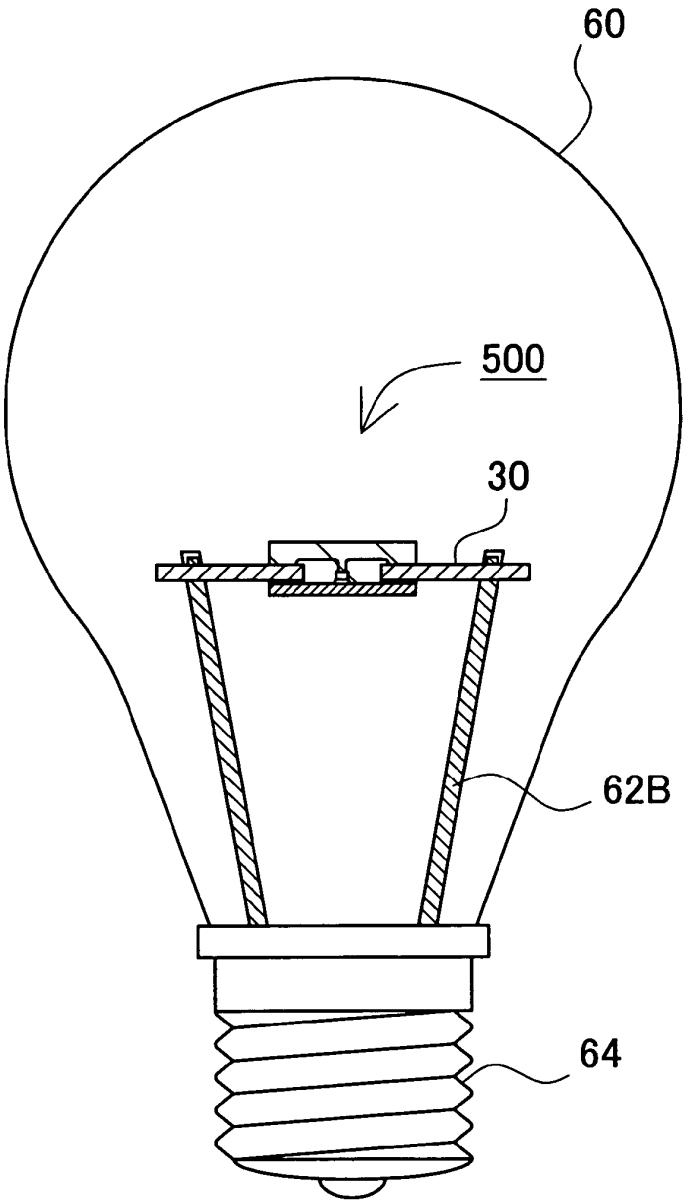

FIG.11

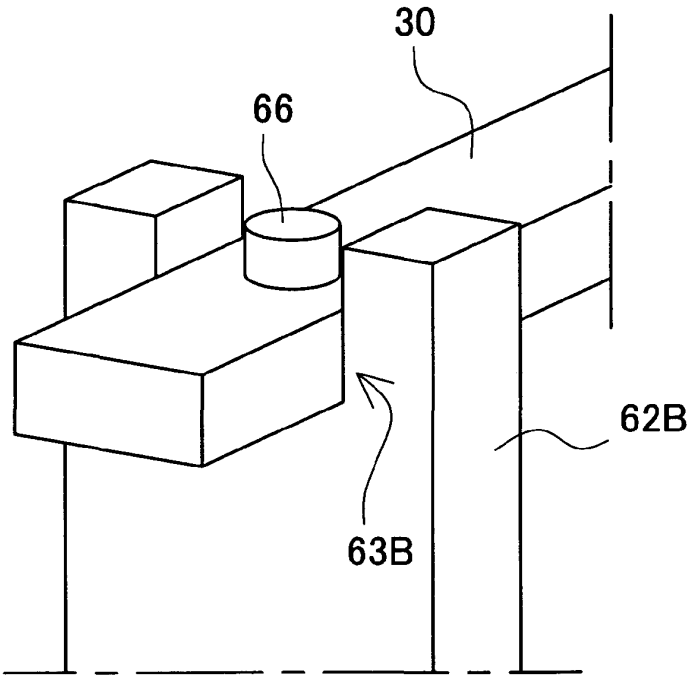

FIG.12

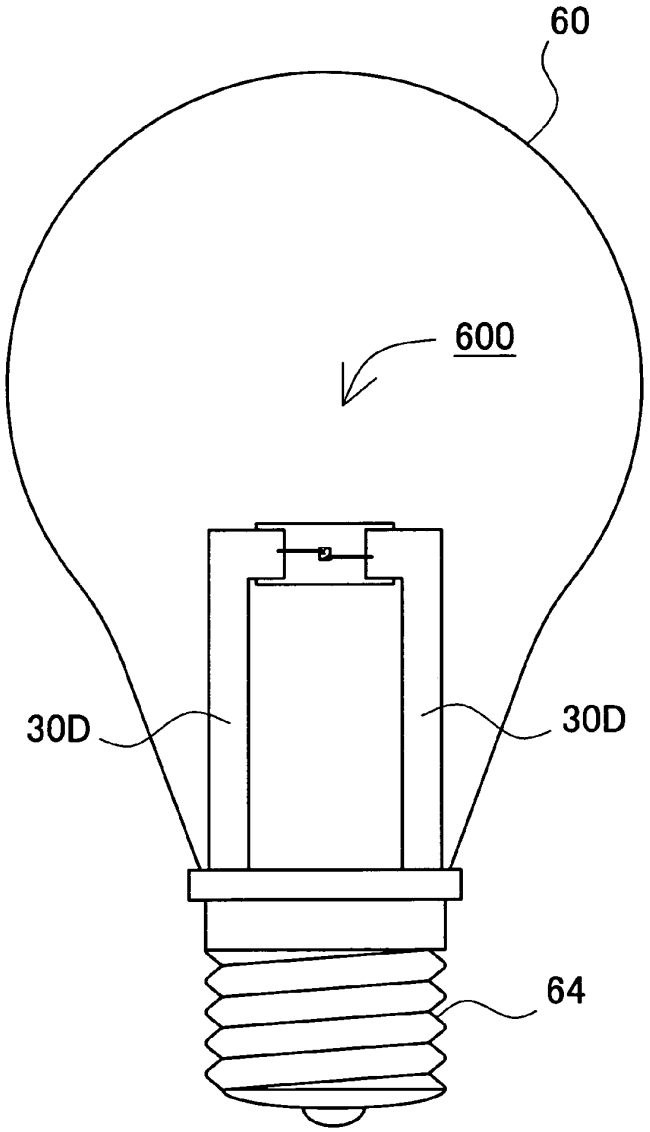

FIG.13

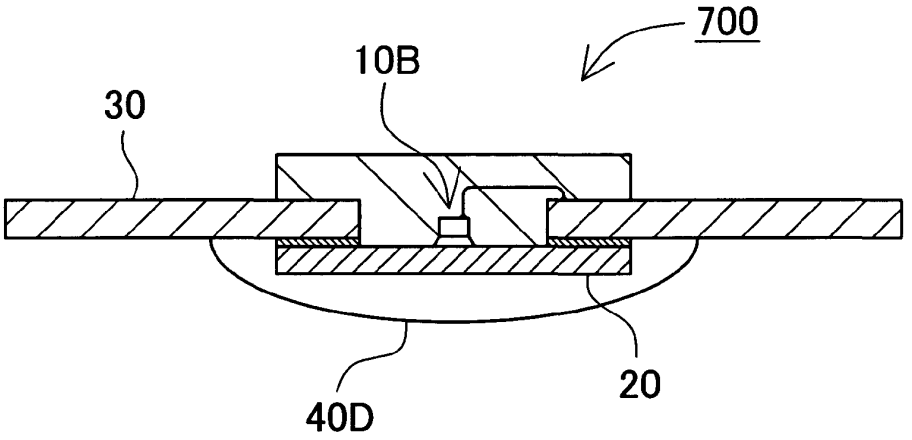

FIG.14

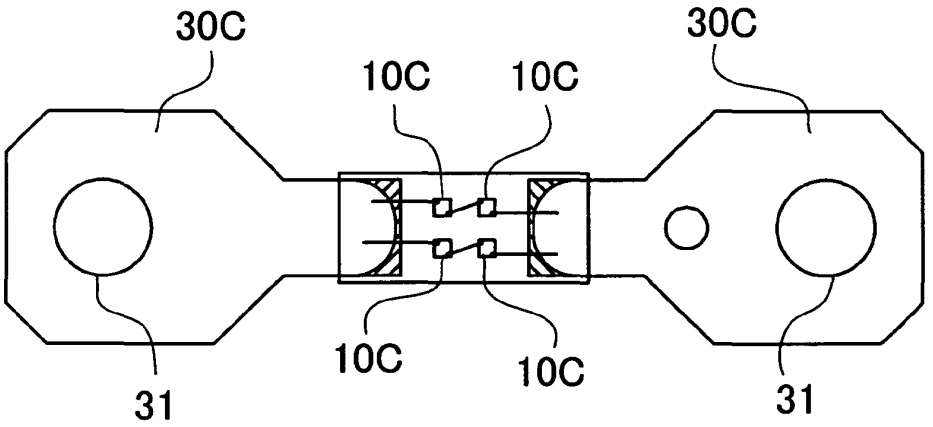

FIG.15

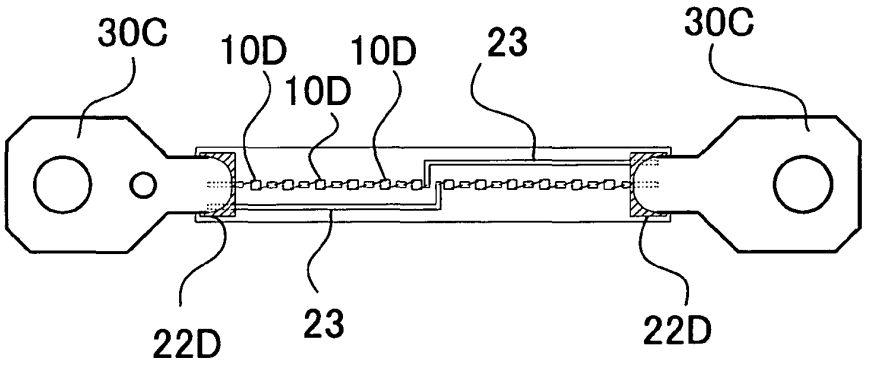

FIG.16

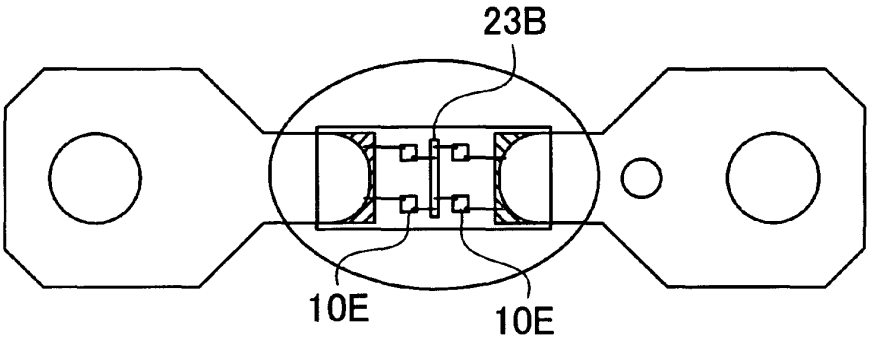

LIGHT EMITTING DEVICE

BACKGROUND OF THE INVENTION

[0001] 1. Field of the Invention

[0002] The present invention relates to a light emitting device that employs a semiconductor element such as light emitting diode and is mainly used in lighting applications, and a method for producing the light emitting device.

[0003] 2. Description of the Related Art

[0004] Light emitting devices that employ light emitting elements are small but high effective in terms of electric power consumption, and emit vivid color light. In addition, semiconductor elements are employed as the light emitting elements, thus, there are no concerns about bulb burnout and so on. Additionally, semiconductor elements have features, such as excellent initial drive characteristics, resistance to vibration or ON/OFF repeats. Since semiconductor elements have these excellent features, light emitting devices that employ semiconductor light emitting elements such as light emitting diode (hereinafter, occasionally referred to as "LED") and semiconductor laser (hereinafter, occasionally referred to as "LD") have been used as various types of light sources. For example, a semiconductor light emitting element has a light emitting layer that is laminated on a transparent base member such as sapphire substrate, GaN substrate, and SiC substrate. In the case where the semiconductor light emitting element is formed in a substantially box shape by cutting, light outgoes not only through the upper surface of the substantially box shape, i.e., its top surface, but also through the lower surface, i.e., its bottom surface, and the side surfaces.

[0005] In consideration of the light outgoing surfaces, a lighting apparatus with a light emitting element as discussed above that is mounted on a transparent conductive portion formed on a transparent board is proposed. In this lighting apparatus, an extending lead is connected to the light emitting element, and a transparent or translucent resin covers the light emitting element, the transparent board and the lead. This lighting apparatus can emit light in 360-degree directions. See Japanese Patent Publication No. 3172947.

SUMMARY OF THE INVENTION

[0006] However, there is a problem that the construction proposed in the above Publication has insufficient heat dissipation and cannot provide sufficient reliability in actual use. Particularly, semiconductor light emitting elements are required to provide high power in recent years. If semiconductor light emitting elements provide high power, and the heat generation amounts also become large. Accordingly, there is a problem that cannot fill this requirement.

[0007] Therefore, the present invention is aimed at solving the aforementioned problems. It is a main object of the present invention to provide a light emitting device that has high reliability and can provide broad light emission.

[0008] To solve the above object, a light emitting device according to a first aspect of the present invention comprises a light emitting element, a pair of conductor members, a transparent board, and a transparent member. The pair of conductor members are spaced away from each other at an interval in a side-surface direction of the light emitting element and are electrically connected to the light emitting element. The transparent board supports the light emitting element and the pair of conductor members. The transparent member is located on the transparent board and seals the light emitting element and the pair of conductor members. The pair of conductor members are provided with a pair of metal plates that are secured thereon. The pair of metal plates project from the transparent member in directions different from each other.

[0009] In addition, each of the pair of metal plates can have rounded corners that are located on the edge side where the metal plate is secured on the conductor member. In addition, the contact area between the transparent board and the conductor member can be greater than the contact area between the conductor member and the metal plate. In addition, the lower surface of the transparent board can be a non-smooth surface. In addition, the metal plate can project in a substantially two-rectangular shape. Moreover, the apparatus can further have a second transparent member that covers the peripheries of the transparent member and the transparent board. In this construction, the second transparent member has a round shape.

[0010] According to a light emitting device of the present invention, it is possible to provide a high quality light emitting device that can provide a wide viewing angle and high reliability.

[0011] The above and further objects of the present invention as well as the features thereof will become more apparent from the following detailed description to be made in conjunction with the accompanying drawings.

BRIEF DESCRIPTION OF THE DRAWINGS

[0012] FIG. **1** is a cross-sectional view showing a light emitting device according to one embodiment of the present invention;

[0013] FIG. **2** is a plan view showing the light emitting device illustrated in FIG. **1**;

[0014] FIG. **3** is a plan view showing a light emitting device that has metal plates with rounded corners on edges of the metal plates;

[0015] FIG. **4** is a cross-sectional view showing a light emitting device with a transparent member being formed in a round shape;

[0016] FIG. **5** is a cross-sectional view showing a light emitting device with a transparent member being formed in a rectangular-parallelepiped shape;

[0017] FIG. **6** is a cross-sectional view showing a light emitting apparatus with a wavelength conversion member and a transparent member being formed unitarily;

[0018] FIG. **7** is a cross-sectional view showing a light emitting device with a wavelength conversion member and a sealing member being formed unitarily;

[0019] FIG. **8** is a cross-sectional view showing a light emitting device with a packaged light emitting device being installed in a side-up position in a transparent bulb;

[0020] FIG. **8** is an enlarged, perspective view showing an installation portion where the packaged light emitting device is supported by a support lead illustrated in FIG. **8**;

[0021] FIG. **10** is a cross-sectional view showing a light emitting device with a packaged light emitting device being installed in a top-side-up position in a transparent bulb;

[0022] FIG. **11** is an enlarged, perspective view showing an installation portion where the packaged light emitting device is supported by a support lead illustrated in FIG. **10**;

[0023] FIG. **12** is a cross-sectional view showing a light emitting device with a packaged light emitting device being installed through elongated conductor members in a transparent bulb;

[0024] FIG. **13** is a cross-sectional view showing a light emitting device with an optical lens being located on the lower side of a transparent board;

[0025] FIG. **14** is a plan view showing a light emitting device with a plurality of light emitting elements being arranged in a matrix shape;

[0026] FIG. **15** is a plan view showing a light emitting device with a plurality of light emitting elements being aligned in a longitudinal direction; and

[0027] FIG. **16** is a cross-sectional view showing a light emitting device with a lead region being separately provided.

DETAILED DESCRIPTION OF THE PREFERRED EMBODIMENT

Light Emitting Device

[0028] FIGS. **1** and **2** are views showing a light emitting device **100** according to a first embodiment of the present invention. FIG. **1** is a cross-sectional view showing the light emitting device **100**. FIG. **2** is a plan view showing the light emitting device **100**. FIG. **1** corresponds a cross-sectional view taken along the line I-I' of FIG. **2**. The light emitting device **100** illustrated in these Figures includes a light emitting element **10**, a transparent board **20**, a pair of conductor members **22**, a covering member **46**, and a pair of metal plates **30**. The transparent board **20** is provided with the light emitting element **10** that is mounted thereon. The pair of conductor members **22** are secured on the transparent substrate **20**. The covering member **46** is provided with the light emitting element **10** and the conductor members **22** that are located therein. The pair of metal plates **30** are inserted into the covering member **46** from side surfaces of the covering member **46**, and are located on the pair of conductor members **22**. This construction allows light from the light emitting element to outgo through a wide area. In addition, since the pair of metal plates project in directions different from each other, the light emitting device is stably fastened to terminals for power supply. Additionally, since the metal plates ensure heat dissipation, reliability and stability are also improved. An LED chip, an LD chip and so on can be employed as the light emitting element **10**. An LED chip in FIG. **1** is mounted on the transparent board **20** with a transparent die-bonding member **52** by die-bonding.

Transparent Board 20

[0029] In the present invention, the transparent board **20** has transmittance of 70% or more for light from the light emitting element **10**, and serves as a support board that conducts heat generated by the light emitting element **10** to the metal plates **30**. The light emitting element **10** is secured on the transparent board **20** with the transparent die-bonding member **52**. The transparent die-bonding member **52** helps light to outgo through the lower surface of the light emitting element **10**, and allows the light to pass the die-bonding member **52** and the transparent board **20**. Thus, the light can outgo. Sapphire, GaN, beryllium oxide (beryllia), ZnO, SiC, Si, ZnO, ZnS, Al, Cu, W, AlN, SiC, diamond, copper diamond, ruby, and single crystal or polycrystal of GaN, Si and so on can be employed as this heat conductive type of transparent board **20**.

[0030] Particularly, in the case where a conductive material is employed as the transparent board **20**, a mount surface of the light emitting element **10** can provide electrical connection. Only one of electrodes requires wire bonding. Accordingly, it is possible to reduce the number of wire lines **44** and manufacturing cost, and to improve yields. From this viewpoint, it is possible to enhance improvement in reliability. Particularly, the wire lines **44** may be disconnected inside the resin that covers the wire lines **44** due to the difference in the thermal expansion coefficient, or the like. Reduction of the number of the wire lines **44** that are used inside the resin can reduce this risk.

[0031] It is preferable, in order to facilitate outgoing of light, that the lower surface of the transparent board **20** is a non-smooth surface. In this case, light can easily outgo through the lower surface. For example, the lower surface of the transparent board **20** is not polished and remains as an irregular. Alternatively, stripes or dimples can be formed on the lower surface of the transparent board **20** on purpose. In the case where the transparent board **20** has the thus-formed lower surface, even if a transparent member is not additionally disposed on the lower side of the transparent board **20**, light that passes the lower surface of the light emitting element **10** can efficiently outgo. In addition, it is also preferable that the transparent board **20** has a curved lower surface. In this case, it is possible to reduce components of light that undergo total internal reflection at the lower surface of the transparent board **20**. Therefore, it is possible to provide a light emitting device with high light-outgoing efficiency.

[0032] In addition, in order to reduce reflection at the boundary between the light emitting element **10** and the transparent board **20**, it is preferable to adjust the refractive index difference between them. In the case where the light emitting element **10** has an element structure that is supported on a growth substrate, it is preferable that the refractive-index difference between the growth substrate and the transparent board **20** is small. Alternatively, the refractive index of the growth substrate is smaller than the refractive index of the transparent board **20**. When materials for them are thus determined, reflection of light can be small. For example, in the case where the light emitting element **10** has a semiconductor layer that is grown on a sapphire substrate, sapphire is preferably used as the transparent board. On the other hand, in the case where the light emitting element **10** is a GaN group semiconductor element that does not have a growth substrate, a transparent board formed of GaN is preferably used.

Die-Bonding Member 52

[0033] In this embodiment, a material of the die-bonding member **52** is not specifically limited, if it can secures the light emitting element **10** on the transparent board **20**, and

can passes light from the light emitting element **10**. An organic material, such as thermoplastic resin and thermosetting resin, an inorganic material, and a hybrid material of them can be used. Specifically, epoxy resin as thermosetting resin, acrylic resin and polyimide resin as thermoplastic resin, and so on can be given as examples. On the other hand, if the die-bonding member **52** is colored due to deterioration caused by light, heat and so on, the light-outgoing efficiency decreases. For this reason, the die-bonding member **52** preferably has heat resistance, light resistance and heat conductivity. In addition, in order to adjust the thermal expansion coefficient or electrical conductivity of the die-bonding member **52**, a filler can be added to these resins.

Metal Plate **30**

[**0034**] The metal plates **30** are inserted into the covering member **46** from side surfaces of the covering member **46**, and are fastened to the transparent board **20** so that the conductor member **22** is interposed between each of the metal plates **30** and the transparent board **20**. The metal plates preferably have rounded corners that are located on edge sides thereof as shown in the metal plate **30**B illustrated in the plan view of FIG. **3**. In this case, it is possible to relieve residual stress after being secured to the transparent board **20**. The metal plate **30** preferably formed of an excellent heat conductive and electrical conductive material with surfaces that are plated with a metal capable of reflecting light from the light emitting element **10**.

[**0035**] Copper, Kovar (trademark) as alloy of iron, nickel and cobalt, an alloy of Kovar and copper, and so on can be given as examples of excellent heat conductive material. Since these materials have heat conductivity higher than ordinary conductors, they can improve heat dissipation of light emitting device and facilitate higher power output. In the present invention, particularly, phosphor bronze is preferably used. Phosphor bronze has excellent corrosion resistance, wear resistance, plating characteristics, stress-and-corrosion cracking resistance, electrical conductivity and heat conductivity, and additionally has excellent processability in pressing, bending, drawing and so on.

[**0036**] In addition, prior to plating surfaces of the aforementioned material, it is preferable that copper strike plating is performed. In this case, oxides on the material are eliminated, and the material can be activated and plated at a time. Accordingly, the material is coated with a copper film with good tackiness. Therefore, it is possible to improve metal adhesiveness on the whole surfaces of material, and additionally to improve corrosion resistance. Additionally, the material metal is prevented from dissolution into a plating bath. Therefore, it is possible to prevent contamination in the bath.

[**0037**] It is preferable that the material, which is thus subjected to surface treatment, is plated with a metal that can reflects light from the light emitting element **10**. Particularly, it is preferable that the material is provided with a conductive film that has glossiness of 90 or more by plating. In this specification, glossiness is a value based on JIS Standard that is represented by specular reflection factor in percentage when light from the light emitting element **10** is incident at 60° and is measured by VSR300A small surface color-difference meter manufactured of Nippon Denshoku Industries Co., Ltd. wherein the surface of a glass with refractive index of 1.567 is defined as glossiness 0. Specifically, Au, Ag, Al, and so on, can be given as examples for plating main material. In addition, in the case where the metal plate **30** and the light emitting element **10** are electrically connected with the metal wire lines **44**, it is preferable that a main material for plating on the surface of the metal plate **30** is the same material as a main material with the metal wire lines **44**.

[**0038**] The metal plate **30** has a substantially rectangular-shaped end that is connected to the light emitting element **10** with the wire line **44**, and the other end that is exposed from the transparent member to be mounted to an external portion. In the light emitting device according to this embodiment, the other end has a two-rectangular shape that has a rectangle with the same width as the other end and a substantially square shape with a width wider than the other end as shown in a later-discussed metal plate **30**C illustrated in FIG. **14**, or the like. In this construction, it is possible to improve heat dissipation toward and installation on the external portion. In addition, corners of the substantially two-rectangular shape are preferably rounded. This shape provides ease of handling of the light emitting device. Additionally, a plate screw opening **31** can be formed in a region with wider area in the two-rectangular shape to fasten the light emitting device to the external portion. In this case, the light emitting device can be fastened to high thermally conductive metal or the like so as not to interpose an organic material between them.

[**0039**] The metal plates **30** are disposed on right and left sides of the light emitting element **10** and spaced away from each other at an interval, and are exposed from side surfaces of the covering member **46** that are opposed to each other. Thus, metal plates **30** can conduct heat from the light emitting element **10** through the transparent board **20** to effectively dissipate the heat externally. In the case where multiple light emitting elements are mounted, in the case where a light emitting element with positive and negative electrodes located on the same surface side is mounted in a flip-chip manner, or the like, conductive lines with a width narrower than the light emitting element may be disposed between the pair of metal plates. This construction can provide various types of mount manners without cutting off light that is emitted from the light emitting element and outgoes through the lower surface thereof. In addition, as discussed later, the metal plates **30** that extend in a right-and-left direction serve as attachment portions that are attached to a transparent bulb **60**.

Conductor Member **22**

[**0040**] The transparent board **20** and the metal plate **30** are welded. This welding is conducted by using the conductor member **22** that is previously formed on the transparent board **20**. It is preferable that the coat area of the conductor member **22** is smaller or larger than an adhesion surface between the transparent board **20** and the metal plate **30**. In other words, the adhesion surface preferably has a shape different from an alloy film surface. The reason is to reduce residual stress that is produced in the transparent board **20** after welding. Therefore, it is possible to provide highly reliable light emitting device. Particularly, in the case where the coat area of the conductor member **22** is larger than the adhesion surface between the transparent board **20** and the metal plate **30**, it is possible to reduce the aforementioned

residual stress while keeping adhesive strength in check. For this reason, it is preferable that the coat area of the conductor member **22** is larger than the adhesion surface. The conductor member **22** is preferably formed of a thermal conductive material that can relieve the difference between the thermal expansion coefficients of the transparent board **20** and the metal plate **30**. Specifically, tungsten, molybdenum or a mixture of copper and at least one element of them is preferably employed. The conductor **22** is preferably formed by printing.

[**0041**] In addition, it is preferable that the pair of conductor members **22** occupy 20% to 50% of the surface of the transparent board **20**. In the case of more than 50%, light outgoing efficiency decreases, and additionally the residual stress after the pair of conductor members **22** are adhered to the transparent board **20** is large. In the case of less than 20%, the pair of conductor members cannot be adhered to the transparent board **20** at enough adhesive strength. On the other hand, internal adhesion terminal portions of the pair of conductor members have 20% to 50% of thickness relative to thickness of the transparent board **20**. In the case of less than 20%, the residual stress after the pair of conductor members are adhered to the transparent board **20** is large. In the case of more than 50%, it is difficult that the pair of conductor members are adhered to the transparent board **20** at enough adhesive strength.

[**0042**] The die-bonding member **52** bonds the light emitting elements **10** and the transparent board **20**. A binder resin as an adhesive material bonds the transparent board **20** and the conductor member **22**. In addition, thermal conductivities at these boundaries can be maintained by improvement of thermal conductivities of the die-bonding member **52** and the binder resin. For example, in the case where powder alumina or diamond is mixed in the binder resin, the thermal conductivity of the binder resin is improved.

Covering Member **46**

[**0043**] After the light emitting element **10** and the conductor members **22** are secured on the transparent board **20**, and the necessary wire lines **44** are fastened by bonding or the like, the covering member **46** formed of a transparent resin covers the periphery of them. A silicone resin, which has excellent heat resistance and light resistance, can be suitably employed as the covering member **46**. In the illustration of FIG. **1**, a rectangular-parallelepiped-shaped silicone resin has a profile similar to the transparent board **20** located below the resin. The resin covers the light emitting element **10** on the transparent board **20**.

Second Transparent Member **40**

[**0044**] A second transparent member **40** can additionally cover the covering member **46**. FIG. **4** is a cross-sectional view showing a light emitting device **200** with the second transparent member **40** covering the covering member **46**. In the case where the second transparent member **40** has a round-shaped surface as shown in this Figure, light emitted from the light emitting element can be radiated through the round-shaped transparent member the without directivity. Particularly, the second transparent member **40** can serve as an optical lens. In this case, it is possible to provide a light emitting device that can uniformly radiate light in all directions. For example, the second transparent member **40** can be formed of a silicone resin, an epoxy resin, glass, or the like. In addition, the second transparent member **40** can be formed in any curved optical lens shape by transfer molding or the like.

[**0045**] On the other hand, it is not always necessary to form the second transparent member **40** in optical lens shape or other curved shapes such as round shape. For example, as shown in a light emitting device **300** of FIG. **5**, a second transparent member **40**B may have a rectangular-parallelepiped shape. In the case of rectangular-parallelepiped shape, there is an advantage that provides easy molding. In addition, in construction that attaches the light emitting device in the transparent bulb **60** as discussed later, the transparent bulb **60** can serve as an optical lens. Therefore, there is also an advantage that simplifies the construction of the transparent member **40**.

[**0046**] In addition, a wavelength conversion member **50** can be disposed around the periphery of the light emitting element **10** as shown in FIG. **4** as necessary. The wavelength conversion member **50** can absorb light emitted by the light emitting element **10** and convert its wavelength so as to emit luminescent radiation with different wavelength. A resin film or glass film containing a phosphor can be suitably used as this wavelength conversion member **50**. For example, in the illustration of FIG. **5**, the wavelength conversion member **50**B containing a phosphor is formed in a film shape on the surface of the transparent member **40** as a wavelength conversion film by coating. Thus, in the case where the transparent member is uniformly formed on the curved surface of the optical lens shape, uniform mixture light can be obtained. Additionally, a phosphor can be unevenly distributed in the wavelength conversion film depending on the number and arrangement of light emitting elements to be used. In other words, it is not necessary to provide the wavelength conversion member around the whole periphery of the light emitting element. The wavelength conversion member may be distributed so that a phosphor is highly weighted in regions where a light amount is high such as upper and lower surfaces.

[**0047**] In addition, the second transparent member **40** can additionally serve as the wavelength conversion member **50**. For example, as shown in a light emitting device **400** of FIG. **6**, a phosphor **48** can be mixed into an epoxy resin as the transparent member **40**C so that the transparent member **40**C serves as a wavelength conversion member. Alternatively, as shown in a light emitting device **400**B of FIG. **7**, a covering member **46**B can additionally serve as a wavelength conversion member. In other words, a phosphor **48** is mixed into a silicone resin that forms the covering member **46**B so that the covering member **46**B serves as both a covering member and a wavelength conversion member. In this case, it is possible to provide an effect that reduces the number of production processes and production cost. Additionally, the wavelength of light emitted from the whole surfaces including the lower surface in an LED chip can be converted by mixture of the phosphor **48** not only into the covering member **46**B but also into a die-bonding member **52**B, lamination coating on the periphery of the transparent board **20** with a phosphor film, or the like. Alternatively, construction in which a wavelength conversion layer is formed by applying a phosphor on the interior surface of a transparent bulb is also applicable.

Transparent Bulb **60**

[**0048**] Although a light emitting device **500**, which is constructed as discussed above, can be used alone, it can be attached to a lighting apparatus so that it is easily handled for lighting application. FIG. **8** is a cross-sectional view showing the transparent bulb **60** with the lighting apparatus **500** according to the present invention being disposed therein. The transparent bulb **60** is designed in a shape similar to a filament lamp but is provided with the lighting apparatus **500** instead of filament. The transparent bulb **60** is a light-bulb-shaped member that is composed of transparent glass or the like. A pair of support leads **62** are disposed inside the transparent bulb **60**. Ends of the pair of support leads **62** are provided with slots that accommodate external connection terminal portions of the metal plates **30** of the light emitting device. As shown in an enlarged, perspective view of FIG. **9**, in this illustration, the ends of the support leads **62** have recessed portions **63**. The metal plates **30** are inserted into the recessed portions **63** and are fastened with screws, or the like. For example, the metal plates **30** of the light emitting device **500** is provided with plate-side screw holes **31**B that open as shown in FIG. **9** to be fastened with the screws. On the other hand, the support leads **62** are also provided with lead-side screw holes **65** that are formed at locations corresponding to the plate-side screw holes **31**B. As shown in FIG. **8**, in the state where an LED chip of the light emitting device **500** faces to a side surface of the light emitting element **500**, the metal plates **30** are inserted into the recessed portions **63** so as to be located in place. Screws **66** are then inserted from a horizontal side into the plate-side screw holes **31**B and the lead-side screw holes **65** for threaded engagement. This engagement can ensure attachment of the light emitting device. Alternatively, even in the case where the support leads **62** are not provided with only the lead-side screw holes **65** without recessed portions, screws can be inserted into the plate-side screw holes and the lead-side screw holes to attach the light emitting device by threaded engagement. Attachment is not limited to threaded engagement, needless to say, other methods such as rivet, caulking, welding, bonding, retainment, engagement and fit can be used.

[**0049**] In addition, since the LED chip is attached so that its upper surface faces a side surface of the transparent bulb, there is an advantage that directly and outwardly directs light that outgoes through the upper and lower surfaces of the LED chip. In other words, in the case of a conventional LED, since light outgoes in one direction, a reflection film or reflector is disposed. This construction tends to enhance directivity. For this reason, there is a problem this type of LED is unsuitable for lighting application that requires broad light emission. Additionally, the reflection film or reflector does not allow light to outgo totally. In the case where the LED chip is oriented so that its upper surface faces a side surface of the lighting apparatus, light that outgoes through the upper and lower surfaces of the LED chip is directed outward as light output directly. Therefore, light from the LED chip can effectively outgo. This construction can eliminate a reflector and so on, and provide an advantage in cost. Additionally, this construction can avoid the problems that lose light due to a reflection member and enhances directivity. An LED chip typically emits light through not only its upper and lower surfaces but also through its side surfaces. In the light emitting device according to the present invention, light that is thus emitted by the light emitting element effectively outgoes through all surfaces. Therefore, it is possible to effectively radiate light through the side surfaces, and the upper and lower surfaces of the light emitting device.

[**0050**] On the other hand, as shown in FIG. **10**, the light emitting device can be attached so that the LED chip is oriented so that its upper surface faces the upper side of transparent bulb. In the light emitting device according to this embodiment, since light outgoes from the LED chip through all the peripheral surfaces such as the upper, lower and side surfaces, it is possible to provide broad light emission even in the case where the light emitting device is oriented in any directions. It is important to optimize elimination of a member that cuts off light from the LED chip, that is, to bring the LED chip closer to a suspended state inside a light emitting apparatus such as transparent bulb so that light emitted through all the peripheral surfaces of the LED chip can effectively outgo. This construction can provide a light emitting device that serves as a suitable lighting apparatus capable of illuminating a wide area. In the illustration of FIG. **10**, as shown in FIG. **11**, the ends of the support leads **62**B have recessed portions **63**B. The metal plates **30** are inserted into the recessed portions **63** and are attached with the screws **66** that are inserted from the top side by threaded engagement or the like.

[**0051**] In addition, the transparent bulb **60** is provided with a base **64** that can be threadedly engaged with a conventional socket for light bulb. Terminals of the base **64** are connected to the support lead **62**. The light emitting element **10** of the packaged light emitting apparatus **500** is constructed to be operated by power that is supplied to the terminals of the base **64**. In this case, this light emitting device can be used similarly to conventional light bulbs. Therefore, it is possible to easily replace a conventional light bulb used in lighting with the light emitting element. Particularly, the light emitting device, which employs an LED chip or the like, is operated at low power consumption and less heat generation. Additionally, the light emitting device has long life as compared with filament lumps. As a result, maintenance such as bulb replacement can be eliminated. The light emitting device is suitable for requirements for resource savings and trash reduction. Therefore, the light emitting device is very advantageous as next-generation lighting.

[**0052**] On the other hand, conventional light emitting elements such as LED have high directivity, and thus are not suitable in use as lighting that provides broad light emission. On the contrary to this, in the light emitting device, the transparent board **20** that is provided the light emitting element **10** mounted thereon passes light, and the transparent member **40** is formed around all the peripheral surfaces of the light emitting element **10**. This construction allows light to outgo through all the peripheral surfaces. Therefore, the light emitting device can be used for typical lighting application that provides broad light emission.

[**0053**] In addition, the transparent bulb **60** can have various types of designed shapes as lighting. The transparent bulb **60** can have a shape similar to conventional light bulbs so that they are replaced by the transparent bulb, and, needless to say, can have special-purpose designed shapes. For example, the transparent bulb can have a cylindrical shape. In addition, a phosphor layer may be applied as a

wavelength conversion member on the interior surface of this cylindrical-shaped transparent bulb. In this lighting apparatus, the packaged light emitting device that is deposed therein does not include a wavelength conversion member, but a coating that is mixed with a phosphor is applied on the interior surface of the transparent bulb as a wavelength conversion member. Alternatively, both the packaged light emitting device and the transparent bulb can have wavelength conversion members. Combination of wavelength conversion members that include a plurality of phosphors can provide two- or three-wavelength lighting, or the like, and thus can provide a desired light color.

[0054] In addition, the transparent bulb can be filled with a filling material, or can be formed in solid by molding. The LED chip and phosphor are protected from external stress, moisture, dust and so on by a filling member or molding. Particularly, in the case of a relatively small lighting apparatus, since a molding amount is small, a problem that increases its weight does not arise. In this case, this type of transparent bulb can be suitably used.

Support Lead **62**

[0055] The support leads **62** are formed of an excellent electrically and thermally conductive metal such as stainless steel alloy, iron, copper and aluminum. On the other hand, the support leads **62** can be preferably formed of the material as the metal plate **30**. In the case where the light emitting device **500** is electrically conductively and thermally conductively attached to the support lead **62**, the light emitting device **500** is provided with power through the support leads **62**, and heat generated in the light emitting device **500** is conducted to the support leads **62** and is dissipated.

[0056] Alternatively, as shown in FIG. **12**, metal plates **30**D of a packaged light emitting device **600** can be bent and extend so as to fastened to the inside of the base **63**. In this case, the metal plates **30**D serves as both the metal plates and the support leads. Therefore, it is possible to reduce a parts count, and the number of production processes.

[0057] The chamber of the transparent bulb **60** can contain air. But the chamber of the transparent bulb **60** may be air-tightly enclosed and filled with an inert gas or maintained under vacuum. For example, in the case where oxygen is eliminated from the chamber, it is possible to reduce deterioration due to oxidation of the metal plates **30** that project from the packaged light emitting device **500**. In this case, it is possible to improve reliability of the packaged light emitting device **500**.

[0058] On the other hand, the support leads **62**, which support the light emitting device **500** and are disposed inside the transparent bulb **60**, may provide detachable engagement of the light emitting device **500**. In this case, a light emitting device with reduced output power can be replaced, or a light emitting device can be replaced by another packaged light emitting device with different color light emission. This type of light emitting device is more convenient.

[0059] In the case where the packaged light emitting device is thus accommodated in the transparent bulb, it is not necessary to form the second transparent member that covers the light emitting element.

[0060] In the aforementioned illustrations, the metal plates **30** are disposed on the transparent board **20** in substantially mirror images of each other, and are connected with wire lines **44**. However, the metal plates **30** are not limited to this construction. In the illustration of FIG. **1** or the like, the light emitting element **10** has an insulating lower surface and an upper surface that is provided with n-side and p-side electrodes, and thus requires two wire lines **44**. However, in the case where a light emitting element has a lower surface that is provided with an electrode (e.g., n-side electrode), a transparent board can be formed of a conductive material. In this case, only one wire line, which is connected to its upper surface, can provide electrical conduction.

Light Emitting Element **10**

[0061] In this specification, light emitting elements such as LED and LD can be used as the light emitting element **10**. In this embodiment of the present invention, a light emitting element with wavelength 550 nm or less, preferably 460 nm or less, and more preferably 410 nm or less is used as the light emitting element **10**. For example, an ultraviolet light LED, which emits light with wavelength of 250 nm to 365 nm as ultraviolet light, can be used. For example, an LED chip that emits ultraviolet light can be used as the light emitting element **10** so that the wavelength conversion member **50** converts the ultraviolet light into visible light. In this specification, light is used in a sense that includes visible light and invisible light.

[0062] Various types of nitride semiconductors can be used as semiconductor layers, which compose an LED or an LD. Specifically, a plurality of layers that are formed of semiconductors such as $In_xAl_yGa_{1-x-y}N$ ($0 \leqq x$, $0 \leqq y$, $x+y \leqq 1$) are formed on a growth substrate by Metal-Organic Chemical Vapor Deposition (MOCVD), Hydride Chemical Vapor Deposition (HVPE), or the like. Generally, semiconductor layers grow on a particular growth substrate, and thus form an LED. For example, well-known materials such as sapphire, spinel, SiC, GaN and GaAs can be used as growth substrate. In the case where an insulating substrate such as sapphire is used, finally the insulating board may be removed.

[0063] In addition the main peak light emission wavelength of the light emitting element **10** can be varied within a range between 420 nm and 490 nm. Additionally, the light emission wavelength is not limited to the above range, but a light emitting element with wavelength of 360 nm to 550 nm can be used. Particularly, in the case where an ultraviolet LED light emitting device is employed for the light emitting device, the absorption-and-conversion efficiency of excitation light can be improved. Therefore, it is possible to reduce penetrating ultraviolet light.

Phosphor

[0064] A phosphor converts visible light or ultraviolet light that is emitted from the light emitting element **10** into light with different wavelength. In this case, the phosphor is used as a wavelength conversion material, which absorbs light and emits luminescent radiation with wavelength longer than the wavelength of absorbed light. Light emission of the light emitting element **10** and the converted radiation are mixed to emit desired color light externally. The phosphor is transparent, and is excited by light emitted from a semiconductor light emitting layer of LED, for example, and thus emits luminescent radiation. AYAG group phosphor activated by europium, zinc sulfide coactivated by silver and

aluminum, a nitride group phosphor such as alkaline-earth silicon-nitride phosphor, and an oxynitride group phosphor such as alkaline-earth silicon oxynitride phosphor can be used as preferable phosphor. In addition, a phosphor that is excited by ultraviolet light and emits luminescent radiation of a desired color may be used.

[0065] A phosphor that has the luminescent spectrum in a yellow, red, green or blue region due to excitation by light from the light emitting element **10** can be used. In addition, a phosphor that has the luminescent spectrum in the intermediate color region of them, such as yellowish green, bluish green and orange, can be also used. Various combinations of these phosphors can provide light emitting devices with various light emission colors.

[0066] For example, a phosphor consisting of $CaSi_2O_2N_2$:Eu or $SrSi_2O_2N_2$:Eu, which emits green to yellow luminescent radiation, $(Sr,Ca)_5(PO_4)_3Cl$:Eu, which emits blue luminescent radiation, and $(Ca,Sr)_2Si_5N_8$:Eu, which emits red luminescent radiation is used. In this case, it is possible to provide a light emitting device that emits white light and has excellent color rendering. The reason is that, since red, blue and green of the primary colors are used, variation of the composition ratio of first and second phosphors can provide desired white light.

[0067] The average particle size of phosphor is 3 μm or more, and preferably 5 μm to 15 μm. Very small phosphor is classified and removed by classification or the like so that particles with particle size of 2 μm or less occupy not more than 10% in volume distribution. Accordingly, light emission luminance can be improved. Additionally, chromaticity unevenness depending on light direction is reduced by reducing the number of particles with particle size of 2 μm or less.

[0068] In this case, the particle size means an average particle size that is obtained by an air permeation method. Specifically, the particle size is converted as average particle size from a relative surface area value that is obtained based on pressure difference, under environmental condition at temperature of 25° C. and humidity of 70%, in a state where air flows through a special tubular vessel at a constant pressure, wherein the vessel is provided with a sample of measured volume of 1 cm^3 that is packed therein. The phosphor used in the present invention preferably has an average particle size of 2 μm to 8 μm. In addition, it is preferable that phosphor particles with average particle size in this range are highly included. Additionally, particles are preferably distributed in a narrow range. It is preferable that there are few particles with particle size not more than 2 μm. In the case where a phosphor with small particle size and less unevenness of particle size distribution is used, color unevenness can be reduced. Therefore, it is possible to provide a light emitting device with an excellent color tone.

Wavelength Conversion Member **50**

[0069] The wavelength conversion member **50** containing a phosphor is composed of resin with the aforementioned phosphors mixed therein. A thermosetting resin can be used for phosphor-containing resin that composes the wavelength conversion member **50**. It is preferable that the phosphor is substantially uniformly contained in the phosphor-containing resin. However, a phosphor material may be unevenly mixed so as to partially exist. For example, a phosphor is distributed so that much of the phosphor material is included on the exterior surface side of the phosphor-containing resin. In this case, much of the phosphor is spaced away from a contact surface between the light emitting element **10** and the phosphor-containing resin, thus, heat generated by the light emitting element **10** is less prone to conducted to the phosphor. Therefore, it is possible to suppress deterioration of the phosphor. A silicone resin composition, a denatured silicone resin composition or the like is preferably used as the phosphor-containing resin. However, a transparent, insulating resin composition such as epoxy resin composition, denatured epoxy resin composition and acrylic resin composition or the like can be used. In addition, pigment, diffusion agent and so on can be mixed into the phosphor-containing resin.

[0070] It is preferable that the phosphor-containing resin is soft even after curing. Before curing, it is preferable that the phosphor-containing resin is liquid with low viscosity. The reason is that the phosphor-containing resin spreads over the periphery of the light emitting element **10**, and that the phosphor-containing resin fills interstices except that electrical connection parts between the light emitting element **10** that is mounted in a flip chip manner and lead terminals. In addition, the phosphor-containing resin preferably has adhesiveness. In the case where the phosphor-containing resin has adhesiveness, it is possible to improve adhesion between the light emitting element **10** and the transparent board **20**. The resin that has adhesiveness includes not only a material that provides adhesiveness at room temperature, but also a material that provides adhesiveness when predetermined heat and pressure are applied to the phosphor-containing resin. Additionally, in order to improve the adhesive strength, the phosphor-containing resin can be subjected to heat or pressure, or can be dried.

Diffusion Agent

[0071] In addition, a diffusion agent can be added to the phosphor-containing resin in addition to a phosphor. Specifically, barium titanate, titanium oxide, aluminum oxide, silicon oxide, and so on, can be suitably used as the diffusion agent. In this case, it is possible to provide a light emitting device with suitable directivity.

[0072] In this specification, the diffusion agent refers to a material that has a center particle size not less than 1 nm to less than 5 μm. The diffusion agent of not less than 1 nm to less than 5 μm excellently scatters light from the light emitting element **10** and phosphor, and thus suppresses color unevenness that tends to appear in the case where a phosphor with a large particle size is used. For this reason, this type of diffusion agent is suitably used. In addition, the spectral half-value width in light emission can be narrow. Therefore, it is possible to a light emitting device with high color purity. A diffusion agent of not less than 1 nm to less than 1 μm has a small interference effect on the wavelength of light from the light emitting elements **10**, but has high transparency, and additionally can increase viscosity of resin without reduction of luminous intensity.

Filler

[0073] In addition, a filler can be added to the phosphor-containing resin in addition to a phosphor. Specifically, materials similar to the diffusion agent can be used as a material of the filler. But, the filler has a center particle size

different from the diffusion agent. In this specification, the filler preferably has a center particle size of not less than 5 μm to not more than 100 μm. In the case where a transparent resin contains this type of filler, chromaticity unevenness of the light emitting device can be improved by light dispersion, and additionally thermal shock resistance of the transparent resin can be improved. Accordingly, it is possible to provide a highly reliable light emitting device that can prevent disconnection of wire lines **44** that connect light emitting element **10** and external terminals, detachment of the bottom surfaces of the light emitting element **10** from the bottom surface of the recessed portion of the package, and so on, even in use under high temperature. Additionally, the resin can be adjusted so as to have constant flowability for a long time. As a result, a sealing resin can be formed in a desired location. Therefore it is possible to mass-produce the light emitting devices at high yield.

[**0074**] In the case where the thus-constructed light emitting device is used, it is possible to provide a high degree of flexibility in designing, and thus to provide various types of designs. For example, a light emitting device **700** in a form shown in FIG. **13** can be constructed to satisfy functions or designs required in lighting applications. In the light emitting device **700** shown in FIG. **13**, an optical lens **40**D is disposed only on the lower side of the transparent board **20**. Light that passes through the transparent board **20** can outgo in a light emitting element **10** mount direction. In this construction, light that outgoes in various directions can be directed in one direction. Therefore, it is possible to provide a light emitting device that can emit light at high luminance.

[**0075**] Although the light emitting device is constructed so that the wavelength conversion member **50** is located around the light emitting element **10** in the foregoing illustration, a light emitting device that does not have a wavelength conversion member can be constructed so as to emit light from the light emitting device directly as it is. For example, a blue, yellow, green lighting device or the like that includes a blue, yellow or green LED car be provided.

[**0076**] The light emitting device that includes single LED chip is discussed in the foregoing illustration. However, a plurality of the light emitting elements **10** can be used. For example, as shown in a plan view of FIG. **14**, a light emitting device **1200** includes four LED chips **10**C. Two LED chips among the LED chips **10**C are connected in serial as one set between a pair of metal plates **30**C. Two sets in which the two LED chips **10**C are connected in serial are electrically connected in parallel. In this case, it is possible to increase output power. In addition, as shown in a plan view of FIG. **15**, a light source can have a plurality of LED chips **10**D that align in a line that extends in a filament-longitudinal direction. In illustration of FIG. **15**, twelve LEDs **10**D align in the horizontal direction. Six LEDs among them are connected in serial as one set. Two sets in which the six LEDs of them are connected in serial are connected in parallel. Additionally, in order to provide easy connection by wire-bonding, lead regions **23** extend from respective conductor members **22**D in proximity to the center of the light source. Moreover, as shown in FIG. **16**, common lead region **23**B may be independently disposed the center of light source so that LED chips **10**E are connected to the common lead region **23**B by wire-bonding.

[**0077**] According to this embodiment, it is possible to provide a lighting apparatus that uses the light emitting element **10** and thus has high performance. In conventional light emitting devices, an LED chip is mounted on the metal plate **30**, thus, there is a problem that cuts off light that travels downwardly by the conductor **22** member. On the contrary to this, the lower surface light emission region of the light emitting element **10** is not disposed directly on the conductor member **22**. In other words, the conductor members **22** are not located so as to face the upper and lower surfaces as the largest surfaces of LED chip that composes the light emitting element **10**, but the conductor members **22** are located on the side-surface sides of the LED chip. This arrangement allows light to outgo downwardly.

[**0078**] Generally, since an insulating board is used as a board that is provided with the light emitting element **10** mounted thereon, this type of board has poor heat conductivity, and thus provides insufficient heat dissipation. If this type of light emitting element **10** is enclosed in a glass bulb as it is, temperature rises, thus, its reliability decreases. In this embodiment, the light emitting element **10** is disposed on the transparent board **20**, thus, its heat conductivity and heat dissipation are improved. In addition, in the case where the transparent board **20** is electrically conductive, this construction provide great improvement of heat conductivity. Thus, the light emitting element **10** with high output power can be stably used. Therefore, it is possible to provide high performance and high reliability.

[**0079**] A light emitting device according to the present invention can be applied to a light source for lighting, an LED display, a back light source, a signal light, an illuminated switch, various sensors, various indicators and so on, which have a blue or ultraviolet light emitting diode as a light source and has excellent white light emission, for example. A method for producing can be applied to them.

[**0080**] It should be apparent to those with an ordinary skill in the art that while various preferred embodiments of the invention have been shown and described, it is contemplated that the invention is not limited to the particular embodiments disclosed, which are deemed to be merely illustrative of the inventive concepts and should not be interpreted as limiting the scope of the invention, and which are suitable for all modifications and changes falling within the spirit and scope of the invention as defined in the appended claims.

[**0081**] The present application is based on Application No. 2005-364127 filed in Japan on Dec. 16, 2005, the content of which is incorporated herein by reference.

What is claimed is:

1. A light emitting device comprising:

a light emitting element;

a pair of conductor members that are spaced away from each other at an interval in a side-surface direction of the light emitting element and are electrically connected to the light emitting element;

a transparent board that supports the light emitting element and the pair of conductor members; and

a transparent member that is located on the transparent board and seals the light emitting element and the pair of conductor members, wherein

the pair of conductor members are provided with a pair of metal plates that are secured thereon, and the pair of metal plates project from the transparent member in directions different from each other.

2. The light emitting device according to claim 1, wherein each of the pair of metal plates has rounded corners that are located on the edge side where the metal plate is secured on the conductor member.

3. The light emitting device according to claim 1, wherein the contact area between the transparent board and the conductor member is greater than the contact area between the conductor member and the metal plate.

4. The light emitting device according to claim 1, wherein the lower surface of the transparent board is a non-smooth surface.

5. The light emitting device according to claim 1, wherein the metal plate projects in a substantially two-rectangular shape.

6. The light emitting device according to claim 1 further comprising a second transparent member that covers the peripheries of the transparent member and the transparent board, wherein the second transparent member has a round shape.

* * * * *