IN THE UNITED STATES DISTRICT COURT
FOR THE NORTHERN DISTRICT OF OHIO

FEIT ELECTRIC COMPANY, INC., *Plaintiff,* *v.* SAVANT TECHNOLOGIES LLC d/b/a GE LIGHTING, *Defendant,*	Civil Action No. 1:24-cv-00473-BMB

DEFENDANT SAVANT TECHNOLOGIES LLC'S
OPENING CLAIM CONSTRUCTION BRIEF

TABLE OF CONTENTS

I. INTRODUCTION 1

II. THE ASSERTED PATENTS 1

III. LEGAL STANDARD 1

A. Construing a patent claim under *Markman* and *Phillips* 1

B. Indefiniteness 3

IV. TERMS FOR CONSTRUCTION 3

A. "improves an off-state [OFF state] white appearance of the wavelength conversion component" ('678 Patent, Claims 1, 19, 29) / ('539 Patent, Claim 20) 3

1. The Asserted Patents provide no objective boundaries for the claimed improvement 3

2. The term "improves" is improperly subjective 6

B. "scatter the excitation light" "relatively more" / "at least twice as much" ('678 Patent, claims 11, 12) / ('539 Patent, claims 1, 18, 28) 8

C. "average particle size" ('678 Patent, claim 21) / ('539 Patent, claim 1, 18, 28) 10

D. "light mixing chamber" ('678 Patent, claim 29) / ('539 Patent, claim 28) 13

E. "planar shapes" ('678 Patent, Claim 25) / ('539 Patent, Claim 24) 18

V. CONCLUSION 21

TABLE OF AUTHORITIES

Cases **Page(s)**

AllVoice Computing PLC v. Nuance Communications, Inc.,
504 F.3d 1236 (Fed. Cir. 2007) 20

Aspex Eyewear, Inc. v. Marchon Eyewear, Inc.,
672 F.3d 1335 (Fed. Cir. 2012) 20

AstraZeneca AB v. Mylan Pharms. Inc.,
19 F.4th 1325 (Fed. Cir. 2021) 17

Datamize, LLC v. Plumtree Software, Inc.,
417 F.3d 1342 (Fed. Cir. 2005) 6

Davis-Lynch, Inc. v. Weatherford Int'l, Inc.,
No. 6:07-CV-559, 2009 WL 1097510 (E.D. Tex. Apr. 20, 2009) 17

Dow Chem. Co. v. Nova Chemicals Corp. (Canada),
803 F.3d 620 (Fed. Cir. 2015) 5, 6, 10, 12

Kyowa Hakka Bio, Co., Ltd. v. Ajinomoto Co.,
No. 17-313, 2020 WL 3403207 (D. Del. June 19, 2020) 12

Liquid Dynamics Corp. v. Vaughan Co., Inc.,
355 F.3d 1361 (Fed. Cir. 2004) 2

Markman v. Westview Instruments, Inc.,
52 F.3d 967 (Fed. Cir. 1995) (*en banc*), *aff'd*, 517 U.S. 370 (1996) 1

Nautilus, Inc. v. Biosig Instruments, Inc.,
572 U.S. 898 (2014) 3, 6

O2 Micro Int'l. Ltd. v. Beyond Innovation Tech. Co., Ltd.,
521 F.3d 1351 (Fed. Cir. 2008) 1

Otsuka Pharm. Co. v. Torrent Pharms. Ltd., Inc.,
151 F. Supp. 3d 525 (D.N.J. 2015) 11, 12

Phillips v. AWH Corp.,
415 F.3d 1303 (Fed. Cir. 2005) (*en banc*) 1, 2

Saso Golf, Inc. v. Nike, Inc.,
843 F. App'x 291 (Fed. Cir. 2021) 8

Teva Pharm. USA, Inc. v. Sandoz, Inc,
789 F.3d 1335 (Fed. Cir. 2015) 9, 10, 12

Statutes

35 U.S.C. § 112(2) 3

I. INTRODUCTION

Savant's constructions stay true to the evidence and follow the relevant case law. Several claim terms are indefinite because the specification fails to provide objective boundaries, particularly for terms that are entirely subjective.

Feit does not offer any constructions, and instead hides behind the "plain and ordinary meaning" for all of the disputed terms.

II. THE ASSERTED PATENTS

The two patents asserted by Feit here, U.S. Patent Nos. 8,604,678 (Ex. 1)[1] and 8,614,539 (Ex. 2) share the specification and the parties propose essentially the same set of terms for construction. Indeed, Dr. Schubert provided an expert declaration directed to the disputed terms in the '539 Patent that was almost an identical copy of his opening expert declaration regarding the disputed terms in the '678 Patent.

Attached as Exhibit 3 is a chart that organizes the disputed terms in both patents together. These disputed terms are briefed together below, with citations to the '678 Patent.

III. LEGAL STANDARD

A. Construing a patent claim under *Markman* and *Phillips*

The meaning of the terms of a patent claim (claim construction) is a matter of law determined by the Court and forms part of the instructions to the jury. *Markman v. Westview Instruments, Inc.*, 52 F.3d 967, 979 (Fed. Cir. 1995) (*en banc*), *aff'd*, 517 U.S. 370 (1996). The purpose of claim construction is to "determin[e] the meaning and scope of the patent claims

[1] The exhibits referenced herein are attached to the Declaration of Jonathan Auerbach, filed concurrently herewith.

asserted to be infringed" *O2 Micro Int'l. Ltd. v. Beyond Innovation Tech. Co., Ltd.*, 521 F.3d 1351, 1360 (Fed. Cir. 2008), so that the jury can apply them to the facts of the case. *See Markman*, 517 U.S. at 388-89 ("The construction of written instruments is one of those things that judges often do and are likely to do better than jurors unburdened by training in exegesis. Patent construction in particular 'is a special occupation, requiring, like all others, special training and practice. The judge, from his training and discipline, is more likely to give a proper interpretation to such instruments than a jury; and he is, therefore, more likely to be right, in performing such a duty, than a jury can be expected to be.'").

Claim construction begins with the language of the claim and asks "how a person of ordinary skill in the art understands a claim term." *Phillips v. AWH Corp.*, 415 F.3d 1303, 1313 (Fed. Cir. 2005) (*en banc*). "[I]n interpreting an asserted claim, the court should look first to the intrinsic evidence of record, i.e., the patent itself, including the claims, the specification and, if in evidence, the prosecution history. Such intrinsic evidence is the most significant source of the legally operative meaning of disputed claim language." *Liquid Dynamics Corp. v. Vaughan Co., Inc.*, 355 F.3d 1361, 1367 (Fed. Cir. 2004). Intrinsic evidence is particularly important because "the person of ordinary skill in the art is deemed to read the claim term not only in the context of the particular claim in which the disputed term appears, but in the context of the entire patent, including the specification." *Phillips*, 415 F.3d at 1313. However, in looking to the intrinsic evidence, the court should be careful to avoid importing limitations from the specification into the claims. *Id*. at 1323.

In addition to intrinsic evidence, a court may rely on extrinsic evidence, such as dictionaries or expert testimony, as a less important source of evidence to provide background on

the technology at issue or to explain the meaning of a common term as it would have been understood by a person of ordinary skill in the art ("POSA") at the time of the invention. *See id.* at 1317-18.

B. Indefiniteness

A claim must "particularly point[] out and distinctly claim[] the subject matter which the inventor [] regards as the invention." 35 U.S.C. § 112(2). It fails do so if, when read in light of the specification and the prosecution history, it "fail[s] to inform, with reasonable certainty, those skilled in the art about the scope of the invention." *Nautilus, Inc. v. Biosig Instruments, Inc.*, 572 U.S. 898, 900 (2014).

IV. TERMS FOR CONSTRUCTION

A. "improves an off-state [OFF state] white appearance of the wavelength conversion component" ('678 Patent, Claims 1, 19, 29) / ('539 Patent, Claim 20)

Feit Electric's Proposed Construction	Savant's Proposed Construction
Plain and ordinary meaning	Indefinite

The term "improves an off-state white appearance of the wavelength conversion component" fails to inform a POSA, with reasonable certainty, of the scope of the invention because it provides no objective boundaries and is purely subjective.

1. The Asserted Patents provide no objective boundaries for the claimed improvement

The Supreme Court has taught that a patent claim must provide "objective boundaries for those of skill in the art" or else it runs afoul of the definiteness requirement. *Nautilus*, 572 U.S. 898 & n.8.

The '678 and '539 Patent claims do not specify what level of "improve[ment]" of the

"off-state white appearance" of the wavelength conversion layer falls within the claim. Nor do they provide any standard or baseline against which to compare the claimed "improvement." As Savant's expert, Dr. Doolittle, explains, "[i] f the wavelength conversion component appears less yellow, but still yellow, does that constitute an improvement in the 'off-state white appearance,' even though the wavelength conversion component still does not appear white? The claims are silent." Ex. 4 ¶ 68.

The specification likewise fails to provide guidance. It discusses prior art devices that appeared yellow due to ambient light activating the phosphor in the wavelength conversion component when the device (and the LEDs) were off, resulting in the emission of yellow light. Ex. 4 ¶ 70; Ex. 1, 11:4-10. The specification then discloses a light diffusing layer that "improve[s] the visual appearance of the device in an OFF state to an observer," Ex. 1, 11:19-27, by reducing the amount of ambient light that reaches the phosphor when the device is off, resulting in the device having "**more of a white appearance** in an OFF state" since the phosphor "is emitting less yellow/red light," *id.* at 11:33-36 (emphasis added). *See also* Ex. 4 ¶ 71.

But the specification does not disclose to a POSA **how** to determine whether the off-state white appearance is improved. There is no baseline to measure against, no examples of prior art devices, or pictures of an embodying device. Ex. 4 ¶ 72. Instead, the specification repeatedly just states that the "appearance" is "improved," without quantifying or otherwise describing the improvement. *See, e.g.*, Ex. 1 at 3:15-19, 6:39-41, 11:19-27, 18:57-60, 20:3-7, 21:56-61, 22:45-48, 23:8-11, 24:2-5, 24:35-39, 25:61-67.

Feit and Dr. Schubert's "plain and ordinary meaning" of the term, that "the light diffusing layer produces an off-state appearance of the wavelength conversion component that is **whiter**

than an off-state appearance of a wavelength conversion component without the light diffusing layer," does not remedy the term's defect. Ex. 6 ¶ 13. Dr. Schubert opines that because the patent discloses prior art devices that appeared yellow or orange and that a white color appearance was desirable, a POSA would be able to understand the claimed "improvement." *Id.* ¶¶ 14-19.

But what Dr. Schubert is doing here is an impermissible re-writing of the claim. The claim does **NOT** claim "a wavelength conversion component that **appears white** in the device's off state." If it did, then perhaps Dr. Schubert's comparison of the prior art yellow and orange wavelength conversion components would make sense. Instead, the claim explicitly requires that the off-state white appearance be "improved" by the light diffusion layer. The fact that the patent discloses prior art yellow and orange wavelength conversion components does not inform a POSA as to what constitutes an "improvement" of the off-state white appearance. Ex. 4 ¶ 72.

The specification also fails to disclose whether the alleged improvement must be readily perceptible by a person or merely analytically perceptible. Ex. 4 ¶ 74. If the latter, is it enough to scatter 1 or 2 photons of light, compared to the millions or billions of photons a second needed for human perceptibility? *Id.*

Dr. Schubert attempts to answer the question by arguing that only human perceptibility is required, and argues that "the [l]evel of quantification sought by Dr. Doolittle is unnecessary because the OFF-state color change is readily apparent when viewed in the context of the '678 Patent." Ex. 6 ¶ 19. But how that "color change" is "readily apparent," Dr. Schubert does not say. And neither do the '678 or '539 Patents. The specification's failure to disclose how to determine whether the off-state white appearance is "improved" is fatal to these claims. *See*

Dow Chem. Co. v. Nova Chemicals Corp. (Canada), 803 F.3d 620, 634 (Fed. Cir. 2015) (finding term "slope of strain hardening coefficient" indefinite where there were at least four different methods of measuring the slope and "[n]either the patent claims nor the specification here discusses the four methods or provides any guidance as to which method should be used or even whether the possible universe of methods is limited to these four methods").

2. The term "improves" is improperly subjective

Because the Asserted Patents provide no objective measure, the claim term "improves" is necessarily subjective.

The Federal Circuit's decision in *Datamize, LLC v. Plumtree Software, Inc.* is instructive.[2] 417 F.3d 1342 (Fed. Cir. 2005). There, the term at issue was "aesthetically pleasing." The Federal Circuit noted that the term "does not just include a subjective element, it is completely dependent on a person's subjective opinion. *Id.* at 1350. The *Datamize* court found that "[t]he scope of claim language cannot depend [on the] particular individual purportedly practicing the invention" and that "[s]ome objective standard must be provided in order to allow the public to determine the scope of the claimed invention." *Id.* The Federal Circuit concluded that "[w]hile beauty is in the eye of the beholder, a claim term, to be definite, requires an objective anchor." *Id.*[3]

Dr. Schubert brushes aside the term's subjectivity issue by collapsing the inquiry into

[2] Although *Datamize* was decided prior to *Nautilus*, the rationale employed by the court in *Datamize* to find the term "aesthetically pleasing" indefinite comports with the standards set forth in *Nautilus*. *Datamize*, 417 F.3d at 1350 (finding "the absence of a workable objective standard").

[3] For example, some consumers might prefer a light bulb that emits soft white or yellowish white light compared to a "bright white" light bulb. Thus, the "white appearance" here is not necessarily "improved" merely by making the light appear white or whiter.

whether the off-state appearance is white. Ex. 6 ¶ 19 ("a POSA would understand. . . there is a color distinction between a yellow or orange phosphor and a white phosphor. This distinction is the claimed 'improvement.'"). But again, the term requires an "improvement" in the "off-state white appearance," not that the off-state appearance **be** white. By using the term "improves," the claim introduces subjectivity into the infringement inquiry. Unlike marketing materials for tooth whiteners, which provide before and after photos, the '678 and '539 Patents provide no context, criteria, or "objective anchor" to determine whether the appearance of the wavelength conversion layer has been "improved."

Even assuming that some color change must be perceived by a person, whether the off-state white appearance has been "improved" may vary from one person to another. Ex. 4 ¶ 75. As the Federal Circuit found in *Datamize*, "the identity of who makes aesthetic choices fails to provide any direction regarding the relevant question of how to determine whether that person succeeded in creating an 'aesthetically pleasing' look and feel for interface screens." 417 F.3d at 1350. Whether an LED light source appears more or less "white" in an off state depends on one's vision, what sort of ambient light is illuminating the LED light source, the granularity of the comparison, and other factors that are not defined. Ex. 4 ¶¶ 74-75. What if a hypothetical filament goes from orange to yellow, or from sunflower yellow to butter yellow? Or what if that filament goes from a colder (blueish) white to a warmer (yellowish) white? Are those covered "improvements"? The Asserted Patents provide no way of determining.

Accordingly, the "improves an off-state white appearance" terms fail to satisfy *Nautilus*'s requirement of "objective boundaries for those of skill in the art," and are therefore indefinite.

B. "scatter the excitation light" "relatively more" / "at least twice as much"[4] ('678 Patent, claims 11, 12) / ('539 Patent, claims 1, 18, 28)

Feit Electric's Proposed Construction	Savant's Proposed Construction
Plain and ordinary meaning	Indefinite

These terms also fail to inform a POSA, with reasonable certainty, of the scope of the invention.

For example, Claim 11 of the '678 Patent claims "the light scattering material will scatter the excitation light **relatively more** than the light scattering material will scatter light generated by the at least one photoluminescence material."

Claim 12 of the '678 Patent claims "The component of claim 11, wherein the light scattering material scatters the excitation light **at least twice as much** as light generated by the at least one photoluminescence material."

But neither the claim language nor the patent provide guidance or objective criteria on how to measure the scattering required by the claim. As Dr. Doolittle explains, the only "measurements" with respect to light scattering are found in Figure 10. Ex. 4 ¶¶ 78-79. But there is no explanation for how this theoretical data was created or calculated, nor how a POSA would make or calculate actual measurements to determine the scope of the claim.

Indeed, given that the "measurements" in Figure 10 are from a theoretical model created by a third party (and not the Asserted Patents' inventors), there is inherent uncertainty that is not reflected in the figure. Ex. 4 ¶ 80. Should a POSA run his or her own theoretical model, like the patent's inventors relied upon (when they incorporated Figure 10 from public product marketing

[4] The various permutations of these terms are found in Ex. 3.

material), or should a POSA measure the scattering in the actual product? *Id.* The specification is silent.

Similarly, once a measurement method is selected (either theoretical or actual), the specification is also silent as to how to take those measurements. Ex. 4 ¶ 81. For example, the specification provides no guidance on how a POSA is to account for all of the scattered light that is not observable in an external light collection system. *Id*.

The Asserted Patents' complete lack of disclosure with respect to the claimed light scattering thus renders the terms indefinite. *See Saso Golf, Inc. v. Nike, Inc.*, 843 F. App'x 291, 297 (Fed. Cir. 2021) (non-precedential) (finding claim term requiring a specific radius of curvature indefinite where "[t] here are multiple methods of calculating the radii of curvature because the calculations depend on pinpointing the locations of the toe and heel[, n]othing in the record indicates that an artisan would inherently know the locations of those boundaries and the patent provides no guidance[, and t]he scope of the claim depends on these measurements").

Feit and Dr. Schubert have no response to Figure 10's deficiency. Their answer is to merely point to the figure as a circular QED, and argue that direct measurement of light scattering is "not always necessary" because of the data presented in Figure 10. Ex. 6 ¶ 24 ("Figure 10 shows the distinction between light scattering of different colors."); ¶ 26 ("Figure 10 shows the relationship between scattering and particle size. Thus, if one employs a specific particle size as specified by Figure 10, the relative scattering can be determined."). But nowhere does Dr. Schubert address or even acknowledge that Figure 10 is a theoretical curve, with modeled data sourced from a third party and not from the putative inventors of the '678 Patent. Ex. 4 ¶¶ 58, 78-79; Ex. 6 ¶¶ 22-29. According to Dr. Schubert, the only thing needed is to

measure the average particle size (which, as discussed below, has its own issues), and then find the amount of relative scattering at that particle size. But as Dr. Doolittle explains, Figure 10's "data" is not as straightforward as it pretends to be.

C. "average particle size" ('678 Patent, claim 21) / ('539 Patent, claim 1, 18, 28)

Feit Electric's Proposed Construction	Savant's Proposed Construction
Plain and ordinary meaning	Indefinite

The term "average particle size" is indefinite because different methods of determining particle size produce different results, depending on the method of measurement (and parameters chosen for use with that method), and the Asserted Patents do not offer any guidance to a POSA on how to measure the "average particle size."

In *Teva Pharm. USA, Inc. v. Sandoz, Inc.* (post-*Nautilus*), the Federal Circuit held that a claim is indefinite when it recites a measured property, and the intrinsic evidence does not convey with reasonable certainty how to measure that property. 789 F.3d 1335, 1337–38 (Fed. Cir. 2015). The *Teva* claims related to a polymer "having a molecular weight of about 5 to 9 kilodaltons." *Id.* at 1338 (emphasis removed). The specification did not define "molecular weight," three different measures existed, and the claim language did not indicate which to use. *Id.* at 1344. Each method of measurement was calculated in a different manner and resulted in different values. *Id.* at 1338. The patentee claimed that the specification pointed to the use of only one of the three methods. *Id.* at 1341. However, the file histories of related patents pointed to the other methods. *Id.* at 1343–44. The court determined that even if a POSA accepted that the specification was directed to one method, a POSA would "still not be reasonably certain in light of the entire [intrinsic] record." *Id.* at 1345. The intrinsic evidence as a whole did not

convey to a POSA which method to use with reasonable certainty, and thus the claims were indefinite. *Id.* at 1344–45. *See also Dow Chemical Co. v. Nova Chemicals Corp.*, 803 F.3d 620, 633 (Fed. Cir. 2015) (finding claims reciting "a slope of strain hardening coefficient greater than or equal to 1.3" were indefinite because the patent failed to convey with reasonable certainty where and how the claimed "slope" should be measured).

Claim 21 of the '678 Patent claims "The device of claim 19 in which the light scattering material within the light diffusing layer corresponds to an average particle size that improves the OFF state white appearance of the wavelength conversion component." Claim 1 of the '539 Patent claims "an average particle size that is selected such that the light scattering material will scatter excitation light from a radiation source relatively more than the light scattering material will scatter light generated by the at least one photoluminescence material."

The claim thus requires an "average particle size," a measured property, and this measured property corresponds to either an improvement of the off-state white appearance or a relative amount of light scattering.

As Dr. Doolittle discusses, there are different methods of measuring the average particle size of particles in a particular sample. Ex. 4 ¶ 90. These methods include microscopy, laser diffraction, image analysis, and sieving. But the Asserted Patents do not recite or even suggest which specific methods for determining the particle size should be used. Each of these methods generates a different mean diameter or size. Ex. 4 ¶ 96. Further, depending on the size distribution of the particles, it is possible to have an "average" particle size in the sample without any of the particles actually having that particle size. Ex. 4 ¶ 97.

Dr. Schubert argues that "a POSA would understand that there are various advantages

and disadvantages to utilizing any particular methodology," and "[t]hat such advantages and disadvantages exist does not mean that a POSA would fail to understand the meaning of the term 'average particle size.'" Ex. 6 ¶ 36. But Dr. Schubert misses the point. He fails to acknowledge that the different measurement methods yield different *results* for the average particle size, and he ignores that the patent's silence on which measurement technique to uses means that a POSA is left guessing what technique to use.

District courts have held terms of measurement like "average particle size" are indefinite in similar circumstances, where the intrinsic evidence offered conflicting or no guidance on which measurement method to use. For example, in *Otsuka Pharm. Co. v. Torrent Pharms. Ltd., Inc.*, the district court held on claim construction that "median particle size" was indefinite. 151 F. Supp. 3d 525, 549 (D.N.J. 2015). *Otsuka* argued that the patent-in-suit revealed that "mean particle size" as recited in the independent claims referred to "volume mean particle size." *Id.* at 544. The court explained: "*Otsuka* points to a narrow portion of the specification that identifies a laser diffraction particle size analyzer, and then to asserted dependent claims 15 and 16, both of which contain the limitation that the 'mean particle size [be] measured using a laser diffraction particle size analyzer.'" *Id.* at 546. *Otsuka* argued that a POSA would, based upon industry literature, understand the claimed reference to "particle size analysis via laser diffraction methods" as an instruction to construe "mean particle size" as "volume mean particle size." *Id.* The *Otsuka* court rejected these arguments and held that "median particle size" was indefinite by analogy to *Teva* and *Dow* (discussed above). *Id.* Multiple methods existed to determine median particle size, and the specification did not lead a POSA to specific method. *Id.* at 548–49. *Otsuka* was affirmed by the Federal Circuit without opinion. The court in *Kyowa Hakka Bio,*

Co., Ltd. v. Ajinomoto Co., reached a similar conclusion. No. 17-313, 2020 WL 3403207, at *6–7 (D. Del. June 19, 2020) (finding "average particle size" indefinite where there were multiple ways to measure particles, and the specification and prosecution history offered conflicting guidance as to the proper measurement technique).

Indefiniteness is clearer here than in *Otsuka*. At least there, the specification disclosed laser diffraction. *Otsuka*, 151 F. Supp. 3d at 546–47. Here, however, the Asserted Patents offer no guidance whatsoever as to the proper measurement method or technique. Ex. 4 ¶ 89.

Thus, similar to *Teva*, the claim allows for a variety of measurement methods that yield substantively different results and is therefore invalid as indefinite. *Id.* ¶¶ 96-99.

D. "light mixing chamber" ('678 Patent, claim 29) / ('539 Patent, claim 28)

Feit Electric's Proposed Construction	Savant's Proposed Construction
Plain and ordinary meaning	an interior volume separate from the wavelength conversion component

The parties dispute whether the "light mixing chamber" is an interior volume separate from the wavelength conversion component, or whether the "light mixing chamber" can include a "chamber" where the wavelength conversion layer fills the interior volume.

Claim 29 of the '678 Patent and claim 28 of the '539 Patent, which are directed to a "light bulb," claim, in relevant part, "a wavelength conversion component having a three-dimensional shape that is configured to enclose the one or more solid-state light emitters and to in part at least define a light mixing chamber." Thus, the wavelength conversion component must "define a light mixing chamber" "in part."

The specification discusses numerous embodiments comprising a "wavelength conversion component and body of [the] light emitting devices define an interior volume

wherein the light emitters are located." Ex. 1, 24:52-54. The specification discloses that "[t]he interior volume may also be referred to as a light mixing chamber." *Id.*, 24:54-55. The specification discloses that "an interior volume 1029 is defined by the wavelength conversion component 36', 700, the light reflective chamber mask 1015, and the body of the downlight 1001." *Id.*, 24:57-60. This is shown in Figure 20C and 21C, which are reproduced below and which have been annotated by Dr. Doolittle. These figures show how the wavelength conversion component 36' and 700 (in yellow) in part define the light mixing chamber 1029. Ex. 4 ¶ 102.[5]

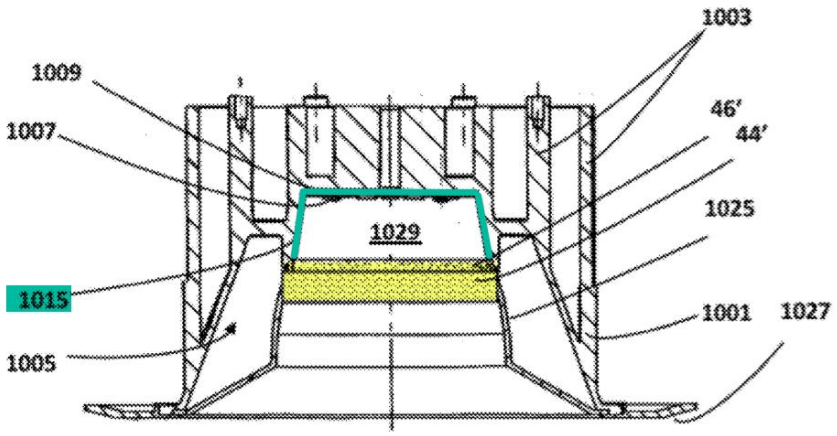

FIG. 20C

[5] As depicted in these figures, and as discussed in the specification, the light mixing chamber is further defined by the light reflective chamber mask 1015, which is annotated in green.

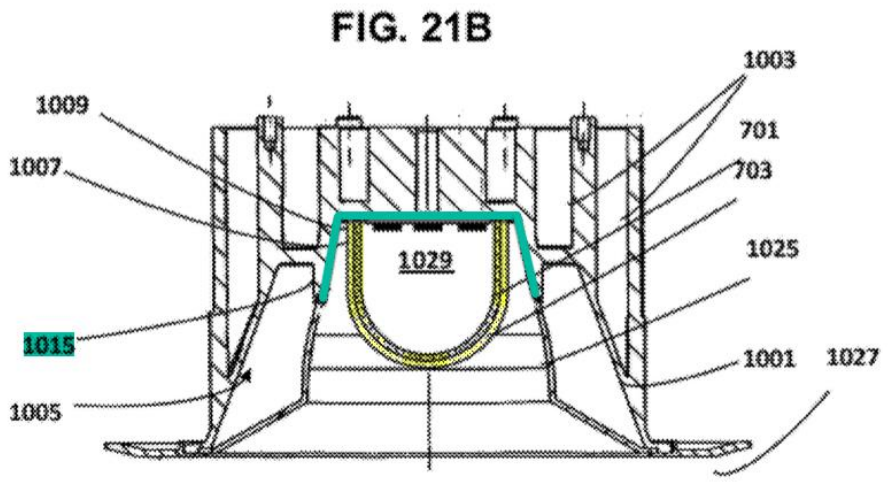

In discussing these embodiments, the specification provides that "[t]he light mixing chamber can be defined by the wavelength conversion component in conjunction with another component of the device such a device body or housing (e.g., dome-shaped wavelength conversion component encloses light emitters located on a base of device body to define light mixing chamber, or planar wavelength conversion component placed on a chamber shaped component to enclose light emitters located on a base of device body and surrounded by the chamber shaped component to define light mixing chamber)." Ex. 1, 25:20-29 (emphasis added).

The specification also discloses other embodiments, where the wavelength conversion component defines, in part, the light mixing chamber such as interior volume 1415 in Figure 16 (depicting a light bulb) and interior volume 1325 in Figure 23B, shown below.

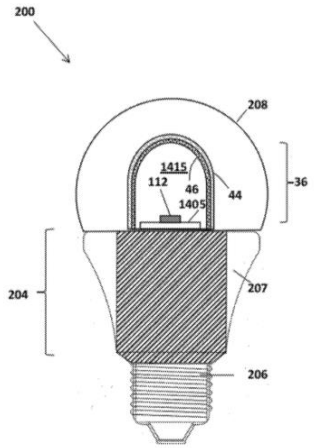

FIG. 16

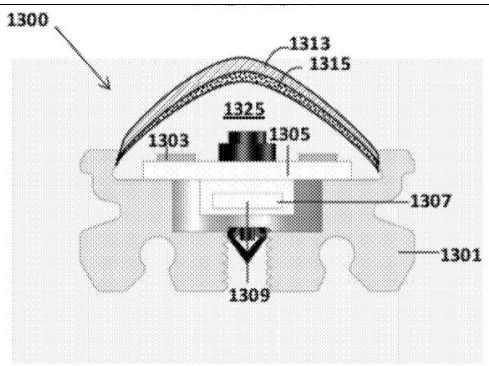

FIG. 23B

As Dr. Doolittle notes, with respect to these embodiments, the specification discloses that "[s]uch an interior volume provides a physical separation (air gap) of the wavelength conversion component from the light emitters that improves the thermal characteristics of the light emitting device." Ex. 1, 24:65-25:1; Ex. 4 ¶ 105. In all of the embodiments discussed above, the light mixing chamber is an interior volume separate from the wavelength conversion component.[6]

This is in contrast to the embodiments in Figures 18 and 19, where "the wavelength conversion layer 46' fills a substantial portion of the volume defined by the interior surface of the light diffusing layer 44." Ex. 1, 19:46-48; *see also id.* at 19:62-64. These embodiments are not described as having a "light mixing chamber."

[6] The specification's description of a light mixing chamber having an interior volume is consistent with how the term "chamber" is understood in technical dictionaries Ex. 4 ¶ 107.

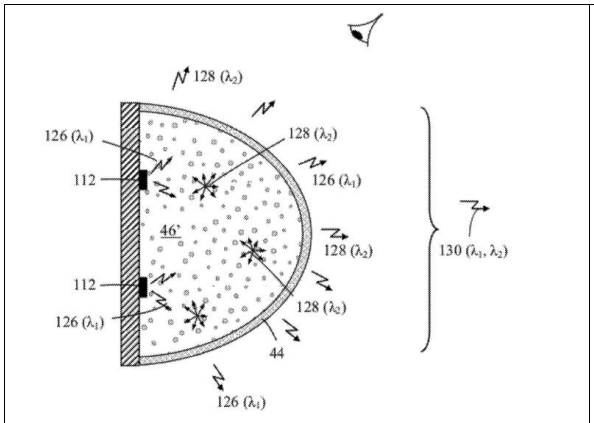

FIG. 18

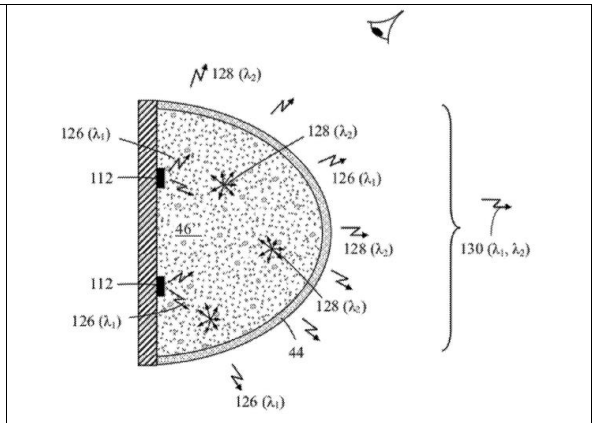

FIG. 19

Dr. Schubert does not dispute any of the above intrinsic evidence. Instead, his only rebuttal is that Feit's counsel told him that "it is improper to limit the claims only to a single disclosed embodiment, even if the specification only discloses a single embodiment." Ex. 5 ¶ 74. But Dr. Schubert misunderstands the applicable claim construction law, and therefore his opinions should be disregarded.

As discussed above, the claims are directed to a light bulb having a light mixing chamber. Some embodiments in the specification are described as having light mixing chambers, and those light mixing chambers are referred to as an "interior volume." Ex. 1, Figs. 16, 20C, 21C, 23B. The Asserted Patents distinctly claim those embodiments: claim 27 of the '678 Patent and claim 26 of the '539 Patent are directed to a linear lamp with a light mixing chamber (depicted in Figure 23B), claim 28 of the '678 Patent and claim 27 of the '539 Patent are directed to a downlight with a light mixing chamber (depicted in Figure 20C and 21C), and claim 29 of the '678 Patent and claim 28 of the '539 Patent are directed to a light bulb with a light mixing

chamber (depicted in Figure 16). Other embodiments are not described as having a light mixing chamber and do not have an interior volume. *See* Ex. 1, Figs. 18, 19. The claimed "light emitting device[s]" of claim 19 of the '678 Patent and claim 18 of the '539 Patent do not include a "light mixing chamber."

By expanding "light mixing chamber" to cover embodiments that do not have light mixing chambers, Feit and Dr. Schubert's "plain and ordinary meaning" of the term expands "light mixing chamber" to cover embodiments in the specification that do not have light mixing chambers. The Federal Circuit has rejected such an approach to claim construction. *AstraZeneca AB v. Mylan Pharms. Inc.*, 19 F.4th 1325, 1334–35 (Fed. Cir. 2021) ("AstraZeneca's proposed construction would read on two distinct formulations described in the written description—namely, a formulation comprising 0.0005% w/w PVP and one comprising 0.001% w/w PVP. Yet, the inventors chose to claim only one of these formulations, which supports construing the claims as limited to that formulation."); *see also Davis-Lynch, Inc. v. Weatherford Int'l, Inc.*, No. 6:07-CV-559, 2009 WL 1097510, at *6 (E.D. Tex. Apr. 20, 2009) (rejecting patentee's attempt to read claim term on multiple distinct embodiments covered by separate sets of claims).

E. "planar shapes" ('678 Patent, Claim 25) / ('539 Patent, Claim 24)

Feit Electric's Proposed Construction	Savant's Proposed Construction
Plain and ordinary meaning	substantially two-dimensional (i.e. flat)

The parties' dispute here centers on Feit's attempt to expand the scope of "planar shapes" to also encompass "a dome or elongated dome shape, despite the Asserted Patents having distinct claims covering these separate embodiments.

Claim 25 of the '678 Patent and claim 24 of the '539 Patent claim a device claims "in

which the wavelength conversion layer and the light diffusing layer **comprises planar shapes**." *Id.* (emphasis added).

In contrast, claim 26 of the '678 Patent and claim 25 of the '539 Patent, both of which depend from the same claims as claim 25 and 24, claim a device "in which the light diffusing layer **comprises a dome or elongated dome shape**." *Id.* (emphasis added).

Thus, these claims claim different shapes for the wavelength conversion component and light diffusing layer.

The specification describes these different shapes. In particular, the specification discloses that "[w]hereas the wavelength conversion component 36 of FIGS. 20A, 20B, 20C has a **two-dimensional shape** (e.g., is substantially planar), the wavelength conversion component 700 of FIGS 21A, 21B, and 21C has a **three-dimensional shape** (e.g., elongated dome shaped shell.)". Ex. 1 at 22:22-26 (emphasis added). The specification contrasts that these wavelength conversion components are different and not subsets of each other.

Figures 20A and 21A illustrate the difference between these two shapes. As annotated by Dr. Doolittle and reproduced below, Figure 20A depicts a wavelength conversion component with a two-dimensional shape, whereas figure 21A depicts a wavelength conversion component with a three-dimensional shape:

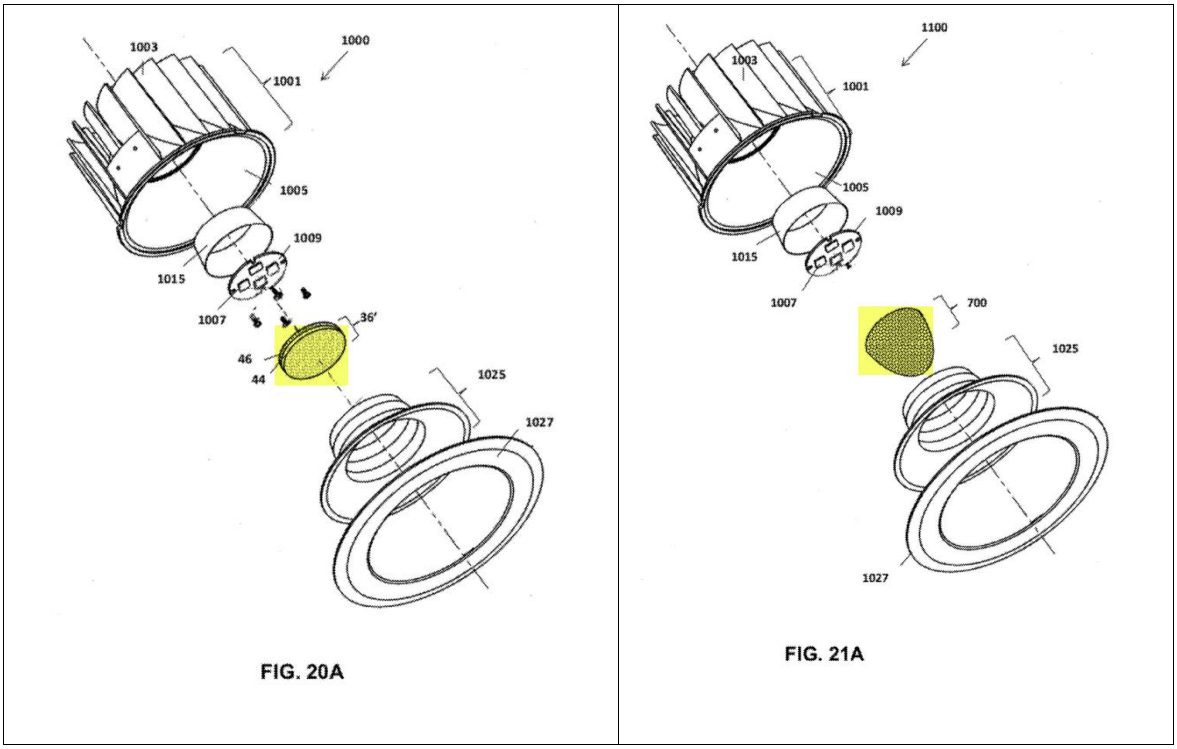

Ex. 4 ¶ 115.

The different claims make clear that a dome and an elongated dome shape are not "planar shapes" and instead are each a "three-dimensional shape" as discussed above.

However, Dr. Schubert opines that the opposite is true. He disagrees that "a dome and an elongated dome shape" are not "planar shapes," and argues that such an interpretation "unnecessarily limits the terms of the claim." Ex. 6 ¶ 52. According to Dr. Schubert, "a dome shape is a three-dimensional object, but it is comprised of a layer of uniform thickness, the thickness being much less than its width and length" and that therefore a dome shape is a planar shape. *Id.* ¶¶ 50, 51. He further argues that Figure 19, which discloses a dome-shaped light diffusing layer 44, is a planar shape. *Id.* ¶ 51. Such an approach is inconsistent with the claims and the specification, which distinguishes between wavelength conversion components with two-

dimensional shapes and wavelength conversion components with three-dimensional shapes. It also runs afoul of the presumption that each claim in a patent has a different scope. *AllVoice Computing PLC v. Nuance Communications, Inc.*, 504 F.3d 1236, 1248, 1895 (Fed. Cir. 2007). If a "planar shape" can also encompass **"**a dome or elongated dome shape," then claims 25 and 26 are redundant. *Aspex Eyewear, Inc. v. Marchon Eyewear, Inc.*, 672 F.3d 1335, 1349 (Fed. Cir. 2012) ("The fact that the two adjacent claims use different terms in parallel settings supports the district court's conclusion that the two terms were not meant to have the same meaning ...."). Dr. Schubert's attempts to conflate these two sets of claims should therefore be rejected.

V. CONCLUSION

For the foregoing reasons, Savant's proffered constructions for "light mixing chamber" and "planar shapes" should be adopted, and the remaining terms should be found indefinite.

Dated: March 13, 2025

Respectfully submitted,

/s/ Jonathan Auerbach

Joshua A. Friedman (0091409)
Ronald M. McMillan (0073247)
CALFEE, HALTER & GRISWOLD LLP
The Calfee Building
1405 East Sixth Street
Cleveland, Ohio 44114
(216) 622-8200
(216) 241-0816 (fax)
jfriedman@calfee.com
rmcmillan@calfee.com

David C. Radulescu, Ph.D. (*pro hac vice)*
Etai Lahav (*pro hac vice*)
Jonathan Auerbach (*pro hac vice*)
RADULESCU LLP
5 Penn Plaza, 19th Floor
New York, NY 10001
Tel.: (646) 502-5950

Fax: (646) 502-5959
david@radip.com
etai@radip.com
jonathan@radip.com

Attorneys for Defendant
Savant Technologies LLC

CERTIFICATE OF SERVICE

A true and correct copy of the foregoing instrument was served or delivered electronically via U.S. District Court [LIVE]- Document Filing System, to all counsel of record on March 13, 2025.

/s/ Jonathan Auerbach
Jonathan Auerbach