US008381974B2

(12) **United States Patent**
Zatloukal et al.

(10) **Patent No.: US 8,381,974 B2**
(45) **Date of Patent: *Feb. 26, 2013**

(54) **EMULATED RADIO FREQUENCY IDENTIFICATION**

(75) Inventors: **Peter Zatloukal**, Kirkland, WA (US); **G. Eric Engstrom**, Kirkland, WA (US); **Cindy M. Smith**, Kirkland, WA (US)

(73) Assignee: **Varia Holdings LLC**, Brooklyn, NY (US)

(*) Notice: Subject to any disclaimer, the term of this patent is extended or adjusted under 35 U.S.C. 154(b) by 0 days.

This patent is subject to a terminal disclaimer.

(21) Appl. No.: **13/363,202**

(22) Filed: **Jan. 31, 2012**

(65) **Prior Publication Data**

US 2012/0133483 A1 May 31, 2012

Related U.S. Application Data

(63) Continuation of application No. 10/560,262, filed as application No. PCT/US2004/018397 on Jun. 10, 2004, now Pat. No. 8,127,984.

(60) Provisional application No. 60/478,245, filed on Jun. 13, 2003.

(51) **Int. Cl.**

G06K 5/00	(2006.01)
G06K 7/00	(2006.01)
G06K 19/00	(2006.01)
G08B 13/14	(2006.01)
G05B 19/00	(2006.01)
B60R 25/00	(2006.01)
H04Q 5/22	(2006.01)
H04B 1/38	(2006.01)
H04B 1/40	(2006.01)
H04M 1/00	(2006.01)

(52) **U.S. Cl.** **235/380**; 235/435; 235/487; 340/572.1; 340/5.2; 340/5.7; 340/10.1; 455/73; 455/74; 455/553.1; 455/556.1; 455/552.1; 455/557

(58) **Field of Classification Search** 455/552.1, 455/556.1, 557, 73, 74, 83, 553.1; 235/380, 235/435, 487; 340/572.1, 5.2, 5.7, 10.1

See application file for complete search history.

(56) **References Cited**

U.S. PATENT DOCUMENTS

4,119,800	A		10/1978	Girardi
5,448,620	A	*	9/1995	Gershkovich et al. 455/552.1
5,473,318	A		12/1995	Martel
5,530,702	A		6/1996	Palmer et al.
5,793,843	A		8/1998	Morris
5,957,995	A		9/1999	Beckmann et al.
6,026,308	A		2/2000	Hsieh
6,032,054	A	*	2/2000	Schwinke 455/557
6,164,551	A		12/2000	Altwasser
6,167,128	A		12/2000	Fuller et al.
6,314,281	B1		11/2001	Chao et al.
6,359,866	B1	*	3/2002	Svensson et al. 370/331
6,421,347	B1		7/2002	Borgstahl et al.
6,434,395	B1		8/2002	Lubin et al.
6,476,708	B1		11/2002	Johnson
6,771,981	B1		8/2004	Zalewski et al.
7,110,792	B2		9/2006	Rosenberg

(Continued)

Primary Examiner — Daniel Walsh

(74) *Attorney, Agent, or Firm* — Schwabe, Williamson & Wyatt, P.C.

(57) **ABSTRACT**

A mobile communication device is equipped with hardware and/or software components to enable the device to output a data in a form of a radio frequency signal, emulating outputting of the data by either an active or a passive RFID transponder. The data may be a security key or an identifier. Emulation of an active RFID transponder includes facilitating selection of the data and instruction to output by a user. Emulation of a passive RFID transponder includes detecting for proximal presence of a RFID reader. Either case, provision of the data to the mobile communication device may include provision of associated signal attribute(s).

19 Claims, 12 Drawing Sheets

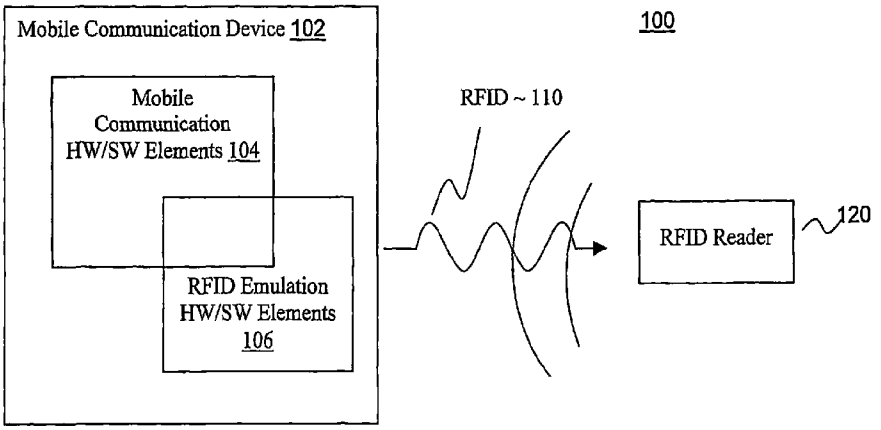

APPLE 1001

U.S. PATENT DOCUMENTS

7,245,997 B2 7/2007 Kitao et al.
7,280,810 B2 10/2007 Feher
7,283,044 B2 10/2007 Bandy
7,324,476 B2 1/2008 Agrawal et al.
7,375,616 B2 5/2008 Rowse et al.
7,440,743 B2 * 10/2008 Hara et al. 455/343.2
7,502,615 B2 3/2009 Wilhoite et al.
7,605,701 B2 * 10/2009 Lee 340/572.1
8,127,984 B2 * 3/2012 Zatloukal et al. 235/380
2002/0123325 A1 * 9/2002 Cooper 455/411
2002/0160775 A1 10/2002 Pecen et al.
2003/0069048 A1 4/2003 Liu et al.
2003/0158785 A1 8/2003 Erca
2004/0069852 A1 * 4/2004 Seppinen et al. 235/451
2004/0077352 A1 4/2004 Mahany
2004/0087273 A1 5/2004 Perttila et al.
2004/0093274 A1 5/2004 Vanska et al.
2004/0127256 A1 7/2004 Goldthwaite et al.
2004/0171373 A1 * 9/2004 Suda et al. 455/415
2004/0248616 A1 12/2004 Pecen et al.
2004/0263319 A1 12/2004 Huomo
2005/0127156 A1 6/2005 Yoo et al.
2005/0184856 A1 * 8/2005 Pourchot 340/5.61
2006/0003772 A1 * 1/2006 Semper 455/452.1
2006/0017544 A1 1/2006 Tanaka et al.
2006/0022802 A1 2/2006 Bridgelall
2006/0044111 A1 3/2006 Kollar et al.
2006/0052055 A1 * 3/2006 Rowse et al. 455/41.1
2006/0097848 A1 5/2006 Davidson et al.
2006/0111053 A1 * 5/2006 Wu et al. 455/90.3
2006/0116127 A1 6/2006 Wilhoite et al.
2006/0237528 A1 10/2006 Bishop et al.
2006/0280149 A1 12/2006 Kuhl et al.
2007/0030124 A1 * 2/2007 Lee 340/10.1
2007/0032261 A1 * 2/2007 Boyer et al. 455/550.1
2007/0037605 A1 2/2007 Logan
2007/0060212 A1 3/2007 Shah
2007/0066278 A1 3/2007 Hong
2007/0120679 A1 5/2007 Shin et al.
2007/0159330 A1 7/2007 Chakraborty et al.
2007/0178935 A1 * 8/2007 Shim et al. 455/552.1
2007/0197261 A1 8/2007 Humbel
2007/0263595 A1 11/2007 Charrat
2007/0274242 A1 11/2007 Lamacraft et al.
2007/0286171 A1 12/2007 Guan
2007/0293202 A1 12/2007 Moshir et al.
2008/0018433 A1 * 1/2008 Pitt-Pladdy 340/10.4
2008/0057876 A1 3/2008 Hsia et al.
2008/0146167 A1 * 6/2008 Rofougaran 455/88
2009/0058652 A1 3/2009 Hardy et al.
2009/0090783 A1 4/2009 Killian et al.
2009/0143013 A1 * 6/2009 Hatano et al. 455/41.3
2009/0170519 A1 7/2009 Wilhoite et al.
2009/0209283 A1 * 8/2009 Yang et al. 455/553.1
2009/0221232 A1 * 9/2009 Estevez et al. 455/41.1
2009/0243810 A1 10/2009 Pendlebury et al.
2009/0291634 A1 11/2009 Saarisalo
2010/0026454 A1 2/2010 Rowse et al.
2010/0137024 A1 6/2010 Maguire
2010/0158077 A1 6/2010 Mahany
2010/0239079 A1 * 9/2010 Bao 379/110.01
2012/0133483 A1 * 5/2012 Zatloukal et al. 340/5.7

* cited by examiner

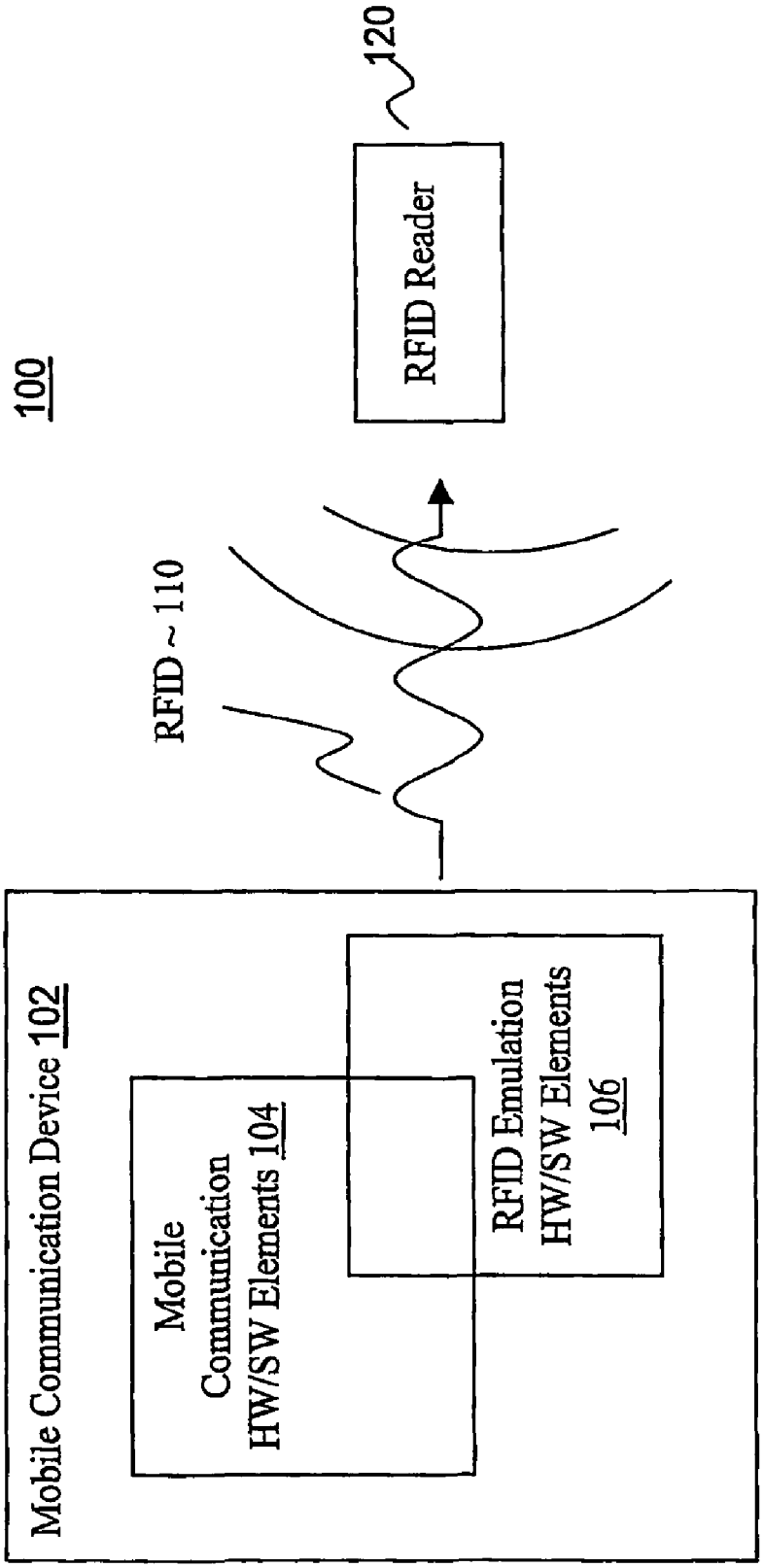
100
Mobile Communication Device 102
Mobile Communication HW/SW Elements 104
RFID Emulation HW/SW Elements 106
RFID ~ 110
RFID Reader
120

Figure 1

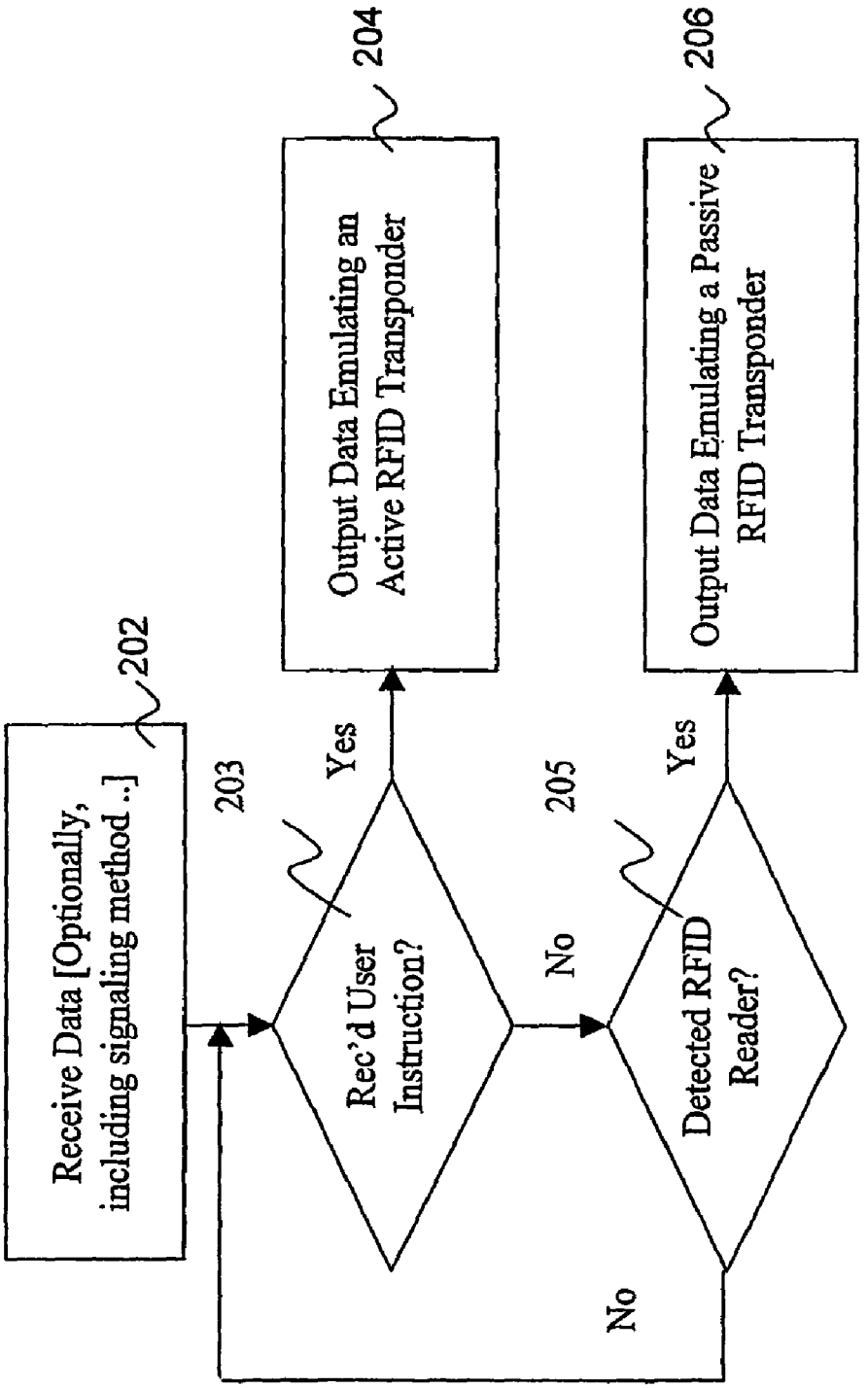
202
Receive Data [Optionally, including signaling method ..]
203
Rec'd User Instruction?
Yes
204
Output Data Emulating an Active RFID Transponder
No
205
Detected RFID Reader?
Yes
206
Output Data Emulating a Passive RFID Transponder
No

Figure 2

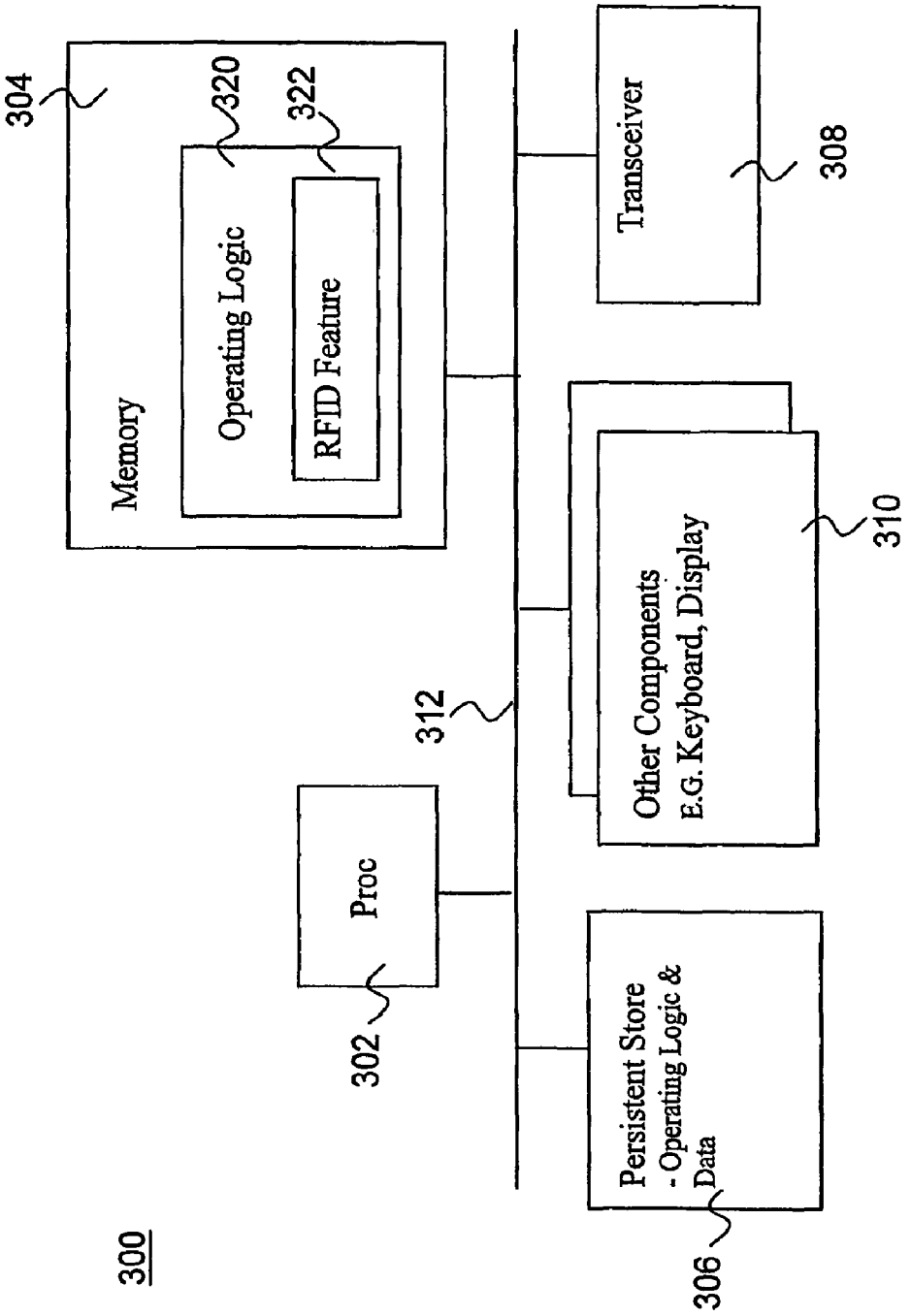
300
304
Memory
320
Operating Logic
322
RFID Feature
Transceiver
308
Other Components
E.G. Keyboard, Display
310
312
Proc
302
Persistent Store
- Operating Logic &
Data
306

Figure 3

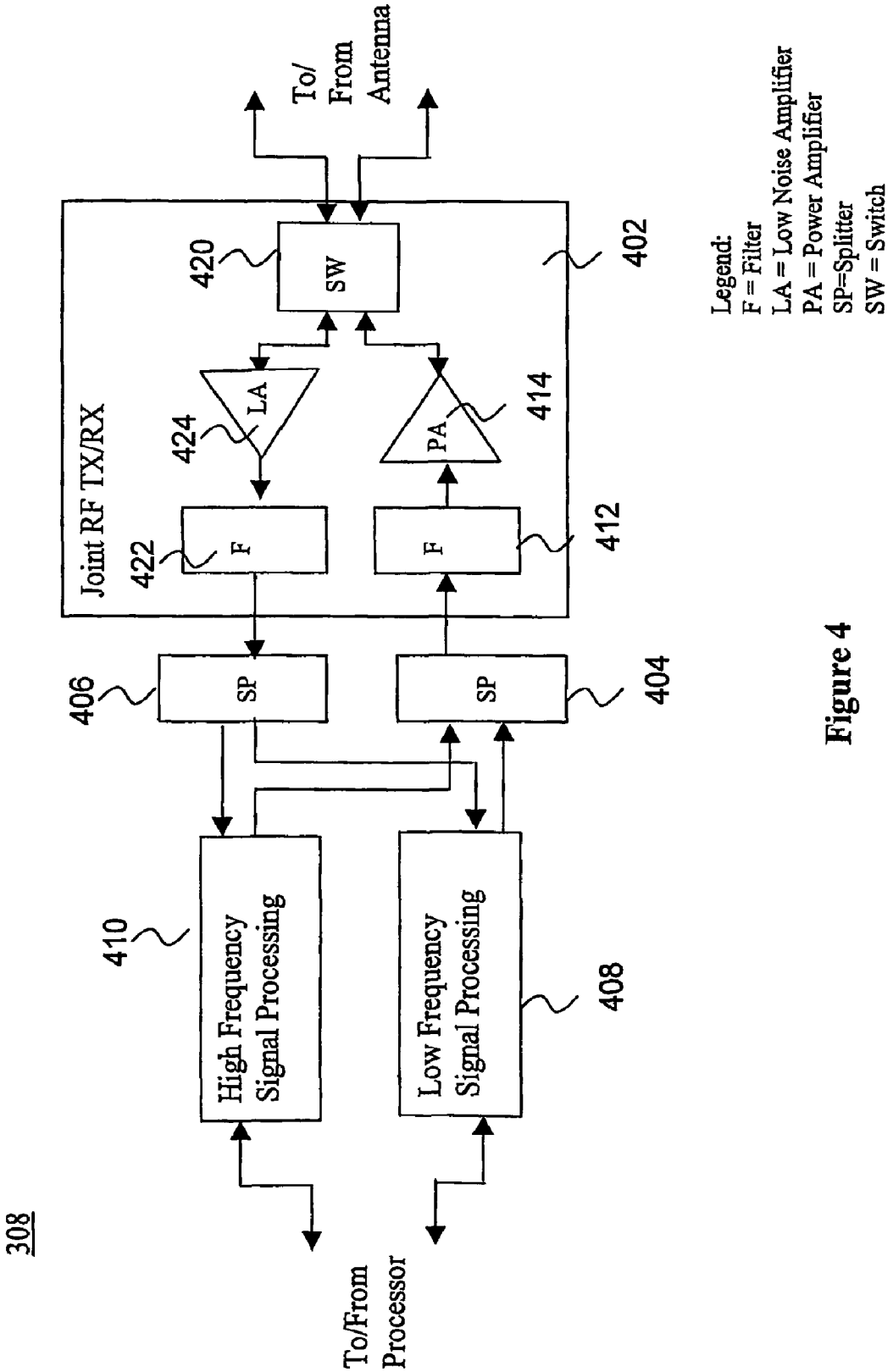
308
To/From Processor
High Frequency Signal Processing
410
Low Frequency Signal Processing
408
SP
406
SP
404
Joint RF TX/RX
F
422
F
412
LA
424
PA
414
SW
420
402
To/ From Antenna
Legend:
F = Filter
LA = Low Noise Amplifier
PA = Power Amplifier
SP=Splitter
SW = Switch

Figure 4

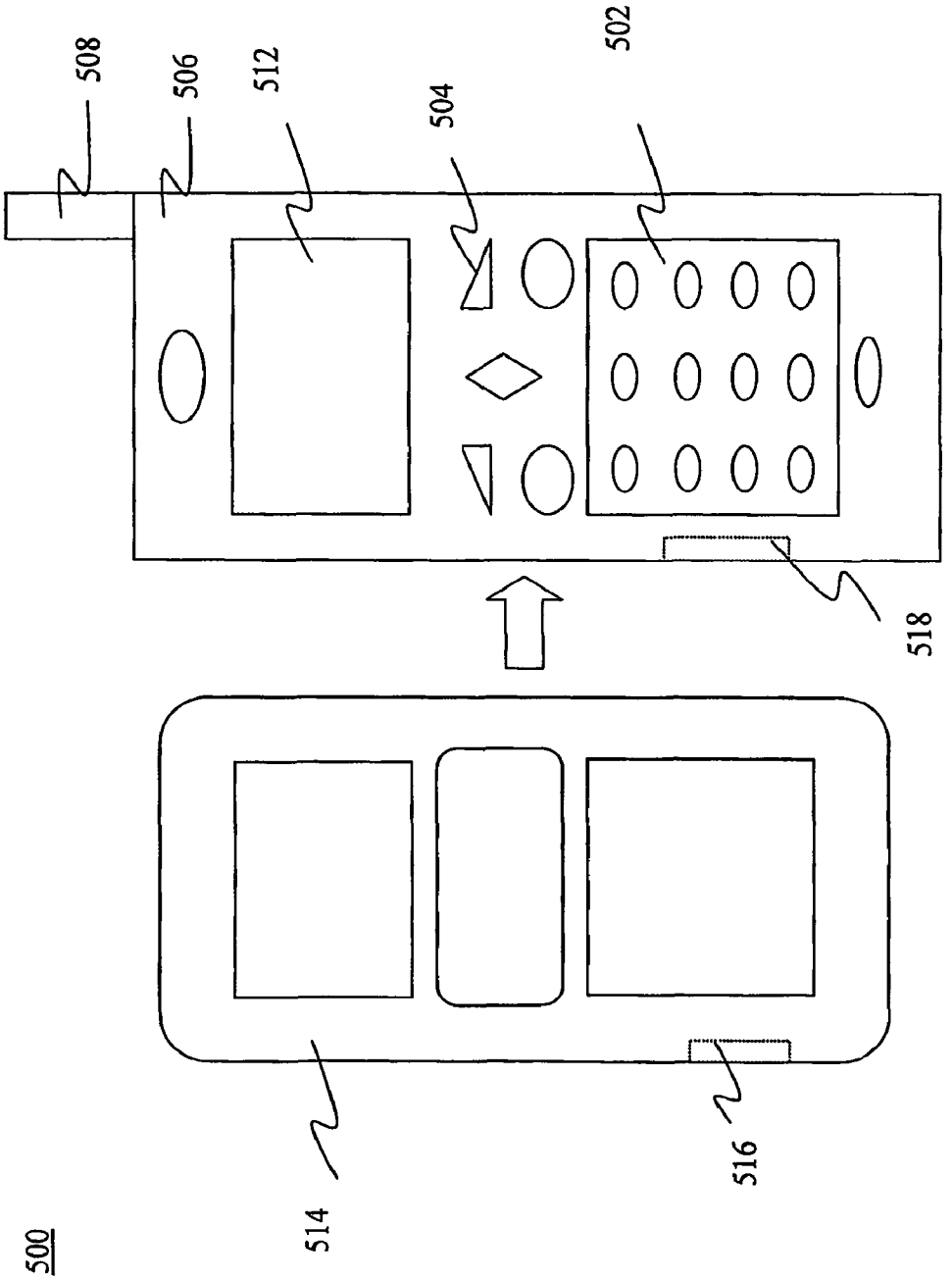

Figure 5a

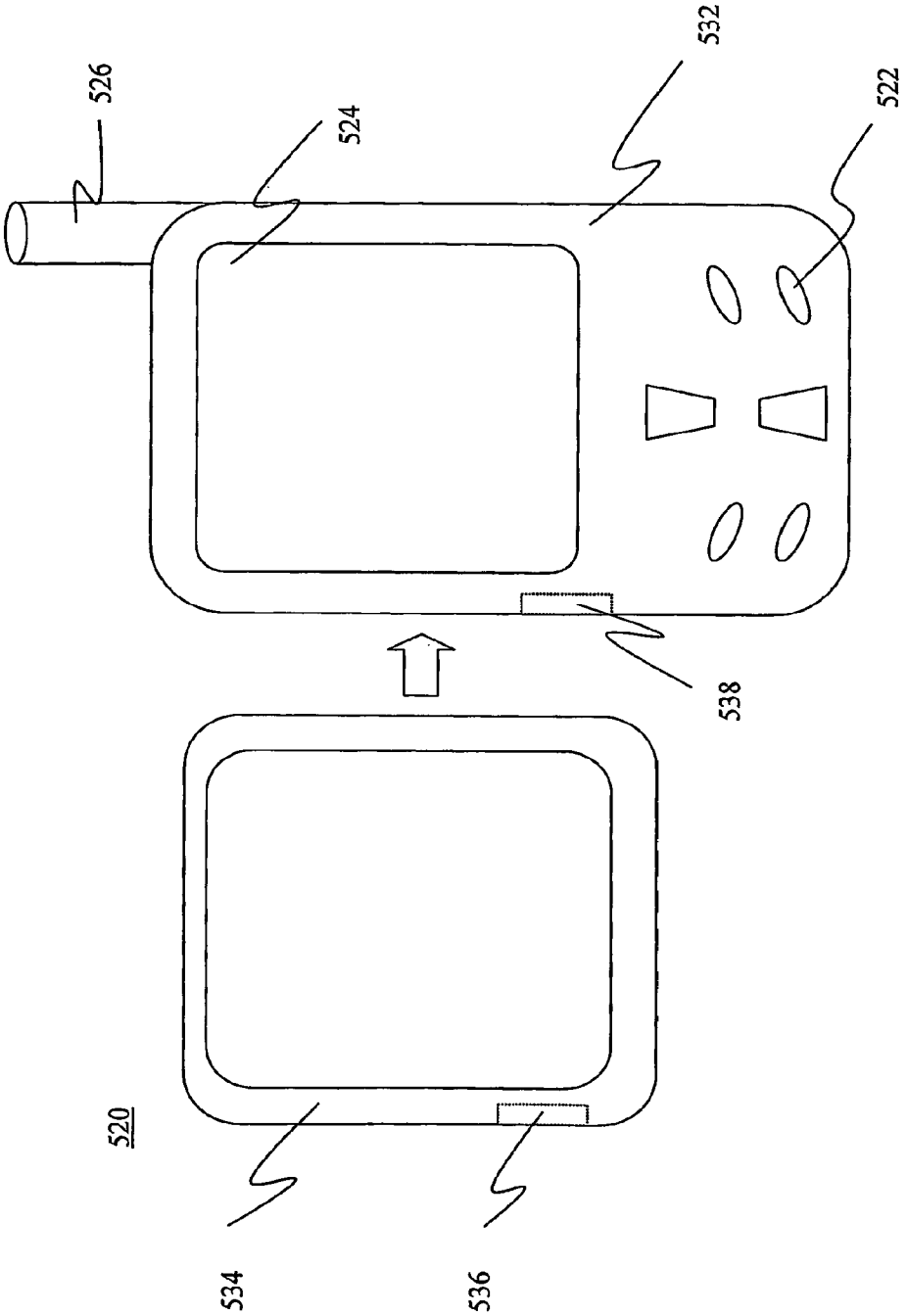

Figure 5b

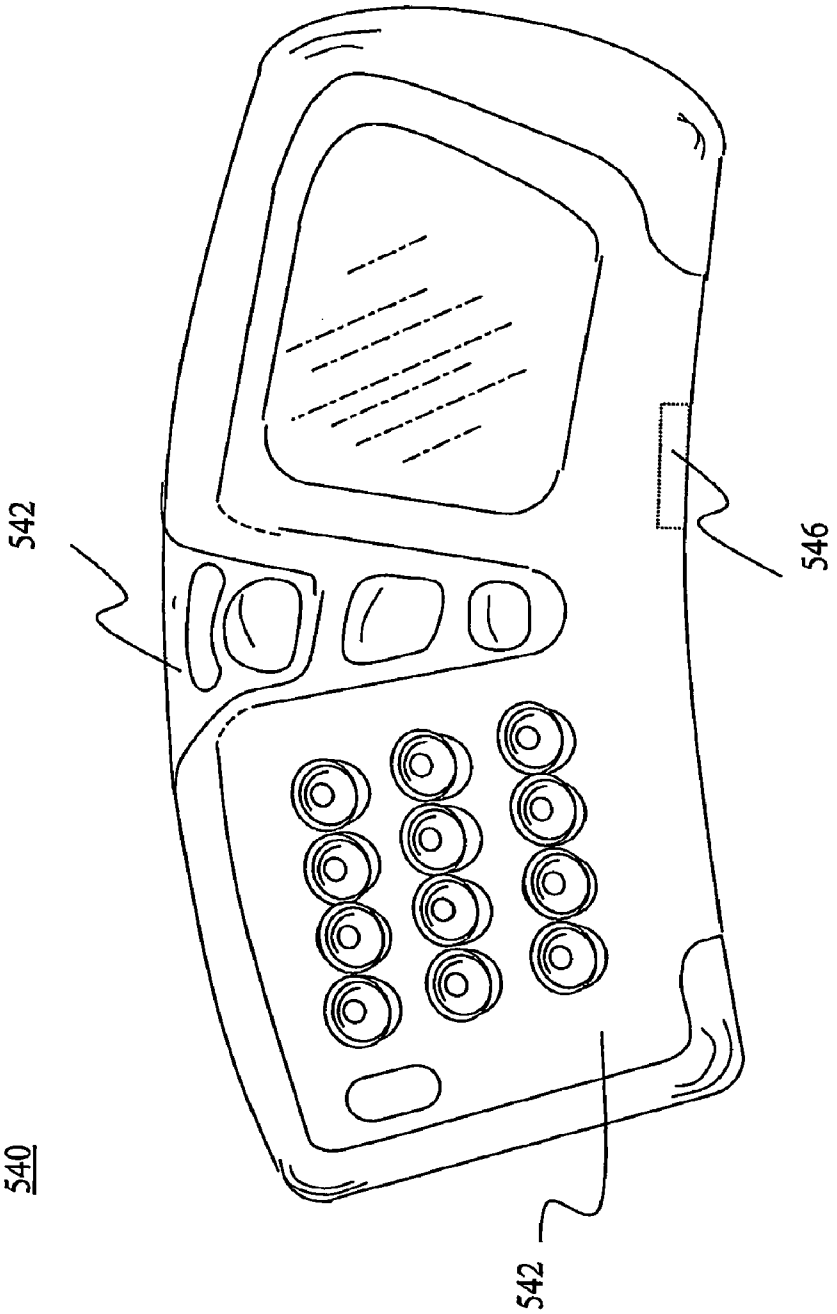

Figure 5c

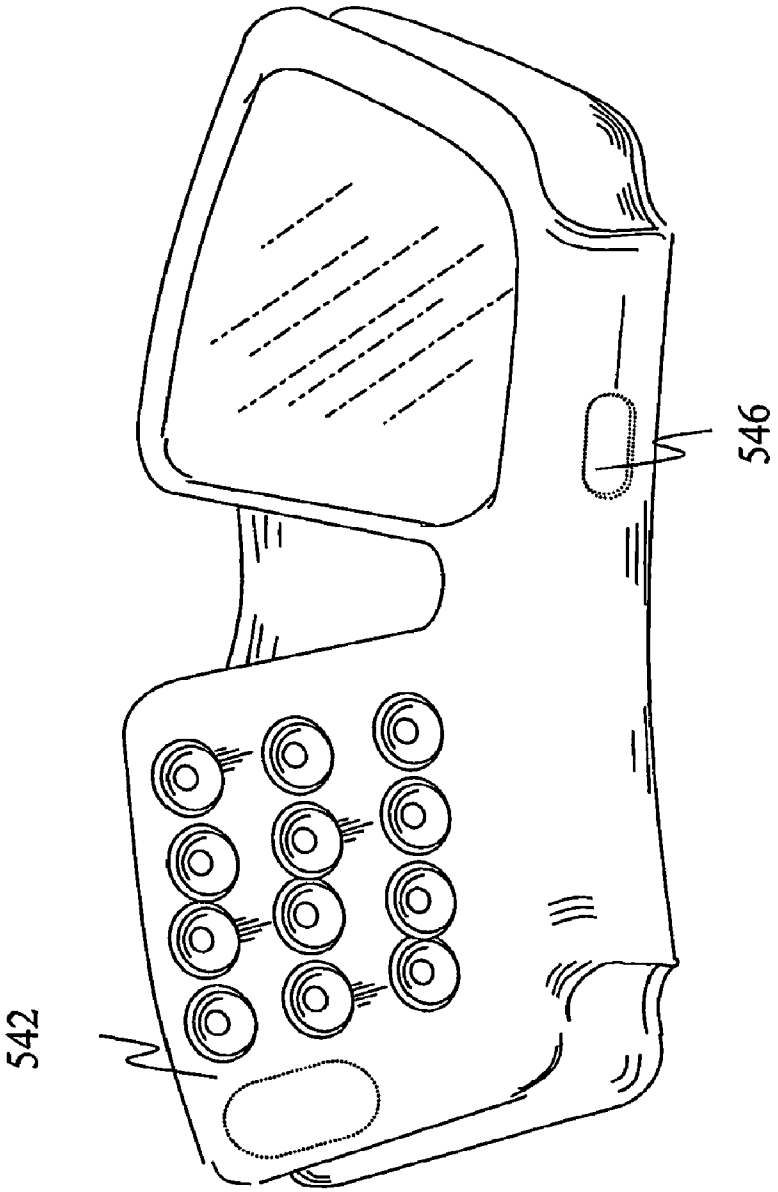

Figure 5d

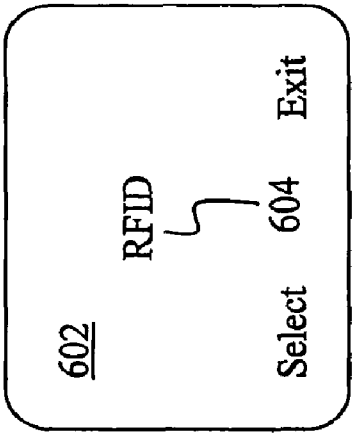

Figure 6a

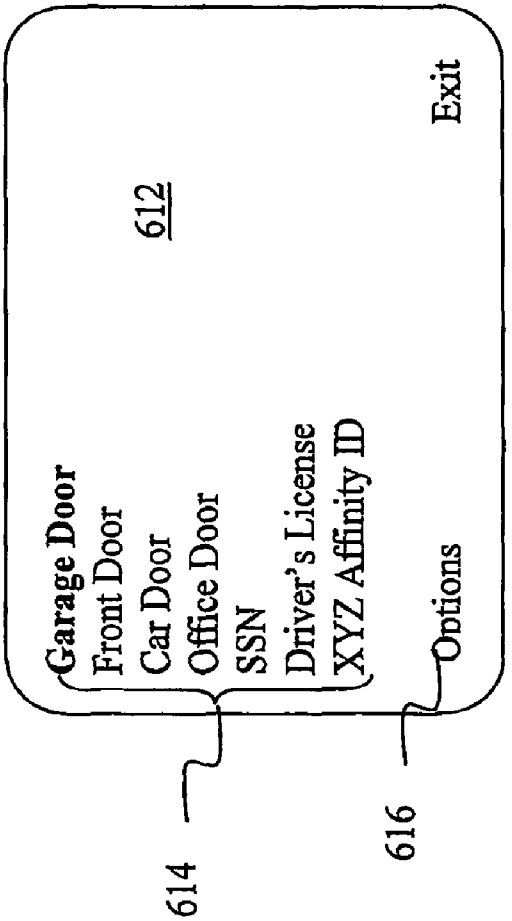

Figure 6b

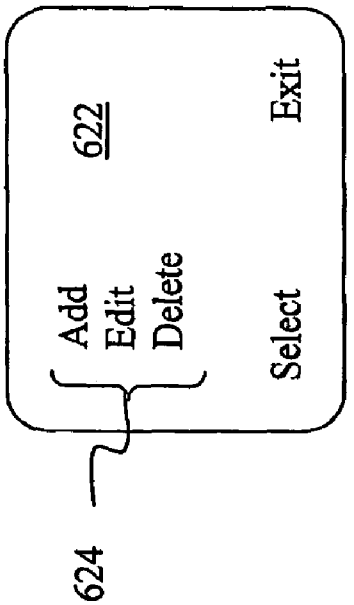

Figure 6c

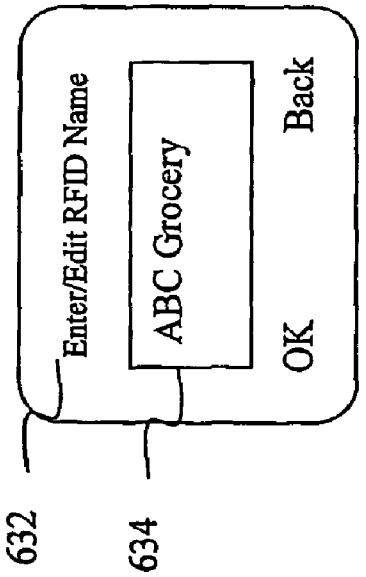

Figure 6d

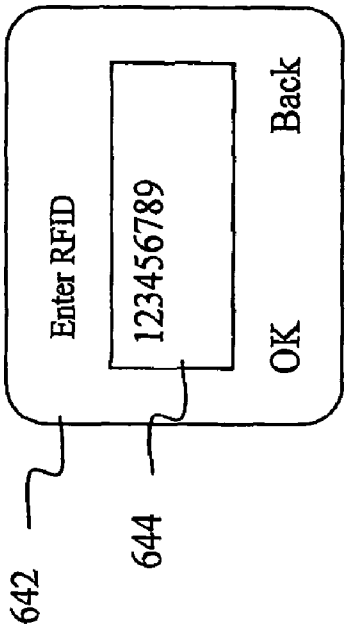

Figure 6e

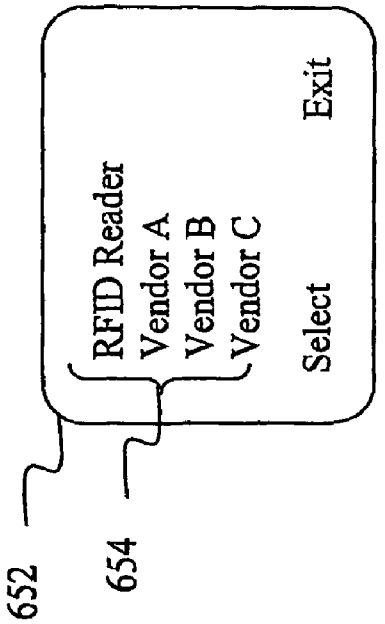

Figure 6f

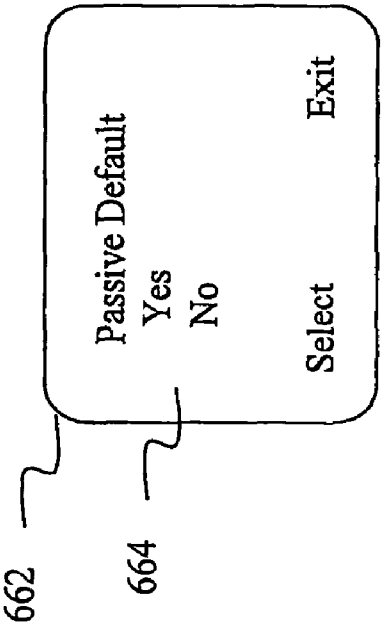

Figure 6g

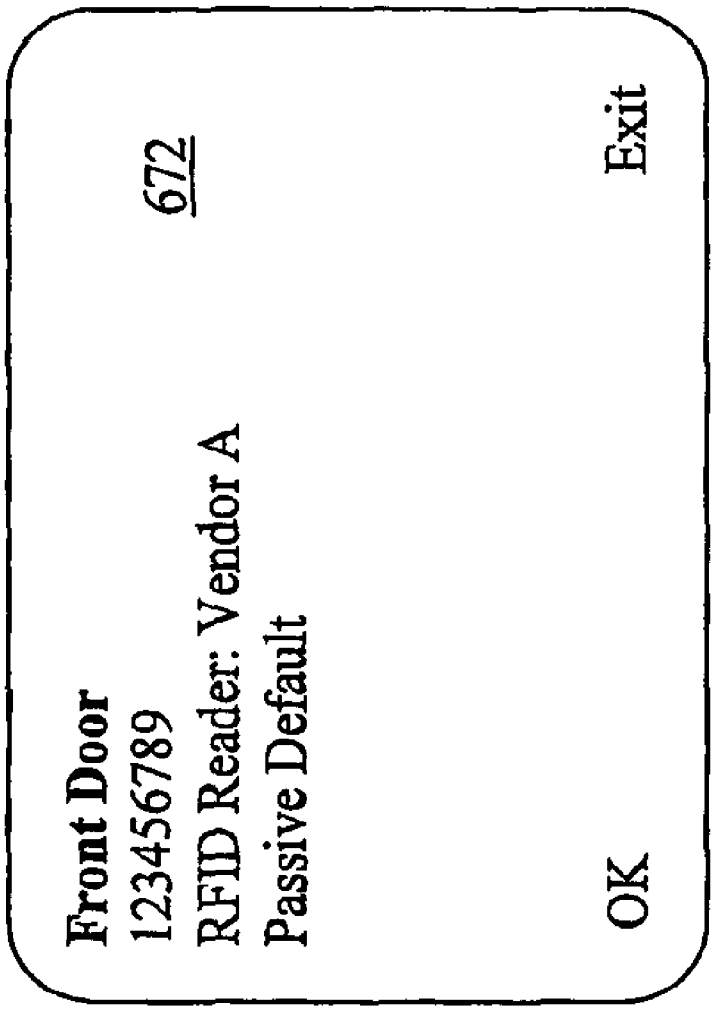
Front Door
123456789
RFID Reader: Vendor A
Passive Default
672
OK
Exit

Figure 6h

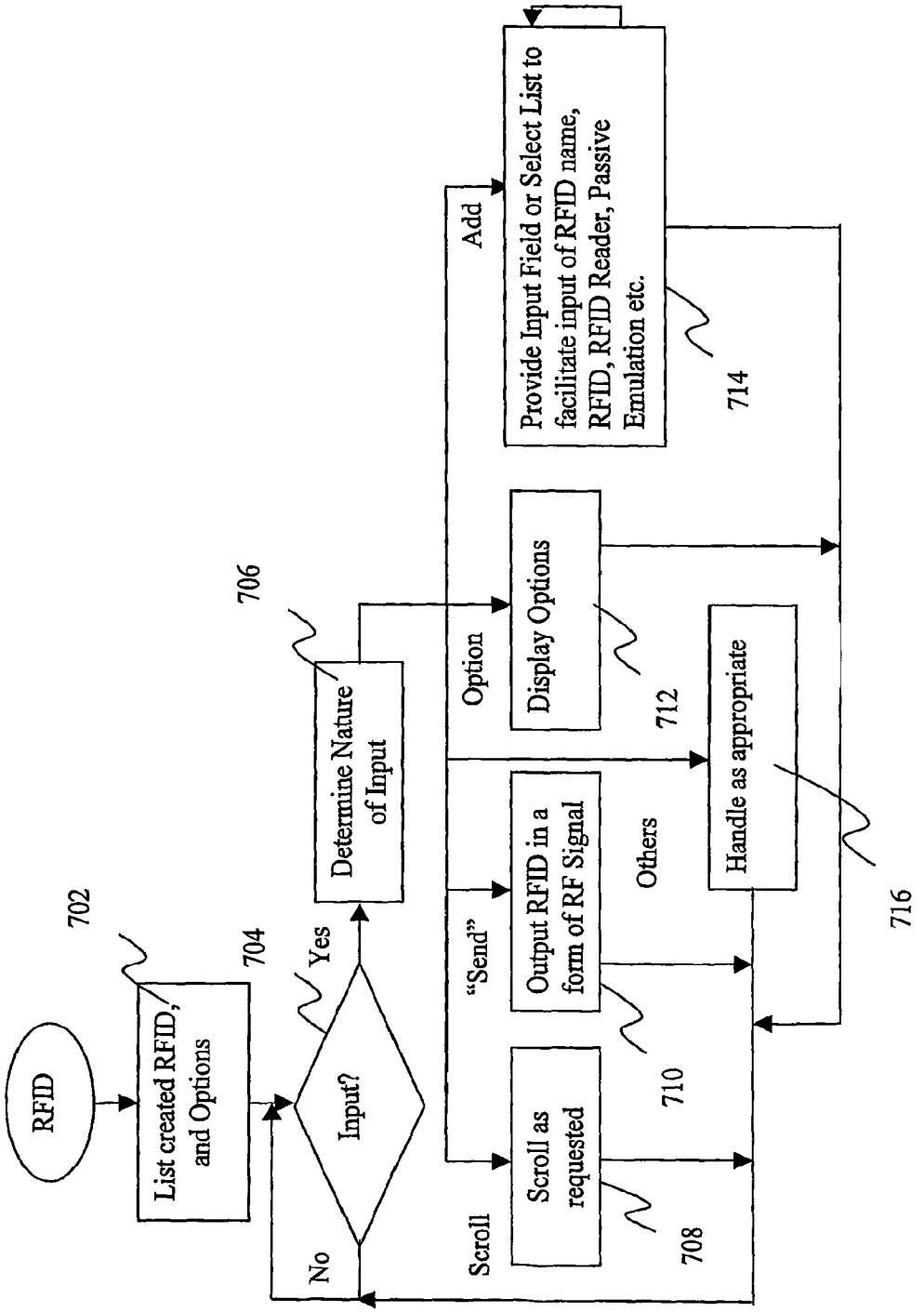
RFID
List created RFID, and Options
702
Input?
704
Yes
No
Determine Nature of Input
706
Scroll
Scroll as requested
708
"Send"
Output RFID in a form of RF Signal
710
Option
Display Options
712
Add
Provide Input Field or Select List to facilitate input of RFID name, RFID, RFID Reader, Passive Emulation etc.
714
Others
Handle as appropriate
716

Figure 7

EMULATED RADIO FREQUENCY IDENTIFICATION

RELATED APPLICATION

This application is a continuation of U.S. patent application Ser. No. 10/560,262, filed Dec. 9, 2005 and entitled "Emulated Radio Frequency Identification," which was the National Stage of International Application No. PCT/US04/18397, filed Jun. 10, 2004 and entitled "Emulated Radio Frequency Identification," which itself claims the benefit of U.S. Provisional Application No. 60/478,245, entitled "Radio Frequency Identification Using Mobile Communication Device" and filed Jun. 13, 2003.

FIELD OF THE INVENTION

The present invention relates to the fields of security, communication, and data processing. More specifically, the present invention is related to an emulated radio frequency data input method.

BACKGROUND OF THE INVENTION

It wasn't that long ago, even residents in medium size cities still feel secured enough to leave their homes unlocked and/or their garages open. In general, one can access one's place of employment, including parking facilities as well as one's office without identification or access keys.

In the world of commerce, things were also simpler. One typically may shop and consume goods and services, at relatively low prices, without having to be affiliated with any programs or entities.

However, the world has become a lot more complex in recent years. Virtually, all properties of any value, premises, including one's home, have to be secured, even for relatively small towns and cities. One can hardly shop and consume any goods and services, without having signed up with some promotional frequent "usage" programs or becoming affiliated with the commercial entities. The employment of affinity marketing has reached a point even neighboring grocery chains employ them, and not just airlines, hotels, or wholesale discount retailers.

As a result, it is not uncommon to find a person having to carry a number of physical keys and access/identification cards/tags to gain access to secured premises, such as one's home, office, parking garage, and so forth. Additionally, the person is likely to carry a number of remote security control devices, such as a key with remote control for gaining access to his/her vehicle, a garage door opener for gaining access to the person's garage at home, and so forth. The person is also likely to carry a number of affinity identification cards with member identifiers identifying the person as being affiliated with certain co-op or frequent patronage programs, such as wholesale discount retailers, airline or hotel frequent traveler program, and so forth, that entitle the person to certain benefits, such as discounts or rewards.

BRIEF DESCRIPTION OF THE DRAWINGS

The present invention will be described by way of exemplary embodiments, but not limitations, illustrated in the accompanying drawings in which like references denote similar elements, and in which:

FIG. **1** illustrates an overview of the present invention, in accordance with one embodiment;

FIG. **2** illustrates a method view of the present invention, in accordance with one embodiment;

FIG. **3** illustrates the relevant hardware elements of the device of FIG. **1** in further details, in accordance with one embodiment;

FIG. **4** illustrates the transceiver of FIG. **3** in further details, in accordance with another embodiment;

FIGS. **5***a*-**5***b* illustrate the exploded views of two embodiments of the mobile communication device of FIG. **1**;

FIGS. **5***c*-**5***d* illustrate an exploded view of another embodiment of the mobile communication device of FIG. **1**;

FIG. **6***a*-**6***h* illustrate a number of example screens of an end user interface, suitable for use to practice the present invention, in accordance with one embodiment; and

FIG. **7** illustrates the operational flow of the relevant aspects of the software in support of the RFID feature of the present invention, in accordance with one embodiment.

DETAILED DESCRIPTION OF EMBODIMENTS OF THE INVENTION

Embodiments of the present invention includes an emulated RFID method, more specifically, an emulated RFID method, using a mobile communication device, including the device itself, and certain hardware and/or software embodied therein for the practice of the emulated RFID method.

In the following description, various aspects of the illustrative embodiments of the present invention will be described. However, alternate embodiments may be practiced with only some or all aspects of the illustrative embodiments of the present invention. For purposes of explanation, specific numbers, materials and configurations are set forth in order to provide a thorough understanding of the present invention. However, alternate embodiments may be practiced without the specific details. In other instances, well-known features are omitted or simplified in order not to obscure the essence of the illustrative embodiments of the present invention.

Terminology

Parts of the description will be presented in data processing terms, such as data, selection, retrieval, generation, and so forth, consistent with the manner commonly employed by those skilled in the art to convey the substance of their work to others skilled in the art. As well understood by those skilled in the art, these quantities take the form of electrical, magnetic, or optical signals capable of being stored, transferred, combined, and otherwise manipulated through electrical and/or optical components of a processor and its subsystems.

Part of the descriptions will employ various abbreviations, including but are not limited to:

CDROM	Compact Disc Read Only Memory
DDRAM	Dynamic Direct Random Access Memory
DVD	Digital Versatile Disc
EEPROM	Electrically Eraseable Programmable Read-Only-Memory
HTTP	HyperText Transmission Protocol
SDRAM	Static Direct Random Access Memory
SMS	Small Messaging Service

The term "number" as used in this application to describe a data, including both its usage in the specification and the claims, typically refers to numeric data, as the word "number" is conventionally used in mathematics. However, in certain contexts, the "number" may also include alphabet or special

characters, as the term is conventionally understood by those skilled in the art in those contexts. For examples, a driver's license number, a passport number, an employee number, or a student ID number, as each of these terms is conventionally used, often includes one or more alphabets or special characters, even though they are referred to as "numbers". The term accordingly is to be given the meaning that is consistent with the context under which the term is used.

Section Headings, Order of Descriptions and Embodiments

Section headings are merely employed to improve readability, and they are not to be construed to restrict or narrow the present invention.

Various operations will be described as multiple discrete steps in turn, in a manner that is most helpful in understanding the present invention, however, the order of description should not be construed as to imply that these operations are necessarily order dependent. In particular, these operations need not be performed in the order of presentation.

The phrase "in one embodiment" is used repeatedly. The phrase generally does not refer to the same embodiment, however, it may. The terms "comprising", "having" and "including" are synonymous, unless the context dictates otherwise.

Overview

Refer now to FIG. **1**, wherein a block diagram illustrating an overview of the present invention **100**, in accordance with one embodiment, is shown. As illustrated, for the embodiment, mobile communication device **102** is equipped with hardware and/or software elements **104** to perform its primary function, which is to facilitate a user of device **102** to engage in communication with another user of another communication device (not shown). In various embodiments, the communication may be audio (such as phone calls), textual (such as messaging) and/or visual (such as airtexting using light sources). Additionally, for the embodiment, mobile communication device **102** is equipped with hardware and/or software elements **106** to facilitate provision or transfer of a key/identifier in a form a radio frequency signal **110**, which may be read e.g. by a radio frequency identifier (RFID) reader **120**. In turn, the provision of RFID **110** may be responded to by a system (not shown) with which RFID reader **120** is a part or coupled to.

As depicted in FIG. **1**, blocks **104** and **106** "intersect" with one another. The "intersection" represents the fact that in preferred embodiments of the present invention, substantial portions of the hardware and/or software elements employed to provide a RFID, are the same elements employed to facilitate the primary function of device **102**, i.e. to facilitate a user in communicating with another user of another communication device.

In other words, illustrative embodiments of the present invention advantageously leverage on existing elements of mobile communication device **102**, and supplement them, to enable mobile communication device **102** to be able to provide a RFID, emulating a RFID transponder, as well as facilitating user communication.

As will be described in more detail below, in preferred embodiments, mobile communication device **102** is equipped to provide RFID, emulating an active and/or a passive RFID transponder.

Further, RFID **110** may be any keys and/or identifiers, including but not limited to security keys, such as garage door "keys", exterior or interior door keys, or identifiers, such as, employee numbers, driver's license numbers, social security numbers, credit card numbers (optionally, including expiration dates), affinity program member identifiers, and so forth.

Continue to refer to FIG. **1**, except for the present invention incorporated therein, mobile communication device **102** represents a broad range of mobile communication devices known in the art, including but are not limited to wireless mobile phones and personal digital assistants equipped with communication capability.

The term "wireless mobile phone" as used herein, including the specification and the claims, refers to the class of telephony devices equipped to facilitate a user in communicating with another user of another communication device, notwithstanding the user's movement around different geographic areas, so long the wireless mobile phone is in contact with a base/service station of a wireless network service provider. The term includes the analog as well as the digital subclasses. Communication may be voice and/or data, audio, textual and/or visual. The other user/communication device may be mobile or land line based.

RFID reader **120** represents a broad range of such devices known in the art or to be designed. Currently, most RFID readers **120** employ proprietary formats/protocols. That is, RFID readers **120** of different manufacturers tend to employ different frequencies, amplitudes, and/or keying schemes (which may be frequency shifting keying (FSK), amplitude shifting keying (ASK) or phase shifting keying (PSK)).

Various embodiments of the methods of the present inventions, including elements **106**, in particular, added elements, will be described in turn below.

Method

FIG. **2** illustrates a method view of the present invention, in accordance with one embodiment. As illustrated, device **102** is first provided with the RFIDs, block **202**. The RFIDs may be provided in any one of a number of known or to be designed manners, including but are not limited to

- manual entry, using a keypad of device **102**,
- read into device **102**, from an access/identification card, using a magnetic or optical card reader of device **102**,
- downloaded into device **102**, from a coupled computing device, through a serial/parallel port of device **102** or through a network interface of device **102** using SMS or HTTP messages.

Typically, provision of a RFID will include the manner the RFID is to be outputted, i.e. signaled. As alluded to earlier, the manner it is to be signaled is dependent on the format/protocol employed by the intended RFID reader **120**. For examples, for a garage door key, the format/protocol employed by RFID reader **120** of the garage opener system, and for an affinity program member identifier, the format/protocol employed by RFID reader **120** of the point-of-sale system of the entity offering the affinity program.

Alternatively, a default signaling format/protocol, such as an industry standard, the most popular proprietary format/protocol, or a selected proprietary format/protocol may be assumed instead, when one is not provided.

During operation, in response to a user instruction, typically after the user has selected the RFID to be outputted from a number of RFIDs stored in device **102**, block **203**, device **102** outputs the selected RFID as instructed, emulating an active RFID transponder, block **204**.

For the embodiment, one RFID, e.g. an access key/identifier (such as an employee number), may also be selected/designated as a default RFID, the output of which may be

emulated in a passive manner. That is, the selected/designated default RFID will be outputted automatically, whenever device **102** is within the proximal presence, or more specifically, the operational space, of an intended RFID reader **120**.

Accordingly, device **102** monitors for probing signals of an intended RFID reader **120** (or a type of RFID readers **120**), to determine whether device **102** is within the operational space of such a RFID reader **120**, block **205**. On so determining, device **102** outputs the designated RFID automatically, emulating a passive RFID transponder, block **206**.

A Hardware/Software Implementation

FIG. **3** illustrates the relevant elements of device **102**, in accordance with one embodiment. As illustrated, for the embodiment, device **102** includes processor **302**, memory **304**, persistent store **306**, transceiver **308**, and a number of other components **310**, coupled to each other via bus **312**.

Persistent store **306** and memory **304** are employed to store permanent and working copies of a software implementation of the operating logic **320** of device **102**, including the supplemental RFID feature **322**. In various embodiments, persistent store **306** may be an EEPROM (or like kind variants, such as a Flash Memory, a Memory Stick), a magnetic or optical disk drive, a CDROM, a DVD drive and so forth. Memory **304** may be any SDRAM, DDRAM or other high speed volatile as way as non-volatile storage devices known in the art.

Processor **302** is employed to execute operating logic **320**, including RFID feature **322**. As will be readily apparent from the description to follow, operating logic **320** may be implemented in any one of a number of suitable system programming languages, including but not limited to high level languages that may be compiled into executable instructions supported by processor **302**. Processor **302** may be any one of a number of processors designed or to be designed for mobile devices.

Except for transceivers **308**, RFID feature **322** and the manner the various elements of FIG. **3** are used to practice the present invention, the other illustrated elements are known in the art, and accordingly will not be further described. One embodiment of transceiver **308** will be described referencing FIG. **4**, and one embodiment of RFID feature **322** will be described, referencing FIG. **6-7**.

As described earlier, processor **302**, memory **304**, persistent store **306** and bus **312** may be shared elements of device **102**, also employed to implement the primary communication function of device **102**. However, in alternate embodiments, dedicated elements may be employed for some or all of these elements instead.

In one embodiment, device **102** is a wireless mobile telephone, an exploded view of which is illustrated in FIG. **5***a*. Wireless mobile phone **500**, in addition to the earlier described elements, also includes display **506**, control buttons **504**, keypad **502**, antenna **508**, body **512** and cover **514**. Body **512** is substantially rectangular in shape. Further, body **512** is palm-sized or smaller.

For the embodiment, cover **514** includes embedded electronic components having instructions, data, and/or locations to obtain such instructions and/or data to personalize, customize and/or enhance phone **500**. Phone **500** includes complementary electronic component interface **516** in support of such personalization, customization and/or enhancement.

Cover **514** may form a part of housing **512**, i.e. a required element to complete phone **500**, or it may be an accessory to be adorned by phone **500**, i.e. not a required element to complete phone **500**.

In another embodiment, device **102** is a PDA, an exploded view of which, is illustrated in FIG. **5***b*. PDA **502**, in addition to the earlier described elements, also includes display **524**, control buttons **522**, antenna **526**, body **532**, and cover **534**. Body **530** is also substantially rectangular in shape, as well as palm-sized or smaller.

Similarly, for the embodiment, cover **534** includes embedded electronic components having instructions, data, and/or locations to obtain such instructions and/or data to personalize, customize and/or enhance PDA **520**. PDA **520** includes complementary electronic component interface **536** in support of such personalization, customization and/or enhancement.

Cover **534** may form a part of housing **532**, i.e. a required element to complete PDA **520**, or it may be an accessory to be adorned by PDA **520**, i.e. not a required element to complete PDA **520**.

FIG. **5***c*-**5***d* illustrate yet another embodiment of device **102**, another wireless mobile telephone, an exploded view of which is illustrated. Wireless mobile phone **540** is similarly constituted as the earlier described embodiments, including body **542** and cover **544**. However, body **542** has a substantially boomerang or banana shape. Body **542** is also typically palm-sized or smaller.

For the embodiment, cover **544** also includes embedded electronic components having instructions, data, and/or locations to obtain such instructions and/or data to personalize, customize and/or enhance phone **540**. Phone **540** includes complementary electronic component interface (not shown) in support of such personalization, customization and/or enhancement.

Cover **544** may form a part of housing **542**, i.e. a required element to complete phone **540**, or it may be an accessory to be adorned by phone **540**, i.e. not a required element to complete phone **540**.

In all or selected one(s) of these embodiments, some or all elements **106** in support of the RFID feature of the present invention may be provided through embedded electronic components of the housing/accessory covers.

Smart covers are the subject matters of subject matter of co-pending U.S. application Ser. No. 10/087,098, filed Mar. 1, 2002, entitled "Personalizing Electronic Devices and Smart Covering", and U.S. application Ser. No. 10/428,815, filed May 2, 2003, entitled "Personalization of Mobile Electronic Devices and Smart Accessory Cover", which specifications are hereby fully incorporated by reference.

While all three embodiments of FIG. **5***a*-**5***d* have been illustrated with smart covers and external antennas. In alternate embodiments, the present invention may be practiced without smart covers and/or external antennas. The present invention may be practiced with conventional covers, without embedded intelligence and/or internal antennas.

Transceiver

FIG. **4** illustrates transceiver **308** of FIG. **3** in further details, in accordance with one embodiment. As illustrated, for the embodiment, transceiver **308** includes a joint radio frequency (RF) transmit/receive (TX/RX) section **402**, separate signal processing sections **408** and **410** for a range of higher frequencies and a range of low frequencies, switch **404** and splitter **406**. The elements are coupled to each other as shown.

For the embodiment, joint RF TX/RX **402** includes in particular, switch **420**, filters **412** and **422**, low noise amplifier **424** and power amplifier **414**, coupled to one another as shown. Switch **420** is employed to switch between transmit-

ting and receiving RF signals. Filters **412** and **422**, low noise amplifier **424** and power amplifier **414** are employed to perform their conventional filtering and amplification functions on the transmit and receive signals.

For transmission, switch **404** switches between the output of high frequency signal processing **410** and the output of low frequency signal processing **408** to the transmit path of Joint RF TX/RX **402**.

For reception, splitter **406** splits the output of the receive path of Joint RF TX/RX **402** and provides the receive signal to high frequency signal processing **410** as well as low frequency signal processing **408**.

For the embodiment, high frequency signal processing **410** performs up and down conversions of the transmit and receive signals of the primary communication function of mobile communication device **102**, e.g. the transmit and receive signals of a voice call. In one embodiment, the transmit and receive signals are transmitted and received in the GHz ranges.

Low frequency signal processing **408**, on the other hand, performs up and down conversions of the transmit and receive signals of the RFID feature, e.g. the output signal of a RFID to emulate either an active or a passive transponder, and the received probing signal of a RFID reader. In one embodiment, the transmit and receive signals are transmitted and received in the MHz ranges.

Up and down conversions, filtering, amplifications, and so forth, in and of themselves, except for the manner they are being used to provide RFIDs using a mobile communication device, are known in the art, accordingly, will not be further described.

RFID Feature

FIGS. **6-7** illustrate selected portions of an example end user interface, and the operational flow of the relevant aspects of RFID feature **322** respectively, in accordance with one embodiment. FIG. **6** comprises FIG. **6***a*-**6***h*.

As illustrated in FIG. **6***a*, for the embodiment, the user interface includes screen **602** having selectable text display "RFID" **604**, with which a user may interact to launch the RFID function (by selecting text display **604**, using e.g. control keys **504**).

As illustrated in FIG. **6***b*, for the embodiment, the user interface further includes screen **612** enumerating a list of RFIDs **614** stored in device **102**. List **614** may be displayed for example, among other situations, in response to a user's selection of text display **604** of screen **602**. A user may select one of the RFIDs, and instruct device **102** to output the selected RFID in a form of an appropriate radio frequency signal, emulating provision of the RFID by an active RFID transponder, using e.g. a "send/call" key of device **102**.

Screen **612** also includes selectable "option" button **616**, with which a user may interact to display a list of RFID management options, using e.g. control keys **504**.

As illustrated in FIG. **6***c*, for the embodiment, the user interface further includes screen **622** enumerating a list of RFID management options **624**, such as "add", "edit" or "delete" RFIDs. List **624** may be displayed for example, among other situations, in response to a user's selection of "option" **616** of screen **612**.

As illustrated in FIG. **6***d*, for the embodiment, the user interface further includes screen **632** displaying field **634**, through which a user may enter/edit a RFID name. Field **634** may be displayed for example, among other situations, in response to a user's selection of "add" or "edit" of screen **622**.

As illustrated in FIG. **6***e*, for the embodiment, the user interface further includes screen **642** displaying field **644**, through which a user may enter/edit a RFID. Field **644** may be displayed for example, among other situations, in response to a user indicating completion of entry of a RFID name using screen **632**.

As illustrated in FIG. **6***f*, for the embodiment, the user interface further includes screen **652** displaying a list of RFID types **654**, with which a user may select and associate with a RFID. List **654** may be displayed for example, among other situations, in response to a user indicating completion of entry of a RFID, using screen **642**, thereby allowing the user to associate a RFID reader type with the entered RFID.

Each RFID reader type is assumed to have a deterministic RFID signaling format/protocol. Accordingly, by selecting the RFID reader type, the user is effectively selecting or specifying the RFID signaling format/protocol. In alternate embodiment, a user may be requested to select the RFID signaling format/protocol explicitly, as opposed to implicitly, in the illustrated embodiment.

As illustrated in FIG. **6***g*, for the embodiment, the user interface further includes screen **662** displaying a request **664** to confirm whether a RFID is to be selected or designated as the default RFID to be used for emulation of passive transponders. Request **664** may be displayed for example, among other situations, in response to a user selecting a RFID reader type, using screen **652**, thereby allowing the user to (implicitly) associate a RFID format/protocol with the entered RFID.

As illustrated in FIG. **6***f*, for the embodiment, the user interface further includes screen **672** displaying a RFID and its details, including but not limited the intended RFID reader type, whether to be designated as the default RFID for use in emulating passive RFID. Request **674** may be displayed for example, among other situations, in response to a user selecting the "edit" option, using screen **622**, or on completion of designating a RFID as the default RFID for emulating passive transponders, using screen **662**

Operationally, as illustrated in FIG. **7**, upon receipt of a request to launch the RFID function, support logic of the RFID feature **322** is loaded and given execution control, block **702**. Thereafter, support logic **322** waits for user inputs, block **704**.

On receipt of a user input/request, support logic **322** determines the nature of the input/request, block **706**, taking into the context, i.e. the portion of the user interface being displayed, and with which the user just interacted in submitting the input/request.

As illustrated, on determining that the user has requested a current display list to be scrolled (e.g. RFID list **614** of screen **612**), support logic **322** causes the list to be scrolled as requested. Thereafter, support logic **322** returns to block **708** and waits for further input.

Similarly, on determining that the user has requested a selected RFID to be sent (emulating output of the RFID by an active RFID transponder), support logic **322** causes the RFID to be outputted in a form of an appropriate RF signal (in accordance with the associated intended RFID reader type). Thereafter, support logic **322** again returns to block **710** and waits for further input.

On determining that the user has requested a list of options to be displayed (e.g. selection of "option" **616** of screen **612**), support logic **322** causes the list of options to be displayed as requested. Thereafter, support logic **322** returns to block **712** and waits for further input.

On determining that the user has requested to add a RFID (e.g. selection of "Add" of screen **622**), support logic **322** facilitates addition of a RFID (e.g. successively guiding user

entry of a RFID using screens 632-662. Thereafter, support logic **322** returns to block **714** and waits for further input.

These are a few examples of user inputs/requests support logic **322** may support. The present invention contemplates other user inputs/requests may also be supported, and handled accordingly, block **716**.

CONCLUSION AND EPILOGUE

Thus, it can be seen from the above descriptions, a novel emulated RFID input method, using a mobile communication device, has been described. The present invention advantageously improved the ease of use for a user to provide data captured in a device to another system, especially for data captured in e.g. a mobile device.

While the present invention has been described in terms of the earlier described embodiments, those skilled in the art will recognize that the invention is not limited to the embodiments described. The present invention can be practiced with modification and alteration within the spirit and scope of the appended claims. Thus, the description is to be regarded as illustrative instead of restrictive on the present invention.

What is claimed is:

1. A method for providing a radio frequency identification (RFID) from a switchable mobile communications device capable of RFID communication and voice call communication, the method comprising:

receiving, by the mobile communications device, an instruction to transmit first RFID transponder data;

switching a transceiver of the mobile communications device from a first state to a second state upon reception of said instruction, the transceiver configured to output voice call signals in the first state and to output RFID transponder signals in the second state; and

outputting the first RFID transponder data, by the transceiver as an RFID transponder signal.

2. The method of claim **1**, wherein said transceiver comprises a first signal processing unit configured to process voice call signals and a second signal processing unit configured to process RFID signals, said switching comprising coupling the second signal processing unit to a transmission path of the transceiver.

3. The method of claim **1**, wherein said first RFID transponder data comprises a selected one of a security key and an identifier.

4. The method of claim **1**, wherein the method further comprises facilitating the user in selecting the first RFID transponder data from a plurality of RFID transponder data using the mobile communication device.

5. The method of claim **1**, wherein the method comprises facilitating provision of the first RFID transponder data to the mobile communication device by facilitating provision of at least a signaling attribute associated with the outputting of the RFID transponder data in the format compatible with said RFID reader.

6. The method of claim **1**, wherein the method further comprises:

monitoring for proximal presence of the RFID reader by the mobile communication device; and

on detection of the RFID reader by the mobile communication device, outputting, by the transceiver, second RFID transponder data as a second radio frequency signal, the outputting emulating output of the second RFID transponder data by an RFID transponder of a passive type.

7. The method of claim **6**, wherein said monitoring comprises sensing for a probing radio frequency signal of the RFID reader by the mobile communication device.

8. A method for providing a radio frequency identifier (RFID), from a switchable mobile communications device capable of RFID communication and voice call communication, the method comprising:

monitoring, by the mobile communication device, for proximal presence of a proximal RFID reader, the mobile communication device having a transceiver configured, to output, in a first state, RFID transponder data to be received by the proximal RFID reader upon the mobile communications device determining proximal presence of one or more RFID readers, the transceiver being also configured to output, in a second state, a voice call signal for transmission at least in part over a wireless network; and

on detection of the RFID reader, outputting, by the transceiver, the RFID transponder data as a radio frequency signal.

9. The method of claim **8**, wherein said monitoring comprises sensing for one or more probing radio frequency signals of the one or more RFID readers by the mobile communication device.

10. The method of claim **8**, wherein said data comprises a security key.

11. The method of claim **8**, wherein the method further comprises facilitating provision of the RFID transponder data to the mobile communication device by facilitating provision of at least a signaling attribute associated with the outputting of the RFID transponder data in the format employed by the RFID reader.

12. A switchable mobile communication device capable of RFID communication and voice call communication, the mobile communication device comprising:

a transmitter configured to transmit a radio frequency signal, the transmitter comprising a first signal processing section and a second signal processing section, the first signal processing section configured to output voice call signals in a first radio frequency range and the second signal processing section configured to output RFID transponder signals in a second radio frequency range;

a storage medium to store a first data and instructions to:

monitor for proximal presence of one or more RFID readers; and

operate the transmitter to switch between the first and second signal processing sections to selectively: (a) output first RFID transponder data as said RFID transponder signals in response to detection by the mobile communication device of the proximal RFID reader, and (b) output a voice call signal for transmission over a wireless network; and

a processor coupled to the transmitter and the storage to execute the instructions.

13. The device of claim **12**, wherein said first RFID transponder data comprises a selected one of a security key and an identifier.

14. The device of claim **13**, wherein said first RFID transponder data comprises a security key, and said security key comprises a door key.

15. The device of claim **12**, wherein the instructions are further designed to facilitate the user in selecting the first RFID transponder data from a plurality of RFID transponder data, and instructing said output.

16. The device of claim **12**, wherein the instructions are further designed to facilitate provision of the first RFID transponder data to the mobile communication device.

17. The device of claim **16**, wherein the instructions are further designed to include, with said facilitating, provisioning of at least a signaling attribute associated with the outputting of the first RFID transponder data in the form of a radio frequency signal.

18. The device of claim **12**, wherein the instructions are further designed to sense for a probing radio frequency signal of the RFID reader.

19. The device of claim **12**, wherein the mobile communication device is a selected one of a wireless mobile phone and a personal digital assistant equipped with communication capability.

* * * * *