Last year, the people at Ericsson, Toshiba, Intel, Palm, and several hundred other companies were talking excitedly about the holiday selling season and the Bluetooth-enabled products they would have ready in time for it—cellular phones, personal digital assistants (PDAs), and notebook and laptop computers included. Today, only a few companies expect to have products ready for the coming holiday season, and most of them will be less technically ambitious—mere accessories for other products like headsets, remote control devices, and Bluetooth radios built into PC cards.

The key problem: interoperability, the root of all the enthusiasm for the technology. After all, few of these early devices have proven they can establish wireless contact and communicate with each other the way they are supposed to. To their chagrin, cell phone and PDA manufacturers who had hoped to begin delivering their Bluetooth products by last summer will be lucky if they can begin shipping by early next year.

Bluetooth was developed initially by Ericsson as a short-range (10 meters) cable replacement for linking portable consumer electronic products, but it can also be adapted for printers, fax machines, keyboards, toys, games, and virtually any other digital consumer application [Fig. 1]. Named after the 10th century Danish king credited with uniting the warring factions of Denmark and Norway, the technology provides a mechanism for forming small wireless networks of Bluetooth-equipped products on an *ad hoc* basis. It can also serve as a wireless bridge to existing data networks.

In what the Bluetooth community calls "unconscious" or "hidden" computing, Bluetooth-enabled products will automatically seek each other out and configure themselves into networks—most often, with just two nodes. Though small, such networks can be quite useful [Fig. 2]. They can forward e-mail received on a cellular phone in a person's pocket to the notebook or laptop computer in his or her briefcase; they can download data from a digital camera to a PC or cell phone; or they can alert their owners as they pass a Bluetooth-enabled vending machine. Bluetooth can serve as a means for connecting laptop computers or other devices to the public Internet in airport lounges and conference centers through permanent access points. It can also enable its user to exchange business cards with everyone passed on the street through a Bluetooth-enabled Palm—but not unless it has been given permission to identify the user to anyone or anything, which, according to a Merrill Lynch report on Bluetooth, "opens up whole new blind dating opportunities."

RON SCHNEIDERMAN
Contributing Editor

[1] This Ericsson T36 is a triple-band GSM phone capable of working in the 900-, 1800-, and 1900-MHz bands. It is Bluetooth enabled, which means among other things that it can connect to the headset [shown here] without needing wires of any sort. In addition to Bluetooth, the T36 supports the wireless application protocol (WAP).

Bluetooth's slow dawn

Hype gives way to hard work as expectations for the mini radio network encounter nettlesome interoperability issues

0018-9235/00/$10.00©2000 IEEE

APPLE 1017

More than 2000 organizations have joined the Bluetooth Special Interest Group (SIG) and most of them are currently developing Bluetooth-enabled products under a specification developed by the group. The IEEE 802.15 Personal Area Network (PAN) Working Group, formed early last year, has made Bluetooth the foundation for a range of consumer network products, most of them portable. The PAN Working Group is currently developing a 1-Mb/s standard based on the work of the Bluetooth SIG, and hopes to define a "consumer-priced," 20-Mb/s or faster wireless personal area network that can be widely deployed for short-range information transfer.

The expectations for Bluetooth are huge. Analysts' market projections place Bluetooth-enabled products in the "next big thing" category, with sales expected to top a billion units by 2005. Motivated by those numbers, original-equipment manufacturers (OEMs) want to get their Bluetooth products to market as soon as possible to as wide a base of users as possible. But vexing technical issues have delayed the delivery of this much-hyped technology to the marketplace.

[2] Bluetooth Infowear, a wristwatch that acts as an organizer, synchronizes information wirelessly with a PC.

INTEROPERABILITY BLUES

The principal problem is interoperability. Few of these products have met the Special Interest Group's requirements for interoperability or been tested under actual use conditions. One reason is that the qualification program was launched before conformance-test systems had been validated and were available. Not surprisingly, Bluetooth components are coming out later than expected and manufacturing capacity is limited. Another obstacle: Bluetooth products must be tested at a qualified test facility to ensure compliance with the Bluetooth specification [Table 1]. But no qualification test facilities are currently listed on the official Bluetooth Web site, as required by the Bluetooth consortium. True, some test equipment has been delivered with Bluetooth test features—Teradyne's MicroWAVE6000 instrumentation suite, for example. But no "official" or validated test hardware was available to manufacturers as of early October. Since interoperability is the be-all and end-all of Bluetooth, there is no point in coming out with a product until the spec is finalized or until some other means is in place for verifying that the item has a very good chance of working with other Bluetooth products when they become available.

Few of those involved are more frustrated than the Special Interest Group's Promoter Group. It was formed late last year by 3Com, Lucent Technologies, Microsoft, and Motorola, and joined by SIG's original founders—Ericsson, IBM, Intel, Nokia, and Toshiba. Its charter is to lead the Special Interest Group's development of Bluetooth technology and promote interoperability among members' products [see "What is Bluetooth for?," p. 63].

Investments of resources have been huge—Microsoft Corp., Redmond, Wash., for example, reportedly has at least 60 people working on Bluetooth issues at least some of the time. But progress has been slow. "I have become an expert on worrying about Bluetooth interoperability," *IEEE Spectrum* was told by Mike Foley, a wireless architect in the company's Mobile Devices Division. To help speed Bluetooth products to market, the Interest Group has created what amounts to an interim qualification program with somewhat relaxed interoperability testing.

Tests of Bluetooth products and devices are now being done against designated protocol test products called Blue Units. These are based on development kits designed by the Cadence Symbionics Group, Cambridge, UK (part of Cadence Design Systems, San Jose, Calif.) and available through Symbionics and Sweden's Ericsson Microelectronics AB, AU System, and Sigma ComTec. The development kits comprise baseband and radio boards, interfaces (universal serial bus ports, phone jacks, and RS-232-C ports), host software, accessories, and documentation. They were created to enable first-time Bluetooth design engineers to accelerate the development of prototype products and devices.

But Blue Units do not carry the weight of full compliance with the Bluetooth spec; they are simply test beds to be used to establish confidence in key Bluetooth protocols. While they can test a number of key functions, their use is limited to partial testing of the baseband and link manager software. Blue Units cannot, for example, be used to test the logical link control and adaptation protocol, which adapts upper-layer protocols over the baseband; nor can it test the service discovery protocol, which Bluetooth units use to learn about the capabilities of other Bluetooth units.

1. Key Bluetooth specifications

Characteristic	Specification	Notes
Carrier frequency, MHz	2400–2483.5 (ISM band)	Exceptions: • France: 2446.5–2483.5 • Japan: 2471–2497 • Spain: 2445–2475
Modulation	Gaussian-filtered binary frequency-shift keying at a line rate of 1 Mb/s	• Modulation index is 0.32, nominal; may range from 0.28 to 0.35. • Peak deviation allowed is 175 kHz
Hopping	Hopping rate is 1600 hops per second in normal operation; four special hopping sequences are reserved for connection setup	Periodicity of sequence is 23 hours and 18 minutes
Transmit power, mW	Class 1: 1–100 Class 2: 0.25–2.5 Class 3: 1	Power control is required by Power Class 1 but optional for other classes
Operating range, meters	0.1 to 10 meters	Up to 100 meters with Power Class 1
Maximum data throughput	The asynchronous channel can support either: • An asymmetric link with up to 721 kb/s in one direction and 57.6 kb/s in the other, or • A symmetric link with 432.6 kb/s in both directions	Data throughput is lower than the 1-Mb/s line rate because of protocol overhead

Source: Agilent Technologies Inc. ISM = industrial, scientific, and medical

GETTING IN STEP

The tests a product manufacturer has to pass to qualify a product for a Bluetooth trademark are divided into four areas:

- Radio frequency qualification testing.
- Protocol conformance testing.
- Profile conformance testing.
- Profile interoperability testing.

Protocols describe how Bluetooth-enabled devices perform such basic tasks as service discovery, telephony signaling, and link management. Profiles specify which basic protocols and procedures are required for specific categories of Bluetooth devices and applications, like cordless telephones, headsets, and faxing. Profiles are the primary means for achieving interoperability among Bluetooth-enabled devices.

Currently available profiles cover cordless telephony, intercoms, serial ports, headsets, fax machines, local-area network access, file transfer, and dial-up networking. One group, chaired by Philips Semiconductor, Sunnyvale, Calif., expects to complete a written specification on three audio and three video applications by mid-2001. More than simply replacing cables for wireless speakers using Bluetooth technology, the group aspires to create applications that will make audio/video equipment interoperable with assorted consumer electronic products, as in moving data between a Bluetooth-enabled cell phone and a PC, or remotely changing channels and controlling the volume on television sets. Bluetooth accessories, such as PC Cards and USB dongles (security devices), are treated differently: they may be submitted for complete qualification testing only when they are installed in a host product.

Other working groups within the Special Interest Group are writing profiles for printing, imaging, location positioning, human interface devices, and personal area networks. Medical, automotive, and some other Bluetooth applications will require additional product certification.

Naturally, qualification requirements are expected to evolve as test equipment and procedures become available. In the meantime, designers must pass a series of tests based on four test reference categories established by the Bluetooth consortium. The categories range from merely informative, through self-testing, to full testing by a certified test facility using a validated reference test system. Since no validated test systems are yet available, the Special Interest Group is for the time being waiving the most rigorous category for manufacturers who pass the less strict of the categories and who successfully test their products against a Blue Unit.

Even that may not do the trick, though. "The Category A [most rigorous] test gives you a certain level of confidence that you

What is Bluetooth for?

When the last morning speaker during a recent Bluetooth conference wrapped up a half hour earlier than expected, R.E. ("Skip") Bryan, suggested that, rather than breaking early for lunch, the 120 attendees could make good use of the time by brainstorming new ideas for profiles that could lead to new applications for Bluetooth. "In the spirit of this kind of forum, no idea is too silly," said Bryan, director of technical marketing for Ericsson's Standards Business Group,.

One attendee thought it would be neat to have "a system that will automatically reset all the digital clocks in my house following a power outage." Another idea, whispered among a few young engineers sitting in the back of the room, was a Bluetooth link between their roller blades and a speedometer in a digital watch.

These would probably work, but most of the more than 2000 member companies of the Bluetooth Special Interest Group (SIG) are counting initially on big-number applications, such as cell phones and Palm-type personal digital assistants (PDAs). Although originally thought of simply as a replacement for the unseemly nest of wires that connects PCs to keyboards and printers, Bluetooth quickly evolved into a system that will allow people to detect and communicate with each other through a variety of mainly portable devices without their users' intervention. Bluetooth-enabled devices will be able to "talk" to each other as they come into range, which is about 10 meters, although this figure can be extended to more than 100 meters by increasing the transmit power from a nominal 1 mW to as much as 100 mW.

With Bluetooth technology, you can send e-mail from the computer on your lap to the cellular phone in your briefcase. Your Bluetooth-linked cell phone or similarly equipped PDA can automatically synchronize with your desktop PC whenever you pass it within Bluetooth range. Or, you can have hands-free communications between a Bluetooth-enabled headset and a cell phone,or you can download images from a digital camera to a PC or cell phone.

Critical mass is critical to Bluetooth's success. Bluetooth technology is expected to make its debut in cell phones and PDAs, but then will move quickly into notebook and laptop computers, printers, scanners, digital cameras, household appliances, security/remote access, games, toys, and more. "Adoption is the first and foremost concern in the Bluetooth space," said Randy Giusto, vice president of Desktop and Mobile Research at International Data Corp., Framingham, Mass. "The key for a communications technology is that it has other devices to talk to. Without other devices supporting Bluetooth, the technology is useless."

Ericsson, which started it all with the development of the Bluetooth concept, has already announced several Bluetooth products, including a headset, a PC Card for laptops and PDAs, and two Bluetooth cell phones. A Bluetooth keyboard and mouse are on the drawing board.

Nokia and Fujifilm are working on a mobile imaging technology they believe would enable Nokia to add a Bluetooth chip to its clamshell-shaped 9110 Communicator so that it could receive images taken on a Bluetooth-equipped Fujifilm digital camera. After the addition of a few lines of text, the received photographs can be sent to another Nokia Communicator, or to the Fujifilm Web service, where it can be viewed, printed, or burned into a CD-ROM.

Finnish telecom operator Sonera has even demonstrated a Bluetooth-enabled vending machine— consumers buy products out of the machine by simply signaling an account code from a Bluetooth cell phone or PDA. The code would debit the user's account based on the code. Eventually, cell phones and PDAs are expected to be able to display personal bar codes, which can be read by a vending machine scanner.

The Gartner Group calls it the Supranet—the wireless connection of data and transactions between the hard-wire Internet, wireless devices such as cell phones and PDAs, and the "papernet," meaning the physical world of business cards and legal documents. Emerging seamless connections will deliver a whole host of new technologies, according to Gartner, with one of the first integral technologies to be tied to the Supranet being Bluetooth. By 2004, according to Gartner, 70 percent of new cell phones and 40 percent of new PDAs will use wireless technology for direct access to Web content and enterprise networks. Gartner believes that Bluetooth is set to become a defining force in portable electronic products.

But there is still plenty to do before the distinctive Bluetooth logo becomes ubiquitous. "It is very important," said Brent Miller, a senior software engineer in IBM Corp.'s Pervasive Computing Division, Research Triangle Park, N.C., and chair of the Service Discovery Task Force of the Bluetooth SIG, "that we get the cable replacement feature working first. Then, we can pursue the other neat stuff." —*R.S.*

will be interoperable with other Bluetooth devices," said Cedric Paillard, product marketing manager of Conexant Systems Inc. "It doesn't guarantee that you will be interoperable in the real world." Conexant acquired Ontario-based Philsar Semiconductor earlier this year to help speed its entry into the Bluetooth chip market. At some point, when the necessary tools are in place, Bluetooth products will all have to pass the most rigorous tests and also show that they are interoperable with what is called a "Golden Unit"—a SIG-designated unit that has passed all the required qualification and conformance tests.

Current plans call for continuing Blue Unit testing for a while after validated protocol conformance test systems have become available. Until then, the specifications remain the only authoritative source for compliance. At present it appears likely that RF testing to the level of Category A will begin at the end of December, with Blue Unit tests being removed some time next year.

FULL COMPLIANCE

As with all other RF devices, Bluetooth products will require regulatory type approval by international or national telecommunications regulatory bodies like the Federal Communications Commission in the United States. In real terms, Brad Tipler of Intel Corp., chairman of the Bluetooth Qualification Review Board, said, "The qualification process means it complies with the spec; it's a Bluetooth license. Type approval is a [government-issued] license to sell." Once a manufacturer has passed both tests, the item can be launched onto the world market with the Bluetooth trademark.

Because Bluetooth is still in its early development stages, test methodologies differ

Bluetooth basics

A Bluetooth radio consists of a radio-frequency (RF) transceiver portion, a baseband link control unit, and the associated link management software, plus an antenna subsystem. The transmitter mixes the baseband information with the (frequency-hopping) local oscillator to generate a frequency-modulated carrier. In alternate time slots, the receiver downconverts and demodulates the RF signal, using the same local oscillator.

The radio uses frequency-hopping spread-spectrum technology to support both point-to-point and point-to-multipoint connections. In North America and most of Europe, it hops among 79 channels, spaced 1 MHz apart, between 2.4000 GHz and 2.4835 GHz, in the unlicensed industrial, scientific, and medical (ISM) band. In France and Spain, where less spectrum space is currently available, the system has only 23 channels [see figure below].

Under the current specification, up to eight Bluetooth-enabled devices can automatically configure themselves into a "piconet," with one designated as the master and seven slaves. The piconet is distinguished from other similar nets in the vicinity by its frequency-hopping sequence. Although a piconet can comprise no more than eight devices, its coverage can be extended by attaching one of the slaves to other piconets. That is, in Bluetooth, a slave can serve more than one master.

Several of these piconets can be established and linked together in *ad hoc* scatternets (multiple independent and nonsynchronized piconets) to enable communication among continually flexible configurations.

Bluetooth has a system hopping rate of 1600 hops per second, which means that a transmission dwells at each carrier frequency for 625 µs. During each 625-µs time slot, it transmits one packet, from the master to the slave on the even-numbered slots, and in the other direction on the odd ones. Data is transmitted at a rate of 1 Mb/s with a binary frequency-modulation scheme, in which the carrier simply shifts up or down in frequency by about 150 kHz to represent, respectively, a 1 or a 0.

The Bluetooth baseband protocol allows for both circuit- and packet-switching, making it suitable for both voice and data. Synchronous links can be set up for voice connections (as required, for example, in headsets, cordless telephones, and intercoms) by using reserved time slots. Asynchronous links are dedicated to data connections (dial-up networking, facsimile, local-area network access, and so on). The asynchronous channel can support an asymmetric link of up to 721 kb/s in either direction, while permitting 57.6 kb/s in the return direction, or a 432.6-kb/s symmetric link. This is expected to be fast enough to cope with the vast majority of proposed data rates over the cellular system. *—R.S.*

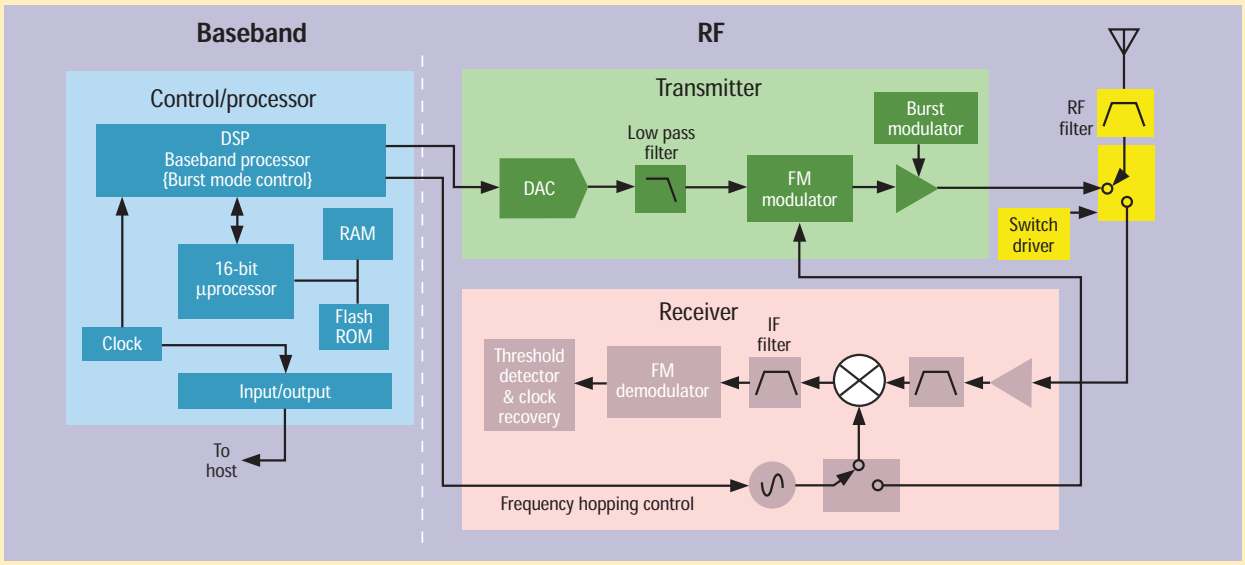

The Bluetooth transmitter upconverts the baseband information to the frequency-modulated carrier. Frequency hopping and bursting are performed at this level. Conversely, the Bluetooth receiver downconverts and demodulates the RF signal. The Bluetooth channels are each 1 MHz wide. Frequency hopping occurs over 79 channels.

from those typical of more highly developed technologies. A Bluetooth application note published by Agilent Technologies Inc. suggests that "[Bluetooth] test procedures may require manual intervention or custom software control, as opposed to mature technologies in which easy-to-use, one-button measurements are available."

Part of the problem, according to Peter Cain, Agilent's Bluetooth guru, is that it has taken a long time for test houses to develop equipment with Bluetooth features, so that many Bluetooth designers have been forced to create their own test sequences and methods based on Bluetooth specifications.

Indeed, said David Lyon, chairman and chief executive officer of Silicon Wave Inc., San Diego, Calif., a Bluetooth chip vendor, "individual test houses have procured combinations of third-party gear and, in some cases, are using home-grown hardware and software to test both protocols and RF compliance." Several companies, he said, including his own, have built their own specialized testers in order to stress-test equipment under various combinations of protocol exercises while simultaneously monitoring RF parameters.

IC vendors and OEMs are using these home-grown test systems in so-called Unplugfests to test their products against other companies' Bluetooth products. Three of these events have been held so far, the most recent in August at the European Telecommunications Standards Institute in France. A fourth is scheduled for this month.

UNPLUGFEST IS NO PARTY

While they are not a part of the formal Bluetooth Qualification Program, the Unplugfests are very tightly controlled under nondisclosure agreements between participants. "We can't say where we are relative to others," said Matthew Phillips, marketing manager for Cambridge Silicon Radio Ltd., Cambridge, UK. "We can't talk about specific Unplugfest manufacturers and their specific problems."

In spite of the secrecy, it has become steadily clearer that finalizing the RF side of their design is one of the biggest problems facing would-be Bluetooth manufacturers. Indeed, Rangestar Wireless Inc., of Aptos, Calif., which is helping several companies develop Bluetooth designs, estimates that as many as three-quarters of the more than 2000 SIG members have little or no previous experience in RF or wireless design [see "Bluetooth basics," p. 64].

Hoping to speed Bluetooth products to market, the SIG has formed the Bluetooth Measurement Initiative, whose task it is to work with test manufacturers to develop hardware and software for interoperability testing. In fact, third-party test equipment and software is now becoming generally available with preset Bluetooth tests.

Rohde & Schwarz is delivering what it says is the "first test system worldwide (the TS8960) specifically for Bluetooth equipment and components." Agilent Technologies introduced a Bluetooth DesignGuide in September, which is essentially an application layer that may be added to Agilent's Advanced Design System. It contains "system test benches" and reference designs, such as an optimal low-intermediate frequency (IF) receiver, for part of the RF portion of the Bluetooth physical layer. In October, Agilent also introduced a peak and average power sensor that covers the Bluetooth bandwidth.

Also, in October, Tektronix began shipping the CMU200 universal radio communications tester it announced in June. The CMU200 is a multi-standard test set for mobile phones with Bluetooth test features. Teradyne has shipped its MicroWAVE6000 instrumentation suite for testing Bluetooth radios and ICs to Ericsson, Oki, and Cambridge Silicon Radio, and has said it has several other customers lined up.

With these new test products now hitting the market, "the pace of testing should pick up over the next several months," according to Ron Wong, director of marketing of San Diego–based Widcomm, which produces the BlueStack protocol stack software. All the same, none of this test hardware has yet received "official" Bluetooth test status or been validated for Bluetooth testing.

Qualification grants companies the worldwide right to incorporate Bluetooth wireless technology in their products, and to use the Bluetooth trademark; but even the trademark does not guarantee that a product complies fully with Bluetooth specifications. Passing the qualification program demonstrates a certain measure of compliance and interoperability, but—as the Bluetooth SIG notes in its own literature—because products are not tested for every aspect of the Bluetooth specification, qualification does not guarantee compliance. In the final analysis, each manufacturer is responsible for ensuring that its products will interoperate with products from other Bluetooth manufacturers.

With several companies, mostly start-ups like San Diego's Silicon Wave and Britain's Cambridge Silicon Radio, all but betting the ranch on the success of Bluetooth, it is going to be difficult to soften the hype and face the reality of creating electronic products with an entirely new communications interface. But, then, this is supposed to be a joint effort and, as one market analyst put it, 2000 companies can't be wrong. ◆

Defining terms

Dongle: a small security device that attaches to a computer port to control access to a specific software application. A dongle-protected program will run only when its dongle is attached to the computer.

Piconet: two or more Bluetooth units sharing the same channel—that is, operating in synchronism and following the same hopping sequence.

Profile: a document that describes exactly how different basic protocols and procedures work together in various kinds of Bluetooth devices and applications.

Service discovery protocol (SDP): a procedure used by Bluetooth-enabled devices to determine what services are available from or through other Bluetooth-enabled devices.

TO PROBE FURTHER

A good book for learning all about Bluetooth is *Bluetooth Revealed—An Insider's Guide To The Open Specification For Global Wireless Communications,* which was published in October by Prentice Hall. The authors are Brent A. Miller, senior software engineer in the Pervasive Computing Group at IBM Research Triangle Park, and Chatschik Bisdikian, a research staff member with IBM's Thomas J. Watson Research Center.

Engineers interested in testing Bluetooth devices and systems are advised to get a copy of "Performing Bluetooth RF Measurements Today," a detailed application note from Agilent Technologies. Ask for Application Note No. 1333.

Key Bluetooth Web sites include:

• http://www.bluetooth.com, the official Web site of the Bluetooth Special Interest Group (SIG). It offers background information and updates on Bluetooth technology developments and products, membership information, and copies of SIGnals, the SIG newsletter.

• the site at http://www.topsitelists.com/bestsites/bluetooth/, which lists 20 Bluetooth company sites, with access to each site. The sites are ranked by "hits" per day.

• http://www.mot.com/bluetooth/, Motorola's Bluetooth-specific Web site. It includes user applications, links to other Bluetooth sites, news, a calendar of events, a frequently asked questions section, and a glossary of terms.

Spectrum editor: Michael J. Riezenman