UNITED STATES PATENT AND TRADEMARK OFFICE

UNITED STATES DEPARTMENT OF COMMERCE
United States Patent and Trademark Office
Address: COMMISSIONER FOR PATENTS
P.O. Box 1450
Alexandria, Virginia 22313-1450
www.uspto.gov

APPLICATION NO.	ISSUE DATE	PATENT NO.	ATTORNEY DOCKET NO.	CONFIRMATION NO.
10/560,262	03/06/2012	8127984	120083-146181	3358

60172 7590 02/15/2012
SCHWABE, WILLIAMSON & WYATT, P.C.
1420 FIFTH AVENUE, SUITE 3400
SEATTLE, WA 98101-4010

ISSUE NOTIFICATION

The projected patent number and issue date are specified above.

Determination of Patent Term Adjustment under 35 U.S.C. 154 (b)
(application filed on or after May 29, 2000)

The Patent Term Adjustment is 978 day(s). Any patent to issue from the above-identified application will include an indication of the adjustment on the front page.

If a Continued Prosecution Application (CPA) was filed in the above-identified application, the filing date that determines Patent Term Adjustment is the filing date of the most recent CPA.

Applicant will be able to obtain more detailed information by accessing the Patent Application Information Retrieval (PAIR) WEB site (http://pair.uspto.gov).

Any questions regarding the Patent Term Extension or Adjustment determination should be directed to the Office of Patent Legal Administration at (571)-272-7702. Questions relating to issue and publication fee payments should be directed to the Application Assistance Unit (AAU) of the Office of Data Management (ODM) at (571)-272-4200.

APPLICANT(s) (Please see PAIR WEB site http://pair.uspto.gov for additional applicants):

Peter Zatloukal, Kirkland, WA;
G. Eric Engstrom, Kirkland, WA;
Cindy M. Smith, Kirkland, WA;

IR103 (Rev. 10/09)

APPLE 1008

PART B - FEE(S) TRANSMITTAL

Complete and send this form, together with applicable fee(s), to: Mail **Mail Stop ISSUE FEE**
Commissioner for Patents
P.O. Box 1450
Alexandria, Virginia 22313-1450
or Fax (571)-273-2885

INSTRUCTIONS: This form should be used for transmitting the ISSUE FEE and PUBLICATION FEE (if required). Blocks 1 through 5 should be completed where appropriate. All further correspondence including the Patent, advance orders and notification of maintenance fees will be mailed to the current correspondence address as indicated unless corrected below or directed otherwise in Block 1, by (a) specifying a new correspondence address; and/or (b) indicating a separate "FEE ADDRESS" for maintenance fee notifications.

CURRENT CORRESPONDENCE ADDRESS (Note: Use Block 1 for any change of address)

60172 7590 11/01/2011
SCHWABE, WILLIAMSON & WYATT, P.C.
1420 FIFTH AVENUE, SUITE 3400
SEATTLE, WA 98101-4010

Note: A certificate of mailing can only be used for domestic mailings of the Fee(s) Transmittal. This certificate cannot be used for any other accompanying papers. Each additional paper, such as an assignment or formal drawing, must have its own certificate of mailing or transmission.

Certificate of Mailing or Transmission
I hereby certify that this Fee(s) Transmittal is being deposited with the United States Postal Service with sufficient postage for first class mail in an envelope addressed to the Mail Stop ISSUE FEE address above, or being facsimile transmitted to the USPTO (571) 273-2885, on the date indicated below.

(Depositor's name)
(Signature)
(Date)

APPLICATION NO.	FILING DATE	FIRST NAMED INVENTOR	ATTORNEY DOCKET NO.	CONFIRMATION NO.
10/560,262	12/09/2005	Peter Zatloukal	120083-146181	3358

TITLE OF INVENTION: EMULATED RADIO FREQUENCY IDENTIFICATION

APPLN. TYPE	SMALL ENTITY	ISSUE FEE DUE	PUBLICATION FEE DUE	PREV. PAID ISSUE FEE	TOTAL FEE(S) DUE	DATE DUE
nonprovisional	YES	$870	$300	$0	$1170	02/01/2012

EXAMINER	ART UNIT	CLASS-SUBCLASS
WALSH, DANIEL I	2887	235-380000

1. Change of correspondence address or indication of "Fee Address" (37 CFR 1.363).
- ☐ Change of correspondence address (or Change of Correspondence Address form PTO/SB/122) attached.
- ☐ "Fee Address" indication (or "Fee Address" Indication form PTO/SB/47; Rev 03-02 or more recent) attached. **Use of a Customer Number is required.**

2. For printing on the patent front page, list
(1) the names of up to 3 registered patent attorneys or agents OR, alternatively,
(2) the name of a single firm (having as a member a registered attorney or agent) and the names of up to 2 registered patent attorneys or agents. If no name is listed, no name will be printed.

1 Schwabe, WIlliamson & Wyatt, P.C.
2
3

3. ASSIGNEE NAME AND RESIDENCE DATA TO BE PRINTED ON THE PATENT (print or type)

PLEASE NOTE: Unless an assignee is identified below, no assignee data will appear on the patent. If an assignee is identified below, the document has been filed for recordation as set forth in 37 CFR 3.11. Completion of this form is NOT a substitute for filing an assignment.

(A) NAME OF ASSIGNEE: Varia Holdings LLC
(B) RESIDENCE: (CITY and STATE OR COUNTRY): Brooklyn, NY

Please check the appropriate assignee category or categories (will not be printed on the patent) : ☐ Individual ☒ Corporation or other private group entity ☐ Government

4a. The following fee(s) are submitted:
- ☒ Issue Fee
- ☒ Publication Fee (No small entity discount permitted)
- ☐ Advance Order - # of Copies _____

4b. Payment of Fee(s): **(Please first reapply any previously paid issue fee shown above)**
- ☐ A check is enclosed.
- ☐ Payment by credit card. Form PTO-2038 is attached.
- ☒ The Director is hereby authorized to charge the required fee(s), any deficiency, or credit any overpayment, to Deposit Account Number 500393 (enclose an extra copy of this form).

5. **Change in Entity Status** (from status indicated above)
- ☐ a. Applicant claims SMALL ENTITY status. See 37 CFR 1.27.
- ☐ b. Applicant is no longer claiming SMALL ENTITY status. See 37 CFR 1.27(g)(2).

NOTE: The Issue Fee and Publication Fee (if required) will not be accepted from anyone other than the applicant; a registered attorney or agent; or the assignee or other party in interest as shown by the records of the United States Patent and Trademark Office.

Authorized Signature /Ryan C. Fox/ Date January 31, 2012

Typed or printed name Ryan C. Fox Registration No. 65,369

This collection of information is required by 37 CFR 1.311. The information is required to obtain or retain a benefit by the public which is to file (and by the USPTO to process) an application. Confidentiality is governed by 35 U.S.C. 122 and 37 CFR 1.14. This collection is estimated to take 12 minutes to complete, including gathering, preparing, and submitting the completed application form to the USPTO. Time will vary depending upon the individual case. Any comments on the amount of time you require to complete this form and/or suggestions for reducing this burden, should be sent to the Chief Information Officer, U.S. Patent and Trademark Office, U.S. Department of Commerce, P.O. Box 1450, Alexandria, Virginia 22313-1450. DO NOT SEND FEES OR COMPLETED FORMS TO THIS ADDRESS. SEND TO: Commissioner for Patents, P.O. Box 1450, Alexandria, Virginia 22313-1450.

Under the Paperwork Reduction Act of 1995, no persons are required to respond to a collection of information unless it displays a valid OMB control number.

Electronic Patent Application Fee Transmittal

Application Number:	10560262
Filing Date:	09-Dec-2005
Title of Invention:	EMULATED RADIO FREQUENCY IDENTIFICATION
First Named Inventor/Applicant Name:	Peter Zatloukal
Filer:	Ryan Christopher Fox/Allyson Dahmen
Attorney Docket Number:	120083-146181

Filed as Small Entity

U.S. National Stage under 35 USC 371 Filing Fees

Description	Fee Code	Quantity	Amount	Sub-Total in USD($)
Basic Filing:				
Pages:				
Claims:				
Miscellaneous-Filing:				
Petition:				
Patent-Appeals-and-Interference:				
Post-Allowance-and-Post-Issuance:				
Utility Appl issue fee	2501	1	870	870
Publ. Fee- early, voluntary, or normal	1504	1	300	300

Description	Fee Code	Quantity	Amount	Sub-Total in USD($)
Extension-of-Time:				
Miscellaneous:				
		Total in USD ($)		**1170**

Electronic Acknowledgement Receipt

EFS ID:	11968295
Application Number:	10560262
International Application Number:	
Confirmation Number:	3358
Title of Invention:	EMULATED RADIO FREQUENCY IDENTIFICATION
First Named Inventor/Applicant Name:	Peter Zatloukal
Customer Number:	60172
Filer:	Ryan Christopher Fox/Allyson Dahmen
Filer Authorized By:	Ryan Christopher Fox
Attorney Docket Number:	120083-146181
Receipt Date:	31-JAN-2012
Filing Date:	09-DEC-2005
Time Stamp:	18:21:49
Application Type:	U.S. National Stage under 35 USC 371

Payment information:

Submitted with Payment	yes
Payment Type	Deposit Account
Payment was successfully received in RAM	$1170
RAM confirmation Number	7989
Deposit Account	500393
Authorized User	

File Listing:

Document Number	Document Description	File Name	File Size(Bytes)/ Message Digest	Multi Part /.zip	Pages (if appl.)

1	Issue Fee Payment (PTO-85B)	Varia_P064_IF.pdf	516583 01869840e2dd46e9645aba47927c7251b5b74b48	no	1
Warnings:					
Information:					
2	Fee Worksheet (SB06)	fee-info.pdf	31918 300219db5bf83c1343bf77bd4f75f21d38f54cc3	no	2
Warnings:					
Information:					
			Total Files Size (in bytes):	548501	

This Acknowledgement Receipt evidences receipt on the noted date by the USPTO of the indicated documents, characterized by the applicant, and including page counts, where applicable. It serves as evidence of receipt similar to a Post Card, as described in MPEP 503.

<u>New Applications Under 35 U.S.C. 111</u>
If a new application is being filed and the application includes the necessary components for a filing date (see 37 CFR 1.53(b)-(d) and MPEP 506), a Filing Receipt (37 CFR 1.54) will be issued in due course and the date shown on this Acknowledgement Receipt will establish the filing date of the application.

<u>National Stage of an International Application under 35 U.S.C. 371</u>
If a timely submission to enter the national stage of an international application is compliant with the conditions of 35 U.S.C. 371 and other applicable requirements a Form PCT/DO/EO/903 indicating acceptance of the application as a national stage submission under 35 U.S.C. 371 will be issued in addition to the Filing Receipt, in due course.

<u>New International Application Filed with the USPTO as a Receiving Office</u>
If a new international application is being filed and the international application includes the necessary components for an international filing date (see PCT Article 11 and MPEP 1810), a Notification of the International Application Number and of the International Filing Date (Form PCT/RO/105) will be issued in due course, subject to prescriptions concerning national security, and the date shown on this Acknowledgement Receipt will establish the international filing date of the application.

UNITED STATES PATENT AND TRADEMARK OFFICE

UNITED STATES DEPARTMENT OF COMMERCE
United States Patent and Trademark Office
Address: COMMISSIONER FOR PATENTS
P.O. Box 1450
Alexandria, Virginia 22313-1450
www.uspto.gov

NOTICE OF ALLOWANCE AND FEE(S) DUE

60172 7590 11/01/2011
SCHWABE, WILLIAMSON & WYATT, P.C.
1420 FIFTH AVENUE, SUITE 3400
SEATTLE, WA 98101-4010

EXAMINER
WALSH, DANIEL I

ART UNIT	PAPER NUMBER
2887	

DATE MAILED: 11/01/2011

APPLICATION NO.	FILING DATE	FIRST NAMED INVENTOR	ATTORNEY DOCKET NO.	CONFIRMATION NO.
10/560,262	12/09/2005	Peter Zatloukal	120083-146181	3358

TITLE OF INVENTION: EMULATED RADIO FREQUENCY IDENTIFICATION

APPLN. TYPE	SMALL ENTITY	ISSUE FEE DUE	PUBLICATION FEE DUE	PREV. PAID ISSUE FEE	TOTAL FEE(S) DUE	DATE DUE
nonprovisional	NO	$1740	$300	$0	$2040	02/01/2012

THE APPLICATION IDENTIFIED ABOVE HAS BEEN EXAMINED AND IS ALLOWED FOR ISSUANCE AS A PATENT. PROSECUTION ON THE MERITS IS CLOSED. THIS NOTICE OF ALLOWANCE IS NOT A GRANT OF PATENT RIGHTS. THIS APPLICATION IS SUBJECT TO WITHDRAWAL FROM ISSUE AT THE INITIATIVE OF THE OFFICE OR UPON PETITION BY THE APPLICANT. SEE 37 CFR 1.313 AND MPEP 1308.

THE ISSUE FEE AND PUBLICATION FEE (IF REQUIRED) MUST BE PAID WITHIN THREE MONTHS FROM THE MAILING DATE OF THIS NOTICE OR THIS APPLICATION SHALL BE REGARDED AS ABANDONED. THIS STATUTORY PERIOD CANNOT BE EXTENDED. SEE 35 U.S.C. 151. THE ISSUE FEE DUE INDICATED ABOVE DOES NOT REFLECT A CREDIT FOR ANY PREVIOUSLY PAID ISSUE FEE IN THIS APPLICATION. IF AN ISSUE FEE HAS PREVIOUSLY BEEN PAID IN THIS APPLICATION (AS SHOWN ABOVE), THE RETURN OF PART B OF THIS FORM WILL BE CONSIDERED A REQUEST TO REAPPLY THE PREVIOUSLY PAID ISSUE FEE TOWARD THE ISSUE FEE NOW DUE.

HOW TO REPLY TO THIS NOTICE:

I. Review the SMALL ENTITY status shown above.

If the SMALL ENTITY is shown as YES, verify your current SMALL ENTITY status:

A. If the status is the same, pay the TOTAL FEE(S) DUE shown above.

B. If the status above is to be removed, check box 5b on Part B - Fee(s) Transmittal and pay the PUBLICATION FEE (if required) and twice the amount of the ISSUE FEE shown above, or

If the SMALL ENTITY is shown as NO:

A. Pay TOTAL FEE(S) DUE shown above, or

B. If applicant claimed SMALL ENTITY status before, or is now claiming SMALL ENTITY status, check box 5a on Part B - Fee(s) Transmittal and pay the PUBLICATION FEE (if required) and 1/2 the ISSUE FEE shown above.

II. PART B - FEE(S) TRANSMITTAL, or its equivalent, must be completed and returned to the United States Patent and Trademark Office (USPTO) with your ISSUE FEE and PUBLICATION FEE (if required). If you are charging the fee(s) to your deposit account, section "4b" of Part B - Fee(s) Transmittal should be completed and an extra copy of the form should be submitted. If an equivalent of Part B is filed, a request to reapply a previously paid issue fee must be clearly made, and delays in processing may occur due to the difficulty in recognizing the paper as an equivalent of Part B.

III. All communications regarding this application must give the application number. Please direct all communications prior to issuance to Mail Stop ISSUE FEE unless advised to the contrary.

IMPORTANT REMINDER: Utility patents issuing on applications filed on or after Dec. 12, 1980 may require payment of maintenance fees. It is patentee's responsibility to ensure timely payment of maintenance fees when due.

PART B - FEE(S) TRANSMITTAL

Complete and send this form, together with applicable fee(s), to: Mail **Mail Stop ISSUE FEE**
Commissioner for Patents
P.O. Box 1450
Alexandria, Virginia 22313-1450
or Fax (571)-273-2885

INSTRUCTIONS: This form should be used for transmitting the ISSUE FEE and PUBLICATION FEE (if required). Blocks 1 through 5 should be completed where appropriate. All further correspondence including the Patent, advance orders and notification of maintenance fees will be mailed to the current correspondence address as indicated unless corrected below or directed otherwise in Block 1, by (a) specifying a new correspondence address; and/or (b) indicating a separate "FEE ADDRESS" for maintenance fee notifications.

CURRENT CORRESPONDENCE ADDRESS (Note: Use Block 1 for any change of address)

60172 7590 11/01/2011
SCHWABE, WILLIAMSON & WYATT, P.C.
1420 FIFTH AVENUE, SUITE 3400
SEATTLE, WA 98101-4010

Note: A certificate of mailing can only be used for domestic mailings of the Fee(s) Transmittal. This certificate cannot be used for any other accompanying papers. Each additional paper, such as an assignment or formal drawing, must have its own certificate of mailing or transmission.

Certificate of Mailing or Transmission

I hereby certify that this Fee(s) Transmittal is being deposited with the United States Postal Service with sufficient postage for first class mail in an envelope addressed to the Mail Stop ISSUE FEE address above, or being facsimile transmitted to the USPTO (571) 273-2885, on the date indicated below.

(Depositor's name)
(Signature)
(Date)

APPLICATION NO.	FILING DATE	FIRST NAMED INVENTOR	ATTORNEY DOCKET NO.	CONFIRMATION NO.
10/560,262	12/09/2005	Peter Zatloukal	120083-146181	3358

TITLE OF INVENTION: EMULATED RADIO FREQUENCY IDENTIFICATION

APPLN. TYPE	SMALL ENTITY	ISSUE FEE DUE	PUBLICATION FEE DUE	PREV. PAID ISSUE FEE	TOTAL FEE(S) DUE	DATE DUE
nonprovisional	NO	$1740	$300	$0	$2040	02/01/2012

EXAMINER	ART UNIT	CLASS-SUBCLASS
WALSH, DANIEL I	2887	235-380000

1. Change of correspondence address or indication of "Fee Address" (37 CFR 1.363).

❑ Change of correspondence address (or Change of Correspondence Address form PTO/SB/122) attached.

❑ "Fee Address" indication (or "Fee Address" Indication form PTO/SB/47; Rev 03-02 or more recent) attached. **Use of a Customer Number is required.**

2. For printing on the patent front page, list

(1) the names of up to 3 registered patent attorneys or agents OR, alternatively,

(2) the name of a single firm (having as a member a registered attorney or agent) and the names of up to 2 registered patent attorneys or agents. If no name is listed, no name will be printed.

1_____
2_____
3_____

3. ASSIGNEE NAME AND RESIDENCE DATA TO BE PRINTED ON THE PATENT (print or type)

PLEASE NOTE: Unless an assignee is identified below, no assignee data will appear on the patent. If an assignee is identified below, the document has been filed for recordation as set forth in 37 CFR 3.11. Completion of this form is NOT a substitute for filing an assignment.

(A) NAME OF ASSIGNEE (B) RESIDENCE: (CITY and STATE OR COUNTRY)

Please check the appropriate assignee category or categories (will not be printed on the patent) : ❑ Individual ❑ Corporation or other private group entity ❑ Government

4a. The following fee(s) are submitted:

❑ Issue Fee
❑ Publication Fee (No small entity discount permitted)
❑ Advance Order - # of Copies _____

4b. Payment of Fee(s): **(Please first reapply any previously paid issue fee shown above)**

❑ A check is enclosed.
❑ Payment by credit card. Form PTO-2038 is attached.
❑ The Director is hereby authorized to charge the required fee(s), any deficiency, or credit any overpayment, to Deposit Account Number _____ (enclose an extra copy of this form).

5. **Change in Entity Status** (from status indicated above)

❑ a. Applicant claims SMALL ENTITY status. See 37 CFR 1.27. ❑ b. Applicant is no longer claiming SMALL ENTITY status. See 37 CFR 1.27(g)(2).

NOTE: The Issue Fee and Publication Fee (if required) will not be accepted from anyone other than the applicant; a registered attorney or agent; or the assignee or other party in interest as shown by the records of the United States Patent and Trademark Office.

Authorized Signature _____ Date _____

Typed or printed name _____ Registration No. _____

This collection of information is required by 37 CFR 1.311. The information is required to obtain or retain a benefit by the public which is to file (and by the USPTO to process) an application. Confidentiality is governed by 35 U.S.C. 122 and 37 CFR 1.14. This collection is estimated to take 12 minutes to complete, including gathering, preparing, and submitting the completed application form to the USPTO. Time will vary depending upon the individual case. Any comments on the amount of time you require to complete this form and/or suggestions for reducing this burden, should be sent to the Chief Information Officer, U.S. Patent and Trademark Office, U.S. Department of Commerce, P.O. Box 1450, Alexandria, Virginia 22313-1450. DO NOT SEND FEES OR COMPLETED FORMS TO THIS ADDRESS. SEND TO: Commissioner for Patents, P.O. Box 1450, Alexandria, Virginia 22313-1450.

Under the Paperwork Reduction Act of 1995, no persons are required to respond to a collection of information unless it displays a valid OMB control number.

UNITED STATES PATENT AND TRADEMARK OFFICE

UNITED STATES DEPARTMENT OF COMMERCE
United States Patent and Trademark Office
Address: COMMISSIONER FOR PATENTS
P.O. Box 1450
Alexandria, Virginia 22313-1450
www.uspto.gov

APPLICATION NO.	FILING DATE	FIRST NAMED INVENTOR	ATTORNEY DOCKET NO.	CONFIRMATION NO.
10/560,262	12/09/2005	Peter Zatloukal	120083-146181	3358

60172 7590 11/01/2011
SCHWABE, WILLIAMSON & WYATT, P.C.
1420 FIFTH AVENUE, SUITE 3400
SEATTLE, WA 98101-4010

EXAMINER
WALSH, DANIEL I

ART UNIT	PAPER NUMBER
2887	

DATE MAILED: 11/01/2011

Determination of Patent Term Adjustment under 35 U.S.C. 154 (b)
(application filed on or after May 29, 2000)

The Patent Term Adjustment to date is 698 day(s). If the issue fee is paid on the date that is three months after the mailing date of this notice and the patent issues on the Tuesday before the date that is 28 weeks (six and a half months) after the mailing date of this notice, the Patent Term Adjustment will be 698 day(s).

If a Continued Prosecution Application (CPA) was filed in the above-identified application, the filing date that determines Patent Term Adjustment is the filing date of the most recent CPA.

Applicant will be able to obtain more detailed information by accessing the Patent Application Information Retrieval (PAIR) WEB site (http://pair.uspto.gov).

Any questions regarding the Patent Term Extension or Adjustment determination should be directed to the Office of Patent Legal Administration at (571)-272-7702. Questions relating to issue and publication fee payments should be directed to the Customer Service Center of the Office of Patent Publication at 1-(888)-786-0101 or (571)-272-4200.

Privacy Act Statement

The Privacy Act of 1974 (P.L. 93-579) requires that you be given certain information in connection with your submission of the attached form related to a patent application or patent. Accordingly, pursuant to the requirements of the Act, please be advised that: (1) the general authority for the collection of this information is 35 U.S.C. 2(b)(2); (2) furnishing of the information solicited is voluntary; and (3) the principal purpose for which the information is used by the U.S. Patent and Trademark Office is to process and/or examine your submission related to a patent application or patent. If you do not furnish the requested information, the U.S. Patent and Trademark Office may not be able to process and/or examine your submission, which may result in termination of proceedings or abandonment of the application or expiration of the patent.

The information provided by you in this form will be subject to the following routine uses:

1. The information on this form will be treated confidentially to the extent allowed under the Freedom of Information Act (5 U.S.C. 552) and the Privacy Act (5 U.S.C 552a). Records from this system of records may be disclosed to the Department of Justice to determine whether disclosure of these records is required by the Freedom of Information Act.
2. A record from this system of records may be disclosed, as a routine use, in the course of presenting evidence to a court, magistrate, or administrative tribunal, including disclosures to opposing counsel in the course of settlement negotiations.
3. A record in this system of records may be disclosed, as a routine use, to a Member of Congress submitting a request involving an individual, to whom the record pertains, when the individual has requested assistance from the Member with respect to the subject matter of the record.
4. A record in this system of records may be disclosed, as a routine use, to a contractor of the Agency having need for the information in order to perform a contract. Recipients of information shall be required to comply with the requirements of the Privacy Act of 1974, as amended, pursuant to 5 U.S.C. 552a(m).
5. A record related to an International Application filed under the Patent Cooperation Treaty in this system of records may be disclosed, as a routine use, to the International Bureau of the World Intellectual Property Organization, pursuant to the Patent Cooperation Treaty.
6. A record in this system of records may be disclosed, as a routine use, to another federal agency for purposes of National Security review (35 U.S.C. 181) and for review pursuant to the Atomic Energy Act (42 U.S.C. 218(c)).
7. A record from this system of records may be disclosed, as a routine use, to the Administrator, General Services, or his/her designee, during an inspection of records conducted by GSA as part of that agency's responsibility to recommend improvements in records management practices and programs, under authority of 44 U.S.C. 2904 and 2906. Such disclosure shall be made in accordance with the GSA regulations governing inspection of records for this purpose, and any other relevant (i.e., GSA or Commerce) directive. Such disclosure shall not be used to make determinations about individuals.
8. A record from this system of records may be disclosed, as a routine use, to the public after either publication of the application pursuant to 35 U.S.C. 122(b) or issuance of a patent pursuant to 35 U.S.C. 151. Further, a record may be disclosed, subject to the limitations of 37 CFR 1.14, as a routine use, to the public if the record was filed in an application which became abandoned or in which the proceedings were terminated and which application is referenced by either a published application, an application open to public inspection or an issued patent.
9. A record from this system of records may be disclosed, as a routine use, to a Federal, State, or local law enforcement agency, if the USPTO becomes aware of a violation or potential violation of law or regulation.

Notice of Allowability	Application No.	Applicant(s)	
	10/560,262	ZATLOUKAL ET AL.	
	Examiner	Art Unit	
	DANIEL WALSH	2887	

-- The MAILING DATE of this communication appears on the cover sheet with the correspondence address--

All claims being allowable, PROSECUTION ON THE MERITS IS (OR REMAINS) CLOSED in this application. If not included herewith (or previously mailed), a Notice of Allowance (PTOL-85) or other appropriate communication will be mailed in due course. **THIS NOTICE OF ALLOWABILITY IS NOT A GRANT OF PATENT RIGHTS.** This application is subject to withdrawal from issue at the initiative of the Office or upon petition by the applicant. See 37 CFR 1.313 and MPEP 1308.

1. ☒ This communication is responsive to *7-14-11*.

2. ☐ An election was made by the applicant in response to a restriction requirement set forth during the interview on _____; the restriction requirement and election have been incorporated into this action.

3. ☒ The allowed claim(s) is/are *1-28 and 30-40*.

4. ☐ Acknowledgment is made of a claim for foreign priority under 35 U.S.C. § 119(a)-(d) or (f).
   a) ☐ All b) ☐ Some* c) ☐ None of the:
      1. ☐ Certified copies of the priority documents have been received.
      2. ☐ Certified copies of the priority documents have been received in Application No. _____ .
      3. ☐ Copies of the certified copies of the priority documents have been received in this national stage application from the International Bureau (PCT Rule 17.2(a)).

   * Certified copies not received: _____.

Applicant has THREE MONTHS FROM THE "MAILING DATE" of this communication to file a reply complying with the requirements noted below. Failure to timely comply will result in ABANDONMENT of this application.
THIS THREE-MONTH PERIOD IS NOT EXTENDABLE.

5. ☐ A SUBSTITUTE OATH OR DECLARATION must be submitted. Note the attached EXAMINER'S AMENDMENT or NOTICE OF INFORMAL PATENT APPLICATION (PTO-152) which gives reason(s) why the oath or declaration is deficient.

6. ☐ CORRECTED DRAWINGS (as "replacement sheets") must be submitted.
   (a) ☐ including changes required by the Notice of Draftsperson's Patent Drawing Review (PTO-948) attached
      1) ☐ hereto or 2) ☐ to Paper No./Mail Date _____.
   (b) ☐ including changes required by the attached Examiner's Amendment / Comment or in the Office action of Paper No./Mail Date _____.

   Identifying indicia such as the application number (see 37 CFR 1.84(c)) should be written on the drawings in the front (not the back) of each sheet. Replacement sheet(s) should be labeled as such in the header according to 37 CFR 1.121(d).

7. ☐ DEPOSIT OF and/or INFORMATION about the deposit of BIOLOGICAL MATERIAL must be submitted. Note the attached Examiner's comment regarding REQUIREMENT FOR THE DEPOSIT OF BIOLOGICAL MATERIAL.

Attachment(s)

1. ☒ Notice of References Cited (PTO-892)
2. ☐ Notice of Draftperson's Patent Drawing Review (PTO-948)
3. ☐ Information Disclosure Statements (PTO/SB/08), Paper No./Mail Date _____
4. ☐ Examiner's Comment Regarding Requirement for Deposit of Biological Material
5. ☐ Notice of Informal Patent Application
6. ☐ Interview Summary (PTO-413), Paper No./Mail Date _____ .
7. ☒ Examiner's Amendment/Comment
8. ☒ Examiner's Statement of Reasons for Allowance
9. ☐ Other _____.

EXAMINER'S AMENDMENT

1. An examiner's amendment to the record appears below. Should the changes and/or additions be unacceptable to applicant, an amendment may be filed as provided by 37 CFR 1.312. To ensure consideration of such an amendment, it MUST be submitted no later than the payment of the issue fee.

Authorization for this examiner's amendment was given in a telephone interview with Ryan Fox on 10-25-11.

The application has been amended as follows:

Replace claim 1 with the following:

-- A method for providing a radio frequency identification (RFID) from a switchable mobile communications device capable of RFID communication and voice call communication, the method comprising:

receiving, by the mobile communications device, from an RFID reader external to the mobile device, an instruction to transmit first RFID transponder data in a format compatible with said RFID reader;

switching a transceiver of the mobile communications device from a first state to a second state upon reception of said instruction, the transceiver configured to output voice call signals in the first state and to output RFID transponder signals in the second state; and

outputting the first data by the transceiver in the second state, the transceiver outputting the first data as an RFID transponder signal in the format compatible with said RFID reader.—

Replace claim 3 with the following:

-- The method of claim 1, wherein said first RFID transponder data comprises a selected one of a security key and an identifier.—

Replace claim 5 with the following:

--The method of claim 1, wherein said first RFID transponder data comprises an identifier, and said identifier comprises a selected one of a social security number, a driver's license number, an affinity program account number, and a credit card number.—

Replace claim 6 with the following:

-- The method of claim 1, wherein the method further comprises facilitating the user in selecting the first RFID transponder data from a plurality of RFID transponder data using the mobile communication device.—

Replace claim 7 with the following:

-- The method of claim 1, wherein the method further comprises facilitating provision of the first RFID transponder data to the mobile communication device.--

Replace claim 8 with the following:

-- The method of claim 7, wherein said facilitating of the provisioning of the RFID transponder data to the mobile communication device includes facilitating provision of at least a signaling attribute associated with the outputting of the RFID transponder data in the format compatible with said RFID reader.—

Replace claim 9 with the following:

-- The method of claim 1, wherein the method further comprises:

monitoring for proximal presence of the RFID reader by the mobile communication device; and

on detection of the RFID reader by the mobile communication device, outputting by the transceiver second RFID transponder data as a second radio frequency signal, the outputting emulating output of the second RFID transponder data by an RFID transponder of a passive type.--

Replace claim 11 with the following:

-- The method of claim 9, wherein said first RFID transponder data and second RFID transponder data are the same data.—

Replace claim13 with the following:

-- A method for providing a radio frequency identifier (RFID), from a switchable mobile communications device capable of RFID communication and voice call communication, the method comprising:

monitoring for proximal presence of a proximal RFID reader external to said mobile communication device by said mobile communication device, the mobile communication device having a transceiver configured, to output, in a first state, RFID transponder data in a format compatible with said RFID reader upon the mobile communications device determining proximal presence of one or more RFID readers, the transceiver being also configured to output, in a second state, a voice call signal for transmission at least in part over a wireless network; and

on detection of the RFID reader, outputting, by the transceiver, the RFID transponder data as a radio frequency signal, said data being output in said format employed by the RFID reader.--

Replace claim 14 with the following:

-- The method of claim 13, wherein said monitoring comprises sensing for one or more probing radio frequency signals of the one or more RFID readers by the mobile communication device.—

Replace claim18 with the following:

-- The method of claim 13, wherein the method further comprises facilitating provision of the RFID transponder data to the mobile communication device.--

Replace claim 19 with the following:

-- The method of claim 18, wherein said facilitating of the provisioning of the RFID transponder data to the mobile communication device includes facilitating provision of at least a signaling attribute associated with the outputting of the RFID transponder data in the format employed by the RFID reader.—

Replace claim 21 with the following:

-- A switchable mobile communication device capable of RFID communication and voice call communication, the mobile communication device comprising:

a transmitter configured to transmit a radio frequency signal, the transmitter comprising a first signal processing section and a second signal processing section, the first signal processing section configured to output voice call signals in a first radio frequency range and the second signal processing section configured to output RFID transponder signals in a second radio frequency range;

a storage medium to store a first data and instructions to:

monitor for proximal presence of one or more RFID readers external to the mobile communication device; and

operate the transmitter to switch between the first and second signal processing sections to selectively: (a) output first RFID transponder data as said RFID transponder signals in a format employed by a proximal RFID reader, in response to detection by the mobile communication device of the proximal RFID reader, and (b) output a voice call signal for transmission over a wireless network; and

a processor coupled to the transmitter and the storage to execute the instructions.--

Replace claim 22 with the following:

-- The device of claim 21, wherein said first RFID transponder data comprises a selected one of a security key and an identifier.—

Replace claim 23 with the following:

-- The device of claim 22, wherein said first RFID transponder data comprises a security key, and said security key comprises a door key.--

Replace claim 25 with the following:

-- The device of claim 22, wherein said first RFID transponder data comprises an identifier, and said identifier comprises a selected one of a social security number, a driver's license number, an affinity program account number, and a credit card number.—

Replace claim26 with the following:

-- The device of claim 21, wherein the instructions are further designed to facilitate the user in selecting the first RFID transponder data from a plurality of RFID transponder data, and instructing said output.--

Replace claim 27 with the following:

-- The device of claim 21, wherein the instructions are further designed to facilitate provision of the first RFID transponder data to the mobile communication device.—

Replace claim 28 with the following:

-- The device of claim 27, wherein the instructions are further designed to include with said facilitating, provisioning of at least a signaling attribute associated with the outputting of the first RFID transponder data in the form of a radio frequency signal.—

Cancel claim 29

Re claims 30 and 31, line 1 of each claim: Replace “29” in line 1 of each of claim 30 and 31, with –21--.

Replace claim 33 with the following:

-- A switchable mobile communication device capable of radio frequency identifier RFID communication and voice call communication, the mobile communication device comprising:

a transmitter configured to transmit a voice call signal in a first operational state and a RFID transponder signal in a second operational state;

a storage medium to store a first data and instructions to switch the transmitter between the first and second operational states to selectively (a) monitor for proximal presence of a proximal RFID reader, and on detection of the proximal RFID reader, output RFID transponder data as an RFID signal in a format employed by the RFID reader, and (b) transmit a voice call signal to another user of another communication device at least in part over a wireless network; and

a processor coupled to the transmitter and the storage to execute the instructions.--

Replace claim 35 with the following;

-- The device of claim 33, wherein said RFID transponder data comprises a security key.—

Replace claim 38 with the following:

-- The device of claim 33, wherein the instructions are further designed to facilitate provision of the RFID transponder data to the mobile communication device.—

Replace claim 39 with the following:

-- The device of claim 38, wherein the instructions are further designed to include with said facilitating, provisioning of at least a signaling attribute associated with the outputting of the RFID transponder data in the form of a radio frequency signal.--

Allowable Subject Matter

2. Claims 1-28 and 30-40 are allowed.

3. The following is an examiner's statement of reasons for allowance: The prior art of record fails to teach the limitations of the transmitter/transceiver configured to output/transmit voice calls in a first state and RFID transponder signals in a second state wherein the transceiver/transmitter switches states, and outputs the RFID transponder signal/data in the RFID reader compatible format.

4. The Examiner notes the art of 20040069852 20040171373 teaches voice and RFID functionality, but the RFID functionality is of an RFID reader, and not a tag/transponder, and therefore does not teach the outputting of transponder tag data/signal in a format accepted/compatible with an RFID reader (or as recited in the claims), since the references teach RFID reader functionality and therefore not RFID tag/transponder functionality via outputting of RFID tag data/signals and also does not support the detection/monitoring/sensing for RFID readers and outputting the data in response thereto. Additionally, US 20070030124 teach switching an antenna between an RFID interrogator/reader and phone by sharing an antenna.

Any comments considered necessary by applicant must be submitted no later than the payment of the issue fee and, to avoid processing delays, should preferably accompany the issue fee. Such submissions should be clearly labeled "Comments on Statement of Reasons for Allowance."

Conclusion

Any inquiry concerning this communication or earlier communications from the examiner should be directed to DANIEL WALSH whose telephone number is (571)272-2409. The examiner can normally be reached on M-F 9am-7pm.

If attempts to reach the examiner by telephone are unsuccessful, the examiner's supervisor, Steven Paik can be reached on 571-272-2404. The fax phone number for the organization where this application or proceeding is assigned is 571-273-8300.

Information regarding the status of an application may be obtained from the Patent Application Information Retrieval (PAIR) system. Status information for published applications may be obtained from either Private PAIR or Public PAIR. Status information for unpublished applications is available through Private PAIR only. For more information about the PAIR system, see http://pair-direct.uspto.gov. Should you have questions on access to the Private PAIR system, contact the Electronic Business Center (EBC) at 866-217-9197 (toll-free). If you would like assistance from a USPTO Customer Service Representative or access to the automated information system, call 800-786-9199 (IN USA OR CANADA) or 571-272-1000.

/DANIEL WALSH/
Primary Examiner
Art Unit 2887

Notice of References Cited	Application/Control No. 10/560,262	Applicant(s)/Patent Under Reexamination ZATLOUKAL ET AL.	
	Examiner DANIEL WALSH	Art Unit 2887	Page 1 of 2

U.S. PATENT DOCUMENTS

*		Document Number Country Code-Number-Kind Code	Date MM-YYYY	Name	Classification
*	A	US-6,167,128 A	12-2000	Fuller et al.	379/211.01
*	B	US-6,314,281 B1	11-2001	Chao et al.	455/404.2
*	C	US-6,421,347 B1	07-2002	Borgstahl et al.	370/401
*	D	US-6,434,395 B1	08-2002	Lubin et al.	455/466
*	E	US-2002/0160775 A1	10-2002	Pecen et al.	455/434
*	F	US-2003/0069048 A1	04-2003	Liu et al.	455/569
*	G	US-2004/0069852 A1	04-2004	Seppinen et al.	235/451
*	H	US-2004/0077352 A1	04-2004	Mahany, Ronald L.	455/448
*	I	US-2004/0171373 A1	09-2004	Suda et al.	455/415
*	J	US-2004/0248616 A1	12-2004	Pecen et al.	455/552.1
*	K	US-2005/0127156 A1	06-2005	Yoo et al.	235/375
*	L	US-2006/0003772 A1	01-2006	Semper, William J.	455/452.1
*	M	US-2007/0030124 A1	02-2007	LEE, Won-Jun	340/010.1

FOREIGN PATENT DOCUMENTS

*		Document Number Country Code-Number-Kind Code	Date MM-YYYY	Country	Name	Classification
	N					
	O					
	P					
	Q					
	R					
	S					
	T					

NON-PATENT DOCUMENTS

*		Include as applicable: Author, Title Date, Publisher, Edition or Volume, Pertinent Pages)
	U	
	V	
	W	
	X	

*A copy of this reference is not being furnished with this Office action. (See MPEP § 707.05(a).)
Dates in MM-YYYY format are publication dates. Classifications may be US or foreign.

Notice of References Cited	Application/Control No. 10/560,262	Applicant(s)/Patent Under Reexamination ZATLOUKAL ET AL.	
	Examiner DANIEL WALSH	Art Unit 2887	Page 2 of 2

U.S. PATENT DOCUMENTS

*		Document Number Country Code-Number-Kind Code	Date MM-YYYY	Name	Classification
*	A	US-2007/0066278 A1	03-2007	Hong, Seok Jin	455/405
*	B	US-2007/0060212 A1	03-2007	Shah, Nitin J.	455/572
*	C	US-2007/0120679 A1	05-2007	Shin et al.	340/572.7
*	D	US-2007/0178935 A1	08-2007	Shim et al.	455/552.1
*	E	US-2009/0209283 A1	08-2009	Yang et al.	455/553.1
*	F	US-7,605,701 B2	10-2009	Lee, Won-Jun	340/572.1
*	G	US-2010/0158077 A1	06-2010	Mahany, Ronald L.	375/132
	H	US-			
	I	US-			
	J	US-			
	K	US-			
	L	US-			
	M	US-			

FOREIGN PATENT DOCUMENTS

*		Document Number Country Code-Number-Kind Code	Date MM-YYYY	Country	Name	Classification
	N					
	O					
	P					
	Q					
	R					
	S					
	T					

NON-PATENT DOCUMENTS

*		Include as applicable: Author, Title Date, Publisher, Edition or Volume, Pertinent Pages)
	U	
	V	
	W	
	X	

*A copy of this reference is not being furnished with this Office action. (See MPEP § 707.05(a).)
Dates in MM-YYYY format are publication dates. Classifications may be US or foreign.

Search Notes	Application/Control No.	Applicant(s)/Patent Under Reexamination
	10560262	ZATLOUKAL ET AL.
	Examiner	**Art Unit**
	KUMIKO C KOYAMA	2887

SEARCHED

Class	Subclass	Date	Examiner
235	375, 380, 492	02/28/2009	KCK
455	557	02/28/2009	KCK
340	505, 539.1, 539.11	02/28/2009	KCK
Updated	Search	08/15/2009	KCK
Updated	Search	12/20/2009	KCK
340	10.1,10.3,10.5,572.1	6-11-10	dw
235	379 380 492 375	10-25-11	dw
235	451	10-25-11	dw
340	539.1 439.11	10-25-11	dw
340	10.1 572.1 5.6-5.62	10-25-11	dw
455	88 5535.1 90.1 90.2 90.3	10-25-11	dw

SEARCH NOTES

Search Notes	Date	Examiner
East Search	02/28/2009	KCK
Updated Search	08/15/2009	KCK
Updated East Search	12/20/2009	KCK
class 340 455 keyword search	6-11-10	dw
consulted L. West class 455	6-11-10	dw
consulted E. Halloway class 340	6-10-10	dw
updated search	3-10-11	dw
class 235 340 455 keyword search	3-10-11	dw
consulted L. West class 455	3-10-11	dw
class 235 340 455 keyword search	10-25-11	dw
consulted L. West class 455	10-25-11	dw

INTERFERENCE SEARCH

Class	Subclass	Date	Examiner
same as	above	10-25-11	dw

Issue Classification	Application/Control No.	Applicant(s)/Patent Under Reexamination
	10560262	ZATLOUKAL ET AL.
	Examiner	**Art Unit**
	DANIEL WALSH	2887

ORIGINAL		INTERNATIONAL CLASSIFICATION													
CLASS	SUBCLASS	CLAIMED					NON-CLAIMED				
235	380	G	0	6	K	5 / 00 (2006.01.01)					
CROSS REFERENCE(S)		G	0	6	F	17 / 00 (2006.01.01)					
		H	0	4	B	1 / 38 (2006.01.01)					
CLASS	SUBCLASS (ONE SUBCLASS PER BLOCK)	H	0	4	Q	5 / 22 (2006.01.01)					
235	492 375	G	0	8	B	1 / 08 (2006.01.01)					
455	73	G	0	5	B	19 / 00 (2006.01.01)					
340	10.1 539.11 5.6 5.62										

☐ Claims renumbered in the same order as presented by applicant ☐ CPA ☐ T.D. ☐ R.1.47

Final	Original	Final	Original	Final	Original	Final	Original	Final	Original	Final	Original	Final	Original	Final	Original
1	1	17	17	32	33										
2	2	18	18	33	34										
3	3	19	19	34	35										
4	4	20	20	35	36										
5	5	21	21	36	37										
6	6	22	22	37	38										
7	7	23	23	38	39										
8	8	24	24	39	40										
9	9	25	25												
10	10	26	26												
11	11	27	27												
12	12	28	28												
13	13		29												
14	14	29	30												
15	15	30	31												
16	16	31	32												

NONE (Assistant Examiner)	(Date)	**Total Claims Allowed:** 39	
/DANIEL WALSH/ Primary Examiner.Art Unit 2887 (Primary Examiner)	10/25/2011 (Date)	O.G. Print Claim(s) 1	O.G. Print Figure 1

Index of Claims	Application/Control No.	Applicant(s)/Patent Under Reexamination
	10560262	ZATLOUKAL ET AL.
	Examiner	**Art Unit**
	WALSH DANIEL	2887

✓	Rejected	-	Cancelled	N	Non-Elected	A	Appeal
=	Allowed	÷	Restricted	I	Interference	O	Objected

☐ Claims renumbered in the same order as presented by applicant ☐ CPA ☐ T.D. ☐ R.1.47

CLAIM		DATE								
Final	Original	02/28/2009	08/15/2009	12/20/2009	06/11/2010	03/14/2011	10/25/2011			
1	1	✓	✓	✓	✓	✓	=			
2	2	✓	✓	✓	✓	✓	=			
3	3	✓	✓	✓	✓	✓	=			
4	4	✓	✓	✓	✓	O	=			
5	5	✓	✓	✓	✓	O	=			
6	6	✓	✓	✓	✓	✓	=			
7	7	✓	✓	✓	✓	✓	=			
8	8	✓	✓	✓	✓	✓	=			
9	9	✓	✓	✓	✓	✓	=			
10	10	✓	✓	✓	✓	✓	=			
11	11	✓	✓	✓	✓	✓	=			
12	12	✓	✓	✓	✓	O	=			
13	13	✓	✓	✓	✓	✓	=			
14	14	✓	✓	✓	✓	✓	=			
15	15	✓	✓	✓	✓	✓	=			
16	16	✓	✓	✓	✓	O	=			
17	17	✓	✓	✓	✓	O	=			
18	18	✓	✓	✓	✓	✓	=			
19	19	✓	✓	✓	✓	✓	=			
20	20	✓	✓	✓	✓	O	=			
21	21	✓	✓	✓	✓	✓	=			
22	22	✓	✓	✓	✓	✓	=			
23	23	✓	✓	✓	✓	O	=			
24	24	✓	✓	✓	✓	O	=			
25	25	✓	✓	✓	✓	O	=			
26	26	✓	✓	✓	✓	✓	=			
27	27	✓	✓	✓	✓	✓	=			
	28	✓	✓	✓	✓	✓	=			
28	29	✓	✓	✓	✓	✓	-			
29	30	✓	✓	✓	✓	✓	=			
30	31	✓	✓	✓	✓	✓	=			
31	32	✓	✓	✓	✓	✓	=			
32	33	✓	✓	✓	✓	✓	=			
33	34	✓	✓	✓	✓	✓	=			
34	35	✓	✓	✓	✓	✓	=			
35	36	✓	✓	✓	✓	O	=			

Index of Claims	Application/Control No.	Applicant(s)/Patent Under Reexamination
	10560262	ZATLOUKAL ET AL.
	Examiner	**Art Unit**
	WALSH DANIEL	2887

✓	Rejected	-	Cancelled	N	Non-Elected	A	Appeal
=	Allowed	÷	Restricted	I	Interference	O	Objected

☐ Claims renumbered in the same order as presented by applicant ☐ CPA ☐ T.D. ☐ R.1.47

CLAIM		DATE								
Final	Original	02/28/2009	08/15/2009	12/20/2009	06/11/2010	03/14/2011	10/25/2011			
36	37	✓	✓	✓	✓	O	=			
37	38	✓	✓	✓	✓	✓	=			
38	39	✓	✓	✓	✓	✓	=			
39	40	✓	✓	✓	✓	O	=			
	41	-	-	-						
	42	-	-	-						
	43	-	-	-						
	44	-	-	-						
	45	-	-	-						
	46	-	-	-						
	47	-	-	-						
	48	-	-	-						
	49	-	-	-						
	50	-	-	-						
	51	-	-	-						
	52	-	-	-						
	53	-	-	-						
	54	-	-	-						
	55	-	-	-						
	56	-	-	-						
	57	-	-	-						
	58	-	-	-						
	59	-	-	-						
	60	-	-	-						

EAST Search History

EAST Search History (Prior Art)

Ref #	Hits	Search Query	DBs	Default Operator	Plurals	Time Stamp
S1	1	"20040087273".pn.	US-PGPUB; USPAT; EPO; JPO	OR	OFF	2011/10/20 10:55
S2	1	("6771981").pn.	US-PGPUB; USPAT; EPO; JPO	OR	OFF	2011/10/20 11:20
S3	1	"20020123325".pn.	US-PGPUB; USPAT; EPO; JPO	OR	OFF	2011/10/20 11:29
S4	13	transceiver with (switch$4 or chang$4) with (mode or state) same (RFID) same (mobile or cellular or telephone)	US-PGPUB; USPAT; EPO; JPO	OR	ON	2011/10/20 11:36
S5	1	"6421347".pn.	US-PGPUB; USPAT; EPO; JPO	OR	ON	2011/10/20 11:41
S6	19	("20020067267" | "20030219035" | "20040127251" | "20050127156" | "20050280545" | "20060079180" | "4979170" | "6067443" | "6292671" | "6782251" | "6816711" | "6937878" | "7020497" | "7113095" | "7167710" | "7215976").PN. OR ("7605701").URPN.	US-PGPUB; USPAT; USOCR	OR	OFF	2011/10/20 11:42
S7	2	(common or shar$3) with transceiver same (switch$4 or chang$4) with (mode or state) same (RFID or transponder or tag) same (mobile or cellular or telephone) same (voice or call)	US-PGPUB; USPAT; EPO; JPO	OR	ON	2011/10/20 11:43
S8	6224	340/572.1.ccls.	US-PGPUB; USPAT; EPO; JPO	OR	ON	2011/10/20 11:45
S9	4347	340/10.1.ccls.	US-PGPUB; USPAT; EPO; JPO	OR	OFF	2011/10/20 12:06
S10	1801	340/5.6-5.62.ccls.	US-PGPUB; USPAT;	OR	OFF	2011/10/20 12:06

			EPO; JPO			
S11	2923	455/557.ccls.	US-PGPUB; USPAT; EPO; JPO	OR	OFF	2011/10/20 12:07
S12	3259	455/88,553.1.,90.1,90.2,90.3.ccls.	US-PGPUB; USPAT; EPO; JPO	OR	OFF	2011/10/20 12:08
S13	4169	340/539.1,539.11.ccls.	US-PGPUB; USPAT; EPO; JPO	OR	ON	2011/10/20 12:09
S14	20364	S8 S9 S10 S11 S12 S13	US-PGPUB; USPAT; EPO; JPO	OR	ON	2011/10/20 12:09
S15	5	S14 and (chang$4 or switch$4) with (mode or state) same (phone or telephone) same (RFID or transponder) same (transceiver or transmitter)	US-PGPUB; USPAT; EPO; JPO	OR	ON	2011/10/20 12:10
S16	128	(chang$4 or switch$4) with (mode or state) same (phone or telephone or mobile or portable or handheld or terminal) same (RFID or transponder or "radio frequency" or tag) same (transceiver or transmitter) same (voice or call)	US-PGPUB; USPAT; EPO; JPO	OR	ON	2011/10/20 13:18
S17	21754	235/379,380,492,375.ccls.	US-PGPUB; USPAT; EPO; JPO	OR	ON	2011/10/20 14:24
S18	276	("235"/$.ccls. "340"/$.ccls. "455"/$.ccls.) and (mobile or portable or handheld or terminal or cellular or phone) same (rfid or transponder or tag) same (transceiver or transmit$4) same (mode or state) with (switch$4 or chang$4 or alter$5)	US-PGPUB; USPAT; EPO; JPO	OR	ON	2011/10/20 14:25
S19	278	("235"/$.ccls. "340"/$.ccls. "455"/$.ccls.) and (mobile or portable or handheld or terminal or cellular or phone) same (rfid or transponder or tag) same (transceiver or transmit$4) same (mode or state) with (switch$5 or chang$4 or alter$5)	US-PGPUB; USPAT; EPO; JPO	OR	ON	2011/10/20 14:25
S20	1040	235/451.ccls.	US-PGPUB; USPAT; EPO; JPO	OR	ON	2011/10/20 14:41

10/25/2011 5:22:44 PM
C:\Users\dwalsh1\Documents\EAST\Workspaces\10560262_3.wsp

IN THE UNITED STATES PATENT AND TRADEMARK OFFICE

In Application of:

Zatloukal, et al.

Application No.: 10/560,262

Filed: December 9, 2005

For: EMULATED RADIO FREQUENCY IDENTIFICATION

Examiner: Walsh, Daniel I.

Group Art Unit: 2887

Confirmation No.: 3358

Mail Stop Appeal Brief-Patents
Commissioner for Patents
PO Box 1450
Alexandria, VA 22313-1450

APPELLANT'S APPEAL BRIEF

TO THE HONORABLE COMMISSIONER FOR PATENTS:

This is Appellant's Brief submitted in support of the Notice of Appeal to the Board of Patent Appeals and Interferences filed on May 16, 2011, appealing the decision of the Examiner in the Office Action mailed March 31, 2011 ("the Action"), in which claims 1-3, 6-11, 13-15, 18, 19, 21, 22, 26-35, 38, and 39 of the subject patent application were again rejected and claims 4, 5, 12, 16, 17, 20, 23-25, 36, 37, and 40 were objected to. Appellant respectfully requests consideration of this Appeal by the Board of Patent Appeals and Interferences for allowance of the subject patent application.

TABLE OF CONTENTS

I. REAL PARTY IN INTEREST 3

II. RELATED APPEALS AND INTERFERENCES 4

III. STATUS OF THE CLAIMS 5

IV. STATUS OF AMENDMENTS 6

V. SUMMARY OF THE CLAIMED SUBJECT MATTER 7

VI. GROUNDS OF REJECTION TO BE REVIEWED ON APPEAL- 10

VII. ARGUMENT 11

A. Claims 1-3, 6-8, 13-15, 18-19, 21-22, 26-28, 32-35, and 38-39 are Patentable under 35 U.S.C. § 103(a) over Cooper 11

1. Rejection of Independent Claim 1 11

a. Cooper's Teaching of Separate Bluetooth and RFID Transmitters Does Not Teach or Suggest a "Transceiver Configured to Output Voice Call Signals . . . and to Output RFID Signals" as Recited in Claim 1 11

b. Neither Cooper's Teaching of Secure and Non-Secure Modes nor Its Teaching of Transmitting Bluetooth and RFID Teaches or Suggests "Switching a Transceiver . . . from a First State to a Second State," as Recited in Claim 1 13

c. Independent Claim 1 Is Patentable over Cooper 14

2. Rejection of Independent Claim 13 15

3. Rejection of Independent Claim 13 15

4. Rejection of Dependent Claims 2, 3, 6-8, 14, 15, 18-19, 22, 26-28, 32-35, and 38-39 16

B. Claims 9-11 and 29-31 are Patentable under 35 U.S.C. § 103(a) over Cooper in view of Palmer 16

VIII. CONCLUSION18

I. REAL PARTY IN INTEREST

The real party in interest in the above-identified application is Varia Holdings, LLC of Brooklyn, New York.

II. RELATED APPEALS AND INTERFERENCES

The Appellant's undersigned attorney and the assignee identified above are not aware of other appeals or interferences that would directly affect, or be directly affected by, or have a bearing on the Board's decision in the subject Appeal.

III. STATUS OF THE CLAIMS

Claims 1-40 are pending. Claims 1-3, 6-11, 13-15, 18, 19, 21, 22, 26-35, 38, and 39 were rejected in the Action and have been twice rejected. Claims 4, 5, 12, 16, 17, 20, 23-25, 36, 37, and 40 were objected to in the Action. The rejection of claims 1-3, 6-11, 13-15, 18, 19, 21, 22, 26-35, 38, and 39 and objection to claims 4, 5, 12, 16, 17, 20, 23-25, 36, 37, and 40 is being appealed herein.

Claims 41-60 have been previously cancelled.

IV. STATUS OF AMENDMENTS

The last amendment was filed as an after-final amendment on September 21, 2010 (hereinafter "the After-Final Amendment"). The after-final amendment submitted claims 1-40 for examination and made minor typographical amendments to claim 1. An Advisory Action mailed October 21, 2010 refused entry of the amendments. An Appeal Brief was filed on December 21, 2010 pursuant to a Notice of Appeal appealing rejection of claims 1-40 (hereinafter "the previous Appeal Brief"). The Appeal Brief argued patentability of the unamended version of claim 1. No other amendments were submitted.

The instant Action, re-opened prosecution after the filing of the previous Appeal Brief and did not discuss the previously-filed amendments. It is believed that the amendments were not entered and are currently outstanding.

A copy of the pending claims involved in the appeal as they appear without entry of the amendment is provided in the Claims Appendix, attached hereto.

V. SUMMARY OF THE CLAIMED SUBJECT MATTER

The following discusses independent claims 1, 13, 21, and 33. According to 37 CFR 41.67(c)(1)(v), a concise explanation of the subject matter in the independent claims has been set forth below with reference to the specification by page and line numbers, and to the drawings, if any, by reference characters. Accordingly, the following shows claims 1, 13, 21, and 33 together with the required reference information in brackets [ ] and *italicized*. Of course, the reference numbers and other bracketed information are illustrative only and are not intended to limit the claims only to the exact embodiments shown and described in the specification and figures of the present application.

1. A method for providing a radio frequency identification (RFID) comprising:

receiving, by a mobile communications device, an instruction to transmit a first data to a RFID reader [*pg. 6, lines 3-20; pg. 14, lines 24-27; pg. 12, line 30 to pg. 13, line 4; pg. 14, lines 13-15 and 24-27; Fig. 1 mobile communication HW/SW elements 104, RFID Emulation HW/SW elements 106, RFID 110, and RFID reader 120; Fig. 2, block 203; Fig. 3, support logic 322; Fig. 6b, list 614 and screen 612; Fig. 7, blocks 704 and 706*];

switching a transceiver of the mobile communications device from a first state to a second state, the transceiver configured to output voice call signals in the first state and to output RFID signals in the second state [*pg. 6, lines 3-20; pg. 9, lines 13-14 and 25-27; pg. 11, lines 19-28; pg. 12, lines 1-15; Fig. 3, transceiver 308 and processor 302; Fig. 4, switch 404, Joint RF TX/RX 402, high frequency signal processing 410, and low frequency signal processing 408*]; and

outputting the first data by the transceiver in the second state, the transceiver outputting the first data as a radio frequency signal in a format employed by the RFID reader [*pg. 6, lines 9-28; pg. 7, lines 16-21; pg. 8, lines 4-17; pg. 11, lines 19-24; pg. 12, lines 1-3 and 12-26; pg. 13, lines 20-30; pg. 14, lines 3-5 and 24-28; Fig. 1, mobile communication HW/SW elements 104, RFID Emulation HW/SW elements 106, RFID 110, and RFID reader 120; Fig. 2, block 204; Fig. 3, transceiver 308 and processor 302; Fig. 4, switch 404, Joint RF TX/RX 402, and low frequency signal processing 408; Fig. 7, block 710*].

13. A method for providing a radio frequency identifier (RFID), comprising:

monitoring for proximal presence of a RFID reader by a mobile communication device [*pg. 8, lines 18-28; pg. 13, line 31 to pg. 14, line 12; Fig. 1, mobile communication HW/SW elements 104, RFID Emulation HW/SW elements 106, RFID 110, and RFID reader 120; Fig. 2, block 205*], the mobile communication device having a transceiver configured to output a RFID signal to the RFID reader, the transceiver being also configured to output a voice call signal for transmission at least in part over a wireless network [*pg. 6, lines 3-20; pg. 7, lines 8-15; pg. 9, lines 13-14 and 25-27; pg. 11, lines 19-28; pg. 12, lines 1-15; Fig. 3, transceiver 308 and processor 302; Fig. 4, switch 404, Joint RF TX/RX 402, high frequency signal processing 410, and low frequency signal processing 408*]; and

on detection of the RFID reader, outputting by the transceiver a data as a radio frequency signal in a format employed by the RFID reader [*pg. 6, lines 9-28; pg. 7, lines 16-21; pg. 8, lines 4-13 and 20-28; pg. 11, lines 19-24; pg. 12, lines 1-3 and 12-26; pg. 13, line 20 to pg. 14, line 5 and 24-28; Fig. 1, mobile communication HW/SW elements 104, RFID Emulation HW/SW elements 106, RFID 110, and RFID reader 120; Fig. 2, block 206; Fig. 3, transceiver 308 and processor 302; Fig. 4, switch 404, Joint RF TX/RX 402, and low frequency signal processing 408*].

21. A mobile communication device comprising:

a transmitter configured to transmit a radio frequency signal, the transmitter comprising a first signal processing section and a second signal processing section, the first signal processing section configured to output voice call signals in a first radio frequency range and the second signal processing section configured to output RFID signals in a second radio frequency range [*pg. 6, lines 3-20; pg. 9, lines 13-14 and 25-27; pg. 11, lines 19-28; pg. 12, lines 1-16; Fig. 1, mobile communication HW/SW elements 104, RFID Emulation HW/SW elements 106, RFID 110; Fig. 3, transceiver 308 and processor 302; Fig. 4, switch 404, Joint RF TX/RX 402, high frequency signal processing 410, and low frequency signal processing 408*];

a storage medium to store a first data and instructions to operate the transmitter [*pg. 8, lines 14-17; pg. 12, lines 30-32; pg. 9, lines 1-12; Fig. 3, memory 304 with operating logic 320 and RFID feature 322*], the transmitter being operated to switch between the first and second signal processing sections to selectively (a) output a first data as a RFID signal in a format

employed by a RFID reader, in response to a user instruction, and (b) output a voice call signal for transmission over a wireless network [*pg. 6, lines 3-20; pg. 9, lines 13-14 and 25-27; pg. 11, lines 19-28; pg. 12, lines 1-15; Fig. 3, transceiver 308 and processor 302; Fig. 4, switch 404, Joint RF TX/RX 402, high frequency signal processing 410, and low frequency signal processing 408*]; and

a processor coupled to the transmitter and the storage to execute the instructions [*pg. 9, lines 1-5, 13-19, and 25-27; Fig. 3, processor 302; see also Fig. 4, arrows to/from processor*].

33. (Previously Presented) A mobile communication device comprising:

a transmitter configured to transmit a voice call signal in a first operational state and a RFID signal in a second operational state [*pg. 6, lines 3-20; pg. 9, lines 13-14 and 25-27; pg. 11, lines 19-28; pg. 12, lines 1-15; Fig. 3, transceiver 308 and processor 302; Fig. 4, switch 404, Joint RF TX/RX 402, high frequency signal processing 410, and low frequency signal processing 408*];

a storage medium to store a first data and instructions to switch the transmitter between the first and second operational states to selectively (a) monitor for proximal presence of a radio frequency identifier (RFID) reader [*pg. 8, lines 14-28; pg. 12, lines 30-32; pg. 9, lines 1-12; pg. 12, lines 30-32; Fig. 2, block 205; Fig. 3, memory 304 with operating logic 320 and RFID feature 322; Fig. 4, switch 404, Joint RF TX/RX 402, high frequency signal processing 410, and low frequency signal processing 408*], and on detection of a RFID reader, output a data as a RFID signal in a format employed by the RFID reader [*pg. 6, lines 9-28; pg. 7, lines 16-21; pg. 8, lines 4-13 and 20-28; pg. 11, lines 19-24; pg. 12, lines 1-3 and 12-26; pg. 13, line 20 to pg. 14, line 5 and 24-28; Fig. 1, mobile communication HW/SW elements 104, RFID Emulation HW/SW elements 106, RFID 110, and RFID reader 120; Fig. 2, block 206; Fig. 3, transceiver 308 and processor 302; Fig. 4, switch 404, Joint RF TX/RX 402, and low frequency signal processing 408*], and (b) transmit a voice call signal to another user of another communication device at least in part over a wireless network [*pg. 6, lines 3-20 pg. 7, lines 8-15; pg. 12, lines 1-11; Fig. 4, , switch 404, Joint RF TX/RX 402, and high frequency signal processing 410*; and

a processor coupled to the transmitter and the storage to execute the instructions [*pg. 9, lines 1-5, 13-19, and 25-27; Fig. 3, processor 302; see also Fig. 4, arrows to/from processor*].

.

VI. GROUNDS OF REJECTION TO BE REVIEWED ON APPEAL-

Whether claims 1-3, 6-8, 13-15, 18-19, 21-22, 26-28, 32-35, and 38-39 are unpatentable under 35 U.S.C. § 103(a) over U.S. Patent Application Publication No. 20002/0123325 to Cooper (hereinafter "Cooper").

Whether claims 9-11 and 29-31 are unpatentable under 35 U.S.C. § 103(a) over Cooper in view of U.S. Patent No. 5,530,702 to Palmer et al. (hereinafter "Palmer").

VII. ARGUMENT

A. Claims 1-3, 6-8, 13-15, 18-19, 21-22, 26-28, 32-35, and 38-39 are Patentable under 35 U.S.C. § 103(a) over Cooper

As indicated above, and previously in the record, claims 1-3, 6-8, 13-15, 18-19, 21-22, 26-28, 32-35, and 38-39 were rejected in the Action under 35 U.S.C. § 103(a) over Cooper. Claims 1, 13, and 21 are independent.

In order to make a *prima facie* case of obviousness, all claim limitations must be considered. [See, M.P.E.P. § 2143.03] However, Cooper fails to teach or suggest each and every recitation of the claims. Therefore, it is respectfully submitted that the appealed Action failed to make a *prima facie* case of obviousness and the rejection is therefore improper.

1. Rejection of Independent Claim 1

a. Cooper's Teaching of Separate Bluetooth and RFID Transmitters Does Not Teach or Suggest a "Transceiver Configured to Output Voice Call Signals . . . and to Output RFID Signals" as Recited in Claim 1

Claim 1 recites, in part:

> switching a transceiver of the mobile communications device from a first state to a second state, *the transceiver configured to output voice call signals in the first state and to output RFID signals in the second state* . . . .

In its rejection, the Action argued that the above-quoted language was taught at paragraphs 0025 and 0032 of Cooper. [Action at page 3.] Appellant respectfully disagrees that Cooper teaches or suggests this language of claim 1.

In the first cited passage, Cooper teaches using a Bluetooth-equipped headset to transmit voice data to a telephone terminal:

> For convenience, voice quality, security (to prevent audible eavesdropping of the other side of the conversation), and/or decorum, each user may choose to employ a Bluetooth®-equipped headset in lieu of placing the telephone terminal in speakerphone mode. According to the present invention, both headsets and the telephone terminal would initially be in non-secure mode, and capable only of non-secure communications. *To engage in pairing and establish a secure piconet*

> *according to the Bluetooth® protocol, the devices would need to be placed in secure mode by bringing them into close physical proximity.*

[Cooper, at paragraph 0025; emphasis added.] By contrast, paragraph 0032 teaches the use of RFID tags in a Bluetooth device to help establish the "secure mode" between headsets:

> One example of a well-developed technology suited for such application is the field of radio frequency identification (RFID). . . . When one or more RFID tags come into the operating range of an RFID interrogator, they transmit data (typically, a unique identification code) to the interrogator. [A]n RFID interrogator may be incorporated into the relatively complex telephone terminal, *with the relatively simple headsets equipped with corresponding RFID tag circuitry.* . . . The RFID interrogator may generate an RF sine wave that optionally provides power to the RFID tags, a synchronized clock source to the RFID tags, and functions as a carrier for returned data from RFID tags. *Each RFID tag in a Bluetooth® device may contain a coil antenna. . . . Once the RFID tag has received sufficient energy from its coil antenna or battery to operate correctly, it divides down the RF carrier signal and begins clocking its data to an output transistor connected across the coil antenna.* . . . In this manner, commonly referred to as "backscatter modulation," each slave Bluetooth® device may communicate its Bluetooth® security code or other data to the master Bluetooth® device.

[Cooper, at paragraph 0032; emphasis added.] Appellant notes initially that Cooper at no point teaches or suggests that its headset utilizes the same hardware to transmit both Bluetooth and RFID data. As such, Cooper cannot teach or suggest a "transceiver configured to output voice call signals in the first state and to output RFID signals in the second state" as recited in claim 1. Indeed, at paragraph 0032, Cooper clearly describes that "RFID tag circuitry" can be *added* to a headset to allow the headset to communicate an RFID. This means that Cooper teaches the benefit of adding additional circuitry to achieve transmission of both voice data and RFID data. As such, Cooper clearly *teaches away* from the recited "transceiver configured to output voice call signals in the first state and to output RFID signals in the second state."

In an attempt to address this clear distinction between the claim recitations and Cooper, however, the Action argued for an expansive and non-traditional interpretation of the "transceiver" recitation of claim 1:

> The Examiner has interpreted the circuitry of the mobile device, such as that responsible for communications, as the transceiver portion which is able to switch from a first and second state (non secure mode (voice mode) and a mode wherein RFID is communicated for authentication).

[Action, at page 3.] Thus, by the Action's argument, the headset in Cooper would read on a "transceiver" simply by virtue of having *two separate transmitters housed inside the same device.* Appellant respectfully argues that this is not a reasonable interpretation of the claim language.

A claim term must be given its "plain meaning," that is, the "ordinary and customary meaning given to the term by those of ordinary skill in the art." [MPEP 2111.01] The term "transceiver," however, is well understood by those of ordinary skill in the art. One of ordinary skill in the art would not reasonably interpret a "transceiver" so broadly as to incorporate an entire mobile device's circuitry, and in particular to be read on by two separate transmitters, as Cooper teaches. Furthermore, Appellant respectfully submits that nothing in the Specification nor in the prosecution record supports such an unreasonably broad interpretation. As such, it is respectfully submitted that the Action's interpretation is in error and that Cooper does not teach or suggest a "transceiver configured to output voice call signals in the first state and to output RFID signals in the second state" as recited in claim 1.

b. Neither Cooper's Teaching of Secure and Non-Secure Modes nor Its Teaching of Transmitting Bluetooth and RFID Teaches or Suggests "Switching a Transceiver . . . from a First State to a Second State," as Recited in Claim 1

As discussed above, claim 1 recites, in part:

> *switching a transceiver of the mobile communications device from a first state to a second state, the transceiver configured to output voice call signals in the first state and to output RFID signals in the second state . . . .*

In its rejection, the Action argued that the above-quoted language was taught at Figure 2 of Cooper, and in particular by Cooper's teaching of a secure state and a non-secure state:

> Cooper teaches switching a transceiver of the mobile communications device (headset) from a first state (operating in non-secure mode/voice mode) to a second state (secure mode) (FIG. 2). Cooper teaches the transceiver is configured to output voice call signals in the first state (non-secure mode), and that in a second state RFID is output for authentication. For purposes of Examination, the Examiner has interpreted the first state was a voice state and the second state as when RFID is outputted. Alternatively, the Bluetooth could be the first state (secure connection and the second state could be a subsequent RFID communication for a subsequent (secure communication attempt).

[Action at pages 3 and 4.] Appellant respectfully disagrees that Cooper teaches or suggests this language of claim 1.

Appellant notes initially that, for at least the reasons discussed above with respect to the "transceiver" recitation of claim 1, Cooper does not teach or suggest the recited "transceiver" recitation. As such, Cooper cannot teach or suggest "switching [the] transceiver of the mobile communications device from a first state to a second state," where the transceiver is recited as discussed above.

Further, Appellant respectfully notes that, even if the term "transceiver" were to be interpreted as expansively as the Action suggested, Cooper would still not teach or suggest the "switching" language above. Cooper teaches "secure" and "non-secure" modes, as the Action argued. However, paragraph 0025 of Cooper, which is quoted above, clearly describes both of these modes as aspects of a Bluetooth connection. As such Bluetooth and voice communications may be performed in *either* mode.

Furthermore, paragraph 0032 of Cooper describes that Cooper's RFID tags are used to *facilitate* sharing of a Bluetooth security code to set up such a secure connection. However, Cooper does not teach any change in the RFID tags responsiveness based on whether or not Bluetooth communications are occurring in a secure or non-secure manner. This means RFID communications can occur in *either* mode, as well.

Since Cooper teaches that *all* types of communications can happen in *any* mode, it is respectfully submitted that Cooper cannot teach or suggest "switching a transceiver of the mobile communications device from a first state to a second state, the transceiver configured to output voice call signals in the first state and to output RFID signals in the second state," as recited in claim 1.

c. Independent Claim 1 Is Patentable over Cooper

For at least the foregoing reasons, Appellant contends that the cited passages of Cooper do not teach or suggest the above-emphasized recitations of claim 1. Appellant does not find relevant teaching elsewhere in Cooper to remedy these deficiencies.

In view of the foregoing, Appellant respectfully submits that the Action has not shown that Cooper teaches or suggests each and every element of claim 1. The Action thus failed to

make a *prima facie* case of unpatentability of claim 1 under 35 U.S.C. § 103 and the rejection was therefore improper. Appellant respectfully requests that the rejection of independent claim 1 be withdrawn and that claim 1 be allowed.

2. Rejection of Independent Claim 13

Claim 13 recites, in part:

> monitoring for proximal presence of a RFID reader by a mobile communication device, *the mobile communication device having a transceiver configured to output a RFID signal to the RFID reader, the transceiver being also configured to output a voice call signal for transmission at least in part over a wireless network*; and
>
> on detection of the RFID reader, outputting by the transceiver a data as a radio frequency signal in a format employed by the RFID reader.

[Emphasis added.] In its rejection of claim 13, the Action referred back to its rejection of claim 1, in particular to support its rejection of the "transceiver" recitation of claim 13. [Action, at page 4.] As such, Appellant respectfully submits that, for at least the reasons discussed above with respect to claim 1, the cited passages of Cooper do not teach or suggest at least the above-emphasized recitations of claim 13. Appellant does not find relevant teaching elsewhere in Cooper to remedy these deficiencies.

In view of the foregoing, Appellant respectfully submits that the Action has not shown that Cooper teaches or suggests each and every element of claim 13. The Action thus failed to make a *prima facie* case of unpatentability of claim 13 under 35 U.S.C. § 103 and the rejection was therefore improper. Appellant respectfully requests that the rejection of independent claim 13 be withdrawn and that claim 13 be allowed.

3. Rejection of Independent Claim 13

Claim 13 recites, in part:

> a transmitter configured to transmit a radio frequency signal, *the transmitter comprising a first signal processing section and a second signal processing section, the first signal processing section configured to output voice call signals in a first radio frequency range and the second signal processing section configured to output RFID signals in a second radio frequency range*;
>
> a storage medium to store a first data and instructions to operate the transmitter, *the transmitter being operated to switch between the first and second*

signal processing sections to selectively (a) output a first data as a RFID signal in a format employed by a RFID reader, in response to a user instruction, and (b) output a voice call signal for transmission over a wireless network . . . .

[Emphasis added.] In its rejection of claim 21, the Action referred to the same passages of Cooper as it used in its rejection of claim 1. [Action, at pages 5 and 6.] As such, Appellant respectfully submits that, for at least the reasons discussed above with respect to claim 1, the cited passages of Cooper do not teach or suggest at least the above-emphasized recitations of claim 21. Appellant does not find relevant teaching elsewhere in Cooper to remedy these deficiencies.

In view of the foregoing, Appellant respectfully submits that the Action has not shown that Cooper teaches or suggests each and every element of claim 21. The Action thus failed to make a *prima facie* case of unpatentability of claim 21 under 35 U.S.C. § 103 and the rejection was therefore improper. Appellant respectfully requests that the rejection of independent claim 21 be withdrawn and that claim 21 be allowed.

4. Rejection of Dependent Claims 2, 3, 6-8, 14, 15, 18-19, 22, 26-28, 32-35, and 38-39

Claims 2, 3, 6-8, 14, 15, 18-19, 22, 26-28, 32-35, and 38-39 each depend from one of independent claims 1, 13, and 21 and incorporates their respective recitations. Therefore, for at least similar reasons as those discussed above, the Action failed to make a prima facie case of obviousness of claims 2, 3, 6-8, 14, 15, 18-19, 22, 26-28, 32-35, and 38-39 under 35 U.S.C. § 103(a) over Cooper, and the rejections are improper. Appellant respectfully requests that the rejections of claims 2, 3, 6-8, 14, 15, 18-19, 22, 26-28, 32-35, and 38-39 be withdrawn and that claims 2, 3, 6-8, 14, 15, 18-19, 22, 26-28, 32-35, and 38-39 be allowed.

B. Claims 9-11 and 29-31 are Patentable under 35 U.S.C. § 103(a) over Cooper in view of Palmer

Claims 9-11 and 29-31 each depend from independent claims 1 and 21, respectively, and incorporate their respective recitations. Therefore, for at least similar reasons as those discussed above, Cooper does not teach or suggest each and every recitation of claim 9-11 and 29-31. Furthermore, Appellant does not find relevant disclosure in Palmer, which is directed to the

sharing of identifying information between many data terminals. [Palmer, at column 4, lines 7-14.] Therefore, Cooper and Palmer, taken either separately or in combination, do not teach or suggest each and every recitation of claims 9-11 and 29-31.

It is respectfully submitted that the Action failed to make a prima facie case of obviousness of claims 9-11 and 29-31 under 35 U.S.C. § 103(a) over Cooper and Palmer, and that the rejections are improper. Appellant respectfully requests that the rejections of claims 9-11 and 29-31 be withdrawn and that claims 9-11 and 29-31 be allowed.

VIII. CONCLUSION

Appellant respectfully submits that claims 1-3, 6-11, 13-15, 18, 19, 21, 22, 26-35, 38, and 39 are allowable and respectfully requests that the Board of Patent Appeals and Interferences overrule the Examiner and direct allowance of the rejected claims. Furthermore, Appellant respectfully requests that the Board of Patent Appeals and Interferences direct allowance of objected-to claims 4, 5, 12, 16, 17, 20, 23-25, 36, 37, and 40, each of which depends from a rejected claim.

Accompanying the previous Appeal Brief, Appellant submitted payment of $270 to cover the fee for filing a brief in support of an appeal as specified in 37 C.F.R. § 41.20(b)(2). As the Examiner subsequently re-opened prosecution prior to a decision by the Board of Patent Appeals and Interferences, Appellant does not believe any fees are needed for the instant Appeal Brief. However, should that be necessary, please charge Deposit Account No. 500393. In addition, please credit any overages to the same account.

SCHWABE, WILLIAMSON & WYATT, P.C.

Dated: July 14, 2011

/Ryan C. Fox/
Ryan C. Fox
Registration No. 65,369

CLAIMS APPENDIX

In accordance with 37 CFR 41.37(c)(1)(viii), provided herewith is an appendix containing a copy of the "claims involved in the appeal," which are claims 1-40. It is noted that previously-canceled claims 41-60 are not "involved in the appeal," and therefore 37 CFR 41.37(c)(1)(viii) does not require a copy of these canceled claims to be included below:

1. (Previously Presented) A method for providing a radio frequency identification (RFID) comprising:

receiving, by a mobile communications device, an instruction to transmit a first data to a RFID reader;

switching a transceiver of the mobile communications device from a first state to a second state, the transceiver configured to output voice call signals in the first state and to output RFID signals in the second state; and

outputting the first data by the transceiver in the second state, the transceiver outputting the first data as a radio frequency signal in a format employed by the RFID reader.

2. (Previously Presented) The method of claim 1, wherein said transceiver comprises a first signal processing unit configured to process voice call signals and a second signal processing unit configured to process RFID signals, said switching comprising coupling the second signal processing unit to a transmission path of the transceiver.

3. (Previously Presented) The method of claim 1, wherein said first data comprises a selected one of a security key and an identifier.

4. (Previously Presented) The method of claim 3, wherein said security key comprises a selected one of a garage door key, an exterior door key, an interior door key, and a motor vehicle door key.

5. (Previously Presented) The method of claim 1, wherein said first data comprises an identifier, and said identifier comprises a selected one of a social security number, a driver's license number, an affinity program account number, and a credit card number.

6. (Original) The method of claim 1, wherein the method further comprises facilitating the user in selecting the first data from a plurality of data using the mobile communication device.

7. (Original) The method of claim 1, wherein the method further comprises facilitating provision of the first data to the mobile communication device.

8. (Previously Presented) The method of claim 7, wherein said facilitating of the provisioning of the data to the mobile communication device includes facilitating provision of at least a signaling attribute associated with the outputting of the data in the format employed by the RFID reader.

9. (Previously Presented) The method of claim 1, wherein the method further comprises: monitoring for proximal presence of the RFID reader by the mobile communication device; and on detection of the RFID reader by the mobile communication device, outputting by the transceiver a second data as a second radio frequency signal, the outputting emulating output of the second data by a RFID transponder of a passive type.

10. (Previously Presented) The method of claim 9, wherein said monitoring comprises sensing for a probing radio frequency signal of the RFID reader by the mobile communication device.

11. (Original) The method of claim 9, wherein said first and second data are the same data.

12. (Original) The method of claim 1, wherein the mobile communication device is a selected one of a wireless mobile phone and a personal digital assistant equipped with communication capability.

13. (Previously Presented) A method for providing a radio frequency identifier (RFID), comprising:

monitoring for proximal presence of a RFID reader by a mobile communication device, the mobile communication device having a transceiver configured to output a RFID signal to the RFID reader, the transceiver being also configured to output a voice call signal for transmission at least in part over a wireless network; and

on detection of the RFID reader, outputting by the transceiver a data as a radio frequency signal in a format employed by the RFID reader.

14. (Previously Presented) The method of claim 13, wherein said monitoring comprises sensing for a probing radio frequency signal of the RFID reader by the mobile communication device.

15. (Original) The method of claim 13, wherein said data comprises a security key.

16. (Original) The method of claim 15, wherein said security key comprises a door key.

17. (Original) The method of claim 16, wherein said door key comprises a selected one of a garage door key, an exterior door key, an interior door key, and a motor vehicle door key.

18. (Original) The method of claim 13, wherein the method further comprises facilitating provision of the data to the mobile communication device.

19. (Previously Presented) The method of claim 18, wherein said facilitating of the provisioning of the data to the mobile communication device includes facilitating provision of at least a signaling attribute associated with the outputting of the data in the format employed by the RFID reader.

20. (Original) The method of claim 13, wherein the mobile communication device is a selected of a wireless mobile phone and a personal digital assistant equipped with communication capability.

21. (Previously Presented) A mobile communication device comprising:

a transmitter configured to transmit a radio frequency signal, the transmitter comprising a first signal processing section and a second signal processing section, the first signal processing section configured to output voice call signals in a first radio frequency range and the second signal processing section configured to output RFID signals in a second radio frequency range;

a storage medium to store a first data and instructions to operate the transmitter, the transmitter being operated to switch between the first and second signal processing sections to selectively (a) output a first data as a RFID signal in a format employed by a RFID reader, in response to a user instruction, and (b) output a voice call signal for transmission over a wireless network; and

a processor coupled to the transmitter and the storage to execute the instructions.

22. (Original) The device of claim 21, wherein said first data comprises a selected one of a security key and an identifier.

23. (Original) The device of claim 22, wherein said first data comprises a security key, and said security key comprises a door key.

24. (Original) The device of claim 23, wherein said door key comprises a selected one of a garage door key, an exterior door key, an interior door key, and a motor vehicle door key.

25. (Original) The device of claim 22, wherein said first data comprises an identifier, and said identifier comprises a selected one of a social security number, a driver's license number, an affinity program account number, and a credit card number.

26. (Original) The device of claim 21, wherein the instructions are further designed to facilitate the user in selecting the first data from a plurality of data, and instructing said output.

27. (Original) The device of claim 21, wherein the instructions are further designed to facilitate provision of the first data to the mobile communication device.

28. (Original) The device of claim 27, wherein the instructions are further designed to include with said facilitating, provisioning of at least a signaling attribute associated with the outputting of the first data in the form of a radio frequency signal.

29. (Previously Presented) The device of claim 21, wherein the instructions are further designed to

monitor for proximal presence of the RFID reader; and

on detection of the RFID reader, operate the transceiver to output a second data as a second RFID signal.

30. (Original) The device of claim 29, wherein the instructions are further designed to sense for a probing radio frequency signal of the RFID reader.

31. (Original) The device of claim 29, wherein said first and second data are the same data.

32. (Previously Presented) The device of claim 21, wherein the mobile communication device is a selected one of a wireless mobile phone and a personal digital assistant equipped with communication capability.

33. (Previously Presented) A mobile communication device comprising:

a transmitter configured to transmit a voice call signal in a first operational state and a RFID signal in a second operational state;

a storage medium to store a first data and instructions to switch the transmitter between the first and second operational states to selectively (a) monitor for proximal presence of a radio frequency identifier (RFID) reader, and on detection of a RFID reader, output a data as a RFID signal in a format employed by the RFID reader, and (b) transmit a voice call signal to another user of another communication device at least in part over a wireless network; and

a processor coupled to the transmitter and the storage to execute the instructions.

34. (Original) The device of claim 33, wherein said instructions are further designed to sense for a probing radio frequency signal of the RFID reader.

35. (Original) The device of claim 33, wherein said data comprises a security key.

36. (Original) The device of claim 35, wherein said security key comprises a door key.

37. (Original) The device of claim 36, wherein said door key comprises a selected one of a garage door key, an exterior door key, an interior door key, and a motor vehicle door key.

38. (Original) The device of claim 33, wherein the instructions are further designed to facilitate provision of the data to the mobile communication device.

39. (Original) The device of claim 38, wherein the instructions are further designed to include with said facilitating, provisioning of at least a signaling attribute associated with the outputting of the data in the form of a radio frequency signal.

40. (Original) The device of claim 33, wherein the mobile communication device is a selected of a wireless mobile phone and a personal digital assistant equipped with communication capability.

EVIDENCE APPENDIX

None.

RELATED PROCEEDINGS APPENDIX

None.

Electronic Acknowledgement Receipt

EFS ID:	10520000
Application Number:	10560262
International Application Number:	
Confirmation Number:	3358
Title of Invention:	Emulated radio frequency identification
First Named Inventor/Applicant Name:	Peter Zatloukal
Customer Number:	60172
Filer:	Ryan Christopher Fox/Allyson Dahmen
Filer Authorized By:	Ryan Christopher Fox
Attorney Docket Number:	120083-146181
Receipt Date:	14-JUL-2011
Filing Date:	09-DEC-2005
Time Stamp:	17:43:24
Application Type:	U.S. National Stage under 35 USC 371

Payment information:

Submitted with Payment	no

File Listing:

Document Number	Document Description	File Name	File Size(Bytes)/ Message Digest	Multi Part /.zip	Pages (if appl.)
1	Appeal Brief Filed	Varia_P064_AppealBrief.pdf	893780 88c9d4746495e53b56089e7a2d02329d13cc8588	no	26

Warnings:

Information:

Total Files Size (in bytes):	893780

This Acknowledgement Receipt evidences receipt on the noted date by the USPTO of the indicated documents, characterized by the applicant, and including page counts, where applicable. It serves as evidence of receipt similar to a Post Card, as described in MPEP 503.

New Applications Under 35 U.S.C. 111
If a new application is being filed and the application includes the necessary components for a filing date (see 37 CFR 1.53(b)-(d) and MPEP 506), a Filing Receipt (37 CFR 1.54) will be issued in due course and the date shown on this Acknowledgement Receipt will establish the filing date of the application.

National Stage of an International Application under 35 U.S.C. 371
If a timely submission to enter the national stage of an international application is compliant with the conditions of 35 U.S.C. 371 and other applicable requirements a Form PCT/DO/EO/903 indicating acceptance of the application as a national stage submission under 35 U.S.C. 371 will be issued in addition to the Filing Receipt, in due course.

New International Application Filed with the USPTO as a Receiving Office
If a new international application is being filed and the international application includes the necessary components for an international filing date (see PCT Article 11 and MPEP 1810), a Notification of the International Application Number and of the International Filing Date (Form PCT/RO/105) will be issued in due course, subject to prescriptions concerning national security, and the date shown on this Acknowledgement Receipt will establish the international filing date of the application.

NOTICE OF APPEAL FROM THE EXAMINER TO THE BOARD OF PATENT APPEALS AND INTERFERENCES	Docket Number (Optional) 120083-146181

I hereby certify that this correspondence is being facsimile transmitted to the USPTO or deposited with the United States Postal Service with sufficient postage as first class mail in an envelope addressed to "Commissioner for Patents, P.O. Box 1450, Alexandria, VA 22313-1450" [37 CFR 1.8(a)] on _____

Signature _____

Typed or printed name _____

In re Application of Zatloukal et al.	
Application Number 10/560,262	Filed December 9, 2005
For EMULATED RADIO FREQUENCY IDENTIFICATION	
Art Unit 2887	Examiner Daniel L. Walsh

The last decision of the examiner is hereby **appealed** to the Board of Patent Appeals and Interferences.

The fee for this Notice of Appeal is (37 CFR 41.20(b)(1)) $ 540

[X] Small entity status is claimed. See 37 CFR 1.27. Therefore, the fee shown above is reduced by half, and the resulting fee is: $ 270

[ ] A check in the amount of the fee is enclosed.

[ ] Payment by credit card. Form PTO-2038 is attached.

[ ] The Director has already been authorized to charge fees in this application to a Deposit Account. I have enclosed a duplicate copy of this sheet.

[X] The Director is hereby authorized to charge any fees which may be required, or credit any overpayment to Deposit Account No. 50-0393.

[ ] A petition for an extension of time under 37 CFR 1.136(a) (PTO/SB/22 or equivalent) is enclosed.

WARNING: Information on this form may become public. Credit card information should not be included on this form. Provide credit card information and authorization on PTO-2038.

I am the

[ ] applicant/inventor.

[ ] assignee of record of the entire interest. See 37 CFR 3.71. Statement under 37 CFR 3.73(b) is enclosed.

[X] attorney or agent of record. Registration No. 65,369

[ ] attorney or agent acting under 37 CFR 1.34.

Registration number if acting under 37 CFR 1.34 _____.

/Ryan C. Fox/
Signature

Ryan C. Fox
Typed or Printed Name

206-622-1711
Telephone Number

May 16, 2011
Date

NOTE: Signatures of all the inventors or assignees of record of the entire interest or their representative(s) are required. Submit multiple forms if more than one signature is required, see below*.

[X] *Total of [1] form(s) are submitted.

SEND TO: Mail Stop AF, Commissioner for Patents, P.O. Box 1450, Alexandria, VA 22313-1450.

Electronic Patent Application Fee Transmittal

Application Number:	10560262
Filing Date:	09-Dec-2005
Title of Invention:	Emulated radio frequency identification
First Named Inventor/Applicant Name:	Peter Zatloukal
Filer:	Ryan Christopher Fox/Allyson Dahmen
Attorney Docket Number:	120083-146181

Filed as Small Entity

U.S. National Stage under 35 USC 371 Filing Fees

Description	Fee Code	Quantity	Amount	Sub-Total in USD($)
Basic Filing:				
Pages:				
Claims:				
Miscellaneous-Filing:				
Petition:				
Patent-Appeals-and-Interference:				
Notice of appeal	2401	1	270	270
Post-Allowance-and-Post-Issuance:				
Extension-of-Time:				

Description	Fee Code	Quantity	Amount	Sub-Total in USD($)
Miscellaneous:				
			Total in USD ($)	**270**

Electronic Acknowledgement Receipt

EFS ID:	10095647
Application Number:	10560262
International Application Number:	
Confirmation Number:	3358
Title of Invention:	Emulated radio frequency identification
First Named Inventor/Applicant Name:	Peter Zatloukal
Customer Number:	60172
Filer:	Ryan Christopher Fox/Allyson Dahmen
Filer Authorized By:	Ryan Christopher Fox
Attorney Docket Number:	120083-146181
Receipt Date:	16-MAY-2011
Filing Date:	09-DEC-2005
Time Stamp:	15:58:02
Application Type:	U.S. National Stage under 35 USC 371

Payment information:

Submitted with Payment	yes
Payment Type	Deposit Account
Payment was successfully received in RAM	$270
RAM confirmation Number	2537
Deposit Account	500393
Authorized User	

File Listing:

Document Number	Document Description	File Name	File Size(Bytes)/ Message Digest	Multi Part /.zip	Pages (if appl.)

1	Notice of Appeal Filed	Varia_P064_Ntc_Appeal.pdf	42257 1c4dfc57513ce474ad1f5f2f987bb8a8bb8d041b	no	1
Warnings:					
Information:					
2	Fee Worksheet (PTO-875)	fee-info.pdf	29924 c93f91130656e82f479a6ff6e926fedbeaa2424b	no	2
Warnings:					
Information:					
		Total Files Size (in bytes):	72181		

This Acknowledgement Receipt evidences receipt on the noted date by the USPTO of the indicated documents, characterized by the applicant, and including page counts, where applicable. It serves as evidence of receipt similar to a Post Card, as described in MPEP 503.

<u>New Applications Under 35 U.S.C. 111</u>
If a new application is being filed and the application includes the necessary components for a filing date (see 37 CFR 1.53(b)-(d) and MPEP 506), a Filing Receipt (37 CFR 1.54) will be issued in due course and the date shown on this Acknowledgement Receipt will establish the filing date of the application.

<u>National Stage of an International Application under 35 U.S.C. 371</u>
If a timely submission to enter the national stage of an international application is compliant with the conditions of 35 U.S.C. 371 and other applicable requirements a Form PCT/DO/EO/903 indicating acceptance of the application as a national stage submission under 35 U.S.C. 371 will be issued in addition to the Filing Receipt, in due course.

<u>New International Application Filed with the USPTO as a Receiving Office</u>
If a new international application is being filed and the international application includes the necessary components for an international filing date (see PCT Article 11 and MPEP 1810), a Notification of the International Application Number and of the International Filing Date (Form PCT/RO/105) will be issued in due course, subject to prescriptions concerning national security, and the date shown on this Acknowledgement Receipt will establish the international filing date of the application.

Document code: WFEE

United States Patent and Trademark Office
Sales Receipt for Accounting Date: 08/05/2011

DBROWN ADJ #00000001 Mailroom Dt: 05/16/2011
Seq No: 2537 Sales Acctg Dt: 05/17/2011 500393 10560262
01 FC : 2401 270.00 CR

UNITED STATES PATENT AND TRADEMARK OFFICE

UNITED STATES DEPARTMENT OF COMMERCE
United States Patent and Trademark Office
Address: COMMISSIONER FOR PATENTS
P.O. Box 1450
Alexandria, Virginia 22313-1450
www.uspto.gov

APPLICATION NO.	FILING DATE	FIRST NAMED INVENTOR	ATTORNEY DOCKET NO.	CONFIRMATION NO.
10/560,262	12/09/2005	Peter Zatloukal	120083-146181	3358

60172 7590 03/31/2011
SCHWABE, WILLIAMSON & WYATT, P.C.
1420 FIFTH AVENUE, SUITE 3400
SEATTLE, WA 98101-4010

EXAMINER
WALSH, DANIEL I

ART UNIT	PAPER NUMBER
2887	

MAIL DATE	DELIVERY MODE
03/31/2011	PAPER

Please find below and/or attached an Office communication concerning this application or proceeding.

The time period for reply, if any, is set in the attached communication.

PTOL-90A (Rev. 04/07)

Office Action Summary	Application No.	Applicant(s)	
	10/560,262	ZATLOUKAL ET AL.	
	Examiner	Art Unit	
	DANIEL WALSH	2887	

-- The MAILING DATE of this communication appears on the cover sheet with the correspondence address --

Period for Reply

A SHORTENED STATUTORY PERIOD FOR REPLY IS SET TO EXPIRE 3 MONTH(S) OR THIRTY (30) DAYS, WHICHEVER IS LONGER, FROM THE MAILING DATE OF THIS COMMUNICATION.

- Extensions of time may be available under the provisions of 37 CFR 1.136(a). In no event, however, may a reply be timely filed after SIX (6) MONTHS from the mailing date of this communication.
- If NO period for reply is specified above, the maximum statutory period will apply and will expire SIX (6) MONTHS from the mailing date of this communication.
- Failure to reply within the set or extended period for reply will, by statute, cause the application to become ABANDONED (35 U.S.C. § 133). Any reply received by the Office later than three months after the mailing date of this communication, even if timely filed, may reduce any earned patent term adjustment. See 37 CFR 1.704(b).

Status

1)☐ Responsive to communication(s) filed on 12-21-10.

2a)☐ This action is **FINAL**. 2b)☒ This action is non-final.

3)☐ Since this application is in condition for allowance except for formal matters, prosecution as to the merits is closed in accordance with the practice under *Ex parte Quayle*, 1935 C.D. 11, 453 O.G. 213.

Disposition of Claims

4)☒ Claim(s) 1-40 is/are pending in the application.

4a) Of the above claim(s) _____ is/are withdrawn from consideration.

5)☐ Claim(s) _____ is/are allowed.

6)☒ Claim(s) 1-3,6-11,13-15,18,19,21,22,26-35,38 and 39 is/are rejected.

7)☒ Claim(s) 4,5,12,16,17,20,23-25,36,37 and 40 is/are objected to.

8)☐ Claim(s) _____ are subject to restriction and/or election requirement.

Application Papers

9)☐ The specification is objected to by the Examiner.

10)☐ The drawing(s) filed on _____ is/are: a)☐ accepted or b)☐ objected to by the Examiner.

Applicant may not request that any objection to the drawing(s) be held in abeyance. See 37 CFR 1.85(a).

Replacement drawing sheet(s) including the correction is required if the drawing(s) is objected to. See 37 CFR 1.121(d).

11)☐ The oath or declaration is objected to by the Examiner. Note the attached Office Action or form PTO-152.

Priority under 35 U.S.C. § 119

12)☐ Acknowledgment is made of a claim for foreign priority under 35 U.S.C. § 119(a)-(d) or (f).

a)☐ All b)☐ Some * c)☐ None of:

1.☐ Certified copies of the priority documents have been received.

2.☐ Certified copies of the priority documents have been received in Application No. _____.

3.☐ Copies of the certified copies of the priority documents have been received in this National Stage application from the International Bureau (PCT Rule 17.2(a)).

* See the attached detailed Office action for a list of the certified copies not received.

Attachment(s)

1) ☒ Notice of References Cited (PTO-892)
2) ☐ Notice of Draftsperson's Patent Drawing Review (PTO-948)
3) ☐ Information Disclosure Statement(s) (PTO/SB/08) Paper No(s)/Mail Date _____.
4) ☐ Interview Summary (PTO-413) Paper No(s)/Mail Date. _____ .
5) ☐ Notice of Informal Patent Application
6) ☐ Other: _____.

DETAILED ACTION

1. In view of the Appeal Brief filed on 12-21-10 PROSECUTION IS HEREBY REOPENED. The claims are rejected as set forth below.

To avoid abandonment of the application, appellant must exercise one of the following two options:

(1) file a reply under 37 CFR 1.111 (if this Office action is non-final) or a reply under 37 CFR 1.113 (if this Office action is final); or,

(2) initiate a new appeal by filing a notice of appeal under 37 CFR 41.31 followed by an appeal brief under 37 CFR 41.37. The previously paid notice of appeal fee and appeal brief fee can be applied to the new appeal. If, however, the appeal fees set forth in 37 CFR 41.20 have been increased since they were previously paid, then appellant must pay the difference between the increased fees and the amount previously paid.

A Supervisory Patent Examiner (SPE) has approved of reopening prosecution by signing below:

/STEVEN S. PAIK/

Supervisory Patent Examiner, Art Unit 2887

Claim Rejections - 35 USC § 103

The following is a quotation of 35 U.S.C. 103(a) which forms the basis for all obviousness rejections set forth in this Office action:

> (a) A patent may not be obtained though the invention is not identically disclosed or described as set forth in section 102 of this title, if the differences between the subject matter sought to be patented and

> the prior art are such that the subject matter as a whole would have been obvious at the time the invention was made to a person having ordinary skill in the art to which said subject matter pertains. Patentability shall not be negatived by the manner in which the invention was made.

This application currently names joint inventors. In considering patentability of the claims under 35 U.S.C. 103(a), the examiner presumes that the subject matter of the various claims was commonly owned at the time any inventions covered therein were made absent any evidence to the contrary. Applicant is advised of the obligation under 37 CFR 1.56 to point out the inventor and invention dates of each claim that was not commonly owned at the time a later invention was made in order for the examiner to consider the applicability of 35 U.S.C. 103(c) and potential 35 U.S.C. 102(e), (f) or (g) prior art under 35 U.S.C. 103(a).

1. Claims 1-3, 6-8, 13-15, 18-19, 21-22, 26-28, 32-35, 38-39 are rejected under 35 U.S.C. 103(a) as being unpatentable over Cooper (US 20020123325).

Re claims 1-2, as Cooper teaches (paragraph [0025] + and [0032] +) that the headset (interpreted as the mobile communication/slave), receives an instruction to transmit first data (code/password/identifier) to the RFID reader (phone/master). The Examiner has interpreted the circuitry of the mobile device, such as that responsible for communications, as the transceiver portion which is able to switch between a first and second state (non secure mode (voice mode) and a mode wherein RFID is communicated for authentication). Cooper teaches switching a transceiver of the mobile communications device (headset) from a first state (operating in non-secure mode/voice mode) to a second state (secure mode) (FIG. 2). Cooper teaches the transceiver is configured to output voice call signals in the first state (non secure mode), and that in a

second state RFID is output for authentication. For purposes of Examination, the Examiner has interpreted the first state as a voice state and the second state as when RFID is outputted. Alternatively, the Bluetooth could be the first state (secure connection) and the second state could be a subsequent RFID communication for a subsequent (separate communication attempt).

Re claim 3, the limitations have been discussed above via the code/password required for authentication.

Re claim 6, the Examiner has interpreted that the use is facilitated in selecting the first data from a plurality of data, in that it is done automatically/electronically. Alternatively, the manual entry of the code/password is interpreted as facilitating the user in selecting the first data, such as by requesting the input, which is an obvious expedient to help with ease of use of the device by providing instructions (paragraph [0025]).

Re claim 7, these limits are taught by the action of communicating the code/password.

Re claim 8, as the data is provided to the mobile communication device, and as it is at a frequency, this is interpreted as a signaling attribute (frequency) that is inherently provided as part of the communication, since the communication is at a frequency.

Re claim 13, as discussed above, the headset can be interpreted as the mobile device which is interpreted as having a transceiver (sum of the communications circuitry wherein the RFID and voice/Bluetooth are separate signal processing sections responsible for voice call signal transmission and RFID transmission. The slave (headset) has a proximity detector to sense the RFID reader (paragraph [0028]). The code is output to the reader (via RFID) and the headset outputs voice call signals for transmission over a

wireless network. Alternatively, the phone itself can be interpreted as a mobile device, also requiring a password/code input. Thus RFID is output, and a voice call signal can be output as well (voice network in an insecure mode or Bluetooth network in a secure mode)

Re claim 14-15, the limitations have been discussed above, wherein in the state of the headset device, it is sensing/detecting the signal of the reader, interpreted as a probing signal.

Re claim 18, the limitations have been discussed above.

Re claim 19, the limitations have been discussed above re claim 8.

Re claim 21, Cooper teaches a mobile communications device comprising a transmitter having a first signal processing section and a second signal processing section, the first section configured to output voice call signals in a first RF range and the second signal processing section configured to output RFID signals in a second RF range (paragraph [0025]+ and [0032]+ which teach voice calls over a network, RFID activation to secure the headset connection and the voice/Bluetooth connections which are interpreted to teach the first and second sections. Though silent to the frequency range, the Examiner notes it would have been obvious to one of ordinary skill in the art to use conventional frequency ranges for RF (800-900+Mhz)in order to meet spectrum requirements for countries and to comply with known standards. Bluetooth is taught as 2.4Ghz+. CDMA is in the 800Mhz+ range. The Examiner has interpreted that the sum total of the communications circuitry is the transceiver and hence the RFID and Voice/Bluetooth are separate signal processing sections. Though silent to storing first data and instructions, the Examiner notes that Bluetooth at least, is a software

implemented protocol, broadly interpreted as instructions and a processor are inherent (and thus a storage medium to store first data and instructions would have been obvious in order for the device to function, such as for security key). As discussed above, voice calls are made over a wireless network, and first data is output as an RFID signal employed by an RFID reader when the Bluetooth connection is made. Data can be interpreted as the password/code, for example, and instructions stored, can be interpreted as the software for operation. The limitation "in a format employed by an RFID reader" is sufficiently broad to include frequency/RF signal properties of a signal and does not actually require a RFID reader, and hence the phone can be interpreted as the mobile device. Thus, the Bluetooth and RFID sections (processing) are interpreted to read on the claims, as both are RF frequency, or the voice and (non secure) can be the first mode and Bluetooth can be the second mode as both are radio frequency as well, etc.

Alternatively, the Examiner notes that the Bluetooth headset can be interpreted as the mobile device, wherein a first section outputs voice calls signals in a first RF range (voice communications) and a second section outputs RFID signals in a second RF range (paragraph [0032] and the communication of the communication of the Bluetooth security code). As previously stated, the separate sections for RFID and Bluetooth are interpreted as first and second sections. Processor, first data, and instructions have been discussed above.

As discussed above, and for the claims below the sum total of the circuitry of the mobile device is the transmitter/transceiver, with the RFID and BT as separate states/processing units of the transceiver/transmitter of the mobile device.

Re claim 22, paragraph [0025] teaches a security/identifier as a first data.

Re claims 26-27, though silent, the Examiner notes that such limitations are obvious to one of ordinary skill in the art in order to make the device easier for the user, as discussed above.

Re claim 28, the limitations have been discussed above re claim 8, wherein frequency is interpreted as a signaling attribute of the signal that is inherent.

Re claim 32, a mobile phone is discussed above.

Re claim 33, the limitations have been discussed above; the Examiner has interpreted the Bluetooth/voice and RFID capability as the first and second operational states of the transmitter of the mobile device. As discussed above, a storage medium to store data (identifiers for example) and instructions and a processor to implement, are obvious expedients well within the ordinary skill in the art for enabling functioning of the device. Though silent to monitoring for a RFID reader, the Examiner notes that as the headset is functioning as a tag, it is understood to be in a mode where it is anticipating an interrogation signal, which can broadly be interpreted as monitoring for a RFID reader and then transmitting a voice call signal as discussed above and RIFD signal as discussed above. Further, FIG. 2, 120 teach detecting/sensing a reader signal, interpreted as monitoring. Paragraph [0032] is interpreted as the reader scanning limitations. Thus, the RFID signal is output to the reader upon detection and then a voice call signal can be output once the secure connection is established. Alternatively, a voice call can be output in the non secure mode (or in the Bluetooth mode), and can be switched from/to the RFID mode, since the claim merely recites the transmitter switches between the states, but does not state the order. Thus the limitations of (b) can be interpreted as either the Bluetooth or voice (non-secure) mode.

Re claim 34, an interrogation signal is interpreted as a probing signal.

Re claim 35, the password/code is interpreted as a security key.

Re claim 38, the Examiner has interpreted the entering/inputting of the data to read on such limitations.

Re claim 39, the limitations have been discussed above wherein frequency is an inherent attribute of the signal.

2. Claims 9-11 and 29-31 rejected under 35 U.S.C. 103(a) as being unpatentable over Cooper, as discussed above, in view of Palmer et al. (US 5530702).

The teachings of Cooper have been discussed above, including monitoring (step 120 FIG. 2).

Cooper is silent to outputting by the transceiver a second data as a RF signal emulating a passive RFID, as Cooper teaches outputting a single RF signal.

Palmer et al. teaches (col 3, lines 50) that a transponder can repeat its response signal several times till it is received, Interpreted as a second data/RF signal emulating a passive RFID.

At the time the invention was made, it would have been obvious to one of ordinary skill in the art to combine the teachings of Cooper with those of Palmer.
One would have been motivated to do this to repeat to ensure the signal is received.

Re claim 10, the Examiner has interpreted the device is detecting a signal, broadly interpreted as a probing signal.

Re claim 11, as discussed above the first and second data are the same as the data is sent multiple times to ensure it is received.

Re claims 29-31, the limitations have been discussed above.

Allowable Subject Matter

3. Claims 4, 5, 12, 16-17, 20, 23-25, 36-37, and 40 objected to as being dependent upon a rejected base claim, but would be allowable if rewritten in independent form including all of the limitations of the base claim and any intervening claims.

4. The following is a statement of reasons for the indication of allowable subject matter: The prior art of record fails to teach that the security key is one of a garage door key, exterior door key, interior door key, and motor vehicle door key (re claim 4), that said first data comprises an identifier comprising a selected one of a social security number, drivers license number, affinity program account number, and credit card account number (re claim 5), that facilitating of the provisioning of the data to the mobile communications device includes facilitating provision of at least a signaling attribute associated with the outputting of the data into the format employed by the RFID reader (re claim 8), that the communication device is selected one of a wireless mobile phone and a personal digital assistant equipped with communication capability (re claim 12), that the security key comprises a door key (re claim 16), and wherein facilitating of the provisioning of the data to the mobile device includes facilitating provision of at least a signaling attribute associated with the outputting of the data in the format employed by the RFID reader (re claim 19), that the mobile communication device is selected of a wireless mobile phone and a personal digital assistant equipped with communication capability (re claim 20), that the first data comprises a security key as a door key (re claim 23), that said first data comprises an identifier comprising one of a social security number, drivers license number, affinity program account number, and a credit card

number (re claim 25), that the instructions are further designed to include with said facilitating, provisioning of at least a signaling attribute associated with the outputting of the first data into the form of a radio frequency signal (re claim 28), that the security key comprises a door key (re claim 36), that the instructions are further designed to include with said facilitating, provisioning of at least a signaling attribute associated with the outputting of the data in the form of a radio frequency signal (re claim 39), and that the mobile device is selected of a wireless mobile phone a personal digital assistant equipped with communication capability (re claim 40).

Response to Arguments

5. Applicant's arguments with respect to claims have been considered but are moot in view of the new ground(s) of rejection.

6. The Examiner further notes that if the Applicants wants a special meaning/definition of a transceiver/transmitter of the device, that such limitations should be placed in the claim body. The Examiner has interpreted the transceiver/transmitter of the device, as discussed above, such as comprising the circuitry capable of performing the RFID and Bluetooth (for voice) communications. Also even the non secure (voice) mode reads on the limitations of voice communication/mode/processing section in some of the claims as it communicates a voice signal.

Conclusion

Any inquiry concerning this communication or earlier communications from the examiner should be directed to DANIEL WALSH whose telephone number is (571)272-2409. The examiner can normally be reached on M-F 9am-7pm.

If attempts to reach the examiner by telephone are unsuccessful, the examiner's supervisor, Steven Paik can be reached on 571-272-2404. The fax phone number for the organization where this application or proceeding is assigned is 571-273-8300.

Information regarding the status of an application may be obtained from the Patent Application Information Retrieval (PAIR) system. Status information for published applications may be obtained from either Private PAIR or Public PAIR. Status information for unpublished applications is available through Private PAIR only. For more information about the PAIR system, see http://pair-direct.uspto.gov. Should you have questions on access to the Private PAIR system, contact the Electronic Business Center (EBC) at 866-217-9197 (toll-free). If you would like assistance from a USPTO Customer Service Representative or access to the automated information system, call 800-786-9199 (IN USA OR CANADA) or 571-272-1000.

/DANIEL WALSH/
Primary Examiner, Art Unit 2887

Notice of References Cited	Application/Control No. 10/560,262	Applicant(s)/Patent Under Reexamination ZATLOUKAL ET AL.	
	Examiner DANIEL WALSH	Art Unit 2887	Page 1 of 2

U.S. PATENT DOCUMENTS

*		Document Number Country Code-Number-Kind Code	Date MM-YYYY	Name	Classification
*	A	US-4,119,800 A	10-1978	Girardi, Frank D.	455/410
*	B	US-5,530,702 A	06-1996	Palmer et al.	370/445
*	C	US-6,026,308 A	02-2000	Hsieh, Mingchih	455/557
*	D	US-6,359,866 B1	03-2002	Svensson et al.	370/331
*	E	US-6,434,395 B1	08-2002	Lubin et al.	455/466
*	F	US-6,771,981 B1	08-2004	Zalewski et al.	455/557
*	G	US-2004/0171373 A1	09-2004	Suda et al.	455/415
*	H	US-2006/0017544 A1	01-2006	Tanaka et al.	340/010.2
*	I	US-2006/0044111 A1	03-2006	Kollar et al.	340/010.1
*	J	US-2006/0097848 A1	05-2006	Davidson et al.	340/010.2
*	K	US-2007/0030124 A1	02-2007	LEE, Won-Jun	340/010.1
*	L	US-2007/0032261 A1	02-2007	Boyer et al.	455/550.1
*	M	US-2007/0159330 A1	07-2007	Chakraborty et al.	340/572.1

FOREIGN PATENT DOCUMENTS

*		Document Number Country Code-Number-Kind Code	Date MM-YYYY	Country	Name	Classification
	N					
	O					
	P					
	Q					
	R					
	S					
	T					

NON-PATENT DOCUMENTS

*		Include as applicable: Author, Title Date, Publisher, Edition or Volume, Pertinent Pages)
	U	
	V	
	W	
	X	

*A copy of this reference is not being furnished with this Office action. (See MPEP § 707.05(a).)
Dates in MM-YYYY format are publication dates. Classifications may be US or foreign.

Notice of References Cited	Application/Control No. 10/560,262	Applicant(s)/Patent Under Reexamination ZATLOUKAL ET AL.	
	Examiner DANIEL WALSH	Art Unit 2887	Page 2 of 2

U.S. PATENT DOCUMENTS

*		Document Number Country Code-Number-Kind Code	Date MM-YYYY	Name	Classification
*	A	US-7,280,810 B2	10-2007	Feher, Kamilo	455/137
*	B	US-2008/0057876 A1	03-2008	Hsia et al.	455/69
*	C	US-2008/0146167 A1	06-2008	Rofougaran, Ahmadreza (Reza)	455/88
*	D	US-7,440,743 B2	10-2008	Hara et al.	455/343.2
*	E	US-2009/0058652 A1	03-2009	Hardy et al.	340/572.1
*	F	US-2009/0221232 A1	09-2009	Estevez et al.	455/41.1
*	G	US-7,605,701 B2	10-2009	Lee, Won-Jun	340/572.1
*	H	US-2010/0137024 A1	06-2010	Maguire, Yael G.	455/552.1
*	I	US-2010/0239079 A1	09-2010	BAO, JING	379/110.01
	J	US-			
	K	US-			
	L	US-			
	M	US-			

FOREIGN PATENT DOCUMENTS

*		Document Number Country Code-Number-Kind Code	Date MM-YYYY	Country	Name	Classification
	N					
	O					
	P					
	Q					
	R					
	S					
	T					

NON-PATENT DOCUMENTS

*		Include as applicable: Author, Title Date, Publisher, Edition or Volume, Pertinent Pages)
	U	
	V	
	W	
	X	

*A copy of this reference is not being furnished with this Office action. (See MPEP § 707.05(a).)
Dates in MM-YYYY format are publication dates. Classifications may be US or foreign.

EAST Search History

EAST Search History (Prior Art)

Ref #	Hits	Search Query	DBs	Default Operator	Plurals	Time Stamp
S1	1	"6771981".pn.	US-PGPUB; USPAT; EPO; JPO	OR	OFF	2011/03/04 13:03
S2	1	"20040087273".pn.	US-PGPUB; USPAT; EPO; JPO	OR	OFF	2011/03/04 13:04
S3	699	(transceiver) with switch$4 same (telephone or phone or cellular) same (RFID or transponder or "radio frequency")	US-PGPUB; USPAT; EPO; JPO	OR	ON	2011/03/04 14:17
S4	32	(transceiver) with (chang$4 or alter$4 or switch$4) near5 (mode or state or configuration) same (telephone or phone or cellular) same (RFID or transponder or "radio frequency")	US-PGPUB; USPAT; EPO; JPO	OR	ON	2011/03/04 14:22
S5	2	(transceiver) with (chang$4 or alter$4 or switch$4) near5 (mode or state or configuration) same (telephone or phone or cellular) same (RFID)	US-PGPUB; USPAT; EPO; JPO	OR	ON	2011/03/04 15:01
S6	8	(transceiver or (transmitter with receiver)) with (chang$4 or alter $4 or switch$4 or adjust$4) with (mode or state or configuration) same (telephone or phone or cellular) same (RFID or transponder)	US-PGPUB; USPAT; EPO; JPO	OR	ON	2011/03/04 15:06
S7	1	"6421347".pn.	US-PGPUB; USPAT; EPO; JPO	OR	ON	2011/03/04 15:11
S8	12	("455"/$.ccls. "340"/$.ccls.) and (phone or cellular) same (rfid or transponder) same (switch$4 or chang$4 or alter$4) with (mode or configuration or state) same (transceiver or (transmitter with receiver))	US-PGPUB; USPAT; EPO; JPO	OR	ON	2011/03/04 15:16

S9	1	"20020123325".pn.	US-PGPUB; USPAT; EPO; JPO	OR	ON	2011/03/04 15:23
S10	73	(transmitter or transceiver) same (mode or format or state of configuration) same output$4 same (RFID) same (cellular or voice or telephone)	US-PGPUB; USPAT; EPO; JPO	OR	ON	2011/03/04 16:23
S11	35	(transmitter or transceiver) same (mode or format or state of configuration) same output$4 same (RFID) same (cellular or voice or telephone) same second same frequency	US-PGPUB; USPAT; EPO; JPO	OR	ON	2011/03/04 16:23
S12	42	(transmitter or transceiver) same (mode or format or state of configuration) same output$4 same (RFID) same (cellular or voice or telephone) same (differ $4 or second) same frequency	US-PGPUB; USPAT; EPO; JPO	OR	ON	2011/03/04 16:23
S13	1	(phone or telephone) same (RFID) same (voice) same (mode or format or state of configuration) same (differ$4 or second) with frequency	US-PGPUB; USPAT; EPO; JPO	OR	ON	2011/03/04 16:34
S14	854	(phone or telephone) same (RFID) same (voice or cellular or call$4) same (mode or format or state of configuration or transceiver or transmitter or receiv$4) and (differ$4 or second) with frequency	US-PGPUB; USPAT; EPO; JPO	OR	ON	2011/03/04 16:35
S15	969	("455"/$.ccls. "340"/$.ccls.) and ((phone or telephone) same (RFID) same (voice or cellular or call$4) same (mode or format or state of configuration or transceiver or transmitter or receiv$4))	US-PGPUB; USPAT; EPO; JPO	OR	ON	2011/03/04 16:35
S16	179	("455"/$.ccls. "340"/$.ccls.) and ((phone or telephone) same (RFID) same (voice or cellular or call$4) same (mode or format or state of configuration or transceiver or transmitter or receiv$4) with (first or second or chang$4 or select$4 or switch $4))	US-PGPUB; USPAT; EPO; JPO	OR	ON	2011/03/04 16:35
S17	1	"20080146167".pn.	US-PGPUB; USPAT; EPO; JPO	OR	ON	2011/03/04 16:56

S18	63	("455"/$.ccls. "340"/$.ccls.) and (phone or telephone) with switch $4 with rfid	US-PGPUB; USPAT; EPO; JPO	OR	ON	2011/03/04 17:01
S19	1021	("455"/$.ccls. "340"/$.ccls.) and (phone or telephone) with (read $4 or interrogat$4) with rfid	US-PGPUB; USPAT; EPO; JPO	OR	ON	2011/03/04 17:04
S20	132	("455"/$.ccls. "340"/$.ccls.) and (phone or telephone) with (read $4 or interrogat$4) with rfid same (mode or state)	US-PGPUB; USPAT; EPO; JPO	OR	ON	2011/03/04 17:04
S21	10	("455"/$.ccls. "340"/$.ccls.) and (phone or telephone) with (read $4 or interrogat$4) with rfid same (mode or state) same (automatic$4)	US-PGPUB; USPAT; EPO; JPO	OR	ON	2011/03/04 17:05
S22	59	("455"/$.ccls. "340"/$.ccls.) and (phone or telephone) with (read $4 or interrogat$4) with rfid same (mode or state) same (detect$4 or sens$4)	US-PGPUB; USPAT; EPO; JPO	OR	ON	2011/03/04 17:06
S23	29	("455"/$.ccls.) and (phone or telephone or mobile or cellular $4) same (read$4 or interrogat $4) with rfid same (mode or state or transceiver or transmitter or receiver) same (detect$4 or sens$4 or automatic $4) same (voice or call$4)	US-PGPUB; USPAT; EPO; JPO	OR	ON	2011/03/04 17:08
S24	1	"20020123325".pn.	US-PGPUB; USPAT; EPO; JPO	OR	OFF	2011/03/07 09:29
S25	1	"6771981".pn.	US-PGPUB; USPAT; EPO; JPO	OR	OFF	2011/03/07 10:29
S26	118	(chang$4 or switch$4) with mode with transceiver same (phone or telephone) same (RFID or "radio frequency")	US-PGPUB; USPAT; EPO; JPO	OR	ON	2011/03/07 12:04
S27	10323	455/410,411,41.2,557.ccls.	US-PGPUB; USPAT; EPO; JPO	OR	ON	2011/03/07 12:04
S28	5	S27 and S26	US-PGPUB; USPAT; EPO; JPO	OR	ON	2011/03/07 12:04

S29	661	(chang$4 or switch$4) with mode same (phone or telephone) same (RFID or "radio frequency")	US-PGPUB; USPAT; EPO; JPO	OR	ON	2011/03/07 12:05
S30	34	455/410,411,41.2,557.ccls. and S29	US-PGPUB; USPAT; EPO; JPO	OR	ON	2011/03/07 12:11
S31	83	(chang$4 or switch$4) with (state or mode) same (phone or telephone) same (RFID)	US-PGPUB; USPAT; EPO; JPO	OR	ON	2011/03/07 13:26
S32	1	"20020123325".pn.	US-PGPUB; USPAT; EPO; JPO	OR	OFF	2011/03/13 22:56

3/14/2011 10:12:48 AM
C:\Documents and Settings\dwalsh1\My Documents\EAST\Workspaces\East Searches\10560262_2.wsp

Search Notes	Application/Control No.	Applicant(s)/Patent Under Reexamination
	10560262	ZATLOUKAL ET AL.
	Examiner	**Art Unit**
	KUMIKO C KOYAMA	2887

SEARCHED

Class	Subclass	Date	Examiner
235	375, 380, 492	02/28/2009	KCK
455	557	02/28/2009	KCK
340	505, 539.1, 539.11	02/28/2009	KCK
Updated	Search	08/15/2009	KCK
Updated	Search	12/20/2009	KCK
340	10.1,10.3,10.5,572.1	6-11-10	dw

SEARCH NOTES

Search Notes	Date	Examiner
East Search	02/28/2009	KCK
Updated Search	08/15/2009	KCK
Updated East Search	12/20/2009	KCK
class 340 455 keyword search	6-11-10	dw
consulted L. West class 455	6-11-10	dw
consulted E. Halloway class 340	6-10-10	dw
updated search	3-10-11	dw
class 235 340 455 keyword search	3-10-11	dw
consulted L. West class 455	3-10-11	dw

INTERFERENCE SEARCH

Class	Subclass	Date	Examiner

EAST Search History

EAST Search History (Prior Art)

Ref #	Hits	Search Query	DBs	Default Operator	Plurals	Time Stamp
S1	1	"20020123325".pn.	US-PGPUB; USPAT; EPO; JPO	OR	OFF	2011/03/22 14:08
S2	1	10/560,262	US-PGPUB; USPAT; EPO; JPO	OR	OFF	2011/03/22 14:35
S3	1	S2 and "same data"	US-PGPUB; USPAT; EPO; JPO	OR	OFF	2011/03/22 14:35
S4	1	10/560,262 and second	US-PGPUB; USPAT; EPO; JPO	OR	OFF	2011/03/22 16:46
S5	3	rfid near3 tag with (output$4 or broadcast $3) near3 (duplicat$4 or repeat$3)	US-PGPUB; USPAT; EPO; JPO	OR	OFF	2011/03/22 17:55
S6	21	(rfid near3 tag or transponder) with (output$4 or broadcast $3 or respond$4) near3 (duplicat$4 or repeat$3)	US-PGPUB; USPAT; EPO; JPO	OR	OFF	2011/03/22 17:55
S7	284	(rfid near3 tag or transponder) with (output$4 or broadcast $3 or respond$4 or response or signal$3) near3 (duplicat$4 or repeat$3)	US-PGPUB; USPAT; EPO; JPO	OR	ON	2011/03/22 18:02
S8	1	10/560,262 and monitor$3	US-PGPUB; USPAT; EPO; JPO	OR	OFF	2011/03/25 17:03

3/25/2011 8:51:56 PM

C:\ Documents and Settings\ dwalsh1\ My Documents\ EAST\ Workspaces\ East Searches\ 10560262_3.wsp

Index of Claims	Application/Control No.	Applicant(s)/Patent Under Reexamination
	10560262	ZATLOUKAL ET AL.
	Examiner	**Art Unit**
	WALSH DANIEL	2887

✓	Rejected	-	Cancelled	N	Non-Elected	A	Appeal
=	Allowed	÷	Restricted	I	Interference	O	Objected

☐ Claims renumbered in the same order as presented by applicant ☐ CPA ☐ T.D. ☐ R.1.47

CLAIM		DATE								
Final	Original	02/28/2009	08/15/2009	12/20/2009	06/11/2010	03/14/2011				
	1	✓	✓	✓	✓	✓				
	2	✓	✓	✓	✓	✓				
	3	✓	✓	✓	✓	✓				
	4	✓	✓	✓	✓	O				
	5	✓	✓	✓	✓	O				
	6	✓	✓	✓	✓	✓				
	7	✓	✓	✓	✓	✓				
	8	✓	✓	✓	✓	✓				
	9	✓	✓	✓	✓	✓				
	10	✓	✓	✓	✓	✓				
	11	✓	✓	✓	✓	✓				
	12	✓	✓	✓	✓	O				
	13	✓	✓	✓	✓	✓				
	14	✓	✓	✓	✓	✓				
	15	✓	✓	✓	✓	✓				
	16	✓	✓	✓	✓	O				
	17	✓	✓	✓	✓	O				
	18	✓	✓	✓	✓	✓				
	19	✓	✓	✓	✓	✓				
	20	✓	✓	✓	✓	O				
	21	✓	✓	✓	✓	✓				
	22	✓	✓	✓	✓	✓				
	23	✓	✓	✓	✓	O				
	24	✓	✓	✓	✓	O				
	25	✓	✓	✓	✓	O				
	26	✓	✓	✓	✓	✓				
	27	✓	✓	✓	✓	✓				
	28	✓	✓	✓	✓	✓				
	29	✓	✓	✓	✓	✓				
	30	✓	✓	✓	✓	✓				
	31	✓	✓	✓	✓	✓				
	32	✓	✓	✓	✓	✓				
	33	✓	✓	✓	✓	✓				
	34	✓	✓	✓	✓	✓				
	35	✓	✓	✓	✓	✓				
	36	✓	✓	✓	✓	O				

Index of Claims	Application/Control No.	Applicant(s)/Patent Under Reexamination
	10560262	ZATLOUKAL ET AL.
	Examiner	**Art Unit**
	WALSH DANIEL	2887

✓	Rejected	-	Cancelled	N	Non-Elected	A	Appeal
=	Allowed	÷	Restricted	I	Interference	O	Objected

☐ Claims renumbered in the same order as presented by applicant ☐ CPA ☐ T.D. ☐ R.1.47

CLAIM		DATE								
Final	Original	02/28/2009	08/15/2009	12/20/2009	06/11/2010	03/14/2011				
	37	✓	✓	✓	✓	O				
	38	✓	✓	✓	✓	✓				
	39	✓	✓	✓	✓	✓				
	40	✓	✓	✓	✓	O				
	41	-	-	-						
	42	-	-	-						
	43	-	-	-						
	44	-	-	-						
	45	-	-	-						
	46	-	-	-						
	47	-	-	-						
	48	-	-	-						
	49	-	-	-						
	50	-	-	-						
	51	-	-	-						
	52	-	-	-						
	53	-	-	-						
	54	-	-	-						
	55	-	-	-						
	56	-	-	-						
	57	-	-	-						
	58	-	-	-						
	59	-	-	-						
	60	-	-	-						

PATENT

IN THE UNITED STATES PATENT AND TRADEMARK OFFICE

Applicant(s)	:	Zatloukal et al.
Application No.	:	10/560,262
Filed	:	December 9, 2005
For	:	EMULATED RADIO FREQUENCY INDENTIFICATION

Examiner	:	Daniel I. Walsh
Art Unit	:	2887
Docket No.	:	120083-146181
Date	:	December 21, 2010

Mail Stop Appeal Brief - Patents
Commissioner for Patents
P.O. Box 1450
Alexandria, VA 22313-1450

APPELLANT'S BRIEF

Commissioner for Patents:

This appellant's brief is being filed under 37 CFR 41.37 in furtherance of the Notice of Appeal, filed in this case on October 21, 2010.

The fees required under Section 1.17(c), and any required request for extension of time for filing this appellant's brief and fees therefor, are dealt with in the accompanying papers.

I. REAL PARTY IN INTEREST

Varia Holdings LLC is the real party in interest.

II. RELATED APPEALS AND INTERFERENCES

None.

III. STATUS OF CLAIMS

Claims 1-40 are pending and have been finally rejected. The rejections of claims 1-40 are being appealed herein.

Claims 41-60 have been previously canceled.

No claims stand allowed.

No claims stand objected to.

IV. STATUS OF AMENDMENTS

The amendments offered in the response filed on March 24, 2010 were entered. Claims 1-40 were subsequently rejected in the Final Office Action mailed on June 22, 2010 (hereinafter referred to as "the Final Office Action"). Amendments to claim 1 that were offered in the Amendment After Final filed September 21, 2010 were not entered for purposes of appeal. A Notice of Appeal was filed on October 21, 2010, and the present appellant's brief is being filed to address the rejections set forth in the Final Office Action.

V. SUMMARY OF CLAIMED SUBJECT MATTER

The following discusses independent claims 1, 13, 21, and 33. According to 37 CFR 41.67(c)(1)(v), a concise explanation of the subject matter in the independent claims has been set forth below with reference to the specification by page and line numbers, and to the drawings, if any, by reference characters. Accordingly, the following shows claims 1, 13, 21, and 33 together with the required reference information in brackets [ ] and *italicized*. Of course, the reference numbers and other bracketed information are illustrative only and are not intended to limit the claims only to the exact embodiments shown and described in the specification and figures of the present application.

1. A method for providing a radio frequency identification (RFID) comprising:

receiving, by a mobile communications device, an instruction to transmit a first data to a RFID reader [*pg. 6, lines 3-20; pg. 14, lines 24-27; pg. 12, line 30 to pg. 13, line 4; pg. 14, lines 13-15 and 24-27; Fig. 1 mobile communication HW/SW elements 104, RFID Emulation HW/SW elements 106, RFID 110, and RFID reader 120; Fig. 2, block*

203; Fig. 3, support logic 322; Fig. 6b, list 614 and screen 612; Fig. 7, blocks 704 and 706];

switching a transceiver of the mobile communications device from a first state to a second state, the transceiver configured to output voice call signals in the first state and to output RFID signals in the second state [*pg. 6, lines 3-20; pg. 9, lines 13-14 and 25-27; pg. 11, lines 19-28; pg. 12, lines 1-15; Fig. 3, transceiver 308 and processor 302; Fig. 4, switch 404, Joint RF TX/RX 402, high frequency signal processing 410, and low frequency signal processing 408*]; and

outputting the first data by the transceiver in the second state, the transceiver outputting the first data as a radio frequency signal in a format employed by the RFID reader [*pg. 6, lines 9-28; pg. 7, lines 16-21; pg. 8, lines 4-17; pg. 11, lines 19-24; pg. 12, lines 1-3 and 12-26; pg. 13, lines 20-30; pg. 14, lines 3-5 and 24-28; Fig. 1, mobile communication HW/SW elements 104, RFID Emulation HW/SW elements 106, RFID 110, and RFID reader 120; Fig. 2, block 204; Fig. 3, transceiver 308 and processor 302; Fig. 4, switch 404, Joint RF TX/RX 402, and low frequency signal processing 408; Fig. 7, block 710*].

13. A method for providing a radio frequency identifier (RFID), comprising:

monitoring for proximal presence of a RFID reader by a mobile communication device [*pg. 8, lines 18-28; pg. 13, line 31 to pg. 14, line 12; Fig. 1, mobile communication HW/SW elements 104, RFID Emulation HW/SW elements 106, RFID 110, and RFID reader 120; Fig. 2, block 205*], the mobile communication device having a transceiver configured to output a RFID signal to the RFID reader, the transceiver being also configured to output a voice call signal for transmission at least in part over a wireless network [*pg. 6, lines 3-20; pg. 7, lines 8-15; pg. 9, lines 13-14 and 25-27; pg. 11, lines 19-28; pg. 12, lines 1-15; Fig. 3, transceiver 308 and processor 302; Fig. 4, switch 404, Joint RF TX/RX 402, high frequency signal processing 410, and low frequency signal processing 408*]; and

on detection of the RFID reader, outputting by the transceiver a data as a radio frequency signal in a format employed by the RFID reader [*pg. 6, lines 9-28; pg. 7, lines*

16-21; pg. 8, lines 4-13 and 20-28; pg. 11, lines 19-24; pg. 12, lines 1-3 and 12-26; pg. 13, line 20 to pg. 14, line 5 and 24-28; Fig. 1, mobile communication HW/SW elements 104, RFID Emulation HW/SW elements 106, RFID 110, and RFID reader 120; Fig. 2, block 206; Fig. 3, transceiver 308 and processor 302; Fig. 4, switch 404, Joint RF TX/RX 402, and low frequency signal processing 408].

21. A mobile communication device comprising:

a transmitter configured to transmit a radio frequency signal, the transmitter comprising a first signal processing section and a second signal processing section, the first signal processing section configured to output voice call signals in a first radio frequency range and the second signal processing section configured to output RFID signals in a second radio frequency range [*pg. 6, lines 3-20; pg. 9, lines 13-14 and 25-27; pg. 11, lines 19-28; pg. 12, lines 1-16; Fig. 1, mobile communication HW/SW elements 104, RFID Emulation HW/SW elements 106, RFID 110; Fig. 3, transceiver 308 and processor 302; Fig. 4, switch 404, Joint RF TX/RX 402, high frequency signal processing 410, and low frequency signal processing 408*];

a storage medium to store a first data and instructions to operate the transmitter [*pg. 8, lines 14-17; pg. 12, lines 30-32; pg. 9, lines 1-12; Fig. 3, memory 304 with operating logic 320 and RFID feature 322*], the transmitter being operated to switch between the first and second signal processing sections to selectively (a) output a first data as a RFID signal in a format employed by a RFID reader, in response to a user instruction, and (b) output a voice call signal for transmission over a wireless network [*pg. 6, lines 3-20; pg. 9, lines 13-14 and 25-27; pg. 11, lines 19-28; pg. 12, lines 1-15; Fig. 3, transceiver 308 and processor 302; Fig. 4, switch 404, Joint RF TX/RX 402, high frequency signal processing 410, and low frequency signal processing 408*]; and

a processor coupled to the transmitter and the storage to execute the instructions [*pg. 9, lines 1-5, 13-19, and 25-27; Fig. 3, processor 302; see also Fig. 4, arrows to/from processor*].

33. (Previously Presented) A mobile communication device comprising:

a transmitter configured to transmit a voice call signal in a first operational state and a RFID signal in a second operational state [*pg. 6, lines 3-20; pg. 9, lines 13-14 and 25-27; pg. 11, lines 19-28; pg. 12, lines 1-15; Fig. 3, transceiver 308 and processor 302; Fig. 4, switch 404, Joint RF TX/RX 402, high frequency signal processing 410, and low frequency signal processing 408*];

a storage medium to store a first data and instructions to switch the transmitter between the first and second operational states to selectively (a) monitor for proximal presence of a radio frequency identifier (RFID) reader [*pg. 8, lines 14-28; pg. 12, lines 30-32; pg. 9, lines 1-12; pg. 12, lines 30-32; Fig. 2, block 205; Fig. 3, memory 304 with operating logic 320 and RFID feature 322; Fig. 4, switch 404, Joint RF TX/RX 402, high frequency signal processing 410, and low frequency signal processing 408*], and on detection of a RFID reader, output a data as a RFID signal in a format employed by the RFID reader [*pg. 6, lines 9-28; pg. 7, lines 16-21; pg. 8, lines 4-13 and 20-28; pg. 11, lines 19-24; pg. 12, lines 1-3 and 12-26; pg. 13, line 20 to pg. 14, line 5 and 24-28; Fig. 1, mobile communication HW/SW elements 104, RFID Emulation HW/SW elements 106, RFID 110, and RFID reader 120; Fig. 2, block 206; Fig. 3, transceiver 308 and processor 302; Fig. 4, switch 404, Joint RF TX/RX 402, and low frequency signal processing 408*], and (b) transmit a voice call signal to another user of another communication device at least in part over a wireless network [*pg. 6, lines 3-20 pg. 7, lines 8-15; pg. 12, lines 1-11; Fig. 4, , switch 404, Joint RF TX/RX 402, and high frequency signal processing 410*; and

a processor coupled to the transmitter and the storage to execute the instructions [*pg. 9, lines 1-5, 13-19, and 25-27; Fig. 3, processor 302; see also Fig. 4, arrows to/from processor*].

37 CFR 41.37(c)(1)(v) requires "For each independent claim involved in the appeal and for each dependent claim argued separately under the provisions of paragraph (c)(1)(vii) of this section, every ***means plus function*** and ***step plus function*** as permitted by 35 U.S.C. 112, sixth paragraph, must be identified and the structure, material, or acts described in the specification as corresponding to each claimed function must be set forth with reference to the specification by page and line number, and to the drawing, if any, by reference characters"

(emphasis ours). There are ***no*** means-plus-function or steps-plus-function language in the claims for which this requirement of 37 CFR 41.37(c)(1)(v) applies.

VI. GROUNDS OF REJECTION TO BE REVIEWED ON APPEAL

Whether claims 1-40 are unpatentable under 35 U.S.C. § 103 for being obvious over U.S. Patent No. 6,771,981 to Zalewski *et al.* (hereinafter "Zalewski").

Whether claims 1-40 are unpatentable under 35 U.S.C. § 103 for being obvious over Zalewski in view of U.S. Patent Application Publication No. 2004/0087273 to Perttila *et al.* (hereinafter Perttila).

VII. ARGUMENT

The rejections of claims 1-40 under 35 U.S.C. § 103 are improper because the cited references (whether singly or in combination) do not teach or suggest all of the claim limitations.

A. Claims 1-40 are allowable over Zalewski under 35 U.S.C. § 103.

On page 6 of the Final Office Action, claims 1-40 were rejected under 35 U.S.C. § 103 as being allegedly unpatentable over Zalewski. Applicants respectfully submit that the rejections are improper and should be withdrawn for at least the reasons discussed below.

1. Claims 1, 13, 21, and 33 are allowable over Zalewski under 35 U.S.C. § 103.

Consistent with a long line of judicial holdings, MPEP § 2143.03 states that "All words in a claim must be considered in judging the patentability of that claim against the prior art. *In re Wilson*, 424 F.2d 1382, 1385, 165 USPQ 494, 496 (CCPA 1970)." In addition, "the omission of an element and retention of its function is an indicia of unobviousness" (MPEP 2144.04, citing *In re Edge*, 359 F.2d 896, 149 USPQ 556 (CCPA 1966)).

Independent claim 1 recites, *inter alia*, the following (emphasis ours):

"***switching a transceiver*** of the mobile communications device ***from a first state to a second state***, the transceiver ***configured to output voice call signals in the first state and to output RFID signals in the second state***"

Read properly as a **whole**, as required by law, claim 1 is directed to a method for providing a radio frequency identification (RFID) to a RFID reader using a mobile communications device, which effectively emulates a RFID transponder. The method requires the mobile communication device to have "***a*** *transceiver*" that can be switched from a first state to a second state. The transceiver must be "*configured to output voice call signals in the first state and to output RFID signals in the second state.*" Thus, claim 1 requires (inter alia) the switching of "a transceiver of a mobile communication device" from a first state in which the transceiver is configured to output voice calls, to a second state in which the transceiver is configured to output RFID signals

Zalewski does not teach or suggest these features. In particular, as conceded in the Final Office Action, "Zalewski is silent to switching modes of a transceiver" (Final Office Action, pg. 3).

Zalewski discloses a changeable electronic cover for a mobile phone. The device cover has an embedded RF transponder that is responsive to interrogation by an electric field (Abstract, Fig. 2b). The device cover provides an identification number and/or other data in response to the interrogation signal (see Abstract). Zalewski discloses that the device cover 100 can be attached to a mobile phone such as mobile station 4, which has a conventional radio frequency component 19 for transmitting and receiving calls and messages (Fig. 2a; col. 6, line 66 to col. 7, line 3, "a known component of mobile phones, which is used to transmit and receive calls and messages using radio frequencies in a radio communication network, such as a GSM network, e.g. through a mobile services switching center MSC"). The device cover 100 can interface with mobile station 4 via interface contacts 180 of the device cover and data connector 20 of the mobile station, allowing the device cover to share memory with the mobile station and/or to send signals to the master control unit (MCU) 13 (col. 8, lines 8-12 and 39-56; col. 11, lines 39-58; Figs. 2a, 2b).

On pages 3-4 of the Final Office Action, the Examiner stated that the transponder of the device has circuitry to communicate with an interrogator, and that the telephone for voice communication also has processing units/circuitry for voice communication. The Examiner then asserted the "components/circuitry devices/phone including cover, etc. (RFID components and voice components for RFID and voice communication by the device) together" as teaching "the "transceiver" of the device (means to send and receive)."

Applicants respectfully disagree with the Examiner's interpretation of the conventional mobile phone transmitter and receiver in combination with the transponder of the changeable device cover as *collectively* teaching or suggesting the "transceiver of the mobile device" that is "configured to output voice call signals in the first state and to output RFID signals in the second state," as recited in claim 1. Under MPEP 2111.01, the words of a claim must be given their plain meaning. The Examiner's interpretation of "a transceiver" disregards this requirement. At the time the instant application was filed, a person having ordinary skill in the art would have understood "a transceiver of a mobile communication device" to be a transmitter and receiver combined in a single package/housing/unit and sharing at least some common circuitry for both transmission and reception located within a mobile communication device.

At a minimum, radio frequency component 19 (a conventional transmitter and receiver within a cell phone) does not appear to share common circuitry for both transmission and reception with RFID transponder 110 (a separate transponder embedded in a removable cover). On the contrary, Zalewski discloses that the transponder can transmit and receive while the mobile station in passive mode or powered down (*see e.g.,* Fig. 5A and col. 12, lines 33-39). A person having ordinary skill in the art would understand a "passive mode" to be a mode in which the cell phone does not transmit or receive (*see e.g.,* col. 11, lines 58-62; SMS messages may be received by a server while mobile station is in passive mode and sent after mobile station is back in active mode). Transmission/reception by the transponder while the mobile station in passive mode or powered down suggests that the RFID transponder 110 and radio frequency component 19 do not share common circuitry for both transmission and reception. Therefore, when the words of claim 1 are given their plain meaning as required by law, these components cannot be collectively interpreted as "a transceiver" that is "configured to output voice call signals in the first state and to output RFID signals in the second state" as recited in claim 1.

The Examiner conceded that "Zalewski is silent to switching modes of a transceiver" (Final Office Action, pg. 3). However, the Examiner also asserted that "switching between elements to switch modes broadly reads on the claim" and that "separate outputs of a shared device, with shared processing, can broadly be interpreted as switching modes of the transceiver, as both wireless outputs are tied/linked/controlled by the same central processing/circuitry" (Final Office Action, pg. 4). As discussed above, the interpretation of transponder 110 and the radio frequency component 19 as collectively disclosed by Zalewski do not collectively teach or suggest "a transceiver" that is "configured to output voice call signals in the first state and to output RFID signals in the second state." Thus, even if Zalewski could be said to teach or suggest switching between modes of operation involving a transponder and a conventional cell phone transmitter and receiver, Zalewski still does not teach or suggest switching "a transceiver" that is "of the mobile communications device" from a first state (in which the transceiver is configured to output voice call signals) to a second state (in which the transceiver is configured to output RFID signals) as recited in claim 1.

The Examiner asserted on page 11 of the Final Office Action that the drawings of the instant application were viewed as illustrating that "RFID and voice circuitry can be separate hardware/software" and that claimed "separate signal processing section" can be interpreted as "2 transceivers." Applicants respectfully disagree, and submit that the Examiner's reading of the description mischaracterizes Applicants' teaching. Figure 1 clearly shows that the hardware/software elements employed to implement the functions of voice call ***overlapping with*** the hardware/software elements employed for RFID emulation, indicating two functions in one component sharing common circuitry/software. The accompanying description of these components states that "As depicted in Fig. 1, blocks 104 and 106 "intersect" with one another. The "intersection" represents the fact that in preferred embodiments of the present invention, substantial portions of the hardware and/or software elements employed to provide a RFID, **are the same elements** employed to facilitate the primary function of device 102, i. e. to facilitate a user in communicating with another user of another communication device" (emphasis ours).

In addition, Applicants clearly disclose, in Figs. 3 and 4 and the accompanying description, a single transceiver 308 that *includes* high frequency signal processing 410 (voice

calls), low frequency signal processing 408 (RFID signals), and a switch 404 that switches between them (pg. 11, line 19 to pg. 12, line 20). A person having ordinary skill in the art would understand Applicants' disclosure as describing a single transceiver that can be switched from a first state in which it transmits voice call signals to a second state in which it transmits RFID signals.

On page 12 of the Final Office Action, the Examiner also asserted that "the mobile device itself can be broadly interpreted to function as a transceiver via the internal components, and therefore . . . the internals of the device for communication can be interpreted as the transceiver of the device." Applicants respectfully disagree. As discussed above, this interpretation is contrary to the plain meaning of the phrase "a transceiver of a mobile communication device" that is "configured to output voice call signals in the first state and to output RFID signals in the second state."

Thus, Zalewski does not teach or suggest the features of claim 1.

In addition, "the omission of an element and retention of its function is an indicia of unobviousness" (MPEP 2144.04, citing *In re Edge*, 359 F.2d 896, 149 USPQ 556 (CCPA 1966)). While Zalewski teaches an apparatus that requires a conventional mobile phone transmitter and receiver to transmit voice call signals and a RFID transponder in a removable cover to transmit RFID signals, while claim 1 recites "a transceiver of a mobile communication device" that is configured with multi-state operations to perform both of those functions. Therefore, this weighs against a determination of obviousness.

Finally, on page 2 of the Final Office Action, the Examiner alleged that "Such disclosure of a radio frequency component 18 teaches a component of a mobile communication device to output a first data, and the component being also equipped to facilitate a user in communicating with a user of another communication device, with the communication being facilitated at least in part over a wireless network." The Examiner cited col. 16, lines 35-42 (the hotel reservation example) for teaching "facilitating a user in providing an instruction to a component of a mobile communication device to output a first data" (pg. 2, Final Office Action).

On page 3, the Examiner cited the hotel reservation example described in col. 16, lines 42-47 for teaching "the output emulating output of the first data by an active RFID transponder . . . ." While Applicants respectfully disagree with these assertions, they will not be discussed further because they are directed to language that is not currently recited in claim 1.

Therefore, for at least the above reasons, claim 1 is allowable over Zalewski under 35 U.S.C. § 103.

Claim 13 is directed to a method for providing a RFID and includes recitations substantially similar to those of claim 1. Claim 13 recites, in part, "monitoring for proximal presence of a RFID reader by a mobile communication device, ***the mobile communication device having a transceiver configured to output a RFID signal to the RFID reader, the transceiver being also configured to output a voice call signal for transmission at least in part over a wireless network*** . . . ." As discussed above with regard to claim 1, Zalewski fails to teach or suggest a single transceiver that is configured to output a RFID signal and is also configured to output a voice call signal as claimed.

Therefore, for at least the same or similar reasons discussed above with regard to claim 1, claim 13 is also allowable over Zalewski under 35 U.S.C. § 103.

Claim 21 is directed to a mobile communication device comprising, in part, "a transmitter configured to transmit a radio frequency signal, . . . ***the transmitter being operated to switch between the first and second signal processing sections to selectively*** (a) ***output a first data as a RFID signal*** in a format employed by a RFID reader, in response to a user instruction, ***and*** (b) ***output a voice call signal*** for transmission over a wireless network . . . ."

Claim 33 is directed to a mobile communication device comprising, in part, "***a transmitter configured to transmit a voice call signal in a first operational state and a RFID signal in a second operational state***; a storage medium to store a first data and ***instructions to switch the transmitter between the first and second operational states*** . . . ."

Therefore, claims 21 and 23 require "a switchable transmitter of a mobile communication device" that is configured to be switched between first and second signal processing sections (claim 21) or operational states (claim 33) to output a voice call signal (first

processing section/operational state) or a RFID signal (second processing section/operational state). As discussed above with regard to claim 1, Zalewski does not teach or suggest the "transmitter of a mobile communication device" of claims 21 and 33. Moreover, the mobile communication devices of claims 21 and 33 omit the embedded transponder in the removable cover while retaining its function. This weighs against a finding of obviousness.

Therefore, claims 21 and 33 are also allowable over Zalewski under 35 U.S.C. § 103.

2. Claims 2-12, 14-20, 22-32, and 34-40 are allowable over Zalewski under 35 U.S.C. § 103.

"If an independent claim is nonobvious under 35 U.S.C. 103, then any claim depending therefrom is nonobvious." MPEP 2143.03, citing *In re Fine*, 837 F.2d 1071, 5 USPQ2d 1596 (Fed. Cir. 1988). Claims 2-12, 14-20, 22-32, and 34-40 depend from claim 1, 13, 21, or 33, respectively, incorporating the limitations of their base claim(s). Therefore, claims 2-12, 14-20, 22-32, and 34-40 are allowable over Zalewski under 35 U.S.C. § 103. These claims are also allowable over Zalewski under 35 U.S.C. § 103 by virtue of their additional recitations, which are not taught or suggested by Zalewski.

B. Claims 1-40 are allowable under 35 U.S.C. § 103 over Zalewski in view of Perttila.

On page 6 of the Final Office Action, claims 1-40 were rejected under 35 U.S.C. § 103 as being allegedly unpatentable over Zalewski in view of Perttila. Applicants respectfully submit that the rejections are improper and should be withdrawn for at least the reasons discussed below.

1. Claims 1, 13, 21, and 33 are allowable over Zalewski in view of Perttila under 35 U.S.C. § 103.

Zalewski was cited as discussed above for teaching or suggesting most of the features of claim 1. The Examiner conceded that "Zalewski is silent to explicitly reciting changing a transceiver mode/sharing a transceiver" (Final Office Action, pg. 8). Paragraph [0116] of Perttila was then cited for teaching "such limitations" (Final Office Action, pg. 8).

Applicants respectfully disagree with the Examiner's characterization of Zalewski as teaching the "transceiver" of claims 1 and 13 or the "transmitter" of claims 21 and 33, which are both "of a mobile communication device," as discussed above.

Perttila fails to remedy the deficiencies of Zalewski.

Perttila discloses a mobile device with an RFID reader. RFID tags are activated by radio frequency waves emitted by the mobile terminal and transmit information to the RFID reader (paragraph 0023]). The RFID reader can use the information to direct the mobile terminal to perform an action (paragraph [0027]).

In the cited paragraph, Perttila discloses a mobile computing arrangement 900 with an RFID reader device 930. The RFID reader device 930 further includes a transceiver 932 and an antenna 934. Mobile computing arrangement 900 also includes a transceiver 922 coupled to an antenna 924 (paragraph [0115]). Perttila discloses in paragraph [0116] that:

> "It should be recognized that the transceiver 922 used to establish wireless connections between the mobile device and the network can be used as the transceiver 932 associated with the RFID reader 930. However, because the transmissions performed with the network are high-frequency signals relative to the RF signals used in connection with the RFID reader 930, ***it may not be practical or possible to share the transceiver***, although it is possible in some implementations."

The Examiner asserted this passage for teaching that a mobile device transceiver "can be used for voice (to connect the mobile device to the network) as well as to connect to the RFID reader" (Final Office Action, pg. 8). Similarly, the Examiner asserted on page 11 that Perttila teaches "sharing a common transceiver." Applicants respectfully disagree.

First, Perttila stated that "it may not be practical or possible to share the transceiver, although it is possible in some implementations." Applicant submits that in this passage, Perttila actually discourages or teaches away from combining voice and RFID circuitry as being potentially not "<u>practical or possible</u>."

Second, Applicants note that "[t]o render a later invention unpatentable for obviousness, the prior art must enable a person of ordinary skill in the field to make and use the later invention." *In re Kumar*, 418 F.3d 1361, 1369 (Fed. Cir. 2005). Even assuming, hypothetically and arguendo, that Perttila does not teach away from combining voice and RFID

circuitry, Perttila still does not provide any teaching or suggestion as to how the combination could be implemented with a single transceiver. A person having ordinary skill in the art would not have been enabled by the disclosure of Perttila to make and use the "transceiver" as recited in claims 1 and 13 or the "transmitter" as recited in claims 21 and 33.

Even if the above passage could be read to fairly teach or suggest "sharing a common transceiver" (Applicants do not concede this), Perttila merely suggests – at most – using a shared transceiver for voice call functions and RFID reader functions. The RFID reader and RFID tag/transponder are not analogous – one reads the other. Therefore, Perttila does not teach or suggest a single transceiver (claims 1 and 13) or transmitter (claims 21 and 33), both of a mobile communication device, configured to perform voice call functions and RFID *transponder/tag* functions (i.e., outputting data as a radio frequency signal ***to*** a RFID reader).

Finally, a person having ordinary skill in the art would lack motivation to combine the disclosures of Zalewski and Perttila in the suggested manner. Zalewski teaches a removable mobile device *cover* with an embedded RFID *transponder*, while Perttila teaches a mobile device with an embedded RFID *reader*. And neither reference, alone or in combination, teaches a single transceiver or transmitter that can be switched from outputting a voice call signal to outputting data/RFID signals to a RFID reader. Therefore, even if the Examiner's reading of Perttila is correct and Perttila could be interpreted as enabling "sharing a common transceiver" among voice call functions and RFID reader functions (Applicants do not concede this), the suggested combination of Zalewski and Perttila still does not suggest the recitations of claims 1, 13, 21, and 33.

Therefore, claims 1, 13, 21, and 33 are allowable over Zalewski and Perttila under 35 U.S.C. § 103.

2. Claims 2-12, 14-20, 22-32, and 34-40 are allowable over Zalewski and Perttila under 35 U.S.C. § 103.

Claims 2-12, 14-20, 22-32, and 34-40 depend from claim 1, 13, 21, or 33, respectively, incorporating the limitations of their base claim(s). Therefore, claims 2-12, 14-20, 22-32, and 34-40 are allowable over Zalewski and Perttila under 35 U.S.C. § 103. These claims

are also allowable over Zalewski under 35 U.S.C. § 103 by virtue of their additional recitations, which are not taught or suggested by Zalewski and Perttila.

In view of the arguments as set forth above, the Examiner's rejections of the claims should be withdrawn.

Respectfully submitted,
Schwabe, Williamson & Wyatt

/Jo Ann Schmidt/
Jo Ann Schmidt
Registration No. 62,255

JOA: joa

1420 Fifth Avenue, Suite 3400
Seattle, Washington 98101
Phone: (206) 407-1569
Fax: (206) 292-0460

VIII. CLAIMS APPENDIX

In accordance with 37 CFR 41.37(c)(1)(viii), provided herewith is an appendix containing a copy of the "claims involved in the appeal," which are claims 1-40. It is noted that canceled claims 41-60 are not "involved in the appeal," and therefore 37 CFR 41.37(c)(1)(viii) does not require a copy of these canceled claims to be included below:

1. (Previously Presented) A method for providing a radio frequency identification (RFID) comprising:

receiving, by a mobile communications device, an instruction to transmit a first data to a RFID reader;

switching a transceiver of the mobile communications device from a first state to a second state, the transceiver configured to output voice call signals in the first state and to output RFID signals in the second state; and

outputting the first data by the transceiver in the second state, the transceiver outputting the first data as a radio frequency signal in a format employed by the RFID reader.

2. (Previously Presented) The method of claim 1, wherein said transceiver comprises a first signal processing unit configured to process voice call signals and a second signal processing unit configured to process RFID signals, said switching comprising coupling the second signal processing unit to a transmission path of the transceiver.

3. (Previously Presented) The method of claim 1, wherein said first data comprises a selected one of a security key and an identifier.

4. (Previously Presented) The method of claim 3, wherein said security key comprises a selected one of a garage door key, an exterior door key, an interior door key, and a motor vehicle door key.

5. (Previously Presented) The method of claim 1, wherein said first data comprises an identifier, and said identifier comprises a selected one of a social security number, a driver's license number, an affinity program account number, and a credit card number.

6. (Original) The method of claim 1, wherein the method further comprises facilitating the user in selecting the first data from a plurality of data using the mobile communication device.

7. (Original) The method of claim 1, wherein the method further comprises facilitating provision of the first data to the mobile communication device.

8. (Previously Presented) The method of claim 7, wherein said facilitating of the provisioning of the data to the mobile communication device includes facilitating provision of at least a signaling attribute associated with the outputting of the data in the format employed by the RFID reader.

9. (Previously Presented) The method of claim 1, wherein the method further comprises:

monitoring for proximal presence of the RFID reader by the mobile communication device; and

on detection of the RFID reader by the mobile communication device, outputting by the transceiver a second data as a second radio frequency signal, the outputting emulating output of the second data by a RFID transponder of a passive type.

10. (Previously Presented) The method of claim 9, wherein said monitoring comprises sensing for a probing radio frequency signal of the RFID reader by the mobile communication device.

11. (Original) The method of claim 9, wherein said first and second data are the same data.

12. (Original) The method of claim 1, wherein the mobile communication device is a selected one of a wireless mobile phone and a personal digital assistant equipped with communication capability.

13. (Previously Presented) A method for providing a radio frequency identifier (RFID), comprising:

monitoring for proximal presence of a RFID reader by a mobile communication device, the mobile communication device having a transceiver configured to output a RFID signal to the RFID reader, the transceiver being also configured to output a voice call signal for transmission at least in part over a wireless network; and

on detection of the RFID reader, outputting by the transceiver a data as a radio frequency signal in a format employed by the RFID reader.

14. (Previously Presented) The method of claim 13, wherein said monitoring comprises sensing for a probing radio frequency signal of the RFID reader by the mobile communication device.

15. (Original) The method of claim 13, wherein said data comprises a security key.

16. (Original) The method of claim 15, wherein said security key comprises a door key.

17. (Original) The method of claim 16, wherein said door key comprises a selected one of a garage door key, an exterior door key, an interior door key, and a motor vehicle door key.

18. (Original) The method of claim 13, wherein the method further comprises facilitating provision of the data to the mobile communication device.

19. (Previously Presented) The method of claim 18, wherein said facilitating of the provisioning of the data to the mobile communication device includes facilitating provision of at least a signaling attribute associated with the outputting of the data in the format employed by the RFID reader.

20. (Original) The method of claim 13, wherein the mobile communication device is a selected of a wireless mobile phone and a personal digital assistant equipped with communication capability.

21. (Previously Presented) A mobile communication device comprising:

a transmitter configured to transmit a radio frequency signal, the transmitter comprising a first signal processing section and a second signal processing section, the first signal processing section configured to output voice call signals in a first radio frequency range and the second signal processing section configured to output RFID signals in a second radio frequency range;

a storage medium to store a first data and instructions to operate the transmitter, the transmitter being operated to switch between the first and second signal processing sections to selectively (a) output a first data as a RFID signal in a format employed by a RFID reader, in response to a user instruction, and (b) output a voice call signal for transmission over a wireless network; and

a processor coupled to the transmitter and the storage to execute the instructions.

22. (Original) The device of claim 21, wherein said first data comprises a selected one of a security key and an identifier.

23. (Original) The device of claim 22, wherein said first data comprises a security key, and said security key comprises a door key.

24. (Original) The device of claim 23, wherein said door key comprises a selected one of a garage door key, an exterior door key, an interior door key, and a motor vehicle door key.

25. (Original) The device of claim 22, wherein said first data comprises an identifier, and said identifier comprises a selected one of a social security number, a driver's license number, an affinity program account number, and a credit card number.

26. (Original) The device of claim 21, wherein the instructions are further designed to facilitate the user in selecting the first data from a plurality of data, and instructing said output.

27. (Original) The device of claim 21, wherein the instructions are further designed to facilitate provision of the first data to the mobile communication device.

28. (Original) The device of claim 27, wherein the instructions are further designed to include with said facilitating, provisioning of at least a signaling attribute associated with the outputting of the first data in the form of a radio frequency signal.

29. (Previously Presented) The device of claim 21, wherein the instructions are further designed to

monitor for proximal presence of the RFID reader; and

on detection of the RFID reader, operate the transceiver to output a second data as a second RFID signal.

30. (Original) The device of claim 29, wherein the instructions are further designed to sense for a probing radio frequency signal of the RFID reader.

31. (Original) The device of claim 29, wherein said first and second data are the same data.

32. (Previously Presented) The device of claim 21, wherein the mobile communication device is a selected one of a wireless mobile phone and a personal digital assistant equipped with communication capability.

33. (Previously Presented) A mobile communication device comprising:

a transmitter configured to transmit a voice call signal in a first operational state and a RFID signal in a second operational state;

a storage medium to store a first data and instructions to switch the transmitter between the first and second operational states to selectively (a) monitor for proximal presence of a radio frequency identifier (RFID) reader, and on detection of a RFID reader, output a data as a RFID signal in a format employed by the RFID reader, and (b) transmit a voice call signal to another user of another communication device at least in part over a wireless network; and

a processor coupled to the transmitter and the storage to execute the instructions.

34. (Original) The device of claim 33, wherein said instructions are further designed to sense for a probing radio frequency signal of the RFID reader.

35. (Original) The device of claim 33, wherein said data comprises a security key.

36. (Original) The device of claim 35, wherein said security key comprises a door key.

37. (Original) The device of claim 36, wherein said door key comprises a selected one of a garage door key, an exterior door key, an interior door key, and a motor vehicle door key.

38. (Original) The device of claim 33, wherein the instructions are further designed to facilitate provision of the data to the mobile communication device.

39. (Original) The device of claim 38, wherein the instructions are further designed to include with said facilitating, provisioning of at least a signaling attribute associated with the outputting of the data in the form of a radio frequency signal.

40. (Original) The device of claim 33, wherein the mobile communication device is a selected of a wireless mobile phone and a personal digital assistant equipped with communication capability.

IX. EVIDENCE APPENDIX

None.

X. RELATED PROCEEDINGS APPENDIX

None.

Electronic Patent Application Fee Transmittal

Application Number:	10560262
Filing Date:	09-Dec-2005
Title of Invention:	Emulated radio frequency identification
First Named Inventor/Applicant Name:	Peter Zatloukal
Filer:	Jo Ann Schmidt/Jessica Rose
Attorney Docket Number:	120083-146181

Filed as Small Entity

U.S. National Stage under 35 USC 371 Filing Fees

Description	Fee Code	Quantity	Amount	Sub-Total in USD($)
Basic Filing:				
Pages:				
Claims:				
Miscellaneous-Filing:				
Petition:				
Patent-Appeals-and-Interference:				
Filing a brief in support of an appeal	2402	1	270	270
Post-Allowance-and-Post-Issuance:				
Extension-of-Time:				

Description	Fee Code	Quantity	Amount	Sub-Total in USD($)
Miscellaneous:				
			Total in USD ($)	**270**

Electronic Acknowledgement Receipt

EFS ID:	9090659
Application Number:	10560262
International Application Number:	
Confirmation Number:	3358
Title of Invention:	Emulated radio frequency identification
First Named Inventor/Applicant Name:	Peter Zatloukal
Customer Number:	60172
Filer:	Jo Ann Schmidt/Jessica Rose
Filer Authorized By:	Jo Ann Schmidt
Attorney Docket Number:	120083-146181
Receipt Date:	21-DEC-2010
Filing Date:	09-DEC-2005
Time Stamp:	19:31:26
Application Type:	U.S. National Stage under 35 USC 371

Payment information:

Submitted with Payment	yes
Payment Type	Deposit Account
Payment was successfully received in RAM	$270
RAM confirmation Number	8535
Deposit Account	500393
Authorized User	

File Listing:

Document Number	Document Description	File Name	File Size(Bytes)/ Message Digest	Multi Part /.zip	Pages (if appl.)

1	Appeal Brief Filed	120083-146181_AppealBrief_21DEC2010.pdf	155595 9b40c096a73ceab9281a885c1b1a2de1116f8e6f	no	24
Warnings:					
Information:					
2	Fee Worksheet (PTO-875)	fee-info.pdf	29963 95bc81a6467be5d414ce8139bdd4d9f5cd9593f2	no	2
Warnings:					
Information:					
			Total Files Size (in bytes):	185558	

This Acknowledgement Receipt evidences receipt on the noted date by the USPTO of the indicated documents, characterized by the applicant, and including page counts, where applicable. It serves as evidence of receipt similar to a Post Card, as described in MPEP 503.

<u>New Applications Under 35 U.S.C. 111</u>
If a new application is being filed and the application includes the necessary components for a filing date (see 37 CFR 1.53(b)-(d) and MPEP 506), a Filing Receipt (37 CFR 1.54) will be issued in due course and the date shown on this Acknowledgement Receipt will establish the filing date of the application.

<u>National Stage of an International Application under 35 U.S.C. 371</u>
If a timely submission to enter the national stage of an international application is compliant with the conditions of 35 U.S.C. 371 and other applicable requirements a Form PCT/DO/EO/903 indicating acceptance of the application as a national stage submission under 35 U.S.C. 371 will be issued in addition to the Filing Receipt, in due course.

<u>New International Application Filed with the USPTO as a Receiving Office</u>
If a new international application is being filed and the international application includes the necessary components for an international filing date (see PCT Article 11 and MPEP 1810), a Notification of the International Application Number and of the International Filing Date (Form PCT/RO/105) will be issued in due course, subject to prescriptions concerning national security, and the date shown on this Acknowledgement Receipt will establish the international filing date of the application.

PTO/SB/31 (07-09)
Approved for use through 07/31/2012. OMB 0651-0031
U.S. Patent and Trademark Office; U.S. DEPARTMENT OF COMMERCE
Under the Paperwork Reduction Act of 1995, no persons are required to respond to a collection of information unless it displays a valid OMB control number.

NOTICE OF APPEAL FROM THE EXAMINER TO THE BOARD OF PATENT APPEALS AND INTERFERENCES

Docket Number (Optional): 120083-146181

I hereby certify that this correspondence is being facsimile transmitted to the USPTO or deposited with the United States Postal Service with sufficient postage as first class mail in an envelope addressed to "Commissioner for Patents, P.O. Box 1450, Alexandria, VA 22313-1450" [37 CFR 1.8(a)]
on _____

Signature _____

Typed or printed name _____

In re Application of: Zatloukal et al.

Application Number: 10/560,262

Filed: December 9, 2005

For: EMULATED RADIO FREQUENCY IDENTIFICATION

Art Unit: 2887

Examiner: Daniel I. Walsh

Applicant hereby **appeals** to the Board of Patent Appeals and Interferences from the last decision of the examiner.

The fee for this Notice of Appeal is (37 CFR 41.20(b)(1)) $ 540

☑ Applicant claims small entity status. See 37 CFR 1.27. Therefore, the fee shown above is reduced by half, and the resulting fee is: $ 270

☐ A check in the amount of the fee is enclosed.

☐ Payment by credit card. Form PTO-2038 is attached.

☐ The Director has already been authorized to charge fees in this application to a Deposit Account.

☑ The Director is hereby authorized to charge any fees which may be required, or credit any overpayment to Deposit Account No. 500393 .

☐ A petition for an extension of time under 37 CFR 1.136(a) (PTO/SB/22) is enclosed.

WARNING: Information on this form may become public. Credit card information should not be included on this form. Provide credit card information and authorization on PTO-2038.

I am the

☐ applicant/inventor.

☐ assignee of record of the entire interest. See 37 CFR 3.71. Statement under 37 CFR 3.73(b) is enclosed. (Form PTO/SB/96)

☑ attorney or agent of record. Registration number 62255.

☐ attorney or agent acting under 37 CFR 1.34. Registration number if acting under 37 CFR 1.34. _____

/Jo Ann Schmidt/
Signature

Jo Ann Schmidt
Typed or printed name

206-622-1711
Telephone number

October 21, 2010
Date

NOTE: Signatures of all the inventors or assignees of record of the entire interest or their representative(s) are required. Submit multiple forms if more than one signature is required, see below*.

☑ *Total of 1 forms are submitted.

This collection of information is required by 37 CFR 41.31. The information is required to obtain or retain a benefit by the public which is to file (and by the USPTO to process) an application. Confidentiality is governed by 35 U.S.C. 122 and 37 CFR 1.11, 1.14 and 41.6. This collection is estimated to take 12 minutes to complete, including gathering, preparing, and submitting the completed application form to the USPTO. Time will vary depending upon the individual case. Any comments on the amount of time you require to complete this form and/or suggestions for reducing this burden, should be sent to the Chief Information Officer, U.S. Patent and Trademark Office, U.S. Department of Commerce, P.O. Box 1450, Alexandria, VA 22313-1450. DO NOT SEND FEES OR COMPLETED FORMS TO THIS ADDRESS. **SEND TO: Commissioner for Patents, P.O. Box 1450, Alexandria, VA 22313-1450.**

If you need assistance in completing the form, call 1-800-PTO-9199 and select option 2.

Privacy Act Statement

The **Privacy Act of 1974 (P.L. 93-579)** requires that you be given certain information in connection with your submission of the attached form related to a patent application or patent. Accordingly, pursuant to the requirements of the Act, please be advised that: (1) the general authority for the collection of this information is 35 U.S.C. 2(b)(2); (2) furnishing of the information solicited is voluntary; and (3) the principal purpose for which the information is used by the U.S. Patent and Trademark Office is to process and/or examine your submission related to a patent application or patent. If you do not furnish the requested information, the U.S. Patent and Trademark Office may not be able to process and/or examine your submission, which may result in termination of proceedings or abandonment of the application or expiration of the patent.

The information provided by you in this form will be subject to the following routine uses:

1. The information on this form will be treated confidentially to the extent allowed under the Freedom of Information Act (5 U.S.C. 552) and the Privacy Act (5 U.S.C 552a). Records from this system of records may be disclosed to the Department of Justice to determine whether disclosure of these records is required by the Freedom of Information Act.
2. A record from this system of records may be disclosed, as a routine use, in the course of presenting evidence to a court, magistrate, or administrative tribunal, including disclosures to opposing counsel in the course of settlement negotiations.
3. A record in this system of records may be disclosed, as a routine use, to a Member of Congress submitting a request involving an individual, to whom the record pertains, when the individual has requested assistance from the Member with respect to the subject matter of the record.
4. A record in this system of records may be disclosed, as a routine use, to a contractor of the Agency having need for the information in order to perform a contract. Recipients of information shall be required to comply with the requirements of the Privacy Act of 1974, as amended, pursuant to 5 U.S.C. 552a(m).
5. A record related to an International Application filed under the Patent Cooperation Treaty in this system of records may be disclosed, as a routine use, to the International Bureau of the World Intellectual Property Organization, pursuant to the Patent Cooperation Treaty.
6. A record in this system of records may be disclosed, as a routine use, to another federal agency for purposes of National Security review (35 U.S.C. 181) and for review pursuant to the Atomic Energy Act (42 U.S.C. 218(c)).
7. A record from this system of records may be disclosed, as a routine use, to the Administrator, General Services, or his/her designee, during an inspection of records conducted by GSA as part of that agency's responsibility to recommend improvements in records management practices and programs, under authority of 44 U.S.C. 2904 and 2906. Such disclosure shall be made in accordance with the GSA regulations governing inspection of records for this purpose, and any other relevant (*i.e.*, GSA or Commerce) directive. Such disclosure shall not be used to make determinations about individuals.
8. A record from this system of records may be disclosed, as a routine use, to the public after either publication of the application pursuant to 35 U.S.C. 122(b) or issuance of a patent pursuant to 35 U.S.C. 151. Further, a record may be disclosed, subject to the limitations of 37 CFR 1.14, as a routine use, to the public if the record was filed in an application which became abandoned or in which the proceedings were terminated and which application is referenced by either a published application, an application open to public inspection or an issued patent.
9. A record from this system of records may be disclosed, as a routine use, to a Federal, State, or local law enforcement agency, if the USPTO becomes aware of a violation or potential violation of law or regulation.

PTO/SB/22 (07-09)
Approved for use through 07/31/2012. OMB 0651-0031
U.S. Patent and Trademark Office; U.S. DEPARMENT OF COMMERCE
Under the paperwork Reduction Act of 1995, no persons are required to respond to a collection of information unless it displays a valid OMB control number.

PETITION FOR EXTENSION OF TIME UNDER 37 CFR 1.136(a) **FY 2009** ***(Fees pursuant to the Consolidated Appropriations Act, 2005 (H.R. 4818).)***	Docket Number (Optional) 120083-146181
Application Number 10/560,262	Filed December 9, 2005
For EMULATED RADIO FREQUENCY IDENTIFICATION	
Art Unit 2887	Examiner Daniel I. Walsh

This is a request under the provisions of 37 CFR 1.136(a) to extend the period for filing a reply in the above identified application.

The requested extension and fee are as follows (check time period desired and enter the appropriate fee below):

		Fee	Small Entity Fee	
☑	One month (37 CFR 1.17(a)(1))	$130	$65	$ 65
☐	Two months (37 CFR 1.17(a)(2))	$490	$245	$
☐	Three months (37 CFR 1.17(a)(3))	$1110	$555	$
☐	Four months (37 CFR 1.17(a)(4))	$1730	$865	$
☐	Five months (37 CFR 1.17(a)(5))	$2350	$1175	$

☑ Applicant claims small entity status. See 37 CFR 1.27.

☐ A check in the amount of the fee is enclosed.

☐ Payment by credit card. Form PTO-2038 is attached.

☐ The Director has already been authorized to charge fees in this application to a Deposit Account.

☑ The Director is hereby authorized to charge any fees which may be required, or credit any overpayment, to Deposit Account Number 500393.

WARNING: Information on this form may become public. Credit card information should not be included on this form. Provide credit card information and authorization on PTO-2038.

I am the

☐ applicant/inventor.

☐ assignee of record of the entire interest. See 37 CFR 3.71.
Statement under 37 CFR 3.73(b) is enclosed (Form PTO/SB/96).

☑ attorney or agent of record. Registration Number 62255

☐ attorney or agent under 37 CFR 1.34.
Registration number if acting under 37 CFR 1.34 _____

/Jo Ann Schmidt/ — Signature

October 21, 2010 — Date

Jo Ann Schmidt — Typed or printed name

206-622-1711 — Telephone Number

NOTE: Signatures of all the inventors or assignees of record of the entire interest or their representative(s) are required. Submit multiple forms if more than one signature is required, see below.

☑ Total of 1 forms are submitted.

This collection of information is required by 37 CFR 1.136(a). The information is required to obtain or retain a benefit by the public which is to file (and by the USPTO to process) an application. Confidentiality is governed by 35 U.S.C. 122 and 37 CFR 1.11 and 1.14. This collection is estimated to take 6 minutes to complete, including gathering, preparing, and submitting the completed application form to the USPTO. Time will vary depending upon the individual case. Any comments on the amount of time you require to complete this form and/or suggestions for reducing this burden, should be sent to the Chief Information Officer, U.S. Patent and Trademark Office, U.S. Department of Commerce, P.O. Box 1450, Alexandria, VA 22313-1450. DO NOT SEND FEES OR COMPLETED FORMS TO THIS ADDRESS. **SEND TO: Commissioner for Patents, P.O. Box 1450, Alexandria, VA 22313-1450.**

If you need assistance in completing the form, call 1-800-PTO-9199 and select option 2.

Privacy Act Statement

The Privacy Act of 1974 (P.L. 93-579) requires that you be given certain information in connection with your submission of the attached form related to a patent application or patent. Accordingly, pursuant to the requirements of the Act, please be advised that: (1) the general authority for the collection of this information is 35 U.S.C. 2(b)(2); (2) furnishing of the information solicited is voluntary; and (3) the principal purpose for which the information is used by the U.S. Patent and Trademark Office is to process and/or examine your submission related to a patent application or patent. If you do not furnish the requested information, the U.S. Patent and Trademark Office may not be able to process and/or examine your submission, which may result in termination of proceedings or abandonment of the application or expiration of the patent.

The information provided by you in this form will be subject to the following routine uses:

1. The information on this form will be treated confidentially to the extent allowed under the Freedom of Information Act (5 U.S.C. 552) and the Privacy Act (5 U.S.C 552a). Records from this system of records may be disclosed to the Department of Justice to determine whether disclosure of these records is required by the Freedom of Information Act.
2. A record from this system of records may be disclosed, as a routine use, in the course of presenting evidence to a court, magistrate, or administrative tribunal, including disclosures to opposing counsel in the course of settlement negotiations.
3. A record in this system of records may be disclosed, as a routine use, to a Member of Congress submitting a request involving an individual, to whom the record pertains, when the individual has requested assistance from the Member with respect to the subject matter of the record.
4. A record in this system of records may be disclosed, as a routine use, to a contractor of the Agency having need for the information in order to perform a contract. Recipients of information shall be required to comply with the requirements of the Privacy Act of 1974, as amended, pursuant to 5 U.S.C. 552a(m).
5. A record related to an International Application filed under the Patent Cooperation Treaty in this system of records may be disclosed, as a routine use, to the International Bureau of the World Intellectual Property Organization, pursuant to the Patent Cooperation Treaty.
6. A record in this system of records may be disclosed, as a routine use, to another federal agency for purposes of National Security review (35 U.S.C. 181) and for review pursuant to the Atomic Energy Act (42 U.S.C. 218(c)).
7. A record from this system of records may be disclosed, as a routine use, to the Administrator, General Services, or his/her designee, during an inspection of records conducted by GSA as part of that agency's responsibility to recommend improvements in records management practices and programs, under authority of 44 U.S.C. 2904 and 2906. Such disclosure shall be made in accordance with the GSA regulations governing inspection of records for this purpose, and any other relevant (i.e., GSA or Commerce) directive. Such disclosure shall not be used to make determinations about individuals.
8. A record from this system of records may be disclosed, as a routine use, to the public after either publication of the application pursuant to 35 U.S.C. 122(b) or issuance of a patent pursuant to 35 U.S.C. 151. Further, a record may be disclosed, subject to the limitations of 37 CFR 1.14, as a routine use, to the public if the record was filed in an application which became abandoned or in which the proceedings were terminated and which application is referenced by either a published application, an application open to public inspection or an issued patent.
9. A record from this system of records may be disclosed, as a routine use, to a Federal, State, or local law enforcement agency, if the USPTO becomes aware of a violation or potential violation of law or regulation.

Electronic Patent Application Fee Transmittal

Application Number:	10560262
Filing Date:	09-Dec-2005
Title of Invention:	Emulated radio frequency identification
First Named Inventor/Applicant Name:	Peter Zatloukal
Filer:	Jo Ann Schmidt/Allyson Dahmen
Attorney Docket Number:	120083-146181

Filed as Small Entity

U.S. National Stage under 35 USC 371 Filing Fees

Description	Fee Code	Quantity	Amount	Sub-Total in USD($)
Basic Filing:				
Pages:				
Claims:				
Miscellaneous-Filing:				
Petition:				
Patent-Appeals-and-Interference:				
Notice of appeal	2401	1	270	270
Post-Allowance-and-Post-Issuance:				
Extension-of-Time:				

Description	Fee Code	Quantity	Amount	Sub-Total in USD($)
Extension - 1 month with $0 paid	2251	1	65	65
Miscellaneous:				
			Total in USD ($)	**335**

Electronic Acknowledgement Receipt	
EFS ID:	8677382
Application Number:	10560262
International Application Number:	
Confirmation Number:	3358
Title of Invention:	Emulated radio frequency identification
First Named Inventor/Applicant Name:	Peter Zatloukal
Customer Number:	60172
Filer:	Jo Ann Schmidt/Allyson Dahmen
Filer Authorized By:	Jo Ann Schmidt
Attorney Docket Number:	120083-146181
Receipt Date:	21-OCT-2010
Filing Date:	09-DEC-2005
Time Stamp:	18:53:06
Application Type:	U.S. National Stage under 35 USC 371

Payment information:

Submitted with Payment	yes
Payment Type	Deposit Account
Payment was successfully received in RAM	$335
RAM confirmation Number	6755
Deposit Account	500393
Authorized User	
The Director of the USPTO is hereby authorized to charge indicated fees and credit any overpayment as follows: Charge any Additional Fees required under 37 C.F.R. Section 1.21 (Miscellaneous fees and charges)	

File Listing:

Document Number	Document Description	File Name	File Size(Bytes)/ Message Digest	Multi Part /.zip	Pages (if appl.)
1	Notice of Appeal Filed	Varia_P064_NtcofAppeal.pdf	246169 309a813194e516f5bc605400ccbcc57f3944971d	no	2
Warnings:					
Information:					
2	Extension of Time	Varia_P064_EOT.pdf	315108 b660660e28576a4e717b33afaec2b19e91966d0d	no	2
Warnings:					
Information:					
3	Fee Worksheet (PTO-875)	fee-info.pdf	31538 644357998cf3b21761ab44a12b95151153e6eb01	no	2
Warnings:					
Information:					
		Total Files Size (in bytes):	592815		

This Acknowledgement Receipt evidences receipt on the noted date by the USPTO of the indicated documents, characterized by the applicant, and including page counts, where applicable. It serves as evidence of receipt similar to a Post Card, as described in MPEP 503.

<u>New Applications Under 35 U.S.C. 111</u>
If a new application is being filed and the application includes the necessary components for a filing date (see 37 CFR 1.53(b)-(d) and MPEP 506), a Filing Receipt (37 CFR 1.54) will be issued in due course and the date shown on this Acknowledgement Receipt will establish the filing date of the application.

<u>National Stage of an International Application under 35 U.S.C. 371</u>
If a timely submission to enter the national stage of an international application is compliant with the conditions of 35 U.S.C. 371 and other applicable requirements a Form PCT/DO/EO/903 indicating acceptance of the application as a national stage submission under 35 U.S.C. 371 will be issued in addition to the Filing Receipt, in due course.

<u>New International Application Filed with the USPTO as a Receiving Office</u>
If a new international application is being filed and the international application includes the necessary components for an international filing date (see PCT Article 11 and MPEP 1810), a Notification of the International Application Number and of the International Filing Date (Form PCT/RO/105) will be issued in due course, subject to prescriptions concerning national security, and the date shown on this Acknowledgement Receipt will establish the international filing date of the application.

UNITED STATES PATENT AND TRADEMARK OFFICE

UNITED STATES DEPARTMENT OF COMMERCE
United States Patent and Trademark Office
Address: COMMISSIONER FOR PATENTS
P.O. Box 1450
Alexandria, Virginia 22313-1450
www.uspto.gov

APPLICATION NO.	FILING DATE	FIRST NAMED INVENTOR	ATTORNEY DOCKET NO.	CONFIRMATION NO.
10/560,262	12/09/2005	Peter Zatloukal	120083-146181	3358

60172 7590 10/13/2010
SCHWABE, WILLIAMSON & WYATT, P.C.
1420 FIFTH, SUITE 3400
SEATTLE, WA 98101-4010

EXAMINER
WALSH, DANIEL I

ART UNIT	PAPER NUMBER
2887	

MAIL DATE	DELIVERY MODE
10/13/2010	PAPER

Please find below and/or attached an Office communication concerning this application or proceeding.

The time period for reply, if any, is set in the attached communication.

PTOL-90A (Rev. 04/07)

Advisory Action Before the Filing of an Appeal Brief	Application No.	Applicant(s)	
	10/560,262	ZATLOUKAL ET AL.	
	Examiner	**Art Unit**	
	DANIEL WALSH	2887	

--The MAILING DATE of this communication appears on the cover sheet with the correspondence address --

THE REPLY FILED 12 September 2010 FAILS TO PLACE THIS APPLICATION IN CONDITION FOR ALLOWANCE.

1. ☒ The reply was filed after a final rejection, but prior to or on the same day as filing a Notice of Appeal. To avoid abandonment of this application, applicant must timely file one of the following replies: (1) an amendment, affidavit, or other evidence, which places the application in condition for allowance; (2) a Notice of Appeal (with appeal fee) in compliance with 37 CFR 41.31; or (3) a Request for Continued Examination (RCE) in compliance with 37 CFR 1.114. The reply must be filed within one of the following time periods:
   a) ☒ The period for reply expires *3* months from the mailing date of the final rejection.
   b) ☐ The period for reply expires on: (1) the mailing date of this Advisory Action, or (2) the date set forth in the final rejection, whichever is later. In no event, however, will the statutory period for reply expire later than SIX MONTHS from the mailing date of the final rejection.
   Examiner Note: If box 1 is checked, check either box (a) or (b). ONLY CHECK BOX (b) WHEN THE FIRST REPLY WAS FILED WITHIN TWO MONTHS OF THE FINAL REJECTION. See MPEP 706.07(f).

Extensions of time may be obtained under 37 CFR 1.136(a). The date on which the petition under 37 CFR 1.136(a) and the appropriate extension fee have been filed is the date for purposes of determining the period of extension and the corresponding amount of the fee. The appropriate extension fee under 37 CFR 1.17(a) is calculated from: (1) the expiration date of the shortened statutory period for reply originally set in the final Office action; or (2) as set forth in (b) above, if checked. Any reply received by the Office later than three months after the mailing date of the final rejection, even if timely filed, may reduce any earned patent term adjustment. See 37 CFR 1.704(b).

NOTICE OF APPEAL

2. ☐ The Notice of Appeal was filed on _____. A brief in compliance with 37 CFR 41.37 must be filed within two months of the date of filing the Notice of Appeal (37 CFR 41.37(a)), or any extension thereof (37 CFR 41.37(e)), to avoid dismissal of the appeal. Since a Notice of Appeal has been filed, any reply must be filed within the time period set forth in 37 CFR 41.37(a).

AMENDMENTS

3. ☒ The proposed amendment(s) filed after a final rejection, but prior to the date of filing a brief, will not be entered because
   (a) ☐ They raise new issues that would require further consideration and/or search (see NOTE below);
   (b) ☐ They raise the issue of new matter (see NOTE below);
   (c) ☒ They are not deemed to place the application in better form for appeal by materially reducing or simplifying the issues for appeal; and/or
   (d) ☐ They present additional claims without canceling a corresponding number of finally rejected claims.
   NOTE: _____. (See 37 CFR 1.116 and 41.33(a)).
4. ☐ The amendments are not in compliance with 37 CFR 1.121. See attached Notice of Non-Compliant Amendment (PTOL-324).
5. ☐ Applicant's reply has overcome the following rejection(s): _____.
6. ☐ Newly proposed or amended claim(s) _____ would be allowable if submitted in a separate, timely filed amendment canceling the non-allowable claim(s).
7. ☒ For purposes of appeal, the proposed amendment(s): a) ☒ will not be entered, or b) ☐ will be entered and an explanation of how the new or amended claims would be rejected is provided below or appended.
   The status of the claim(s) is (or will be) as follows:
   Claim(s) allowed: _____.
   Claim(s) objected to: _____.
   Claim(s) rejected: *1-40*.
   Claim(s) withdrawn from consideration: _____.

AFFIDAVIT OR OTHER EVIDENCE

8. ☐ The affidavit or other evidence filed after a final action, but before or on the date of filing a Notice of Appeal will not be entered because applicant failed to provide a showing of good and sufficient reasons why the affidavit or other evidence is necessary and was not earlier presented. See 37 CFR 1.116(e).
9. ☐ The affidavit or other evidence filed after the date of filing a Notice of Appeal, but prior to the date of filing a brief, will not be entered because the affidavit or other evidence failed to overcome all rejections under appeal and/or appellant fails to provide a showing a good and sufficient reasons why it is necessary and was not earlier presented. See 37 CFR 41.33(d)(1).
10. ☐ The affidavit or other evidence is entered. An explanation of the status of the claims after entry is below or attached.

REQUEST FOR RECONSIDERATION/OTHER

11. ☐ The request for reconsideration has been considered but does NOT place the application in condition for allowance because: _____.
12. ☐ Note the attached Information *Disclosure Statement*(s). (PTO/SB/08) Paper No(s). _____
13. ☒ Other: see NOTE below.

/DANIEL WALSH/
Primary Examiner, Art Unit 2887

NOTE: The Examiner maintains the rejections of claims 1-40 as per the final office action (mail date 6-22-10).
Regarding the Applicants' argument that the claims require a transceiver or a transmitter that is a component of the phone and not an entire phone, the Examiner notes that the circuitry of a phone is not the entire phone. Other elements such as housings, keypads, etc. also make up a phone, and therefore the transceiver as interpreted by the Examiner does not require it to be interpreted as the whole phone. Further, referring to the device as a two state switching transceiver does not require the transceiver/transmitter to include the whole phone/device.

While a phone can be referred to a transceiver/transmitter, it is clear to one of ordinary skill in the art that elements within the phone itself are responsible for such functionality, and therefore, other elements are not. Therefore, the functionality relied upon by the Examiner does not require "the whole phone" interpretation as argued by the Applicant. For example, a housing or keypad, is part of the phone, but is not actively involved in switching.
.
With respect to the applicants argument regarding Zalewski, the Examiner again notes that the signal two state switching transceiver can be interpreted as the elements within the phone itself, and does not need to include the whole phone (such as housings/keypads, etc.) for such functionality.

In response to the Applicants argument re Perttila, the Examiner notes that Perttila is not interpreted as teaching away, as Perttila teaches that sharing a transceiver is known/possible.

With respect to the "single component", the Examiner notes that the claims do not recite "single component" and as a result, the above interpretation of the prior art (elements of the whole that read upon the claimed limitations do not require that the element as a whole be interpreted as the transceiver/transmitter) is again noted.

While the prior art teaches a mobile element, the Examiner notes that the whole mobile element is not relied upon for the transceiver/transmitter teachings. While the whole device of the prior art can be referred to as a transmitter/transceiver, only certain elements/circuitry is responsible for such teachings, and therefore, it is not the whole device/apparatus of the prior art, but a component/part thereof that is relied upon.

Attorney Docket No.: 120083-146181
Application No.: 10/560,262

Patent

DO NOT ENTER: /D.W./

IN THE UNITED STATES PATENT AND TRADEMARK OFFICE

In Application of:

Zatloukal et al.

Application No.: 10/560,262

Filed: December 9, 2005

For: EMULATED RADIO FREQUENCY INDENTIFICATION

Examiner: Daniel I. Walsh

Group Art Unit: 2887

Confirmation No.: 3358

Mail Stop AF
Commissioner for Patents
P.O. Box 1450
Alexandria, VA 22313-1450

SUPPLEMENTAL RESPONSE UNDER 37 CFR 1.116

These papers are filed in response to the Advisory Action and Notice of Non-Compliant Amendment mailed September 8, 2010. Reconsideration of the above-captioned application is respectfully requested in view of the amendments and remarks as follows.

Amendments to the Claims are reflected in the listing of claims which begins on page **2** of this paper.

Remarks/Arguments begin on page **9** of this paper.

IN THE UNITED STATES PATENT AND TRADEMARK OFFICE

In Application of:

Zatloukal et al.

Application No.: 10/560,262

Filed: December 9, 2005

For: EMULATED RADIO FREQUENCY INDENTIFICATION

Examiner: Daniel I. Walsh

Group Art Unit: 2887

Confirmation No.: 3358

Mail Stop AF
Commissioner for Patents
P.O. Box 1450
Alexandria, VA 22313-1450

SUPPLEMENTAL RESPONSE UNDER 37 CFR 1.116

These papers are filed in response to the Advisory Action and Notice of Non-Compliant Amendment mailed September 8, 2010. Reconsideration of the above-captioned application is respectfully requested in view of the amendments and remarks as follows.

Amendments to the Claims are reflected in the listing of claims which begins on page **2** of this paper.

Remarks/Arguments begin on page **9** of this paper.

AMENDMENTS TO THE CLAIMS

This listing of claims will replace all prior versions, and listings, of claims in the application:

Listing of Claims:

1. (Currently Amended) A method for providing a radio frequency identification (RFID) comprising:

receiving, by a mobile communication[[s]] device, an instruction to transmit a first data to a RFID reader;

switching a transceiver of the mobile communication[[s]] device from a first state to a second state, the transceiver configured to output voice call signals in the first state and to output RFID signals in the second state; and

outputting the first data by the transceiver in the second state, the transceiver outputting the first data as a radio frequency signal in a format employed by the RFID reader.

2. (Previously Presented) The method of claim 1, wherein said transceiver comprises a first signal processing unit configured to process voice call signals and a second signal processing unit configured to process RFID signals, said switching comprising coupling the second signal processing unit to a transmission path of the transceiver.

3. (Previously Presented) The method of claim 1, wherein said first data comprises a selected one of a security key and an identifier.

4. (Previously Presented) The method of claim 3, wherein said security key comprises a selected one of a garage door key, an exterior door key, an interior door key, and a motor vehicle door key.

5. (Previously Presented) The method of claim 1, wherein said first data comprises an identifier, and said identifier comprises a selected one of a social security number, a driver's license number, an affinity program account number, and a credit card number.

6. (Original) The method of claim 1, wherein the method further comprises facilitating the user in selecting the first data from a plurality of data using the mobile communication device.

7. (Original) The method of claim 1, wherein the method further comprises facilitating provision of the first data to the mobile communication device.

8. (Previously Presented) The method of claim 7, wherein said facilitating of the provisioning of the data to the mobile communication device includes facilitating provision of at least a signaling attribute associated with the outputting of the data in the format employed by the RFID reader.

9. (Previously Presented) The method of claim 1, wherein the method further comprises:

monitoring for proximal presence of the RFID reader by the mobile communication device; and

on detection of the RFID reader by the mobile communication device, outputting by the transceiver a second data as a second radio frequency signal, the outputting emulating output of the second data by a RFID transponder of a passive type.

10. (Previously Presented) The method of claim 9, wherein said monitoring comprises sensing for a probing radio frequency signal of the RFID reader by the mobile communication device.

11. (Original) The method of claim 9, wherein said first and second data are the same data.

12. (Original) The method of claim 1, wherein the mobile communication device is a selected one of a wireless mobile phone and a personal digital assistant equipped with communication capability.

13. (Previously Presented) A method for providing a radio frequency identifier (RFID), comprising:

monitoring for proximal presence of a RFID reader by a mobile communication device, the mobile communication device having a transceiver configured to output a RFID signal to the RFID reader, the transceiver being also configured to output a voice call signal for transmission at least in part over a wireless network; and

on detection of the RFID reader, outputting by the transceiver a data as a radio frequency signal in a format employed by the RFID reader.

14. (Previously Presented) The method of claim 13, wherein said monitoring comprises sensing for a probing radio frequency signal of the RFID reader by the mobile communication device.

15. (Original) The method of claim 13, wherein said data comprises a security key.

16. (Original) The method of claim 15, wherein said security key comprises a door key.

17. (Original) The method of claim 16, wherein said door key comprises a selected one of a garage door key, an exterior door key, an interior door key, and a motor vehicle door key.

18. (Original) The method of claim 13, wherein the method further comprises facilitating provision of the data to the mobile communication device.

19. (Previously Presented) The method of claim 18, wherein said facilitating of the provisioning of the data to the mobile communication device includes facilitating provision of at least a signaling attribute associated with the outputting of the data in the format employed by the RFID reader.

20. (Original) The method of claim 13, wherein the mobile communication device is a selected of a wireless mobile phone and a personal digital assistant equipped with communication capability.

21. (Previously Presented) A mobile communication device comprising:

a transmitter configured to transmit a radio frequency signal, the transmitter comprising a first signal processing section and a second signal processing section, the first signal processing section configured to output voice call signals in a first radio frequency range and the second signal processing section configured to output RFID signals in a second radio frequency range;

a storage medium to store a first data and instructions to operate the transmitter, the transmitter being operated to switch between the first and second signal processing sections to selectively (a) output a first data as a RFID signal in a format employed by a RFID reader, in response to a user instruction, and (b) output a voice call signal for transmission over a wireless network; and

a processor coupled to the transmitter and the storage to execute the instructions.

22. (Original) The device of claim 21, wherein said first data comprises a selected one of a security key and an identifier.

23. (Original) The device of claim 22, wherein said first data comprises a security key, and said security key comprises a door key.

24. (Original) The device of claim 23, wherein said door key comprises a selected one of a garage door key, an exterior door key, an interior door key, and a motor vehicle door key.

25. (Original) The device of claim 22, wherein said first data comprises an identifier, and said identifier comprises a selected one of a social security number, a driver's license number, an affinity program account number, and a credit card number.

26. (Original) The device of claim 21, wherein the instructions are further designed to facilitate the user in selecting the first data from a plurality of data, and instructing said output.

27. (Original) The device of claim 21, wherein the instructions are further designed to facilitate provision of the first data to the mobile communication device.

28. (Original) The device of claim 27, wherein the instructions are further designed to include with said facilitating, provisioning of at least a signaling attribute associated with the outputting of the first data in the form of a radio frequency signal.

29. (Previously Presented) The device of claim 21, wherein the instructions are further designed to

monitor for proximal presence of the RFID reader; and

on detection of the RFID reader, operate the transceiver to output a second data as a second RFID signal.

30. (Original) The device of claim 29, wherein the instructions are further designed to sense for a probing radio frequency signal of the RFID reader.

31. (Original) The device of claim 29, wherein said first and second data are the same data.

32. (Previously Presented) The device of claim 21, wherein the mobile communication device is a selected one of a wireless mobile phone and a personal digital assistant equipped with communication capability.

33. (Previously Presented) A mobile communication device comprising:

a transmitter configured to transmit a voice call signal in a first operational state and a RFID signal in a second operational state;

a storage medium to store a first data and instructions to switch the transmitter between the first and second operational states to selectively (a) monitor for proximal presence of a radio frequency identifier (RFID) reader, and on detection of a RFID reader, output a data as a RFID signal in a format employed by the RFID reader, and (b) transmit a voice call signal to another user of another communication device at least in part over a wireless network; and

a processor coupled to the transmitter and the storage to execute the instructions.

34. (Original) The device of claim 33, wherein said instructions are further designed to sense for a probing radio frequency signal of the RFID reader.

35. (Original) The device of claim 33, wherein said data comprises a security key.

36. (Original) The device of claim 35, wherein said security key comprises a door key.

37. (Original) The device of claim 36, wherein said door key comprises a selected one of a garage door key, an exterior door key, an interior door key, and a motor vehicle door key.

38. (Original) The device of claim 33, wherein the instructions are further designed to facilitate provision of the data to the mobile communication device.

39. (Original) The device of claim 38, wherein the instructions are further designed to include with said facilitating, provisioning of at least a signaling attribute associated with the outputting of the data in the form of a radio frequency signal.

40. (Original) The device of claim 33, wherein the mobile communication device is a selected of a wireless mobile phone and a personal digital assistant equipped with communication capability.

41.-60. (Cancelled)

REMARKS/ARGUMENTS

Claims 1-40 were rejected in the present Final Office Action (hereinafter the Action). In Applicant's response filed August 31, 2010, Applicant offered to amend claim 1 to address a couple of previously undetected formality issues. However, the amendments – deletions of two letters in claim 1 – were indicated by strikethrough and were not apparent to the Examiner. Therefore, in this supplemental response, the characters are marked for deletion with double brackets. Entry of the offered amendments will not introduce any new matter, nor alter the claim scope, necessitating new search.

For at least the reasons to follow (reproduced below as presented in Applicant's response filed August 31, 2010), Applicant submits that claims 1-40 are in condition for allowance. In addition, Applicant respectfully notes that while the law grants the Examiner wide latitude in attributing the broadest reasonable interpretation to the claims, the law requires that the words of the claim are given their plain meaning as understood by those of ordinary skill in the art. A person having ordinary skill in the art at the time of the invention would not have interpreted "a transceiver" or "a transmitter" in the manner asserted by the Examiner. And even if the claim terms could be interpreted in such a manner, the claims clearly require "***a transceiver***" (or "***a transmitter***" in claims 21 and 33) that is **a component of** the phone, not an entire phone. Zalewski does not teach the claimed element. Pertilla teaches away from the recitations of the claims; further, even if without this teaching away, the cited passages of Pertilla still fail to teach or suggest the recitations of the claims. Therefore, the burden of establishing the prima facie case has not been met. Entry of the offered amendments and allowance of the pending claims is respectfully requested.

CLAIM REJECTIONS UNDER 35 U.S.C. § 103

In "Claim Rejections – 35 U.S.C. § 103" on page 2 of the present Final Office Action, claims 1-40 were rejected under 35 U.S.C. § 103 (a) as allegedly being unpatentable over U.S. Patent No. 6,771,981 (hereinafter Zalewski).

In "Claim Rejections – 35 U.S.C. § 103" on page 6 of the present Final Office Action, claims 1-40 were rejected under 35 U.S.C. § 103 (a) as allegedly being unpatentable over Zalewski in view of U.S. Patent Application Publication No. 2004/0087273 (hereinafter Perttila).

In response, Applicant respectfully traverses the Examiner's rejections.

Claim 1 recites "*A method for providing a radio frequency identification (RFID) comprising:*

> *receiving, by a mobile communication device, an instruction to transmit a first data to a RFID reader;*
> *switching* *<u>a transceiver of the mobile communication device</u>* *from a first state to a second state, the transceiver configured to output voice call signals in the first state and to output RFID signals in the second state; and*
> *outputting the first data by the transceiver in the second state, the transceiver outputting the first data as a radio frequency signal in a format employed by the RFID reader (emphasis added)."*

Accordingly, when read as a **whole** as required by law, claim 1 is directed to a method for a mobile communication device to provide a radio frequency identification (RFID) to a RFID reader (effectively emulating a RFID transponder). The method requires among other things, the mobile communication device to have "(a) *transceiver configured to output voice call signals in (a) first state and to output RFID signals in (a) second state,"* and the operation of "*switching* *<u>(the) transceiver of the mobile communications device</u>* *from a first state (for voice call) to a second state (to emulate output of RFID)" (emphasis added)."*

In rejecting claim 1, the Examiner cited Zalewksi and Perttila for support. In the Action, the Examiner admitted that Zalewski teaches the employment of a radio frequency component (element 19), which is a known component of mobile phones, disposed in the mobile station 4, to transmit and receive (voice) calls (as clearly disclosed in col. 6, lines 66-67), and a <u>separate</u> RFID transponder (element 110) disposed on cover 100 to provide RFID to RFID readers. However, in the Action, the Examiner reasoned, in different parts of the Action, that either the electronic device (mobile station 4) of Zalewski or its voice and RFID components collectively, can be read to suggest the required "*two state (switching required) transceiver*" of claim 1. Applicant respectfully disagrees.

With respect to the assertion that the electronic device of Zalewski (which was interpreted as the mobile communication device of claim 1 in the Final Office Action) can be read to suggest the required "*two state (switching required) transceiver,*" it is submitted that claim 1 clearly recites the *"transceiver"* as a "*<u>transceiver of the mobile communications device</u>.*" Accordingly, the required "*two state (switching required) transceiver*" is necessarily <u>a component of</u> a mobile communication device. Thus, the electronic device can

not be interpreted as having taught or suggest the "*two-state (switching required) transceiver"* component of claim 1.

With respect to the assertion that the components of Zalewksi can be collectively read to suggest the required "*two state (switching required) transceiver,*" it is well settled that claim terms are to be read in accordance with their plain meaning as understood by those of ordinary skill in the art. The plain meaning of the term "transceiver" as understood by those of ordinary skill is that it is a single component for transmitting and receiving. Thus, such reading is impermissible under well settled case law.

The Examiner attempted to justify the "collective" reading by pointing to Applicant's own illustration and description of the required "*two state (switching required) transceiver,*" pointing in particular to the illustration of Figure 1 and its corresponding description. Again, Applicant respectfully disagrees, and submits that the Examiner's reading of Applicant description is a mischaracterization of Applicant's teaching. In Figure 1, Applicant clearly illustrated that the hardware/software elements employed to implement the functions of voice call and RFID emulation overlap with each other, in that they are two functions in one component sharing common circuitry/software (the overlapping section). In paragraph [0026], Applicant stated "In other words, illustrative embodiments of the present invention advantageously leverage on existing elements of mobile communication device 102 and <u>supplement</u> them to enable mobile communication device 102 to be able to provide a RFID, emulating a RFID transponder, as well as facilitating user communication." Applicant submits that the illustration and description of the present application when read properly, as it would be understood by a person of ordinary skill in the art, clearly disclosed a <u>single</u> component of "*two state (switching required) transceiver.*"

The Examiner's citation to Zalewski's hotel reservation example does not in any way alter this fundamental fact – that Zalewski teaches an at least two separately disposed components (without switching) approach, while claim 1 requires a "<u>single</u> *two state (switching required) transceiver*" approach. Applicant submits that a person of ordinary skill would clearly understand that a user of the electronic device in the hotel reservation example of Zalewski can continue to be on a voice call (using the voice component), while the door lock interrogates the RFID component separately disposed on the cover. There is simply <u>no</u> switching of state taught or suggested.

In Response of Argument, the Examiner asserted that Perttila teaches "sharing a common transceiver." Applicant respectfully disagrees. In the relevant part of [0116], Perttila stated that "However, because of the transmissions performed with the network are high-frequency signal relative to the RF signals used in connection with the RFID 930, it may not be practical or possible to share the transceiver, although it is possible in some implementations." Applicant submits that in this passage, Perttila is actually discouraging or teaching away from combining voice and RFID circuitry, as Perttila stated: while it is possible for some implementations, it "may not be practical or possible."

Moreover, even if the above passage is read to suggest "sharing (of) a common transceiver," Perttila merely taught or suggested the joint implementation of voice call function with a RFID reader function in a shared transceiver. Perttila did not suggest the required single component "*two state (switching required) transceiver*" for voice call and RFID transponder functions. (Note that RFID transponder is the counterpart of RFID reader, not the RFID reader itself. Accordingly, Perttila does not remedy this deficiency of Zalewski.

Thus in view of the foregoing, Zalewski's teaching of employing two separate (no switching required) components, one for voice call, disposed in the body of electronic device, and another for providing RFID, disposed in the cover, not only does not suggest the required "*two state (switching required) transceiver*" component of claim 1, but teaches away from such recitation. Therefore, for at least the above reasons, even if the Examiner's reading of Perttila is correct (which Applicant does not concede), Zalewski in view of Perttila still does not suggest claim 1.

Independent claims 13, 21 and 33 include generally similar recitations to claim 1. Therefore, independent claims 13, 21 and 33 are allowable for at least similar reasons with respect to claim 1.

Claims 2-12, 14-20, 22-32, and 34-40 depend from claim 1, 13, 21, or 33, thereby incorporating the recitations of their respective base independent claim. Therefore, due to the same reasons with respect to the independent claims, claims 2-12, 14-20, 22-32, and 34-40 are allowable.

CONCLUSION

In view of the foregoing, reconsideration and allowance of the pending claims is respectfully solicited. If the Examiner has any questions concerning the present paper, the Examiner is kindly requested to contact the undersigned at (206) 381-8819. If any fees are due in connection with filing this paper, the Commissioner is authorized to charge the Deposit Account of Schwabe, Williamson and Wyatt, P.C., No. 50-0393.

Respectfully submitted,
SCHWABE, WILLIAMSON & WYATT, P.C.

Dated: September 19, 2010

/Jo Ann Schmidt /
Jo Ann Schmidt
Reg. No. 62,255

Electronic Acknowledgement Receipt

EFS ID:	8461929
Application Number:	10560262
International Application Number:	
Confirmation Number:	3358
Title of Invention:	Emulated radio frequency identification
First Named Inventor/Applicant Name:	Peter Zatloukal
Customer Number:	60172
Filer:	Jo Ann Schmidt/Allyson Dahmen
Filer Authorized By:	Jo Ann Schmidt
Attorney Docket Number:	120083-146181
Receipt Date:	21-SEP-2010
Filing Date:	09-DEC-2005
Time Stamp:	17:11:56
Application Type:	U.S. National Stage under 35 USC 371

Payment information:

Submitted with Payment	no

File Listing:

Document Number	Document Description	File Name	File Size(Bytes)/ Message Digest	Multi Part /.zip	Pages (if appl.)
1		Varia_P064_Supp_AF_Resp.pdf	501541 36089266773c693e9c3487f6fcb662463166195c	yes	13

	Multipart Description/PDF files in .zip description		
	Document Description	**Start**	**End**
	Amendment After Final	1	1
	Claims	2	8
	Applicant Arguments/Remarks Made in an Amendment	9	13
Warnings:			
Information:			
	Total Files Size (in bytes):	501541	

This Acknowledgement Receipt evidences receipt on the noted date by the USPTO of the indicated documents, characterized by the applicant, and including page counts, where applicable. It serves as evidence of receipt similar to a Post Card, as described in MPEP 503.

<u>New Applications Under 35 U.S.C. 111</u>
If a new application is being filed and the application includes the necessary components for a filing date (see 37 CFR 1.53(b)-(d) and MPEP 506), a Filing Receipt (37 CFR 1.54) will be issued in due course and the date shown on this Acknowledgement Receipt will establish the filing date of the application.

<u>National Stage of an International Application under 35 U.S.C. 371</u>
If a timely submission to enter the national stage of an international application is compliant with the conditions of 35 U.S.C. 371 and other applicable requirements a Form PCT/DO/EO/903 indicating acceptance of the application as a national stage submission under 35 U.S.C. 371 will be issued in addition to the Filing Receipt, in due course.

<u>New International Application Filed with the USPTO as a Receiving Office</u>
If a new international application is being filed and the international application includes the necessary components for an international filing date (see PCT Article 11 and MPEP 1810), a Notification of the International Application Number and of the International Filing Date (Form PCT/RO/105) will be issued in due course, subject to prescriptions concerning national security, and the date shown on this Acknowledgement Receipt will establish the international filing date of the application.

PTO/SB/06 (07-06)
Approved for use through 1/31/2007. OMB 0651-0032
U.S. Patent and Trademark Office; U.S. DEPARTMENT OF COMMERCE
Under the Paperwork Reduction Act of 1995, no persons are required to respond to a collection of information unless it displays a valid OMB control number.

PATENT APPLICATION FEE DETERMINATION RECORD

Substitute for Form PTO-875

Application or Docket Number	Filing Date	
10/560,262	12/09/2005	☐ To be Mailed

APPLICATION AS FILED – PART I

FOR	(Column 1) NUMBER FILED	(Column 2) NUMBER EXTRA	SMALL ENTITY ☐ RATE ($)	SMALL ENTITY FEE ($)	OR	OTHER THAN SMALL ENTITY RATE ($)	OTHER THAN SMALL ENTITY FEE ($)
☐ BASIC FEE (37 CFR 1.16(a), (b), or (c))	N/A	N/A	N/A			N/A	
☐ SEARCH FEE (37 CFR 1.16(k), (i), or (m))	N/A	N/A	N/A			N/A	
☐ EXAMINATION FEE (37 CFR 1.16(o), (p), or (q))	N/A	N/A	N/A			N/A	
TOTAL CLAIMS (37 CFR 1.16(i))	minus 20 =	*	X $ =		OR	X $ =	
INDEPENDENT CLAIMS (37 CFR 1.16(h))	minus 3 =	*	X $ =			X $ =	
☐ APPLICATION SIZE FEE (37 CFR 1.16(s))	If the specification and drawings exceed 100 sheets of paper, the application size fee due is $250 ($125 for small entity) for each additional 50 sheets or fraction thereof. See 35 U.S.C. 41(a)(1)(G) and 37 CFR 1.16(s).						
☐ MULTIPLE DEPENDENT CLAIM PRESENT (37 CFR 1.16(j))							
* If the difference in column 1 is less than zero, enter "0" in column 2.			TOTAL			TOTAL	

APPLICATION AS AMENDED – PART II

AMENDMENT

09/21/2010	(Column 1) CLAIMS REMAINING AFTER AMENDMENT		(Column 2) HIGHEST NUMBER PREVIOUSLY PAID FOR	(Column 3) PRESENT EXTRA	SMALL ENTITY RATE ($)	SMALL ENTITY ADDITIONAL FEE ($)	OR	OTHER THAN SMALL ENTITY RATE ($)	OTHER THAN SMALL ENTITY ADDITIONAL FEE ($)
Total (37 CFR 1.16(i))	* 40	Minus	** 40	= 0	X $ =		OR	X $52=	0
Independent (37 CFR 1.16(h))	* 4	Minus	***4	= 0	X $ =		OR	X $220=	0
☐ Application Size Fee (37 CFR 1.16(s))									
☐ FIRST PRESENTATION OF MULTIPLE DEPENDENT CLAIM (37 CFR 1.16(j))							OR		
					TOTAL ADD'L FEE		OR	TOTAL ADD'L FEE	0

AMENDMENT

	(Column 1) CLAIMS REMAINING AFTER AMENDMENT		(Column 2) HIGHEST NUMBER PREVIOUSLY PAID FOR	(Column 3) PRESENT EXTRA	RATE ($)	ADDITIONAL FEE ($)		RATE ($)	ADDITIONAL FEE ($)
Total (37 CFR 1.16(i))	*	Minus	**	=	X $ =		OR	X $ =	
Independent (37 CFR 1.16(h))	*	Minus	***	=	X $ =		OR	X $ =	
☐ Application Size Fee (37 CFR 1.16(s))									
☐ FIRST PRESENTATION OF MULTIPLE DEPENDENT CLAIM (37 CFR 1.16(j))							OR		
					TOTAL ADD'L FEE		OR	TOTAL ADD'L FEE	

* If the entry in column 1 is less than the entry in column 2, write "0" in column 3.
** If the "Highest Number Previously Paid For" IN THIS SPACE is less than 20, enter "20".
*** If the "Highest Number Previously Paid For" IN THIS SPACE is less than 3, enter "3".
The "Highest Number Previously Paid For" (Total or Independent) is the highest number found in the appropriate box in column 1.

Legal Instrument Examiner:
/AMANDA FORD/

This collection of information is required by 37 CFR 1.16. The information is required to obtain or retain a benefit by the public which is to file (and by the USPTO to process) an application. Confidentiality is governed by 35 U.S.C. 122 and 37 CFR 1.14. This collection is estimated to take 12 minutes to complete, including gathering, preparing, and submitting the completed application form to the USPTO. Time will vary depending upon the individual case. Any comments on the amount of time you require to complete this form and/or suggestions for reducing this burden, should be sent to the Chief Information Officer, U.S. Patent and Trademark Office, U.S. Department of Commerce, P.O. Box 1450, Alexandria, VA 22313-1450. DO NOT SEND FEES OR COMPLETED FORMS TO THIS ADDRESS. **SEND TO: Commissioner for Patents, P.O. Box 1450, Alexandria, VA 22313-1450.**
If you need assistance in completing the form, call 1-800-PTO-9199 and select option 2.

UNITED STATES PATENT AND TRADEMARK OFFICE

UNITED STATES DEPARTMENT OF COMMERCE
United States Patent and Trademark Office
Address: COMMISSIONER FOR PATENTS
P.O. Box 1450
Alexandria, Virginia 22313-1450
www.uspto.gov

APPLICATION NO.	FILING DATE	FIRST NAMED INVENTOR	ATTORNEY DOCKET NO.	CONFIRMATION NO.
10/560,262	12/09/2005	Peter Zatloukal	120083-146181	3358

60172 7590 09/08/2010
SCHWABE, WILLIAMSON & WYATT, P.C.
1420 FIFTH, SUITE 3400
SEATTLE, WA 98101-4010

EXAMINER
WALSH, DANIEL I

ART UNIT	PAPER NUMBER
2887	

MAIL DATE	DELIVERY MODE
09/08/2010	PAPER

Please find below and/or attached an Office communication concerning this application or proceeding.

The time period for reply, if any, is set in the attached communication.

PTOL-90A (Rev. 04/07)

Notice of Non-Compliant Amendment (37 CFR 1.121)	Application No.	Applicant(s)	
	10/560,262	ZATLOUKAL ET AL.	
	Examiner	Art Unit	
	DANIEL WALSH	2887	

-- The MAILING DATE of this communication appears on the cover sheet with the correspondence address --

The amendment document filed on 31 August 2010 is considered non-compliant because it has failed to meet the requirements of 37 CFR 1.121 or 1.4. In order for the amendment document to be compliant, correction of the following item(s) is required.

THE FOLLOWING MARKED (X) ITEM(S) CAUSE THE AMENDMENT DOCUMENT TO BE NON-COMPLIANT:

- ☐ 1. Amendments to the specification:
  - ☐ A. Amended paragraph(s) do not include markings.
  - ☐ B. New paragraph(s) should not be underlined.
  - ☐ C. Other _____.
- ☐ 2. Abstract:
  - ☐ A. Not presented on a separate sheet. 37 CFR 1.72.
  - ☐ B. Other _____.
- ☐ 3. Amendments to the drawings:
  - ☐ A. The drawings are not properly identified in the top margin as "Replacement Sheet," "New Sheet," or "Annotated Sheet" as required by 37 CFR 1.121(d).
  - ☐ B. The practice of submitting proposed drawing correction has been eliminated. Replacement drawings showing amended figures, without markings, in compliance with 37 CFR 1.84 are required.
  - ☐ C. Other _____.
- ☒ 4. Amendments to the claims:
  - ☐ A. A complete listing of all of the claims is not present.
  - ☐ B. The listing of claims does not include the text of all pending claims (including withdrawn claims)
  - ☐ C. Each claim has not been provided with the proper status identifier, and as such, the individual status of each claim cannot be identified. Note: the status of every claim must be indicated after its claim number by using one of the following status identifiers: (Original), (Currently amended), (Canceled), (Previously presented), (New), (Not entered), (Withdrawn) and (Withdrawn-currently amended).
  - ☐ D. The claims of this amendment paper have not been presented in ascending numerical order.
  - ☒ E. Other: *see NOTE below*.
- ☐ 5. Other (e.g., the amendment is unsigned or not signed in accordance with 37 CFR 1.4):

_____

For further explanation of the amendment format required by 37 CFR 1.121, see MPEP § 714.

TIME PERIODS FOR FILING A REPLY TO THIS NOTICE:

1. Applicant is given **no new time period** if the non-compliant amendment is an after-final amendment or an amendment filed after allowance. If applicant wishes to resubmit the non-compliant after-final amendment with corrections, the **entire corrected amendment** must be resubmitted.

2. Applicant is given **one month**, or thirty (30) days, whichever is longer, from the mail date of this notice to supply the correction, if the non-compliant amendment is one of the following: a preliminary amendment, a non-final amendment (including a submission for a request for continued examination (RCE) under 37 CFR 1.114), a supplemental amendment filed within a suspension period under 37 CFR 1.103(a) or (c), and an amendment filed in response to a *Quayle* action. If any of above boxes 1. to 4. are checked, the correction required is only the **corrected section** of the non-compliant amendment in compliance with 37 CFR 1.121.

   Extensions of time are available under 37 CFR 1.136(a) only if the non-compliant amendment is a non-final amendment or an amendment filed in response to a *Quayle* action.

   Failure to timely respond to this notice will result in:
   Abandonment of the application if the non-compliant amendment is a non-final amendment or an amendment filed in response to a *Quayle* action; or
   Non-entry of the amendment if the non-compliant amendment is a preliminary amendment or supplemental amendment.

/DANIEL WALSH/ Primary Examiner, Art Unit 2887	

NOTE: The Examienr notes that the status identifier of claim 1 is "Currently Amended" but there does not appear to be any amendments in the claim (claim is not marked up). The Applicants response also indicates claim amendemnts were made to claim 1, but claim 1 is not marked up (does not show any amendments).

Further, the Examiner notes that the circuitry in Zalewski si intpereted to consitute a transceiver(communication sections of the phone). However, the device itself can be intepretedd as a transceiver, as well. Further, Perttila still teaches a common transceiver, since it recites "although it is possible in some implementation". This is not belived to be teaching away as argued by the Applicant. The Examiner suggests reconsideration of such arguments by the Applicant with filing a corrected response.

Advisory Action Before the Filing of an Appeal Brief	**Application No.** 10/560,262	**Applicant(s)** ZATLOUKAL ET AL.	
	Examiner DANIEL WALSH	**Art Unit** 2887	

--The MAILING DATE of this communication appears on the cover sheet with the correspondence address --

THE REPLY FILED 31 August 2010 FAILS TO PLACE THIS APPLICATION IN CONDITION FOR ALLOWANCE.

1. ☒ The reply was filed after a final rejection, but prior to or on the same day as filing a Notice of Appeal. To avoid abandonment of this application, applicant must timely file one of the following replies: (1) an amendment, affidavit, or other evidence, which places the application in condition for allowance; (2) a Notice of Appeal (with appeal fee) in compliance with 37 CFR 41.31; or (3) a Request for Continued Examination (RCE) in compliance with 37 CFR 1.114. The reply must be filed within one of the following time periods:
   a) ☒ The period for reply expires 3 months from the mailing date of the final rejection.
   b) ☐ The period for reply expires on: (1) the mailing date of this Advisory Action, or (2) the date set forth in the final rejection, whichever is later. In no event, however, will the statutory period for reply expire later than SIX MONTHS from the mailing date of the final rejection.
   Examiner Note: If box 1 is checked, check either box (a) or (b). ONLY CHECK BOX (b) WHEN THE FIRST REPLY WAS FILED WITHIN TWO MONTHS OF THE FINAL REJECTION. See MPEP 706.07(f).

Extensions of time may be obtained under 37 CFR 1.136(a). The date on which the petition under 37 CFR 1.136(a) and the appropriate extension fee have been filed is the date for purposes of determining the period of extension and the corresponding amount of the fee. The appropriate extension fee under 37 CFR 1.17(a) is calculated from: (1) the expiration date of the shortened statutory period for reply originally set in the final Office action; or (2) as set forth in (b) above, if checked. Any reply received by the Office later than three months after the mailing date of the final rejection, even if timely filed, may reduce any earned patent term adjustment. See 37 CFR 1.704(b).

NOTICE OF APPEAL

2. ☐ The Notice of Appeal was filed on _____. A brief in compliance with 37 CFR 41.37 must be filed within two months of the date of filing the Notice of Appeal (37 CFR 41.37(a)), or any extension thereof (37 CFR 41.37(e)), to avoid dismissal of the appeal. Since a Notice of Appeal has been filed, any reply must be filed within the time period set forth in 37 CFR 41.37(a).

AMENDMENTS

3. ☐ The proposed amendment(s) filed after a final rejection, but prior to the date of filing a brief, will not be entered because
   (a) ☐ They raise new issues that would require further consideration and/or search (see NOTE below);
   (b) ☐ They raise the issue of new matter (see NOTE below);
   (c) ☐ They are not deemed to place the application in better form for appeal by materially reducing or simplifying the issues for appeal; and/or
   (d) ☐ They present additional claims without canceling a corresponding number of finally rejected claims.
   NOTE: _____. (See 37 CFR 1.116 and 41.33(a)).
4. ☒ The amendments are not in compliance with 37 CFR 1.121. See attached Notice of Non-Compliant Amendment (PTOL-324).
5. ☐ Applicant's reply has overcome the following rejection(s): _____.
6. ☐ Newly proposed or amended claim(s) _____ would be allowable if submitted in a separate, timely filed amendment canceling the non-allowable claim(s).
7. ☒ For purposes of appeal, the proposed amendment(s): a) ☒ will not be entered, or b) ☐ will be entered and an explanation of how the new or amended claims would be rejected is provided below or appended.
   The status of the claim(s) is (or will be) as follows:
   Claim(s) allowed: _____.
   Claim(s) objected to: _____.
   Claim(s) rejected: 1-40.
   Claim(s) withdrawn from consideration: _____.

AFFIDAVIT OR OTHER EVIDENCE

8. ☐ The affidavit or other evidence filed after a final action, but before or on the date of filing a Notice of Appeal will not be entered because applicant failed to provide a showing of good and sufficient reasons why the affidavit or other evidence is necessary and was not earlier presented. See 37 CFR 1.116(e).
9. ☐ The affidavit or other evidence filed after the date of filing a Notice of Appeal, but prior to the date of filing a brief, will not be entered because the affidavit or other evidence failed to overcome all rejections under appeal and/or appellant fails to provide a showing a good and sufficient reasons why it is necessary and was not earlier presented. See 37 CFR 41.33(d)(1).
10. ☐ The affidavit or other evidence is entered. An explanation of the status of the claims after entry is below or attached.

REQUEST FOR RECONSIDERATION/OTHER

11. ☐ The request for reconsideration has been considered but does NOT place the application in condition for allowance because: _____.
12. ☐ Note the attached Information *Disclosure Statement*(s). (PTO/SB/08) Paper No(s). _____
13. ☒ Other: see NOTE below.

/DANIEL WALSH/
Primary Examiner, Art Unit 2887

NOTE:
Claims 1-40 remain rejected as per the final office action (mail date 6-22-10). The Amendment will not be entered because it is non-compliant (see attached PTO-324) and it is unclear if the version of the claims is proper/correct.

The Examienr notes that the status identifier of claim 1 is "Currently Amended" but there does not appear to be any amendments in the claim (claim is not marked up). The Applicants response also indicates claim amendemnts were made to claim 1, but claim 1 is not marked up (does not show any amendments).

Further, the Examiner notes that the circuitry in Zalewski si intpereted to consitute a transceiver(communication sections of the phone). However, the device itself can be intepretedd as a transceiver, as well. Further, Perttila still teaches a common transceiver, since it recites "although it is possible in some implementation". This is not belived to be teaching away as argued by the Applicant. The Examiner suggests reconsideration of such arguments by the Applicant with filing a corrected response.

IN THE UNITED STATES PATENT AND TRADEMARK OFFICE

In Application of:

Zatloukal et al.

Application No.: 10/560,262

Filed: December 9, 2005

For: EMULATED RADIO FREQUENCY INDENTIFICATION

Examiner: Daniel I. Walsh

Group Art Unit: 2887

Confirmation No.: 3358

Mail Stop AF
Commissioner for Patents
P.O. Box 1450
Alexandria, VA 22313-1450

RESPONSE UNDER 37 CFR 1.116

Included is a response to the Final Office Action dated June 22, 2010. Consideration of the above-captioned application is respectfully requested in view of the amendments and remarks as follows.

Amendments to the Claims are reflected in the listing of claims which begins on page 2 of this paper.

Remarks/Arguments begin on page 9 of this paper.

AMENDMENTS TO THE CLAIMS

This listing of claims will replace all prior versions, and listings, of claims in the application:

Listing of Claims:

1. (Currently Amended) A method for providing a radio frequency identification (RFID) comprising:

receiving, by a mobile communications device, an instruction to transmit a first data to a RFID reader;

switching a transceiver of the mobile communications device from a first state to a second state, the transceiver configured to output voice call signals in the first state and to output RFID signals in the second state; and

outputting the first data by the transceiver in the second state, the transceiver outputting the first data as a radio frequency signal in a format employed by the RFID reader.

2. (Previously Presented) The method of claim 1, wherein said transceiver comprises a first signal processing unit configured to process voice call signals and a second signal processing unit configured to process RFID signals, said switching comprising coupling the second signal processing unit to a transmission path of the transceiver.

3. (Previously Presented) The method of claim 1, wherein said first data comprises a selected one of a security key and an identifier.

4. (Previously Presented) The method of claim 3, wherein said security key comprises a selected one of a garage door key, an exterior door key, an interior door key, and a motor vehicle door key.

5. (Previously Presented) The method of claim 1, wherein said first data comprises an identifier, and said identifier comprises a selected one of a social security number, a driver's license number, an affinity program account number, and a credit card number.

6. (Original) The method of claim 1, wherein the method further comprises facilitating the user in selecting the first data from a plurality of data using the mobile communication device.

7. (Original) The method of claim 1, wherein the method further comprises facilitating provision of the first data to the mobile communication device.

8. (Previously Presented) The method of claim 7, wherein said facilitating of the provisioning of the data to the mobile communication device includes facilitating provision of at least a signaling attribute associated with the outputting of the data in the format employed by the RFID reader.

9. (Previously Presented) The method of claim 1, wherein the method further comprises:

monitoring for proximal presence of the RFID reader by the mobile communication device; and

on detection of the RFID reader by the mobile communication device, outputting by the transceiver a second data as a second radio frequency signal, the outputting emulating output of the second data by a RFID transponder of a passive type.

10. (Previously Presented) The method of claim 9, wherein said monitoring comprises sensing for a probing radio frequency signal of the RFID reader by the mobile communication device.

11. (Original) The method of claim 9, wherein said first and second data are the same data.

12. (Original) The method of claim 1, wherein the mobile communication device is a selected one of a wireless mobile phone and a personal digital assistant equipped with communication capability.

13. (Previously Presented) A method for providing a radio frequency identifier (RFID), comprising:

monitoring for proximal presence of a RFID reader by a mobile communication device, the mobile communication device having a transceiver configured to output a RFID signal to the RFID reader, the transceiver being also configured to output a voice call signal for transmission at least in part over a wireless network; and

on detection of the RFID reader, outputting by the transceiver a data as a radio frequency signal in a format employed by the RFID reader.

14. (Previously Presented) The method of claim 13, wherein said monitoring comprises sensing for a probing radio frequency signal of the RFID reader by the mobile communication device.

15. (Original) The method of claim 13, wherein said data comprises a security key.

16. (Original) The method of claim 15, wherein said security key comprises a door key.

17. (Original) The method of claim 16, wherein said door key comprises a selected one of a garage door key, an exterior door key, an interior door key, and a motor vehicle door key.

18. (Original) The method of claim 13, wherein the method further comprises facilitating provision of the data to the mobile communication device.

19. (Previously Presented) The method of claim 18, wherein said facilitating of the provisioning of the data to the mobile communication device includes facilitating provision of at least a signaling attribute associated with the outputting of the data in the format employed by the RFID reader.

20. (Original) The method of claim 13, wherein the mobile communication device is a selected of a wireless mobile phone and a personal digital assistant equipped with communication capability.

21. (Previously Presented) A mobile communication device comprising:

a transmitter configured to transmit a radio frequency signal, the transmitter comprising a first signal processing section and a second signal processing section, the first signal processing section configured to output voice call signals in a first radio frequency range and the second signal processing section configured to output RFID signals in a second radio frequency range;

a storage medium to store a first data and instructions to operate the transmitter, the transmitter being operated to switch between the first and second signal processing sections to selectively (a) output a first data as a RFID signal in a format employed by a RFID reader, in response to a user instruction, and (b) output a voice call signal for transmission over a wireless network; and

a processor coupled to the transmitter and the storage to execute the instructions.

22. (Original) The device of claim 21, wherein said first data comprises a selected one of a security key and an identifier.

23. (Original) The device of claim 22, wherein said first data comprises a security key, and said security key comprises a door key.

24. (Original) The device of claim 23, wherein said door key comprises a selected one of a garage door key, an exterior door key, an interior door key, and a motor vehicle door key.

25. (Original) The device of claim 22, wherein said first data comprises an identifier, and said identifier comprises a selected one of a social security number, a driver's license number, an affinity program account number, and a credit card number.

26. (Original) The device of claim 21, wherein the instructions are further designed to facilitate the user in selecting the first data from a plurality of data, and instructing said output.

27. (Original) The device of claim 21, wherein the instructions are further designed to facilitate provision of the first data to the mobile communication device.

28. (Original) The device of claim 27, wherein the instructions are further designed to include with said facilitating, provisioning of at least a signaling attribute associated with the outputting of the first data in the form of a radio frequency signal.

29. (Previously Presented) The device of claim 21, wherein the instructions are further designed to

monitor for proximal presence of the RFID reader; and

on detection of the RFID reader, operate the transceiver to output a second data as a second RFID signal.

30. (Original) The device of claim 29, wherein the instructions are further designed to sense for a probing radio frequency signal of the RFID reader.

31. (Original) The device of claim 29, wherein said first and second data are the same data.

32. (Previously Presented) The device of claim 21, wherein the mobile communication device is a selected one of a wireless mobile phone and a personal digital assistant equipped with communication capability.

33. (Previously Presented) A mobile communication device comprising:

a transmitter configured to transmit a voice call signal in a first operational state and a RFID signal in a second operational state;

a storage medium to store a first data and instructions to switch the transmitter between the first and second operational states to selectively (a) monitor for proximal presence of a radio frequency identifier (RFID) reader, and on detection of a RFID reader, output a data as a RFID signal in a format employed by the RFID reader, and (b) transmit a voice call signal to another user of another communication device at least in part over a wireless network; and

a processor coupled to the transmitter and the storage to execute the instructions.

34. (Original) The device of claim 33, wherein said instructions are further designed to sense for a probing radio frequency signal of the RFID reader.

35. (Original) The device of claim 33, wherein said data comprises a security key.

36. (Original) The device of claim 35, wherein said security key comprises a door key.

37. (Original) The device of claim 36, wherein said door key comprises a selected one of a garage door key, an exterior door key, an interior door key, and a motor vehicle door key.

38. (Original) The device of claim 33, wherein the instructions are further designed to facilitate provision of the data to the mobile communication device.

39. (Original) The device of claim 38, wherein the instructions are further designed to include with said facilitating, provisioning of at least a signaling attribute associated with the outputting of the data in the form of a radio frequency signal.

40. (Original) The device of claim 33, wherein the mobile communication device is a selected of a wireless mobile phone and a personal digital assistant equipped with communication capability.

41.-60. (Cancelled)

REMARKS/ARGUMENTS

Claims 1-40 were rejected in the present Final Office Action (hereinafter the Action). In response, Applicant offers to amend claim 1 to address a couple of previously undetected formality issues. Entry of the offered amendments will not introduce any new matter, nor alter the claim scope, necessitating new search. For at least the reasons to follow, Applicant submits that claims 1-40 are in condition of allowance. Therefore, entry of the offered amendment and allowance of the pending claims are respectfully requested.

CLAIM REJECTIONS UNDER 35 U.S.C. § 103

In "Claim Rejections – 35 U.S.C. § 103" on page 2 of the present Final Office Action, claims 1-40 were rejected under 35 U.S.C. § 103 (a) as allegedly being unpatentable over U.S. Patent No. 6,771,981 (hereinafter Zalewski).

In "Claim Rejections – 35 U.S.C. § 103" on page 6 of the present Final Office Action, claims 1-40 were rejected under 35 U.S.C. § 103 (a) as allegedly being unpatentable over Zalewski in view of U.S. Patent Application Publication No. 2004/0087273 (hereinafter Perttila).

In response, Applicant respectfully traverses the Examiner's rejections.

Claim 1 recites "*A method for providing a radio frequency identification (RFID) comprising:*

> *receiving, by a mobile communication device, an instruction to transmit a first data to a RFID reader;*
> *switching <u>a transceiver of the mobile communication device</u> from a first state to a second state, the transceiver configured to output voice call signals in the first state and to output RFID signals in the second state; and*
> *outputting the first data by the transceiver in the second state, the transceiver outputting the first data as a radio frequency signal in a format employed by the RFID reader (emphasis added)."*

Accordingly, when read as a **whole** as required by law, claim 1 is directed to a method for a mobile communication device to provide a radio frequency identification (RFID) to a RFID reader (effectively emulating a RFID transponder). The method requires among other things, the mobile communication device to have "(a) *transceiver configured to output voice call signals in (a) first state and to output RFID signals in (a) second state,"* and

the operation of "*switching (the) transceiver of the mobile communications device from a first state (for voice call) to a second state (to emulate output of RFID)" (emphasis added)."*

In rejecting claim 1, the Examiner cited Zalewksi and Perttila for support. In the Action, the Examiner admitted that Zalewski teaches the employment of a radio frequency component (element 19), which is a known component of mobile phones, disposed in the mobile station 4, to transmit and receive (voice) calls (as clearly disclosed in col. 6, lines 66-67), and a separate RFID transponder (element 110) disposed on cover 100 to provide RFID to RFID readers. However, in the Action, the Examiner reasoned, in different parts of the Action, that either the electronic device (mobile station 4) of Zalewski or its voice and RFID components collectively, can be read to suggest the required "*two state (switching required) transceiver*" of claim 1. Applicant respectfully disagrees.

With respect to the assertion that the electronic device of Zalewski (which was interpreted as the mobile communication device of claim 1 in the Final Office Action) can be read to suggest the required "*two state (switching required) transceiver,*" it is submitted that claim 1 clearly recites the *"transceiver"* as a "*transceiver of the mobile communications device."* Accordingly, the required "*two state (switching required) transceiver*" is necessarily a component of a mobile communication device. Thus, the electronic device can not be interpreted as having taught or suggest the "*two-state (switching required) transceiver"* component of claim 1.

With respect to the assertion that the components of Zalewksi can be collectively read to suggest the required "*two state (switching required) transceiver,*" it is well settled that claim terms are to be read in accordance with their plain meaning as understood by those of ordinary skill in the art. The plain meaning of the term "transceiver" as understood by those of ordinary skill is that it is a single component for transmitting and receiving. Thus, such reading is impermissible under well settled case law.

The Examiner attempted to justify the "collective" reading by pointing to Applicant's own illustration and description of the required "*two state (switching required) transceiver,*" pointing in particular to the illustration of Figure 1 and its corresponding description. Again, Applicant respectfully disagrees, and submits that the Examiner's reading of Applicant description is a mischaracterization of Applicant's teaching. In Figure 1, Applicant clearly illustrated that the hardware/software elements employed to implement the functions of voice

call and RFID emulation overlap with each other, in that they are two functions in one component sharing common circuitry/software (the overlapping section). In paragraph [0026], Applicant stated "In other words, illustrative embodiments of the present invention advantageously leverage on existing elements of mobile communication device 102 and supplement them to enable mobile communication device 102 to be able to provide a RFID, emulating a RFID transponder, as well as facilitating user communication." Applicant submits that the illustration and description of the present application when read properly, as it would be understood by a person of ordinary skill in the art, clearly disclosed a single component of "*two state (switching required) transceiver.*"

The Examiner's citation to Zalewski's hotel reservation example does not in any way alter this fundamental fact – that Zalewski teaches an at least two separately disposed components (without switching) approach, while claim 1 requires a "single *two state (switching required) transceiver*" approach. Applicant submits that a person of ordinary skill would clearly understand that a user of the electronic device in the hotel reservation example of Zalewski can continue to be on a voice call (using the voice component), while the door lock interrogates the RFID component separately disposed on the cover. There is simply no switching of state taught or suggested.

In Response of Argument, the Examiner asserted that Perttila teaches "sharing a common transceiver." Applicant respectfully disagrees. In the relevant part of [0116], Perttila stated that "However, because of the transmissions performed with the network are high-frequency signal relative to the RF signals used in connection with the RFID 930, it may not be practical or possible to share the transceiver, although it is possible in some implementations." Applicant submits that in this passage, Perttila is actually discouraging or teaching away from combining voice and RFID circuitry, as Perttila stated: while it is possible for some implementations, it "may not be practical or possible."

Moreover, even if the above passage is read to suggest "sharing (of) a common transceiver," Perttila merely taught or suggested the joint implementation of voice call function with a RFID reader function in a shared transceiver. Perttila did not suggest the required single component "*two state (switching required) transceiver"* for voice call and RFID transponder functions. (Note that RFID transponder is the counterpart of RFID reader,

not the RFID reader itself. Accordingly, Perttila does not remedy this deficiency of Zalewski.

Thus in view of the foregoing, Zalewski's teaching of employing two separate (no switching required) components, one for voice call, disposed in the body of electronic device, and another for providing RFID, disposed in the cover, not only does not suggest the required "*two state (switching required) transceiver*" component of claim 1, but teaches away from such recitation. Therefore, for at least the above reasons, even if the Examiner's reading of Perttila is correct (which Applicant does not concede), Zalewski in view of Perttila still does not suggest claim 1.

Independent claims 13, 21 and 33 include generally similar recitations to claim 1. Therefore, independent claims 13, 21 and 33 are allowable for at least similar reasons with respect to claim 1.

Claims 2-12, 14-20, 22-32, and 34-40 depend from claim 1, 13, 21, or 33, thereby incorporating the recitations of their respective base independent claim. Therefore, due to the same reasons with respect to the independent claims, claims 2-12, 14-20, 22-32, and 34-40 are allowable.

CONCLUSION

In view of the foregoing, reconsideration and allowance of the pending claims is respectfully solicited. If the Examiner has any questions concerning the present paper, the Examiner is kindly requested to contact the undersigned at (206) 381-8819. If any fees are due in connection with filing this paper, the Commissioner is authorized to charge the Deposit Account of Schwabe, Williamson and Wyatt, P.C., No. 50-0393.

Respectfully submitted,
SCHWABE, WILLIAMSON & WYATT, P.C.

Dated: August 31, 2010

s/Al AuYeung/
Al AuYeung
Reg. No. 35,432

Electronic Acknowledgement Receipt

EFS ID:	8327687
Application Number:	10560262
International Application Number:	
Confirmation Number:	3358
Title of Invention:	Emulated radio frequency identification
First Named Inventor/Applicant Name:	Peter Zatloukal
Customer Number:	60172
Filer:	Aloysius T.C. Auyeung/Allyson Dahmen
Filer Authorized By:	Aloysius T.C. Auyeung
Attorney Docket Number:	120083-146181
Receipt Date:	31-AUG-2010
Filing Date:	09-DEC-2005
Time Stamp:	16:44:05
Application Type:	U.S. National Stage under 35 USC 371

Payment information:

Submitted with Payment	no

File Listing:

Document Number	Document Description	File Name	File Size(Bytes)/ Message Digest	Multi Part /.zip	Pages (if appl.)
1		Varia_P064_AfterFinalResp.pdf	468609 e1ecbca06f30ce8ab31f45de22ebd31aed80ebc7	yes	12

	Multipart Description/PDF files in .zip description		
	Document Description	**Start**	**End**
	Amendment After Final	1	1
	Claims	2	8
	Applicant Arguments/Remarks Made in an Amendment	9	12
Warnings:			
Information:			
	Total Files Size (in bytes):	468609	

This Acknowledgement Receipt evidences receipt on the noted date by the USPTO of the indicated documents, characterized by the applicant, and including page counts, where applicable. It serves as evidence of receipt similar to a Post Card, as described in MPEP 503.

<u>New Applications Under 35 U.S.C. 111</u>
If a new application is being filed and the application includes the necessary components for a filing date (see 37 CFR 1.53(b)-(d) and MPEP 506), a Filing Receipt (37 CFR 1.54) will be issued in due course and the date shown on this Acknowledgement Receipt will establish the filing date of the application.

<u>National Stage of an International Application under 35 U.S.C. 371</u>
If a timely submission to enter the national stage of an international application is compliant with the conditions of 35 U.S.C. 371 and other applicable requirements a Form PCT/DO/EO/903 indicating acceptance of the application as a national stage submission under 35 U.S.C. 371 will be issued in addition to the Filing Receipt, in due course.

<u>New International Application Filed with the USPTO as a Receiving Office</u>
If a new international application is being filed and the international application includes the necessary components for an international filing date (see PCT Article 11 and MPEP 1810), a Notification of the International Application Number and of the International Filing Date (Form PCT/RO/105) will be issued in due course, subject to prescriptions concerning national security, and the date shown on this Acknowledgement Receipt will establish the international filing date of the application.

PTO/SB/06 (07-06)
Approved for use through 1/31/2007. OMB 0651-0032
U.S. Patent and Trademark Office; U.S. DEPARTMENT OF COMMERCE
Under the Paperwork Reduction Act of 1995, no persons are required to respond to a collection of information unless it displays a valid OMB control number.

PATENT APPLICATION FEE DETERMINATION RECORD

Substitute for Form PTO-875

Application or Docket Number	Filing Date	
10/560,262	12/09/2005	☐ To be Mailed

APPLICATION AS FILED – PART I

FOR	(Column 1) NUMBER FILED	(Column 2) NUMBER EXTRA	SMALL ENTITY ☐ RATE ($)	SMALL ENTITY FEE ($)	OR	OTHER THAN SMALL ENTITY RATE ($)	OTHER THAN SMALL ENTITY FEE ($)
☐ BASIC FEE (37 CFR 1.16(a), (b), or (c))	N/A	N/A	N/A			N/A	
☐ SEARCH FEE (37 CFR 1.16(k), (i), or (m))	N/A	N/A	N/A			N/A	
☐ EXAMINATION FEE (37 CFR 1.16(o), (p), or (q))	N/A	N/A	N/A			N/A	
TOTAL CLAIMS (37 CFR 1.16(i))	minus 20 =	*	X $ =		OR	X $ =	
INDEPENDENT CLAIMS (37 CFR 1.16(h))	minus 3 =	*	X $ =			X $ =	
☐ APPLICATION SIZE FEE (37 CFR 1.16(s))	If the specification and drawings exceed 100 sheets of paper, the application size fee due is $250 ($125 for small entity) for each additional 50 sheets or fraction thereof. See 35 U.S.C. 41(a)(1)(G) and 37 CFR 1.16(s).						
☐ MULTIPLE DEPENDENT CLAIM PRESENT (37 CFR 1.16(j))							
* If the difference in column 1 is less than zero, enter "0" in column 2.			TOTAL			TOTAL	

APPLICATION AS AMENDED – PART II

AMENDMENT

08/31/2010	(Column 1) CLAIMS REMAINING AFTER AMENDMENT		(Column 2) HIGHEST NUMBER PREVIOUSLY PAID FOR	(Column 3) PRESENT EXTRA	SMALL ENTITY RATE ($)	SMALL ENTITY ADDITIONAL FEE ($)	OR	OTHER THAN SMALL ENTITY RATE ($)	OTHER THAN SMALL ENTITY ADDITIONAL FEE ($)
Total (37 CFR 1.16(i))	* 40	Minus	** 40	= 0	X $ =		OR	X $52=	0
Independent (37 CFR 1.16(h))	* 4	Minus	***4	= 0	X $ =		OR	X $220=	0
☐ Application Size Fee (37 CFR 1.16(s))									
☐ FIRST PRESENTATION OF MULTIPLE DEPENDENT CLAIM (37 CFR 1.16(j))							OR		
					TOTAL ADD'L FEE		OR	TOTAL ADD'L FEE	0

AMENDMENT

	(Column 1) CLAIMS REMAINING AFTER AMENDMENT		(Column 2) HIGHEST NUMBER PREVIOUSLY PAID FOR	(Column 3) PRESENT EXTRA	RATE ($)	ADDITIONAL FEE ($)		RATE ($)	ADDITIONAL FEE ($)
Total (37 CFR 1.16(i))	*	Minus	**	=	X $ =		OR	X $ =	
Independent (37 CFR 1.16(h))	*	Minus	***	=	X $ =		OR	X $ =	
☐ Application Size Fee (37 CFR 1.16(s))									
☐ FIRST PRESENTATION OF MULTIPLE DEPENDENT CLAIM (37 CFR 1.16(j))							OR		
					TOTAL ADD'L FEE		OR	TOTAL ADD'L FEE	

* If the entry in column 1 is less than the entry in column 2, write "0" in column 3.
** If the "Highest Number Previously Paid For" IN THIS SPACE is less than 20, enter "20".
*** If the "Highest Number Previously Paid For" IN THIS SPACE is less than 3, enter "3".
The "Highest Number Previously Paid For" (Total or Independent) is the highest number found in the appropriate box in column 1.

Legal Instrument Examiner:
/MONIQUE BRUNSON/

This collection of information is required by 37 CFR 1.16. The information is required to obtain or retain a benefit by the public which is to file (and by the USPTO to process) an application. Confidentiality is governed by 35 U.S.C. 122 and 37 CFR 1.14. This collection is estimated to take 12 minutes to complete, including gathering, preparing, and submitting the completed application form to the USPTO. Time will vary depending upon the individual case. Any comments on the amount of time you require to complete this form and/or suggestions for reducing this burden, should be sent to the Chief Information Officer, U.S. Patent and Trademark Office, U.S. Department of Commerce, P.O. Box 1450, Alexandria, VA 22313-1450. DO NOT SEND FEES OR COMPLETED FORMS TO THIS ADDRESS. **SEND TO: Commissioner for Patents, P.O. Box 1450, Alexandria, VA 22313-1450.**
If you need assistance in completing the form, call 1-800-PTO-9199 and select option 2.

UNITED STATES PATENT AND TRADEMARK OFFICE

UNITED STATES DEPARTMENT OF COMMERCE
United States Patent and Trademark Office
Address: COMMISSIONER FOR PATENTS
P.O. Box 1450
Alexandria, Virginia 22313-1450
www.uspto.gov

APPLICATION NO.	FILING DATE	FIRST NAMED INVENTOR	ATTORNEY DOCKET NO.	CONFIRMATION NO.
10/560,262	12/09/2005	Peter Zatloukal	120083-146181	3358

60172 7590 06/22/2010
SCHWABE, WILLIAMSON & WYATT, P.C.
1420 FIFTH, SUITE 3400
SEATTLE, WA 98101-4010

EXAMINER
WALSH, DANIEL I

ART UNIT	PAPER NUMBER
2887	

MAIL DATE	DELIVERY MODE
06/22/2010	PAPER

Please find below and/or attached an Office communication concerning this application or proceeding.

The time period for reply, if any, is set in the attached communication.

PTOL-90A (Rev. 04/07)

Office Action Summary	Application No.	Applicant(s)	
	10/560,262	ZATLOUKAL ET AL.	
	Examiner	Art Unit	
	DANIEL WALSH	2887	

-- The MAILING DATE of this communication appears on the cover sheet with the correspondence address --

Period for Reply

A SHORTENED STATUTORY PERIOD FOR REPLY IS SET TO EXPIRE 3 MONTH(S) OR THIRTY (30) DAYS, WHICHEVER IS LONGER, FROM THE MAILING DATE OF THIS COMMUNICATION.

- Extensions of time may be available under the provisions of 37 CFR 1.136(a). In no event, however, may a reply be timely filed after SIX (6) MONTHS from the mailing date of this communication.
- If NO period for reply is specified above, the maximum statutory period will apply and will expire SIX (6) MONTHS from the mailing date of this communication.
- Failure to reply within the set or extended period for reply will, by statute, cause the application to become ABANDONED (35 U.S.C. § 133). Any reply received by the Office later than three months after the mailing date of this communication, even if timely filed, may reduce any earned patent term adjustment. See 37 CFR 1.704(b).

Status

1)☒ Responsive to communication(s) filed on 3-24-10.

2a)☒ This action is **FINAL**. 2b)☐ This action is non-final.

3)☐ Since this application is in condition for allowance except for formal matters, prosecution as to the merits is closed in accordance with the practice under *Ex parte Quayle*, 1935 C.D. 11, 453 O.G. 213.

Disposition of Claims

4)☒ Claim(s) 1-40 is/are pending in the application.

4a) Of the above claim(s) _____ is/are withdrawn from consideration.

5)☐ Claim(s) _____ is/are allowed.

6)☒ Claim(s) 1-40 is/are rejected.

7)☐ Claim(s) _____ is/are objected to.

8)☐ Claim(s) _____ are subject to restriction and/or election requirement.

Application Papers

9)☐ The specification is objected to by the Examiner.

10)☐ The drawing(s) filed on _____ is/are: a)☐ accepted or b)☐ objected to by the Examiner.

Applicant may not request that any objection to the drawing(s) be held in abeyance. See 37 CFR 1.85(a).

Replacement drawing sheet(s) including the correction is required if the drawing(s) is objected to. See 37 CFR 1.121(d).

11)☐ The oath or declaration is objected to by the Examiner. Note the attached Office Action or form PTO-152.

Priority under 35 U.S.C. § 119

12)☐ Acknowledgment is made of a claim for foreign priority under 35 U.S.C. § 119(a)-(d) or (f).

a)☐ All b)☐ Some * c)☐ None of:

1.☐ Certified copies of the priority documents have been received.

2.☐ Certified copies of the priority documents have been received in Application No. _____.

3.☐ Copies of the certified copies of the priority documents have been received in this National Stage application from the International Bureau (PCT Rule 17.2(a)).

* See the attached detailed Office action for a list of the certified copies not received.

Attachment(s)

1) ☒ Notice of References Cited (PTO-892)
2) ☐ Notice of Draftsperson's Patent Drawing Review (PTO-948)
3) ☐ Information Disclosure Statement(s) (PTO/SB/08) Paper No(s)/Mail Date _____.
4) ☐ Interview Summary (PTO-413) Paper No(s)/Mail Date. _____ .
5) ☐ Notice of Informal Patent Application
6) ☐ Other: _____.

DETAILED ACTION

Claim Rejections - 35 USC § 103

1. The following is a quotation of 35 U.S.C. 103(a) which forms the basis for all obviousness rejections set forth in this Office action:

> (a) A patent may not be obtained though the invention is not identically disclosed or described as set forth in section 102 of this title, if the differences between the subject matter sought to be patented and the prior art are such that the subject matter as a whole would have been obvious at the time the invention was made to a person having ordinary skill in the art to which said subject matter pertains. Patentability shall not be negatived by the manner in which the invention was made.

2. Claims 1-40 are rejected under 35 U.S.C. 103(a) as being unpatentable over by Zalewski et al (US 6,771,981).

Re Claim 1, Zalewski discloses a mobile station 4 having a radio frequency component 18 that is a known component of mobile phones, which is used to transmit and receive calls and messages using radio frequencies in a radio communication network, such a GSM network (col 6, lines 65-col 7, line3). A cover 100 is coupled to the mobile station 4 (col 7, lines 58-62). Such disclosure of a radio frequency component 18 teaches a component of a mobile communication device to output a first data, and the component being also equipped to facilitate a user in communicating with a user of another communication device, with the communication being facilitated at least in part over a wireless network. Zalewski discloses that a user may use mobile station 104 to send request for room SMS or the like to a central reservation site to reserve a hotel room. Central reservation site may send return SMS or the like comprising with room number, ID code, directions and other information (col 16, lines 35-42). Such disclosure teaches facilitating a user in providing an instruction to a component of a mobile communication device to output a first data. User may then proceed directly to room bypassing desk clerk. User then

may place mobile station close to door lock which comprises an interrogator. Lock interrogates cover 100 and the cover responds with code received from central reservation site. Thus door is unlocked (col 16, lines 42-47). Such disclosure teaches the output emulating an output of the first data by an active RFID transponder, and in response to the providing an instruction, outputting the first data in the form of a radio frequency signal, the outputting emulating output of the first data by an active transponder. Since the cover 100 responds to the interrogation of the door lock, the cover 100 is monitoring for proximal presence of the RFID reader.

Re the newly added limitations that the mobile communications device receives an instruction to transmit a first data to an RFID reader, as the first data is transmitted, it is interpreted that it is transmitted in response to an instruction, so as to know when the transmit the data, and what data to transmits (door lock 820 has an interrogator which instructs the device, as an example of receiving an instruction).

Re the newly added limitation of switching a transceiver of the mobile communications devices from a first state to a second state (first state outputting voice calls and second state outputting RFID signals in a format employed by a reader), though Zalewski et al. is silent to switching modes of a transceiver, the Examiner notes that Zalewski et al. teaches RFID and voice communication enabled by the device. Therefore, it would have been obvious to one of ordinary skill in the art to have circuitry/elements/processing units to perform such communications, as is conventional in the art. As the transponder of the device has circuitry to communicate with an interrogator, this is broadly interpreted as circuitry/elements, and it is well known and conventional in the art that the telephone for voice communication also has processing units/circuitry for voice communication. Therefore, it would have been obvious to

one of ordinary skill in the art, that such components/circuitry devices/phone including cover, etc. (RFID components and voice components for RFID and voice communication by the device) together are interpreted as the "transceiver" of the device (means to send and receive). Therefore, switching between elements to switch modes broadly reads on the claim, as using the device as a phone or using it for RFID communication is interpreted as different modes of the transceiver/communications circuitry/device. The Examiner notes that the different communication (RFID and voice) are understood to take place in different frequency ranges, as known in the art. Further, (col 4, lines 53+) Zalewski teaches active and passive modes, which can include controlling the central processing unit of the mobile unit. Therefore, as discussed above, the RFID functionality is interpreted as being tied to the mobile device, and its processor, and therefore separate outputs of a shared device, with shared processing, can broadly be interpreted as switching modes of the transceiver, as both wireless outputs are tied/linked/controlled by the same central processing/circuitry.

Re claim 2, as discussed above, the circuitry/elements for each of RFID communication and telephone communication are interpreted to read on the first and second signal processing units, since the Examiner notes it would have been obvious that the output of voice and RFID signals can be interpreted as signal processing units processing the signals (as the RFID provides a RFID signal and the phone provides a voice call/signal, and therefore these components of the transceiver are interpreted as signal processing units generating the corresponding signals. It would have been obvious that data is coupled to the transmission path (via RFID or voice), based on which mode/unit is used (since that mode/unit is the one communicating data for the desired means of communication).

Re claims 3, 4, 15-17, 22-24 and 35-37: Zalewski discloses a hotel door key.

Re claims 5 and 25: Zalewski further discloses that by means of a mobile station equipped with a suitable application module the user can make payments in a shop using his/her credit account (col 5, lines 35-40).

Re claim 6, the Examiner notes that it would have been obvious to one of ordinary skill in the art that the device, as it has a plurality of data, facilitates the user in selecting data, such as discussed above, in order to help the user communicate data.

Re claim 7, "facilitating provision" is very broad, and can be interpreted as the data getting to the device, as discussed above, for example.

Re claim 8, as data is output to the reader, it is interpreted as a reader format (compatible), and therefore a signaling attribute would be compatible as well, and be obvious to include in order to have a compatible signal.

Re claim 9, as discussed above, different types of data can be communicated, and therefore different data (first and second) are interpreted as possible. The Examiner notes that RFID data output is data, and therefore can broadly be read as data that can correspond to a passive tag, such as the example when the door is interrogating for a key. Further, the Examiner notes that data itself, can be data from a passive or active tag, in the sense of raw data, and therefore, the Examiner notes that the data output by a passive or even an active tag, need not be any different (an active and passive tag can both output same data).

Re claim 10, the limitations have been discussed above, wherein an interrogation/probing signal is sensed.

Re claim 11, the Examiner notes that the same data can be output (at different times, such as when purchases/access are being attempted at different times) and that as a RFID tag data is being output is interpreted to emulate that of a passive tag (where data is raw data). Further, different data at different times can also read on the claimed limitations. Re claims 12, 20, 32 and 40: Zalewski shows in Fig. 6 a wireless mobile phone 104.

Re claims 13, 14, 18, 19, 21, 26-31, 33, 34, 38 and 39, these limitations have been discussed above. The Examiner notes that it is understood (FIG. 2A+) that circuitry/elements include a storage medium to control operation of the device, as an obvious expedient to control how the device operates, and a processor to actually perform the steps, as known in the art for electronic components/systems.

3. Claims 1-40 are rejected under 35 U.S.C. 103(a) as being unpatentable over by Zalewski et al (US 6,771,981), as discussed above, in view of Perttila et al. (US 20040087273).

Re Claim 1, Zalewski discloses a mobile station 4 having a radio frequency component 18 that is a known component of mobile phones, which is used to transmit and receive calls and messages using radio frequencies in a radio communication network, such a GSM network (col 6, lines 65-col 7, line3). A cover 100 is coupled to the mobile station 4 (col 7, lines 58-62). Such disclosure of a radio frequency component 18 teaches a component of a mobile communication device to output a first data, and the component being also equipped to facilitate a user in communicating with a user of another communication device, with the communication being facilitated at least in part over a wireless network. Zalewski discloses that a user may use mobile station 104 to send request for room SMS or the like to a central reservation site to reserve a hotel room. Central reservation site may send return SMS or the like comprising with room

number, ID code, directions and other information (col 16, lines 35-42). Such disclosure teaches facilitating a user in providing an instruction to a component of a mobile communication device to output a first data. User may then proceed directly to room bypassing desk clerk. User then may place mobile station close to door lock which comprises an interrogator. Lock interrogates cover 100 and the cover responds with code received from central reservation site. Thus door is unlocked (col 16, lines 42-47). Such disclosure teaches the output emulating an output of the first data by an active RFID transponder, and in response to the providing an instruction, outputting the first data in the form of a radio frequency signal, the outputting emulating output of the first data by an active transponder. Since the cover 100 responds to the interrogation of the door lock, the cover 100 is monitoring for proximal presence of the RFID reader.

Re the newly added limitations that the mobile communications device receives an instruction to transmit a first data to an RFID reader, as the first data is transmitted, it is interpreted that it is transmitted in response to an instruction, so as to know when the transmit the data, and what data to transmits (door lock 820 has an interrogator which instructs the device, as an example of receiving an instruction).

Re the newly added limitation of switching a transceiver of the mobile communications devices from a first state to a second state (first state outputting voice calls and second state outputting RFID signals in a format employed by a reader), though Zalewski et al. is silent to switching modes of a transceiver, the Examiner notes that Zalewski et al. teaches separate RFID and voice communication enabled by the device. Therefore, it would have been obvious to one of ordinary skill in the art to have circuitry/elements/processing units to perform such communications, as is conventional in the art. As the transponder of the device has circuitry to

communicate with an interrogator, this is broadly interpreted as circuitry/elements, and it is well known and conventional in the art that the telephone for voice communication also has processing units/circuitry for voice communication. Therefore, it would have been obvious to one of ordinary skill in the art, that such components/circuitry devices/phone including cover, etc. (RFID components and voice components for RFID and voice communication by the device) together are interpreted as the "transceiver" of the device (means to send and receive). Therefore, switching between elements to switch modes broadly reads on the claim, as using the device as a phone or using it for RFID communication is interpreted as different modes of the transceiver. The Examiner notes that the different communication (RFID and voice) are understood to take place in different frequency ranges, as known in the art. Further, (col 4, lines 53+) Zalewski teaches active and passive modes, which can include controlling the central processing unit of the mobile unit. Therefore, as discussed above, the RFID functionality is interpreted as being tied to the mobile device, and its processor, and therefore separate outputs of a shared device, with shared processing, can broadly be interpreted as switching modes of the transceiver, as both wireless outputs are tied/linked/controlled by the same central processing/circuitry.

Zalewski is silent to explicitly reciting changing a transceiver mode/sharing a transceiver. Perttila et al. teaches such limitations (paragraph [0116]), where the Examiner has interpreted the teachings to support that the mobile devices transceiver can be used for voice (to connect the mobile device to the network) as well as to connect to the RFID reader. It's understood by the Examiner that Perttila et al. means a larger communications network as they indicate higher frequency signals would be used making it possible but difficult to combine

At the time the invention was made, it would have been obvious to one of ordinary skill in the art to combine the teachings of Zalewski with those of Perttila et al.

One would have been motivated to do this to reduce costs/amount of parts, etc.

Re claim 2, as discussed above, the circuitry/elements for each of RFID communication and telephone communication are interpreted to read on the first and second signal processing units, since the Examiner notes it would have been obvious that the output of voice and RFID signals can be interpreted as signal processing units processing the signals (as the RFID provides a RFID signal and the phone provides a voice call/signal, and therefore these components of the transceiver are interpreted as signal processing units generating the corresponding signals. It would have been obvious that data is coupled to the transmission path (via RFID or voice), based on which mode/unit is used (since that mode/unit is the one communicating data for the desired means of communication).

Re claims 12, 20, 32 and 40: Zalewski shows in Fig. 6 a wireless mobile phone 104.

Re claims 3, 4, 15-17, 22-24 and 35-37: Zalewski discloses a hotel door key.

Re claims 5 and 25: Zalewski further discloses that by means of a mobile station equipped with a suitable application module the user can make payments in a shop using his/her credit account (col 5, lines 35-40).

Re claim 6, the Examiner notes that it would have been obvious to one of ordinary skill in the art that the device, as it has a plurality of data, facilitates the user in selecting data, such as discussed above, in order to help the user communicate data.

Re claim 7, "facilitating provision" is very broad, and can be interpreted as the data getting to the device, as discussed above, for example.

Re claim 8, as data is output to the reader, it is interpreted as a reader format (compatible), and therefore a signaling attribute would be compatible as well, and be obvious to include in order having a compatible signal.

Re claim 9, as discussed above, different types of data can be communicated, and therefore different data (first and second) are interpreted as possible. The Examiner notes that RFID data output is data, and therefore can broadly be read as data that can correspond to a passive tag, such as the example when the door is interrogating for a key. Further, the Examiner notes that data itself, can be data from a passive or active tag, in the sense of raw data, and therefore, the Examiner notes that the data output by a passive or even an active tag, need not be any different (an active and passive tag can both output same data).

Re claim 10, the limitations have been discussed above, wherein an interrogation/probing signal is sensed.

Re claim 11, the Examiner notes that the same data can be output (at different times, such as when purchases/access are being attempted at different times) and that as a RFID tag data is being output is interpreted to emulate that of a passive tag (where data is raw data). Further, different data at different times can also read on the claimed limitations. Re claims 12, 20, 32 and 40: Zalewski shows in Fig. 6 a wireless mobile phone 104.

Re claims 13, 14, 18, 19, 21, 26-31, 33, 34, 38 and 39, these limitations have been discussed above. The Examiner notes that it is understood (FIG. 2A+ of Zalewski) that circuitry/elements include a storage medium to control operation of the device, as an obvious expedient to control how the device operates, and a processor to actually perform the steps, as known in the art for electronic components/systems. Additionally, the Examiner notes that

Perttila et al. teaches such limitations (FIG. 9 and 2B) and also that it is understood that such components are obvious to include to one of ordinary skill in the art for electronic processing of data and communication.

Response to Arguments

4. Applicant's arguments with respect to claims 1-40 have been considered but are moot in view of the new ground(s) of rejection.

The Examiner has broadly interpreted "transceiver" to include circuitry in the device responsible for communicating (whether it RFID or voice). Therefore, the elements of the device responsible for the RIFD and voice communications are interpreted as being part of the transceiver (such as units as per claim 21 for example) which can be switched based on the desired communication means (voice or RFID), and as discussed above, can be tied/linked to a common processor/circuitry.

Further, Perttila et al. teaches sharing a common transceiver, as well.

Additional Remarks

The Examiner notes that the Applicants drawings illustrate the RFID and voice circuitry can be separate hardware/software, and claim 21 claims separate signal processing sections, which be interpreted alternatively, as 2 transceivers. Therefore the Examiner notes that a device that has separate communicating elements can be interpreted as a device with the claimed transceiver switching modes, as the communication elements can be interpreted together as the transceiver (transceiver being the electronics of the device for communication). Therefore, with

regarding to switching modes of the transceiver, the Examiner notes that the communication sections of the phone can be interpreted as the transceiver, as switching between signal processing elements to switch modes broadly reads on the claim. Further, the Examiner notes that the mobile device itself can broadly be interpreted to function as a transceiver via the internal components, and therefore and therefore the internals of the device for communication can be interpreted as the transceiver of the device.

Conclusion

1. Applicant's amendment necessitated the new ground(s) of rejection presented in this Office action. Accordingly, **THIS ACTION IS MADE FINAL**. See MPEP § 706.07(a). Applicant is reminded of the extension of time policy as set forth in 37 CFR 1.136(a).

A shortened statutory period for reply to this final action is set to expire THREE MONTHS from the mailing date of this action. In the event a first reply is filed within TWO MONTHS of the mailing date of this final action and the advisory action is not mailed until after the end of the THREE-MONTH shortened statutory period, then the shortened statutory period will expire on the date the advisory action is mailed, and any extension fee pursuant to 37 CFR 1.136(a) will be calculated from the mailing date of the advisory action. In no event, however, will the statutory period for reply expire later than SIX MONTHS from the date of this final action.

Any inquiry concerning this communication or earlier communications from the examiner should be directed to DANIEL WALSH whose telephone number is (571)272-2409. The examiner can normally be reached on M-F 9am-7pm.

If attempts to reach the examiner by telephone are unsuccessful, the examiner's supervisor, Steven Paik can be reached on 571-272-2404. The fax phone number for the organization where this application or proceeding is assigned is 571-273-8300.

Information regarding the status of an application may be obtained from the Patent Application Information Retrieval (PAIR) system. Status information for published applications may be obtained from either Private PAIR or Public PAIR. Status information for unpublished applications is available through Private PAIR only. For more information about the PAIR system, see http://pair-direct.uspto.gov. Should you have questions on access to the Private PAIR system, contact the Electronic Business Center (EBC) at 866-217-9197 (toll-free). If you would like assistance from a USPTO Customer Service Representative or access to the automated information system, call 800-786-9199 (IN USA OR CANADA) or 571-272-1000.

/DANIEL WALSH/
Primary Examiner, Art Unit 2887

Notice of References Cited	Application/Control No. 10/560,262	Applicant(s)/Patent Under Reexamination ZATLOUKAL ET AL.	
	Examiner DANIEL WALSH	Art Unit 2887	Page 1 of 3

U.S. PATENT DOCUMENTS

*		Document Number Country Code-Number-Kind Code	Date MM-YYYY	Name	Classification
*	A	US-5,448,620 A	09-1995	Gershkovich et al.	455/552.1
*	B	US-5,793,843 A	08-1998	Morris, Walker C.	455/422.1
*	C	US-6,164,551 A	12-2000	Altwasser, Richard	235/492
*	D	US-2003/0158785 A1	08-2003	Erca, Christopher J.	705/26
*	E	US-2004/0127256 A1	07-2004	Goldthwaite et al.	455/558
*	F	US-6,771,981 B1	08-2004	Zalewski et al.	455/557
*	G	US-2004/0263319 A1	12-2004	Huomo, Heikki	340/010.2
*	H	US-2006/0022802 A1	02-2006	Bridgelall, Raj	340/010.33
*	I	US-2006/0052055 A1	03-2006	Rowse et al.	455/041.1
*	J	US-2006/0111053 A1	05-2006	Wu et al.	455/090.3
*	K	US-2006/0116127 A1	06-2006	Wilhoite et al.	455/442
*	L	US-7,110,792 B2	09-2006	Rosenberg, Einar	455/558
*	M	US-2006/0237528 A1	10-2006	Bishop et al.	235/380

FOREIGN PATENT DOCUMENTS

*		Document Number Country Code-Number-Kind Code	Date MM-YYYY	Country	Name	Classification
	N					
	O					
	P					
	Q					
	R					
	S					
	T					

NON-PATENT DOCUMENTS

*		Include as applicable: Author, Title Date, Publisher, Edition or Volume, Pertinent Pages)
	U	
	V	
	W	
	X	

*A copy of this reference is not being furnished with this Office action. (See MPEP § 707.05(a).)
Dates in MM-YYYY format are publication dates. Classifications may be US or foreign.

Notice of References Cited	Application/Control No. 10/560,262	Applicant(s)/Patent Under Reexamination ZATLOUKAL ET AL.	
	Examiner DANIEL WALSH	Art Unit 2887	Page 2 of 3

U.S. PATENT DOCUMENTS

*		Document Number Country Code-Number-Kind Code	Date MM-YYYY	Name	Classification
*	A	US-2006/0280149 A1	12-2006	Kuhl et al.	370/338
*	B	US-2007/0037605 A1	02-2007	Logan, James D.	455/567
*	C	US-7,245,997 B2	07-2007	Kitao et al.	701/29
*	D	US-2007/0197261 A1	08-2007	Humbel, Roger Marcel	455/558
*	E	US-7,283,044 B2	10-2007	Bandy, William R.	340/505
*	F	US-2007/0274242 A1	11-2007	Lamacraft et al.	370/310
*	G	US-2007/0263595 A1	11-2007	Charrat, Bruno	370/351
*	H	US-2007/0293202 A1	12-2007	Moshir et al.	455/414.2
*	I	US-2007/0286171 A1	12-2007	Guan, Huapeng	370/356
*	J	US-7,324,476 B2	01-2008	Agrawal et al.	370/329
*	K	US-2008/0018433 A1	01-2008	Pitt-Pladdy, Glen	340/10.4
*	L	US-7,375,616 B2	05-2008	Rowse et al.	340/10.1
*	M	US-7,502,615 B2	03-2009	Wilhoite et al.	455/442

FOREIGN PATENT DOCUMENTS

*		Document Number Country Code-Number-Kind Code	Date MM-YYYY	Country	Name	Classification
	N					
	O					
	P					
	Q					
	R					
	S					
	T					

NON-PATENT DOCUMENTS

*		Include as applicable: Author, Title Date, Publisher, Edition or Volume, Pertinent Pages)
	U	
	V	
	W	
	X	

*A copy of this reference is not being furnished with this Office action. (See MPEP § 707.05(a).)
Dates in MM-YYYY format are publication dates. Classifications may be US or foreign.

Notice of References Cited	Application/Control No. 10/560,262	Applicant(s)/Patent Under Reexamination ZATLOUKAL ET AL.	
	Examiner DANIEL WALSH	Art Unit 2887	Page 3 of 3

U.S. PATENT DOCUMENTS

*		Document Number Country Code-Number-Kind Code	Date MM-YYYY	Name	Classification
*	A	US-2009/0090783 A1	04-2009	Killian et al.	235/492
*	B	US-2009/0170519 A1	07-2009	WILHOITE et al.	455/436
*	C	US-2009/0221232 A1	09-2009	Estevez et al.	455/41.1
*	D	US-2009/0243810 A1	10-2009	Pendlebury et al.	340/10.4
*	E	US-2009/0291634 A1	11-2009	Saarisalo, Mikko	455/41.1
*	F	US-2010/0026454 A1	02-2010	Rowse et al.	340/10.1
*	G	US-2004/0087273	05-2004	Perttila et al.	455/041.2
	H	US-			
	I	US-			
	J	US-			
	K	US-			
	L	US-			
	M	US-			

FOREIGN PATENT DOCUMENTS

*		Document Number Country Code-Number-Kind Code	Date MM-YYYY	Country	Name	Classification
	N					
	O					
	P					
	Q					
	R					
	S					
	T					

NON-PATENT DOCUMENTS

*		Include as applicable: Author, Title Date, Publisher, Edition or Volume, Pertinent Pages)
	U	
	V	
	W	
	X	

*A copy of this reference is not being furnished with this Office action. (See MPEP § 707.05(a).)
Dates in MM-YYYY format are publication dates. Classifications may be US or foreign.

Index of Claims	Application/Control No.	Applicant(s)/Patent Under Reexamination
	10560262	ZATLOUKAL ET AL.
	Examiner	**Art Unit**
	KUMIKO C KOYAMA	2887

✓	Rejected	-	Cancelled	N	Non-Elected	A	Appeal
=	Allowed	÷	Restricted	I	Interference	O	Objected

☐ Claims renumbered in the same order as presented by applicant ☐ CPA ☐ T.D. ☐ R.1.47

CLAIM		DATE								
Final	Original	02/28/2009	08/15/2009	12/20/2009	06/11/2010					
	1	✓	✓	✓	✓					
	2	✓	✓	✓	✓					
	3	✓	✓	✓	✓					
	4	✓	✓	✓	✓					
	5	✓	✓	✓	✓					
	6	✓	✓	✓	✓					
	7	✓	✓	✓	✓					
	8	✓	✓	✓	✓					
	9	✓	✓	✓	✓					
	10	✓	✓	✓	✓					
	11	✓	✓	✓	✓					
	12	✓	✓	✓	✓					
	13	✓	✓	✓	✓					
	14	✓	✓	✓	✓					
	15	✓	✓	✓	✓					
	16	✓	✓	✓	✓					
	17	✓	✓	✓	✓					
	18	✓	✓	✓	✓					
	19	✓	✓	✓	✓					
	20	✓	✓	✓	✓					
	21	✓	✓	✓	✓					
	22	✓	✓	✓	✓					
	23	✓	✓	✓	✓					
	24	✓	✓	✓	✓					
	25	✓	✓	✓	✓					
	26	✓	✓	✓	✓					
	27	✓	✓	✓	✓					
	28	✓	✓	✓	✓					
	29	✓	✓	✓	✓					
	30	✓	✓	✓	✓					
	31	✓	✓	✓	✓					
	32	✓	✓	✓	✓					
	33	✓	✓	✓	✓					
	34	✓	✓	✓	✓					
	35	✓	✓	✓	✓					
	36	✓	✓	✓	✓					

Index of Claims	Application/Control No.	Applicant(s)/Patent Under Reexamination
	10560262	ZATLOUKAL ET AL.
	Examiner	**Art Unit**
	KUMIKO C KOYAMA	2887

✓	Rejected	-	Cancelled	N	Non-Elected	A	Appeal
=	Allowed	÷	Restricted	I	Interference	O	Objected

☐ Claims renumbered in the same order as presented by applicant ☐ CPA ☐ T.D. ☐ R.1.47

CLAIM		DATE								
Final	Original	02/28/2009	08/15/2009	12/20/2009	06/11/2010					
	37	✓	✓	✓	✓					
	38	✓	✓	✓	✓					
	39	✓	✓	✓	✓					
	40	✓	✓	✓	✓					
	41	-	-	-						
	42	-	-	-						
	43	-	-	-						
	44	-	-	-						
	45	-	-	-						
	46	-	-	-						
	47	-	-	-						
	48	-	-	-						
	49	-	-	-						
	50	-	-	-						
	51	-	-	-						
	52	-	-	-						
	53	-	-	-						
	54	-	-	-						
	55	-	-	-						
	56	-	-	-						
	57	-	-	-						
	58	-	-	-						
	59	-	-	-						
	60	-	-	-						

Search Notes	Application/Control No.	Applicant(s)/Patent Under Reexamination
	10560262	ZATLOUKAL ET AL.
	Examiner	**Art Unit**
	KUMIKO C KOYAMA	2887

SEARCHED

Class	Subclass	Date	Examiner
235	375, 380, 492	02/28/2009	KCK
455	557	02/28/2009	KCK
340	505, 539.1, 539.11	02/28/2009	KCK
Updated	Search	08/15/2009	KCK
Updated	Search	12/20/2009	KCK
340	10.1,10.3,10.5,572.1	6-11-10	dw

SEARCH NOTES

Search Notes	Date	Examiner
East Search	02/28/2009	KCK
Updated Search	08/15/2009	KCK
Updated East Search	12/20/2009	KCK
class 340 455 keyword search	6-11-10	dw
consulted L. West class 455	6-11-10	dw
consulted E. Halloway class 340	6-10-10	dw

INTERFERENCE SEARCH

Class	Subclass	Date	Examiner

EAST Search History

EAST Search History (Prior Art)

Ref #	Hits	Search Query	DBs	Default Operator	Plurals	Time Stamp
S1	586	(telephone or phone) with (communicat$4 or transfer$4 or send $4 or output$4) with (rfid or "radio frequency") near3 (reader or interrogator)	US-PGPUB; USPAT; EPO; JPO	OR	OFF	2010/06/09 15:22
S2	335	S1 and ("340"/$.ccls. "455"/$.ccls.)	US-PGPUB; USPAT; EPO; JPO	OR	OFF	2010/06/09 15:23
S3	0	(telephone or phone) with (state or mode) with (communicat$4 or transfer$4 or send$4 or output$4) with (rfid or "radio frequency") near3 (reader or interrogator) same (voice or talk$4)	US-PGPUB; USPAT; EPO; JPO	OR	OFF	2010/06/09 15:24
S4	41	(telephone or phone) with (state or mode) with (communicat$4 or transfer$4 or send$4 or output$4) with (rfid or "radio frequency") same (voice or talk$4)	US-PGPUB; USPAT; EPO; JPO	OR	OFF	2010/06/09 15:26
S5	15	(telephone or phone) with (state or mode) with (communicat$4 or transfer$4 or send$4 or output$4) with (rfid or "radio frequency") near2 reader	US-PGPUB; USPAT; EPO; JPO	OR	OFF	2010/06/09 16:24
S6	1	10/560,262	US-PGPUB; USPAT; EPO; JPO	OR	OFF	2010/06/09 16:36
S7	51	(phone or telephone) with (embedd $4) with rfid near3 tag	US-PGPUB; USPAT; EPO; JPO	OR	OFF	2010/06/09 16:51
S8	1	10/560,262	US-PGPUB; USPAT; EPO; JPO	OR	OFF	2010/06/09 17:03
S9	20	(telephone or phone) with plurality with rfid with (tag or functionality)	US-PGPUB; USPAT; EPO; JPO	OR	OFF	2010/06/09 17:11
S10	2	(telephone or phone) with plurality with rfid with (tag or functionality) with (embed$4 or intergrat$4)	US-PGPUB; USPAT; EPO; JPO	OR	OFF	2010/06/09 17:11
S11	58	(telephone or phone or pda) with rfid with (tag or functionality) with (embed$4 or intergrat$4)	US-PGPUB; USPAT; EPO; JPO	OR	OFF	2010/06/09 17:12
S12	6	(telephone or phone or pda) with rfid with (tag or functionality) with (embed$4 or intergrat$4) same (select$4 or pick$4 or choos$4) with (RFID)	US-PGPUB; USPAT; EPO; JPO	OR	OFF	2010/06/09 17:12

S13	66	(telephone or phone or pda) with (pick$4 or select$4) with rfid with (tag or functionality)	US-PGPUB; USPAT; EPO; JPO	OR	OFF	2010/06/09 17:13
S14	2	("6771981" "6164551").pn.	US-PGPUB; USPAT; EPO; JPO	OR	OFF	2010/06/09 17:18
S15	2	"2004114239".pn.	US-PGPUB; USPAT; EPO; JPO	OR	OFF	2010/06/09 17:27
S16	1	"2004263319".pn.	US-PGPUB; USPAT; EPO; JPO	OR	OFF	2010/06/09 17:28
S17	1	"20040263319".pn.	US-PGPUB; USPAT; EPO; JPO	OR	OFF	2010/06/09 17:28
S18	1	"20050116050".pn.	US-PGPUB; USPAT; EPO; JPO	OR	OFF	2010/06/09 17:32
S19	2	("6421347" "5473318").pn.	US-PGPUB; USPAT; EPO; JPO	OR	OFF	2010/06/09 17:51
S20	0	(phone or telephone) with (mimic$4 or emualt$4) with (rfid or transponder or "radio frequency") with plurality	US-PGPUB; USPAT; EPO; JPO	OR	OFF	2010/06/10 11:56
S21	0	(phone or telephone or portable or handheld) with (mimic$4 or emulat $4) with (rfid or transponder or "radio frequency") with plurality	US-PGPUB; USPAT; EPO; JPO	OR	OFF	2010/06/10 11:57
S22	23	(phone or telephone or portable or handheld) with (mimic$4 or emulat $4) with (rfid or transponder or "radio frequency")	US-PGPUB; USPAT; EPO; JPO	OR	OFF	2010/06/10 11:57
S23	86	"340"/$.ccls. and (RFID) with (emulat $4 or embed$4) with (portable or handheld or phone or telephone)	US-PGPUB; USPAT; EPO; JPO	OR	OFF	2010/06/10 14:55
S24	18	kuhl.in. and carmen.in.	US-PGPUB; USPAT; EPO; JPO	OR	OFF	2010/06/10 15:00
S25	4	("2006/0280149").URPN.	USPAT	OR	OFF	2010/06/10 15:03
S26	91	("340"/$.ccls. "235"/$.ccls.) and (phone or telephone) same (rfid or "radio frequency" or transponder) same (mimic$4 or emulat$4 or communicat$4) with plurality	USPAT	OR	OFF	2010/06/10 15:07
S27	1426	("340"/$.ccls. "235"/$.ccls.) and (phone or telephone) same (rfid or "radio frequency" or transponder) same (mimic$4 or emulat$4 or communicat$4)	USPAT	OR	OFF	2010/06/10 15:07

S28	579	("340"/$.ccls. "455"/$.ccls.) and (phone or telephone) with (switch$4 or activat$4 or select$3 or pick$4 or choos$4) with (rfid or "radio frequency" or transponder)	USPAT	OR	OFF	2010/06/10 15:11
S29	580	("340"/$.ccls. "455"/$.ccls.) and (phone or telephone) with (switch$4 or activat$4 or emulat$4 or select$3 or pick$4 or choos$4) with (rfid or "radio frequency" or transponder)	USPAT	OR	OFF	2010/06/10 15:11
S30	94	("340"/$.ccls. "455"/$.ccls.) and (phone or telephone) with (switch$4 or activat$4 or emulat$4 or select$3 or pick$4 or choos$4) with (rfid or transponder)	USPAT	OR	OFF	2010/06/10 15:19
S31	1261	("235"/$.ccls. "340"/$.ccls. "455"/$.ccls.) and (phone or telephone) with (switch$4 or activat$4 or emulat$4 or select$3 or pick$4 or choos$4) with (rfid or transponder or transceiver)	USPAT	OR	OFF	2010/06/10 15:46
S32	534	("235"/$.ccls. "340"/$.ccls. "455"/$.ccls.) and (phone or telephone) with (switch$4 or activat$4 or emulat$4 or select$3 or pick$4 or choos$4) near5 (rfid or transponder or transceiver)	USPAT	OR	OFF	2010/06/10 15:46
S33	454	S32 not S29	USPAT	OR	OFF	2010/06/10 15:47
S34	8395755	S33 adn @pd>"1995"	USPAT	OR	OFF	2010/06/10 15:51
S35	454	S33 and @pd>"1995"	USPAT	OR	OFF	2010/06/10 15:51
S36	454	S33 and @pd>"01011995"	USPAT	OR	OFF	2010/06/10 15:51
S37	454	S33 and pd>"01011995"	USPAT	OR	OFF	2010/06/10 15:52
S38	454	S33 and ad>"01011995"	USPAT	OR	OFF	2010/06/10 15:52
S39	454	S33 and pd>"1995"	USPAT	OR	OFF	2010/06/10 15:52
S40	454	S33 and pd>"19950101"	USPAT	OR	OFF	2010/06/10 15:53
S41	388	S33 and @pd>"19950101"	USPAT	OR	OFF	2010/06/10 15:53
S42	304	S33 and @pd>"19990101"	USPAT	OR	OFF	2010/06/10 15:53
S43	269	S33 and @pd>"20000101"	USPAT	OR	OFF	2010/06/10 15:53

S44	54	("340"/$.ccls. "455"/$.ccls.) and (telephone or phone) with (transponder or rfid) with (select$4 or pick$4 or activat$4 or emulat$4) and @pd>"20000101"	USPAT	OR	OFF	2010/06/10 15:54
S45	58	("340"/$.ccls. "455"/$.ccls.) and (telephone or phone) with (transponder or rfid) with (select$4 or pick$4 or activat$4 or emulat$4) and @pd>"19950101"	USPAT	OR	OFF	2010/06/10 15:55
S46	0	S45 not S30	USPAT	OR	OFF	2010/06/10 15:55
S47	68	("340"/$.ccls. "455"/$.ccls.) and (telephone or phone) with (transponder or rfid) with (select$4 or pick$4 or activat$4 or emulat$4)	USPAT	OR	OFF	2010/06/10 15:55
S48	0	S47 not S30	USPAT	OR	OFF	2010/06/10 15:55
S49	13	("235"/$.ccls.) and (telephone or phone) with (transponder or rfid) with (select$4 or pick$4 or activat$4 or emulat$4)	USPAT	OR	OFF	2010/06/10 15:55
S50	215	("235"/$.ccls. "455"/$.ccls. "340"/$.ccls.) and (telephone or phone) with (transponder or rfid) with (select$4 or pick$4 or activat$4 or emulat$4)	US-PGPUB; USPAT; EPO; JPO	OR	OFF	2010/06/10 15:57
S51	147	S50 not S30	US-PGPUB; USPAT; EPO; JPO	OR	OFF	2010/06/10 16:01
S52	8057	340/10.1,10.3,10.5,572.1.ccls.	US-PGPUB; USPAT; EPO; JPO	OR	OFF	2010/06/10 16:07
S53	56	S52 and (phone or telephone) with (emulat$4 or pick$4 or select$4 or choos$4 or activat$4) with (rfid or transponder or fob)	US-PGPUB; USPAT; EPO; JPO	OR	OFF	2010/06/10 16:07
S54	129	("340"/$.ccls. "455"/$.ccls.) and (phone or telephone) with (equip$4 or embed$4 or consolidat$4 or includ $4 or compris$4) with (rfid or transponder or nfc or contactless) same (swtich$4 or activat$4 or pick $4 or choos$4 or select$4)	US-PGPUB; USPAT; EPO; JPO	OR	OFF	2010/06/10 16:12
S55	35	("340"/$.ccls. "455"/$.ccls.) and (phone or telephone) with (rfid or transponder or nfc or contactless) same (swtich$4 or activat$4 or pick $4 or choos$4 or select$4) same transceiver	US-PGPUB; USPAT; EPO; JPO	OR	OFF	2010/06/10 16:25
S56	69	("340"/$.ccls. "455"/$.ccls.) and (phone or telephone) with (rfid or transponder or nfc or contactless) same (switch$4 or activat$4 or pick $4 or choos$4 or select$4) same transceiver	US-PGPUB; USPAT; EPO; JPO	OR	OFF	2010/06/10 16:26

S57	58	S56 not S30	US-PGPUB; USPAT; EPO; JPO	OR	OFF	2010/06/10 16:26
S58	53	transceiver with (select$4 or chang $4 or switch$4) same (phone or telephone) same (rfid or transponder)	US-PGPUB; USPAT; EPO; JPO	OR	OFF	2010/06/10 16:34
S59	33	S58 not S57	US-PGPUB; USPAT; EPO; JPO	OR	OFF	2010/06/10 16:34
S60	593	("340"/$.ccls. "455"/$.ccls.) and (phone or telephone) same (transmitter or transceiver) same (rfid or transponder)	US-PGPUB; USPAT; EPO; JPO	OR	OFF	2010/06/10 19:54
S61	154	("340"/$.ccls. "455"/$.ccls.) and (phone or telephone) same (transmitter or transceiver) same (rfid or transponder) same (switch$4 or select$3 or pick$4 or choos$3)	US-PGPUB; USPAT; EPO; JPO	OR	OFF	2010/06/10 19:55
S62	59	("340"/$.ccls. "455"/$.ccls.) and (phone or telephone) same (transmitter or transceiver) same (rfid or transponder or tag) same (switch$4 or select$3 or pick$4 or choos$3) same (read$4 or interrogat $4)	US-PGPUB; USPAT; EPO; JPO	OR	OFF	2010/06/11 10:10
S63	1	10/560,262	US-PGPUB; USPAT; EPO; JPO	OR	OFF	2010/06/11 10:21
S64	5	"multi-tag emulator"	US-PGPUB; USPAT; EPO; JPO	OR	OFF	2010/06/11 12:11
S65	0	(phone or telephone) same (emulat $4) with (rfid or tag) same (transmitter or transceiver) with (switch$4 or mod$4)	US-PGPUB; USPAT; EPO; JPO	OR	OFF	2010/06/11 12:13
S66	27	(phone or telephone) same (emulat $4) with (rfid or tag) and (transmitter or transceiver or circuit $4 or processor or controller) with (switch$4 or mod$4 or chang$4)	US-PGPUB; USPAT; EPO; JPO	OR	OFF	2010/06/11 12:14
S67	19	("20030192950" | "20050099268" | "20060082470" | "5559501" | "5995019" | "6107910" | "6297737" | "6433671" | "6518993" | "6531957" | "6580358" | "6826473" | "6950009" | "6970070" | "7086587" | "7109865").PN. OR ("7283044").URPN.	US-PGPUB; USPAT; USOCR	OR	OFF	2010/06/11 12:17
S68	3	("20040186768" "20040087273" "7274909").pn.	US-PGPUB; USPAT; USOCR	OR	OFF	2010/06/11 12:23
S69	41	tag near3 emulat$4 and (rfid or transponder) same (Phone or telephone)	US-PGPUB; USPAT; USOCR	OR	OFF	2010/06/11 12:41

S70	18	tag near3 emulat$4 with (mod$4 or switch$4) and (rfid or transponder) same (Phone or telephone)	US-PGPUB; USPAT; USOCR	OR	OFF	2010/06/11 12:43
S71	295	(phone or telephone) same (emulat $4 or mimic$4 or output$4) with (RFID or transponder)	US-PGPUB; USPAT; USOCR	OR	OFF	2010/06/11 12:47
S72	140	(phone or telephone) same (emulat $4 or mimic$4 or output$4) with (RFID or transponder) and (unitary or switch$4 or single or shar$3) with (transceiver or transmitter or circuit $3)	US-PGPUB; USPAT; USOCR	OR	OFF	2010/06/11 12:48
S73	55	S72 and ("340"/$.ccls. "455"/$.ccls.)	US-PGPUB; USPAT; USOCR	OR	OFF	2010/06/11 12:48
S74	55	((phone or telephone) same (emulat $4 or mimic$4 or output$4) with (RFID or transponder) and (unitary or switch$4 or single or shar$3) with (transceiver or transmitter or circuit $3)) and ("340"/$.ccls. "455"/$.ccls.)	US-PGPUB; USPAT; USOCR; EPO; JPO	OR	OFF	2010/06/11 12:50
S75	1	"0416922.3"	US-PGPUB; USPAT; EPO; JPO	OR	OFF	2010/06/11 14:56
S76	37	tag with emulat$4 and (phone or telephone or mobile).ab.	US-PGPUB; USPAT; EPO; JPO	OR	OFF	2010/06/11 15:04
S77	12	tag with emulat$4 and (phone or telephone or mobile).ab. and RFID.ab.	US-PGPUB; USPAT; EPO; JPO	OR	OFF	2010/06/11 15:05
S78	2	("6771981" "6164551").pn.	USPAT	OR	OFF	2010/06/11 15:12

6/11/2010 11:09:03 PM
C:\Documents and Settings\dwalsh1\My Documents\EAST\Workspaces\East Searches\10560262.wsp

IN THE UNITED STATES PATENT AND TRADEMARK OFFICE

In Application of:

Peter Zatloukal

Application No.: 10/560,262

Filed: December 9, 2005

For: EMULATED RADIO FREQUENCY INDENTIFICATION

Examiner: Daniel I. Walsh

Group Art Unit: 2887

Confirmation No.: 3358

Mail Stop Amendment
Commissioner for Patents
PO Box 1450
Alexandria, VA 22313-1450

AMENDMENT

Dear Examiner:

In response to the Office Action mailed December 24, 2009, please amend the above-identified application as follows:

Amendments to the Claims are reflected in the listing of claims which begins on page **2** of this paper.

Remarks/Arguments begin on page **10** of this paper.

Amendments to the Claims:

This listing of claims will replace all prior versions, and listings, of claims in the application:

Listing of Claims:

1. (Currently Amended) A method for providing a radio frequency identification (RFID) comprising:

receiving, by a mobile communications device, ~~facilitating a user in providing~~ an instruction to ~~a component of a mobile communication device to output~~ transmit a first data to a RFID reader;

switching a transceiver of the mobile communications device from a first state to a second state, the transceiver configured to output voice call signals in the first state and to output RFID signals in the second state

~~, said output emulating output of the first data by an RFID transponder of an active type, the component being also equipped to facilitate a user in communicating with a user of another communication device, with the communication being a voice call facilitated at least in part over a wireless network~~; and

~~in response to said providing an instruction,~~ outputting the first data by the ~~component~~ transceiver in the second state, the transceiver outputting the first data as~~in the form of~~ a radio frequency signal in a format~~, said outputting emulating output of the first data~~employed by [[an]]the RFID reader~~transponder of an active type~~.

2. (Currently Amended) The method of claim 1, wherein said ~~component is a~~ transceiver comprises a first signal processing unit configured to process voice call signals and a second signal processing unit configured to process RFID signals, said switching comprising coupling the second signal processing unit to a transmission path of the transceiver.

3. (Currently Amended) The method of claim [[2]]1, wherein said first data comprises a selected one of a security key and an identifier.

4. (Previously Presented) The method of claim 3, wherein said security key comprises a selected one of a garage door key, an exterior door key, an interior door key, and a motor vehicle door key.

5. (Currently Amended) The method of claim [[2]]1, wherein said first data comprises an identifier, and said identifier comprises a selected one of a social security number, a driver's license number, an affinity program account number, and a credit card number.

6. (Original) The method of claim 1, wherein the method further comprises facilitating the user in selecting the first data from a plurality of data using the mobile communication device.

7. (Original) The method of claim 1, wherein the method further comprises facilitating provision of the first data to the mobile communication device.

8. (Currently Amended) The method of claim 7, wherein said facilitating of the provisioning of the data to the mobile communication device includes facilitating provision of at least a signaling attribute associated with the outputting of the data in the format ~~of a radio frequency~~employed by the RFID ~~signal~~reader.

9. (Currently Amended) The method of claim 1, wherein the method further comprises:

monitoring for proximal presence of [[a]]the RFID reader by the mobile communication device; and

on detection of [[a]]the RFID reader by the mobile communication device, outputting by the transceiver a second data ~~in a form of~~as a second radio frequency signal, ~~using the mobile communication device,~~ the outputting emulating output of the second data by a RFID transponder of a passive type.

10. (Previously Presented) The method of claim 9, wherein said monitoring comprises sensing for a probing radio frequency signal of the RFID reader by the mobile communication device.

11. (Original) The method of claim 9, wherein said first and second data are the same data.

12. (Original) The method of claim 1, wherein the mobile communication device is a selected one of a wireless mobile phone and a personal digital assistant equipped with communication capability.

13. (Currently Amended) A method for providing a radio frequency identifier (RFID), comprising:

monitoring for proximal presence of a RFID reader by a mobile communication device, the mobile communication device having a ~~component equipped~~transceiver configured to ~~receive~~ output a RFID signal ~~from~~ to the RFID reader, the ~~component~~ transceiver being also ~~equipped~~ configured to ~~facilitate a user in communicating with a user of another communication device, with the communication being~~output a voice call signal ~~facilitated~~ for transmission at least in part over a wireless network; and

on detection of [[a]]the RFID reader, outputting by the ~~component~~ transceiver a data ~~in a form of~~as a radio frequency signal in a format employed by the RFID reader~~, said outputting emulating outputting of the data by a RFID transponder of a passive type~~.

14. (Previously Presented) The method of claim 13, wherein said monitoring comprises sensing for a probing radio frequency signal of the RFID reader by the mobile communication device.

15. (Original) The method of claim 13, wherein said data comprises a security key.

16. (Original) The method of claim 15, wherein said security key comprises a door key.

17. (Original) The method of claim 16, wherein said door key comprises a selected one of a garage door key, an exterior door key, an interior door key, and a motor vehicle door key.

18. (Original) The method of claim 13, wherein the method further comprises facilitating provision of the data to the mobile communication device.

19. (Currently Amended) The method of claim 18, wherein said facilitating of the provisioning of the data to the mobile communication device[[,]] ~~including~~ includes facilitating provision of at least a signaling attribute associated with the outputting of the data in the format ~~of~~ employed by ~~a radio frequency signal~~the RFID reader.

20. (Original) The method of claim 13, wherein the mobile communication device is a selected of a wireless mobile phone and a personal digital assistant equipped with communication capability.

21. (Currently Amended) A mobile communication device comprising:

a transmitter configured to transmit a radio frequency signal, the transmitter comprising a first signal processing section and a second signal processing section, the first signal processing section configured to output voice call signals in a first radio frequency range and the second signal processing section configured to output RFID signals in a second radio frequency range;

a storage medium to store a first data and instructions to operate the transmitter, the transmitter being operated to switch between the first and second signal processing sections to selectively (a) output a first data as a ~~radio frequency~~RFID signal in a format employed by a RFID reader, in response to a user instruction, ~~said output emulating output of the first data by a radio frequency identifier (RFID) transponder of an active type,~~ and (b) ~~facilitate a user to communicate with another user of another communication device~~output a voice call signal~~, with the communication being a voice call facilitated at least in part over~~for transmission over a wireless network; and

a processor coupled to the transmitter and the storage to execute the instructions.

22. (Original) The device of claim 21, wherein said first data comprises a selected one of a security key and an identifier.

23. (Original) The device of claim 22, wherein said first data comprises a security key, and said security key comprises a door key.

24. (Original) The device of claim 23, wherein said door key comprises a selected one of a garage door key, an exterior door key, an interior door key, and a motor vehicle door key.

25. (Original) The device of claim 22, wherein said first data comprises an identifier, and said identifier comprises a selected one of a social security number, a driver's license number, an affinity program account number, and a credit card number.

26. (Original) The device of claim 21, wherein the instructions are further designed to facilitate the user in selecting the first data from a plurality of data, and instructing said output.

27. (Original) The device of claim 21, wherein the instructions are further designed to facilitate provision of the first data to the mobile communication device.

28. (Original) The device of claim 27, wherein the instructions are further designed to include with said facilitating, provisioning of at least a signaling attribute associated with the outputting of the first data in the form of a radio frequency signal.

29. (Currently Amended) The device of claim 21, wherein the instructions are further designed to

monitor for proximal presence of [[a]]the RFID reader; and

on detection of [[a]]the RFID reader, operate the transceiver to output a second data ~~in a form of~~ as a second ~~radio frequency~~RFID signal~~, emulating output of the second data by a RFID transponder of a passive type~~.

30. (Original) The device of claim 29, wherein the instructions are further designed to sense for a probing radio frequency signal of the RFID reader.

31. (Original) The device of claim 29, wherein said first and second data are the same data.

32. (Previously Presented) The device of claim 21, wherein the mobile communication device is a selected one of a wireless mobile phone and a personal digital assistant equipped with communication capability.

33. (Currently Amended) A mobile communication device comprising:

a transmitter configured to transmit a ~~radio frequency~~voice call signal in a first operational state and a RFID signal in a second operational state;

a storage medium to store a first data and instructions to ~~operate~~ switch the transmitter between the first and second operational states to selectively (a) monitor for proximal presence of a radio frequency identifier (RFID) reader, and on detection of a RFID reader, output a data ~~in the form of a radio frequency~~as a RFID signal~~, said output emulating output of the data by a RFID transponder of a passive type~~ in a format employed by the RFID reader, and (b) ~~facilitate a user to communicate with~~transmit a voice call signal to another user of another communication device~~, with the communication being a voice call facilitated~~ at least in part over a wireless network; and

a processor coupled to the transmitter and the storage to execute the instructions.

34. (Original) The device of claim 33, wherein said instructions are further designed to sense for a probing radio frequency signal of the RFID reader.

35. (Original) The device of claim 33, wherein said data comprises a security key.

36. (Original) The device of claim 35, wherein said security key comprises a door key.

37. (Original) The device of claim 36, wherein said door key comprises a selected one of a garage door key, an exterior door key, an interior door key, and a motor vehicle door key.

38. (Original) The device of claim 33, wherein the instructions are further designed to facilitate provision of the data to the mobile communication device.

39. (Original) The device of claim 38, wherein the instructions are further designed to include with said facilitating, provisioning of at least a signaling attribute associated with the outputting of the data in the form of a radio frequency signal.

40. (Original) The device of claim 33, wherein the mobile communication device is a selected of a wireless mobile phone and a personal digital assistant equipped with communication capability.

41.-60. (Cancelled)

REMARKS/ARGUMENTS

Claims 1-40 were rejected and remain pending in the instant application. Claims 1-3, 5, 8-9, 13, 21, 29, and 33 are amended herein. Claims 41-60 were previously cancelled. The amendments are fully supported by the original disclosure, and no new matter is added.

Reconsideration of the claims in view of the amendment and the following remarks is respectfully requested.

Claim Rejections Under 35 USC § 103

Claims 1-40 are rejected under 35 USC 103(a) as allegedly being unpatentable over *Zalewski et al.* (US 6,771,981) in view of *Altwasser* (US 6,164,551).

Applicants respectfully traverse the rejections on the grounds that the cited combination fails to clearly teach or suggest the claimed subject matter. Nonetheless, Applicants have amended the independent claims without prejudice in order to advance prosecution.

As amended, claim 1 recites a method for providing a radio frequency identification (RFID) comprising:

receiving, by a mobile communications device, an instruction to transmit a first data to a RFID reader;

switching a transceiver of the mobile communications device from a first state to a second state, the transceiver configured to output voice call signals in the first state and to output RFID signals in the second state; and

outputting the first data by the transceiver in the second state, the transceiver outputting the first data as a radio frequency signal in a format employed by the RFID reader.

These amendments are supported at least in Figures 1-4 and 7, and in paragraphs [0025], [0030], [0039], [0044], [0059]-[0065], and [0080].

Zalewski and Altwasser do not teach these features.

Zalewski was cited on page 2 of the OA for teaching "a mobile station 4 having a radio frequency component 18 ***that is a known component*** of mobile phones, which is used to transmit and receive calls and messages using radio frequencies ***in a radio communication network, such as a GSM network***" (emphasis ours). Zalewski was also cited on pages 2-3 of the FOA for teaching that "a cover 100 is coupled to the mobile station." In the context of these passages, Zalewski discloses that a RFID transponder 110 may be included in cover 100 (col. 8, lines 1-3). Covers 100 "are changeable and thus allow the device on which the cover is attached to become an electronic key . . . ." (col. 8, lines 36-39). In other words, the device of Zalewski has a traditional radio frequency component for transmitting and receiving voice calls and messages over a radio frequency network, ***and requires a separate transmission/reception component (a transponder) for providing data transfer over short distances***.

Zalewski **teaches away** from the recitations of amended claim 1. In particular, Zalewski teaches away from "switching a transceiver of the mobile communications device from a first state to a second state, the transceiver configured to output voice call signals in the first state and to output RFID signals in the second state" because Zalewski explicitly requires radio frequency component 19 for voice calls/messages and a separate transmitter/receiver or transponder (22, 110) for data transfer. For at least the same reasons, Zalewski also **teaches away** from "outputting the first data by the transceiver in the second state, the transceiver outputting the first data as a radio frequency signal in a format employed by the RFID reader" for the same reasons. Therefore, Zalewski neither teaches nor suggests the recitations of amended claim 1.

Further, Applicants respectfully note that the omission of an element and <u>retention</u> of its function is an indicia of unobviousness. MPEP 2144.04, citing *In re Edge*, 359 F.2d 896, 149 USPQ 556 (CCPA 1966). Amended claim 1 recites a method for providing a RFID identification using a transceiver that is configured to output both voice call signals and RFID signals, eliminating an element taught by Zalewski while retaining the function of that element. This weighs against a finding of obviousness based in part on the disclosure of Zalewski.

Altwasser cannot cure the deficiencies of Zalewski. Altwasser merely discloses an economical RFID transponder for use as an identification element. Even if Altwasser and Zalewski were combined as suggested on page 4 of the OA, the combination would not teach or suggest the recitations of the amended claims. At most, the combination would merely provide a more economical RFID transponder for the cover 100 disclosed by Zalewski. Alone or in combination, the references fail to teach or suggest the "switching" or "outputting the first data by the transceiver in the second state" recitations of claim 1.

For at least the above reasons, claim 1 is allowable over the cited combination.

Independent claims 13, 21, and 33 have been amended to recite features substantially similar to those of claim 1, and are therefore also allowable over the cited combination for at least the same reasons.

Claims 2-12, 14-20, 22-32, and 34-39 depend from claims 1, 13, 21, or 33, incorporating the recitations of their base claim, and are thus allowable over the cited references for at least the same reason. In addition, the dependent claims are further allowable over the cited references by virtue of their additional recitations which are not taught or suggested by the references, such as:

- Claim 2: wherein said transceiver comprises a first signal processing unit configured to process voice call signals and a second signal processing unit configured to process RFID signals, said switching comprising coupling the second signal processing unit to a transmission path of the transceiver.

- Claims 3, 22: wherein said first data comprises a selected one of a security key and an identifier.

- Claims 4, 17, 24: wherein said security key comprises a selected one of a garage door key, an exterior door key, an interior door key, and a motor vehicle door key.

- Claims 5, 25: wherein said first data comprises an identifier, and said identifier comprises a selected one of a social security number, a driver's

license number, an affinity program account number, and a credit card number.

- Claim 6: wherein the method further comprises facilitating the user in selecting the first data from a plurality of data using the mobile communication device.

- Claims 7, 18: wherein the method further comprises facilitating provision of the first data to the mobile communication device.

- Claims 8, 19: wherein said facilitating of the provisioning of the data to the mobile communication device includes facilitating provision of at least a signaling attribute associated with the outputting of the data in the format employed by the RFID reader.

- Claim 9: wherein the method further comprises: monitoring for proximal presence of the RFID reader by the mobile communication device; and on detection of the RFID reader by the mobile communication device, outputting by the transceiver a second data as a second radio frequency signal, the outputting emulating output of the second data by a RFID transponder of a passive type.

- Claim 10: wherein said monitoring comprises sensing for a probing radio frequency signal of the RFID reader by the mobile communication device.

- Claims 11, 31: wherein said first and second data are the same data.

- Claims 12, 20, 32, 40: wherein the mobile communication device is a selected one of a wireless mobile phone and a personal digital assistant equipped with communication capability.

- Claim 14: wherein said monitoring comprises sensing for a probing radio frequency signal of the RFID reader by the mobile communication device.

- Claims 15, 35: wherein said data comprises a security key.

- Claims 16, 36: wherein said security key comprises a door key.
- Claim 23: wherein said first data comprises a security key, and said security key comprises a door key.
- Claims 26, 34: wherein the instructions are further designed to facilitate the user in selecting the first data from a plurality of data, and instructing said output.
- Claims 27, 38: wherein the instructions are further designed to facilitate provision of the first data to the mobile communication device.
- Claims 28, 39: wherein the instructions are further designed to include with said facilitating, provisioning of at least a signaling attribute associated with the outputting of the first data in the form of a radio frequency signal.
- Claim 29: wherein the instructions are further designed to monitor for proximal presence of the RFID reader; and on detection of the RFID reader, operate the transceiver to output a second data as a second RFID signal.
- Claim 30: wherein the instructions are further designed to sense for a probing radio frequency signal of the RFID reader.
- Claim 37: wherein said door key comprises a selected one of a garage door key, an exterior door key, an interior door key, and a motor vehicle door key.

For at least the above reasons, Applicants submit that all pending claims are patentable over the cited combination of Zalewski and Altwasser. Notice of allowance is respectfully requested.

CONCLUSION

In view of the foregoing amendments and remarks, Applicants believe the applicable rejections have been overcome and all claims remaining in the application are presently in condition for allowance. Accordingly, favorable consideration and a Notice of Allowance are earnestly solicited. The Examiner is invited to telephone the undersigned representative at (206) 622-1711 if the Examiner believes that an interview might be useful for any reason.

It is not believed that extensions of time are required beyond those that may otherwise be provided for in documents accompanying this paper. However, if additional extensions of time are necessary to prevent abandonment of this application, then such extensions of time are hereby petitioned under 37 C.F.R. § 1.136(a).

If the Examiner has any questions concerning the present paper, the Examiner is kindly requested to contact the undersigned at (206) 407-1542. If any fees are due in connection with filing this paper, the Commissioner is authorized to charge the Deposit Account of Schwabe, Williamson and Wyatt, P.C., No. 50-0393.

Respectfully submitted,
SCHWABE, WILLIAMSON & WYATT, P.C.

Date: March 24, 2010

By: /Jo Ann Schmidt/
Jo Ann Schmidt
Reg. No.: 62,255

Schwabe, Williamson & Wyatt, P.C.
U.S. Bank Centre
1420 5th Ave. Suite 3010
Seattle, WA 98101

Electronic Acknowledgement Receipt

EFS ID:	7277931
Application Number:	10560262
International Application Number:	
Confirmation Number:	3358
Title of Invention:	Emulated radio frequency identification
First Named Inventor/Applicant Name:	Peter Zatloukal
Customer Number:	60172
Filer:	Jo Ann Schmidt/Allyson Dahmen
Filer Authorized By:	Jo Ann Schmidt
Attorney Docket Number:	120083-146181
Receipt Date:	24-MAR-2010
Filing Date:	09-DEC-2005
Time Stamp:	18:28:10
Application Type:	U.S. National Stage under 35 USC 371

Payment information:

Submitted with Payment	no

File Listing:

Document Number	Document Description	File Name	File Size(Bytes)/ Message Digest	Multi Part /.zip	Pages (if appl.)
1		Varia_P064_Amendment.pdf	629667 5dfe0220c14b646a8c38ee6b115208a5a347ace3	yes	15

	Multipart Description/PDF files in .zip description		
	Document Description	**Start**	**End**
	Amendment/Req. Reconsideration-After Non-Final Reject	1	1
	Claims	2	9
	Applicant Arguments/Remarks Made in an Amendment	10	15
Warnings:			
Information:			
	Total Files Size (in bytes):	629667	

This Acknowledgement Receipt evidences receipt on the noted date by the USPTO of the indicated documents, characterized by the applicant, and including page counts, where applicable. It serves as evidence of receipt similar to a Post Card, as described in MPEP 503.

<u>New Applications Under 35 U.S.C. 111</u>
If a new application is being filed and the application includes the necessary components for a filing date (see 37 CFR 1.53(b)-(d) and MPEP 506), a Filing Receipt (37 CFR 1.54) will be issued in due course and the date shown on this Acknowledgement Receipt will establish the filing date of the application.

<u>National Stage of an International Application under 35 U.S.C. 371</u>
If a timely submission to enter the national stage of an international application is compliant with the conditions of 35 U.S.C. 371 and other applicable requirements a Form PCT/DO/EO/903 indicating acceptance of the application as a national stage submission under 35 U.S.C. 371 will be issued in addition to the Filing Receipt, in due course.

<u>New International Application Filed with the USPTO as a Receiving Office</u>
If a new international application is being filed and the international application includes the necessary components for an international filing date (see PCT Article 11 and MPEP 1810), a Notification of the International Application Number and of the International Filing Date (Form PCT/RO/105) will be issued in due course, subject to prescriptions concerning national security, and the date shown on this Acknowledgement Receipt will establish the international filing date of the application.

PTO/SB/06 (07-06)
Approved for use through 1/31/2007. OMB 0651-0032
U.S. Patent and Trademark Office; U.S. DEPARTMENT OF COMMERCE
Under the Paperwork Reduction Act of 1995, no persons are required to respond to a collection of information unless it displays a valid OMB control number.

PATENT APPLICATION FEE DETERMINATION RECORD

Substitute for Form PTO-875

Application or Docket Number	Filing Date	
10/560,262	12/09/2005	☐ To be Mailed

APPLICATION AS FILED – PART I

FOR	(Column 1) NUMBER FILED	(Column 2) NUMBER EXTRA	SMALL ENTITY ☐ RATE ($)	SMALL ENTITY FEE ($)	OR	OTHER THAN SMALL ENTITY RATE ($)	OTHER THAN SMALL ENTITY FEE ($)
☐ BASIC FEE (37 CFR 1.16(a), (b), or (c))	N/A	N/A	N/A			N/A	
☐ SEARCH FEE (37 CFR 1.16(k), (i), or (m))	N/A	N/A	N/A			N/A	
☐ EXAMINATION FEE (37 CFR 1.16(o), (p), or (q))	N/A	N/A	N/A			N/A	
TOTAL CLAIMS (37 CFR 1.16(i))	minus 20 =	*	X $ =		OR	X $ =	
INDEPENDENT CLAIMS (37 CFR 1.16(h))	minus 3 =	*	X $ =			X $ =	
☐ APPLICATION SIZE FEE (37 CFR 1.16(s))	If the specification and drawings exceed 100 sheets of paper, the application size fee due is $250 ($125 for small entity) for each additional 50 sheets or fraction thereof. See 35 U.S.C. 41(a)(1)(G) and 37 CFR 1.16(s).						
☐ MULTIPLE DEPENDENT CLAIM PRESENT (37 CFR 1.16(j))							
* If the difference in column 1 is less than zero, enter "0" in column 2.			TOTAL			TOTAL	

APPLICATION AS AMENDED – PART II

AMENDMENT 03/24/2010

	(Column 1) CLAIMS REMAINING AFTER AMENDMENT		(Column 2) HIGHEST NUMBER PREVIOUSLY PAID FOR	(Column 3) PRESENT EXTRA	SMALL ENTITY RATE ($)	SMALL ENTITY ADDITIONAL FEE ($)	OR	OTHER THAN SMALL ENTITY RATE ($)	OTHER THAN SMALL ENTITY ADDITIONAL FEE ($)
Total (37 CFR 1.16(i))	* 40	Minus	** 40	= 0	X $ =		OR	X $52=	0
Independent (37 CFR 1.16(h))	* 4	Minus	***4	= 0	X $ =		OR	X $220=	0
☐ Application Size Fee (37 CFR 1.16(s))									
☐ FIRST PRESENTATION OF MULTIPLE DEPENDENT CLAIM (37 CFR 1.16(j))							OR		
					TOTAL ADD'L FEE		OR	TOTAL ADD'L FEE	0

AMENDMENT

	(Column 1) CLAIMS REMAINING AFTER AMENDMENT		(Column 2) HIGHEST NUMBER PREVIOUSLY PAID FOR	(Column 3) PRESENT EXTRA	RATE ($)	ADDITIONAL FEE ($)		RATE ($)	ADDITIONAL FEE ($)
Total (37 CFR 1.16(i))	*	Minus	**	=	X $ =		OR	X $ =	
Independent (37 CFR 1.16(h))	*	Minus	***	=	X $ =		OR	X $ =	
☐ Application Size Fee (37 CFR 1.16(s))									
☐ FIRST PRESENTATION OF MULTIPLE DEPENDENT CLAIM (37 CFR 1.16(j))							OR		
					TOTAL ADD'L FEE		OR	TOTAL ADD'L FEE	

* If the entry in column 1 is less than the entry in column 2, write "0" in column 3.
** If the "Highest Number Previously Paid For" IN THIS SPACE is less than 20, enter "20".
*** If the "Highest Number Previously Paid For" IN THIS SPACE is less than 3, enter "3".
The "Highest Number Previously Paid For" (Total or Independent) is the highest number found in the appropriate box in column 1.

Legal Instrument Examiner:
/STELLA LITTLE/

This collection of information is required by 37 CFR 1.16. The information is required to obtain or retain a benefit by the public which is to file (and by the USPTO to process) an application. Confidentiality is governed by 35 U.S.C. 122 and 37 CFR 1.14. This collection is estimated to take 12 minutes to complete, including gathering, preparing, and submitting the completed application form to the USPTO. Time will vary depending upon the individual case. Any comments on the amount of time you require to complete this form and/or suggestions for reducing this burden, should be sent to the Chief Information Officer, U.S. Patent and Trademark Office, U.S. Department of Commerce, P.O. Box 1450, Alexandria, VA 22313-1450. DO NOT SEND FEES OR COMPLETED FORMS TO THIS ADDRESS. **SEND TO: Commissioner for Patents, P.O. Box 1450, Alexandria, VA 22313-1450.**
If you need assistance in completing the form, call 1-800-PTO-9199 and select option 2.

PTO/SB/06 (07-06)
Approved for use through 1/31/2007. OMB 0651-0032
U.S. Patent and Trademark Office; U.S. DEPARTMENT OF COMMERCE
Under the Paperwork Reduction Act of 1995, no persons are required to respond to a collection of information unless it displays a valid OMB control number.

PATENT APPLICATION FEE DETERMINATION RECORD

Substitute for Form PTO-875

Application or Docket Number	Filing Date	
10/560,262	12/09/2005	☐ To be Mailed

APPLICATION AS FILED – PART I

FOR	(Column 1) NUMBER FILED	(Column 2) NUMBER EXTRA	SMALL ENTITY ☐ RATE ($)	SMALL ENTITY FEE ($)	OR	OTHER THAN SMALL ENTITY RATE ($)	OTHER THAN SMALL ENTITY FEE ($)
☐ BASIC FEE (37 CFR 1.16(a), (b), or (c))	N/A	N/A	N/A			N/A	
☐ SEARCH FEE (37 CFR 1.16(k), (i), or (m))	N/A	N/A	N/A			N/A	
☐ EXAMINATION FEE (37 CFR 1.16(o), (p), or (q))	N/A	N/A	N/A			N/A	
TOTAL CLAIMS (37 CFR 1.16(i))	minus 20 =	*	X $ =		OR	X $ =	
INDEPENDENT CLAIMS (37 CFR 1.16(h))	minus 3 =	*	X $ =			X $ =	
☐ APPLICATION SIZE FEE (37 CFR 1.16(s))	If the specification and drawings exceed 100 sheets of paper, the application size fee due is $250 ($125 for small entity) for each additional 50 sheets or fraction thereof. See 35 U.S.C. 41(a)(1)(G) and 37 CFR 1.16(s).						
☐ MULTIPLE DEPENDENT CLAIM PRESENT (37 CFR 1.16(j))							
* If the difference in column 1 is less than zero, enter "0" in column 2.			TOTAL			TOTAL	

APPLICATION AS AMENDED – PART II

AMENDMENT 03/24/2010

	(Column 1) CLAIMS REMAINING AFTER AMENDMENT		(Column 2) HIGHEST NUMBER PREVIOUSLY PAID FOR	(Column 3) PRESENT EXTRA	SMALL ENTITY RATE ($)	SMALL ENTITY ADDITIONAL FEE ($)	OR	OTHER THAN SMALL ENTITY RATE ($)	OTHER THAN SMALL ENTITY ADDITIONAL FEE ($)
Total (37 CFR 1.16(i))	* 40	Minus	** 40	= 0	X $ =		OR	X $52=	0
Independent (37 CFR 1.16(h))	* 4	Minus	***4	= 0	X $ =		OR	X $220=	0
☐ Application Size Fee (37 CFR 1.16(s))									
☐ FIRST PRESENTATION OF MULTIPLE DEPENDENT CLAIM (37 CFR 1.16(j))							OR		
					TOTAL ADD'L FEE		OR	TOTAL ADD'L FEE	0

AMENDMENT

	(Column 1) CLAIMS REMAINING AFTER AMENDMENT		(Column 2) HIGHEST NUMBER PREVIOUSLY PAID FOR	(Column 3) PRESENT EXTRA	RATE ($)	ADDITIONAL FEE ($)		RATE ($)	ADDITIONAL FEE ($)
Total (37 CFR 1.16(i))	*	Minus	**	=	X $ =		OR	X $ =	
Independent (37 CFR 1.16(h))	*	Minus	***	=	X $ =		OR	X $ =	
☐ Application Size Fee (37 CFR 1.16(s))									
☐ FIRST PRESENTATION OF MULTIPLE DEPENDENT CLAIM (37 CFR 1.16(j))							OR		
					TOTAL ADD'L FEE		OR	TOTAL ADD'L FEE	

* If the entry in column 1 is less than the entry in column 2, write "0" in column 3.
** If the "Highest Number Previously Paid For" IN THIS SPACE is less than 20, enter "20".
*** If the "Highest Number Previously Paid For" IN THIS SPACE is less than 3, enter "3".
The "Highest Number Previously Paid For" (Total or Independent) is the highest number found in the appropriate box in column 1.

Legal Instrument Examiner:
/STELLA LITTLE/

This collection of information is required by 37 CFR 1.16. The information is required to obtain or retain a benefit by the public which is to file (and by the USPTO to process) an application. Confidentiality is governed by 35 U.S.C. 122 and 37 CFR 1.14. This collection is estimated to take 12 minutes to complete, including gathering, preparing, and submitting the completed application form to the USPTO. Time will vary depending upon the individual case. Any comments on the amount of time you require to complete this form and/or suggestions for reducing this burden, should be sent to the Chief Information Officer, U.S. Patent and Trademark Office, U.S. Department of Commerce, P.O. Box 1450, Alexandria, VA 22313-1450. DO NOT SEND FEES OR COMPLETED FORMS TO THIS ADDRESS. **SEND TO: Commissioner for Patents, P.O. Box 1450, Alexandria, VA 22313-1450.**
If you need assistance in completing the form, call 1-800-PTO-9199 and select option 2.

UNITED STATES PATENT AND TRADEMARK OFFICE

UNITED STATES DEPARTMENT OF COMMERCE
United States Patent and Trademark Office
Address: COMMISSIONER FOR PATENTS
P.O. Box 1450
Alexandria, Virginia 22313-1450
www.uspto.gov

APPLICATION NO.	FILING DATE	FIRST NAMED INVENTOR	ATTORNEY DOCKET NO.	CONFIRMATION NO.
10/560,262	12/09/2005	Peter Zatloukal	120083-146181	3358

60172 7590 12/24/2009
SCHWABE, WILLIAMSON & WYATT, P.C.
1420 FIFTH, SUITE 3010
SEATTLE, WA 98101

EXAMINER
KOYAMA, KUMIKO C

ART UNIT	PAPER NUMBER
2887	

MAIL DATE	DELIVERY MODE
12/24/2009	PAPER

Please find below and/or attached an Office communication concerning this application or proceeding.

The time period for reply, if any, is set in the attached communication.

PTOL-90A (Rev. 04/07)

Office Action Summary	Application No.	Applicant(s)	
	10/560,262	ZATLOUKAL ET AL.	
	Examiner	Art Unit	
	KUMIKO C. KOYAMA	2887	

-- The MAILING DATE of this communication appears on the cover sheet with the correspondence address --

Period for Reply

A SHORTENED STATUTORY PERIOD FOR REPLY IS SET TO EXPIRE 3 MONTH(S) OR THIRTY (30) DAYS, WHICHEVER IS LONGER, FROM THE MAILING DATE OF THIS COMMUNICATION.

- Extensions of time may be available under the provisions of 37 CFR 1.136(a). In no event, however, may a reply be timely filed after SIX (6) MONTHS from the mailing date of this communication.
- If NO period for reply is specified above, the maximum statutory period will apply and will expire SIX (6) MONTHS from the mailing date of this communication.
- Failure to reply within the set or extended period for reply will, by statute, cause the application to become ABANDONED (35 U.S.C. § 133). Any reply received by the Office later than three months after the mailing date of this communication, even if timely filed, may reduce any earned patent term adjustment. See 37 CFR 1.704(b).

Status

1)☒ Responsive to communication(s) filed on 10 December 2009.

2a)☐ This action is **FINAL**. 2b)☒ This action is non-final.

3)☐ Since this application is in condition for allowance except for formal matters, prosecution as to the merits is closed in accordance with the practice under *Ex parte Quayle*, 1935 C.D. 11, 453 O.G. 213.

Disposition of Claims

4)☒ Claim(s) 1-40 is/are pending in the application.

4a) Of the above claim(s) _____ is/are withdrawn from consideration.

5)☐ Claim(s) _____ is/are allowed.

6)☒ Claim(s) 1-40 is/are rejected.

7)☐ Claim(s) _____ is/are objected to.

8)☐ Claim(s) _____ are subject to restriction and/or election requirement.

Application Papers

9)☐ The specification is objected to by the Examiner.

10)☒ The drawing(s) filed on 09 December 2005 is/are: a)☒ accepted or b)☐ objected to by the Examiner.

Applicant may not request that any objection to the drawing(s) be held in abeyance. See 37 CFR 1.85(a).

Replacement drawing sheet(s) including the correction is required if the drawing(s) is objected to. See 37 CFR 1.121(d).

11)☐ The oath or declaration is objected to by the Examiner. Note the attached Office Action or form PTO-152.

Priority under 35 U.S.C. § 119

12)☐ Acknowledgment is made of a claim for foreign priority under 35 U.S.C. § 119(a)-(d) or (f).

a)☐ All b)☐ Some * c)☐ None of:

1.☐ Certified copies of the priority documents have been received.

2.☐ Certified copies of the priority documents have been received in Application No. _____.

3.☐ Copies of the certified copies of the priority documents have been received in this National Stage application from the International Bureau (PCT Rule 17.2(a)).

* See the attached detailed Office action for a list of the certified copies not received.

Attachment(s)

1) ☒ Notice of References Cited (PTO-892)
2) ☐ Notice of Draftsperson's Patent Drawing Review (PTO-948)
3) ☐ Information Disclosure Statement(s) (PTO/SB/08) Paper No(s)/Mail Date _____.
4) ☐ Interview Summary (PTO-413) Paper No(s)/Mail Date. _____ .
5) ☐ Notice of Informal Patent Application
6) ☐ Other: _____.

DETAILED ACTION

Amendment received on December 10, 2009 has been acknowledged.

Continued Examination Under 37 CFR 1.114

1. A request for continued examination under 37 CFR 1.114, including the fee set forth in 37 CFR 1.17(e), was filed in this application after final rejection. Since this application is eligible for continued examination under 37 CFR 1.114, and the fee set forth in 37 CFR 1.17(e) has been timely paid, the finality of the previous Office action has been withdrawn pursuant to 37 CFR 1.114. Applicant's submission filed on December 10, 2009 has been entered.

Claim Rejections - 35 USC § 103

2. The following is a quotation of 35 U.S.C. 103(a) which forms the basis for all obviousness rejections set forth in this Office action:

> (a) A patent may not be obtained though the invention is not identically disclosed or described as set forth in section 102 of this title, if the differences between the subject matter sought to be patented and the prior art are such that the subject matter as a whole would have been obvious at the time the invention was made to a person having ordinary skill in the art to which said subject matter pertains. Patentability shall not be negatived by the manner in which the invention was made.

3. Claims 1-40 are rejected under 35 U.S.C. 103(a) as being unpatentable over by Zalewski et al (US 6,771,981) in view of Altwasser (US 6,164,551).

Re Claims 1, 2, 6-11, 13, 14, 18, 19, 21, 26-31, 33, 34, 38 and 39: Zalewski discloses a mobile station 4 having a radio frequency component 18 that is a known component of mobile phones, which is used to transmit and receive calls and messages using radio frequencies in a radio communication network, such a GSM network (col 6, lines 65-col 7, line3). A cover 100 is

coupled to the mobile staion 4 (col 7,m lines 58-62). Such disclosure of a radio frequency component 18 teaches a component of a mobile communication device to output a first data, and the component being also equipped to facilitate a user in communicating with a user of another communication device, with the communication being facilitated at least in part over a wireless network. Zalewski discloses that a user may use mobile station 104 to send request for room SMS or the like to a central reservation site to reserve a hotel room. Central reservation site may send return SMS or the like comprising with room number, ID code, directions and other information (col 16, lines 35-42). Such disclosure teaches facilitating a user in providing an instruction to a component of a mobile communication device to output a first data. User may then proceed directly to room bypassing desk clerk. User then may place mobile station close to door lock which comprises an interrogator. Lock interrogates cover 100 and the cover responds with code received from central reservation site. Thus door is unlocked (col 16, lines 42-47). Such disclosure teaches the output emulating an output of the first data by an active RFID transponder, and in response to the providing an instruction, outputting the first data in the form of a radio frequency signal, the outputting emulating output of the first data by an active transponder. Since the cover 100 responds to the interrogation of the door lock, the cover 100 is monitoring for proximal presence of the RFID reader.

Zalewski fails to teach an active type and a passive type RFID tranponder.

Altwasser discloses that RFID transponders are constructed as either passive or active elements. If the RFID transponder is used as an active element, the housing enclosing the integrated circuit contains an additional energy source usually in the form of a battery (col 1, lines 20-25).

Therefore, it would have been obvious to an artisan of ordinary skill in the art at the time the invention was made to integrate the teachings of Altwasser to the teachings of Zalewski such that the RFID transponder receives its energy either from an inside or outside source, so that the RFID transponder can operate in an appropriate manner.

Re claims 3, 4, 15-17, 22-24 and 35-37: Zalewski discloses a hotel door key.

Re claims 5 and 25: Zalewski further discloses that by means of a mobile station equipped with a suitable application module the user can make payments in a shop using hi/her credit account (col 5, lines 35-40).

Re claims 12, 20, 32 and 40: Zalewski shows in Fig. 6 a wireless mobile phone 104.

Response to Arguments

4. Applicant's arguments with respect to claims 1-40 have been considered but are moot in view of the new ground(s) of rejection.

Applicant amended the claims with “an active type” and “a passive type.” Such new limitation necessitated new search and consideration.

Conclusion

Any inquiry concerning this communication or earlier communications from the examiner should be directed to KUMIKO C. KOYAMA whose telephone number is (571)272-2394. The examiner can normally be reached on Monday-Friday 8am-4:30pm.

If attempts to reach the examiner by telephone are unsuccessful, the examiner's supervisor, Steve Paik can be reached on 571-272-2404. The fax phone number for the organization where this application or proceeding is assigned is 571-273-8300.

Information regarding the status of an application may be obtained from the Patent Application Information Retrieval (PAIR) system. Status information for published applications may be obtained from either Private PAIR or Public PAIR. Status information for unpublished applications is available through Private PAIR only. For more information about the PAIR system, see http://pair-direct.uspto.gov. Should you have questions on access to the Private PAIR system, contact the Electronic Business Center (EBC) at 866-217-9197 (toll-free). If you would like assistance from a USPTO Customer Service Representative or access to the automated information system, call 800-786-9199 (IN USA OR CANADA) or 571-272-1000.

/Kumiko C. Koyama/
Primary Examiner, Art Unit 2887
December 20, 2009

Notice of References Cited	Application/Control No. 10/560,262	Applicant(s)/Patent Under Reexamination ZATLOUKAL ET AL.	
	Examiner KUMIKO C. KOYAMA	Art Unit 2887	Page 1 of 1

U.S. PATENT DOCUMENTS

*		Document Number Country Code-Number-Kind Code	Date MM-YYYY	Name	Classification
*	A	US-6,164,551	12-2000	Altwasser, Richard	235/492
	B	US-			
	C	US-			
	D	US-			
	E	US-			
	F	US-			
	G	US-			
	H	US-			
	I	US-			
	J	US-			
	K	US-			
	L	US-			
	M	US-			

FOREIGN PATENT DOCUMENTS

*		Document Number Country Code-Number-Kind Code	Date MM-YYYY	Country	Name	Classification
	N					
	O					
	P					
	Q					
	R					
	S					
	T					

NON-PATENT DOCUMENTS

*		Include as applicable: Author, Title Date, Publisher, Edition or Volume, Pertinent Pages)
	U	
	V	
	W	
	X	

*A copy of this reference is not being furnished with this Office action. (See MPEP § 707.05(a).)
Dates in MM-YYYY format are publication dates. Classifications may be US or foreign.

Index of Claims	Application/Control No.	Applicant(s)/Patent Under Reexamination
	10560262	ZATLOUKAL ET AL.
	Examiner	**Art Unit**
	KUMIKO C KOYAMA	2887

✓	Rejected	-	Cancelled	N	Non-Elected	A	Appeal
=	Allowed	÷	Restricted	I	Interference	O	Objected

☐ Claims renumbered in the same order as presented by applicant ☐ CPA ☐ T.D. ☐ R.1.47

CLAIM		DATE								
Final	Original	02/28/2009	08/15/2009	12/20/2009						
	1	✓	✓	✓						
	2	✓	✓	✓						
	3	✓	✓	✓						
	4	✓	✓	✓						
	5	✓	✓	✓						
	6	✓	✓	✓						
	7	✓	✓	✓						
	8	✓	✓	✓						
	9	✓	✓	✓						
	10	✓	✓	✓						
	11	✓	✓	✓						
	12	✓	✓	✓						
	13	✓	✓	✓						
	14	✓	✓	✓						
	15	✓	✓	✓						
	16	✓	✓	✓						
	17	✓	✓	✓						
	18	✓	✓	✓						
	19	✓	✓	✓						
	20	✓	✓	✓						
	21	✓	✓	✓						
	22	✓	✓	✓						
	23	✓	✓	✓						
	24	✓	✓	✓						
	25	✓	✓	✓						
	26	✓	✓	✓						
	27	✓	✓	✓						
	28	✓	✓	✓						
	29	✓	✓	✓						
	30	✓	✓	✓						
	31	✓	✓	✓						
	32	✓	✓	✓						
	33	✓	✓	✓						
	34	✓	✓	✓						
	35	✓	✓	✓						
	36	✓	✓	✓						

Index of Claims	Application/Control No.	Applicant(s)/Patent Under Reexamination
	10560262	ZATLOUKAL ET AL.
	Examiner	**Art Unit**
	KUMIKO C KOYAMA	2887

✓	Rejected	-	Cancelled	N	Non-Elected	A	Appeal
=	Allowed	÷	Restricted	I	Interference	O	Objected

☐ Claims renumbered in the same order as presented by applicant ☐ CPA ☐ T.D. ☐ R.1.47

CLAIM		DATE								
Final	Original	02/28/2009	08/15/2009	12/20/2009						
	37	✓	✓	✓						
	38	✓	✓	✓						
	39	✓	✓	✓						
	40	✓	✓	✓						
	41	-	-	-						
	42	-	-	-						
	43	-	-	-						
	44	-	-	-						
	45	-	-	-						
	46	-	-	-						
	47	-	-	-						
	48	-	-	-						
	49	-	-	-						
	50	-	-	-						
	51	-	-	-						
	52	-	-	-						
	53	-	-	-						
	54	-	-	-						
	55	-	-	-						
	56	-	-	-						
	57	-	-	-						
	58	-	-	-						
	59	-	-	-						
	60	-	-	-						

Search Notes	Application/Control No.	Applicant(s)/Patent Under Reexamination
	10560262	ZATLOUKAL ET AL.
	Examiner	**Art Unit**
	KUMIKO C KOYAMA	2887

SEARCHED

Class	Subclass	Date	Examiner
235	375, 380, 492	02/28/2009	KCK
455	557	02/28/2009	KCK
340	505, 539.1, 539.11	02/28/2009	KCK
Updated	Search	08/15/2009	KCK
Updated	Search	12/20/2009	KCK

SEARCH NOTES

Search Notes	Date	Examiner
East Search	02/28/2009	KCK
Updated Search	08/15/2009	KCK
Updated East Search	12/20/2009	KCK

INTERFERENCE SEARCH

Class	Subclass	Date	Examiner

EAST Search History

EAST Search History (Prior Art)

Ref #	Hits	Search Query	DBs	Default Operator	Plurals	Time Stamp
L1	700	"235"/$.ccls. and (rfid with passive with active)	US-PGPUB; USPAT; USOCR; EPO; JPO; DERWENT; IBM_TDB	OR	ON	2009/12/20 21:37
L2	121	"235"/492.ccls. and (rfid with passive with active)	US-PGPUB; USPAT; USOCR; EPO; JPO; DERWENT; IBM_TDB	OR	ON	2009/12/20 21:38

12/20/2009 9:50:15 PM
C:\Documents and Settings\kkoyama\My Documents\EAST\Workspaces\10560262amend.wsp

PTO/SB/30EFS (07-09)
Approved for use through 07/31/2012. OMB 0651-0031
U.S. Patent and Trademark Office; U.S. DEPARTMENT OF COMMERCE
Under the Paperwork Reduction Act of 1995, no persons are required to respond to a collection of information unless it contains a valid OMB control number.

REQUEST FOR CONTINUED EXAMINATION(RCE)TRANSMITTAL
(Submitted Only via EFS-Web)

Application Number	10560262	Filing Date	2005-12-09	Docket Number (if applicable)	120083-146181	Art Unit	2887
First Named Inventor	Peter Zatloukal			Examiner Name	Kumiko C. Koyama		

This is a Request for Continued Examination (RCE) under 37 CFR 1.114 of the above-identified application.
Request for Continued Examination (RCE) practice under 37 CFR 1.114 does not apply to any utility or plant application filed prior to June 8, 1995, or to any design application. The Instruction Sheet for this form is located at WWW.USPTO.GOV

SUBMISSION REQUIRED UNDER 37 CFR 1.114

Note: If the RCE is proper, any previously filed unentered amendments and amendments enclosed with the RCE will be entered in the order in which they were filed unless applicant instructs otherwise. If applicant does not wish to have any previously filed unentered amendment(s) entered, applicant must request non-entry of such amendment(s).

☐ Previously submitted. If a final Office action is outstanding, any amendments filed after the final Office action may be considered as a submission even if this box is not checked.

- ☐ Consider the arguments in the Appeal Brief or Reply Brief previously filed on _____
- ☐ Other _____

☒ Enclosed

- ☒ Amendment/Reply
- ☐ Information Disclosure Statement (IDS)
- ☐ Affidavit(s)/ Declaration(s)
- ☐ Other _____

MISCELLANEOUS

☐ Suspension of action on the above-identified application is requested under 37 CFR 1.103(c) for a period of months _____
(Period of suspension shall not exceed 3 months; Fee under 37 CFR 1.17(i) required)

☐ Other _____

FEES

☐ **The RCE fee under 37 CFR 1.17(e) is required by 37 CFR 1.114 when the RCE is filed.**
The Director is hereby authorized to charge any underpayment of fees, or credit any overpayments, to Deposit Account No _____

SIGNATURE OF APPLICANT, ATTORNEY, OR AGENT REQUIRED

☒ Patent Practitioner Signature

☐ Applicant Signature

PTO/SB/30EFS (07-09)
Approved for use through 07/31/2012. OMB 0651-0031
U.S. Patent and Trademark Office; U.S. DEPARTMENT OF COMMERCE
Under the Paperwork Reduction Act of 1995, no persons are required to respond to a collection of information unless it contains a valid OMB control number.

Signature of Registered U.S. Patent Practitioner			
Signature	/Jo Ann Schmidt/	Date (YYYY-MM-DD)	2009-12-10
Name	Jo Ann Schmidt	Registration Number	62255

This collection of information is required by 37 CFR 1.114. The information is required to obtain or retain a benefit by the public which is to file (and by the USPTO to process) an application. Confidentiality is governed by 35 U.S.C. 122 and 37 CFR 1.11 and 1.14. This collection is estimated to take 12 minutes to complete, including gathering, preparing, and submitting the completed application form to the USPTO. Time will vary depending upon the individual case. Any comments on the amount of time you require to complete this form and/or suggestions for reducing this burden, should be sent to the Chief Information Officer, U.S. Patent and Trademark Office, U.S. Department of Commerce, P.O. Box 1450, Alexandria, VA 22313-1450.

If you need assistance in completing the form, call 1-800-PTO-9199 and select option 2.

Privacy Act Statement

The Privacy Act of 1974 (P.L. 93-579) requires that you be given certain information in connection with your submission of the attached form related to a patent application or patent. Accordingly, pursuant to the requirements of the Act, please be advised that: (1) the general authority for the collection of this information is 35 U.S.C. 2(b)(2); (2) furnishing of the information solicited is voluntary; and (3) the principal purpose for which the information is used by the U.S. Patent and Trademark Office is to process and/or examine your submission related to a patent application or patent. If you do not furnish the requested information, the U.S. Patent and Trademark Office may not be able to process and/or examine your submission, which may result in termination of proceedings or abandonment of the application or expiration of the patent.

The information provided by you in this form will be subject to the following routine uses:

1. The information on this form will be treated confidentially to the extent allowed under the Freedom of Information Act (5 U.S.C. 552) and the Privacy Act (5 U.S.C. 552a). Records from this system of records may be disclosed to the Department of Justice to determine whether the Freedom of Information Act requires disclosure of these records.

2. A record from this system of records may be disclosed, as a routine use, in the course of presenting evidence to a court, magistrate, or administrative tribunal, including disclosures to opposing counsel in the course of settlement negotiations.

3. A record in this system of records may be disclosed, as a routine use, to a Member of Congress submitting a request involving an individual, to whom the record pertains, when the individual has requested assistance from the Member with respect to the subject matter of the record.

4. A record in this system of records may be disclosed, as a routine use, to a contractor of the Agency having need for the information in order to perform a contract. Recipients of information shall be required to comply with the requirements of the Privacy Act of 1974, as amended, pursuant to 5 U.S.C. 552a(m).

5. A record related to an International Application filed under the Patent Cooperation Treaty in this system of records may be disclosed, as a routine use, to the International Bureau of the World Intellectual Property Organization, pursuant to the Patent Cooperation Treaty.

6. A record in this system of records may be disclosed, as a routine use, to another federal agency for purposes of National Security review (35 U.S.C. 181) and for review pursuant to the Atomic Energy Act (42 U.S.C. 218(c)).

7. A record from this system of records may be disclosed, as a routine use, to the Administrator, General Services, or his/her designee, during an inspection of records conducted by GSA as part of that agency's responsibility to recommend improvements in records management practices and programs, under authority of 44 U.S.C. 2904 and 2906. Such disclosure shall be made in accordance with the GSA regulations governing inspection of records for this purpose, and any other relevant (i.e., GSA or Commerce) directive. Such disclosure shall not be used to make determinations about individuals.

8. A record from this system of records may be disclosed, as a routine use, to the public after either publication of the application pursuant to 35 U.S.C. 122(b) or issuance of a patent pursuant to 35 U.S.C. 151. Further, a record may be disclosed, subject to the limitations of 37 CFR 1.14, as a routine use, to the public if the record was filed in an application which became abandoned or in which the proceedings were terminated and which application is referenced by either a published application, an application open to public inspections or an issued patent.

9. A record from this system of records may be disclosed, as a routine use, to a Federal, State, or local law enforcement agency, if the USPTO becomes aware of a violation or potential violation of law or regulation.

PTO/SB/22 (07-09)
Approved for use through 07/31/2012. OMB 0651-0031
U.S. Patent and Trademark Office; U.S. DEPARMENT OF COMMERCE
Under the paperwork Reduction Act of 1995, no persons are required to respond to a collection of information unless it displays a valid OMB control number.

PETITION FOR EXTENSION OF TIME UNDER 37 CFR 1.136(a) **FY 2009** ***(Fees pursuant to the Consolidated Appropriations Act, 2005 (H.R. 4818).)***	Docket Number (Optional) 120083-146181
Application Number 10/560,262	Filed December 9, 2005
For EMULATED RADIO FREQUENCY IDENTIFICATION	
Art Unit 2887	Examiner Kumiko C. Koyama

This is a request under the provisions of 37 CFR 1.136(a) to extend the period for filing a reply in the above identified application.

The requested extension and fee are as follows (check time period desired and enter the appropriate fee below):

		Fee	Small Entity Fee	
☑	One month (37 CFR 1.17(a)(1))	$130	$65	$ 65
☐	Two months (37 CFR 1.17(a)(2))	$490	$245	$
☐	Three months (37 CFR 1.17(a)(3))	$1110	$555	$
☐	Four months (37 CFR 1.17(a)(4))	$1730	$865	$
☐	Five months (37 CFR 1.17(a)(5))	$2350	$1175	$

☐ Applicant claims small entity status. See 37 CFR 1.27.

☐ A check in the amount of the fee is enclosed.

☐ Payment by credit card. Form PTO-2038 is attached.

☐ The Director has already been authorized to charge fees in this application to a Deposit Account.

☑ The Director is hereby authorized to charge any fees which may be required, or credit any overpayment, to Deposit Account Number 500393.

WARNING: Information on this form may become public. Credit card information should not be included on this form. Provide credit card information and authorization on PTO-2038.

I am the

☐ applicant/inventor.

☐ assignee of record of the entire interest. See 37 CFR 3.71.
Statement under 37 CFR 3.73(b) is enclosed (Form PTO/SB/96).

☑ attorney or agent of record. Registration Number 62,255

☐ attorney or agent under 37 CFR 1.34.
Registration number if acting under 37 CFR 1.34 _____

/Jo Ann Schmidt/	December 10, 2009
Signature	Date
Jo Ann Schmidt	206-622-1711
Typed or printed name	Telephone Number

NOTE: Signatures of all the inventors or assignees of record of the entire interest or their representative(s) are required. Submit multiple forms if more than one signature is required, see below.

☑ Total of 1 forms are submitted.

This collection of information is required by 37 CFR 1.136(a). The information is required to obtain or retain a benefit by the public which is to file (and by the USPTO to process) an application. Confidentiality is governed by 35 U.S.C. 122 and 37 CFR 1.11 and 1.14. This collection is estimated to take 6 minutes to complete, including gathering, preparing, and submitting the completed application form to the USPTO. Time will vary depending upon the individual case. Any comments on the amount of time you require to complete this form and/or suggestions for reducing this burden, should be sent to the Chief Information Officer, U.S. Patent and Trademark Office, U.S. Department of Commerce, P.O. Box 1450, Alexandria, VA 22313-1450. DO NOT SEND FEES OR COMPLETED FORMS TO THIS ADDRESS. **SEND TO: Commissioner for Patents, P.O. Box 1450, Alexandria, VA 22313-1450.**

If you need assistance in completing the form, call 1-800-PTO-9199 and select option 2.

Privacy Act Statement

The Privacy Act of 1974 (P.L. 93-579) requires that you be given certain information in connection with your submission of the attached form related to a patent application or patent. Accordingly, pursuant to the requirements of the Act, please be advised that: (1) the general authority for the collection of this information is 35 U.S.C. 2(b)(2); (2) furnishing of the information solicited is voluntary; and (3) the principal purpose for which the information is used by the U.S. Patent and Trademark Office is to process and/or examine your submission related to a patent application or patent. If you do not furnish the requested information, the U.S. Patent and Trademark Office may not be able to process and/or examine your submission, which may result in termination of proceedings or abandonment of the application or expiration of the patent.

The information provided by you in this form will be subject to the following routine uses:

1. The information on this form will be treated confidentially to the extent allowed under the Freedom of Information Act (5 U.S.C. 552) and the Privacy Act (5 U.S.C 552a). Records from this system of records may be disclosed to the Department of Justice to determine whether disclosure of these records is required by the Freedom of Information Act.
2. A record from this system of records may be disclosed, as a routine use, in the course of presenting evidence to a court, magistrate, or administrative tribunal, including disclosures to opposing counsel in the course of settlement negotiations.
3. A record in this system of records may be disclosed, as a routine use, to a Member of Congress submitting a request involving an individual, to whom the record pertains, when the individual has requested assistance from the Member with respect to the subject matter of the record.
4. A record in this system of records may be disclosed, as a routine use, to a contractor of the Agency having need for the information in order to perform a contract. Recipients of information shall be required to comply with the requirements of the Privacy Act of 1974, as amended, pursuant to 5 U.S.C. 552a(m).
5. A record related to an International Application filed under the Patent Cooperation Treaty in this system of records may be disclosed, as a routine use, to the International Bureau of the World Intellectual Property Organization, pursuant to the Patent Cooperation Treaty.
6. A record in this system of records may be disclosed, as a routine use, to another federal agency for purposes of National Security review (35 U.S.C. 181) and for review pursuant to the Atomic Energy Act (42 U.S.C. 218(c)).
7. A record from this system of records may be disclosed, as a routine use, to the Administrator, General Services, or his/her designee, during an inspection of records conducted by GSA as part of that agency's responsibility to recommend improvements in records management practices and programs, under authority of 44 U.S.C. 2904 and 2906. Such disclosure shall be made in accordance with the GSA regulations governing inspection of records for this purpose, and any other relevant (i.e., GSA or Commerce) directive. Such disclosure shall not be used to make determinations about individuals.
8. A record from this system of records may be disclosed, as a routine use, to the public after either publication of the application pursuant to 35 U.S.C. 122(b) or issuance of a patent pursuant to 35 U.S.C. 151. Further, a record may be disclosed, subject to the limitations of 37 CFR 1.14, as a routine use, to the public if the record was filed in an application which became abandoned or in which the proceedings were terminated and which application is referenced by either a published application, an application open to public inspection or an issued patent.
9. A record from this system of records may be disclosed, as a routine use, to a Federal, State, or local law enforcement agency, if the USPTO becomes aware of a violation or potential violation of law or regulation.

Electronic Patent Application Fee Transmittal

Application Number:	10560262
Filing Date:	09-Dec-2005
Title of Invention:	Emulated radio frequency identification
First Named Inventor/Applicant Name:	Peter Zatloukal
Filer:	Jo Ann Schmidt/Allyson Dahmen
Attorney Docket Number:	120083-146181

Filed as Small Entity

U.S. National Stage under 35 USC 371 Filing Fees

Description	Fee Code	Quantity	Amount	Sub-Total in USD($)
Basic Filing:				
Pages:				
Claims:				
Miscellaneous-Filing:				
Petition:				
Patent-Appeals-and-Interference:				
Post-Allowance-and-Post-Issuance:				
Extension-of-Time:				
Extension - 1 month with $0 paid	2251	1	65	65

Description	Fee Code	Quantity	Amount	Sub-Total in USD($)
Miscellaneous:				
Request for continued examination	2801	1	405	405
		Total in USD ($)		**470**

Electronic Acknowledgement Receipt	
EFS ID:	6614447
Application Number:	10560262
International Application Number:	
Confirmation Number:	3358
Title of Invention:	Emulated radio frequency identification
First Named Inventor/Applicant Name:	Peter Zatloukal
Customer Number:	60172
Filer:	Jo Ann Schmidt/Allyson Dahmen
Filer Authorized By:	Jo Ann Schmidt
Attorney Docket Number:	120083-146181
Receipt Date:	10-DEC-2009
Filing Date:	09-DEC-2005
Time Stamp:	18:42:26
Application Type:	U.S. National Stage under 35 USC 371

Payment information:

Submitted with Payment	yes
Payment Type	Deposit Account
Payment was successfully received in RAM	$470
RAM confirmation Number	4838
Deposit Account	500393
Authorized User	
The Director of the USPTO is hereby authorized to charge indicated fees and credit any overpayment as follows: Charge any Additional Fees required under 37 C.F.R. Section 1.21 (Miscellaneous fees and charges)	

File Listing:

Document Number	Document Description	File Name	File Size(Bytes)/ Message Digest	Multi Part /.zip	Pages (if appl.)
1		Varia_P064_Amend.pdf	490994 071a5df95acdcfb8e5afa49150bbcff981d56364	yes	12
	Multipart Description/PDF files in .zip description				
	Document Description		**Start**	**End**	
	Amendment Submitted/Entered with Filing of CPA/RCE		1	1	
	Claims		2	7	
	Applicant Arguments/Remarks Made in an Amendment		8	12	
Warnings:					
Information:					
2	Request for Continued Examination (RCE)	Varia_P064_RCE.pdf	697422 db213c4329994ddd135038274c01b8907fe6f84c	no	3
Warnings:					
Information:					
3	Extension of Time	Varia_P064_EOT.pdf	312775 18c0de2e99f4abef9ec376bf3f1d77f61f146155	no	2
Warnings:					
Information:					
4	Fee Worksheet (PTO-875)	fee-info.pdf	31586 c796b8243e0d0fd7404accdb7cc452e672400eed	no	2
Warnings:					
Information:					
		Total Files Size (in bytes):	1532777		

This Acknowledgement Receipt evidences receipt on the noted date by the USPTO of the indicated documents, characterized by the applicant, and including page counts, where applicable. It serves as evidence of receipt similar to a Post Card, as described in MPEP 503.

New Applications Under 35 U.S.C. 111
If a new application is being filed and the application includes the necessary components for a filing date (see 37 CFR 1.53(b)-(d) and MPEP 506), a Filing Receipt (37 CFR 1.54) will be issued in due course and the date shown on this Acknowledgement Receipt will establish the filing date of the application.

National Stage of an International Application under 35 U.S.C. 371
If a timely submission to enter the national stage of an international application is compliant with the conditions of 35 U.S.C. 371 and other applicable requirements a Form PCT/DO/EO/903 indicating acceptance of the application as a national stage submission under 35 U.S.C. 371 will be issued in addition to the Filing Receipt, in due course.

New International Application Filed with the USPTO as a Receiving Office
If a new international application is being filed and the international application includes the necessary components for an international filing date (see PCT Article 11 and MPEP 1810), a Notification of the International Application Number and of the International Filing Date (Form PCT/RO/105) will be issued in due course, subject to prescriptions concerning national security, and the date shown on this Acknowledgement Receipt will establish the international filing date of the application.

IN THE UNITED STATES PATENT AND TRADEMARK OFFICE

In Application of:	Examiner: Koyama, Kumiko C.
Peter Zatloukal	Group Art Unit: 2887
Application No.: 10/560,262	Customer No.: 60,172
Filed: December 9, 2005	
Confirmation No.: 3358	
For: EMULATED RADIO FREQUENCY IDENTIFICATION	

Mail Stop RCE
Commissioner for Patents
PO Box 1450
Alexandria, VA 22313-1450

AMENDMENTS/REMARKS ACCOMPANYING REQUEST FOR CONTINUED EXAMINATION

Sir/Madam:

This communication is submitted in response to the Final Office Action (herein "FOA") mailed August 17, 2009 and the Advisory Action mailed November 13, 2009. Applicants respectfully request the Examiner to reconsider the rejections in a continued examination in light of the following amendments and remarks.

Amendments to Claims begins on page **2** of this response.

Remarks begin on page **8** of this response.

Listing of Claims

1. (Currently Amended) A method for providing a radio frequency identification (RFID) comprising:

facilitating a user in providing an instruction to a component of a mobile communication device to output a first data, said output emulating ~~an~~ output of the first data by an ~~active~~ RFID transponder of an active type, the component being also equipped to facilitate a user in communicating with a user of another communication device, with the communication being a voice call facilitated at least in part over a wireless network; and

in response to said providing an instruction, outputting the first data by the component in the form of a radio frequency signal, said outputting emulating output of the first data by an ~~active~~ RFID transponder of an active type.

2. (Previously Presented) The method of claim 1, wherein said component is a transceiver.

3. (Previously Presented) The method of claim 2, wherein said first data comprises a selected one of a security key and an identifier.

4. (Previously Presented) The method of claim 3, wherein said security key comprises a selected one of a garage door key, an exterior door key, an interior door key, and a motor vehicle door key.

5. (Original) The method of claim 2, wherein said first data comprises an identifier, and said identifier comprises a selected one of a social security number, a driver's license number, an affinity program account number, and a credit card number.

6. (Original) The method of claim 1, wherein the method further comprises facilitating the user in selecting the first data from a plurality of data using the mobile communication device.

7. (Original) The method of claim 1, wherein the method further comprises facilitating provision of the first data to the mobile communication device.

8. (Previously Presented) The method of claim 7, wherein said facilitating of the provisioning of the data to the mobile communication device includes facilitating provision of at least a signaling attribute associated with the outputting of the data in the form of a radio frequency signal.

9. (Currently Amended) The method of claim 1, wherein the method further comprises:

monitoring for proximal presence of a RFID reader by the mobile communication device; and

on detection of a RFID reader by the mobile communication device, outputting a second data in a form of a second radio frequency signal, using the mobile communication device, the outputting emulating output of the second data by a ~~passive~~ RFID transponder of a passive type.

10. (Previously Presented) The method of claim 9, wherein said monitoring comprises sensing for a probing radio frequency signal of the RFID reader by the mobile communication device.

11. (Original) The method of claim 9, wherein said first and second data are the same data.

12. (Original) The method of claim 1, wherein the mobile communication device is a selected one of a wireless mobile phone and a personal digital assistant equipped with communication capability.

13. (Currently Amended) A method for providing a radio frequency identifier (RFID), comprising:

monitoring for proximal presence of a RFID reader by a mobile communication device, the mobile communication device having a component equipped to receive a signal

from the RFID reader, the component being also equipped to facilitate a user in communicating with a user of another communication device, with the communication being a voice call facilitated at least in part over a wireless network; and

on detection of a RFID reader, outputting by the component a data in a form of a radio frequency signal, ~~using the mobile communication device,~~ said outputting emulating outputting of the data by a ~~passive~~ RFID transponder of a passive type.

14. (Previously Presented) The method of claim 13, wherein said monitoring comprises sensing for a probing radio frequency signal of the RFID reader by the mobile communication device.

15. (Original) The method of claim 13, wherein said data comprises a security key.

16. (Original) The method of claim 15, wherein said security key comprises a door key.

17. (Original) The method of claim 16, wherein said door key comprises a selected one of a garage door key, an exterior door key, an interior door key, and a motor vehicle door key.

18. (Original) The method of claim 13, wherein the method further comprises facilitating provision of the data to the mobile communication device.

19. (Original) The method of claim 18, wherein said facilitating of the provisioning of the data to the mobile communication device, including facilitating provision of at least a signaling attribute associated with the outputting of the data in the form of a radio frequency signal.

20. (Original) The method of claim 13, wherein the mobile communication device is a selected of a wireless mobile phone and a personal digital assistant equipped with communication capability.

21. (Currently Amended) A mobile communication device comprising:

a transmitter to transmit a radio frequency signal;

a storage medium to store a first data and instructions to operate the transmitter, the transmitter being operated to selectively (a) output a first data as a radio frequency signal, in response to a user instruction, said output emulating output of the first data by ~~an active~~a radio frequency identifier (RFID) transponder of an active type, and (b) facilitate a user to communicate with another user of another communication device, with the communication being a voice call facilitated at least in part over a wireless network; and

a processor coupled to the transmitter and the storage to execute the instructions.

22. (Original) The device of claim 21, wherein said first data comprises a selected one of a security key and an identifier.

23. (Original) The device of claim 22, wherein said first data comprises a security key, and said security key comprises a door key.

24. (Original) The device of claim 23, wherein said door key comprises a selected one of a garage door key, an exterior door key, an interior door key, and a motor vehicle door key.

25. (Original) The device of claim 22, wherein said first data comprises an identifier, and said identifier comprises a selected one of a social security number, a driver's license number, an affinity program account number, and a credit card number.

26. (Original) The device of claim 21, wherein the instructions are further designed to facilitate the user in selecting the first data from a plurality of data, and instructing said output.

27. (Original) The device of claim 21, wherein the instructions are further designed to facilitate provision of the first data to the mobile communication device.

28. (Original) The device of claim 27, wherein the instructions are further designed to include with said facilitating, provisioning of at least a signaling attribute associated with the outputting of the first data in the form of a radio frequency signal.

29. (Currently Amended) The device of claim 21, wherein the instructions are further designed to

monitor for proximal presence of a RFID reader; and

on detection of a RFID reader, output a second data in a form of a second radio frequency signal, emulating output of the second data by a ~~passive~~ RFID transponder of a passive type.

30. (Original) The device of claim 29, wherein the instructions are further designed to sense for a probing radio frequency signal of the RFID reader.

31. (Original) The device of claim 29, wherein said first and second data are the same data.

32. (Previously Presented) The device of claim 21, wherein the mobile communication device is a selected one of a wireless mobile phone and a personal digital assistant equipped with communication capability.

33. (Currently Amended) A mobile communication device comprising:

a transmitter to transmit a radio frequency signal;

a storage medium to store a first data and instructions to operate the transmitter to selectively (a) monitor for proximal presence of a radio frequency identifier (RFID) reader, and on detection of a RFID reader, output a data in the form of a radio frequency signal, said output emulating output of the data by a ~~passive~~ RFID transponder of a passive type, and (b) facilitate a user to communicate with another user of another communication device, with the communication being a voice call facilitated at least in part over a wireless network; and

a processor coupled to the transmitter and the storage to execute the instructions.

34. (Original) The device of claim 33, wherein said instructions are further designed to sense for a probing radio frequency signal of the RFID reader.

35. (Original) The device of claim 33, wherein said data comprises a security key.

36. (Original) The device of claim 35, wherein said security key comprises a door key.

37. (Original) The device of claim 36, wherein said door key comprises a selected one of a garage door key, an exterior door key, an interior door key, and a motor vehicle door key.

38. (Original) The device of claim 33, wherein the instructions are further designed to facilitate provision of the data to the mobile communication device.

39. (Original) The device of claim 38, wherein the instructions are further designed to include with said facilitating, provisioning of at least a signaling attribute associated with the outputting of the data in the form of a radio frequency signal.

40. (Original) The device of claim 33, wherein the mobile communication device is a selected of a wireless mobile phone and a personal digital assistant equipped with communication capability.

41.-60. (Cancelled)

REMARKS

Claims 1-40 were rejected and remain pending. Claims 41-60 were previously canceled. Claims 1, 9, 13, 21, 29 and 33 are currently amended. Reconsideration of the rejections is respectfully requested.

Claim Rejections – 35 U.S.C. § 102

In the Final Office Action ("FOA"), claims 1-40 were rejected under 35 U.S.C. § 102 (e) as being anticipated by U.S. Patent No. 6,771,981 to Zalewski.

In order to anticipate a claim, the reference must teach every element of the claim. MPEP 2131. "The identical invention must be shown in as complete detail as is contained in the ... claim." *Richardson v. Suzuki Motor Co.*, 868 F.2d 1226, 1236, 9 USPQ2d 1913, 1920 (Fed. Cir. 1989). The elements must be arranged as required by the claim, but this is not an *ipsissimis verbis* test, i.e., identity of terminology is not required. *In re Bond*, 910 F.2d 831, 15 USPQ2d 1566 (Fed. Cir. 1990).

While Applicants respectfully maintain that Zalewski fails to clearly and unambiguously teach the features of the pending independent claims, Applicants have nonetheless amended the independent claims without prejudice in order to advance prosecution.

As amended, claim 1 recites a method for providing a radio frequency identification (RFID) comprising:

facilitating a user in providing an instruction to a component of a mobile communication device to output a first data, said output emulating output of the first data by an RFID transponder of an active type, the component being also equipped to facilitate a user in communicating with a user of another communication device, with the communication being a voice call facilitated at least in part over a wireless network; and

in response to said providing an instruction, outputting the first data by the component in the form of a radio frequency signal, said outputting emulating output of the first data by an RFID transponder of an active type.

Claims must be given their broadest reasonable interpretation consistent with the specification, but the interpretation must be consistent with the interpretation that those skilled in the art would reach. MPEP 2111; *In re Cortright*, 165 F.3d 1353, 1359, 49 USPQ2d 1464, 1468 (Fed. Cir. 1999). The Advisory Action states that if a transponder is working properly and performing actions, it is considered as an "active" transponder. Applicants respectfully submit that a person having skill in the art will recognize that RFID transponders of an "active" type include their own power source and can transmit signals without first receiving an interrogation signal from a reader, while transponders of a "passive" type do not include their own power source and transmit signals only in response to an interrogation signal from a reader. Applicants have thus amended claim 1 to recite "an RFID transponder of an active type" to clarify that the outputting of the first data by the component emulates output of the first data by an RFID transponder that can transmit signals without first receiving an interrogation signal from a reader. This amendment is supported at least in Figures 1, 2, 4, and 7, and in paragraphs [0033]-[0039], [0064], and [0077]-[0080].

Applicants have also amended claim 1 to recite "with the communication being a voice call facilitated at least in part over a wireless network." This amendment is supported at least in Figures 1, 3, and 4, and in paragraphs [0025], [0030], and [0063]. Thus, as amended, claim 1 requires that the component outputting the first data in the form of a radio frequency signal [emulating output of the first data by a RFID transponder of an active type] is **also** "equipped to facilitate the user in communicating with a user of another communication device, with the communication being a voice call facilitated at least in part over a wireless network."

In summary, claim 1 as amended recites a novel method in which data is output by a component of a mobile communication device in a manner that emulates, or imitates, an output of that data by a RFID transponder of an active type. The component, which is also equipped to facilitate communication by voice over a wireless network, outputs the data in response to an instruction provided by the user.

Zalewski does not teach these features. Zalewski discloses a changeable electronic device cover 100 with a RFID transponder 110 (see abstract; col. 8, lines 35-38). The RF transponder provides RFID codes in response to interrogation by a reader. Zalewski also teaches that cover 100 may include optical relays or infrared transmitter/receiver 22 for transferring optical or infrared signals or equivalents (col. 8, lines 23-27; col. 15, lines 53-59). The mobile station and cover may be used to send a reservation request to a central reservation site 800 and receive in reply an ID code or other information. When the mobile station is placed near door lock 820, the door lock interrogates the cover 100 and the cover responds with the code to unlock the door (col. 16, lines 35-42 and 42-47).

Zalewski does not teach a mobile communication device component that is "equipped to facilitate a user in communicating with a user of another communication device, with the communication being a voice call facilitated at least in part over a wireless network" **and** outputs data "in the form of a radio frequency signal, said outputting emulating output of the first data by an RFID transponder of an active type." The radio frequency component 19 of the mobile device taught by Zalewski is "a known component of mobile phones" used for transmitting and receiving calls over a radio communication network (col. 6, line 66 – col. 7, line 3). The RFID transponder 110 is a separate component embedded in the removable cover 100. The RFID transponder 110 is not "equipped to facilitate a user in communicating" by "a voice call" in the manner recited in claim 1, nor does the radio frequency component 19 output data "emulating output . . . by an RFID transponder of an active type."

Further, Zalewski does not teach "*in response to said providing an instruction*, outputting the first data by the component *in the form of a radio frequency signal*, said outputting *emulating output of the first data by an RFID transponder of an active type*." Instead, Zalewski clearly teaches that the ID Code is sent to the door by the cover 100 (i.e. by RFID transponder 110) <u>in response to interrogation by the door lock</u>. Thus, RFID transponder 110 is acting as a <u>passive</u> RFID transponder. And the transmission of an ID code in an IR signal or optical signal cannot teach "outputting the first data" because claim 1 requires outputting of the first data by the component <u>in the form of a radio frequency signal</u>.

Finally, Zalewski does not teach "outputting the first data" [by the component] "in response to said providing an instruction" [by the user]. As discussed above, Zalewski teaches that the mobile device cover provides a code to the door lock in response to an interrogation signal sent by the door lock. While the Advisory Action stated that the interrogation signal is considered an "instruction," claim 1 requires that the instruction is provided *by the user*. Zalewski discloses a request sent by the user to the reservation site, to which the site responds by sending the code to the mobile device. But the interrogation signal sent by the door lock is not an instruction provided *by a user*, nor is the code provided by the RFID transponder in response to an instruction provided *by the user*.

Therefore, Zalewski does not teach the features of claim 1. For at least the above reasons, Applicants respectfully submit that claim 1 is patentable over Zalewski.

Claims 2-12 depend directly or indirectly from claim 1, incorporating its recitations, and are thus patentable over Zalewski for at least the same reasons and also for their additional recitations.

Independent claims 13, 21 and 33 were rejected for the same reasons as claim 1. These claims have been amended to recite subject matter substantially similar to that of claim 1, and are thus patentable over Zalewski for at least the same reasons.

Claims 14-20 depend from claim 13, incorporating its recitations. Claims 22-32 depend from claim 21, incorporating its recitations. Claims 34-40 depend from claim 33, incorporating its recitations. Therefore, claims 14-20, 22-32 and 34-40 are also allowable over Zalewski for at least the same reasons and also for their additional recitations.

For at least these reasons, Applicants submit that all pending claims are patentable over Zalewski. Notice of allowance is respectfully requested.

CONCLUSION

In view of the foregoing amendments and remarks, Applicants believe the applicable rejections have been overcome and all claims remaining in the application are presently in condition for allowance. Accordingly, favorable consideration and a Notice of Allowance are earnestly solicited. The Examiner is invited to telephone the undersigned representative at (206) 622-1711 if the Examiner believes that an interview might be useful for any reason.

It is not believed that extensions of time are required beyond those that may otherwise be provided for in documents accompanying this paper. However, if additional extensions of time are necessary to prevent abandonment of this application, then such extensions of time are hereby petitioned under 37 C.F.R. § 1.136(a).

If the Examiner has any questions concerning the present paper, the Examiner is kindly requested to contact the undersigned at (206) 622-1711. If any fees are due in connection with filing this paper, the Commissioner is authorized to charge the Deposit Account of Schwabe, Williamson and Wyatt, P.C., No. 50-0393.

Respectfully submitted,
SCHWABE, WILLIAMSON & WYATT, P.C.

Date: December 10 , 2009 by: ____/JoAnn Schmidt/_____
JoAnn Schmidt
Reg. No.: 62,255

Schwabe, Williamson & Wyatt, P.C.
US Bank Centre
1420 5th Avenue, Suite 3010
Seattle, WA 98101
Telephone: 206.622.1711

PTO/SB/06 (07-06)
Approved for use through 1/31/2007. OMB 0651-0032
U.S. Patent and Trademark Office; U.S. DEPARTMENT OF COMMERCE
Under the Paperwork Reduction Act of 1995, no persons are required to respond to a collection of information unless it displays a valid OMB control number.

PATENT APPLICATION FEE DETERMINATION RECORD

Substitute for Form PTO-875

Application or Docket Number	Filing Date	
10/560,262	12/09/2005	☐ To be Mailed

APPLICATION AS FILED – PART I

FOR	(Column 1) NUMBER FILED	(Column 2) NUMBER EXTRA	SMALL ENTITY ☐ RATE ($)	SMALL ENTITY FEE ($)	OR	OTHER THAN SMALL ENTITY RATE ($)	OTHER THAN SMALL ENTITY FEE ($)
☐ BASIC FEE (37 CFR 1.16(a), (b), or (c))	N/A	N/A	N/A			N/A	
☐ SEARCH FEE (37 CFR 1.16(k), (i), or (m))	N/A	N/A	N/A			N/A	
☐ EXAMINATION FEE (37 CFR 1.16(o), (p), or (q))	N/A	N/A	N/A			N/A	
TOTAL CLAIMS (37 CFR 1.16(i))	minus 20 =	*	X $ =		OR	X $ =	
INDEPENDENT CLAIMS (37 CFR 1.16(h))	minus 3 =	*	X $ =			X $ =	
☐ APPLICATION SIZE FEE (37 CFR 1.16(s))	If the specification and drawings exceed 100 sheets of paper, the application size fee due is $250 ($125 for small entity) for each additional 50 sheets or fraction thereof. See 35 U.S.C. 41(a)(1)(G) and 37 CFR 1.16(s).						
☐ MULTIPLE DEPENDENT CLAIM PRESENT (37 CFR 1.16(j))							
* If the difference in column 1 is less than zero, enter "0" in column 2.			TOTAL			TOTAL	

APPLICATION AS AMENDED – PART II

AMENDMENT

12/10/2009	(Column 1) CLAIMS REMAINING AFTER AMENDMENT		(Column 2) HIGHEST NUMBER PREVIOUSLY PAID FOR	(Column 3) PRESENT EXTRA	SMALL ENTITY RATE ($)	SMALL ENTITY ADDITIONAL FEE ($)	OR	OTHER THAN SMALL ENTITY RATE ($)	OTHER THAN SMALL ENTITY ADDITIONAL FEE ($)
Total (37 CFR 1.16(i))	* 40	Minus	** 40	= 0	X $ =		OR	X $52=	0
Independent (37 CFR 1.16(h))	* 4	Minus	***4	= 0	X $ =		OR	X $220=	0
☐ Application Size Fee (37 CFR 1.16(s))									
☐ FIRST PRESENTATION OF MULTIPLE DEPENDENT CLAIM (37 CFR 1.16(j))							OR		
					TOTAL ADD'L FEE		OR	TOTAL ADD'L FEE	0

AMENDMENT

	(Column 1) CLAIMS REMAINING AFTER AMENDMENT		(Column 2) HIGHEST NUMBER PREVIOUSLY PAID FOR	(Column 3) PRESENT EXTRA	RATE ($)	ADDITIONAL FEE ($)		RATE ($)	ADDITIONAL FEE ($)
Total (37 CFR 1.16(i))	*	Minus	**	=	X $ =		OR	X $ =	
Independent (37 CFR 1.16(h))	*	Minus	***	=	X $ =		OR	X $ =	
☐ Application Size Fee (37 CFR 1.16(s))									
☐ FIRST PRESENTATION OF MULTIPLE DEPENDENT CLAIM (37 CFR 1.16(j))							OR		
					TOTAL ADD'L FEE		OR	TOTAL ADD'L FEE	

* If the entry in column 1 is less than the entry in column 2, write "0" in column 3.
** If the "Highest Number Previously Paid For" IN THIS SPACE is less than 20, enter "20".
*** If the "Highest Number Previously Paid For" IN THIS SPACE is less than 3, enter "3".
The "Highest Number Previously Paid For" (Total or Independent) is the highest number found in the appropriate box in column 1.

Legal Instrument Examiner:
/Theresa Dawkins/

This collection of information is required by 37 CFR 1.16. The information is required to obtain or retain a benefit by the public which is to file (and by the USPTO to process) an application. Confidentiality is governed by 35 U.S.C. 122 and 37 CFR 1.14. This collection is estimated to take 12 minutes to complete, including gathering, preparing, and submitting the completed application form to the USPTO. Time will vary depending upon the individual case. Any comments on the amount of time you require to complete this form and/or suggestions for reducing this burden, should be sent to the Chief Information Officer, U.S. Patent and Trademark Office, U.S. Department of Commerce, P.O. Box 1450, Alexandria, VA 22313-1450. DO NOT SEND FEES OR COMPLETED FORMS TO THIS ADDRESS. **SEND TO: Commissioner for Patents, P.O. Box 1450, Alexandria, VA 22313-1450.**
If you need assistance in completing the form, call 1-800-PTO-9199 and select option 2.

Ok to Enter upon filing of Appeal Brief. 11/04/2009 /KCK/

IN THE UNITED STATES PATENT AND TRADEMARK OFFICE

In Application of:

Peter Zatloukal

Application No.: 10/560,262

Filed: December 9, 2005

Confirmation No.: 3358

For: EMULATED RADIO FREQUENCY IDENTIFICATION

Examiner: Koyama, Kumiko C.

Group Art Unit: 2887

Customer No.: 60,172

Mail Stop Amendment
Commissioner for Patents
PO Box 1450
Alexandria, VA 22313-1450

AFTER FINAL RESPONSE TO OFFICE ACTION

Sir/Madam:

This communication is submitted in response to the Final Office Action (herein "FOA") mailed August 17, 2009. Applicants respectfully request the Examiner to reconsider the rejections in light of the following remarks.

Listing of Claims begins on page **2** of this response.

Remarks begin on page **8** of this response.

UNITED STATES PATENT AND TRADEMARK OFFICE

UNITED STATES DEPARTMENT OF COMMERCE
United States Patent and Trademark Office
Address: COMMISSIONER FOR PATENTS
P.O. Box 1450
Alexandria, Virginia 22313-1450
www.uspto.gov

APPLICATION NO.	FILING DATE	FIRST NAMED INVENTOR	ATTORNEY DOCKET NO.	CONFIRMATION NO.
10/560,262	12/09/2005	Peter Zatloukal	120083-146181	3358

60172 7590 11/13/2009
SCHWABE, WILLIAMSON & WYATT, P.C.
1420 FIFTH, SUITE 3010
SEATTLE, WA 98101

EXAMINER
KOYAMA, KUMIKO C

ART UNIT	PAPER NUMBER
2887	

MAIL DATE	DELIVERY MODE
11/13/2009	PAPER

Please find below and/or attached an Office communication concerning this application or proceeding.

The time period for reply, if any, is set in the attached communication.

PTOL-90A (Rev. 04/07)

Advisory Action Before the Filing of an Appeal Brief	**Application No.** 10/560,262	**Applicant(s)** ZATLOUKAL ET AL.	
	Examiner KUMIKO C. KOYAMA	**Art Unit** 2887	

--The MAILING DATE of this communication appears on the cover sheet with the correspondence address --

THE REPLY FILED 19 October 2009 FAILS TO PLACE THIS APPLICATION IN CONDITION FOR ALLOWANCE.

1. ☒ The reply was filed after a final rejection, but prior to or on the same day as filing a Notice of Appeal. To avoid abandonment of this application, applicant must timely file one of the following replies: (1) an amendment, affidavit, or other evidence, which places the application in condition for allowance; (2) a Notice of Appeal (with appeal fee) in compliance with 37 CFR 41.31; or (3) a Request for Continued Examination (RCE) in compliance with 37 CFR 1.114. The reply must be filed within one of the following time periods:
   a) ☐ The period for reply expires _____months from the mailing date of the final rejection.
   b) ☒ The period for reply expires on: (1) the mailing date of this Advisory Action, or (2) the date set forth in the final rejection, whichever is later. In no event, however, will the statutory period for reply expire later than SIX MONTHS from the mailing date of the final rejection.
   Examiner Note: If box 1 is checked, check either box (a) or (b). ONLY CHECK BOX (b) WHEN THE FIRST REPLY WAS FILED WITHIN TWO MONTHS OF THE FINAL REJECTION. See MPEP 706.07(f).

Extensions of time may be obtained under 37 CFR 1.136(a). The date on which the petition under 37 CFR 1.136(a) and the appropriate extension fee have been filed is the date for purposes of determining the period of extension and the corresponding amount of the fee. The appropriate extension fee under 37 CFR 1.17(a) is calculated from: (1) the expiration date of the shortened statutory period for reply originally set in the final Office action; or (2) as set forth in (b) above, if checked. Any reply received by the Office later than three months after the mailing date of the final rejection, even if timely filed, may reduce any earned patent term adjustment. See 37 CFR 1.704(b).

NOTICE OF APPEAL

2. ☐ The Notice of Appeal was filed on _____. A brief in compliance with 37 CFR 41.37 must be filed within two months of the date of filing the Notice of Appeal (37 CFR 41.37(a)), or any extension thereof (37 CFR 41.37(e)), to avoid dismissal of the appeal. Since a Notice of Appeal has been filed, any reply must be filed within the time period set forth in 37 CFR 41.37(a).

AMENDMENTS

3. ☐ The proposed amendment(s) filed after a final rejection, but prior to the date of filing a brief, will not be entered because
   (a) ☐ They raise new issues that would require further consideration and/or search (see NOTE below);
   (b) ☐ They raise the issue of new matter (see NOTE below);
   (c) ☐ They are not deemed to place the application in better form for appeal by materially reducing or simplifying the issues for appeal; and/or
   (d) ☐ They present additional claims without canceling a corresponding number of finally rejected claims.
   NOTE: _____. (See 37 CFR 1.116 and 41.33(a)).
4. ☐ The amendments are not in compliance with 37 CFR 1.121. See attached Notice of Non-Compliant Amendment (PTOL-324).
5. ☐ Applicant's reply has overcome the following rejection(s): _____.
6. ☐ Newly proposed or amended claim(s) _____ would be allowable if submitted in a separate, timely filed amendment canceling the non-allowable claim(s).
7. ☒ For purposes of appeal, the proposed amendment(s): a) ☐ will not be entered, or b) ☒ will be entered and an explanation of how the new or amended claims would be rejected is provided below or appended.
   The status of the claim(s) is (or will be) as follows:
   Claim(s) allowed: _____.
   Claim(s) objected to: _____.
   Claim(s) rejected: *1-40*.
   Claim(s) withdrawn from consideration: _____.

AFFIDAVIT OR OTHER EVIDENCE

8. ☐ The affidavit or other evidence filed after a final action, but before or on the date of filing a Notice of Appeal will not be entered because applicant failed to provide a showing of good and sufficient reasons why the affidavit or other evidence is necessary and was not earlier presented. See 37 CFR 1.116(e).
9. ☐ The affidavit or other evidence filed after the date of filing a Notice of Appeal, but prior to the date of filing a brief, will not be entered because the affidavit or other evidence failed to overcome all rejections under appeal and/or appellant fails to provide a showing a good and sufficient reasons why it is necessary and was not earlier presented. See 37 CFR 41.33(d)(1).
10. ☐ The affidavit or other evidence is entered. An explanation of the status of the claims after entry is below or attached.

REQUEST FOR RECONSIDERATION/OTHER

11. ☒ The request for reconsideration has been considered but does NOT place the application in condition for allowance because: See Continuation Sheet.
12. ☐ Note the attached Information *Disclosure Statement*(s). (PTO/SB/08) Paper No(s). _____
13. ☐ Other: _____.

/Kumiko C. Koyama/
Primary Examiner, Art Unit 2887

Continuation of 11. does NOT place the application in condition for allowance because: Applicant submits that the prior art fails to teach an emulated RFID signal. However, the Examiner points out that the claim does not recite what exactly is considered as an emulated signal. Without such exact description and the limitation reciting "outputting the first data in the form of a radio frequency signal, the Examiner believes that an RFID signal can also be read on the emulated RFID signal limitation. The Applicant also submits that Zalewski teaches a passive transponder and not an active transponder. The limitation merely states "an active RFID transponder". The Examiner believes if the transponder is working properly and performing actions, it is considered as an "active" transponder. The Applicant submits that Zalewski fails to teach an instruction. However, the Examiner disagrees because an interrogation signal instigates the device to send an identifier, and such interrogation signal is considered as an instruction. Unless the claim recites what the instruction is actually doing or what is considered as an "instruction," the Examiner believes that the prior art reads on the current limitation.

IN THE UNITED STATES PATENT AND TRADEMARK OFFICE

In Application of:	Examiner: Koyama, Kumiko C.
Peter Zatloukal	Group Art Unit: 2887
Application No.: 10/560,262	Customer No.: 60,172
Filed: December 9, 2005	
Confirmation No.: 3358	
For: EMULATED RADIO FREQUENCY IDENTIFICATION	

Mail Stop Amendment
Commissioner for Patents
PO Box 1450
Alexandria, VA 22313-1450

AFTER FINAL RESPONSE TO OFFICE ACTION

Sir/Madam:

This communication is submitted in response to the Final Office Action (herein "FOA") mailed August 17, 2009. Applicants respectfully request the Examiner to reconsider the rejections in light of the following remarks.

Listing of Claims begins on page **2** of this response.

Remarks begin on page **8** of this response.

Listing of Claims

1. (Previously Presented) A method for providing a radio frequency identification (RFID) comprising:

facilitating a user in providing an instruction to a component of a mobile communication device to output a first data, said output emulating an output of the first data by an active RFID transponder, the component being also equipped to facilitate a user in communicating with a user of another communication device, with the communication being facilitated at least in part over a wireless network; and

in response to said providing an instruction, outputting the first data in the form of a radio frequency signal, said outputting emulating output of the first data by an active RFID transponder.

2. (Previously Presented) The method of claim 1, wherein said component is a transceiver.

3. (Previously Presented) The method of claim 2, wherein said first data comprises a selected one of a security key and an identifier.

4. (Previously Presented) The method of claim 3, wherein said security key comprises a selected one of a garage door key, an exterior door key, an interior door key, and a motor vehicle door key.

5. (Original) The method of claim 2, wherein said first data comprises an identifier, and said identifier comprises a selected one of a social security number, a driver's license number, an affinity program account number, and a credit card number.

6. (Original) The method of claim 1, wherein the method further comprises facilitating the user in selecting the first data from a plurality of data using the mobile communication device.

7. (Original) The method of claim 1, wherein the method further comprises facilitating provision of the first data to the mobile communication device.

8. (Previously Presented) The method of claim 7, wherein said facilitating of the provisioning of the data to the mobile communication device includes facilitating provision of at least a signaling attribute associated with the outputting of the data in the form of a radio frequency signal.

9. (Previously Presented) The method of claim 1, wherein the method further comprises:

monitoring for proximal presence of a RFID reader by the mobile communication device; and

on detection of a RFID reader by the mobile communication device, outputting a second data in a form of a second radio frequency signal, using the mobile communication device, emulating output of the second data by a passive RFID transponder.

10. (Previously Presented) The method of claim 9, wherein said monitoring comprises sensing for a probing radio frequency signal of the RFID reader by the mobile communication device.

11. (Original) The method of claim 9, wherein said first and second data are the same data.

12. (Original) The method of claim 1, wherein the mobile communication device is a selected one of a wireless mobile phone and a personal digital assistant equipped with communication capability.

13. (Previously Presented) A method for providing a radio frequency identifier (RFID), comprising:

monitoring for proximal presence of a RFID reader by a mobile communication device, the mobile communication device being also equipped to facilitate a user in

communicating with a user of another communication device, with the communication being facilitated at least in part over a wireless network; and

on detection of a RFID reader, outputting a data in a form of a radio frequency signal, using the mobile communication device, said outputting emulating outputting of the data by a passive RFID transponder.

14. (Previously Presented) The method of claim 13, wherein said monitoring comprises sensing for a probing radio frequency signal of the RFID reader by the mobile communication device.

15. (Original) The method of claim 13, wherein said data comprises a security key.

16. (Original) The method of claim 15, wherein said security key comprises a door key.

17. (Original) The method of claim 16, wherein said door key comprises a selected one of a garage door key, an exterior door key, an interior door key, and a motor vehicle door key.

18. (Original) The method of claim 13, wherein the method further comprises facilitating provision of the data to the mobile communication device.

19. (Original) The method of claim 18, wherein said facilitating of the provisioning of the data to the mobile communication device, including facilitating provision of at least a signaling attribute associated with the outputting of the data in the form of a radio frequency signal.

20. (Original) The method of claim 13, wherein the mobile communication device is a selected of a wireless mobile phone and a personal digital assistant equipped with communication capability.

21. (Previously Presented) A mobile communication device comprising:

a transmitter to transmit a radio frequency signal;

a storage medium to store a first data and instructions to operate the transmitter, the transmitter being operated to selectively (a) output [[the]] a first data as a radio frequency signal, in response to a user instruction, said output emulating output of the first data by an active radio frequency identifier (RFID) transponder, and (b) facilitate a user to communicate with another user of another communication device, with the communication being facilitated at least in part over a wireless network; and

a processor coupled to the transmitter and the storage to execute the instructions.

22. (Original) The device of claim 21, wherein said first data comprises a selected one of a security key and an identifier.

23. (Original) The device of claim 22, wherein said first data comprises a security key, and said security key comprises a door key.

24. (Original) The device of claim 23, wherein said door key comprises a selected one of a garage door key, an exterior door key, an interior door key, and a motor vehicle door key.

25. (Original) The device of claim 22, wherein said first data comprises an identifier, and said identifier comprises a selected one of a social security number, a driver's license number, an affinity program account number, and a credit card number.

26. (Original) The device of claim 21, wherein the instructions are further designed to facilitate the user in selecting the first data from a plurality of data, and instructing said output.

27. (Original) The device of claim 21, wherein the instructions are further designed to facilitate provision of the first data to the mobile communication device.

28. (Original) The device of claim 27, wherein the instructions are further designed to include with said facilitating, provisioning of at least a signaling attribute associated with the outputting of the first data in the form of a radio frequency signal.

29. (Previously Presented) The device of claim 21, wherein the instructions are further designed to

monitor for proximal presence of a RFID reader; and

on detection of a RFID reader, output a second data in a form of a second radio frequency signal, emulating output of the second data by a passive RFID transponder.

30. (Original) The device of claim 29, wherein the instructions are further designed to sense for a probing radio frequency signal of the RFID reader.

31. (Original) The device of claim 29, wherein said first and second data are the same data.

32. (Previously Presented) The device of claim 21, wherein the mobile communication device is a selected one of a wireless mobile phone and a personal digital assistant equipped with communication capability.

33. (Previously Presented) A mobile communication device comprising:

a transmitter to transmit a radio frequency signal;

a storage medium to store a first data and instructions to operate the transmitter to selectively (a) monitor for proximal presence of a radio frequency identifier (RFID) reader, and on detection of a RFID reader, output a data in [[a]] the form of a radio frequency signal, said output emulating output of the data by a passive RFID transponder, and (b) facilitate a user to communicate with another user of another communication device, with the communication being facilitated at least in part over a wireless network; and

a processor coupled to the transmitter and the storage to execute the instructions.

34. (Original) The device of claim 33, wherein said instructions are further designed to sense for a probing radio frequency signal of the RFID reader.

35. (Original) The device of claim 33, wherein said data comprises a security key.

36. (Original) The device of claim 35, wherein said security key comprises a door key.

37. (Original) The device of claim 36, wherein said door key comprises a selected one of a garage door key, an exterior door key, an interior door key, and a motor vehicle door key.

38. (Original) The device of claim 33, wherein the instructions are further designed to facilitate provision of the data to the mobile communication device.

39. (Original) The device of claim 38, wherein the instructions are further designed to include with said facilitating, provisioning of at least a signaling attribute associated with the outputting of the data in the form of a radio frequency signal.

40. (Original) The device of claim 33, wherein the mobile communication device is a selected of a wireless mobile phone and a personal digital assistant equipped with communication capability.

41.-60. (Cancelled)

REMARKS

Claims 1-40 were rejected and remain pending. Claims 41-60 were previously canceled. Reconsideration of the rejections is respectfully requested.

Claim Rejections – 35 U.S.C. § 102

In the Final Office Action ("FOA"), claims 1-40 were rejected under 35 U.S.C. § 102 (e) as being anticipated by U.S. Patent No. 6,771,981 to Zalewski.

In order to anticipate a claim, the reference must teach every element of the claim. MPEP 2131. "The identical invention must be shown in as complete detail as is contained in the ... claim." *Richardson v. Suzuki Motor Co.*, 868 F.2d 1226, 1236, 9 USPQ2d 1913, 1920 (Fed. Cir. 1989). The elements must be arranged as required by the claim, but this is not an *ipsissimis verbis* test, i.e., identity of terminology is not required. *In re Bond*, 910 F.2d 831, 15 USPQ2d 1566 (Fed. Cir. 1990).

For reasons set forth below, Applicants respectfully submit that Zalewski fails to clearly and unambiguously teach at least one of the features of each independent claim of claims 1-40.

Claim 1, e.g., recites a method for providing a radio frequency identification (RFID) comprising:

facilitating a user in providing an instruction to a component of a mobile communication device to output a first data, said output emulating an output of the first data by an active RFID transponder, the component being also equipped to facilitate a user in communicating with a user of another communication device, with the communication being facilitated at least in part over a wireless network; and

in response to said providing an instruction, outputting the first data in the form of a radio frequency signal, said outputting emulating output of the first data by an active RFID transponder.

Therefore, claim 1 recites a novel method in which an emulated radio frequency identification (RFID) is provided by a mobile communication device. The RFID emulates a transmission of an ***active*** RFID transponder, and is transmitted "***in response to said providing an instruction***." Further, the mobile communication device includes a component that is equipped to facilitate communication with users of other mobile devices over a wireless network, and the ***same*** component is also to facilitate a user in providing the instruction to the mobile communication device to output the emulated RFID.

To support the Examiner's rejections, the Examiner reasoned that Zalewski teaches embedding a RF transponder in a changeable cover 100, which can be attached to a mobile station. The RF transponder is interrogated by a reader and provides RFID codes in response. Zalewski further teaches that cover 100 may also include optical relays for transferring optical signals, or equivalents such as EM energy sensors, or optical devices such as DWMA or SAW (col. 8, lines 23-27). Further, the Examiner asserted that Zalewski also teaches that a user may use the mobile station to send a reservation request to a central reservation site 800. The central reservation site 800 may reply with a room number, ID code, directions, or other information sent to the mobile device. The user then proceeds to the room and places mobile station 4 near the door lock 820. The door lock interrogates the cover 100, and the cover responds with the code from the central reservation site, unlocking the door (col. 16, lines 35-42 and 42-47).

First of all, in the above passage, Zalewski merely disclosed that the ID code received from the server is "sent" to the door. Zalewski did not explicitly state how the ID code is sent to the door. In addition to the RFID transponder, Zalewski teaches that the cover may be equipped for optical or other signaling means. If the ID code is sent by the cover's RF transponder, then the ID code is sent as an RFID, ***not an emulated RFID signal.***

On the other hand, if the ID Code is sent using the optical or equivalent signaling means, it can be sent in accordance with any one of a number communication protocols; it is not inherent that the ID code must be sent as an ***emulated RFID signal.***

Even if we ignore the foregoing, and assume arguendo that the ID code is sent as ***an emulated RFID signal,*** Zalewski clearly teaches that the ID Code is sent to the door in

response to the interrogation of the door. Thus, at best, Zalewski anticipates emulating a RFID transmission of a ***passive*** RF transponder (responsive transmission), and not emulating an ***active*** RFID transponder (transmitting RFID on its own and not necessarily responding to any interrogation).

Further, Zalewski clearly fails to anticipate the recitation of claim 1 requiring the emulated RFID signal to be provided "in response to said instruction" The instruction from the user to the communication device to contact a remote server to obtain an access ID cannot be said to read as clearly and unambiguously teaching or anticipating the recitation of claim 1, which requires "providing an instruction to the communication device to output a first data, said output emulating an output of the first data by an active RFID transponder." It follows that Zalewski cannot be read as providing ***such*** an instruction to a component of the communication device that is also responsible for facilitating wireless communication.

As noted earlier, rejections under section 102 require clear and unambiguous teaching from the single reference. For at least the above reasons, Applicants respectfully submit that claim 1 is patentable over Zalewski.

Claims 2-12 depend directly or indirectly from claim 1, incorporating its recitations, and are thus patentable over Zalewski for at least the same reasons.

Independent claims 13, 21 and 33 were rejected for the same reasons as claim 1. These claims recite subject matter substantially similar to that of claim 1, and are thus patentable over Zalewski for at least the same reasons.

Claims 14-20 depend from claim 13, incorporating its recitations. Claims 22-32 depend from claim 21, incorporating its recitations. Claims 34-40 depend from claim 33, incorporating its recitations. Therefore, claims 14-20, 22-32 and 34-40 are also allowable over Zalewski for at least the same reasons.

In addition, the dependent claims are further patentable over Zalewski by virtue of their additional recitations. For examples, claims 9-11, 14-20, 29-31 and 33-40 additionally recite or incorporate the recitation of "monitoring for proximal presence of a RFID reader ***by a mobile communication device***" or a substantially similar feature. Page 3 of the FOA states with regard to this feature that "[s]ince the cover 100 responds to the interrogation of the door lock, the cover 100 is monitoring for proximal presence of the RFID reader." Applicants agree with the Examiner. Since Zalewski's cover does not include the component for performing wireless communication, Zalewski's cover does not anticipate the ***communication device*** recited in the independent claims. And since a ***non-communication device cover*** performs the monitoring in Zalewski, Zalewski fails to teach or anticipate the required "monitoring by the mobile communication device" recited.

For at least these reasons, Applicants submit that all pending claims are patentable over Zalewski. Notice of allowance is respectfully requested.

CONCLUSION

In view of the foregoing amendments and remarks, Applicants believe the applicable rejections have been overcome and all claims remaining in the application are presently in condition for allowance. Accordingly, favorable consideration and a Notice of Allowance are earnestly solicited. The Examiner is invited to telephone the undersigned representative at (206) 622-1711 if the Examiner believes that an interview might be useful for any reason.

It is not believed that extensions of time are required beyond those that may otherwise be provided for in documents accompanying this paper. However, if additional extensions of time are necessary to prevent abandonment of this application, then such extensions of time are hereby petitioned under 37 C.F.R. § 1.136(a).

If the Examiner has any questions concerning the present paper, the Examiner is kindly requested to contact the undersigned at (206) 622-1711. If any fees are due in connection with filing this paper, the Commissioner is authorized to charge the Deposit Account of Schwabe, Williamson and Wyatt, P.C., No. 50-0393.

Respectfully submitted,
SCHWABE, WILLIAMSON & WYATT, P.C.

Date: October 19, 2009 by: /JoAnn Schmidt
JoAnn Schmidt
Reg. No.: 62,255

Schwabe, Williamson & Wyatt, P.C.
US Bank Centre
1420 5th Avenue, Suite 3010
Seattle, WA 98101
Telephone: 206.622.1711

Electronic Acknowledgement Receipt

EFS ID:	6287212
Application Number:	10560262
International Application Number:	
Confirmation Number:	3358
Title of Invention:	Emulated radio frequency identification
First Named Inventor/Applicant Name:	Peter Zatloukal
Customer Number:	60172
Filer:	Jo Ann Schmidt/Allyson Dahmen
Filer Authorized By:	Jo Ann Schmidt
Attorney Docket Number:	120083-146181
Receipt Date:	19-OCT-2009
Filing Date:	09-DEC-2005
Time Stamp:	17:41:42
Application Type:	U.S. National Stage under 35 USC 371

Payment information:

Submitted with Payment	no

File Listing:

Document Number	Document Description	File Name	File Size(Bytes)/ Message Digest	Multi Part /.zip	Pages (if appl.)
1		Varia_P064_Resp_to_Final_OA.pdf	441543 a8767bfdd805481603f4cdf0d3c16a83efc5b365	yes	12

	Multipart Description/PDF files in .zip description		
	Document Description	**Start**	**End**
	Amendment After Final	1	1
	Claims	2	7
	Amendment/Req. Reconsideration-After Non-Final Reject	8	12
Warnings:			
Information:			
	Total Files Size (in bytes):	441543	

This Acknowledgement Receipt evidences receipt on the noted date by the USPTO of the indicated documents, characterized by the applicant, and including page counts, where applicable. It serves as evidence of receipt similar to a Post Card, as described in MPEP 503.

New Applications Under 35 U.S.C. 111
If a new application is being filed and the application includes the necessary components for a filing date (see 37 CFR 1.53(b)-(d) and MPEP 506), a Filing Receipt (37 CFR 1.54) will be issued in due course and the date shown on this Acknowledgement Receipt will establish the filing date of the application.

National Stage of an International Application under 35 U.S.C. 371
If a timely submission to enter the national stage of an international application is compliant with the conditions of 35 U.S.C. 371 and other applicable requirements a Form PCT/DO/EO/903 indicating acceptance of the application as a national stage submission under 35 U.S.C. 371 will be issued in addition to the Filing Receipt, in due course.

New International Application Filed with the USPTO as a Receiving Office
If a new international application is being filed and the international application includes the necessary components for an international filing date (see PCT Article 11 and MPEP 1810), a Notification of the International Application Number and of the International Filing Date (Form PCT/RO/105) will be issued in due course, subject to prescriptions concerning national security, and the date shown on this Acknowledgement Receipt will establish the international filing date of the application.

PTO/SB/06 (07-06)
Approved for use through 1/31/2007. OMB 0651-0032
U.S. Patent and Trademark Office; U.S. DEPARTMENT OF COMMERCE
Under the Paperwork Reduction Act of 1995, no persons are required to respond to a collection of information unless it displays a valid OMB control number.

PATENT APPLICATION FEE DETERMINATION RECORD

Substitute for Form PTO-875

Application or Docket Number	Filing Date	
10/560,262	12/09/2005	☐ To be Mailed

APPLICATION AS FILED – PART I

FOR	(Column 1) NUMBER FILED	(Column 2) NUMBER EXTRA	SMALL ENTITY ☐ RATE ($)	SMALL ENTITY FEE ($)	OR	OTHER THAN SMALL ENTITY RATE ($)	OTHER THAN SMALL ENTITY FEE ($)
☐ BASIC FEE (37 CFR 1.16(a), (b), or (c))	N/A	N/A	N/A			N/A	
☐ SEARCH FEE (37 CFR 1.16(k), (i), or (m))	N/A	N/A	N/A			N/A	
☐ EXAMINATION FEE (37 CFR 1.16(o), (p), or (q))	N/A	N/A	N/A			N/A	
TOTAL CLAIMS (37 CFR 1.16(i))	minus 20 =	*	X $ =		OR	X $ =	
INDEPENDENT CLAIMS (37 CFR 1.16(h))	minus 3 =	*	X $ =			X $ =	
☐ APPLICATION SIZE FEE (37 CFR 1.16(s))	If the specification and drawings exceed 100 sheets of paper, the application size fee due is $250 ($125 for small entity) for each additional 50 sheets or fraction thereof. See 35 U.S.C. 41(a)(1)(G) and 37 CFR 1.16(s).						
☐ MULTIPLE DEPENDENT CLAIM PRESENT (37 CFR 1.16(j))							
* If the difference in column 1 is less than zero, enter "0" in column 2.			TOTAL			TOTAL	

APPLICATION AS AMENDED – PART II

AMENDMENT

10/19/2009	(Column 1) CLAIMS REMAINING AFTER AMENDMENT		(Column 2) HIGHEST NUMBER PREVIOUSLY PAID FOR	(Column 3) PRESENT EXTRA	SMALL ENTITY RATE ($)	SMALL ENTITY ADDITIONAL FEE ($)	OR	OTHER THAN SMALL ENTITY RATE ($)	OTHER THAN SMALL ENTITY ADDITIONAL FEE ($)
Total (37 CFR 1.16(i))	* 40	Minus	** 40	= 0	X $ =		OR	X $52=	0
Independent (37 CFR 1.16(h))	* 4	Minus	***4	= 0	X $ =		OR	X $220=	0
☐ Application Size Fee (37 CFR 1.16(s))									
☐ FIRST PRESENTATION OF MULTIPLE DEPENDENT CLAIM (37 CFR 1.16(j))							OR		
					TOTAL ADD'L FEE		OR	TOTAL ADD'L FEE	0

AMENDMENT

	(Column 1) CLAIMS REMAINING AFTER AMENDMENT		(Column 2) HIGHEST NUMBER PREVIOUSLY PAID FOR	(Column 3) PRESENT EXTRA	RATE ($)	ADDITIONAL FEE ($)		RATE ($)	ADDITIONAL FEE ($)
Total (37 CFR 1.16(i))	*	Minus	**	=	X $ =		OR	X $ =	
Independent (37 CFR 1.16(h))	*	Minus	***	=	X $ =		OR	X $ =	
☐ Application Size Fee (37 CFR 1.16(s))									
☐ FIRST PRESENTATION OF MULTIPLE DEPENDENT CLAIM (37 CFR 1.16(j))							OR		
					TOTAL ADD'L FEE		OR	TOTAL ADD'L FEE	

* If the entry in column 1 is less than the entry in column 2, write "0" in column 3.
** If the "Highest Number Previously Paid For" IN THIS SPACE is less than 20, enter "20".
*** If the "Highest Number Previously Paid For" IN THIS SPACE is less than 3, enter "3".
The "Highest Number Previously Paid For" (Total or Independent) is the highest number found in the appropriate box in column 1.

Legal Instrument Examiner:
/DONNA L. PRICE/

This collection of information is required by 37 CFR 1.16. The information is required to obtain or retain a benefit by the public which is to file (and by the USPTO to process) an application. Confidentiality is governed by 35 U.S.C. 122 and 37 CFR 1.14. This collection is estimated to take 12 minutes to complete, including gathering, preparing, and submitting the completed application form to the USPTO. Time will vary depending upon the individual case. Any comments on the amount of time you require to complete this form and/or suggestions for reducing this burden, should be sent to the Chief Information Officer, U.S. Patent and Trademark Office, U.S. Department of Commerce, P.O. Box 1450, Alexandria, VA 22313-1450. DO NOT SEND FEES OR COMPLETED FORMS TO THIS ADDRESS. **SEND TO: Commissioner for Patents, P.O. Box 1450, Alexandria, VA 22313-1450.**
If you need assistance in completing the form, call 1-800-PTO-9199 and select option 2.

UNITED STATES PATENT AND TRADEMARK OFFICE

UNITED STATES DEPARTMENT OF COMMERCE
United States Patent and Trademark Office
Address: COMMISSIONER FOR PATENTS
P.O. Box 1450
Alexandria, Virginia 22313-1450
www.uspto.gov

APPLICATION NO.	FILING DATE	FIRST NAMED INVENTOR	ATTORNEY DOCKET NO.	CONFIRMATION NO.
10/560,262	12/09/2005	Peter Zatloukal	120083-146181	3358

60172 7590 08/17/2009
SCHWABE, WILLIAMSON & WYATT, P.C.
1420 FIFTH, SUITE 3010
SEATTLE, WA 98101

EXAMINER
KOYAMA, KUMIKO C

ART UNIT	PAPER NUMBER
2887	

MAIL DATE	DELIVERY MODE
08/17/2009	PAPER

Please find below and/or attached an Office communication concerning this application or proceeding.

The time period for reply, if any, is set in the attached communication.

PTOL-90A (Rev. 04/07)

Office Action Summary	Application No.	Applicant(s)	
	10/560,262	ZATLOUKAL ET AL.	
	Examiner	Art Unit	
	KUMIKO C. KOYAMA	2887	

-- The MAILING DATE of this communication appears on the cover sheet with the correspondence address --

Period for Reply

A SHORTENED STATUTORY PERIOD FOR REPLY IS SET TO EXPIRE 3 MONTH(S) OR THIRTY (30) DAYS, WHICHEVER IS LONGER, FROM THE MAILING DATE OF THIS COMMUNICATION.

- Extensions of time may be available under the provisions of 37 CFR 1.136(a). In no event, however, may a reply be timely filed after SIX (6) MONTHS from the mailing date of this communication.
- If NO period for reply is specified above, the maximum statutory period will apply and will expire SIX (6) MONTHS from the mailing date of this communication.
- Failure to reply within the set or extended period for reply will, by statute, cause the application to become ABANDONED (35 U.S.C. § 133). Any reply received by the Office later than three months after the mailing date of this communication, even if timely filed, may reduce any earned patent term adjustment. See 37 CFR 1.704(b).

Status

1)☒ Responsive to communication(s) filed on 28 May 2009.

2a)☒ This action is **FINAL**. 2b)☐ This action is non-final.

3)☐ Since this application is in condition for allowance except for formal matters, prosecution as to the merits is closed in accordance with the practice under *Ex parte Quayle*, 1935 C.D. 11, 453 O.G. 213.

Disposition of Claims

4)☒ Claim(s) 1-40 is/are pending in the application.

4a) Of the above claim(s) _____ is/are withdrawn from consideration.

5)☐ Claim(s) _____ is/are allowed.

6)☒ Claim(s) 1-40 is/are rejected.

7)☐ Claim(s) _____ is/are objected to.

8)☐ Claim(s) _____ are subject to restriction and/or election requirement.

Application Papers

9)☐ The specification is objected to by the Examiner.

10)☒ The drawing(s) filed on 09 December 2005 is/are: a)☒ accepted or b)☐ objected to by the Examiner.

Applicant may not request that any objection to the drawing(s) be held in abeyance. See 37 CFR 1.85(a).

Replacement drawing sheet(s) including the correction is required if the drawing(s) is objected to. See 37 CFR 1.121(d).

11)☐ The oath or declaration is objected to by the Examiner. Note the attached Office Action or form PTO-152.

Priority under 35 U.S.C. § 119

12)☐ Acknowledgment is made of a claim for foreign priority under 35 U.S.C. § 119(a)-(d) or (f).

a)☐ All b)☐ Some * c)☐ None of:

1.☐ Certified copies of the priority documents have been received.

2.☐ Certified copies of the priority documents have been received in Application No. _____.

3.☐ Copies of the certified copies of the priority documents have been received in this National Stage application from the International Bureau (PCT Rule 17.2(a)).

* See the attached detailed Office action for a list of the certified copies not received.

Attachment(s)

1) ☐ Notice of References Cited (PTO-892)

2) ☐ Notice of Draftsperson's Patent Drawing Review (PTO-948)

3) ☐ Information Disclosure Statement(s) (PTO/SB/08) Paper No(s)/Mail Date _____.

4) ☐ Interview Summary (PTO-413) Paper No(s)/Mail Date. _____ .

5) ☐ Notice of Informal Patent Application

6) ☐ Other: _____.

DETAILED ACTION

Amendment received on May 28, 2009 has been acknowledged.

Claim Rejections - 35 USC § 102

1. The following is a quotation of the appropriate paragraphs of 35 U.S.C. 102 that form the basis for the rejections under this section made in this Office action:

> A person shall be entitled to a patent unless –
>
> (e) the invention was described in (1) an application for patent, published under section 122(b), by another filed in the United States before the invention by the applicant for patent or (2) a patent granted on an application for patent by another filed in the United States before the invention by the applicant for patent, except that an international application filed under the treaty defined in section 351(a) shall have the effects for purposes of this subsection of an application filed in the United States only if the international application designated the United States and was published under Article 21(2) of such treaty in the English language.

2. Claims 1-40 are rejected under 35 U.S.C. 102(e) as being anticipated by Zalewski et al (US 6,771,981).

Re Claims 1, 2, 6-11, 13, 14, 18, 19, 21, 26-31, 33, 34, 38 and 39: Zalewski discloses a mobile station 4 having a radio frequency component 18 that is a known component of mobile phones, which is used to transmit and receive calls and messages using radio frequencies in a radio communication network, such a GSM network (col 6, lines 65-col 7, line3). A cover 100 is coupled to the mobile staion 4 (col 7,m lines 58-62). Such disclosure of a radio frequency component 18 teaches a component of a mobile communication device to output a first data, and the component being also equipped to facilitate a user in communicating with a user of another communication device, with the communication being facilitated at least in part over a wireless network. Zalewski discloses that a user may use mobile station 104 to send request for room SMS or the like to a central reservation site to reserve a hotel room. Central reservation site may

send return SMS or the like comprising with room number, ID code, directions and other information (col 16, lines 35-42). Such disclosure teaches facilitating a user in providing an instruction to a component of a mobile communication device to output a first data. User may then proceed directly to room bypassing desk clerk. User then may place mobile station close to door lock which comprises an interrogator. Lock interrogates cover 100 and the cover responds with code received from central reservation site. Thus door is unlocked (col 16, lines 42-47). Such disclosure teaches the output emulating an output of the first data by an active RFID transponder, and in response to the providing an instruction, outputting the first data in the form of a radio frequency signal, the outputting emulating output of the first data by an active transponder. Since the cover 100 responds to the interrogation of the door lock, the cover 100 is monitoring for proximal presence of the RFID reader.

Re claims 3, 4, 15-17, 22-24 and 35-37: Zalewski discloses a hotel door key.

Re claims 5 and 25: Zalewski further discloses that by means of a mobile station equipped with a suitable application module the user can make payments in a shop using hi/her credit account (col 5, lines 35-40).

Re claims 12, 20, 32 and 40: Zalewski shows in Fig. 6 a wireless mobile phone 104.

Response to Arguments

3. Applicant's arguments with respect to claims 1-40 have been considered but are moot in view of the new ground(s) of rejection.

Applicant amended the claims with new limitation, such as “component of a," "monitoring," "the transmitter being operated," etc. Such new limitation necessitated new search

and consideration. Although the prior art has not been changed, the Examiner provided new interpretation to the claims to accommodate the newly added limitation to the claims. Therefore, this action is Final.

Conclusion

4. Applicant's amendment necessitated the new ground(s) of rejection presented in this Office action. Accordingly, **THIS ACTION IS MADE FINAL**. See MPEP § 706.07(a). Applicant is reminded of the extension of time policy as set forth in 37 CFR 1.136(a).

A shortened statutory period for reply to this final action is set to expire THREE MONTHS from the mailing date of this action. In the event a first reply is filed within TWO MONTHS of the mailing date of this final action and the advisory action is not mailed until after the end of the THREE-MONTH shortened statutory period, then the shortened statutory period will expire on the date the advisory action is mailed, and any extension fee pursuant to 37 CFR 1.136(a) will be calculated from the mailing date of the advisory action. In no event, however, will the statutory period for reply expire later than SIX MONTHS from the date of this final action.

Any inquiry concerning this communication or earlier communications from the examiner should be directed to KUMIKO C. KOYAMA whose telephone number is (571)272-2394. The examiner can normally be reached on Monday-Friday 8am-4:30pm.

If attempts to reach the examiner by telephone are unsuccessful, the examiner's supervisor, Steve Paik can be reached on 571-272-2404. The fax phone number for the organization where this application or proceeding is assigned is 571-273-8300.

Information regarding the status of an application may be obtained from the Patent Application Information Retrieval (PAIR) system. Status information for published applications may be obtained from either Private PAIR or Public PAIR. Status information for unpublished applications is available through Private PAIR only. For more information about the PAIR system, see http://pair-direct.uspto.gov. Should you have questions on access to the Private PAIR system, contact the Electronic Business Center (EBC) at 866-217-9197 (toll-free). If you would like assistance from a USPTO Customer Service Representative or access to the automated information system, call 800-786-9199 (IN USA OR CANADA) or 571-272-1000.

/Kumiko C. Koyama/
Primary Examiner, Art Unit 2887
August 15, 2009

Index of Claims	Application/Control No.	Applicant(s)/Patent Under Reexamination
	10560262	ZATLOUKAL ET AL.
	Examiner	**Art Unit**
	KUMIKO C KOYAMA	2887

✓	Rejected	-	Cancelled	N	Non-Elected	A	Appeal
=	Allowed	÷	Restricted	I	Interference	O	Objected

☐ Claims renumbered in the same order as presented by applicant ☐ CPA ☐ T.D. ☐ R.1.47

CLAIM		DATE								
Final	Original	02/28/2009	08/15/2009							
	1	✓	✓							
	2	✓	✓							
	3	✓	✓							
	4	✓	✓							
	5	✓	✓							
	6	✓	✓							
	7	✓	✓							
	8	✓	✓							
	9	✓	✓							
	10	✓	✓							
	11	✓	✓							
	12	✓	✓							
	13	✓	✓							
	14	✓	✓							
	15	✓	✓							
	16	✓	✓							
	17	✓	✓							
	18	✓	✓							
	19	✓	✓							
	20	✓	✓							
	21	✓	✓							
	22	✓	✓							
	23	✓	✓							
	24	✓	✓							
	25	✓	✓							
	26	✓	✓							
	27	✓	✓							
	28	✓	✓							
	29	✓	✓							
	30	✓	✓							
	31	✓	✓							
	32	✓	✓							
	33	✓	✓							
	34	✓	✓							
	35	✓	✓							
	36	✓	✓							

Index of Claims	Application/Control No.	Applicant(s)/Patent Under Reexamination
	10560262	ZATLOUKAL ET AL.
	Examiner	**Art Unit**
	KUMIKO C KOYAMA	2887

✓	Rejected	-	Cancelled	N	Non-Elected	A	Appeal
=	Allowed	÷	Restricted	I	Interference	O	Objected

☐ Claims renumbered in the same order as presented by applicant ☐ CPA ☐ T.D. ☐ R.1.47

CLAIM		DATE								
Final	Original	02/28/2009	08/15/2009							
	37	✓	✓							
	38	✓	✓							
	39	✓	✓							
	40	✓	✓							
	41	-	-							
	42	-	-							
	43	-	-							
	44	-	-							
	45	-	-							
	46	-	-							
	47	-	-							
	48	-	-							
	49	-	-							
	50	-	-							
	51	-	-							
	52	-	-							
	53	-	-							
	54	-	-							
	55	-	-							
	56	-	-							
	57	-	-							
	58	-	-							
	59	-	-							
	60	-	-							

Search Notes	Application/Control No.	Applicant(s)/Patent Under Reexamination
	10560262	ZATLOUKAL ET AL.
	Examiner	**Art Unit**
	KUMIKO C KOYAMA	2887

SEARCHED

Class	Subclass	Date	Examiner
235	375, 380, 492	02/28/2009	KCK
455	557	02/28/2009	KCK
340	505, 539.1, 539.11	02/28/2009	KCK
Updated	Search	08/15/2009	KCK

SEARCH NOTES

Search Notes	Date	Examiner
East Search	02/28/2009	KCK
Updated Search	08/15/2009	KCK

INTERFERENCE SEARCH

Class	Subclass	Date	Examiner

IN THE UNITED STATES PATENT AND TRADEMARK OFFICE

In re Patent Application of:	)	Examiner: Koyama, Kumiko C.
	)	
Zatloukal et al.	)	Art Unit: 2887
	)	
Application No.: 10/560,262	)	Confirmation No.: 3358
	)	
Filed: December 9, 2005	)	
	)	
For: EMULATED RADIO FREQUENCY IDENTIFICATION	)	

MAIL STOP AMENDMENT
Commissioner for Patents
PO Box 1450
Alexandria, VA 22313-1450

AMENDMENT AND RESPONSE TO OFFICE ACTION

INTRODUCTORY COMMENTS

This communication is submitted in response to the Office Action (herein "Office Action") mailed March 4, 2009. Applicants respectfully request reconsideration of the captioned application in view of the amendments and remarks to follow.

Amendments to the Claims are reflected in the listing of claims beginning on page **2** of this paper.

Remarks/Arguments begin on page **8** of this paper.

Amendments to the Claims

This listing of claims will replace all prior versions, and listings, of claims in the application:

Listing of Claims

1. (Currently Amended) A method for providing a radio frequency identification (RFID) comprising:

facilitating a user in providing an instruction to a component of a mobile communication device to output a first data, said output~~in a form of a first radio frequency signal to~~ emulating an ~~emulate~~ output of the first data by an active RFID transponder, the ~~mobile communication device~~component being also equipped to facilitate a user in communicating with a user of another communication device, with the communication being facilitated at least in part over a wireless network; and

in response to said providing an instruction, outputting the first data in the form of a radio frequency signal, said outputting emulating output of the first data by an active RFID transponder~~ as instructed by the user~~.

2. (Currently Amended) The method of claim 1, wherein said ~~first data comprises a selected one of a security key and an identifier~~component is a transceiver.

3. (Currently Amended) The method of claim 2, wherein said first data comprises a selected one of a security key[[,]] and ~~said security key comprises a door key~~an identifier.

4. (Currently Amended) The method of claim 3, wherein said ~~door~~ security key comprises a selected one of a garage door key, an exterior door key, an interior door key, and a motor vehicle door key.

5. (Original) The method of claim 2, wherein said first data comprises an identifier, and said identifier comprises a selected one of a social security number, a driver's license number, an affinity program account number, and a credit card number.

6. (Original) The method of claim 1, wherein the method further comprises facilitating the user in selecting the first data from a plurality of data using the mobile communication device.

7. (Original) The method of claim 1, wherein the method further comprises facilitating provision of the first data to the mobile communication device.

8. (Currently Amended) The method of claim 7, wherein said facilitating of the provisioning of the data to the mobile communication device[[,]] ~~including~~ includes facilitating provision of at least a signaling attribute associated with the outputting of the data in the form of a radio frequency signal.

9. (Currently Amended) The method of claim 1, wherein the method further comprises:

~~detecting~~ monitoring for proximal presence of a RFID reader by the mobile communication device; and

on detection of a RFID reader by the mobile communication device, outputting a second data in a form of a second radio frequency signal, using the mobile communication device, emulating output of the second data by a passive RFID transponder.

10. (Currently Amended) The method of claim 9, wherein said ~~detecting~~ monitoring comprises sensing for a probing radio frequency signal of the RFID reader by the mobile communication device.

11. (Original) The method of claim 9, wherein said first and second data are the same data.

12. (Original) The method of claim 1, wherein the mobile communication device is a selected one of a wireless mobile phone and a personal digital assistant equipped with communication capability.

13. (Currently Amended) A method for providing a radio frequency identifier (RFID), comprising:

~~detecting~~ monitoring for proximal presence of a RFID reader by a mobile communication device, the mobile communication device being also equipped to facilitate a user in communicating with a user of another communication device, with the communication being facilitated at least in part over a wireless network; and

on detection of a RFID reader, outputting a data in a form of a radio frequency signal, using the mobile communication device, said outputting emulating outputting of the data by a passive RFID transponder.

14. (Currently Amended) The method of claim 13, wherein said ~~detecting~~ monitoring comprises sensing for a probing radio frequency signal of the RFID reader by the mobile communication device.

15. (Original) The method of claim 13, wherein said data comprises a security key.

16. (Original) The method of claim 15, wherein said security key comprises a door key.

17. (Original) The method of claim 16, wherein said door key comprises a selected one of a garage door key, an exterior door key, an interior door key, and a motor vehicle door key.

18. (Original) The method of claim 13, wherein the method further comprises facilitating provision of the data to the mobile communication device.

19. (Original) The method of claim 18, wherein said facilitating of the provisioning of the data to the mobile communication device, including facilitating provision of at least a signaling attribute associated with the outputting of the data in the form of a radio frequency signal.

20. (Original) The method of claim 13, wherein the mobile communication device is a selected of a wireless mobile phone and a personal digital assistant equipped with communication capability.

21. (Currently Amended) A mobile communication device comprising:

a transmitter to transmit a radio frequency signal;

a storage medium to store a first data and instructions to operate the transmitter, the transmitter being operated to selectively (a) output [[the]] a first data ~~in a form of~~as a radio frequency signal, in response to a user instruction, said output emulating output of the first data by an active radio frequency identifier (RFID) transponder, and (b) facilitate a user to communicate with another user of another communication device, with the communication being facilitated at least in part over a wireless network; and

a processor coupled to the transmitter and the storage to execute the instructions.

22. (Original) The device of claim 21, wherein said first data comprises a selected one of a security key and an identifier.

23. (Original) The device of claim 22, wherein said first data comprises a security key, and said security key comprises a door key.

24. (Original) The device of claim 23, wherein said door key comprises a selected one of a garage door key, an exterior door key, an interior door key, and a motor vehicle door key.

25. (Original) The device of claim 22, wherein said first data comprises an identifier, and said identifier comprises a selected one of a social security number, a driver's license number, an affinity program account number, and a credit card number.

26. (Original) The device of claim 21, wherein the instructions are further designed to facilitate the user in selecting the first data from a plurality of data, and instructing said output.

27. (Original) The device of claim 21, wherein the instructions are further designed to facilitate provision of the first data to the mobile communication device.

28. (Original) The device of claim 27, wherein the instructions are further designed to include with said facilitating, provisioning of at least a signaling attribute associated with the outputting of the first data in the form of a radio frequency signal.

29. (Currently Amended) The device of claim 21, wherein the instructions are further designed to

~~detect~~ monitor for proximal presence of a RFID reader; and

on detection of a RFID reader, output[[ting]] a second data in a form of a second radio frequency signal, emulating output of the second data by a passive RFID transponder.

30. (Original) The device of claim 29, wherein the instructions are further designed to sense for a probing radio frequency signal of the RFID reader.

31. (Original) The device of claim 29, wherein said first and second data are the same data.

32. (Currently Amended) The device of claim 21, wherein the mobile communication device is a selected one of a wireless mobile phone and a personal digital assistant equipped with communication capability.

33. (Currently Amended) A mobile communication device comprising:

a transmitter to transmit a radio frequency signal;

a storage medium to store a first data and instructions to operate the transmitter to selectively (a) ~~detect~~ monitor for proximal presence of a radio frequency identifier (RFID) reader, and on detection of a RFID reader, output a data in [[a]] the form of a radio frequency signal, said output emulating output of the data by a passive RFID transponder, and (b) facilitate a user to communicate with another user of another communication device, with the communication being facilitated at least in part over a wireless network; and

a processor coupled to the transmitter and the storage to execute the instructions.

34. (Original) The device of claim 33, wherein said instructions are further designed to sense for a probing radio frequency signal of the RFID reader.

35. (Original) The device of claim 33, wherein said data comprises a security key.

36. (Original) The device of claim 35, wherein said security key comprises a door key.

37. (Original) The device of claim 36, wherein said door key comprises a selected one of a garage door key, an exterior door key, an interior door key, and a motor vehicle door key.

38. (Original) The device of claim 33, wherein the instructions are further designed to facilitate provision of the data to the mobile communication device.

39. (Original) The device of claim 38, wherein the instructions are further designed to include with said facilitating, provisioning of at least a signaling attribute associated with the outputting of the data in the form of a radio frequency signal.

40. (Original) The device of claim 33, wherein the mobile communication device is a selected of a wireless mobile phone and a personal digital assistant equipped with communication capability.

41.-60. (Cancelled)

Remarks

Reconsideration of the application is respectfully requested.

Claims 1-40 were rejected. Claims 1-4, 8-10, 13, 14, 21, 29, 32 and 33 have been amended. Claims 41-60 were previously canceled. All amendments are fully supported by the disclosure and no new matter is added.

Claim Rejections under 35 U.S.C. § 102

Claims 1-40 were rejected under 35 U.S.C. § 102(e) as being anticipated by U.S. Patent No. 6,771,981 issued to Zalewski et al. (hereinafter 'Zalewski'). More specifically, the interrogation of a cover 100 by a door lock of a hotel room (col. 16, lines 36-45) was cited as teaching "facilitating a user in providing an instruction to a mobile communication device to output a first data in a form of a first radio frequency signal to emulate output of the first data by an active RFID transponder." The cover responding with code received from a central reservation site, unlocking the door (col. 16, lines 45-47) was cited as teaching "in response, outputting the first data in the form of a radio frequency signal, emulating output of the first data by an active RFID transponder as instructed by the user."

To anticipate a claim, the reference must teach every element of the claim. The elements must be arranged as required by the claim, but . . . identity of terminology is not required. In re Bond, 910 F.2d 831, 15 USPQ2d 1566 (Fed. Cir. 1990); see also MPEP 2131. While Applicants respectfully disagree with each of the rejections listed in the Office Action, Applicants have amended the pending independent claims to clarify that which is claimed.

As amended, claim 1 recites a method for providing a radio frequency identification (RFID) comprising:

> facilitating a user in providing an instruction to a component of a mobile communication device to output a first data, said output emulating an output of the first data by an active RFID transponder, the component being also equipped to facilitate a user in communicating with a user of another communication device, with the communication being facilitated at least in part over a wireless network; and

in response to said providing an instruction, outputting the first data in the form of a radio frequency signal, said outputting emulating output of the first data by an active RFID transponder.

Support for these amendments may be found at least on page 6, lines 15-25 and Figure 1.

Thus, claim 1 recites a method in which a mobile device component equipped to facilitate wireless communication with another user is instructed to output data that **emulates** (i.e. imitates or equals) output of the data by an active RFID transponder, and in response to the instruction, outputs the data as a radiofrequency signal, emulating output by an active RFID transponder. Claim 1 does not recite using a transponder – instead, claim 1 recites instructing a component of a mobile phone to *emulate* output by a transponder, and this component is also configured for use in communicating with another user.

In contrast, Zalewski teaches a mobile station 104 comprising both a mobile phone and a disposable/interchangeable cover 100 (col. 9, lines 1-5). The cover 100 includes an attached/embedded RFID **transponder** 110 (col. 8, lines 1-3, 13-15). An interrogator/reader sends an interrogation signal and the transponder replies by transmitting data codes encoded in the transponder (col. 8, lines 16-21). Electrical signal coupling occurs between phone and cover via contacts 180 (col. 8, line 8).

In the passages cited in the Office Action, a mobile station 104 sends a reservation request to a central reservation site, which replies by sending a code. The user places the mobile station 104 against the door lock, which includes an interrogator. The interrogator sends an interrogation signal to the cover 100, which responds with the code to unlock the door. See col. 16, lines 36-47. Presumably, the interrogation signal is sent to the transponder, to which the mobile device has provided the signal code to send back to the interrogator. This disclosure does not teach every element of claim 1 for the following reasons.

First, the cited passages of Zalewski cannot teach "facilitating a user in <u>providing an instruction to a component</u> of a mobile communication device <u>to output a first data, said output emulating an output of the first data by an active RFID transponder</u>, the <u>component</u> <u>being also equipped to facilitate a user in communicating</u> with a user of another communication device, with the communication being facilitated at least in part

over a wireless network." In the cited passages, the user does not provide an instruction to a component of a mobile communications device to output data; the user merely places the device in proximity to the lock. The output of a signal by the transponder is triggered by the interrogator; if any "instruction" is given to a "component," it is an instruction given to the transponder by the interrogator. And because there is no instruction given by the user, there can be no "facilitating" a user in providing such an instruction.

Nor does Zalewski teach a component configured to both "facilitate a user in communicating with another user…" and output a first data, as recited by claim 1. The transponder within the cover 100 of Zalewski outputs data, but it does not facilitate a user in communicating with a user of another mobile device. And while Zalewski teaches using a RFID transponder to output data, claim 1 recites an instruction to a component to output data "**emulating** an output of the first data by an active RFID transponder." Zalewski's RFID transponder is not a component that **emulates** an output by an active RFID transponder, being itself an RFID transponder. Thus, the cover/transponder of Zalewski neither emulates an output by an active RFID transponder nor facilitates a user in communicating with a user of another communication device over a wireless network.

Second, Zalewski cannot teach "in response to said providing an instruction, outputting the first data in the form of a radio frequency signal, said outputting emulating output of the first data by an active RFID transponder" for the same reasons explained above (i.e. no teaching of providing an instruction, transponder responds to interrogator rather than user instruction, transponder does not "emulate" output by an active RFID transponder).

For at least the above reasons, Applicants respectfully submit that claim 1 is patentable over Zalewski. Should this rejection be maintained as to these claims, Applicants respectfully request that the Examiner provide a clear explanation of Zalewski's teaching of this feature for the prosecution history record as required by MPEP 707.07(f).

Claims 2-12 depend directly or indirectly from claim 1, incorporating its recitations, and are thus patentable over Zalewski for at least the same reasons.

Claim 2 as amended is further patentable over Zalewski because it also recites that the component is a transceiver, which is not disclosed by Zalewski. Support for this

recitation is found at least on page 9, lines 1-5 and 20-25; page 11, lines 19-30; page 12, 1-20; and Figure 4. Claims 3-5 depend from claim 2, incorporating its recitations. Thus, claims 2-5 are also patentable over Zalewski for this additional reason.

Independent claims 13, 21 and 33 were rejected for the same reasons as claim 1. These claims incorporate substantially the same subject matter as claim 1 and are thus patentable over Zalewski for at least the same reasons.

Claims 14-20 depend from claim 13, incorporating its recitations. Claims 22-32 depend from claim 21, incorporating its recitations. Claims 34-40 depend from claim 33, incorporating its recitations. Therefore, claims 14-20, 22-32 and 34-40 are also allowable over Zalewski for at least the same reasons.

In addition, claims 9-11, 14-20, 29-31 and 33-40 are patentable over Zalewski because they recite or incorporate the recitation "monitoring for proximal presence of a RFID reader by a mobile communication device" or a substantially similar feature. Support for this recitation is found at least on page 8, lines 24-30, and in Figures 1 and 2. Applicants find no such disclosure in the specification or figures of Zalewski. Should this rejection be maintained as to these claims, Applicants respectfully request that the Examiner provide a clear explanation of Zalewski's teaching of this feature for the prosecution history record as required by MPEP 707.07(f).

For all of the above reasons, Applicants submit that all pending claims are patentable over Zalewski. Notice of allowance is respectfully requested.

CONCLUSION

All pending claims are in a condition for allowance. Accordingly, a Notice of Allowance is respectfully requested. If the Examiner has any questions concerning the present paper, the Examiner is kindly requested to contact the undersigned at (503) 222-9981. If any fees are due in connection with filing this paper, the Commissioner is authorized to charge the Deposit Account of Schwabe, Williamson & Wyatt, P.C., No. 50-0393.

Respectfully submitted,
SCHWABE, WILLIAMSON & WYATT, P.C.

Date: May 28, 2009 by: /Al AuYeung/
Al AuYeung
Reg. No.: 35,432

Schwabe, Williamson & Wyatt, P.C.
Pacwest Center, Suites 1600-1900
1211 SW Fifth Avenue
Portland, Oregon 97222
Telephone: 503-222-9981

Electronic Acknowledgement Receipt

EFS ID:	5410943
Application Number:	10560262
International Application Number:	
Confirmation Number:	3358
Title of Invention:	Emulated radio frequency identification
First Named Inventor/Applicant Name:	Peter Zatloukal
Customer Number:	60172
Filer:	Aloysius T.C. Auyeung/Allyson Dahmen
Filer Authorized By:	Aloysius T.C. Auyeung
Attorney Docket Number:	120083-146181
Receipt Date:	28-MAY-2009
Filing Date:	09-DEC-2005
Time Stamp:	19:40:22
Application Type:	U.S. National Stage under 35 USC 371

Payment information:

Submitted with Payment	no

File Listing:

Document Number	Document Description	File Name	File Size(Bytes)/ Message Digest	Multi Part /.zip	Pages (if appl.)
1		Varia_P064_Resp_OA.pdf	457564 72fc68155057b47c6a8c80566bcc344dd05e52d8	yes	12

	Multipart Description/PDF files in .zip description		
	Document Description	**Start**	**End**
	Amendment/Req. Reconsideration-After Non-Final Reject	1	1
	Claims	2	7
	Applicant Arguments/Remarks Made in an Amendment	8	12
Warnings:			
Information:			
	Total Files Size (in bytes):	457564	

This Acknowledgement Receipt evidences receipt on the noted date by the USPTO of the indicated documents, characterized by the applicant, and including page counts, where applicable. It serves as evidence of receipt similar to a Post Card, as described in MPEP 503.

<u>New Applications Under 35 U.S.C. 111</u>
If a new application is being filed and the application includes the necessary components for a filing date (see 37 CFR 1.53(b)-(d) and MPEP 506), a Filing Receipt (37 CFR 1.54) will be issued in due course and the date shown on this Acknowledgement Receipt will establish the filing date of the application.

<u>National Stage of an International Application under 35 U.S.C. 371</u>
If a timely submission to enter the national stage of an international application is compliant with the conditions of 35 U.S.C. 371 and other applicable requirements a Form PCT/DO/EO/903 indicating acceptance of the application as a national stage submission under 35 U.S.C. 371 will be issued in addition to the Filing Receipt, in due course.

<u>New International Application Filed with the USPTO as a Receiving Office</u>
If a new international application is being filed and the international application includes the necessary components for an international filing date (see PCT Article 11 and MPEP 1810), a Notification of the International Application Number and of the International Filing Date (Form PCT/RO/105) will be issued in due course, subject to prescriptions concerning national security, and the date shown on this Acknowledgement Receipt will establish the international filing date of the application.

PTO/SB/06 (07-06)
Approved for use through 1/31/2007. OMB 0651-0032
U.S. Patent and Trademark Office; U.S. DEPARTMENT OF COMMERCE
Under the Paperwork Reduction Act of 1995, no persons are required to respond to a collection of information unless it displays a valid OMB control number.

PATENT APPLICATION FEE DETERMINATION RECORD

Substitute for Form PTO-875

Application or Docket Number	Filing Date	☐ To be Mailed
10/560,262	12/09/2005	

APPLICATION AS FILED – PART I

FOR	(Column 1) NUMBER FILED	(Column 2) NUMBER EXTRA	SMALL ENTITY ☐ RATE ($)	SMALL ENTITY FEE ($)	OR	OTHER THAN SMALL ENTITY RATE ($)	OTHER THAN SMALL ENTITY FEE ($)
☒ BASIC FEE (37 CFR 1.16(a), (b), or (c))	N/A	N/A	N/A			N/A	300
☐ SEARCH FEE (37 CFR 1.16(k), (i), or (m))	N/A	N/A	N/A			N/A	
☐ EXAMINATION FEE (37 CFR 1.16(o), (p), or (q))	N/A	N/A	N/A			N/A	
TOTAL CLAIMS (37 CFR 1.16(i))	minus 20 =	*	X $ =		OR	X $ =	
INDEPENDENT CLAIMS (37 CFR 1.16(h))	minus 3 =	*	X $ =			X $ =	
☐ APPLICATION SIZE FEE (37 CFR 1.16(s))	If the specification and drawings exceed 100 sheets of paper, the application size fee due is $250 ($125 for small entity) for each additional 50 sheets or fraction thereof. See 35 U.S.C. 41(a)(1)(G) and 37 CFR 1.16(s).						
☐ MULTIPLE DEPENDENT CLAIM PRESENT (37 CFR 1.16(j))							
* If the difference in column 1 is less than zero, enter "0" in column 2.			TOTAL			TOTAL	300

APPLICATION AS AMENDED – PART II

AMENDMENT 05/28/2009	(Column 1) CLAIMS REMAINING AFTER AMENDMENT		(Column 2) HIGHEST NUMBER PREVIOUSLY PAID FOR	(Column 3) PRESENT EXTRA	SMALL ENTITY RATE ($)	SMALL ENTITY ADDITIONAL FEE ($)	OR	OTHER THAN SMALL ENTITY RATE ($)	OTHER THAN SMALL ENTITY ADDITIONAL FEE ($)
Total (37 CFR 1.16(i))	* 40	Minus	** 40	= 0	X $ =		OR	X $52=	0
Independent (37 CFR 1.16(h))	* 4	Minus	***4	= 0	X $ =		OR	X $220=	0
☐ Application Size Fee (37 CFR 1.16(s))									
☐ FIRST PRESENTATION OF MULTIPLE DEPENDENT CLAIM (37 CFR 1.16(j))							OR		
					TOTAL ADD'L FEE		OR	TOTAL ADD'L FEE	0

AMENDMENT	(Column 1) CLAIMS REMAINING AFTER AMENDMENT		(Column 2) HIGHEST NUMBER PREVIOUSLY PAID FOR	(Column 3) PRESENT EXTRA	RATE ($)	ADDITIONAL FEE ($)		RATE ($)	ADDITIONAL FEE ($)
Total (37 CFR 1.16(i))	*	Minus	**	=	X $ =		OR	X $ =	
Independent (37 CFR 1.16(h))	*	Minus	***	=	X $ =		OR	X $ =	
☐ Application Size Fee (37 CFR 1.16(s))									
☐ FIRST PRESENTATION OF MULTIPLE DEPENDENT CLAIM (37 CFR 1.16(j))							OR		
					TOTAL ADD'L FEE		OR	TOTAL ADD'L FEE	

* If the entry in column 1 is less than the entry in column 2, write "0" in column 3.
** If the "Highest Number Previously Paid For" IN THIS SPACE is less than 20, enter "20".
*** If the "Highest Number Previously Paid For" IN THIS SPACE is less than 3, enter "3".
The "Highest Number Previously Paid For" (Total or Independent) is the highest number found in the appropriate box in column 1.

Legal Instrument Examiner:
/GLORIA TRAMMELL/

This collection of information is required by 37 CFR 1.16. The information is required to obtain or retain a benefit by the public which is to file (and by the USPTO to process) an application. Confidentiality is governed by 35 U.S.C. 122 and 37 CFR 1.14. This collection is estimated to take 12 minutes to complete, including gathering, preparing, and submitting the completed application form to the USPTO. Time will vary depending upon the individual case. Any comments on the amount of time you require to complete this form and/or suggestions for reducing this burden, should be sent to the Chief Information Officer, U.S. Patent and Trademark Office, U.S. Department of Commerce, P.O. Box 1450, Alexandria, VA 22313-1450. DO NOT SEND FEES OR COMPLETED FORMS TO THIS ADDRESS. **SEND TO: Commissioner for Patents, P.O. Box 1450, Alexandria, VA 22313-1450.**
If you need assistance in completing the form, call 1-800-PTO-9199 and select option 2.

UNITED STATES PATENT AND TRADEMARK OFFICE

UNITED STATES DEPARTMENT OF COMMERCE
United States Patent and Trademark Office
Address: COMMISSIONER FOR PATENTS
P.O. Box 1450
Alexandria, Virginia 22313-1450
www.uspto.gov

APPLICATION NO.	FILING DATE	FIRST NAMED INVENTOR	ATTORNEY DOCKET NO.	CONFIRMATION NO.
10/560,262	12/09/2005	Peter Zatloukal	109909-146181	3358

60172 7590 03/04/2009
SCHWABE, WILLIAMSON & WYATT, P.C.
1420 FIFTH, SUITE 3010
SEATTLE, WA 98101

EXAMINER
KOYAMA, KUMIKO C

ART UNIT	PAPER NUMBER
2887	

MAIL DATE	DELIVERY MODE
03/04/2009	PAPER

Please find below and/or attached an Office communication concerning this application or proceeding.

The time period for reply, if any, is set in the attached communication.

PTOL-90A (Rev. 04/07)

Office Action Summary	Application No.	Applicant(s)	
	10/560,262	ZATLOUKAL ET AL.	
	Examiner	Art Unit	
	KUMIKO C. KOYAMA	2887	

-- The MAILING DATE of this communication appears on the cover sheet with the correspondence address --

Period for Reply

A SHORTENED STATUTORY PERIOD FOR REPLY IS SET TO EXPIRE 3 MONTH(S) OR THIRTY (30) DAYS, WHICHEVER IS LONGER, FROM THE MAILING DATE OF THIS COMMUNICATION.

- Extensions of time may be available under the provisions of 37 CFR 1.136(a). In no event, however, may a reply be timely filed after SIX (6) MONTHS from the mailing date of this communication.
- If NO period for reply is specified above, the maximum statutory period will apply and will expire SIX (6) MONTHS from the mailing date of this communication.
- Failure to reply within the set or extended period for reply will, by statute, cause the application to become ABANDONED (35 U.S.C. § 133). Any reply received by the Office later than three months after the mailing date of this communication, even if timely filed, may reduce any earned patent term adjustment. See 37 CFR 1.704(b).

Status

1)☒ Responsive to communication(s) filed on 09 December 2005.

2a)☐ This action is **FINAL**. 2b)☒ This action is non-final.

3)☐ Since this application is in condition for allowance except for formal matters, prosecution as to the merits is closed in accordance with the practice under *Ex parte Quayle*, 1935 C.D. 11, 453 O.G. 213.

Disposition of Claims

4)☒ Claim(s) 1-40 is/are pending in the application.

4a) Of the above claim(s) _____ is/are withdrawn from consideration.

5)☐ Claim(s) _____ is/are allowed.

6)☒ Claim(s) 1-40 is/are rejected.

7)☐ Claim(s) _____ is/are objected to.

8)☐ Claim(s) _____ are subject to restriction and/or election requirement.

Application Papers

9)☐ The specification is objected to by the Examiner.

10)☒ The drawing(s) filed on 09 December 2005 is/are: a)☒ accepted or b)☐ objected to by the Examiner.

Applicant may not request that any objection to the drawing(s) be held in abeyance. See 37 CFR 1.85(a).

Replacement drawing sheet(s) including the correction is required if the drawing(s) is objected to. See 37 CFR 1.121(d).

11)☐ The oath or declaration is objected to by the Examiner. Note the attached Office Action or form PTO-152.

Priority under 35 U.S.C. § 119

12)☐ Acknowledgment is made of a claim for foreign priority under 35 U.S.C. § 119(a)-(d) or (f).

a)☐ All b)☐ Some * c)☐ None of:

1.☐ Certified copies of the priority documents have been received.

2.☐ Certified copies of the priority documents have been received in Application No. _____.

3.☐ Copies of the certified copies of the priority documents have been received in this National Stage application from the International Bureau (PCT Rule 17.2(a)).

* See the attached detailed Office action for a list of the certified copies not received.

Attachment(s)

1) ☒ Notice of References Cited (PTO-892)

2) ☐ Notice of Draftsperson's Patent Drawing Review (PTO-948)

3) ☒ Information Disclosure Statement(s) (PTO/SB/08) Paper No(s)/Mail Date 0206.

4) ☐ Interview Summary (PTO-413) Paper No(s)/Mail Date. _____ .

5) ☐ Notice of Informal Patent Application

6) ☐ Other: _____.

DETAILED ACTION

Preliminary Amendment received on December 09, 2005 has been acknowledged.

Claim Rejections - 35 USC § 102

1. The following is a quotation of the appropriate paragraphs of 35 U.S.C. 102 that form the basis for the rejections under this section made in this Office action:

> A person shall be entitled to a patent unless –
>
> (e) the invention was described in (1) an application for patent, published under section 122(b), by another filed in the United States before the invention by the applicant for patent or (2) a patent granted on an application for patent by another filed in the United States before the invention by the applicant for patent, except that an international application filed under the treaty defined in section 351(a) shall have the effects for purposes of this subsection of an application filed in the United States only if the international application designated the United States and was published under Article 21(2) of such treaty in the English language.

2. Claims 1-40 are rejected under 35 U.S.C. 102(e) as being anticipated by Zalewski et al (US 6,771,981).

Re claims 1-4, 6-11, 13-19, 21-24, 26-31 and 33-39: Zalewski discloses that a user may use mobile station 104 to send request for room SMS or the like to a central reservation site to reserve a hotel room. Central reservation site may send return SMS or the like comprising with room number, ID code, directions and other information. User may then proceed directly to room bypassing desk clerk. User then may place mobile station close to dook lock which comprises an interrogator. Lock interrogates cover 100 col 16, lines 36-45). Such disclosure teaches facilitating a user in providing an instruction to a mobile communication device to output a first data in a form of a fist radio frequency signal to emulate output of the first data by an active RFID transponder. Zalewski discloses that the cover responds with code received from central reservation site. Thus door is unlocked (col 16, lines 45-47). Such disclosure teaches in response,

outputting the first data in the form of a radio frequency signal, emulating output of the first data by an active RFID transponder as instructed by the user. Fig. 10 shows the communication between two mobile stations in accordance with the invention (col 6, lines 24-25). Such figure and disclosure teaches that the mobile communication device being equipped to facilitate a user in communicating with a user of another communication device, with the communication being facilitated at least in part over a wireless network.

Re claims 5 and 25: Zalewski further discloses that by means of a mobile station equipped with a suitable application module the user can make payments in a shop using hi/her credit account (col 5, lines 35-40).

Re claims 12, 20, 32 and 40: Zalewski shows in Fig. 6 a wireless mobile phone 104.

Conclusion

3. The prior art made of record and not relied upon is considered pertinent to applicant's disclosure.

Vanska et al, U.S. Patent Application Publication No. 2004/0093274 A1, discloses method and apparatus for making daily shopping easier.

Beckmann et al, U.S. Patent No. 5,957,99, discloses radio navigation emulating GPS system.

Any inquiry concerning this communication or earlier communications from the examiner should be directed to KUMIKO C. KOYAMA whose telephone number is (571)272-2394. The examiner can normally be reached on Monday-Friday 8am-4:30pm.

If attempts to reach the examiner by telephone are unsuccessful, the examiner's supervisor, Steve Paik can be reached on 571-272-2404. The fax phone number for the organization where this application or proceeding is assigned is 571-273-8300.

Information regarding the status of an application may be obtained from the Patent Application Information Retrieval (PAIR) system. Status information for published applications may be obtained from either Private PAIR or Public PAIR. Status information for unpublished applications is available through Private PAIR only. For more information about the PAIR system, see http://pair-direct.uspto.gov. Should you have questions on access to the Private PAIR system, contact the Electronic Business Center (EBC) at 866-217-9197 (toll-free). If you would like assistance from a USPTO Customer Service Representative or access to the automated information system, call 800-786-9199 (IN USA OR CANADA) or 571-272-1000.

/Kumiko C. Koyama/
Primary Examiner, Art Unit 2887
March 02, 2009

Notice of References Cited	Application/Control No. 10/560,262	Applicant(s)/Patent Under Reexamination ZATLOUKAL ET AL.	
	Examiner KUMIKO C. KOYAMA	Art Unit 2887	Page 1 of 1

U.S. PATENT DOCUMENTS

*		Document Number Country Code-Number-Kind Code	Date MM-YYYY	Name	Classification
*	A	US-6,771,981	08-2004	Zalewski et al.	455/557
*	B	US-2004/0093274	05-2004	Vanska et al.	705/026
*	C	US-5,957,995	09-1999	Beckmann et al.	701/213
	D	US-			
	E	US-			
	F	US-			
	G	US-			
	H	US-			
	I	US-			
	J	US-			
	K	US-			
	L	US-			
	M	US-			

FOREIGN PATENT DOCUMENTS

*		Document Number Country Code-Number-Kind Code	Date MM-YYYY	Country	Name	Classification
	N					
	O					
	P					
	Q					
	R					
	S					
	T					

NON-PATENT DOCUMENTS

*		Include as applicable: Author, Title Date, Publisher, Edition or Volume, Pertinent Pages)
	U	
	V	
	W	
	X	

*A copy of this reference is not being furnished with this Office action. (See MPEP § 707.05(a).)
Dates in MM-YYYY format are publication dates. Classifications may be US or foreign.

Index of Claims	Application/Control No.	Applicant(s)/Patent Under Reexamination
	10560262	ZATLOUKAL ET AL.
	Examiner	**Art Unit**
	KUMIKO C KOYAMA	2887

✓	Rejected	-	Cancelled	N	Non-Elected	A	Appeal
=	Allowed	÷	Restricted	I	Interference	O	Objected

☐ Claims renumbered in the same order as presented by applicant ☐ CPA ☐ T.D. ☐ R.1.47

CLAIM		DATE								
Final	Original	02/28/2009								
	1	✓								
	2	✓								
	3	✓								
	4	✓								
	5	✓								
	6	✓								
	7	✓								
	8	✓								
	9	✓								
	10	✓								
	11	✓								
	12	✓								
	13	✓								
	14	✓								
	15	✓								
	16	✓								
	17	✓								
	18	✓								
	19	✓								
	20	✓								
	21	✓								
	22	✓								
	23	✓								
	24	✓								
	25	✓								
	26	✓								
	27	✓								
	28	✓								
	29	✓								
	30	✓								
	31	✓								
	32	✓								
	33	✓								
	34	✓								
	35	✓								
	36	✓								

Index of Claims	Application/Control No.	Applicant(s)/Patent Under Reexamination
	10560262	ZATLOUKAL ET AL.
	Examiner	**Art Unit**
	KUMIKO C KOYAMA	2887

✓	Rejected	-	Cancelled	N	Non-Elected	A	Appeal
=	Allowed	÷	Restricted	I	Interference	O	Objected

☐ Claims renumbered in the same order as presented by applicant ☐ CPA ☐ T.D. ☐ R.1.47

CLAIM		DATE								
Final	Original	02/28/2009								
	37	✓								
	38	✓								
	39	✓								
	40	✓								
	41	-								
	42	-								
	43	-								
	44	-								
	45	-								
	46	-								
	47	-								
	48	-								
	49	-								
	50	-								
	51	-								
	52	-								
	53	-								
	54	-								
	55	-								
	56	-								
	57	-								
	58	-								
	59	-								
	60	-								

Search Notes	Application/Control No.	Applicant(s)/Patent Under Reexamination
	10560262	ZATLOUKAL ET AL.
	Examiner	**Art Unit**
	KUMIKO C KOYAMA	2887

SEARCHED

Class	Subclass	Date	Examiner
235	375, 380, 492	02/28/2009	KCK
455	557	02/28/2009	KCK
340	505, 539.1, 539.11	02/28/2009	KCK

SEARCH NOTES

Search Notes	Date	Examiner
East Search	02/28/2009	KCK

INTERFERENCE SEARCH

Class	Subclass	Date	Examiner

UNITED STATES PATENT AND TRADEMARK OFFICE

UNITED STATES DEPARTMENT OF COMMERCE
United States Patent and Trademark Office
Address: COMMISSIONER FOR PATENTS
P.O. Box 1450
Alexandria, Virginia 22313-1450
www.uspto.gov

BIB DATA SHEET

CONFIRMATION NO. 3358

SERIAL NUMBER	FILING or 371(c) DATE	CLASS	GROUP ART UNIT	ATTORNEY DOCKET NO.
10/560,262	12/09/2005 RULE	235	2887	109909-146181

APPLICANTS

Peter Zatloukal, Kirkland, WA;
G. Eric Engstrom, Kirkland, WA;
Cindy M. Smith, Kirkland, WA;

**** CONTINUING DATA ***************************

This application is a 371 of PCT/US04/18397 06/10/2004
which claims benefit of 60/478,245 06/13/2003

**** FOREIGN APPLICATIONS ***************************

**** IF REQUIRED, FOREIGN FILING LICENSE GRANTED ****

02/28/2006

Foreign Priority claimed	❑ Yes ☑ No		STATE OR COUNTRY	SHEETS DRAWINGS	TOTAL CLAIMS	INDEPENDENT CLAIMS
35 USC 119(a-d) conditions met	❑ Yes ☑ No	❑ Met after Allowance				
Verified and Acknowledged	/KUMIKO C KOYAMA/ Examiner's Signature	Initials	WA	12	40	4

ADDRESS

SCHWABE, WILLIAMSON & WYATT, P.C.
1420 FIFTH, SUITE 3010
SEATTLE, WA 98101
UNITED STATES

TITLE

Emulated radio frequency identification

FILING FEE RECEIVED		
1800	FEES: Authority has been given in Paper No._____ to charge/credit DEPOSIT ACCOUNT No._____ for following:	❑ All Fees ❑ 1.16 Fees (Filing) ❑ 1.17 Fees (Processing Ext. of time) ❑ 1.18 Fees (Issue) ❑ Other _____ ❑ Credit

BIB (Rev. 05/07).

EAST Search History

Ref #	Hits	Search Query	DBs	Default Operator	Plurals	Time Stamp
L1	1	"6771981".pn. and (credit adj card)	US-PGPUB; USPAT; USOCR; EPO; JPO; DERWENT; IBM_TDB	OR	ON	2009/03/02 00:45
L2	2	"6771981".pn. and phone	US-PGPUB; USPAT; USOCR; EPO; JPO; DERWENT; IBM_TDB	OR	ON	2009/03/02 00:50
S1	18	(emulat$4 with rfid with transponder)	US-PGPUB; USPAT; USOCR; EPO; JPO; DERWENT; IBM_TDB	OR	ON	2009/02/28 19:34
S2	26	(emulat$4 with transponder) and rfid	US-PGPUB; USPAT; USOCR; EPO; JPO; DERWENT; IBM_TDB	OR	ON	2009/02/28 19:36
S3	307	(user with select$4) same (transmit$4 with rf with selected)	US-PGPUB; USPAT; USOCR; EPO; JPO; DERWENT; IBM_TDB	OR	ON	2009/02/28 19:38
S4	2	S3 and (detect$4 with rfid with reader)	US-PGPUB; USPAT; USOCR; EPO; JPO; DERWENT; IBM_TDB	OR	ON	2009/02/28 19:39
S5	173	(user with select$4) same (transmit$4 with rf with signal with selected)	US-PGPUB; USPAT; USOCR; EPO; JPO; DERWENT; IBM_TDB	OR	ON	2009/02/28 19:39
S6	26	rfid and (emulat$4 with transponder)	US-PGPUB; USPAT; USOCR; EPO; JPO; DERWENT; IBM_TDB	OR	ON	2009/02/28 19:43

S7	116	(emulat$4 with rfid)	US-PGPUB; USPAT; USOCR; EPO; JPO; DERWENT; IBM_TDB	OR	ON	2009/02/28 19:45
S8	80	((mobile or portable) with (terminal or device) with transmit$4 with selected with rf)	US-PGPUB; USPAT; USOCR; EPO; JPO; DERWENT; IBM_TDB	OR	ON	2009/02/28 19:47
S9	195	(select$4 with identification) and (transmit$4 with identification with rfid with reader)	US-PGPUB; USPAT; USOCR; EPO; JPO; DERWENT; IBM_TDB	OR	ON	2009/02/28 19:49
S10	46	(select$4 with identification) same (transmit$4 with identification with rfid with reader)	US-PGPUB; USPAT; USOCR; EPO; JPO; DERWENT; IBM_TDB	OR	ON	2009/02/28 19:49
S11	95592	@ad<"20030613" and (select$4 with (rfid or identification or id))	US-PGPUB; USPAT; USOCR; EPO; JPO; DERWENT; IBM_TDB	OR	ON	2009/02/28 19:51
S12	111695	@ad<"20030613" and (select$4 with (rfid or identification or id or identifier))	US-PGPUB; USPAT; USOCR; EPO; JPO; DERWENT; IBM_TDB	OR	ON	2009/02/28 19:51
S13	5655	@ad<"20030613" and ((select$4 with (rfid or identification or id or identifier)) same (transmit $4 with selected))	US-PGPUB; USPAT; USOCR; EPO; JPO; DERWENT; IBM_TDB	OR	ON	2009/02/28 19:52
S14	8	@ad<"20030613" and ((select$4 with (rfid or identification or id or identifier)) same (transmit $4 with selected)) and rfi	US-PGPUB; USPAT; USOCR; EPO; JPO; DERWENT; IBM_TDB	OR	ON	2009/02/28 19:52

S15	138	@ad<"20030613" and ((select$4 with (rfid or identification or id or identifier)) same (transmit $4 with selected)) and rfid	US-PGPUB; USPAT; USOCR; EPO; JPO; DERWENT; IBM_TDB	OR	ON	2009/02/28 19:52
S16	278	(rfid with reader with (detect$4 or sens$4) with (portable or mobile))	US-PGPUB; USPAT; USOCR; EPO; JPO; DERWENT; IBM_TDB	OR	ON	2009/02/28 19:56
S17	23	S16 and @ad<"20030613"	US-PGPUB; USPAT; USOCR; EPO; JPO; DERWENT; IBM_TDB	OR	ON	2009/02/28 19:56
S18	78	(emulat$4 with rfid with (tag or label))	US-PGPUB; USPAT; USOCR; EPO; JPO; DERWENT; IBM_TDB	OR	ON	2009/02/28 20:00
S19	0	S18 and @ad<"20030613"	US-PGPUB; USPAT; USOCR; EPO; JPO; DERWENT; IBM_TDB	OR	ON	2009/02/28 20:00
S20	0	@ad<"20030613" and (emulat$4 with rfid)	US-PGPUB; USPAT; USOCR; EPO; JPO; DERWENT; IBM_TDB	OR	ON	2009/02/28 20:00
S21	6	@ad<"20030613" and (emulat$4 with radio with frequency with (identification or identifier))	US-PGPUB; USPAT; USOCR; EPO; JPO; DERWENT; IBM_TDB	OR	ON	2009/02/28 20:01
S22	3043	@ad<"20030613" and (transmit$4 with (id or identification or identifier) with (rf or (radio adj frequency)))	US-PGPUB; USPAT; USOCR; EPO; JPO; DERWENT; IBM_TDB	OR	ON	2009/02/28 20:04

S23	3043	@ad<"20030613" and (transmit$4 with (id or identification or identifier) with (rf or (radio adj frequency)))	US-PGPUB; USPAT; USOCR; EPO; JPO; DERWENT; IBM_TDB	OR	ON	2009/02/28 20:05
S24	4	@ad<"20030613" and (translat$4 with user with (id or identification or identifier) with (rf or (radio adj frequency)))	US-PGPUB; USPAT; USOCR; EPO; JPO; DERWENT; IBM_TDB	OR	ON	2009/02/28 20:05
S25	278	@ad<"20030613" and (transmit$4 with (mobile or portable) with (id or identification or identifier) with (rf or (radio adj frequency)))	US-PGPUB; USPAT; USOCR; EPO; JPO; DERWENT; IBM_TDB	OR	ON	2009/02/28 20:06
S26	2	@ad<"20030613" and ((transmit$4 with (mobile or portable) with (id or identification or identifier) with (rf or (radio adj frequency))) near30 (rfid with reader))	US-PGPUB; USPAT; USOCR; EPO; JPO; DERWENT; IBM_TDB	OR	ON	2009/02/28 20:06
S27	6	@ad<"20030613" and (translat$4 with user with input with (rf or (radio adj frequency)))	US-PGPUB; USPAT; USOCR; EPO; JPO; DERWENT; IBM_TDB	OR	ON	2009/02/28 20:07
S28	294	@ad<"20030613" and ((rfid with (reader or detector or sensor)) with (mobile or portable))	US-PGPUB; USPAT; USOCR; EPO; JPO; DERWENT; IBM_TDB	OR	ON	2009/02/28 20:09
S29	35	@ad<"20030613" and ((rfid with (reader or detector or sensor)) with receiv$4 with (mobile or portable))	US-PGPUB; USPAT; USOCR; EPO; JPO; DERWENT; IBM_TDB	OR	ON	2009/02/28 20:09

3/2/2009 12:56:56 AM
C:\Documents and Settings\kkoyama\My Documents\EAST\Workspaces\10560262.wsp

OIPE
FEB 2 3 2006
PATENT & TRADEMARK OFFICE

PTO/SB/08A (08-03)
Approved for use through 07/31/2006. OMB 0651-0031
U.S. Patent and Trademark Office; U.S. DEPARTMENT OF COMMERCE
Under the Paperwork Reduction Act of 1995, no persons are required to respond to a collection of information unless it contains a valid OMB control number.

Substitute for form 1449/PTO

INFORMATION DISCLOSURE STATEMENT BY APPLICANT

(Use as many sheets as necessary)

Sheet 1 of 1

Complete if Known	
Application Number	10/560,262
Filing Date	December 9, 2005
First Named Inventor	Engstrom
Art Unit	~~To be assigned~~ 2887
Examiner Name	~~To be assigned~~ Koyama, K
Attorney Docket Number	109909-146181

U. S. PATENT DOCUMENTS

Examiner Initials*	Cite No.[1]	Document Number Number-Kind Code[2] (if known)	Publication Date MM-DD-YYYY	Name of Patentee or Applicant of Cited Document	Pages, Columns, Lines, Where Relevant Passages or Relevant Figures Appear
/KK/	1	US- 5,473,318 A	12-05-1995	Martel	
/KK/	2	US- 6,421,347 B1	07-16-2002	Borgstahl et al.	
/KK/	3	US- 6,476,708 B1	11-05-2002	Johnson	
		US-			
		US-			
		US-			
		US-			
		US-			
		US-			
		US-			
		US-			
		US-			
		US-			
		US-			
		US-			
		US-			
		US-			
		US-			
		US-			

FOREIGN PATENT DOCUMENTS

Examiner Initials*	Cite No.[1]	Foreign Patent Document Country Code[3]-Number[4]-Kind Code[5] (if known)	Publication Date MM-DD-YYYY	Name of Patentee or Applicant of Cited Document	Pages, Columns, Lines, Where Relevant Passages Or Relevant Figures Appear	T[6]

Examiner Signature	/Kumiko Koyama/	Date Considered	02/28/2009

*EXAMINER: Initial if reference considered, whether or not citation is in conformance with MPEP 609. Draw line through citation if not in conformance and not considered. Include copy of this form with next communication to applicant. [1] Applicant's unique citation designation number (optional). [2] See Kinds Codes of USPTO Patent Documents at www.uspto.gov or MPEP 901.04. [3] Enter Office that issued the document, by the two-letter code (WIPO Standard ST.3). [4] For Japanese patent documents, the indication of the year of the reign of the Emperor must precede the serial number of the patent document. [5] Kind of document by the appropriate symbols as indicated on the document under WIPO Standard ST.16 if possible. [6] Applicant is to place a check mark here if English language Translation is attached.

This collection of information is required by 37 CFR 1.97 and 1.98. The information is required to obtain or retain a benefit by the public which is to file (and by the USPTO to process) an application. Confidentiality is governed by 35 U.S.C. 122 and 37 CFR 1.14. This collection is estimated to take 2 hours to complete, including gathering, preparing, and submitting the completed application form to the USPTO. Time will vary depending upon the individual case. Any comments on the amount of time you require to complete this form and/or suggestions for reducing this burden, should be sent to the Chief Information Officer, U.S. Patent and Trademark Office, P.O. Box 1450, Alexandria, VA 22313-1450. DO NOT SEND FEES OR COMPLETED FORMS TO THIS ADDRESS. **SEND TO: Commissioner for Patents, P.O. Box 1450, Alexandria, VA 22313-1450.**

If you need assistance in completing the form, call 1-800-PTO-9199 (1-800-786-9199) and select option 2.

IN THE UNITED STATES PATENT AND TRADEMARK OFFICE

In re Patent Application of:	)	Examiner: Koyama, Kumiko C.
Zatloukal et al.	)	Art Unit: 2887
Application No.: 10/560,262	)	Confirmation No. 3358
Filed: December 9, 2005	)	
For: EMULATED RADIO FREQUENCY IDENTIFICATION	)	

U.S. Patent and Trademark Office
P.O. Box 1450
Alexandria, VA 22313-1450

ASSERTION OF SMALL ENTITY STATUS

Dear Sir:

Assignee, Varia LLC, is entitled to assert small entity status for the above-referenced patent application pursuant to 37 CFR 1.27 and requests that you amend your records in accordance with this assertion.

Respectfully submitted,

SCHWABE, WILLIAMSON & WYATT, P.C.

Dated: November 12, 2008

/Linda S. Zachariah/
Linda S. Zachariah
Reg. No. 48,057

1420 Fifth Avenue, Suite 3010
Seattle, Washington 98101
Telephone: (206) 622-1711

Electronic Acknowledgement Receipt

EFS ID:	4287464
Application Number:	10560262
International Application Number:	
Confirmation Number:	3358
Title of Invention:	Emulated radio frequency identification
First Named Inventor/Applicant Name:	Peter Zatloukal
Customer Number:	60172
Filer:	Linda S. Zachariah/Allyson Dahmen
Filer Authorized By:	Linda S. Zachariah
Attorney Docket Number:	109909-146181
Receipt Date:	13-NOV-2008
Filing Date:	09-DEC-2005
Time Stamp:	19:19:52
Application Type:	U.S. National Stage under 35 USC 371

Payment information:

Submitted with Payment	no

File Listing:

Document Number	Document Description	File Name	File Size(Bytes)/ Message Digest	Multi Part /.zip	Pages (if appl.)
1	Miscellaneous Incoming Letter	Varia_P064_AssertSmallEntity.pdf	28417 84f4be5fa3aeb28ebede42ae14002debace24173	no	1

Warnings:

Information:

Total Files Size (in bytes):	28417

This Acknowledgement Receipt evidences receipt on the noted date by the USPTO of the indicated documents, characterized by the applicant, and including page counts, where applicable. It serves as evidence of receipt similar to a Post Card, as described in MPEP 503.

New Applications Under 35 U.S.C. 111
If a new application is being filed and the application includes the necessary components for a filing date (see 37 CFR 1.53(b)-(d) and MPEP 506), a Filing Receipt (37 CFR 1.54) will be issued in due course and the date shown on this Acknowledgement Receipt will establish the filing date of the application.

National Stage of an International Application under 35 U.S.C. 371
If a timely submission to enter the national stage of an international application is compliant with the conditions of 35 U.S.C. 371 and other applicable requirements a Form PCT/DO/EO/903 indicating acceptance of the application as a national stage submission under 35 U.S.C. 371 will be issued in addition to the Filing Receipt, in due course.

New International Application Filed with the USPTO as a Receiving Office
If a new international application is being filed and the international application includes the necessary components for an international filing date (see PCT Article 11 and MPEP 1810), a Notification of the International Application Number and of the International Filing Date (Form PCT/RO/105) will be issued in due course, subject to prescriptions concerning national security, and the date shown on this Acknowledgement Receipt will establish the international filing date of the application.

UNITED STATES PATENT AND TRADEMARK OFFICE

UNITED STATES DEPARTMENT OF COMMERCE
United States Patent and Trademark Office
Address: COMMISSIONER FOR PATENTS
P.O. Box 1450
Alexandria, Virginia 22313-1450
www.uspto.gov

APPLICATION NUMBER	FILING OR 371(C) DATE	FIRST NAMED APPLICANT	ATTY. DOCKET NO./TITLE
10/560,262	12/09/2005	Peter Zatloukal	109909-146181

CONFIRMATION NO. 3358

Schwabe Williamson & Wyatt
Suites 1600 1900
1211 SW Fifth Avenue
Portland, OR 97204

IMPROPER CPOA LETTER

OC000000031650694

Date Mailed: 08/19/2008

NOTICE REGARDING POWER OF ATTORNEY

This is in response to the Power of Attorney filed 07/29/2008. The Power of Attorney in this application is not accepted for the reason(s) listed below:

- The Power of Attorney is from an assignee and the Certificate required by 37 CFR 3.73(b) has not been received.

/atesfai/

Office of Data Management, Application Assistance Unit (571) 272-4000, or (571) 272-4200, or 1-888-786-0101

UNITED STATES PATENT AND TRADEMARK OFFICE

UNITED STATES DEPARTMENT OF COMMERCE
United States Patent and Trademark Office
Address: COMMISSIONER FOR PATENTS
P.O. Box 1450
Alexandria, Virginia 22313-1450
www.uspto.gov

APPLICATION NUMBER	FILING OR 371(C) DATE	FIRST NAMED APPLICANT	ATTY. DOCKET NO./TITLE
10/560,262	12/09/2005	Peter Zatloukal	109909-146181

CONFIRMATION NO. 3358

POA ACCEPTANCE LETTER

60172
SCHWABE, WILLIAMSON & WYATT, P.C.
1420 FIFTH, SUITE 3010
SEATTLE, WA 98101

OC000000031661811

Date Mailed: 08/19/2008

NOTICE OF ACCEPTANCE OF POWER OF ATTORNEY

This is in response to the Power of Attorney filed 08/08/2008.

The Power of Attorney in this application is accepted. Correspondence in this application will be mailed to the above address as provided by 37 CFR 1.33.

/atesfai/

Office of Data Management, Application Assistance Unit (571) 272-4000, or (571) 272-4200, or 1-888-786-0101

PTO/SB/80 (01-06)
Approved for use through 12/31/2008. OMB 0651-0035
U.S. Patent and Trademark Office; U.S. DEPARTMENT OF COMMERCE
Under the Paperwork Reduction Act of 1995, no persons are required to respond to a collection of information unless it displays a valid OMB control number.

POWER OF ATTORNEY TO PROSECUTE APPLICATIONS BEFORE THE USPTO

I hereby revoke all previous powers of attorney given in the application identified in the attached statement under 37 CFR 3.73(b).

I hereby appoint:

[X] Practitioners associated with the Customer Number: 60172

OR

[ ] Practitioner(s) named below (if more than ten patent practitioners are to be named, then a customer number must be used):

Name	Registration Number	Name	Registration Number

as attorney(s) or agent(s) to represent the undersigned before the United States Patent and Trademark Office (USPTO) in connection with any and all patent applications assigned only to the undersigned according to the USPTO assignment records or assignment documents attached to this form in accordance with 37 CFR 3.73(b).

Please change the correspondence address for the application identified in the attached statement under 37 CFR 3.73(b) to:

[X] The address associated with Customer Number: 60172

OR

[ ] Firm or Individual Name			
Address			
City		State	Zip
Country			
Telephone		Email	

Assignee Name and Address:
Varia LLC
1000 Dexter Ave N., Suite 210
Seattle, Washington 98109

A copy of this form, together with a statement under 37 CFR 3.73(b) (Form PTO/SB/96 or equivalent) is required to be filed in each application in which this form is used. The statement under 37 CFR 3.73(b) may be completed by one of the practitioners appointed in this form if the appointed practitioner is authorized to act on behalf of the assignee, and must identify the application in which this Power of Attorney is to be filed.

SIGNATURE of Assignee of Record
The individual whose signature and title is supplied below is authorized to act on behalf of the assignee

Signature		Date	7/24/08
Name	John McQueen	Telephone	4254425698
Title	President - Varia LLC		

This collection of information is required by 37 CFR 1.31, 1.32 and 1.33. The information is required to obtain or retain a benefit by the public which is to file (and by the USPTO to process) an application. Confidentiality is governed by 35 U.S.C. 122 and 37 CFR 1.11 and 1.14. This collection is estimated to take 3 minutes to complete, including gathering, preparing, and submitting the completed application form to the USPTO. Time will vary depending upon the individual case. Any comments on the amount of time you require to complete this form and/or suggestions for reducing this burden, should be sent to the Chief Information Officer, U.S. Patent and Trademark Office, U.S. Department of Commerce, P.O. Box 1450, Alexandria, VA 22313-1450. DO NOT SEND FEES OR COMPLETED FORMS TO THIS ADDRESS. **SEND TO: Commissioner for Patents, P.O. Box 1450, Alexandria, VA 22313-1450.**

If you need assistance in completing the form, call 1-800-PTO-9199 and select option 2.

PTO/SB/96 (01-08)
Approved for use through 03/31/2008. OMB 0651-0031
U.S. Patent and Trademark Office; U.S. DEPARTMENT OF COMMERCE
Under the Paperwork Reduction Act of 1995, no persons are required to respond to a collection of information unless it displays a valid OMB control number.

STATEMENT UNDER 37 CFR 3.73(b)

Applicant/Patent Owner: Varia LLC

Application No./Patent No.: 10/560,262 Filed/Issue Date: December 9, 2005

Entitled: EMULATED RADIO FREQUENCY IDENTIFICATION

Varia LLC, a limited liability company
(Name of Assignee) (Type of Assignee, e.g., corporation, partnership, university, government agency, etc.)

states that it is:

1. ☑ the assignee of the entire right, title, and interest; or

2. ☐ an assignee of less than the entire right, title and interest
(The extent (by percentage) of its ownership interest is_____ %)

in the patent application/patent identified above by virtue of either:

A. ☐ An assignment from the inventor(s) of the patent application/patent identified above. The assignment was recorded in the United States Patent and Trademark Office at Reel _____, Frame _____, or for which a copy thereof is attached.

OR

B. ☑ A chain of title from the inventor(s), of the patent application/patent identified above, to the current assignee as follows:

1. From: Zatloukal et al. To: Wildseed Ltd.
The document was recorded in the United States Patent and Trademark Office at
Reel 015680, Frame 0311, or for which a copy thereof is attached.

2. From: Wildseed Ltd. To: Wildseed LLC
The document was recorded in the United States Patent and Trademark Office at
Reel 021316, Frame 0357, or for which a copy thereof is attached.

3. From: Wildseed LLC To: Varia Mobil LLC
The document was recorded in the United States Patent and Trademark Office at
Reel 021316, Frame 0405, or for which a copy thereof is attached.

☑ Additional documents in the chain of title are listed on a supplemental sheet.

☑ As required by 37 CFR 3.73(b)(1)(i), the documentary evidence of the chain of title from the original owner to the assignee was, or concurrently is being, submitted for recordation pursuant to 37 CFR 3.11.

[NOTE: A separate copy (*i.e.,* a true copy of the original assignment document(s)) must be submitted to Assignment Division in accordance with 37 CFR Part 3, to record the assignment in the records of the USPTO. See MPEP 302.08]

The undersigned (whose title is supplied below) is authorized to act on behalf of the assignee.

/Al AuYeung/	August 8, 2008
Signature	Date
Al AuYeung	503-222-9981
Printed or Typed Name	Telephone Number
Attorney at Law - Reg. No. 35,432	
Title	

This collection of information is required by 37 CFR 3.73(b). The information is required to obtain or retain a benefit by the public which is to file (and by the USPTO to process) an application. Confidentiality is governed by 35 U.S.C. 122 and 37 CFR 1.11 and 1.14. This collection is estimated to take 12 minutes to complete, including gathering, preparing, and submitting the completed application form to the USPTO. Time will vary depending upon the individual case. Any comments on the amount of time you require to complete this form and/or suggestions for reducing this burden, should be sent to the Chief Information Officer, U.S. Patent and Trademark Office, U.S. Department of Commerce, P.O. Box 1450, Alexandria, VA 22313-1450. DO NOT SEND FEES OR COMPLETED FORMS TO THIS ADDRESS. **SEND TO: Commissioner for Patents, P.O. Box 1450, Alexandria, VA 22313-1450.**

If you need assistance in completing the form, call 1-800-PTO-9199 and select option 2.

STATEMENT UNDER 37 CFR 3.73(b)

Supplemental Sheet 1

Applicant/Patent Owner: Varia LLC

Application No. / Patent No.: 10/560,262 Filed/Issue Date: December 9, 2005

Entitled: EMULATED RADIO FREQUENCY IDENTIFICATION

4. From: Varia Mobil LLC To: Varia Holdings LLC

   The document was recorded in the United States Patent and Trademark Office at

   Reel 021316, Frame 0437, or for which a copy thereof is attached.

5. From: Varia Holdings LLC To: Varia LLC

   The document was recorded in the United States Patent and Trademark Office at

   Reel 021331, Frame 0233, or for which a copy thereof is attached.

Electronic Acknowledgement Receipt	
EFS ID:	3749849
Application Number:	10560262
International Application Number:	
Confirmation Number:	3358
Title of Invention:	Emulated radio frequency identification
First Named Inventor/Applicant Name:	Peter Zatloukal
Correspondence Address:	Schwabe Williamson & Wyatt - Suites 1600 1900 1211 SW Fifth Avenue Portland OR 97204 US 503-222-9981 -
Filer:	Aloysius T.C. Auyeung/Yvette Chriscaden
Filer Authorized By:	Aloysius T.C. Auyeung
Attorney Docket Number:	109909-146181
Receipt Date:	08-AUG-2008
Filing Date:	09-DEC-2005
Time Stamp:	10:43:50
Application Type:	U.S. National Stage under 35 USC 371

Payment information:

Submitted with Payment	no

File Listing:

Document Number	Document Description	File Name	File Size(Bytes) /Message Digest	Multi Part /.zip	Pages (if appl.)
1	Power of Attorney	Varia_P064_POA373b.pdf	122798 e45b4200df14f0ab197d476b9e40bf25a9ecd547	no	3
Warnings:					
Information:					
			Total Files Size (in bytes):	122798	

This Acknowledgement Receipt evidences receipt on the noted date by the USPTO of the indicated documents, characterized by the applicant, and including page counts, where applicable. It serves as evidence of receipt similar to a Post Card, as described in MPEP 503.

New Applications Under 35 U.S.C. 111
If a new application is being filed and the application includes the necessary components for a filing date (see 37 CFR 1.53(b)-(d) and MPEP 506), a Filing Receipt (37 CFR 1.54) will be issued in due course and the date shown on this Acknowledgement Receipt will establish the filing date of the application.

National Stage of an International Application under 35 U.S.C. 371
If a timely submission to enter the national stage of an international application is compliant with the conditions of 35 U.S.C. 371 and other applicable requirements a Form PCT/DO/EO/903 indicating acceptance of the application as a national stage submission under 35 U.S.C. 371 will be issued in addition to the Filing Receipt, in due course.

New International Application Filed with the USPTO as a Receiving Office
If a new international application is being filed and the international application includes the necessary components for an international filing date (see PCT Article 11 and MPEP 1810), a Notification of the International Application Number and of the International Filing Date (Form PCT/RO/105) will be issued in due course, subject to prescriptions concerning national security, and the date shown on this Acknowledgement Receipt will establish the international filing date of the application.

SCHWABE, WILLIAMSON & WYATT
ATTORNEYS AT LAW

US Bank Centre, 1420 5th Ave., Suite 3010, Seattle, WA 98101 | Phone 206.622.1711 | Fax 206.292.0460 | www.schwabe.com

ROBERT C. PECK
Registered Patent Attorney
Direct Line: 206-407-1513
E-Mail: rpeck@schwabe.com

July 29, 2008

Commissioner for Patents
US Patent & Trademark Office
P.O. Box 1450
Alexandria, VA 22313

Re: US Patent App. No. 10/560,262
Title: EMULATED RADIO FREQUENCY IDENTIFICATION
Inventors: Zatloukal et al.
Our File No.: 109909/146181

Dear Sir:

Review of the above-referenced application record on PAIR indicates that the application is not presently associated with a customer number, although our firm name and address are listed under Correspondence Address.

Transmitted along with this letter is a copy of the PCT General Power of Attorney filed in the corresponding PCT Application of which the instant application is a national stage entry. We ask that the Power of Attorney be made of record in Application No. 10/560,262 and that the matter be associated with our firm's Customer Number 25943.

Please do not hesitate to contact our firm if you have questions concerning this request.

Sincerely,

/Robert C. Peck/

Robert C. Peck
Reg. No. 56,826

RPE:

PCT

GENERAL POWER OF ATTORNEY

(for several international applications filed under the Patent Cooperation Treaty)

(PCT Rule 90.5)

The undersigned person(s) :
(Family name followed by given name; for a legal entity, full official designation. The address must include postal code and name of country.)

ENGSTROM, G. Eric
CEO
Wildseed Ltd.
10210 NE Points Drive, Suite 300
Kirkland, Washington 98033
US

hereby appoint(s) the following person as: [X] agent [ ] common representative

Name and address
(Family name followed by given name; for a legal entity, full official designation. The address must include postal code and name of country.)

AUYEUNG, Aloysius T.C.; HARRINGTON, Robert; KLINDTWORTH, Jason K.; LEWIS, Christopher; MAKI, Nathan R.; PHILIPP, Adam L.K.; and WATT, Robert

SCHWABE, WILLIAMSON & WYATT, P.C.
Pacwest Center, Suites 1600-1900
1211 SW Fifth Avenue
Portland, Oregon 97204
United States of America

to represent the undersigned before

[X] all the competent International Authorities

[ ] the International Searching Authority only

[ ] the International Preliminary Examining Authority only

in connection with any and all international applications filed by the undersigned with the following Office

US as receiving Office

and to make or receive payments on behalf of the undersigned.

Signature(s) *(where there are several persons, each of them must sign; next to each signature, indicate the name of the person signing and the capacity in which the person signs, if such capacity is not obvious from reading this power):*

Wildseed Ltd.

G. Eric Engstrom, CEO

Date: March 26, 2004

Form PCT/Model of general power of attorney (for several international applications) (July 1992)

Electronic Acknowledgement Receipt	
EFS ID:	3692275
Application Number:	10560262
International Application Number:	
Confirmation Number:	3358
Title of Invention:	Emulated radio frequency identification
First Named Inventor/Applicant Name:	Peter Zatloukal
Correspondence Address:	Schwabe Williamson & Wyatt - Suites 1600 1900 1211 SW Fifth Avenue Portland OR 97204 US 503-222-9981 -
Filer:	Robert Clinton Peck/Yvette Chriscaden
Filer Authorized By:	Robert Clinton Peck
Attorney Docket Number:	109909-146181
Receipt Date:	29-JUL-2008
Filing Date:	09-DEC-2005
Time Stamp:	17:06:12
Application Type:	U.S. National Stage under 35 USC 371

Payment information:

Submitted with Payment	no

File Listing:

Document Number	Document Description	File Name	File Size(Bytes) /Message Digest	Multi Part /.zip	Pages (if appl.)
1	Miscellaneous Incoming Letter	VM_P064_Ltr_SubmitPOA.pdf	132838 537e0798596fc57f1689b126cce6ca8742a8cdcd	no	1
Warnings:					
Information:					
2	Power of Attorney	VM_P064_PCTPOA.pdf	29953 7d640b545d13624ccb4f39bf9c7c37a96a77c438	no	1
Warnings:					
Information:					
		Total Files Size (in bytes):	162791		

This Acknowledgement Receipt evidences receipt on the noted date by the USPTO of the indicated documents, characterized by the applicant, and including page counts, where applicable. It serves as evidence of receipt similar to a Post Card, as described in MPEP 503.

New Applications Under 35 U.S.C. 111
If a new application is being filed and the application includes the necessary components for a filing date (see 37 CFR 1.53(b)-(d) and MPEP 506), a Filing Receipt (37 CFR 1.54) will be issued in due course and the date shown on this Acknowledgement Receipt will establish the filing date of the application.

National Stage of an International Application under 35 U.S.C. 371
If a timely submission to enter the national stage of an international application is compliant with the conditions of 35 U.S.C. 371 and other applicable requirements a Form PCT/DO/EO/903 indicating acceptance of the application as a national stage submission under 35 U.S.C. 371 will be issued in addition to the Filing Receipt, in due course.

New International Application Filed with the USPTO as a Receiving Office
If a new international application is being filed and the international application includes the necessary components for an international filing date (see PCT Article 11 and MPEP 1810), a Notification of the International Application Number and of the International Filing Date (Form PCT/RO/105) will be issued in due course, subject to prescriptions concerning national security, and the date shown on this Acknowledgement Receipt will establish the international filing date of the application.

UNITED STATES PATENT AND TRADEMARK OFFICE

UNITED STATES DEPARTMENT OF COMMERCE
United States Patent and Trademark Office
Address: COMMISSIONER FOR PATENTS
P.O. Box 1450
Alexandria, Virginia 22313-1450
www.uspto.gov

U.S. APPLICATION NUMBER NO.	FIRST NAMED APPLICANT	ATTY. DOCKET NO.
10/560,262	Peter Zatloukal	109909-146181

INTERNATIONAL APPLICATION NO.
PCT/US04/18397

I.A. FILING DATE	PRIORITY DATE
06/10/2004	06/13/2003

Schwabe Williamson & Wyatt
Suites 1600 1900
1211 SW Fifth Avenue
Portland, OR 97204

CONFIRMATION NO. 3358

371 ACCEPTANCE LETTER

OC000000018159510

Date Mailed: 03/07/2006

NOTICE OF ACCEPTANCE OF APPLICATION UNDER 35 U.S.C 371 AND 37 CFR 1.495

The applicant is hereby advised that the United States Patent and Trademark Office in its capacity as a Designated / Elected Office (37 CFR 1.495), has determined that the above identified international application has met the requirements of 35 U.S.C. 371, and is ACCEPTED for national patentability examination in the United States Patent and Trademark Office.

The United States Application Number assigned to the application is shown above and the relevant dates are:

12/09/2005	12/13/2005
DATE OF RECEIPT OF 35 U.S.C. 371(c)(1), (c)(2) and (c)(4) REQUIREMENTS	DATE OF COMPLETION OF ALL 35 U.S.C. 371 REQUIREMENTS

A Filing Receipt (PTO-103X) will be issued for the present application in due course. **THE DATE APPEARING ON THE FILING RECEIPT AS THE " FILING DATE" IS THE DATE ON WHICH THE LAST OF THE 35 U.S.C. 371 (c)(1), (c)(2) and (c)(4) REQUIREMENTS HAS BEEN RECEIVED IN THE OFFICE. THIS DATE IS SHOWN ABOVE.** *The filing date of the above identified application is the international filing date of the international application (Article 11(3) and 35 U.S.C. 363).* Once the Filing Receipt has been received, send all correspondence to the Group Art Unit designated thereon.

The following items have been received:

- Copy of the International Application filed on 12/09/2005
- Copy of the International Search Report filed on 12/09/2005
- Preliminary Amendments filed on 12/09/2005
- Information Disclosure Statements filed on 02/23/2006
- Oath or Declaration filed on 12/09/2005
- U.S. Basic National Fees filed on 12/09/2005
- Priority Documents filed on 12/09/2005

Applicant is reminded that any communications to the United States Patent and Trademark Office must be mailed to the address given in the heading and include the U.S. application no. shown above (37 CFR 1.5)

KAREN M WILLIAMS
Telephone: (703) 308-9140 EXT 213

PART 3 - OFFICE COPY

FORM PCT/DO/EO/903 (371 Acceptance Notice)

2876

Attorney Docket No. 109909 146181

Patent

TFW

FEB 2 3 2006
PATENT & TRADEMARK OFFICE

IN THE UNITED STATES PATENT AND TRADEMARK OFFICE

In re Application for:

Ensgstrom et al.

Application No.: 10/560,262

Filed: December 9, 2005

For: EMULATED RADIO FREQUENCY IDENTIFICATION

Examiner: To be assigned

Art Group: To be assigned

Confirmation No. To be assigned

CERTIFICATE OF TRANSMISSION/MAILING
I hereby certify that this correspondence is being facsimile transmitted to the USPTO or deposited with the United States Postal Service with sufficient postage as first class mail in an envelope addressed to: Commissioner for Patents, PO Box 1450, Alexandria, VA 22313-1450 on February 21, 2006.

Typed or printed name : Yvette L. Chriscaden

Signature Yvette L. Chriscaden

MAIL STOP AMENDMENT
Commissioner for Patents
PO Box 1450
Alexandria, VA 22313-1450

INFORMATION DISCLOSURE STATEMENT

Sir:

Pursuant to 37 C.F.R. § 1.97(g), the submission of this Information Disclosure Statement (IDS) is not to be construed as a representation that a search has been made, and, pursuant to 37 C.F.R. § 1.97(h), the submission of this IDS is not to be construed as an admission that the information cited in this IDS is material to patentability.

IPN P064

This IDS is being submitted under one or more of the following sections of 37 C.F.R. § 1.97 (as indicated by an "X" to the left of the appropriate paragraph(s)):

__X__37 C.F.R. § 1.97(b). Filed:
(1) Within three months of a National Application other than a CPA;
(2) Within three months of entry into National Stage;
(3) Before mailing of a first Office Action on the merits; or
(4) Before mailing of a first Office Action after filing an RCE.

_____37 C.F.R. § 1.97(c). Filed before the mailing of a Final Office Action, Notice of Allowance, or an action that otherwise closes prosecution.
And, ONE of the following:
(1) One statement from 37 C.F.R. § 1.97(e);
_____(e)(1) The person signing below certifies that each item of information contained in this IDS was first cited in any communication from a foreign patent office in a counterpart foreign application not more than three months prior to the filing of this IDS; or
_____(e)(2) The person signing below certifies that no item of information contained in this IDS was cited in a communication from a foreign patent office in a counterpart foreign application, and, to the knowledge of the person signing below after making reasonable inquiry, no item of information contained in this IDS was known to any individual designated in 1.56(c) more than three months prior to filing this IDS.

OR

(2) The fee set forth in 37 C.F.R. § 1.17(p).
_____A check in the amount of $180.00 is enclosed.

_____37 C.F.R. § 1.97(d). Filed on or before payment of the issue fee.
And, BOTH of the following:
(1) one statement from 37 C.F.R. § 1.97(e);
_____(e)(1) The person signing below certifies that each item of information contained in this IDS was first cited in any communication from a foreign patent office in a counterpart foreign application not more than three months prior to the filing of this IDS; or
_____(e)(2) The person signing below certifies that no item of information contained in this IDS was cited in a communication from a foreign patent office in a counterpart foreign application, and, to the knowledge of the person signing below after making reasonable inquiry, no item of information contained in this IDS was known to any individual designated in 1.56(c) more than three months prior to filing this IDS.

AND

(2) The fee set forth in 37 C.F.R. § 1.17(p).
_____A check in the amount of $180.00 is enclosed.

Accompanying this IDS is a list of references and a copy of each reference listed therein, EXCEPT copies of references waived under:

(A) one or more of the following sections of 37 C.F.R. § 1.98 (as indicated by an "X" to the left of the appropriate paragraph(s)):

_____37 C.F.R. § 1.98(c) as being cumulative (marked with an "*" on the Form PTO-1449).

_____37 C.F.R. § 1.98(d) as being previously submitted in parent application __/___,___, to which the present application claims priority under 35 U.S.C. § 120.

(B) 1273 Off. Gaz. Pat. Office 55 as being submitted with respect to an application filed after June 30, 2003.

The Commissioner is hereby authorized to charge shortages or credit overpayments to Deposit Account No. 500393. A Fee Transmittal is enclosed in duplicate for fee processing purposes.

Respectfully submitted,
SCHWABE, WILLIAMSON & WYATT, P.C.

Dated: February 21, 2006

Kyle H. Flindt
Registration No. 42,539

Pacwest Center, Suites 1600-1900
1211 SW Fifth Avenue
Portland, Oregon 97204
Telephone: 503-221-9981

Kyle H. Flindt
Reg. No. 42,539

OIPE
FEB 2 3 2006
PATENT & TRADEMARK OFFICE

PTO/SB/08A (08-03)
Approved for use through 07/31/2006. OMB 0651-0031
U.S. Patent and Trademark Office; U.S. DEPARTMENT OF COMMERCE
Under the Paperwork Reduction Act of 1995, no persons are required to respond to a collection of information unless it contains a valid OMB control number.

Substitute for form 1449/PTO

INFORMATION DISCLOSURE STATEMENT BY APPLICANT

(Use as many sheets as necessary)

Sheet 1 of 1

Complete if Known	
Application Number	10/560,262
Filing Date	December 9, 2005
First Named Inventor	Engstrom
Art Unit	To be assigned
Examiner Name	To be assigned
Attorney Docket Number	109909-146181

U. S. PATENT DOCUMENTS

Examiner Initials*	Cite No.[1]	Document Number Number-Kind Code[2] (if known)	Publication Date MM-DD-YYYY	Name of Patentee or Applicant of Cited Document	Pages, Columns, Lines, Where Relevant Passages or Relevant Figures Appear
	1	US- 5,473,318 A	12-05-1995	Martel	
	2	US- 6,421,347 B1	07-16-2002	Borgstahl et al.	
	3	US- 6,476,708 B1	11-05-2002	Johnson	
		US-			
		US-			
		US-			
		US-			
		US-			
		US-			
		US-			
		US-			
		US-			
		US-			
		US-			
		US-			
		US-			
		US-			
		US-			
		US-			

FOREIGN PATENT DOCUMENTS

Examiner Initials*	Cite No.[1]	Foreign Patent Document Country Code[3]-Number[4]-Kind Code[5] (if known)	Publication Date MM-DD-YYYY	Name of Patentee or Applicant of Cited Document	Pages, Columns, Lines, Where Relevant Passages Or Relevant Figures Appear	T[6]

Examiner Signature		Date Considered	

*EXAMINER: Initial if reference considered, whether or not citation is in conformance with MPEP 609. Draw line through citation if not in conformance and not considered. Include copy of this form with next communication to applicant. [1] Applicant's unique citation designation number (optional). [2] See Kinds Codes of USPTO Patent Documents at www.uspto.gov or MPEP 901.04. [3] Enter Office that issued the document, by the two-letter code (WIPO Standard ST.3). [4] For Japanese patent documents, the indication of the year of the reign of the Emperor must precede the serial number of the patent document. [5] Kind of document by the appropriate symbols as indicated on the document under WIPO Standard ST.16 if possible. [6] Applicant is to place a check mark here if English language Translation is attached.

This collection of information is required by 37 CFR 1.97 and 1.98. The information is required to obtain or retain a benefit by the public which is to file (and by the USPTO to process) an application. Confidentiality is governed by 35 U.S.C. 122 and 37 CFR 1.14. This collection is estimated to take 2 hours to complete, including gathering, preparing, and submitting the completed application form to the USPTO. Time will vary depending upon the individual case. Any comments on the amount of time you require to complete this form and/or suggestions for reducing this burden, should be sent to the Chief Information Officer, U.S. Patent and Trademark Office, P.O. Box 1450, Alexandria, VA 22313-1450. DO NOT SEND FEES OR COMPLETED FORMS TO THIS ADDRESS. **SEND TO: Commissioner for Patents, P.O. Box 1450, Alexandria, VA 22313-1450.**

If you need assistance in completing the form, call 1-800-PTO-9199 (1-800-786-9199) and select option 2.

IAP13 Rec'd PCT/PTO 09 DEC 2005

PTO-1390 (Rev. 02-2005)
Approved for use through 3/31/2007. OMB 0651-0021
U.S. Patent and Trademark Office; U.S. DEPARTMENT OF COMMERCE

Under the Paperwork Reduction Act of 1995, no persons are required to respond to a collection of information unless it displays a valid OMB control number.

TRANSMITTAL LETTER TO THE UNITED STATES DESIGNATED/ELECTED OFFICE (DO/EO/US) CONCERNING A SUBMISSION UNDER 35 U.S.C. 371

ATTORNEY'S DOCKET NUMBER
109909-146181

U.S. APPLICATION NO. (If known, see 37 CFR 1.5)
10/560262

INTERNATIONAL APPLICATION NO.	INTERNATIONAL FILING DATE	PRIORITY DATE CLAIMED
PCT/US2004/018397	June 10, 2004	June 13, 2003

TITLE OF INVENTION
EMULATED RADIO FREQUENCY IDENTIFICATION

APPLICANT(S) FOR DO/EO/US
Peter Zatloukal et al.

Applicant herewith submits to the United States Designated/Elected Office (DO/EO/US) the following items and other information:

1. [X] This is a **FIRST** submission of items concerning a submission under 35 U.S.C. 371.
2. [ ] This is a **SECOND** or **SUBSEQUENT** submission of items concerning a submission under 35 U.S.C. 371.
3. [ ] This is an express request to begin national examination procedures (35 U.S.C. 371(f)). The submission must include items (5), (6), (9) and (21) indicated below.
4. [ ] The US has been elected (Article 31).
5. [X] A copy of the International Application as filed (35 U.S.C. 371(c)(2))
   a. [ ] is attached hereto (required only if not communicated by the International Bureau).
   b. [ ] has been communicated by the International Bureau.
   c. [X] is not required, as the application was filed in the United States Receiving Office (RO/US).
6. [ ] An English language translation of the International Application as filed (35 U.S.C. 371(c)(2)).
   a. [ ] is attached hereto.
   b. [ ] has been previously submitted under 35 U.S.C. 154(d)(4).
7. [ ] Amendments to the claims of the International Application under PCT Article 19 (35 U.S.C. 371(c)(3))
   a. [ ] are attached hereto (required only if not communicated by the International Bureau).
   b. [ ] have been communicated by the International Bureau.
   c. [ ] have not been made; however, the time limit for making such amendments has NOT expired.
   d. [ ] have not been made and will not be made.
8. [ ] An English language translation of the amendments to the claims under PCT Article 19 (35 U.S.C. 371(c)(3)).
9. [X] An oath or declaration of the inventor(s) (35 U.S.C. 371(c)(4)).
10. [ ] An English language translation of the annexes of the International Preliminary Examination Report under PCT Article 36 (35 U.S.C. 371(c)(5)).

Items 11 to 20 below concern document(s) or information included:

11. [ ] An Information Disclosure Statement under 37 CFR 1.97 and 1.98.
12. [ ] An assignment document for recording. A separate cover sheet in compliance with 37 CFR 3.28 and 3.31 is included.
13. [X] A preliminary amendment.
14. [ ] An Application Data Sheet under 37 CFR 1.76.
15. [ ] A substitute specification.
16. [ ] A power of attorney and/or change of address letter.
17. [ ] A computer-readable form of the sequence listing in accordance with PCT Rule 13*ter*.2 and 37 CFR 1.821- 1.825.
18. [ ] A second copy of the published International Application under 35 U.S.C. 154(d)(4).
19. [ ] A second copy of the English language translation of the international application under 35 U.S.C. 154(d)(4).
20. [ ] Other items or information:

This collection of information is required by 37 CFR 1.414 and 1.491-1.492. The information is required to obtain or retain a benefit by the public, which is to file (and by the USPTO to process) an application. Confidentiality is governed by 35 U.S.C. 122 and 37 CFR 1.11 and 1.14. This collection is estimated to take 15 minutes to complete, including gathering information, preparing, and submitting the completed form to the USPTO. Time will vary depending upon the individual case. Any comments on the amount of time you require to complete this form and/or suggestions for reducing this burden, should be sent to the Chief Information Officer, U.S. Patent and Trademark Office, U.S. Department of Commerce, P.O. Box 1450, Alexandria, VA 22313-1450. DO NOT SEND FEES OR COMPLETED FORMS TO THIS ADDRESS. **SEND TO: Mail Stop PCT, Commissioner for Patents, P.O. Box 1450, Alexandria, VA 22313-1450.**

IAP13 Rec'd PCT/PTO 09 DEC 2005

PTO-1390 (Rev. 02-2005)
Approved for use through 3/31/2007. OMB 0651-0021
U.S. Patent and Trademark Office; U.S. DEPARTMENT OF COMMERCE
Under the Paperwork Reduction Act of 1995, no persons are required to respond to a collection of information unless it displays a valid OMB control number.

U.S. APPLICATION NO. (if known, see 37 CFR 1.5)	INTERNATIONAL APPLICATION NO.	ATTORNEY'S DOCKET NUMBER
10/560262	PCT/US2004/018397	109909-146181

The following fees have been submitted	CALCULATIONS	PTO USE ONLY
21. [X] Basic national fee..... $300	$ 300	
22. [X] Examination fee If International preliminary examination report prepared by USPTO and all claims satisfy provisions of PCT Article 33(1)-(4)..... $100 All other situations.....$200	$ 200	
23. [X] Search fee Search fee (37 CFR 1.445(a)(2)) has been paid on the international application to the USPTO as an International Searching Authority.....$100 International Search Report prepared and provided to the Office..... $400 All other situations.....$500	$ 100	
TOTAL OF 21, 22 and 23 =	$ 600	
[ ] Additional fee for specification and drawings filed in paper over 100 sheets (excluding sequence listing or computer program listing filed in an electronic medium). The fee is $250 for each additional 50 sheets of paper or fraction thereof.		

Total Sheets	Extra Sheets	Number of each additional 50 or fraction thereof (round up to a whole number)	RATE	
- 100 =	/50 =		x $250	$

Surcharge of $130.00 for furnishing the oath or declaration later than 30 months from the earliest claimed priority date (37 CFR 1.492(h)).	$	

CLAIMS	NUMBER FILED	NUMBER EXTRA	RATE	$	
Total claims	40 - 20 =	20	x $ 50	$ 1000	
Independent claims	4 - 3 =	1	x $200	$ 200	
MULTIPLE DEPENDENT CLAIM(S) (if applicable)			+ $360	$	
			TOTAL OF ABOVE CALCULATIONS =	$ 1800	
[ ] Applicant claims small entity status. See 37 CFR 1.27. Fees above are reduced by ½.					
			SUBTOTAL =	$ 1800	
Processing fee of $130.00 for furnishing the English translation later than 30 months from the earliest claimed priority date (37 CFR 1.492(i)). +				$	
			TOTAL NATIONAL FEE =	$ 1800	
Fee for recording the enclosed assignment (37 CFR 1.21(h)). The assignment must be accompanied by an appropriate cover sheet (37 CFR 3.28, 3.31). $40.00 per property +				$	
			TOTAL FEES ENCLOSED =	$ 1800	
			Amount to be refunded:	$	
			Amount to be charged:	$	

a. [X] A check in the amount of $ 1800 to cover the above fees is enclosed.

b. [ ] Please charge my Deposit Account No. _____ in the amount of $ _____ to cover the above fees. A duplicate copy of this sheet is enclosed.

c. [X] The Commissioner is hereby authorized to charge any additional fees which may be required, or credit any overpayment to Deposit Account No. 500393 A duplicate copy of this sheet is enclosed.

d. [ ] Fees are to be charged to a credit card. **WARNING:** Information on this form may become public. **Credit card information should not be included on this form.** Provide credit card information and authorization on PTO-2038.

NOTE: Where an appropriate time limit under 37 CFR 1.495 has not been met, a petition to revive (37 CFR 1.137(a) or (b)) must be filed and granted to restore the International Application to pending status.

SEND ALL CORRESPONDENCE TO:

Schwabe, Williamson & Wyatt, P.C.
1211 SW Fifth Avenuen, Suites 1600-1900
Portland, OR 97204
Phone: (503) 222-9981

SIGNATURE

Al AuYeung
NAME

35,432
REGISTRATION NUMBER

Sheet No. ...5..

Box No. VIII (iv) DECLARATION: INVENTORSHIP (only for the purposes of the designation of the United States of America)

The declaration must conform to the following standardized wording provided for in Section 214; see Notes to Boxes Nos. VIII, VIII (i) to (v) (in general) and the specific Notes to Box No. VIII (iv). If this Box is not used, this sheet should not be included in the request.

Declaration of inventorship (Rules 4.17(iv) and 51*bis*.1(a)(iv)) for the purposes of the designation of the United States of America:

I hereby declare that I believe I am the original, first and sole (if only one inventor is listed below) or joint (if more than one inventor is listed below) inventor of the subject matter which is claimed and for which a patent is sought.

This declaration is directed to the international application of which it forms a part (if filing declaration with application).

This declaration is directed to international application No. PCT/..... (if furnishing declaration pursuant to Rule 26*ter*).

I hereby declare that my residence, mailing address, and citizenship are as stated next to my name.

I hereby state that I have reviewed and understand the contents of the above-identified international application, including the claims of said application. I have identified in the request of said application, in compliance with PCT Rule 4.10, any claim to foreign priority, and I have identified below, under the heading "Prior Applications," by application number, country or Member of the World Trade Organization, day, month and year of filing, any application for a patent or inventor's certificate filed in a country other than the United States of America, including any PCT international application designating at least one country other than the United States of America, having a filing date before that of the application on which foreign priority is claimed.

Prior Applications: .....

.....

I hereby acknowledge the duty to disclose information that is known by me to be material to patentability as defined by 37 C.F.R. § 1.56, including for continuation-in-part applications, material information which became available between the filing date of the prior application and the PCT international filing date of the continuation-in-part application.

I hereby declare that all statements made herein of my own knowledge are true and that all statements made on information and belief are believed to be true; and further that these statements were made with the knowledge that willful false statements and the like so made are punishable by fine or imprisonment, or both, under Section 1001 of Title 18 of the United States Code and that such willful false statements may jeopardize the validity of the application or any patent issued thereon.

Name: Peter Zatloukal

Residence: Kirkland, Washington
(city and either US state, if applicable, or country)

Mailing Address: 218 Main Street #480, Kirkland, WA 98033

Citizenship: US

Inventor's Signature: ..... Date: June 8, 2004
(if not contained in the request, or if declaration is corrected or added under Rule 26*ter* after the filing of the international application. The signature must be that of the inventor, not that of the agent)
(of signature which is not contained in the request, or of the declaration that is corrected or added under Rule 26*ter* after the filing of the international application)

Name: G. Eric Engstrom

Residence: Kirkland, Washington
(city and either US state, if applicable, or country)

Mailing Address: 12415 Holmes Pt. Dr. NE, Kirkland, WA 98033

Citizenship: US

Inventor's Signature: ..... Date: June 8, 2004
(if not contained in the request, or if declaration is corrected or added under Rule 26*ter* after the filing of the international application. The signature must be that of the inventor, not that of the agent)
(of signature which is not contained in the request, or of the declaration that is corrected or added under Rule 26*ter* after the filing of the international application)

☒ This declaration is continued on the following sheet, "Continuation of Box No. VIII (iv)".

Sheet No. ..6....

Continuation of Box No. VIII (i) to (v) DECLARATION

If the space is insufficient in any of Boxes Nos. VIII (i) to (v) to furnish all the information, including in the case where more than two inventors are to be named in Box No. VIII (iv), in such case, write "Continuation of Box No. VIII ..." (indicate the item number of the Box) and furnish the information in the same manner as required for the purposes of the Box in which the space was insufficient. If additional space is needed in respect of two or more declarations, a separate continuation box must be used for each such declaration. If this Box is not used, this sheet should not be included in the request.

Continuation of Box No. VIII (iv)

Name: Cindy M. Smith

Residence: Kirkland, Washington

Mailing Address: 218 Main Street #673
Kirkland, WA 98033

Citizenship: Canada

Inventor's Signature: CMSmith

Date: June 8, 2004

PATENT APPLICATION SERIAL NO. _____

U.S. DEPARTMENT OF COMMERCE
PATENT AND TRADEMARK OFFICE
FEE RECORD SHEET

12/19/2005 MKAYPAGH 00000008 10560262

01 FC:1631	300.00	OP
02 FC:1641	100.00	OP
03 FC:1633	200.00	OP
04 FC:1615	1000.00	OP
05 FC:1614	200.00	OP

PTO-1556
(5/87)

*U.S. Government Printing Office: 2002 — 489-267/60033

10/560262

IAP13 Rec'd PCT/PTO 09 DEC 2005

Attorney Reference: 109909-146181 *Patent*

IN THE UNITED STATES PATENT AND TRADEMARK OFFICE

In re Patent Application of:	)	Examiner: To be determined
Zatloukal et al.	)	Art Unit: To be determined
Application No.: To be determined Filed: December 9, 2005	)	I hereby certify that this correspondence is being deposited with the United States Postal Service as **First Class Mail** in an envelope addressed to: Commissioner for Patents, P.O. Box 1450, Alexandria, VA 22313-1450 on this date:
For: EMULATED RADIO FREQUENCY IDENTIFICATION	)	December 9, 2005 DATE
MAIL STOP AMENDMENT Commissioner for Patents PO Box 1450 Alexandria, VA 22313-1450		Christine Hurdle TYPED OR PRINTED NAME Yvette L. Chriscoder SIGNATURE

PRELIMINARY AMENDMENT

To The Commissioner for Patents:

This preliminary amendment is before substantive examination on the merits. Consideration of the above-captioned application in view of the amendments is respectfully requested.

The Listing of Claims begins on page 2 of this paper.

Remarks begin on page 8 of this paper.

Amendments to the Claims

This listing of claims will replace all prior versions, and listings, of claims in the application:

Listing of Claims

1. (Original) A method for providing a radio frequency identification (RFID) comprising:

facilitating a user in providing an instruction to a mobile communication device to output a first data in a form of a first radio frequency signal to emulate output of the first data by an active RFID transponder, the mobile communication device being also equipped to facilitate a user in communicating with a user of another communication device, with the communication being facilitated at least in part over a wireless network; and

in response, outputting the first data in the form of a radio frequency signal, emulating output of the first data by an active RFID transponder as instructed by the user.

2. (Original) The method of claim 1, wherein said first data comprises a selected one of a security key and an identifier.

3. (Original) The method of claim 2, wherein said first data comprises a security key, and said security key comprises a door key.

4. (Original) The method of claim 3, wherein said door key comprises a selected one of a garage door key, an exterior door key, an interior door key, and a motor vehicle door key.

5. (Original) The method of claim 2, wherein said first data comprises an identifier, and said identifier comprises a selected one of a social security number, a driver's license number, an affinity program account number, and a credit card number.

6. (Original) The method of claim 1, wherein the method further comprises facilitating the user in selecting the first data from a plurality of data using the mobile communication device.

7. (Original) The method of claim 1, wherein the method further comprises facilitating provision of the first data to the mobile communication device.

8. (Original) The method of claim 7, wherein said facilitating of the provisioning of the data to the mobile communication device, including facilitating provision of at least a signaling attribute associated with the outputting of the data in the form of a radio frequency signal.

9. (Original) The method of claim 1, wherein the method further comprises:

detecting for proximal presence of a RFID reader by the mobile communication device; and

on detection, outputting a second data in a form of a second radio frequency signal, using the mobile communication device, emulating output of the second data by a passive RFID transponder.

10. (Original) The method of claim 9, wherein said detecting comprises sensing for a probing radio frequency signal of the RFID reader by the mobile communication device.

11. (Original) The method of claim 9, wherein said first and second data are the same data.

12. (Original) The method of claim 1, wherein the mobile communication device is a selected one of a wireless mobile phone and a personal digital assistant equipped with communication capability.

13. (Original) A method for providing a radio frequency identifier (RFID), comprising:

detecting for proximal presence of a RFID reader by a mobile communication device, the mobile communication device being also equipped to facilitate a user in communicating with a user of another communication device, with the communication being facilitated at least in part over a wireless network; and

on detection, outputting a data in a form of a radio frequency signal, using the mobile communication device, emulating output of the data by a passive RFID transponder.

14. (Original) The method of claim 13, wherein said detecting comprises sensing for a probing radio frequency signal of the RFID reader by the mobile communication device.

15. (Original) The method of claim 13, wherein said data comprises a security key.

16. (Original) The method of claim 15, wherein said security key comprises a door key.

17. (Original) The method of claim 16, wherein said door key comprises a selected one of a garage door key, an exterior door key, an interior door key, and a motor vehicle door key.

18. (Original) The method of claim 13, wherein the method further comprises facilitating provision of the data to the mobile communication device.

19. (Original) The method of claim 18, wherein said facilitating of the provisioning of the data to the mobile communication device, including facilitating provision of at least a signaling attribute associated with the outputting of the data in the form of a radio frequency signal.

20. (Original) The method of claim 13, wherein the mobile communication device is a selected of a wireless mobile phone and a personal digital assistant equipped with communication capability.

21. (Original) A mobile communication device comprising:

a transmitter to transmit a radio frequency signal;

a storage medium to store a first data and instructions to operate the transmitter to selectively (a) output the first data in a form of a radio frequency signal, in response to a user instruction, emulating output of the first data by an active radio frequency identifier (RFID) transponder, and (b) facilitate a user to communicate with another user of another communication device, with the communication being facilitated at least in part over a wireless network; and

a processor coupled to the transmitter and the storage to execute the instructions.

22. (Original) The device of claim 21, wherein said first data comprises a selected one of a security key and an identifier.

23. (Original) The device of claim 22, wherein said first data comprises a security key, and said security key comprises a door key.

24. (Original) The device of claim 23, wherein said door key comprises a selected one of a garage door key, an exterior door key, an interior door key, and a motor vehicle door key.

25. (Original) The device of claim 22, wherein said first data comprises an identifier, and said identifier comprises a selected one of a social security number, a driver's license number, an affinity program account number, and a credit card number.

26. (Original) The device of claim 21, wherein the instructions are further designed to facilitate the user in selecting the first data from a plurality of data, and instructing said output.

27. (Original) The device of claim 21, wherein the instructions are further designed to facilitate provision of the first data to the mobile communication device.

28. (Original) The device of claim 27, wherein the instructions are further designed to include with said facilitating, provisioning of at least a signaling attribute associated with the outputting of the first data in the form of a radio frequency signal.

29. (Original) The device of claim 21, wherein the instructions are further designed to detect for proximal presence of a RFID reader; and

on detection, outputting a second data in a form of a second radio frequency signal, emulating output of the second data by a passive RFID transponder.

30. (Original) The device of claim 29, wherein the instructions are further designed to sense for a probing radio frequency signal of the RFID reader.

31. (Original) The device of claim 29, wherein said first and second data are the same data.

32. (Original) The device of claim 21, wherein the mobile communication device is a selected of a wireless mobile phone and a personal digital assistant equipped with communication capability.

33. (Original) A mobile communication device comprising:

a transmitter to transmit a radio frequency signal;

a storage medium to store a first data and instructions to operate the transmitter to selectively (a) detect for proximal presence of a radio frequency identifier (RFID) reader, and on detection, output a data in a form of a radio frequency signal, emulating output of the data by a passive RFID transponder, and (b) facilitate a user to communicate with another user of another communication device, with the communication being facilitated at least in part over a wireless network; and

a processor coupled to the transmitter and the storage to execute the instructions.

34. (Original) The device of claim 33, wherein said instructions are further designed to sense for a probing radio frequency signal of the RFID reader.

35. (Original) The device of claim 33, wherein said data comprises a security key.

36. (Original) The device of claim 35, wherein said security key comprises a door key.

37. (Original) The device of claim 36, wherein said door key comprises a selected one of a garage door key, an exterior door key, an interior door key, and a motor vehicle door key.

38. (Original) The device of claim 33, wherein the instructions are further designed to facilitate provision of the data to the mobile communication device.

39. (Original) The device of claim 38, wherein the instructions are further designed to include with said facilitating, provisioning of at least a signaling attribute associated with the outputting of the data in the form of a radio frequency signal.

40. (Original) The device of claim 33, wherein the mobile communication device is a selected of a wireless mobile phone and a personal digital assistant equipped with communication capability.

41.-60. (Cancelled)

Remarks

Claims 41-60 have been cancelled, and no new claims have been added. Accordingly, claims 1-40 are now pending. Consideration of the application, as amended, is respectfully requested.

If the Examiner has any questions concerning the present paper, the Examiner is kindly requested to contact the undersigned at (503) 222-9981. If any fees are due in connection with filing this paper, the Commissioner is authorized to charge the Deposit Account of Schwabe, Williamson & Wyatt, P.C., No. 50-0393.

Respectfully submitted,
SCHWABE, WILLIAMSON & WYATT, P.C.

Date: December 9, 2005 by: Reg. No. 42,539 for
Al AuYeung
Reg. No.: 35,432

Schwabe, Williamson & Wyatt, P.C.
Pacwest Center, Suites 1600-1900
1211 SW Fifth Avenue
Portland, Oregon 97222
Telephone: 503-222-9981

INTERNATIONAL SEARCH REPORT

International application No.
PCT/US04/18397

A. CLASSIFICATION OF SUBJECT MATTER
IPC(7) : G06K 7/10
US CL : 235/472.02
According to International Patent Classification (IPC) or to both national classification and IPC

B. FIELDS SEARCHED

Minimum documentation searched (classification system followed by classification symbols)
U.S. : Please See Continuation Sheet

Documentation searched other than minimum documentation to the extent that such documents are included in the fields searched
NONE

Electronic data base consulted during the international search (name of data base and, where practicable, search terms used)
EAST

C. DOCUMENTS CONSIDERED TO BE RELEVANT

Category *	Citation of document, with indication, where appropriate, of the relevant passages	Relevant to claim No.
X	US 6,421,347 B1 (BORGSTAHL ET AL) 16 JUL 2002 (16.07.2002), SEE ENTIRE DOCUMENT	1, 6-8, 12, 21, 26-28, 32, 41, 46-48, 52
---		---
Y		2-5, 9-11, 13-20, 22-25, 29-31, 33-40, 42-45, 49-51, 53-60
Y	US 5,473,318 A (MARTEL) 05 DEC 1995 (05.12.1995), SEE ENTIRE DOCUMENT	2-4, 15-17, 22-24, 35-37, 42-44, 55-57
Y	US 6,476,708 B1 (JOHNSON) 05 NOV 2002 (05.11.2002), SEE ENTIRE DOCUMENT	9-11, 13-14, 18-20, 29-31, 33-34, 38-40, 49-51, 53-54, 58-60

☐ Further documents are listed in the continuation of Box C. ☐ See patent family annex.

* Special categories of cited documents:

"A" document defining the general state of the art which is not considered to be of particular relevance

"E" earlier application or patent published on or after the international filing date

"L" document which may throw doubts on priority claim(s) or which is cited to establish the publication date of another citation or other special reason (as specified)

"O" document referring to an oral disclosure, use, exhibition or other means

"P" document published prior to the international filing date but later than the priority date claimed

"T" later document published after the international filing date or priority date and not in conflict with the application but cited to understand the principle or theory underlying the invention

"X" document of particular relevance; the claimed invention cannot be considered novel or cannot be considered to involve an inventive step when the document is taken alone

"Y" document of particular relevance; the claimed invention cannot be considered to involve an inventive step when the document is combined with one or more other such documents, such combination being obvious to a person skilled in the art

"&" document member of the same patent family

Date of the actual completion of the international search
09 November 2004 (09.11.2004)

Date of mailing of the international search report
15 FEB 2005

Name and mailing address of the ISA/US
Mail Stop PCT, Attn: ISA/US
Commissioner for Patents
P.O. Box 1450
Alexandria, Virginia 22313-1450
Facsimile No. (703) 305-3230

Authorized officer
UYEN-CHAU N. LE
Sharon S. Hoppe
Telephone No. 571-272-2397

Form PCT/ISA/210 (second sheet) (January 2004)

BEST AVAILABLE COPY

INTERNATIONAL SEARCH REPORT

International application No.
PCT/US04/18397

Continuation of B. FIELDS SEARCHED Item 1:
235/472.02, 375, 376, 383, 385
340/825.72

Form PCT/ISA/210 (extra sheet) (January 2004)

(12) INTERNATIONAL APPLICATION PUBLISHED UNDER THE PATENT COOPERATION TREATY (PCT)

(19) World Intellectual Property Organization
International Bureau

(43) International Publication Date
29 December 2004 (29.12.2004)

PCT

(10) International Publication Number
WO 2004/114239 A3

(51) International Patent Classification[7]: G06K 7/10

(21) International Application Number: PCT/US2004/018397

(22) International Filing Date: 10 June 2004 (10.06.2004)

(25) Filing Language: English

(26) Publication Language: English

(30) Priority Data:
60/478,245 13 June 2003 (13.06.2003) US

(71) Applicant *(for all designated States except US)*: **WILD-SEED LTD.** [US/US]; 10210 NE Points Drive, Suite 300, Kirkland, WA 98033 (US).

(72) Inventors; and
(75) Inventors/Applicants *(for US only)*: **ZATLOUKAL, Peter** [US/US]; 218 Main Street #480, Kirkland, WA 98033 (US). **ENGSTROM, Eric, G.** [US/US]; 12415 Holmes Pt. Dr. NE, Kirkland, WA 98033 (US). **SMITH, Cindy, M.** [CA/US]; 218 Main Street #673, Kirkland, WA 98033 (US).

(74) Agents: **AUYEUNG, Aloysius** et al.; Schwabe, Williamson & Wyatt, P.C., Pacwest Center, Stes. 1600-1900, 1211 SW Fifth Avenue, Portland, OR 97204-3795 (US).

(81) Designated States *(unless otherwise indicated, for every kind of national protection available)*: AE, AG, AL, AM, AT, AU, AZ, BA, BB, BG, BR, BW, BY, BZ, CA, CH, CN, CO, CR, CU, CZ, DE, DK, DM, DZ, EC, EE, EG, ES, FI, GB, GD, GE, GH, GM, HR, HU, ID, IL, IN, IS, JP, KE, KG, KP, KR, KZ, LC, LK, LR, LS, LT, LU, LV, MA, MD, MG, MK, MN, MW, MX, MZ, NA, NI, NO, NZ, OM, PG, PH, PL, PT, RO, RU, SC, SD, SE, SG, SK, SL, SY, TJ, TM, TN, TR, TT, TZ, UA, UG, US, UZ, VC, VN, YU, ZA, ZM, ZW.

(84) Designated States *(unless otherwise indicated, for every kind of regional protection available)*: ARIPO (BW, GH, GM, KE, LS, MW, MZ, NA, SD, SL, SZ, TZ, UG, ZM, ZW), Eurasian (AM, AZ, BY, KG, KZ, MD, RU, TJ, TM), European (AT, BE, BG, CH, CY, CZ, DE, DK, EE, ES, FI, FR, GB, GR, HU, IE, IT, LU, MC, NL, PL, PT, RO, SE, SI, SK, TR), OAPI (BF, BJ, CF, CG, CI, CM, GA, GN, GQ, GW, ML, MR, NE, SN, TD, TG).

[Continued on next page]

(54) Title: EMULATED RADIO FREQUENCY IDENTIFICATION

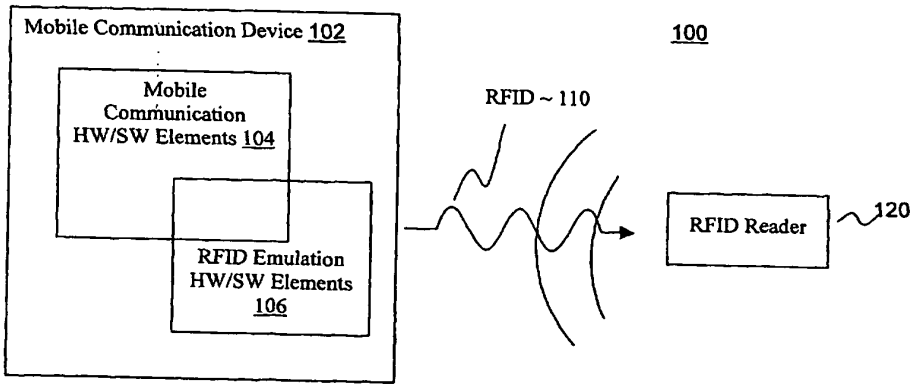

(57) Abstract: A mobile communication device (102) is equipped with hardware and/or software components (104) to enable the device to output a data in a form of a radio frequency signal (110), emulating outputting of the data by either an active or a passive RFID transponder (204, 206). The data may be a security key or an identifier. Emulation of an active RFID transponder (204) includes facilitating selection of the data and instruction to output by a user. Emulation of a passive RFID transponder (206) includes detecting for proximal presence of a RFID reader (120). Either case, provision of the data to the mobile communication device may include provision of associated signal attribute(s).

WO 2004/114239 A3

Declaration under Rule 4.17:
— *of inventorship (Rule 4.17(iv)) for US only*

Published:
— *with international search report*

(88) Date of publication of the international search report:
6 May 2005

For two-letter codes and other abbreviations, refer to the "Guidance Notes on Codes and Abbreviations" appearing at the beginning of each regular issue of the PCT Gazette.

EMULATED RADIO FREQUENCY IDENTIFICATION

RELATED APPLICATION

This application is a non-provisional application of provisional application number 60/478,245, titled "Radio Frequency Identification Using Mobile Communication Device", filed on June 13, 2003, and claims priority to said provisional application.

FIELD OF THE INVENTION

The present invention relates to the fields of security, communication, and data processing. More specifically, the present invention is related to an emulated radio frequency data input method.

BACKGROUND OF THE INVENTION

It wasn't that long ago, even residents in medium size cities still feel secured enough to leave their homes unlocked and/or their garages open. In general, one can access one's place of employment, including parking facilities as well as one's office without identification or access keys.

In the world of commerce, things were also simpler. One typically may shop and consume goods and services, at relatively low prices, without having to be affiliated with any programs or entities.

However, the world has become a lot more complex in recent years. Virtually, all properties of any value, premises, including one's home, have to be secured, even for relatively small towns and cities. One can hardly shop and consume any goods and services, without having signed up with some promotional frequent "usage" programs or becoming affiliated with the commercial entities. The employment of affinity marketing has reached a point even neighboring grocery chains employ them, and not just airlines, hotels, or wholesale discount retailers.

As a result, it is not uncommon to find a person having to carry a number of physical keys and access/identification cards/tags to gain access to secured premises, such as one's home, office, parking garage, and so forth. Additionally, the

person is likely to carry a number of remote security control devices, such as a key with remote control for gaining access to his/her vehicle, a garage door opener for gaining access to the person's garage at home, and so forth. The person is also likely to carry a number of affinity identification cards with member identifiers identifying the person as being affiliated with certain co-op or frequent patronage programs, such as wholesale discount retailers, airline or hotel frequent traveler program, and so forth, that entitle the person to certain benefits, such as discounts or rewards.

BRIEF DESCRIPTION OF THE DRAWINGS

The present invention will be described by way of exemplary embodiments, but not limitations, illustrated in the accompanying drawings in which like references denote similar elements, and in which:

Figure 1 illustrates an overview of the present invention, in accordance with one embodiment;

Figure 2 illustrates a method view of the present invention, in accordance with one embodiment;

Figure 3 illustrates the relevant hardware elements of the device of **Fig. 1** in further details, in accordance with one embodiment;

Figure 4 illustrates the transceiver of **Fig. 3** in further details, in accordance with another embodiment;

Figures 5a-5b illustrate the exploded views of two embodiments of the mobile communication device of **Fig. 1**;

Figures 5c-5d illustrate an exploded view of another embodiment of the mobile communication device of **Fig. 1**;

Figure 6a-6h illustrate a number of example screens of an end user interface, suitable for use to practice the present invention, in accordance with one embodiment; and

Figure 7 illustrates the operational flow of the relevant aspects of the software in support of the RFID feature of the present invention, in accordance with one embodiment.

DETAILED DESCRIPTION OF EMBODIMENTS OF THE INVENTION

Embodiments of the present invention includes an emulated RFID method, more specifically, an emulated RFID method, using a mobile communication device, including the device itself, and certain hardware and/or software embodied therein for the practice of the emulated RFID method.

In the following description, various aspects of the illustrative embodiments of the present invention will be described. However, alternate embodiments may be practiced with only some or all aspects of the illustrative embodiments of the present invention. For purposes of explanation, specific numbers, materials and configurations are set forth in order to provide a thorough understanding of the present invention. However, alternate embodiments may be practiced without the specific details. In other instances, well-known features are omitted or simplified in order not to obscure the essence of the illustrative embodiments of the present invention.

Terminology

Parts of the description will be presented in data processing terms, such as data, selection, retrieval, generation, and so forth, consistent with the manner commonly employed by those skilled in the art to convey the substance of their work to others skilled in the art. As well understood by those skilled in the art, these quantities take the form of electrical, magnetic, or optical signals capable of being stored, transferred, combined, and otherwise manipulated through electrical and/or optical components of a processor and its subsystems.

Part of the descriptions will employ various abbreviations, including but are not limited to:

CDROM	Compact Disc Read Only Memory
DDRAM	Dynamic Direct Random Access Memory
DVD	Digital Versatile Disc
EEPROM	Electrically Eraseable Programmable Read-Only-

	Memory
HTTP	HyperText Transmission Protocol
SDRAM	Static Direct Random Access Memory
SMS	Small Messaging Service

The term "number" as used in this application to describe a data, including both its usage in the specification and the claims, typically refers to numeric data, as the word "number" is conventionally used in mathematics. However, in certain contexts, the "number" may also include alphabet or special characters, as the term is conventionally understood by those skilled in the art in those contexts. For examples, a driver's license number, a passport number, an employee number, or a student ID number, as each of these terms is conventionally used, often includes one or more alphabets or special characters, even though they are referred to as "numbers". The term accordingly is to be given the meaning that is consistent with the context under which the term is used.

Section Headings, Order of Descriptions and Embodiments

Section headings are merely employed to improve readability, and they are not to be construed to restrict or narrow the present invention.

Various operations will be described as multiple discrete steps in turn, in a manner that is most helpful in understanding the present invention, however, the order of description should not be construed as to imply that these operations are necessarily order dependent. In particular, these operations need not be performed in the order of presentation.

The phrase "in one embodiment" is used repeatedly. The phrase generally does not refer to the same embodiment, however, it may. The terms "comprising", "having" and "including" are synonymous, unless the context dictates otherwise.

Overview

Refer now to **Figure 1**, wherein a block diagram illustrating an overview of the present invention **100**, in accordance with one embodiment, is shown. As illustrated, for the embodiment, mobile communication device **102** is equipped with hardware and/or software elements **104** to perform its primary function, which is to facilitate a user of device **102** to engage in communication with another user of another communication device (not shown). In various embodiments, the communication may be audio (such as phone calls), textual (such as messaging) and/or visual (such as airtexting using light sources). Additionally, for the embodiment, mobile communication device **102** is equipped with hardware and/or software elements **106** to facilitate provision or transfer of a key/identifier in a form a radio frequency signal **110**, which may be read e.g. by a radio frequency identifier (RFID) reader **120**. In turn, the provision of RFID **110** may be responded to by a system (not shown) with which RFID reader **120** is a part or coupled to.

As depicted in **Fig. 1**, blocks **104** and **106** "intersect" with one another. The "intersection" represents the fact that in preferred embodiments of the present invention, substantial portions of the hardware and/or software elements employed to provide a RFID, are the same elements employed to facilitate the primary function of device **102**, i.e. to facilitate a user in communicating with another user of another communication device.

In other words, illustrative embodiments of the present invention advantageously leverage on existing elements of mobile communication device **102**, and supplement them, to enable mobile communication device **102** to be able to provide a RFID, emulating a RFID transponder, as well as facilitating user communication.

As will be described in more detail below, in preferred embodiments, mobile communication device **102** is equipped to provide RFID, emulating an active and/or a passive RFID transponder.

Further, RFID **110** may be any keys and/or identifiers, including but not limited to security keys, such as garage door "keys", exterior or interior door keys, or identifiers, such as, employee numbers, driver's license numbers, social security

numbers, credit card numbers (optionally, including expiration dates), affinity program member identifiers, and so forth.

Continue to refer to **Fig. 1**, except for the present invention incorporated therein, mobile communication device **102** represents a broad range of mobile communication devices known in the art, including but are not limited to wireless mobile phones and personal digital assistants equipped with communication capability.

The term "wireless mobile phone" as used herein, including the specification and the claims, refers to the class of telephony devices equipped to facilitate a user in communicating with another user of another communication device, notwithstanding the user's movement around different geographic areas, so long the wireless mobile phone is in contact with a base/service station of a wireless network service provider. The term includes the analog as well as the digital subclasses. Communication may be voice and/or data, audio, textual and/or visual. The other user/communication device may be mobile or land line based.

RFID reader **120** represents a broad range of such devices known in the art or to be designed. Currently, most RFID readers **120** employ proprietary formats/protocols. That is, RFID readers **120** of different manufacturers tend to employ different frequencies, amplitudes, and/or keying schemes (which may be frequency shifting keying (FSK), amplitude shifting keying (ASK) or phase shifting keying (PSK)).

Various embodiments of the methods of the present inventions, including elements **106**, in particular, added elements, will be described in turn below.

Method

Figure 2 illustrates a method view of the present invention, in accordance with one embodiment. As illustrated, device **102** is first provided with the RFIDs, block **202**. The RFIDs may be provided in any one of a number of known or to be designed manners, including but are not limited to

- manual entry, using a keypad of device **102**,
- read into device **102**, from an access/identification card, using a magnetic or optical card reader of device **102**,

- downloaded into device **102**, from a coupled computing device, through a serial/parallel port of device **102** or through a network interface of device **102** using SMS or HTTP messages.

Typically, provision of a RFID will include the manner the RFID is to be outputted, i.e. signaled. As alluded to earlier, the manner it is to be signaled is dependent on the format/protocol employed by the intended RFID reader **120**. For examples, for a garage door key, the format/protocol employed by RFID reader **120** of the garage opener system, and for an affinity program member identifier, the format/protocol employed by RFID reader **120** of the point-of-sale system of the entity offering the affinity program.

Alternatively, a default signaling format/protocol, such as an industry standard, the most popular proprietary format/protocol, or a selected proprietary format/protocol may be assumed instead, when one is not provided.

During operation, in response to a user instruction, typically after the user has selected the RFID to be outputted from a number of RFIDs stored in device **102**, block **203**, device **102** outputs the selected RFID as instructed, emulating an active RFID transponder, block **204**.

For the embodiment, one RFID, e.g. an access key/identifier (such as an employee number), may also be selected/designated as a default RFID, the output of which may be emulated in a passive manner. That is, the selected/designated default RFID will be outputted automatically, whenever device **102** is within the proximal presence, or more specifically, the operational space, of an intended RFID reader **120**.

Accordingly, device **102** monitors for probing signals of an intended RFID reader **120** (or a type of RFID readers **120**), to determine whether device **102** is within the operational space of such a RFID reader **120**, block **205**. On so determining, device **102** outputs the designated RFID automatically, emulating a passive RFID transponder, block **206**.

A Hardware/Software Implementation

Figure 3 illustrates the relevant elements of device **102**, in accordance with one embodiment. As illustrated, for the embodiment, device **102** includes processor **302**, memory **304**, persistent store **306**, transceiver **308**, and a number of other components **310**, coupled to each other via bus **312**.

Persistent store **306** and memory **304** are employed to store permanent and working copies of a software implementation of the operating logic **320** of device **102**, including the supplemental RFID feature **322**. In various embodiments, persistent store **306** may be an EEPROM (or like kind variants, such as a Flash Memory, a Memory Stick), a magnetic or optical disk drive, a CDROM, a DVD drive and so forth. Memory **304** may be any SDRAM, DDRAM or other high speed volatile as way as non-volatile storage devices known in the art.

Processor **302** is employed to execute operating logic **320**, including RFID feature **322**. As will be readily apparent from the description to follow, operating logic **320** may be implemented in any one of a number of suitable system programming languages, including but not limited to high level languages that may be compiled into executable instructions supported by processor **302**. Processor **302** may be any one of a number of processors designed or to be designed for mobile devices.

Except for transceivers **308**, RFID feature **322** and the manner the various elements of **Fig. 3** are used to practice the present invention, the other illustrated elements are known in the art, and accordingly will not be further described. One embodiment of transceiver **308** will be described referencing **Fig. 4**, and one embodiment of RFID feature **322** will be described, referencing **Fig. 6-7**.

As described earlier, processor **302**, memory **304**, persistent store **306** and bus **312** may be shared elements of device **102**, also employed to implement the primary communication function of device **102**. However, in alternate embodiments, dedicated elements may be employed for some or all of these elements instead.

In one embodiment, device **102** is a wireless mobile telephone, an exploded view of which is illustrated in **Fig. 5a**. Wireless mobile phone **500**, in addition to the earlier described elements, also includes display **506**, control buttons **504**, keypad

502, antenna **508**, body **512** and cover **514**. Body **512** is substantially rectangular in shape. Further, body **512** is palm-sized or smaller.

For the embodiment, cover **514** includes embedded electronic components having instructions, data, and/or locations to obtain such instructions and/or data to personalize, customize and/or enhance phone **500**. Phone **500** includes complementary electronic component interface **516** in support of such personalization, customization and/or enhancement.

Cover **514** may form a part of housing **512**, i.e. a required element to complete phone **500**, or it may be an accessory to be adorned by phone **500**, i.e. not a required element to complete phone **500**.

In another embodiment, device **102** is a PDA, an exploded view of which, is illustrated in **Fig. 5b**. PDA **502**, in addition to the earlier described elements, also includes display **524**, control buttons **522**, antenna **526**, body **532**, and cover **534**. Body **530** is also substantially rectangular in shape, as well as palm-sized or smaller.

Similarly, for the embodiment, cover **534** includes embedded electronic components having instructions, data, and/or locations to obtain such instructions and/or data to personalize, customize and/or enhance PDA **520**. PDA **520** includes complementary electronic component interface **536** in support of such personalization, customization and/or enhancement.

Cover **534** may form a part of housing **532**, i.e. a required element to complete PDA **520**, or it may be an accessory to be adorned by PDA **520**, i.e. not a required element to complete PDA **520**.

Figure 5c-5d illustrate yet another embodiment of device **102**, another wireless mobile telephone, an exploded view of which is illustrated. Wireless mobile phone **540** is similarly constituted as the earlier described embodiments, including body **542** and cover **544**. However, body **542** has a substantially boomerang or banana shape. Body **542** is also typically palm-sized or smaller.

For the embodiment, cover **544** also includes embedded electronic components having instructions, data, and/or locations to obtain such instructions and/or data to personalize, customize and/or enhance phone **540**. Phone **540** includes complementary electronic component interface (not shown) in support of such personalization, customization and/or enhancement.

Cover **544** may form a part of housing **542**, i.e. a required element to complete phone **540**, or it may be an accessory to be adorned by phone **540**, i.e. not a required element to complete phone **540**.

In all or selected one(s) of these embodiments, some or all elements **106** in support of the RFID feature of the present invention may be provided through embedded electronic components of the housing/accessory covers.

Smart covers are the subject matters of subject matter of co-pending U.S. Application, number 10/087,098, filed March 1, 2002, entitled "Personalizing Electronic Devices and Smart Covering", and U.S. Application, number <insert>, filed May 2, 2003, entitled "Personalization of Mobile Electronic Devices and Smart Accessory Cover", which specifications are hereby fully incorporated by reference.

While all three embodiments of **Fig. 5a-5d** have been illustrated with smart covers and external antennas. In alternate embodiments, the present invention may be practiced without smart covers and/or external antennas. The present invention may be practiced with conventional covers, without embedded intelligence and/or internal antennas.

Transceiver

Figure 4 illustrates transceiver **308** of **Fig. 3** in further details, in accordance with one embodiment. As illustrated, for the embodiment, transceiver **308** includes a joint radio frequency (RF) transmit/receive (TX/RX) section **402**, separate signal processing sections **408** and **410** for a range of higher frequencies and a range of low frequencies, switch **404** and splitter **406**. The elements are coupled to each other as shown.

For the embodiment, joint RF TX/RX **402** includes in particular, switch **420**, filters **412** and **422**, low noise amplifier **424** and power amplifier **414**, coupled to one another as shown. Switch **420** is employed to switch between transmitting and receiving RF signals. Filters **412** and **422**, low noise amplifier **424** and power amplifier **414** are employed to perform their conventional filtering and amplification functions on the transmit and receive signals.

For transmission, switch **404** switches between the output of high frequency signal processing **410** and the output of low frequency signal processing **408** to the transmit path of Joint RF TX/RX **402**.

For reception, splitter **406** splits the output of the receive path of Joint RF TX/RX **402** and provides the receive signal to high frequency signal processing **410** as well as low frequency signal processing **408**.

For the embodiment, high frequency signal processing **410** performs up and down conversions of the transmit and receive signals of the primary communication function of mobile communication device **102**, e.g. the transmit and receive signals of a voice call. In one embodiment, the transmit and receive signals are transmitted and received in the GHz ranges.

Low frequency signal processing **408**, on the other hand, performs up and down conversions of the transmit and receive signals of the RFID feature, e.g. the output signal of a RFID to emulate either an active or a passive transponder, and the received probing signal of a RFID reader. In one embodiment, the transmit and receive signals are transmitted and received in the MHz ranges.

Up and down conversions, filtering, amplifications, and so forth, in and of themselves, except for the manner they are being used to provide RFIDs using a mobile communication device, are known in the art, accordingly, will not be further described.

RFID Feature

Figures 6-7 illustrate selected portions of an example end user interface, and the operational flow of the relevant aspects of RFID feature **322** respectively, in accordance with one embodiment. **Figure 6** comprises **Fig. 6a-6h**.

As illustrated in **Fig. 6a**, for the embodiment, the user interface includes screen **602** having selectable text display "RFID" **604**, with which a user may interact to launch the RFID function (by selecting text display **604**, using e.g. control keys **504**).

As illustrated in **Fig. 6b**, for the embodiment, the user interface further includes screen **612** enumerating a list of RFIDs **614** stored in device **102**. List **614** may be displayed for example, among other situations, in response to a user's

selection of text display **604** of screen **602**. A user may select one of the RFIDs, and instruct device **102** to output the selected RFID in a form of an appropriate radio frequency signal, emulating provision of the RFID by an active RFID transponder, using e.g. a "send/call" key of device **102**.

Screen **612** also includes selectable "option" button **616**, with which a user may interact to display a list of RFID management options, using e.g. control keys **504**.

As illustrated in **Fig. 6c**, for the embodiment, the user interface further includes screen **622** enumerating a list of RFID management options **624**, such as "add", "edit" or "delete" RFIDs. List **624** may be displayed for example, among other situations, in response to a user's selection of "option" **616** of screen **612**.

As illustrated in **Fig. 6d**, for the embodiment, the user interface further includes screen **632** displaying field **634**, through which a user may enter/edit a RFID name. Field **634** may be displayed for example, among other situations, in response to a user's selection of "add" or "edit" of screen **622**.

As illustrated in **Fig. 6e**, for the embodiment, the user interface further includes screen **642** displaying field **644**, through which a user may enter/edit a RFID. Field **644** may be displayed for example, among other situations, in response to a user indicating completion of entry of a RFID name using screen **632**.

As illustrated in **Fig. 6f**, for the embodiment, the user interface further includes screen **652** displaying a list of RFID types **654**, with which a user may select and associate with a RFID. List **654** may be displayed for example, among other situations, in response to a user indicating completion of entry of a RFID, using screen **642**, thereby allowing the user to associate a RFID reader type with the entered RFID.

Each RFID reader type is assumed to have a deterministic RFID signaling format/protocol. Accordingly, by selecting the RFID reader type, the user is effectively selecting or specifying the RFID signaling format/protocol. In alternate embodiment, a user may be requested to select the RFID signaling format/protocol explicitly, as opposed to implicitly, in the illustrated embodiment.

As illustrated in **Fig. 6g**, for the embodiment, the user interface further includes screen **662** displaying a request **664** to confirm whether a RFID is to be

selected or designated as the default RFID to be used for emulation of passive transponders. Request **664** may be displayed for example, among other situations, in response to a user selecting a RFID reader type, using screen **652**, thereby allowing the user to (implicitly) associate a RFID format/protocol with the entered RFID.

As illustrated in **Fig. 6f**, for the embodiment, the user interface further includes screen **672** displaying a RFID and its details, including but not limited the intended RFID reader type, whether to be designated as the default RFID for use in emulating passive RFID. Request **674** may be displayed for example, among other situations, in response to a user selecting the "edit" option, using screen **622**, or on completion of designating a RFID as the default RFID for emulating passive transponders, using screen **662**

Operationally, as illustrated in **Fig. 7**, upon receipt of a request to launch the RFID function, support logic of the RFID feature **322** is loaded and given execution control, block **702**. Thereafter, support logic **322** waits for user inputs, block **704**.

On receipt of a user input/request, support logic **322** determines the nature of the input/request, block **706**, taking into the context, i.e. the portion of the user interface being displayed, and with which the user just interacted in submitting the input/request.

As illustrated, on determining that the user has requested a current display list to be scrolled (e.g. RFID list **614** of screen **612**), support logic **322** causes the list to be scrolled as requested. Thereafter, support logic **322** returns to block **708** and waits for further input.

Similarly, on determining that the user has requested a selected RFID to be sent (emulating output of the RFID by an active RFID transponder), support logic **322** causes the RFID to be outputted in a form of an appropriate RF signal (in accordance with the associated intended RFID reader type). Thereafter, support logic **322** again returns to block **710** and waits for further input.

On determining that the user has requested a list of options to be displayed (e.g. selection of "option" **616** of screen **612**), support logic **322** causes the list of options to be displayed as requested. Thereafter, support logic **322** returns to block **712** and waits for further input.

On determining that the user has requested to add a RFID (e.g. selection of "Add" of screen **622**), support logic **322** facilitates addition of a RFID (e.g. successively guiding user entry of a RFID using screens **632-662**. Thereafter, support logic **322** returns to block **714** and waits for further input.

These are a few examples of user inputs/requests support logic **322** may support. The present invention contemplates other user inputs/requests may also be supported, and handled accordingly, block **716.**

Conclusion and Epilogue

Thus, it can be seen from the above descriptions, a novel emulated RFID input method, using a mobile communication device, has been described. The present invention advantageously improved the ease of use for a user to provide data captured in a device to another system, especially for data captured in e.g. a mobile device.

While the present invention has been described in terms of the earlier described embodiments, those skilled in the art will recognize that the invention is not limited to the embodiments described. The present invention can be practiced with modification and alteration within the spirit and scope of the appended claims. Thus, the description is to be regarded as illustrative instead of restrictive on the present invention.

CLAIMS

What is claimed is:

1. A method for providing a radio frequency identification (RFID) comprising:

facilitating a user in providing an instruction to a mobile communication device to output a first data in a form of a first radio frequency signal to emulate output of the first data by an active RFID transponder, the mobile communication device being also equipped to facilitate a user in communicating with a user of another communication device, with the communication being facilitated at least in part over a wireless network; and

in response, outputting the first data in the form of a radio frequency signal, emulating output of the first data by an active RFID transponder as instructed by the user.

2. The method of claim 1, wherein said first data comprises a selected one of a security key and an identifier.

3. The method of claim 2, wherein said first data comprises a security key, and said security key comprises a door key.

4. The method of claim 3, wherein said door key comprises a selected one of a garage door key, an exterior door key, an interior door key, and a motor vehicle door key.

5. The method of claim 2, wherein said first data comprises an identifier, and said identifier comprises a selected one of a social security number, a driver's license number, an affinity program account number, and a credit card number.

6. The method of claim 1, wherein the method further comprises facilitating the user in selecting the first data from a plurality of data using the mobile communication device.

7. The method of claim 1, wherein the method further comprises facilitating provision of the first data to the mobile communication device.

8. The method of claim 7, wherein said facilitating of the provisioning of the data to the mobile communication device, including facilitating provision of at least a signaling attribute associated with the outputting of the data in the form of a radio frequency signal.

9. The method of claim 1, wherein the method further comprises

detecting for proximal presence of a RFID reader by the mobile communication device; and

on detection, outputting a second data in a form of a second radio frequency signal, using the mobile communication device, emulating output of the second data by a passive RFID transponder.

10. The method of claim 9, wherein said detecting comprises sensing for a probing radio frequency signal of the RFID reader by the mobile communication device.

11. The method of claim 9, wherein said first and second data are the same data.

12. The method of claim 1, wherein the mobile communication device is a selected one of a wireless mobile phone and a personal digital assistant equipped with communication capability.

13. A method for providing a radio frequency identifier (RFID), comprising:

detecting for proximal presence of a RFID reader by a mobile communication device, the mobile communication device being also equipped to facilitate a user in communicating with a user of another communication device, with the communication being facilitated at least in part over a wireless network; and

on detection, outputting a data in a form of a radio frequency signal, using the mobile communication device, emulating output of the data by a passive RFID transponder.

14. The method of claim 13, wherein said detecting comprises sensing for a probing radio frequency signal of the RFID reader by the mobile communication device.

15. The method of claim 13, wherein said data comprises a security key.

16. The method of claim 15, wherein said security key comprises a door key.

17. The method of claim 16, wherein said door key comprises a selected one of a garage door key, an exterior door key, an interior door key, and a motor vehicle door key.

18. The method of claim 13, wherein the method further comprises facilitating provision of the data to the mobile communication device.

19. The method of claim 18, wherein said facilitating of the provisioning of the data to the mobile communication device, including facilitating provision of at least a signaling attribute associated with the outputting of the data in the form of a radio frequency signal.

20. The method of claim 13, wherein the mobile communication device is a selected of a wireless mobile phone and a personal digital assistant equipped with communication capability.

21. A mobile communication device comprising:

a transmitter to transmit a radio frequency signal;

a storage medium to store a first data and instructions to operate the transmitter to selectively (a) output the first data in a form of a radio frequency signal, in response to a user instruction, emulating output of the first data by an active radio

frequency identifier (RFID) transponder, and (b) facilitate a user to communicate with another user of another communication device, with the communication being facilitated at least in part over a wireless network; and

a processor coupled to the transmitter and the storage to execute the instructions.

22. The device of claim 21, wherein said first data comprises a selected one of a security key and an identifier.

23. The device of claim 22, wherein said first data comprises a security key, and said security key comprises a door key.

24. The device of claim 23, wherein said door key comprises a selected one of a garage door key, an exterior door key, an interior door key, and a motor vehicle door key.

25. The device of claim 22, wherein said first data comprises an identifier, and said identifier comprises a selected one of a social security number, a driver's license number, an affinity program account number, and a credit card number.

26. The device of claim 21, wherein the instructions are further designed to facilitate the user in selecting the first data from a plurality of data, and instructing said output.

27. The device of claim 21, wherein the instructions are further designed to facilitate provision of the first data to the mobile communication device.

28. The device of claim 27, wherein the instructions are further designed to include with said facilitating, provisioning of at least a signaling attribute associated with the outputting of the first data in the form of a radio frequency signal.

29. The device of claim 21, wherein the instructions are further designed to detect for proximal presence of a RFID reader; and

on detection, outputting a second data in a form of a second radio frequency signal, emulating output of the second data by a passive RFID transponder.

30. The device of claim 29, wherein the instructions are further designed to sense for a probing radio frequency signal of the RFID reader.

31. The device of claim 29, wherein said first and second data are the same data.

32. The device of claim 21, wherein the mobile communication device is a selected of a wireless mobile phone and a personal digital assistant equipped with communication capability.

33. A mobile communication device comprising:

a transmitter to transmit a radio frequency signal;

a storage medium to store a first data and instructions to operate the transmitter to selectively (a) detect for proximal presence of a radio frequency identifier (RFID) reader, and on detection, output a data in a form of a radio frequency signal, emulating output of the data by a passive RFID transponder, and (b) facilitate a user to communicate with another user of another communication device, with the communication being facilitated at least in part over a wireless network; and

a processor coupled to the transmitter and the storage to execute the instructions.

34. The device of claim 33, wherein said instructions are further designed to sense for a probing radio frequency signal of the RFID reader.

35. The device of claim 33, wherein said data comprises a security key.

36. The device of claim 35, wherein said security key comprises a door key.

37. The device of claim 36, wherein said door key comprises a selected one of a garage door key, an exterior door key, an interior door key, and a motor vehicle door key.

38. The device of claim 33, wherein the instructions are further designed to facilitate provision of the data to the mobile communication device.

39. The device of claim 38, wherein the instructions are further designed to include with said facilitating, provisioning of at least a signaling attribute associated with the outputting of the data in the form of a radio frequency signal.

40. The device of claim 33, wherein the mobile communication device is a selected of a wireless mobile phone and a personal digital assistant equipped with communication capability.

41. A cover comprising:

a body designed to be mated with a mobile communication device equipped to facilitate a user to communicate with another user of another communication device, with the communication being facilitated at least in part over a wireless network; and

a storage medium embedded in said body, to store a selected one of a plurality of instructions and one or more locations to obtain all or a part of said instructions, the instructions being designed to operate a transmitter of the mobile communication device to output a first data in a form of a radio frequency signal, in response to a user instruction, emulating output of the first data by an active radio frequency identifier (RFID) transponder, using the mobile communication device.

42. The cover of claim 41, wherein said first data comprises a selected one of a security key and an identifier.

43. The cover of claim 42, wherein said first data comprises a security key, and said security key comprises a door key.

44. The cover of claim 43, wherein said door key comprises a selected one of a garage door key, an exterior door key, an interior door key, and a motor vehicle door key.

45. The cover of claim 42, wherein said first data comprises an identifier, and said identifier comprises a selected one of a social security number, a driver's license number, an affinity program account number, and a credit card number.

46. The cover of claim 41, wherein the instructions are further designed to facilitate the user in selecting the first data from a plurality of data, and instructing said output.

47. The cover of claim 41, wherein the instructions are further designed to facilitate provision of the first data to the mobile communication device.

48. The cover of claim 47, wherein the instructions are further designed to include with said facilitating, provisioning of at least a signaling attribute associated with the outputting of the first data in the form of a radio frequency signal.

49. The cover of claim 41, wherein the instructions are further designed to
detect for proximal presence of a RFID reader; and
on detection, outputting a second data in a form of a second radio frequency signal, emulating output of the second data by a passive RFID transponder.

50. The cover of claim 49, wherein the instructions are further designed to sense for a probing radio frequency signal of the RFID reader.

51. The cover of claim 49, wherein said first and second data are the same data.

52. The cover of claim 41, wherein the cover is an accessory cover to be adorned by the mobile communication device.

53. A cover comprising:

a body designed to be mated with a mobile communication device equipped to facilitate a user to communicate with another user of another communication device, with the communication being facilitated at least in part over a wireless network; and

a storage medium embedded in said body, to store a selected one of a plurality of instructions and one or more locations to obtain all or a part of said instructions, the instructions being designed to operate the transmitter to detect for proximal presence of a radio frequency identifier (RFID) reader, and on detection, output a data in a form of a radio frequency signal, emulating output of the data by a passive RFID transponder, using the mobile communication device.

54. The cover of claim 53, wherein said instructions are further designed to sense for a probing radio frequency signal of the RFID reader.

55. The cover of claim 53, wherein said data comprises a security key.

56. The cover of claim 55, wherein said security key comprises a door key.

57. The cover of claim 56, wherein said door key comprises a selected one of a garage door key, an exterior door key, an interior door key, and a motor vehicle door key.

58. The cover of claim 53, wherein the instructions are further designed to facilitate provision of the data to the mobile communication device.

59. The cover of claim 58, wherein the instructions are further designed to include with said facilitating, provisioning of at least a signaling attribute associated with the outputting of the data in the form of a radio frequency signal.

60. The cover of claim 53, wherein the cover is an accessory cover to be adorned by the mobile communication device.

(12) INTERNATIONAL APPLICATION PUBLISHED UNDER THE PATENT COOPERATION TREATY (PCT)

(19) World Intellectual Property Organization
International Bureau

(43) International Publication Date
29 December 2004 (29.12.2004)

PCT

(10) International Publication Number
WO 2004/114239 A2

(51) International Patent Classification[7]: G08B

(21) International Application Number: PCT/US2004/018397

(22) International Filing Date: 10 June 2004 (10.06.2004)

(25) Filing Language: English

(26) Publication Language: English

(30) Priority Data:
60/478,245 13 June 2003 (13.06.2003) US

(71) Applicant *(for all designated States except US)*: **WILDSEED LTD.** [US/US]; 10210 NE Points Drive, Suite 300, Kirkland, WA 98033 (US).

(72) Inventors; and

(75) Inventors/Applicants *(for US only)*: **ZATLOUKAL, Peter** [US/US]; 218 Main Street #480, Kirkland, WA 98033 (US). **ENGSTROM, Eric, G.** [US/US]; 12415 Holmes Pt. Dr. NE, Kirkland, WA 98033 (US). **SMITH, Cindy, M.** [CA/US]; 218 Main Street #673, Kirkland, WA 98033 (US).

(74) Agents: **AUYEUNG, Aloysius** et al.; Schwabe, Williamson & Wyatt, P.C., Pacwest Center, Stes. 1600-1900, 1211 SW Fifth Avenue, Portland, OR 97204-3795 (US).

(81) Designated States *(unless otherwise indicated, for every kind of national protection available)*: AE, AG, AL, AM, AT, AU, AZ, BA, BB, BG, BR, BW, BY, BZ, CA, CH, CN, CO, CR, CU, CZ, DE, DK, DM, DZ, EC, EE, EG, ES, FI, GB, GD, GE, GH, GM, HR, HU, ID, IL, IN, IS, JP, KE, KG, KP, KR, KZ, LC, LK, LR, LS, LT, LU, LV, MA, MD, MG, MK, MN, MW, MX, MZ, NA, NI, NO, NZ, OM, PG, PH, PL, PT, RO, RU, SC, SD, SE, SG, SK, SL, SY, TJ, TM, TN, TR, TT, TZ, UA, UG, US, UZ, VC, VN, YU, ZA, ZM, ZW.

(84) Designated States *(unless otherwise indicated, for every kind of regional protection available)*: ARIPO (BW, GH, GM, KE, LS, MW, MZ, NA, SD, SL, SZ, TZ, UG, ZM, ZW), Eurasian (AM, AZ, BY, KG, KZ, MD, RU, TJ, TM), European (AT, BE, BG, CH, CY, CZ, DE, DK, EE, ES, FI, FR, GB, GR, HU, IE, IT, LU, MC, NL, PL, PT, RO, SE, SI, SK, TR), OAPI (BF, BJ, CF, CG, CI, CM, GA, GN, GQ, GW, ML, MR, NE, SN, TD, TG).

Declaration under Rule 4.17:
— *of inventorship (Rule 4.17(iv)) for US only*

Published:
— *without international search report and to be republished upon receipt of that report*

[Continued on next page]

(54) Title: EMULATED RADIO FREQUENCY IDENTIFICATION

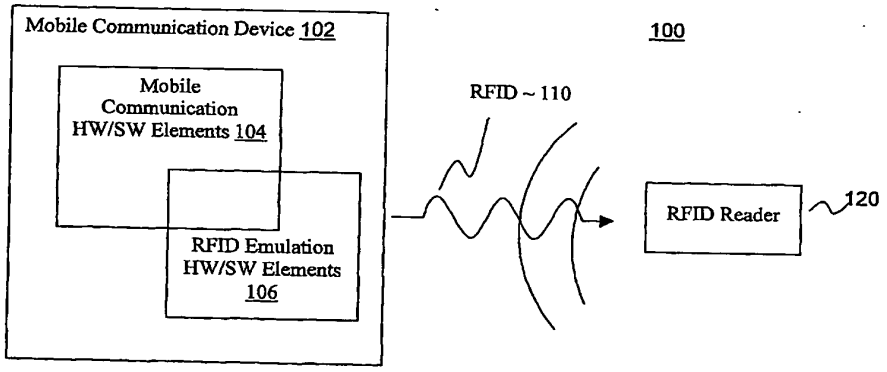

(57) Abstract: A mobile communication device is equipped with hardware and/or software components to enable the device to output a data in a form of a radio frequency signal, emulating outputting of the data by either an active or a passive RFID transponder. The data may be a security key or an identifier. Emulation of an active RFID transponder includes facilitating selection of the data and instruction to output by a user. Emulation of a passive RFID transponder includes detecting for proximal presence of a RFID reader. Either case, provision of the data to the mobile communication device may include provision of associated signal attribute(s).

WO 2004/114239 A2

For two-letter codes and other abbreviations, refer to the "Guidance Notes on Codes and Abbreviations" appearing at the beginning of each regular issue of the PCT Gazette.

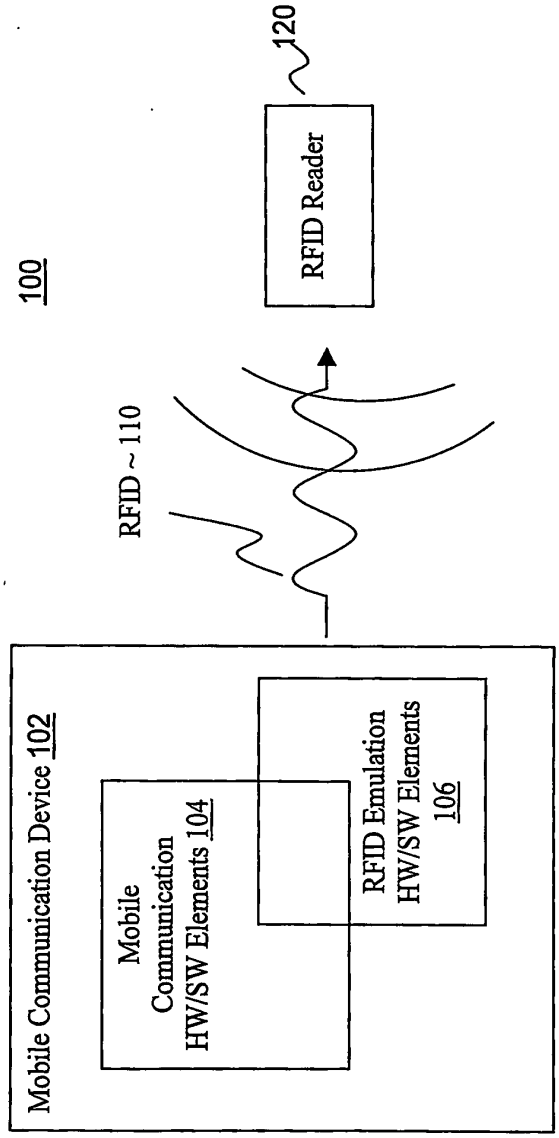
100
Mobile Communication Device 102
Mobile Communication HW/SW Elements 104
RFID Emulation HW/SW Elements 106
RFID ~ 110
120
RFID Reader

Figure 1

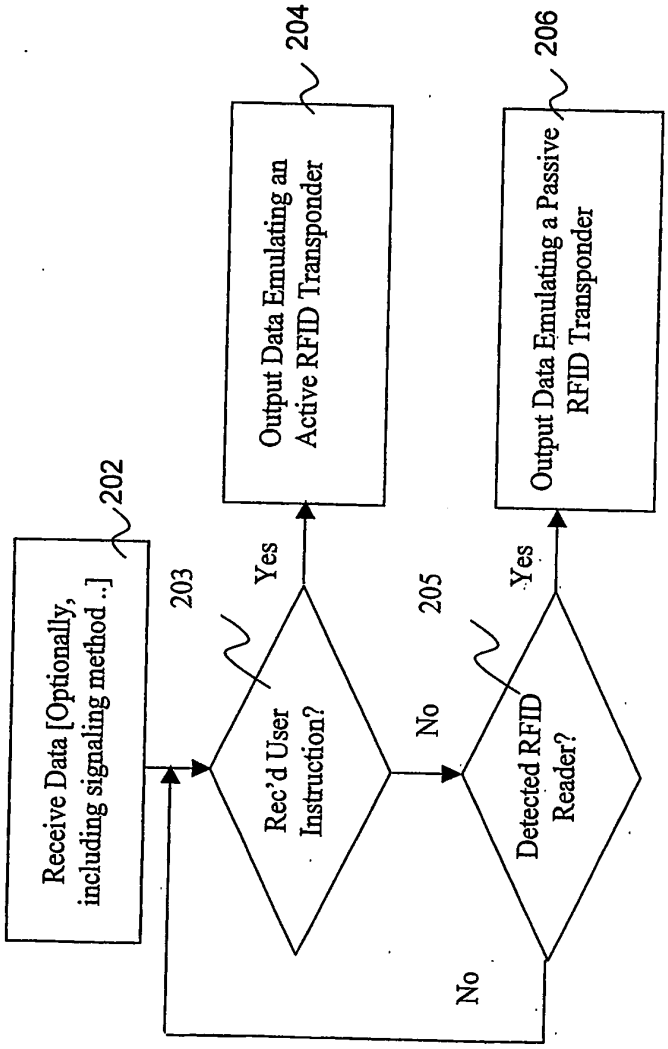
Receive Data [Optionally, including signaling method ..]
202
Rec'd User Instruction?
203
Yes
No
Output Data Emulating an Active RFID Transponder
204
Detected RFID Reader?
205
Yes
No
Output Data Emulating a Passive RFID Transponder
206

Figure 2

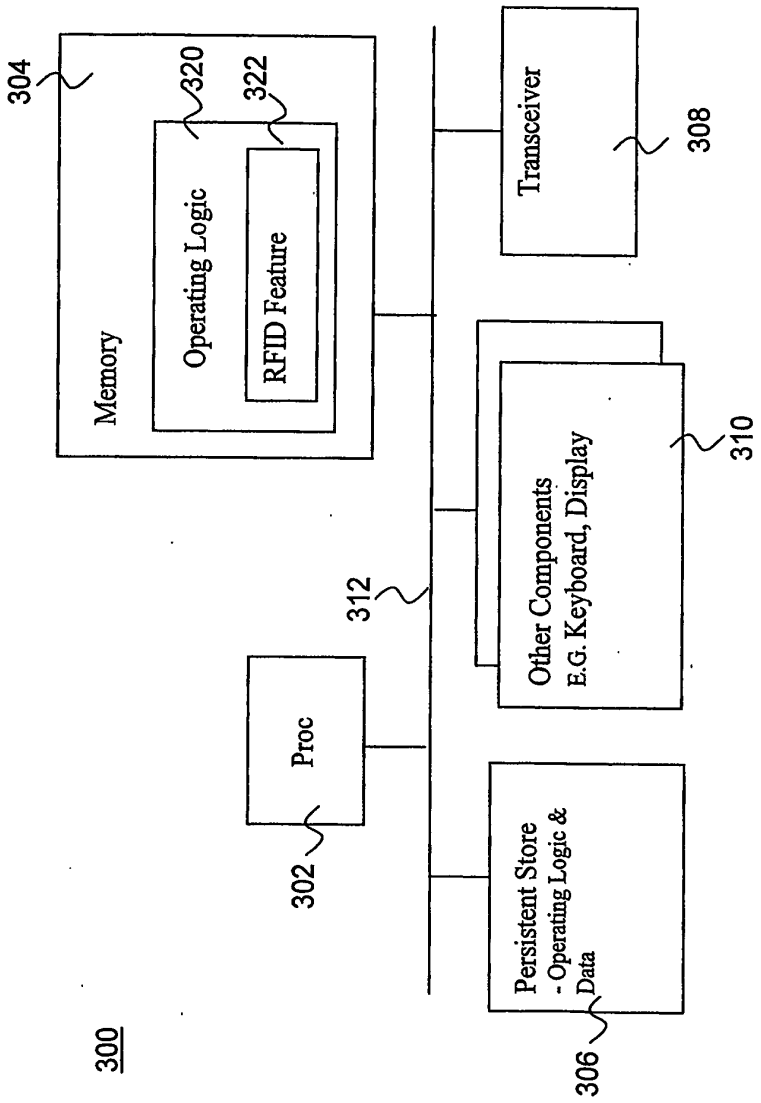
300
304
Memory
320
Operating Logic
322
RFID Feature
302
Proc
312
306
Persistent Store
- Operating Logic &
Data
310
Other Components
E.G. Keyboard, Display
308
Transceiver

Figure 3

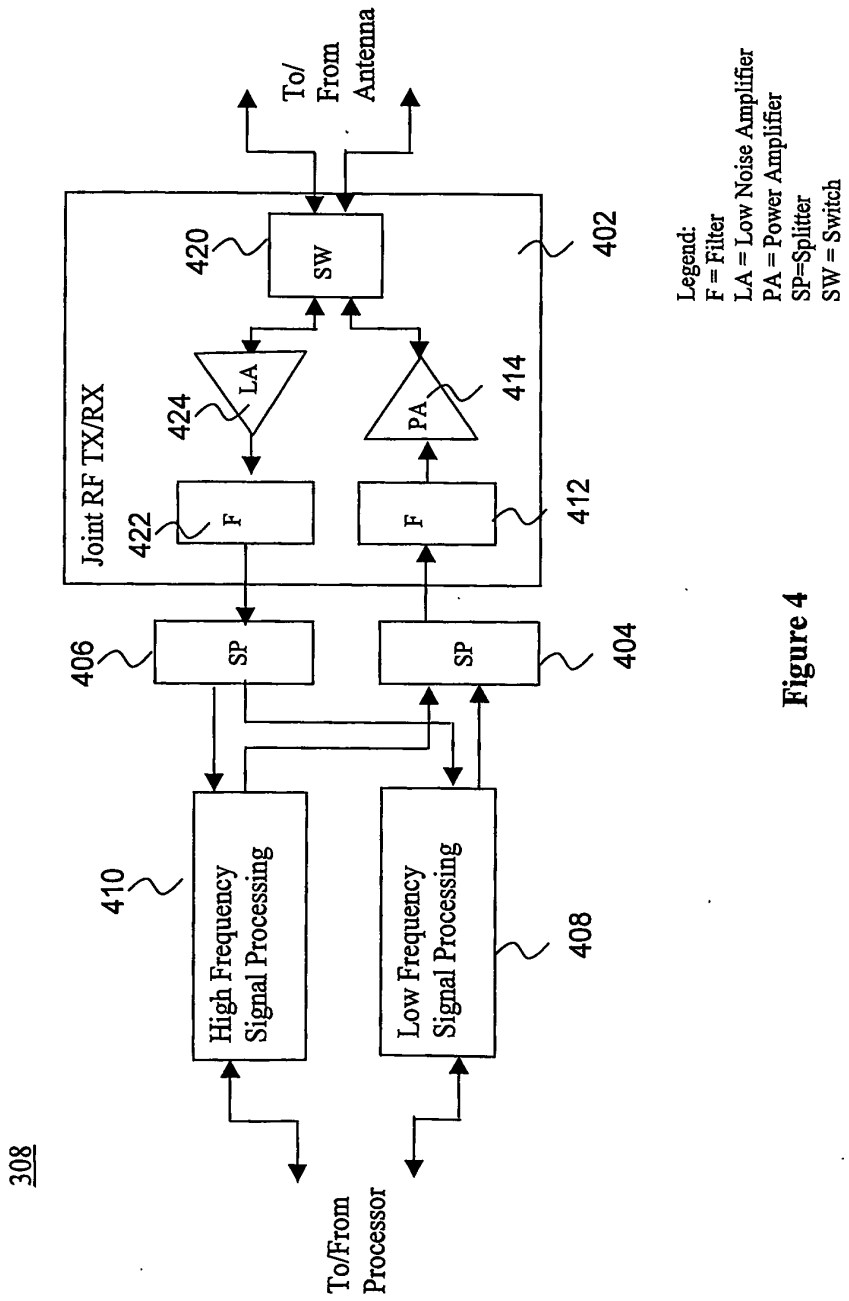
308
To/From Processor
High Frequency Signal Processing
410
Low Frequency Signal Processing
408
SP
406
SP
404
Joint RF TX/RX
F
422
LA
424
F
412
PA
414
SW
420
402
To/ From Antenna
Legend:
F = Filter
LA = Low Noise Amplifier
PA = Power Amplifier
SP=Splitter
SW = Switch

Figure 4

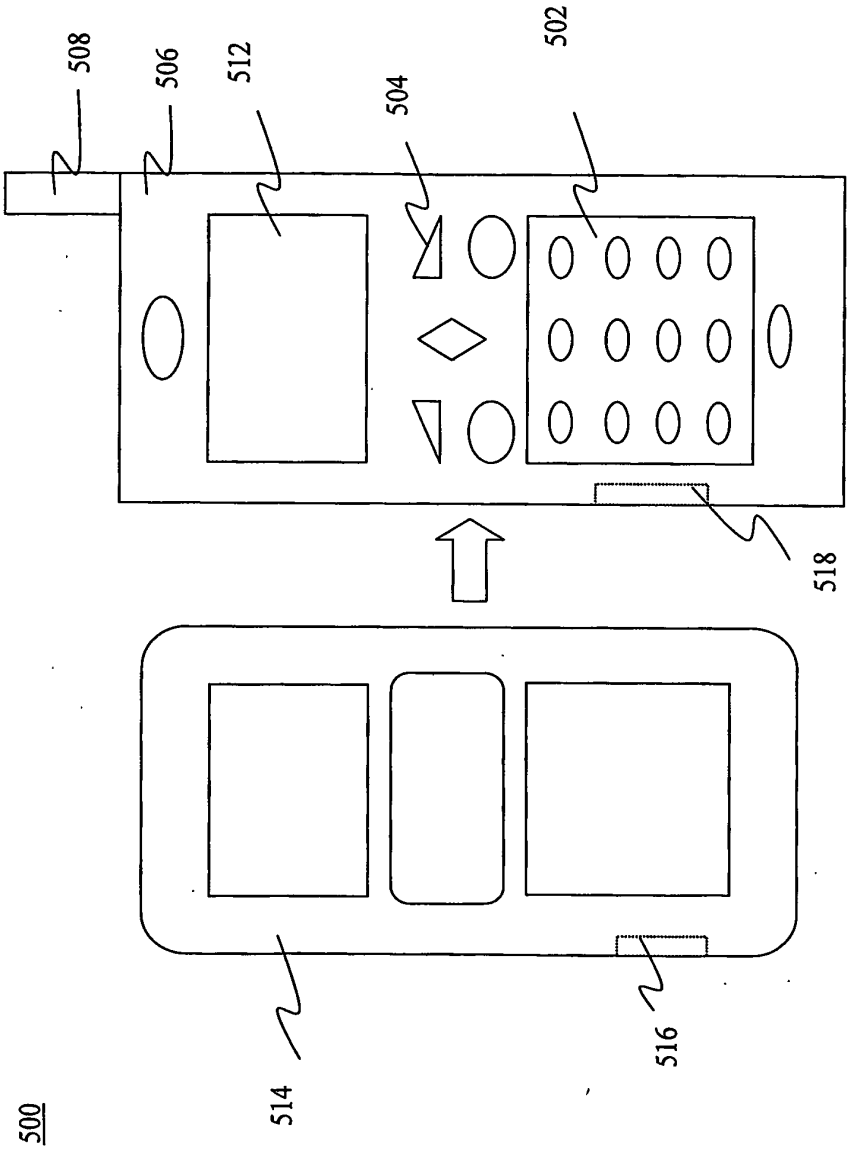

Figure 5a

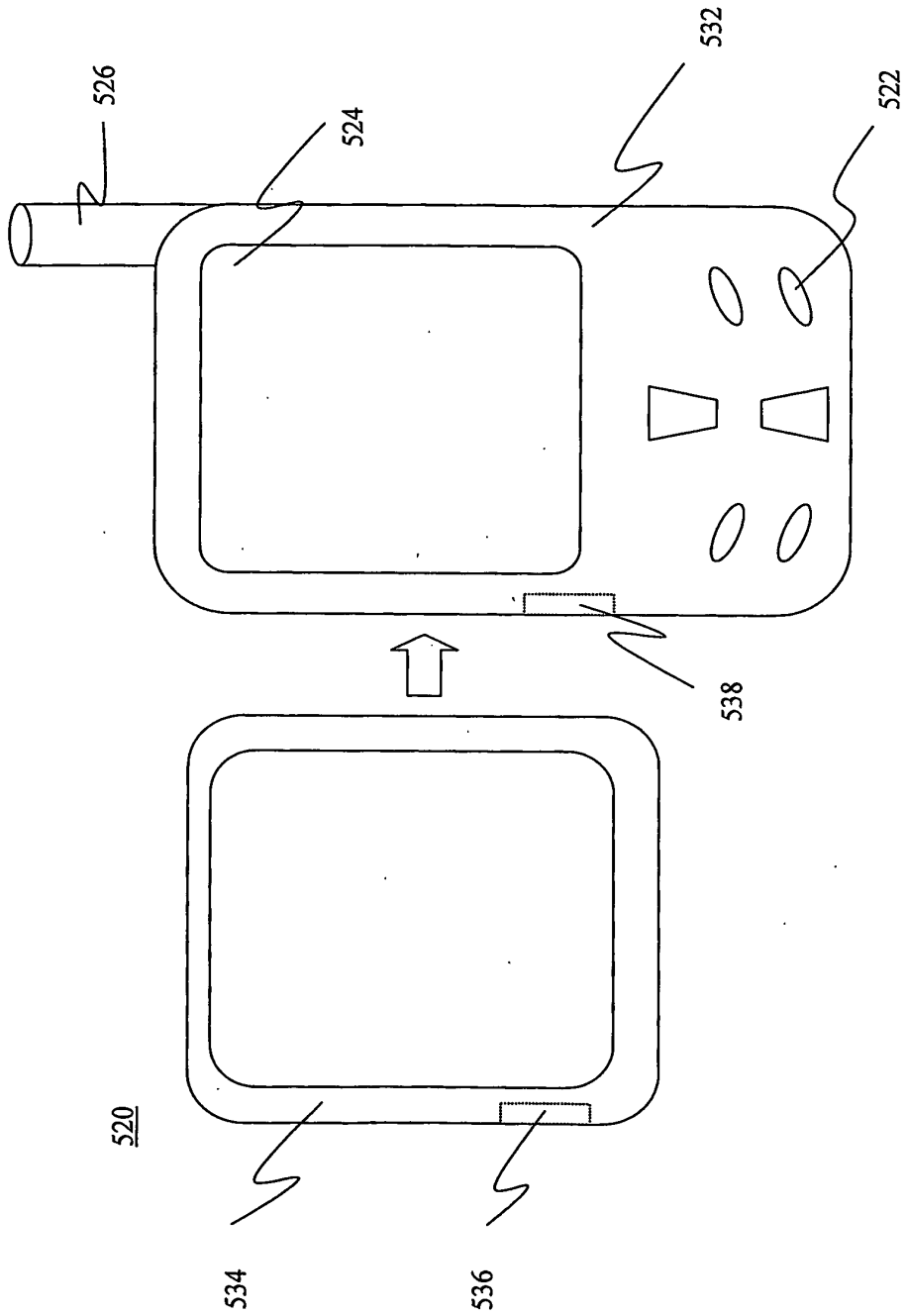

Figure 5b

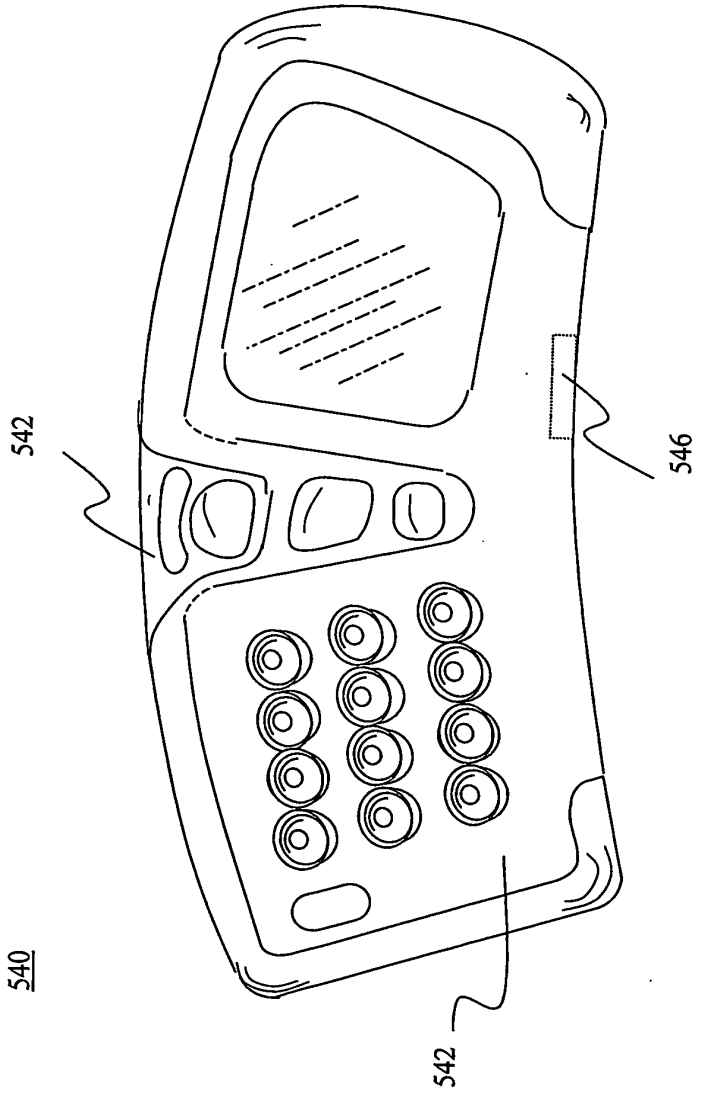

Figure 5c

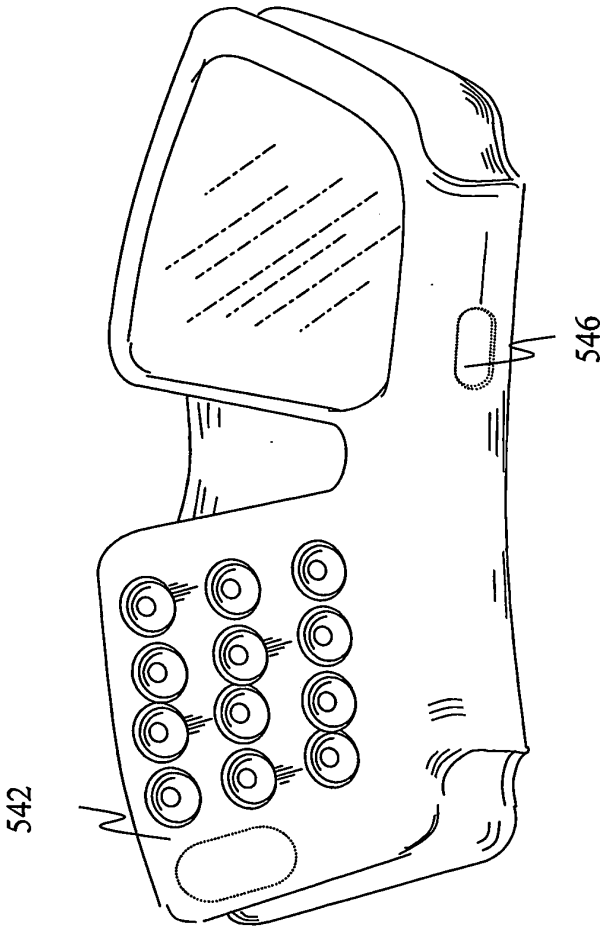

Figure 5d

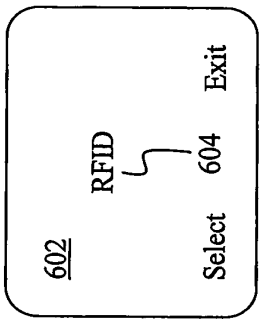

Figure 6a

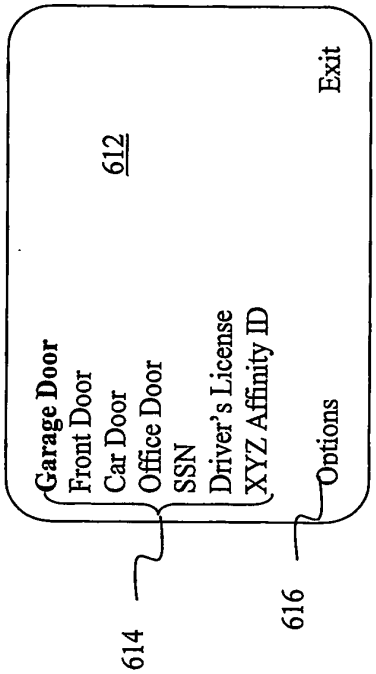

Figure 6b

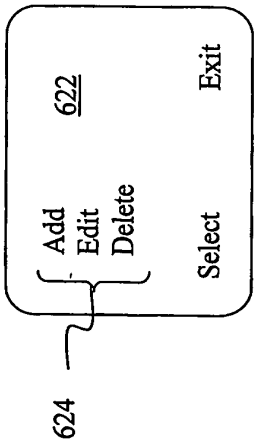

Figure 6c

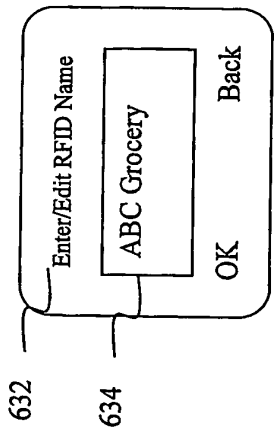

Figure 6d

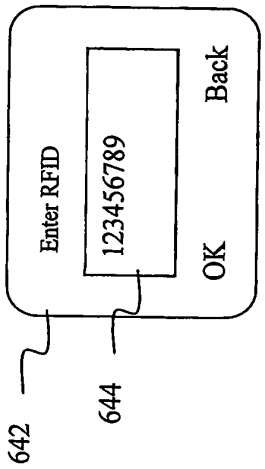

Figure 6e

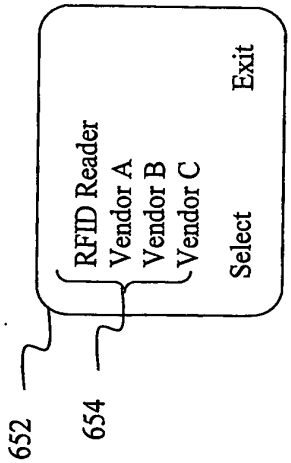

Figure 6f

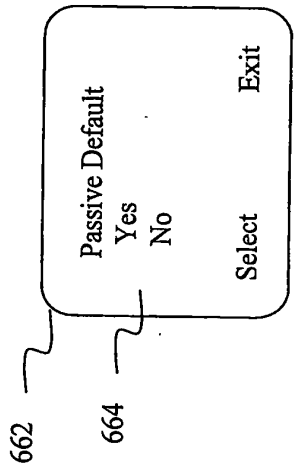

Figure 6g

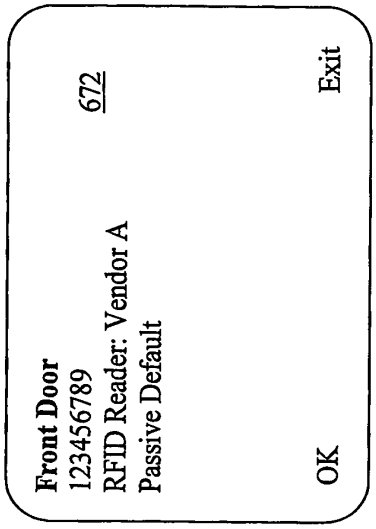
Front Door
123456789
RFID Reader: Vendor A
Passive Default
672
OK
Exit

Figure 6h

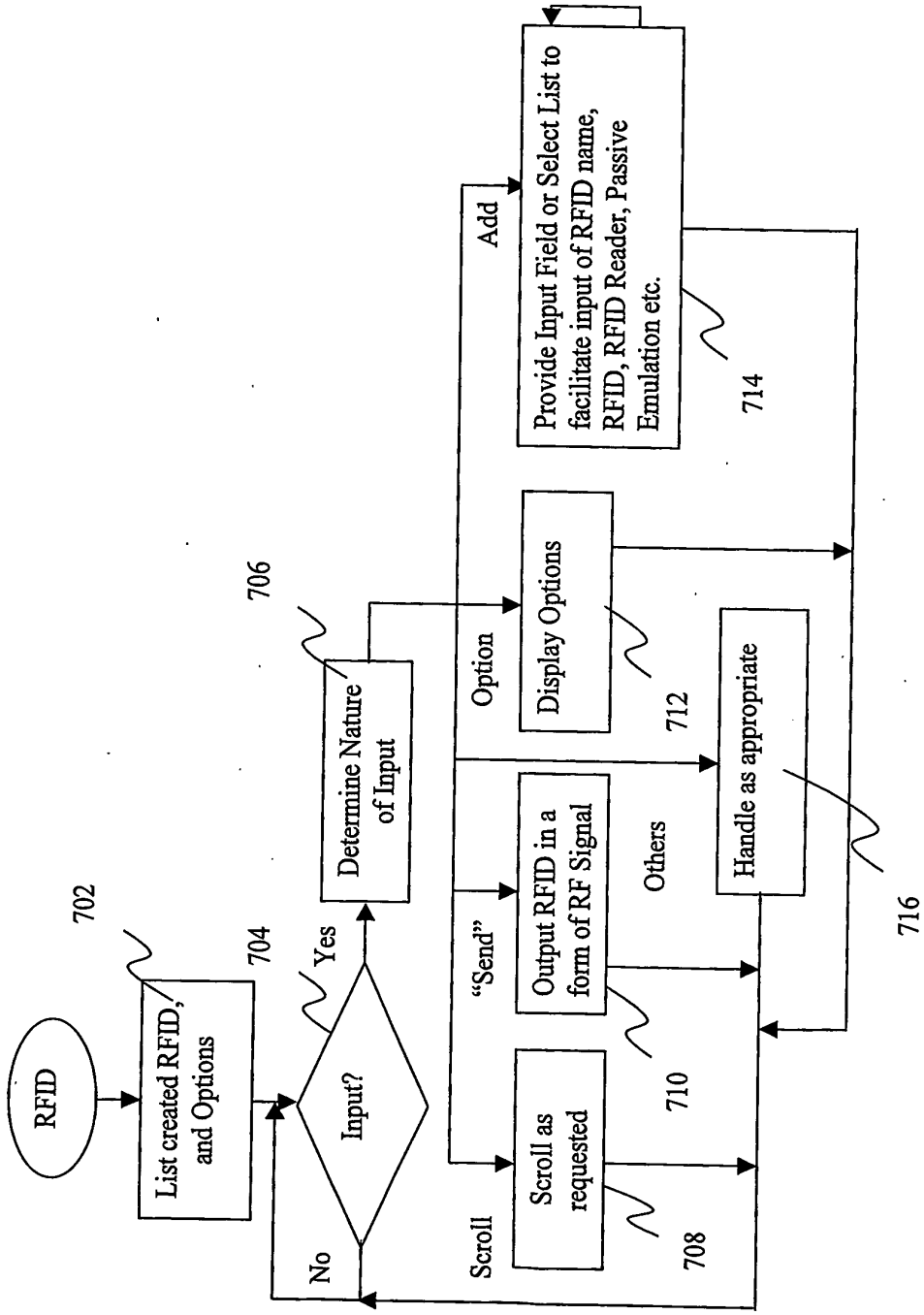
RFID
List created RFID, and Options
702
Input?
704
Yes
No
Determine Nature of Input
706
Scroll
Scroll as requested
708
"Send"
Output RFID in a form of RF Signal
710
Option
Display Options
712
Add
Provide Input Field or Select List to facilitate input of RFID name, RFID, RFID Reader, Passive Emulation etc.
714
Others
Handle as appropriate
716

Figure 7

Box No. VIII (iv) DECLARATION: INVENTORSHIP (only for the purposes of the designation of the United States of America)
The declaration must conform to the following standardized wording provided for in Section 214; see Notes to Boxes Nos. VIII, VIII (i) to (v) (in general) and the specific Notes to Box No. VIII (iv). If this Box is not used, this sheet should not be included in the request.

Declaration of inventorship (Rules 4.17(iv) and 51*bis*.1(a)(iv)) for the purposes of the designation of the United States of America:

I hereby declare that I believe I am the original, first and sole (if only one inventor is listed below) or joint (if more than one inventor is listed below) inventor of the subject matter which is claimed and for which a patent is sought.

This declaration is directed to the international application of which it forms a part (if filing declaration with application).

This declaration is directed to international application No. PCT/..... (if furnishing declaration pursuant to Rule 26*ter*).

I hereby declare that my residence, mailing address, and citizenship are as stated next to my name.

I hereby state that I have reviewed and understand the contents of the above-identified international application, including the claims of said application. I have identified in the request of said application, in compliance with PCT Rule 4.10, any claim to foreign priority, and I have identified below, under the heading "Prior Applications," by application number, country or Member of the World Trade Organization, day, month and year of filing, any application for a patent or inventor's certificate filed in a country other than the United States of America, including any PCT international application designating at least one country other than the United States of America, having a filing date before that of the application on which foreign priority is claimed.

Prior Applications: .....

I hereby acknowledge the duty to disclose information that is known by me to be material to patentability as defined by 37 C.F.R. § 1.56, including for continuation-in-part applications, material information which became available between the filing date of the prior application and the PCT international filing date of the continuation-in-part application.

I hereby declare that all statements made herein of my own knowledge are true and that all statements made on information and belief are believed to be true; and further that these statements were made with the knowledge that willful false statements and the like so made are punishable by fine or imprisonment, or both, under Section 1001 of Title 18 of the United States Code and that such willful false statements may jeopardize the validity of the application or any patent issued thereon.

Name: Peter Zatloukal

Residence: Kirkland, Washington
(city and either US state, if applicable, or country)

Mailing Address: 218 Main Street #480, Kirkland, WA 98033

Citizenship: US

Inventor's Signature: ..... Date: June 8, 2004
(if not contained in the request, or if declaration is corrected or added under Rule 26*ter* after the filing of the international application. The signature must be that of the inventor, not that of the agent) (of signature which is not contained in the request, or of the declaration that is corrected or added under Rule 26*ter* after the filing of the international application)

Name: G. Eric Engstrom

Residence: Kirkland, Washington
(city and either US state, if applicable, or country)

Mailing Address: 12415 Holmes Pt. Dr. NE, Kirkland, WA 98033

Citizenship: US

Inventor's Signature: ..... Date: June 8, 2004
(if not contained in the request, or if declaration is corrected or added under Rule 26*ter* after the filing of the international application. The signature must be that of the inventor, not that of the agent) (of signature which is not contained in the request, or of the declaration that is corrected or added under Rule 26*ter* after the filing of the international application)

☒ This declaration is continued on the following sheet, "Continuation of Box No. VIII (iv)".

Continuation of Box No. VIII (i) to (v) DECLARATION

If the space is insufficient in any of Boxes Nos. VIII (i) to (v) to furnish all the information, including in the case where more than two inventors are to be named in Box No. VIII (iv), in such case, write "Continuation of Box No. VIII ..." (indicate the item number of the Box) and furnish the information in the same manner as required for the purposes of the Box in which the space was insufficient. If additional space is needed in respect of two or more declarations, a separate continuation box must be used for each such declaration. If this Box is not used, this sheet should not be included in the request.

Continuation of Box No. VIII (iv)

Name: Cindy M. Smith

Residence: Kirkland, Washington

Mailing Address: 218 Main Street #673
Kirkland, WA 98033

Citizenship: Canada

Inventor's Signature: CMSmith

Date: June 8, 2004

UNITED STATES NATIONAL STAGE SHEET (DO/EO)
Karen Williams, Paralegal

PUBLICATION NO. WO 04/114239

PUBLICATION DATE 29 DEC 04

U. S. APPL. NO. 10/560262

INTERNATIONAL APPL. US04/18397

Application Filed By: 30 MOS

International Application ✓ Translation ___ Defective ___ Reason ___

WIPO Designated US Elected ___ IA Language ENGLISH

Copy of Search Report (ISR) ✓ Article 33 ___ Article 19 ___

371 Filing fees ✓ paid ___ insufficient

Total Claims 40 Chargeable 40 Independent 4 Multiple N

Total Drawing Sheets 12 Defective ___ Reason ___

Oath/Declaration needed ___ signed ✓ defective ___ Reason RULE 4.17

Small entity ___ Large entity ✓ Small entity statement ___

Biochemical Seq. Diskette ___ needed ___ damaged ___ entered ___ not entered ___

Biochemical Sequence listing ___ needed ___ statement ___ no statement ___

Copy of References Cited in ISR ___ IB/331 ___

Copy of IPER ___ Annexes ___ entered ___ not entered ___ Reason ___

Preliminary Amendments ✓ entered ___ not entered Reason ___

Information Disclosure Statement 23 FEB 06 Request for Immediate Examination ___

Substitute Specification ___ Assignment ___ Priority document ✓

Power of Attorney ___ Data Sheet ___ RO/101 ___ PCT Easy ___

Other papers ___

35 USC Receipt of Request 09 DEC 05
Date completion USC 371 Requirements 09 DEC 05
Notice of Missing Requirements ___
Notice of Defective ___ Response ___ Translation ___ Declaration ___ Disk ___
Notice of Acceptance 28 FEB 06
Notice of Abandonment ___
Notice of Missing Sequence ___

BEST AVAILABLE COPY

PATENT APPLICATION FEE DETERMINATION RECORD

Effective December 8, 2004

Application or Docket Number: 10/560262

CLAIMS AS FILED - PART I

	(Column 1)	(Column 2)	SMALL ENTITY TYPE ☐ RATE	FEE	OR	OTHER THAN SMALL ENTITY RATE	FEE
U.S. NATIONAL STAGE FEES	40						
BASIC FEE	SMALL ENT. = $ 150	LARGE ENT. = $ 300	BASIC FEE		OR	BASIC FEE	300
EXAMINATION FEE	Satisfies PCT Article 33(1)-(4) = $ 50 / $ 100	All other situations = $ 100 / $ 200	EXAM. FEE			EXAM. FEE	200
SEARCH FEE	U.S. is ISA = $ 50 / $ 100 ALL other countries = $ 200 / $ 400	ALL other situations = $ 250 / $ 500	SEARCH FEE			SEARCH FEE	100
FEE FOR EXTRA SPEC. PGS.	minus 100 =	/ 50 =	X $ 125 =			X $ 250 =	
TOTAL CHARGEABLE CLAIMS	40 minus 20 =	* 20	X $ 25 =		OR	X $ 50 =	1000
INDEPENDENT CLAIMS	4 minus 3 =	* 1	X $ 100 =		OR	X $ 200 =	200
MULTIPLE DEPENDENT CLAIM PRESENT	N	☐	+ $ 180 =		OR	+ $ 360 =	
			TOTAL		OR	TOTAL	2100

* If the difference in column 1 is less than zero, enter "0" in column 2

CLAIMS AS AMENDED - PART II

		(Column 1) CLAIMS REMAINING AFTER AMENDMENT		(Column 2) HIGHEST NUMBER PREVIOUSLY PAID FOR	(Column 3) PRESENT EXTRA	SMALL ENTITY RATE	ADDI-TIONAL FEE	OR	OTHER THAN SMALL ENTITY RATE	ADDI-TIONAL FEE
AMENDMENT A	Total	*	Minus	**	=	X $ 25 =		OR	X $ 50 =	
	Independent	*	Minus	***	=	X $ 100 =		OR	X $ 200 =	
	FIRST PRESENTATION OF MULTIPLE DEPENDENT CLAIM				☐	+ $ 180 =		OR	+ $ 360 =	
						TOTAL ADDIT. FEE		OR	TOTAL ADDIT. FEE	

		(Column 1) CLAIMS REMAINING AFTER AMENDMENT		(Column 2) HIGHEST NUMBER PREVIOUSLY PAID FOR	(Column 3) PRESENT EXTRA	RATE	ADDI-TIONAL FEE	OR	RATE	ADDI-TIONAL FEE
AMENDMENT B	Total	*	Minus	**	=	X $ 25 =		OR	X $ 50 =	
	Independent	*	Minus	***	=	X $ 100 =		OR	X $ 200 =	
	FIRST PRESENTATION OF MULTIPLE DEPENDENT CLAIM				☐	+ $ 180 =		OR	+ $ 360 =	
						TOTAL ADDIT. FEE		OR	TOTAL ADDIT. FEE	

* If the entry in column 1 is less than the entry in column 2, write "0" in column 3.
** If the "Highest Number Previously Paid For" IN THIS SPACE is less than '20', enter "20".
*** If the "Highest Number Previously Paid For" IN THIS SPACE is less than '3', enter "3".
The "Highest Number Previously Paid For" (Total or Independent) is the highest number found in the appropriate box in column 1.

MULTIPLE DEPENDENT CLAIM FEE CALCULATION SHEET

(FOR USE WITH FORM PTO-875)

SERIAL NO. 10/560262

FILING DATE

APPLICANT(S)

CLAIMS

	AS FILED		AFTER 1st AMENDMENT		AFTER 2nd AMENDMENT	
	IND.	DEP.	IND.	DEP.	IND.	DEP.
1	1		1			
2						
3						
4						
5						
6						
7						
8						
9						
10						
11						
12						
13	1		1			
14						
15						
16						
17						
18						
19						
20						
21	1		1			
22						
23						
24						
25						
26						
27						
28						
29						
30						
31						
32						
33	1		1			
34						
35						
36						
37						
38						
39						
40						
41	1					
42						
43						
44						
45						
46						
47						
48						
49						
50						
TOTAL IND.			4			
TOTAL DEP.			36			
TOTAL CLAIMS			40			

	AS FILED		AFTER 1st AMENDMENT		AFTER 2nd AMENDMENT	
	IND.	DEP.	IND.	DEP.	IND.	DEP.
51						
52						
53	1					
54						
55						
56						
57						
58						
59						
60						
61						
62						
63						
64						
65						
66						
67						
68						
69						
70						
71						
72						
73						
74						
75						
76						
77						
78						
79						
80						
81						
82						
83						
84						
85						
86						
87						
88						
89						
90						
91						
92						
93						
94						
95						
96						
97						
98						
99						
100						
TOTAL IND.						
TOTAL DEP.						
TOTAL CLAIMS						

PTO - 1360 (REV. 11/04)

U.S. DEPARTMENT of COMMERCE
Patent and Trademark Office