US006771981B1

(12) **United States Patent**
Zalewski et al.

(10) **Patent No.: US 6,771,981 B1**
(45) **Date of Patent: Aug. 3, 2004**

(54) **ELECTRONIC DEVICE COVER WITH EMBEDDED RADIO FREQUENCY (RF) TRANSPONDER AND METHODS OF USING SAME**

(75) Inventors: **Thomas W. Zalewski**, Irving, TX (US); **Michael C Pennington**, Forney, TX (US); **Randall C. Roberts**, Double Oaks, TX (US); **Steven A. Shaw**, Irving, TX (US)

(73) Assignee: **Nokia Mobile Phones Ltd.**, Espoo (FI)

(*) Notice: Subject to any disclaimer, the term of this patent is extended or adjusted under 35 U.S.C. 154(b) by 508 days.

(21) Appl. No.: **09/675,618**

(22) Filed: **Sep. 29, 2000**

Related U.S. Application Data

(60) Provisional application No. 60/222,475, filed on Aug. 2, 2000.

(51) **Int. Cl.**[7] **H04B 1/38**; H04M 1/00

(52) **U.S. Cl.** **455/557**; 455/407; 455/558; 455/552.1; 455/575.1; 342/31

(58) **Field of Search** 455/405, 406, 455/407, 408, 412.1, 466, 557, 558, 92, 95, 575.8, 115.4, 100, 552.1; 342/51; 235/380; 705/41

(56) **References Cited**

U.S. PATENT DOCUMENTS

3,713,148 A	*	1/1973	Cardullo et al.	342/42
4,189,712 A		2/1980	Lemelson	
4,823,928 A		4/1989	Speas	
4,880,097 A		11/1989	Speas	
5,023,936 A		6/1991	Szczutkowski et al.	
5,053,774 A		10/1991	Schuermann et al.	
5,077,832 A		12/1991	Szczutkowski et al.	
5,138,650 A		8/1992	Stahl et al.	
5,220,593 A	*	6/1993	Zicker et al.	455/407
5,353,328 A	*	10/1994	Jokimies	455/558
5,359,182 A	*	10/1994	Schilling	235/380
5,382,952 A		1/1995	Miller	
5,453,747 A		9/1995	D'hont et al.	
5,488,376 A		1/1996	Hurta et al.	
5,489,773 A		2/1996	Kumar	
5,528,222 A		6/1996	Moskowitz et al.	
5,602,919 A		2/1997	Hurta et al.	
5,604,485 A		2/1997	Lauro et al.	
5,614,892 A		3/1997	Ward, II et al.	

(List continued on next page.)

FOREIGN PATENT DOCUMENTS

EP	0940783	9/1999
WO	WO 96/11452	4/1996
WO	WO 96/27170	9/1996
WO	WO 97/12414	4/1997
WO	WO 97/24698	7/1997
WO	WO 97/32423	9/1997
WO	WO 97/44912	11/1997
WO	WO 98/28831	7/1998
WO	WO 99/09525	2/1999

(List continued on next page.)

OTHER PUBLICATIONS

"Mobil Speedpass Warning Card"; User Manual.
"A Whitepaper"; BiStatix Technology; Motorola Inc.—Worldwide Smardcard Solutions Division.

(List continued on next page.)

Primary Examiner—Quochien B. Vuong
Assistant Examiner—Simon Nguyen
(74) *Attorney, Agent, or Firm*—Steven A. Shaw

(57) **ABSTRACT**

A changeable cover for an electronic device and method of using same in a payment system is provided. The cover has a transponder responsive to interrogation by an electric field. The cover provides an electronic identification number and other information in response to the interrogation signal. Also provided is a system for making payments, comprising at least one mobile station **(4)** which has an associated cover **(100)** for providing local data transfer. The system also comprises at least one point of sale terminal or the like, which has a second transceiver for providing data transfer.

15 Claims, 7 Drawing Sheets

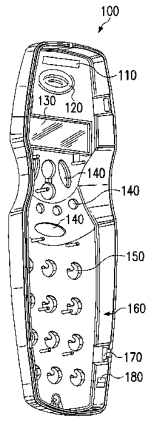

U.S. PATENT DOCUMENTS

5,710,886	A		1/1998	Christensen et al.	
5,719,918	A		2/1998	Serbetciouglu et al.	
5,727,153	A		3/1998	Powell	
5,729,697	A		3/1998	Schkolnick et al.	
5,748,737	A	*	5/1998	Daggar	705/41
5,768,370	A		6/1998	Maatta et al.	
5,787,174	A		7/1998	Tuttle	
5,805,676	A		9/1998	Martino	
5,819,234	A		10/1998	Slavin et al.	
5,845,259	A		12/1998	West et al.	
5,848,152	A		12/1998	Slipy et al.	
5,850,599	A		12/1998	Seiderman	
5,887,266	A		3/1999	Heinonen et al.	
5,909,176	A		6/1999	Schrott et al.	
5,933,086	A		8/1999	Tischendorf et al.	
5,942,985	A		8/1999	Chin	
5,943,624	A		8/1999	Fox et al.	
5,969,691	A		10/1999	Myers	
5,987,438	A		11/1999	Nakano et al.	
6,041,305	A		3/2000	Sakurai	
6,058,304	A		5/2000	Callaghan et al.	
6,073,840	A		6/2000	Marion	
6,075,971	A		6/2000	Williams et al.	
6,078,806	A		6/2000	Heinonen et al.	
6,078,820	A		6/2000	Wells et al.	
6,107,920	A		8/2000	Eberhardt et al.	
6,107,934	A		8/2000	Andreou et al.	
6,169,890	B1	*	1/2001	Vatanen	455/406
6,232,870	B1		5/2001	Garber et al.	

FOREIGN PATENT DOCUMENTS

WO	WO 99/53457	10/1999
WO	WO 00/10144	2/2000
WO	WO 00/16285	3/2000
WO	WO 00/21032	4/2000
WO	WO 00/26838	5/2000
WO	WO 00/26856	5/2000
WO	WO 00/34931	6/2000
WO	WO 00/38340	6/2000
WO	WO 00/74406	12/2000
WO	WO 01/03040	1/2001

OTHER PUBLICATIONS

"C–Stores Advance Technology"; E–Payments 2000; pp 12A & 13A; Jun. 1999.

"From Present to Future. Or: Why the SkiData ticket technology is a secure future investment."; SkiData AG–EventAccess–Ticket Technologies; Jul. 13, 2000; pp 1,2; http://www.skidata.com/English/Event/Tickets.asp.

"From Selling to Charging. Or: How to integrate technological highlights with SkiData components."; SkiData AG–Access Components–From selling to charging; Jul. 13, 2000; pp 1,2; http://www.skidata.com/English Components/KevDetector.asp.

"RFID: The retail revolution"; Checkpoint Systems—RFID Products; Jul. 21, 2000; pp 1 of 1; http://www.checkpoint-systems.com/rfid/products.html.

Maney, K.; "High–tech tags mean days of bar codes may be numbered"; WSSD: BiStatix: News Articles; Nov. 3, 2000; pp 1,2; USA Today; Mar. 31, 1999; http://www.motorola-.com/GSS/SSTG/smartcard/3 6 bst news usa 3 31 99.html.

* cited by examiner

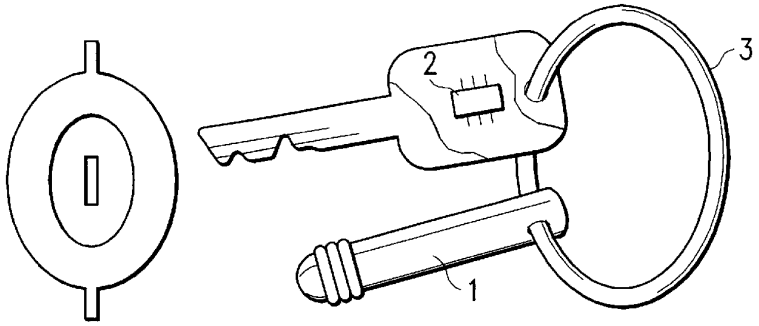

FIG. 1
(PRIOR ART)

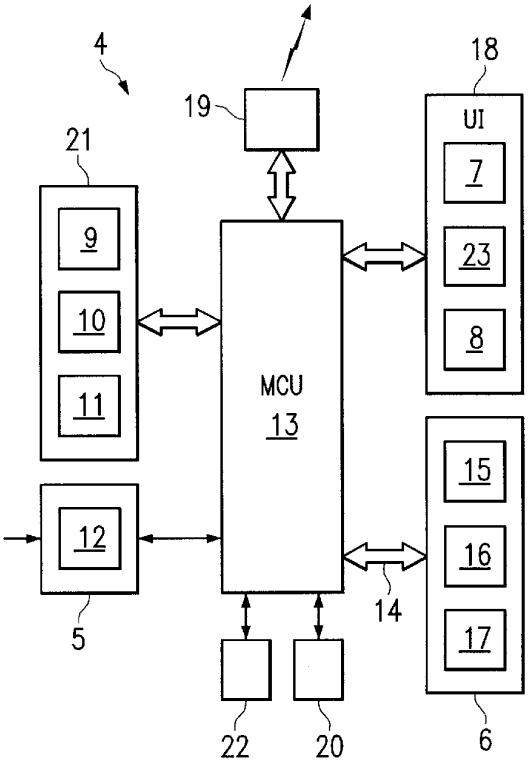

FIG. 2A

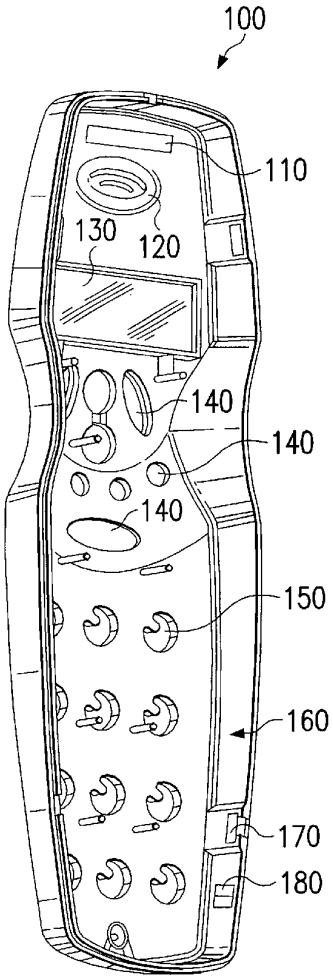

FIG. 2B

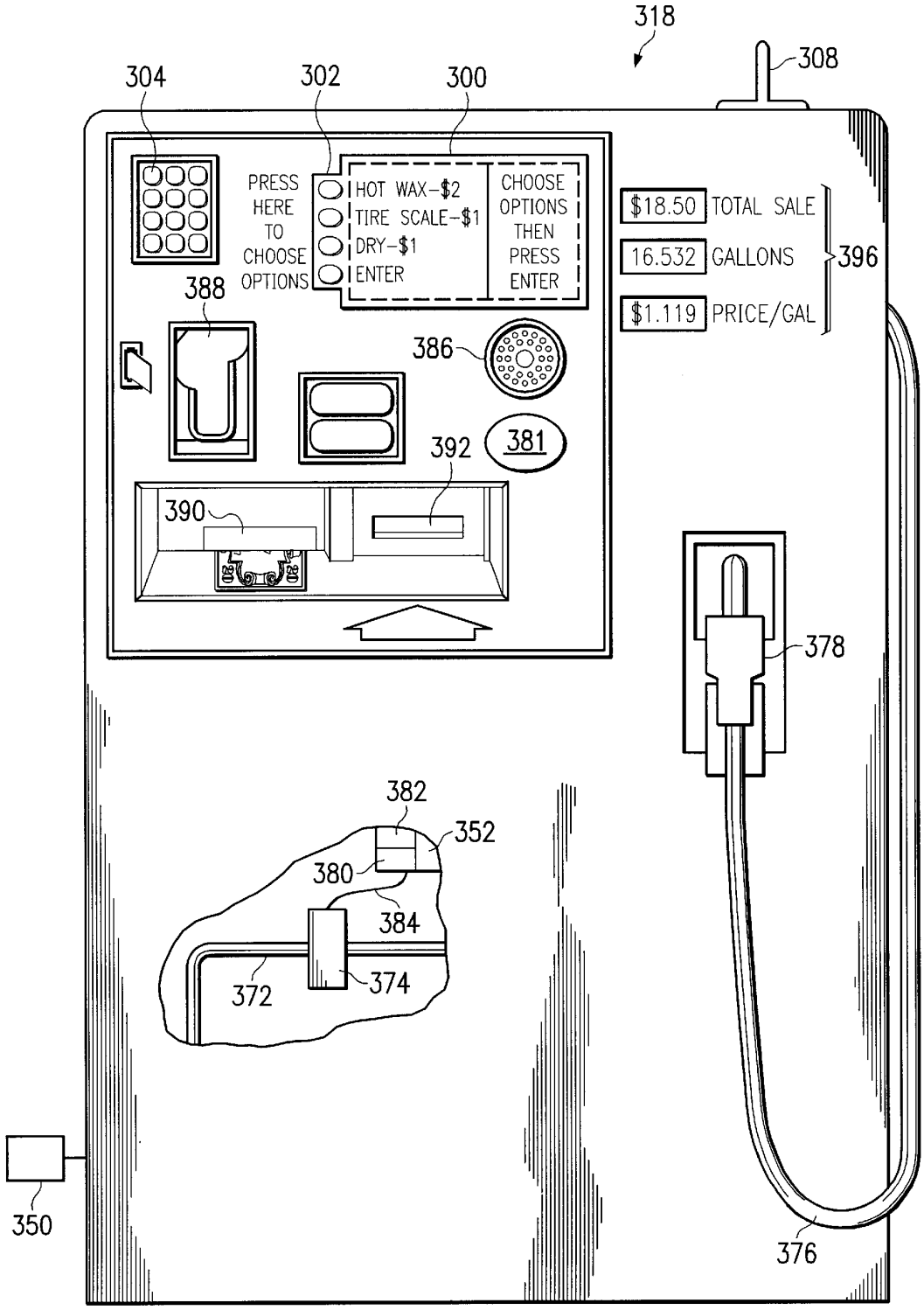

FIG. 3
(PRIOR ART)

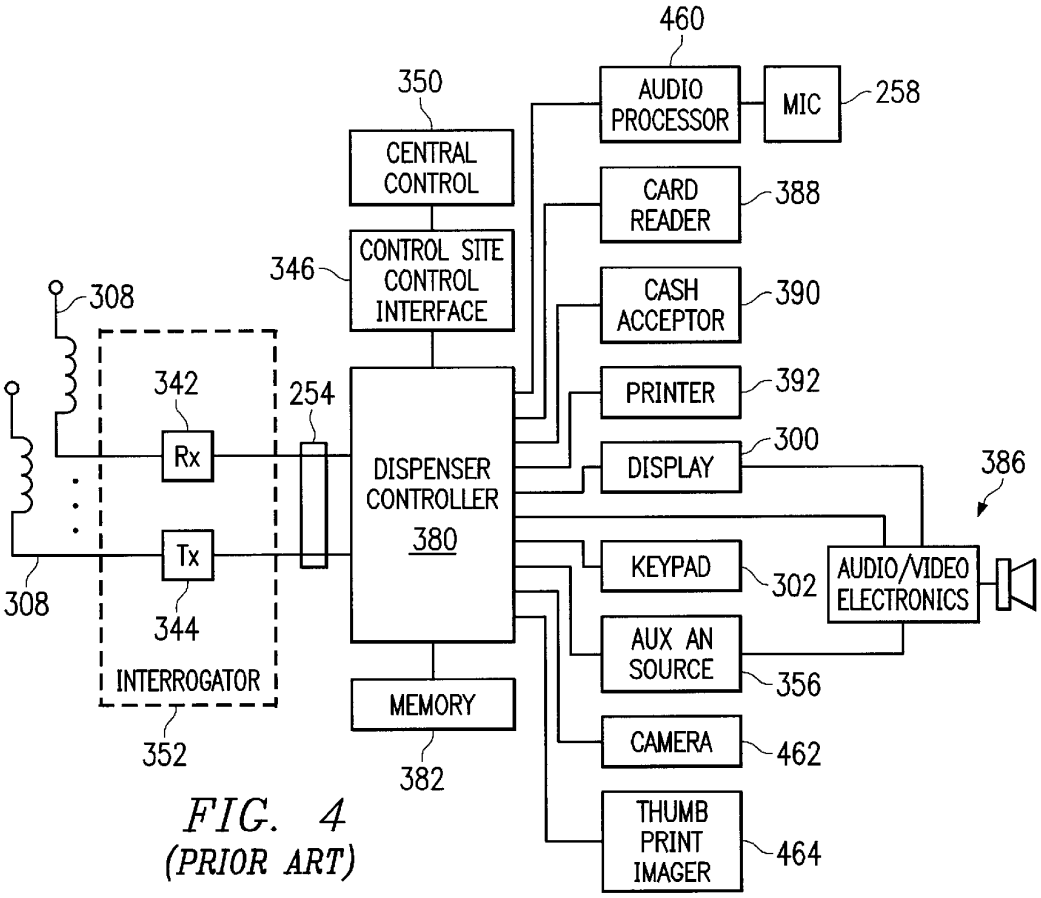

FIG. 4
(PRIOR ART)

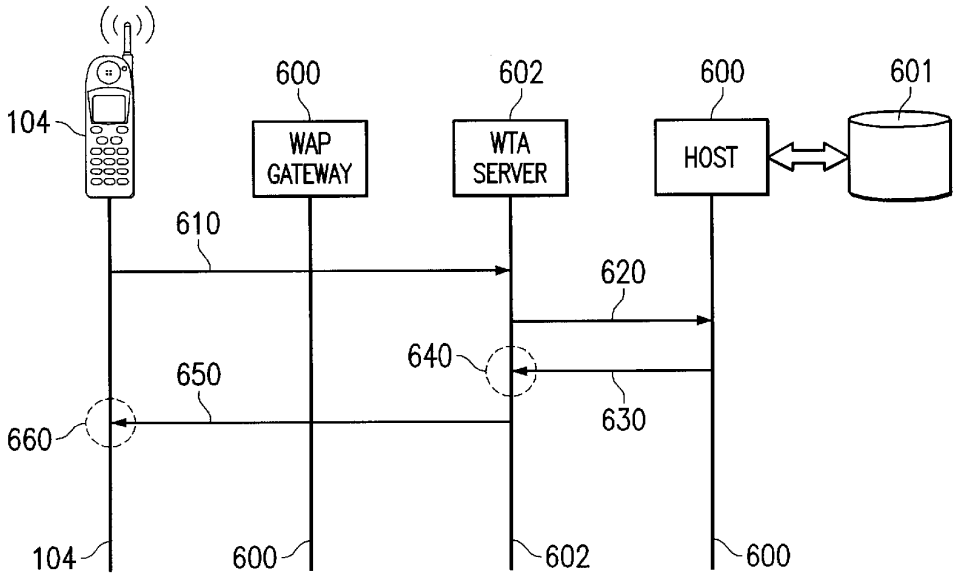

FIG. 6

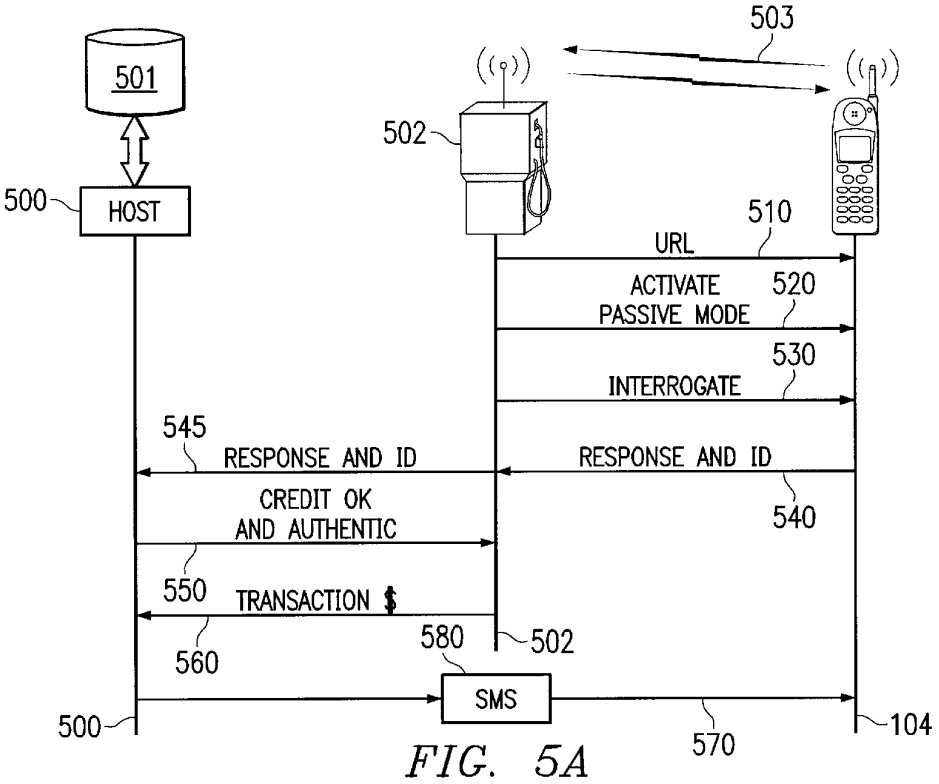
503
501
502
500
HOST
510
URL
ACTIVATE
PASSIVE MODE
520
530
INTERROGATE
545
RESPONSE AND ID
RESPONSE AND ID
CREDIT OK
AND AUTHENTIC
540
550
TRANSACTION $
580
502
560
SMS
500
570
104

FIG. 5A

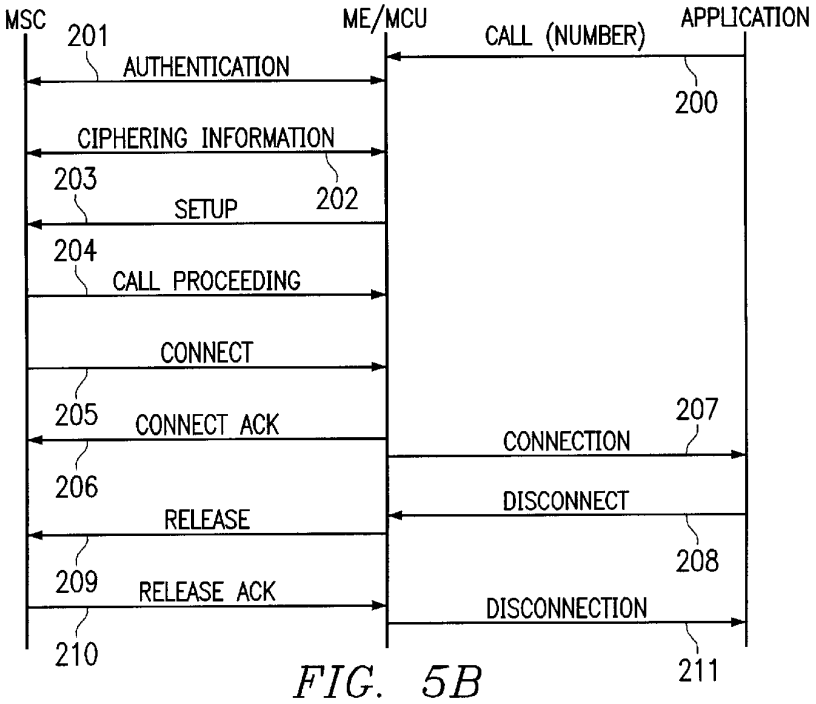
MSC
ME/MCU
APPLICATION
201
AUTHENTICATION
CALL (NUMBER)
200
CIPHERING INFORMATION
203
202
SETUP
204
CALL PROCEEDING
CONNECT
205
CONNECT ACK
207
CONNECTION
206
DISCONNECT
RELEASE
208
209
RELEASE ACK
DISCONNECTION
210
211

FIG. 5B

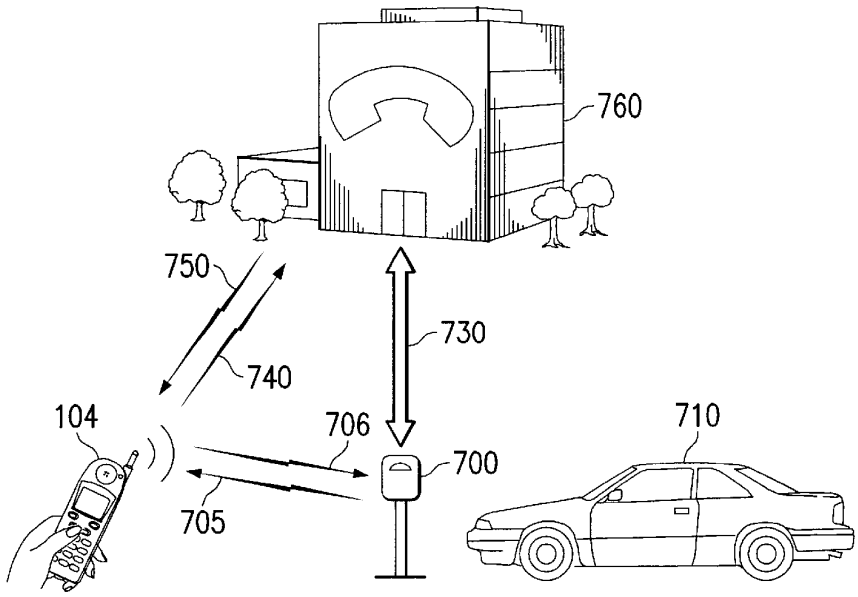
760
750
740
730
104
706
700
710
705

FIG. 7

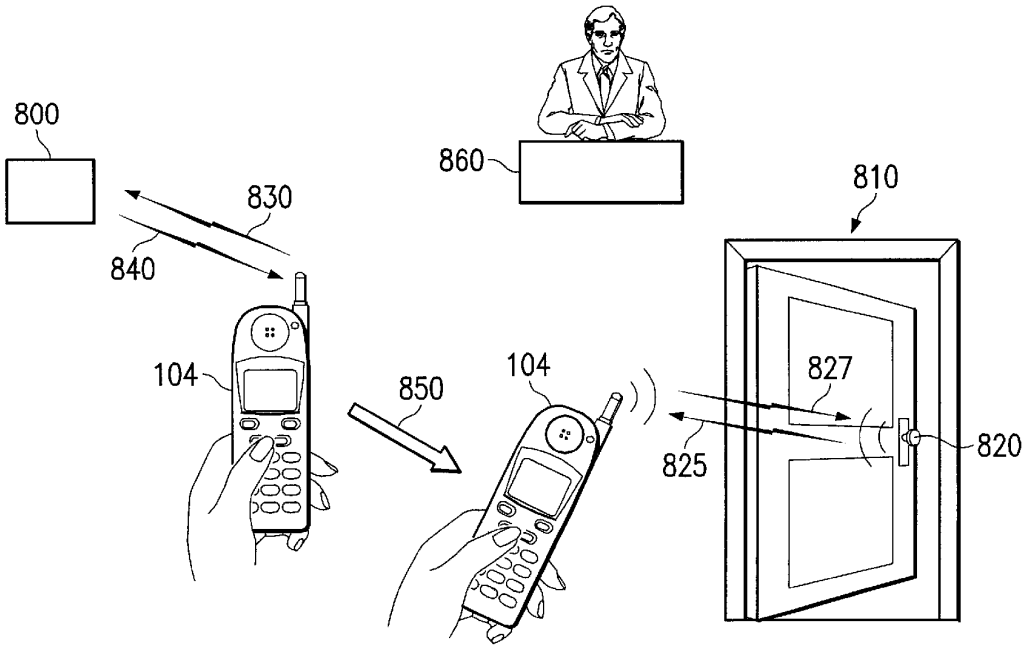
800
860
810
830
840
104
850
104
827
820
825

FIG. 8

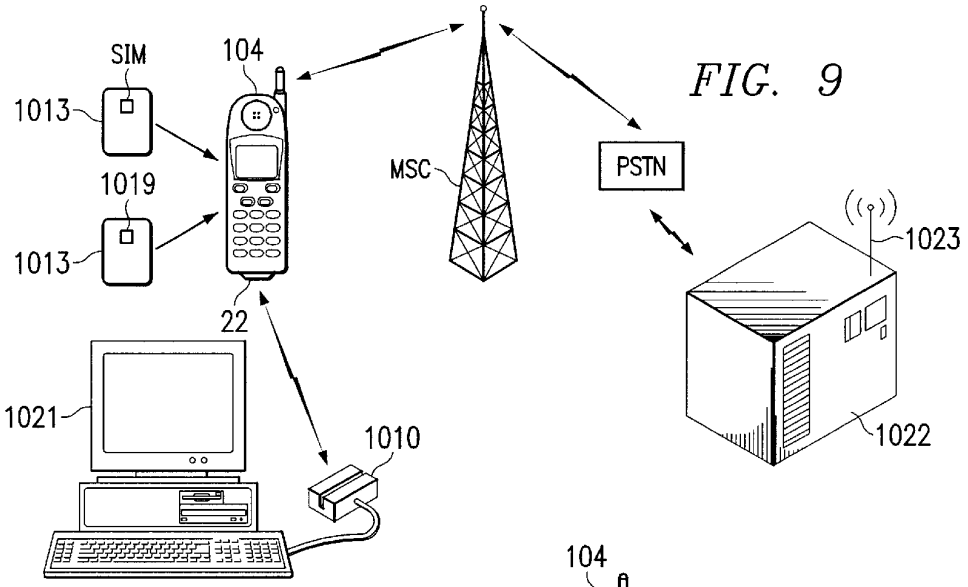

FIG. 9

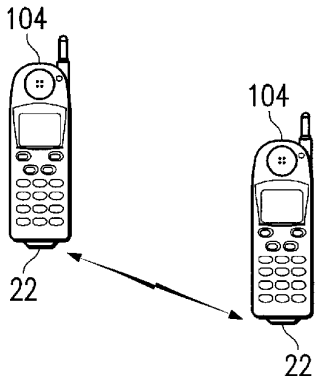

FIG. 10

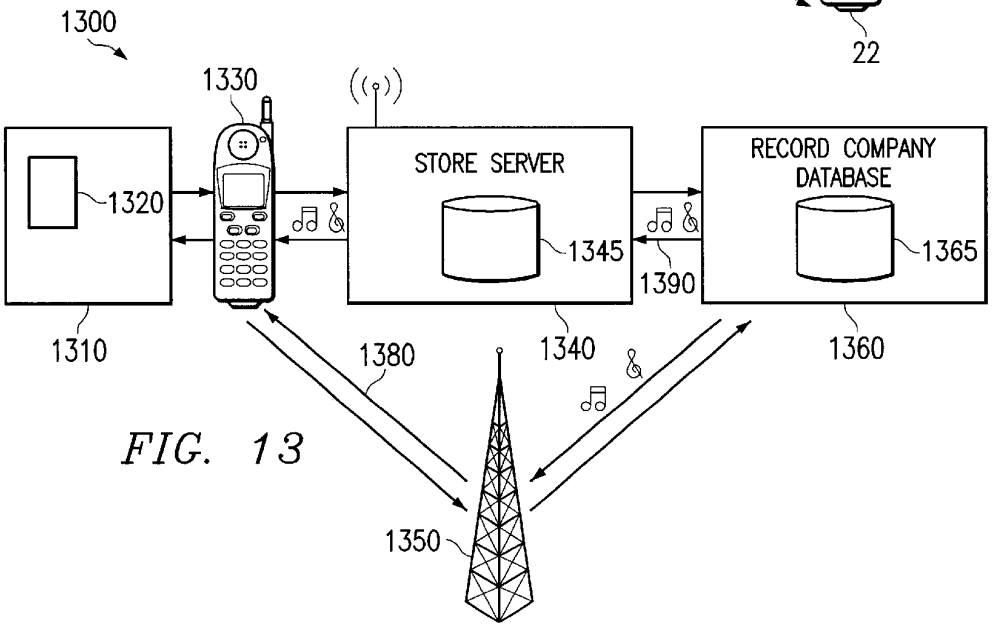

FIG. 13

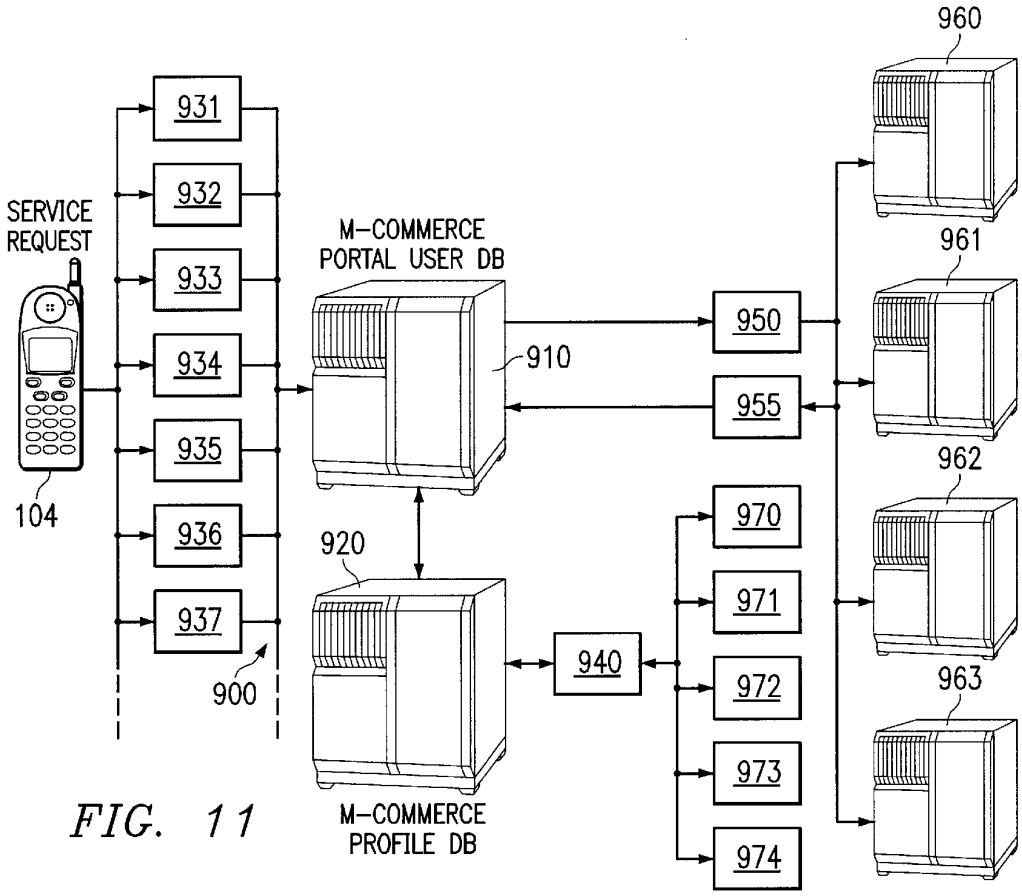
SERVICE REQUEST
104
931
932
933
934
935
936
937
900
M-COMMERCE PORTAL USER DB
910
920
M-COMMERCE PROFILE DB
950
955
940
970
971
972
973
974
960
961
962
963

FIG. 11

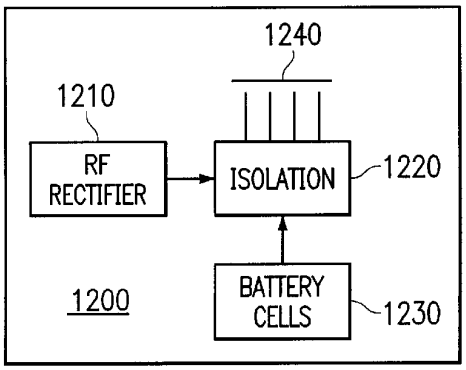
1240
1210
RF RECTIFIER
ISOLATION
1220
1200
BATTERY CELLS
1230

FIG. 12

ELECTRONIC DEVICE COVER WITH EMBEDDED RADIO FREQUENCY (RF) TRANSPONDER AND METHODS OF USING SAME

CROSS REFERENCE TO RELATED APPLICATIONS

This application claims priority under 35 U.S.C. 1.19 to Provisional Application No. 60/222,475 filed on Aug. 2, 2000. This application is related to U.S. Ser. No. 09/092,828 filed on Jun. 5, 1998; U.S. Pat No. 6,418,326 which is a continuation of U.S. Ser. No. 09/074,864 filed on May 8, 1998, now U.S. Pat. No. 6,078,806 granted on Jun. 20, 2000; which is a continuation of U.S. Ser. No. 08/597,845 filed on Feb. 7, 1996, now U.S. Pat. No. 5,887,266 granted on Mar. 23, 1999, all entitled METHOD FOR USING APPLICATIONS IN A MOBILE STATION, A MOBILE STATION AND A SYSTEM FOR EFFECTING PAYMENTS, issued to Heinonen et al., claiming priority date of Feb. 15, 1995 based on a Finnish application. Additionally, this invention is related to the inventions described in U.S. patent application Ser. No. 08/800,591, filed on Feb. 18, 1997, entitled ELECTRONIC DEVICE WITH HOUSING SUPPLEMENT, and U.S. patent application Ser. No. 09/829,764, filed an Apr. 10, 2001, entitled REMOVABLE HOUSING COVER FOR A PORTABLE RADIO COMMUNICATION DEVICE. This invention is related to U.S. Pat. No. 5,768,370 granted on Jun. 16, 1998 entitled USER CHANGEABLE COSMETIC PHONE INTERFACE. Said patents and patent applications are commonly assigned to assignee of the present invention and are incorporated herein by reference.

FIELD OF THE INVENTION

This invention relates generally to mobile station accessories and more particularly to an electronic device cover with embedded transponder and methods using same.

BACKGROUND OF THE INVENTION

There are prior art mobile stations in which the control card includes a subscriber identification unit, such as the SIM (Subscriber Identity Module) used in GSM (Global System for Mobile Communications) standard based systems. The SIM comprises a control unit CPU (Central Processing Unit), program memory ROM (Read Only Memory), data memory suited for long-term storage EEPROM (Electrically Erasable Programmable Read Only Memory) and operation memory suited for saving data during use RAM (Random Access Memory). For using the mobile station, a PIN (Personal Identification Number) number saved on the SIM must be given, generally when the mobile phone is switched on. Other user-specific information, such as telephone numbers, messages, etc. can also be saved in the data memory of the SIM.

There are now also mobile phones which have a data connector for connecting an external data processing unit, such as a portable computer. Thus the mobile phone can be used as a means for data transfer between the portable computer and some other data processing equipment through a radio communication network. In this way it is possible to establish a connection e.g. to the user's bank for checking the balance and effecting payments. However, an arrangement of this kind is not very practical, because a separate cable is needed between the computer and the mobile phone. In addition, the computer must be available for establishing e.g. a bank connection.

Wireless systems, so called smart cards or payment cards, are also known, the said cards being mostly used in payment applications, such as making payments in buses and public telephones. Smart cards like this generally include a central processing unit, a program memory and a data memory. The internal operation of the card in use is controlled by the CPU in accordance with the program code stored in the program memory. The data memory is used for saving information relating to the intended use of the smart card, such as its value in money. For performing the payment transaction, the card also contains means for data transfer, such as a transmitter/receiver based on electromagnetic induction. A disadvantage of smart cards of this kind is, e.g., the fact that several different cards may be needed for different kinds of payment, and so the user must carry a large number of cards. In addition, when the amount of money loaded in the card has been consumed, one needs to buy a new card or load a new amount of money in the card at a sales outlet offering a loading service.

The Japanese patent application JP 4 083 447 presents a mobile phone to which it is possible to add more properties by means of a separate memory card. An application like this is preferably arranged for a certain use, such as for increasing the saving capacity or the telephone number memory. Applications like this are based on a method in which the central processing unit of the mobile phone reads the data saved in the applications (memory cards) and operates in a predetermined way required by the data. A disadvantage of this method is the fact that the functions needed for performing different operations of the applications must be programmed to the central processing unit CPU in advance, whereby the development of new applications also requires changes in the programs of the central processing unit.

The international patent application WO 91/12698 presents a mobile phone to which it is possible to add properties by means of a separate add-in card, such as a smart card. In this way it is possible to restrict the use of the phone by preventing foreign calls, long-distance calls or calls to service numbers, for example. The information about call restrictions is saved on an add-in card which the user has to install in the mobile phone when it is being used. Thus the main use of this method is to prevent the use of some properties of the mobile station.

Automatic identification and data capture technologies are increasingly being used to identify and track items. Radio Frequency IDentification (RFID) transponders, also known as tags or tokens, provide a means of obtaining data without direct contact such as is needed with magnetic strip or bar code technology. Such transponder devices have been around for some time. U.S. Pat. No. 3,713,148 issued to Cardullo et al. on Jan. 23, 1973, and incorporated herein by reference, describes a transponder which includes a changeable or writable memory. An RFID system consists of a transponder, (also referred to as tag or token), with a unique electronic serial number and a reader device also referred to as an interrogator. The tags are self-contained in hermetically sealed capsules or laminates requiring no external power since they get power by rectifying the energy in a field created by the interrogator and storing the energy in capacitive-type circuitry. Nevertheless, some transponders may be powered with small batteries. RFID tags come in a variety of embodiments from a thin, flat and flexible form-factor (thin type) to small capsules (cylindrical type). An example of a thin form-factor is described in U.S. Pat. No. 5,528,222 issued to Moskowitz et al on Jun. 18, 1996. Although the term "radio frequency" is used, other parts of the electromagnetic spectrum may be used to create the

energy field. UHF, microwave and millimeter wave sources may be used by the interrogator depending on the distance between the interrogator and the transponder and material to be penetrated. Commercial examples of RFID transponders are the Texas Instruments' Registration and Information Systems (TIRIS) line of transponders available from Texas Instruments (Dallas, Tex.; www.ti.com).

Transponders such as those from Texas Instruments and others may be embedded in keyfobs, cards or other such items. Gas companies are using keyfob or keychain transponders to identify consumers when they buy gas at the pump and charge it to their gas account (e.g. see http://www.mobil.com/speedpass/). The transponders interact with a fueling system such as provided by Gilbarco Inc.—also know as Marconi Commerce Systems, 7300 West Friendly Avenue, (Greensboro, N.C.; http://www.marconicommerce.com). The fueling system is described in U.S. Pat. No. 6,073,840 issued to Kenneth O. Marion and assigned to Gilbarco Inc., said disclosure is hereby incorporated by reference. Use of keyfobs adds another thing for a consumer to carry and worry about losing. For example, if one leaves the keyfob with another, such as valet parking attendant, it is possible for the attendant to use the keyfob to fill-up many cars while the owner is having dinner or other activities.

There is also a need to allow consumers to collect coupons from other transactions at different establishments. For instance, consumer may wish to collect coupons from mail inserts, newspapers, and newspapers and redeem these hard-copy coupons. The use of hard copy coupons is time consuming and troublesome for the consumer.

Furthermore, use of transponders in the form of keyfobs on keyrings have a problem when stored near certain keys which transmit their own codes. Many automobiles are now being manufactured with a microprocessor embedded in the key which sends a signal to a security system coupled to the ignition system. Without the correct code transmitted by the key, the automobile won't start. But, the keyfob transponder interferes with the coded signal and thus the automobile will not start because the security system can not read the code from the processor in the key. For example, user information regarding the model year 2000 Jeep includes warnings about RFID transponders on the same key ring as the ignition key. FIG. **1** shows a typical transponder to be used on a key ring **3**. Transponder **1** is a typical transponder in the form of a keyfob as described above, **2** is a key with embedded processor manufactured to interact with the security system of an automobile. The security system will only allow engine to start if a correct code is transmitted to the security system from the processor embedded in the key. Transponder **1** interferes with the reception of this coded signal.

Additionally, the transponder on a key ring is inconvenient when the consumer is at a drive-through window and must turn off the car in order to access the keyfob on the key ring. Thus, there is a need to have a transponder located away from the key ring associated with the key to the ignition system of an automobile.

In another example of identification systems, some grocery stores are now providing for self-check, wherein the buyer scans their own groceries using bar codes. Additionally, many stores are saving money by not pricing each item but use bar code scanning and shelve area pricing as a means to convey price information. However, sometimes an item may have been moved from its proper location and a means is needed to verify a price. Symbol technologies, Inc. (Holtsview, N.Y.; http://www.symbol.com) offers a Portable Shopping System. When a shopper enters the store, they are issued a scanner with which they can scan items to determine price and maintain a running total of their purchases. However, the shopper must still go to checkout and present hard copy coupons which the consumer had to clip, sort, file, and redeem at checkout. At checkout the coupons are also scanned individually, which leads to delays and lines. The consumer must also provide cash, credit or debit card to pay for the goods. Thus there is a need for a device which a consumer can carry with them which captures, stores and download coupons, provides a way to keep track of their purchases, and provides a means for automatic payment.

In another example of automated shopping, U.S. Pat. No. 5,729,607 issued to Schkolnick et al. on Mar. 17, 1998 and assigned to International Business Machines describes an intelligent shopping cart. Groceries may be labeled with thin transponders. The transponders on the groceries identify the items and their price. The use of the transponders allows a customer to use a cart as described in the Schkolnick patent or pass through an energy field created by an interrogator and the groceries purchased will automatically be identified and the amount totaled. However, the consumer must still open a wallet and fumble with cash or debit/credit cards. Thus, there is a need to have a payment system associated with an item which a consumer can wear or hang on their person to facilitate automatic payment.

U.S. Pat. No. 6,078,806 granted on Jun. 20, 2000, entitled METHOD FOR USING APPLICATIONS IN A MOBILE STATION, A MOBILE STATION AND A SYSTEM FOR EFFECTING PAYMENTS assigned to the same assignee as the present application provides a method of affecting payments using a mobile station or Personal Trusted Device (PTD).

Thus, for the above reasons, there is a need to have one means of electronic identification and payment which the consumer can carry. Furthermore, there is a need to provide a system in which consumers may earn, store and redeem coupons in a single device.

SUMMARY OF THE INVENTION

In order to eliminate the aforementioned disadvantages and to raise the standard of technology in this field, a new method for using applications in a Personal Trusted Device (PTD) also referred to as mobile radio communication unit comprising mobile station and a changeable cover with intelligence has been invented, as well as a new mobile station with changeable cover as application module and a new system for effecting payments, collecting incentives and other equivalents. The changeable cover provides a means for local data transfer.

The invention is based on the idea that the mobile station can be complemented with applications which have a first mode of operation and a second mode of operation. An application in the first mode of operation does not do anything actively, but stays in the background, passive. In the passive mode, the changeable cover with intelligence may still function to provide for a system of payment. In the second mode of operation, the application is active and can, e.g., control the central processing unit of the mobile station. When in the second mode of operation, the application can also use peripheral equipment which are generally known components of a mobile station, such as a display, keypad, status indicators and data ports, which the application has requested when switching to the second mode of operation.

Applications used in the method of the invention can preferably be of three different types, depending on the

situation in which the application can switch to the second mode of operation: 1) The so-called power-up type, hereby the application switches to the second mode of operation as soon as possible after the mobile station is switched on and/or a new cover in attached, 2) The menu type, in which the user can select the application he wants to be active, e.g. from a menu shown on the display of the mobile station, and 3) Automatic type, in which the application switches to a second mode of operation when a certain condition, defined for the application, has been satisfied. For example, an application of the third operation mode can become active in the GSM system, when the mobile station receives a specific SMS (Short Message Services) message. SMS messages are typically used to transfer short text messages between mobile stations. The automatic type can also be selected from a menu. A menu option can also be used in a situation in which several power-up type applications have been connected to the mobile station, and one of the said applications can switch to the second mode of operation. The method of the invention is characterized in that the application has a first mode of operation and a second mode of operation, whereby the application is passive in the first mode of operation, and in the second mode of operation the application controls the central unit of the mobile station. The mobile station in accordance with the invention is characterized in that it also comprises means for setting the application in a first mode of operation, in which the application is passive, means for setting the application in a second mode of operation, in which the application is active, and means for controlling the central unit of the mobile station when the application is in the said second mode of operation. Remarkable advantages are achieved by this invention compared to the prior art solutions. By means of this invention, the range of possible uses for a mobile station may be substantially increased. Besides the normal phone and data services, the mobile stations related to the invention can also be used e.g. as a credit card and/or as a cash card, instead of traditional plastic cards. By means of a mobile station equipped with a suitable application module the user can make payments in a shop using his/her credit account (credit card application) or pay directly from his/her bank account (cash card application), and thus no real cash is needed. Typical for both credit card and cash card type of applications is that money or its equivalent, in electric form, is stored in a central computer (also referred as a money server) which the mobile station contacts when making a payment. The money server is typically located in a bank's premises. If wanted, it is possible for the application to check the credit limit or the balance of the bank account before the payment is accepted. It is also possible to store money or its equivalent to an "electric money purse" in the mobile station or in the application module, i.e. cover, itself. In that case it preferably is not necessary to check the credit limit or balance of the bank account from the money server before the payment can be accepted, i.e. it is not necessary to contact the money server for making a payment. The information of how much money there is stored in the "electric money purse" can be read from the memory of the mobile station or the application module, from which electric money is subtracted when a payment is made. These kind of applications, where the money is stored in the mobile station or in the application module itself, are also referred as payment applications.

Additional features and advantages of the invention will be readily apparent from the specification and from the drawings.

BRIEF DESCRIPTION OF THE DRAWINGS

FIG. **1** is an illustration of key ring with an RFID fob transponder and an ignition key having a processor which emits an RF signal.

FIG. **2**A is block diagram of a mobile station in accordance with the invention.

FIG. **2**B is an illustration of an electronic device cover in accordance with the invention.

FIG. **3** is an illustration of a fueling dispenser.

FIG. **4** is a block diagram showing the dispenser electronics of the dispenser shown in FIG. **3**.

FIG. **5** is a step diagram showing a transaction system in accordance with the invention.

FIG. **5**B shows the path of the telephone call between the application and a mobile services switching center (MSC) in a mobile radio communication network as a simplified diagram.

FIG. **6** is a step diagram showing a receipt of transaction information via Wireless Application Protocol.

FIG. **7** shows the use of a method for the remote payment of parking in accordance with the invention.

FIG. **8** shows the use of a method for hotel room access in accordance with the invention.

FIG. **9** shows the use of a method in accordance with the invention in connection with a Point of Sale (POS) terminal.

FIG. **10** shows the communication between two mobile stations in accordance with the invention.

FIG. **11** shows a business model for M-Commerce in accordance with the invention.

FIG. **12** is a block diagram of a battery with isolation circuitry in accordance with an embodiment of the invention.

FIG. **13** is a block diagram showing an purchase preview system for music purchase in accordance with an embodiment of the invention.

DETAILED DESCRIPTION OF THE PREFERRED EMBODIMENTS

In FIG. **2**A, a mobile station **4**, also referred to as a "Personal Trusted Device" (PTD), comprises master control unit MCU **13**, user interface UI **18** , high-frequency part **19**, low-frequency part **21**, power unit **5**, a means for data transfer **22** which can be IR or other equivalents in the electromagnetic spectrum, and application module connection unit **6**. The operation of the mobile station **4** is controlled by MCU **13**, which has a program code stored in advance for performing different operations. Mobile station **4** may also comprise Personal Information Management (PIM) capabilities, such as calendar, to-do list, and financial management programs.

The user interface **18** comprises components which are known from prior art mobile phones, namely a display **7**, a keypad **8** and status indicators **23**. MCU **13** produces various, situation-specific messages, operation instructions, menus etc. on the display **7**. Using the keypad **8**, the user can enter different kind of information to the mobile station **4**, such as the identification number and telephone number, and select operations from the menus. Status indicators **23** can preferably be used to indicate the internal modes of operation of the mobile station **4**. The display may also be in the form of glasses worn by the user implemented using LCD screen(s) or the display may be Virtual Retinal Display such as is provided by MicroVision (Seattle, Wash.) and described in U.S. Pat. Nos. 5,596,339; 5,659,327; 5,701,132; 5,982,555; and 6,008,781 assigned to University of Washington.

The radio frequency component **19** is a known component of mobile phones, which is used to transmit and receive calls

and messages using radio frequencies in a radio communication network, such as a GSM network, e.g. through a mobile services switching center MSC.

The low-frequency part **21** preferably comprises a microphone **9**, a headphone **10** and a buzzer **11** or the like.

The operation power for the mobile station **4** is supplied by a battery **12**, which is charged when required. Power unit **5** monitors the charge status and charging procedure of the battery **12**, among other things. Power unit **5** sends the information to central unit MCU **13** when the charge status of the battery **12** falls below a predetermined value, whereby MCU **13** announces this preferably by sounding buzzer **11** and/or showing a message on the display **7**.

A module card may be coupled to the module card connector located in the mobile station **4**. Module card may contain,among other things, a subscriber identity module (SIM) for user identification and memory for storage of logic and data. This memory may be volatile such as RAM and non-volatile memory such as EEPROM, flash or the like.

Application module connection unit **6** is located in mobile station **4** as shown in FIG. **2**A. Other module cards can also be connected to application module connection unit **6** of the exemplary embodiment, whereby they are preferably connected to their own module card connectors. From application module connection unit **6** to the central processing unit of mobile station **4** (MCU), there is application module bus **14**, by means of which the application modules connected to application module connection unit **6** communicate with MCU **4**. AT commands, known e.g. from modems, can be used for the transfer of data and commands.

In addition to the application module bus **14**, there is a separate control and data line from each application module connector **15**, **16**, **17**, of the application module connection unit **6**. Thus it is possible to use a structure based on the standard series ISO 7816 in the control and data line. The standard series ISO 7816 includes the voltage levels and timing diagrams, according to which the application modules are connected to the control and data line.

For each application module, application module connecting unit **6** has a connector, through which application module bus **14** is led to the application module, More than one application module may be connected to the same module card **13**. The second application module on the module card **13** can be a SIM module, for example.

The mobile station **4** also comprises a first means of data transfer, such as an infra red IR transmitter/receiver **22** or other equivalent frequencies in the electromagnetic spectrum. The first means of data transfer can be used to transfer data, with relatively short distances, between the mobile station **4** and a cash register (payment terminal), fuel dispenser as shown in FIG. **3** or, e.g., between two different mobile stations **4**. The a first means of data transfer may also serve as a bar-code reader to read and transfer coded data in the form of bar-codes into memory. The first means of data transfer may also include a data connector **20**, which can be used to couple a computer to the mobile station **4** or may also be used to couple a cover for mobile station **4** as is shown in FIG. **2**B. Mobile station **4** may comprise a housing for elements listed above wherein the housing may be coupled to a removal cover.

FIG. **2**B a detailed view of a removable cover in accordance with an embodiment of the present invention. An embodiment of the present invention is for use with mobile station **4** but may also be used in conjunction with other devices such as an MP3 player for example.

Removable mobile station cover with intelligence called SmartCover™ accessory or hereinafter cover **100**, comprises an RFID transponder **110**, grill opening **120** for speaker of mobile station, transparent element **130** through which to view display of mobile station, plurality of function key through-openings **140**, plurality of alpha numerical key through-openings **150**, external wall element **160**, catch projection **170**, cover to phone interface contacts **180**. Signals such as serial input/output data, read/write signal and other controls signals use these contacts to provide an interface between mobile station **4** and cover **100** through data connector **20**.

RFID transponder **110** may be a cylindrical or wedge type transponder attached to cover or it may be thin type embedded in the material of cover **100**. Cover **100** may also comprise non-volatile memory to store logic and data. The transponder is read by way of a reader also known as an interrogator. Data codes are encoded into the transponder and sent to the reader in response to an interrogation signal. The pattern of circuits may also be produce in a design using conducting ink and the like.

Cover **100** may also be used to transfer optical signals using optical relays currently in the art. Other equivalents for EM energy sensors, optical devices such as Dense Wave Multiple Access (DWMA) and Surface Acoustical wave (SAW) devices may also be created using methods for ink jet printing and self-creating structures such as surfactant-templated silica mesophase structures created using techniques currently under development by Jefferey Brinker et al. at Sandia Corporation (Albuquerque, N.Mex.) and other companies. Attention is directed to U.S. Pat. Nos. 5,057,296; 5,098,684; 5,858,457; 5,911,858; 5,949,071; 6,027,706; 6,037,612; 6,054,111; 6,057,377; and 6,090,545—all incorporated herein by reference.

Covers **100** are changeable and thus allow the device on which cover is attached to become an electronic key for e-commerce or mobile (m-commerce) applications such as secure area access, commodity purchasing and the like.

As was described in FIGS. **2**A and **2**B, contacts **180** allow for electrical signal coupling between an electronic device, such as mobile station **4** in FIG. **2**A, and the cover **100**. This allows the cover to share memory with the electronic device. In the case of a mobile station, interfacing with the mobile station allows for uploading/downloading of data from wireless networks. Thus "Digital Money" or other equivalents such as digital coupons and the like can be loaded into the phone for use in an exchange using the RFID transponder equipped cover **100**. The transponder may also send a coded signal to the registers of MCU to instruct the mobile station to change to passive mode or even power down. This is useful in situations where mobile station use is not allowed or may be unsafe. An example would be in a fueling situation as will be described below. Another example would be on an aircraft where use of a mobile station will interfere with the aircraft instruments.

Additionally, a interrogator may be installed as part of the security system of a motor vehicle. A reader with directional interrogation may interrogate the driver side of a motor vehicle in which the motor is running and the gear is in drive. Thus the mobile station of the driver is disabled while driver is operating the motor vehicle.

Unlike Bluetooth (www.bluetooth.com), which requires acceptance of the standard, infrastructure, device design and development; RFID system infrastructures already exist for many commercial and consumer applications. Covers **100** may be sold as accessories for electronic devices and would

be inexpensive—thus disposable and interchangeable. In an example of an embodiment of the present invention, the mobile station with cover **104** may replace the existing RFID tag, which may be in the form of an electronic badge, keyfob tag, smartcard or the like. Since many people carry mobile stations wherever they go and many wear the mobile station on their person, the mobile station with cover **104** provides a means for data transfer in an electronic payment system as described in U.S. Pat. No. 6,078,806.

The covers **100** may also be preloaded with content such as electronic cash, coupons, icons, animation, ring tones and the like. For example, Disney may provide a cover which has their copyrighted characters preloaded into memory. This is a secure way in which copyrighted material may be distributed. Internet download, distribution by disc or other such methods may result in abuse by the user of Disney copyrighted material—i.e. user may download the software to their system and than share the disc with someone else resulting in Disney losing royalty revenue.

Purchase of Fuel

Current RFID transponder systems for cash-less transactions such as the keyfob are "One Way" transactions. The keyfob transponder only validates the user but does not provide any means of feedback or interaction to the user. The keyfob does not have any user interface, limiting the transaction to an "authentication only" process for purchase or access. Currently, a transaction takes place by user placing RFID keyfob in proximity of reader panel for start of transaction and validation. Any remaining transaction interface is done via the RFID reader at the Point of Sale (POS). By incorporating the RFID tag and mobile station into one device (mobile station and cover) **104**, feedback to the user is now possible through the mobile station's user interface (display and keypad). Follow up with the customer after the transaction is also possible. The POS station may provide a paper receipt. However, by using a mobile station with cover **104**, an electronic receipt may be provided. Additional security may be provided by use of the PIN number already used to access the user's mobile station.

In the environment of fuel dispensing systems, signs at the dispensers and in cellular telephone user manuals provide warnings against using a cell phone near fueling and other potentially explosive areas. Unlike Bluetooth which requires active use of the phone (www.bluetooth.com), RFID type transponders are responsive to energy transmitted from installed devices at the pumps. The fuel dispenser described below and in U.S. Pat. No. 6,073,840, assigned to Gilbarco is designed for use around fuel. Therefore, a passive mode of a mobile station as provided in is necessary around fueling areas. The interrogator of the fueling dispenser described below can place the mobile station into passive mode.

FIG. **3** is an illustration of a fuel dispenser manufactured by Gilbarco, Inc—aka Marconi—(Greensboro, N.C.) and described in U.S. Pat. No. 6,073,840. Fuel dispenser **318** provides a fuel delivery path from an underground storage tank to a vehicle. The delivery path includes fuel delivery line **372** having fuel metering device **374**. Fuel delivery line **372** communicates with fuel delivery hose **376** outside of the dispenser **318** and delivery nozzle **378**. Nozzle **378** provides manual control of fuel delivery.

Fuel dispenser **318** also includes dispenser control system **380** having one or more controllers and associated memory **382**. Dispenser control system **380** may receive volume data from the metering device **374** through cabling **384** as well as provide control of fuel delivery. Dispenser control system **380** may provide audible signals to an audio module and speaker **386** in order to provide various beeps, tones and audible messages to a customer. These messages may include warnings, instructions and advertising.

Dispenser **318** is preferably equipped with a payment acceptor, such as a transponder interrogator area **381**, card reader **388** or cash acceptor **390**, along with a receipt printer **392**. There may be other interrogators such as overhead or embedded in the pavement. With these options, the dispenser control system **380** may interrogate a transponder passed near transponder interrogator area **381**, read data from the magnetic strip of a card inserted in the card reader **388** or receive cash from a customer and communicate such information to a central control system **350** such as the G-site controller sold by Gilbarco Inc., (Greensboro, N.C.). The interrogators located overhead may be used to change the mode of the phone to passive mode for safety reasons.

In addition to placing the phone in passive mode, the interrogators may also provide a signal to operate isolation circuitry which will prevent current from flowing from battery to electronic device—thus further reducing chances of a spark. FIG. **12** is a block diagram of a battery with isolation circuitry in accordance with an embodiment of the present invention. Battery circuitry **1200** comprises energy collection rectifier **1210**, which may be similar to the RFID circuitry but does not transmit. Energy collection block **1210** is coupled to isolation circuitry **1220** which is disposed between power supply **1230** and contacts **1240**. Current is normally provided to electronic device from power supply via contacts **1240**. However, when battery is within the area in which the RF energy is transmitted from interrogator, the energy is collected by **1210** and supplies isolation block **1220** with a signal which is used by isolation block **1220** to prevent current from flowing. Isolation block may be transistors with leads from energy rectifier supplying voltage to gate of said transistors creating a depletion region between source and drain thus preventing current flow. The power supply may be a plurality of battery cells for storing power in the multiple way which is known in the art.

Transponder interrogator area is coupled to interrogator electronics **352**. Central control system **350** typically communicates with a remote network, such as a card verification authority, to ascertain whether a transaction proposed to be charged to or debited from an account associated with the card inserted in the card reader **88** is authorized. Dispenser **318** will include one or more types of displays, preferably one or more alpha-numeric displays **396** together with a high-resolution graphics display **300**. Graphics display **300** will generally have associated key pad **302** adjacent to the display or integrated with the display to provide a touch interface. Dispenser may include an additional, auxiliary key pad **304** associated with the card reader **388** for entering secret codes or personal identification numbers (PIN's). Notably, the displays **396**, **300** and key pads **302**, **304** may be integrated into a single device and/or touch interface. Dispenser control system **380** is preferably comparable to the microprocessor-based control systems used in CRIND (card reader in dispenser) and TRIND (tag or transponder reader in dispenser) type units sold by Gilbarco Inc. under the trademark THE ADVANTAGE. As noted, the dispenser control system **380** may include or be associated with dispenser communication electronics referred to as interrogator electronics **352** for providing remote unidirectional or bidirectional communications between a transponder either and the dispenser. Although the preferred communications method includes radio frequencies in the microwave range, these communications may include other RF, infrared, acoustic or other known remote communication methods

acceptable for use in a fueling environment. Additionally, the dispenser **318** may include one or more antennas **308** associated with the dispenser interrogator **352**.

FIG. **4** shows a basic schematic overview of the dispenser electronics available from Gilbarco, Inc. cited above wherein a dispenser control system **380** includes a controller associated with the memory **382** to interface with the central control system **350** through an interface **146**. The dispenser control system **380** provides a graphical user interface with key pad **302** and display **300**. Audio/video electronics **386** is adapted to interface with the dispenser control system **380** and/or an auxiliary audio/video source **356** to provide advertising, merchandising and multimedia presentations to a customer in addition to basic transaction functions. The graphical user interface provided by the dispenser allows customers to purchase goods and services other than fuel at the dispenser. The customer may purchase a car wash and/or order food from the QSR while fueling the vehicle. Preferably, the customer is provided a video menu at the display **300** to facilitate selection of the various services, goods and food available for purchase. The RFID interrogator **352**, card reader **388** and cash acceptor **390** allow the customer to pay for any of the services, goods or food ordered at the dispenser while the printer **392** will provide a written record of the transaction. The dispenser control system **380** is operatively associated with a dispenser interrogator **352**, which has a receiver **342** and a transmitter **344**. The receiver and transmitter typically associate with one or more antennas **308** to provide remote communications with a transponder. The dispenser control system **80** communicates with the central control system **350** in the backroom **326**.

Currently, consumer drives up to fuel island, exits vehicle, places RFID keyfob up to fuel dispenser's RFID transponder interrogator window **381**. Consumer is validated and gas purchase is authorized. After fuel dispensing is complete, consumer may receive receipt generated at printer **392**, consumer then enters vehicle and drives away.

In one embodiment of the invention, cover **100** as a means of data transfer in passive mode and mobile station **4** are passed inside a EM field created by reader/interrogator. As is known in the art, the interrogator may transmit at a first frequency and the transponder may reply at a second frequency. The signals are modulated in order that encoded data may be transferred between reader/interrogator and transponder. The modulation scheme may be pulse-width, phase-amplitude or the like which are known in the art. Cover with mobile station combination **104** comes within this field. Cover **100** then responds to provide reader/interrogator with information such as electronic identification mobile station phone number and the like. The reader/interrogator may also send a code to a register of MCU instructing phone to go to passive mode. Since information regarding user's mobile station phone number may be provided to the reader/interrogator, user's mobile station may receive a Short Message Service (SMS) message at some point after RFID validation when customer is safely away from the fueling area. Active use of mobile station is not necessary because SMS messages may be receive by a server of a service provider while mobile station is in passive mode and send SMS minutes or hours after customer leaves gas station and mobile station is back in active mode. The message may thank customer for shopping with the fuel vendor and offering some incentive to visit their convenience store at a later date (i.e. "Digital Cash" or other equivalents offering complimentary coffee, soda or discount on some item if visited within a certain time period). Additionally, the incentive can be a cross-promotion with another company offering "Digital Cash" to be redeem while shopping for groceries for example. This encourages consumer to visit fuel vendor convenience store or other associated store even without the need to purchase gasoline. Cover and mobile station combination **104** allows vendor to reach out and touch customer at some point after transaction has been completed.

The SMS message can also be parsed and information provided for entry into Personal Information Management (PIM) applications running on mobile station. For example, the message may be parsed for amount of sale, date, and expense category for entry into an financial application to track expenses.

FIG. **5**A is an illustration of example of a system for purchase transactions in accordance with an embodiment of the invention. The system comprises, host **500** coupled to database **501**, transaction kiosk **502** (e.g. gas dispenser), mobile station with cover **104**. Host may be gas company authorization server or a server located at a company which provides transaction approval services or the like.

The following is an example only. Modifications and substitutions by one skilled in the art after reading the specifications including the claims are deemed to be within the spirit and scope of the invention. Although separate steps are described, some steps may be combined depending on the specifications of the interrogator and RFID tag in cover **100**. The transaction starts **503** when mobile station with cover **104** is within the EM field created by interrogator **352** in kiosk **502**. Interrogator electronics in kiosk **502** may provide mobile station with cover **104** with a URL of the transaction provider for later download of transaction information and other such communication via the internet (step **510**). In the case of a fueling transaction, interrogator in kiosk **502** (fuel dispenser) sends a signal through contacts **180** in cover **100** (FIG. **2**B) to data connector **20** writing to registers in MCU **13** (FIG. **2**A). The signal may command the mobile station to switch to passive mode (step **520**). The interrogator requests ID at step **530**. Cover **100** responses with ID (step **540**). The response and ID information is sent to host **500** at step **545**. Host **500** looks up ID in database **501** and if OK sends transaction approval to kiosk **502**. A hardcopy receipt may be provided. A SMS message is sent through wireless bearer service provider **580** in step **570**.

As described above the SMS message may be parsed for information which may be downloaded into a Personal Information Management (PIM) system. The SMS message may also be specially formatted as is provided for in U.S. Pat. No. 6,078,820 issued to Well et al. on Jun. 20, 2000 and assigned to assignee of the present invention and is hereby incorporated by reference. The formatted data will provide data identifiers which the software applications available to mobile station **4** may use to read the data. The following is an example of such a message:

```
//
APP;ID982
,error:<description>
,TITLE:GAS
,MSG:ACME
,DATE:040900
,TIME:1230
,AMOUNT:2100
```

The parsing system provided by U.S. Pat. No. 6,078,820 is an example of one parsing system there are others which are known in the art.

An embodiment of the present invention my also use Wireless Application Protocol WAP. Information on WAP

can be found at http://www.wapforum.org. WAP is bearer independent, therefore WAP applications can operate on the widest number of air interfaces. The WAP specification defines a protocol stack that can operate on high latency, low bandwidth networks such as SMS. WAP specifies a mark-up language which is a version of Extensible Markup Language (XML). XML allows the use of Metadata in web documents. Metadata is information about information. Therefore, data may be tagged by using Wireless Mark-up Language (WML) and the content (i.e. receipt) pushed—sent to mobile station and cover **104**—or pull—requested from mobile station with cover **104**.

FIG. **6** is an illustration of how an embodiment of the present invention will operate in a WAP environment. It is an examplar only, modifications and substitutions are still within the spirit and scope of the invention. Mobile station with cover **104** sends the host server's URL to Wireless Telephony Application (WTA) server **602** through WAP gateway **600** (step **610**). WTA requests content from host **600** (step **620**). Host **600** looks up transaction in database **601**. Host **600** replies with the tagged content to WTA server at step **630**. At this point, WTA may apply an XSL style sheet to the data at **640** and send the parse data to mobile with cover **104** at step **650**. At point **660**, WTA may access mobile station with cover's **104** application and load the data into a database.

The "Digital Cash" may also be used like gift certificates for a commodity or entertainment (i.e. Starbucks Coffee, movie theatre tickets, etc). By implementing the SmartCover cover as a "Digital Cash" gift certificate (possibly with vendor's logo on the cover—Starbucks, AMC, General Cinema, etc), the mobile station's user interface can be utilized to indicate number of visits, amount of "Digital Cash" remaining or to communicate some post-transaction SMS advertisement or additional "Digital Cash" collection opportunity. The certificate may also be in the form of an SMS or another type e-mail as birthday or other type gift.

Currently, a gift certificate with predetermined cash value is purchased and utilized by purchaser or given to someone for their use at the vendor location or retail chain where the certificate is accepted. At a future date, the certificate is submitted for credit towards a commodity purchase or admittance to a show. Value remaining on certificate may be refunded in the form of cash if the amount remaining cannot be refunded in the form of another gift certificate representing the remaining amount. The problem is that gift certificates must be carried, reducing likelihood of spontaneous purchases with the vendor where the certificate is accepted. Also, in many instances, remaining certificate value from a transaction is refunded to customer in the form of cash, which might not be utilized at the vendor's place of business.

In accordance with the present invention, cover gift certificate has a greater chance of always being with the customer as it is part of the customer's mobile station. Vendor advertisement is possible through the design/cover, resulting in free advertisement. Since the "Digital Cash" value of cover is stored electronically, the remaining "Digital Cash" value from a transaction can be recorded either in the cover's RFID programmable tag, mobile station **4** memory or on the RFID reader host network, increasing the likelihood of all of the "Digital Cash" value being spent with that vendor. Once the "Digital Cash" value of the cover is expended, the cover may be discarded or additional cash value can be programmed back into the cover by visiting vendor's place of business or vendor/promotor's website as is provided for in U.S. Pat. No. 6,078,806.

Virtual ATM and Food Shopping

As in the fueling example, addition of mobile station allows the cover to become a reusable and secure cash card or act as a debit card and a means of local data transfer as shown in U.S. Pat. No. 6,078,806 hereby incorporated by reference and portions reproduced below.

When the "Digital Cash" has run out or more is needed, the electric money purse of the mobile station needs reloading. There are several methods to do that. One method, close to the approach with real money and ATM (Automatic Teller Machine) machines, would be to walk to the nearest "Digital Cash ATM" to download more money from the account. This is not very handy, because it will take some time before these kind of "Digital Cash ATM" machines are widely available. The present invention offers a much more convenient way to do the reloading of "Digital Cash".

Using the SMS service, it is possible to download more "Digital Cash" from the bank account to the mobile station. The mobile station sends a request to send more "Digital Cash", e.g. as a SMS message, to the money server responsible for the user's account. As a response, suppose the account has balance, the money server sends "Digital Cash" to the mobile station, where it is stored to the memory. SMS is used as an example only other services may also be used, e.g. Wireless Application Protocol (WAP) as used in the fueling example above.

In accordance with the present invention, cover **100** has contact points **180** (in FIG. **2**B) connecting mobile station **4** platform to the RFID tag in the cover **100**. "Digital Cash" value can now be loaded into the cover via mobile station **4** and WAP. For instance, a maximum amount of "Digital Cash" (say $100.00 at a time) could be transferred Over-the-Air via WAP from an account (bank or wireless carrier account). The liability is now limited to $100.00. Furthermore, mobile station **4** may require a PIN to authorize any RFID cash-less transaction, making this a more secure method of payment than a credit card, a safer method than carrying cash and more convenient than a traditional cash card or debit card as this cover "Digital Cash" value can be added to via the mobile phone at any time. The mobile station and cover combination now becomes an electronic wallet where cash value may be transferred wirelessly, eliminating the need to locate a ATM machine to obtain cash for small cash purchases such as fast food.

FIG. **5**B shows a simplified diagram of a telephone call between the APPLICATION running on mobile station with cover **104** and the Mobile Services Switching Center MSC, which is part of a mobile services network. At step **200**, the application sends the telephone number to be called to the MCU of the mobile station **104**, which sends to the Mobile Switching Center MSC the identification data and other data needed for establishing a connection (steps **201**, **202** and **203**). The switching center MSC transmits information of the progress of the call (step **204**) and the state of the connection (step **205**) to the mobile station **104**, after which the mobile station **104** sends acknowledgment of connection to the MSC (step **206**) and to the application **18** (step **207**). For closing the connection, the application **18** sends a close connection command to the MCU of the mobile station **1** (step **208**), which sends a close connection request to the Mobile Services Switching Center (step **209**). The MSC sends a connection closed acknowledgment to the MCU of the mobile station **104** (step **210**). Finally, the MCU of the mobile station **104** sends to the application information of the closing of the connection (step **211**).

In the previous exemplary embodiment of the invention the money was stored in an account, finally located in a

money server in a bank. Therefore it was necessary to update the balance in the mobile station and in the bank. In another embodiment of this invention the electric money is stored to the mobile station **4** or cover **100**. When that kind of electric money (also referred to as "Digital Cash or transaction credit value information") is used, e.g. for paying parking fees or phone bills, the corresponding amount of money is cut down from the electric money purse of the mobile station **104**. The "Digital Cash" can be stored e.g. as a code word in mobile stations memory. No link between the payment terminal **1021** (FIG. **10**) and the money server **1022** is required at the moment when the payment is made.

When the "Digital Cash" has run out or more is needed, the electric money purse of the mobile station needs reloading. There are several methods to do that. One method, close to the approach with real money and ATM (Automatic Teller Machine) machines, would be to walk to the nearest "Digital Cash ATM" to download more money from the account. This is not very handy, because it will take some time before these kind of "Digital Cash ATM" machines are widely available. The present invention offers a much more convenient way to do the reloading of "Digital Cash".

Using the SMS service, it is possible to download more "Digital Cash" from the bank account to the mobile station, using a method close to the one described in the previous embodiment of the invention concerning balance inquiry. The mobile station sends a request to send more "Digital Cash", e.g. as a SMS message, to the money server responsible for the user's account. As a response, suppose the account has balance, the money server sends "Digital Cash" to the mobile station, where it is stored to the memory.

The network, where the mobile station in accordance with the invention is used is not limited to GSM only, GSM is a good example of a system that offers required data transfer possibilities. Particularly the SMS messages available in GSM network are handy, because the normal phone/data channel is not effected when transferring SMS messages.

In addition to payment applications, the method of the invention can also be used for other kinds of applications. For example gathering and presenting other information, such as timetables, stock prices, exchange rates, etc. Each of the previous examples can be implemented in a separate application module, or the wanted functions and applications can be combined to a multi-functional application module for the mobile station.

Grocery Shopping

Many people use coupons when they shop for groceries and other items. This requires the consumer to clip the coupons from magazines, newspapers, boxes of item previously purchase and the like. Currently bar codes are being used to encode information regarding products, bar codes may also be used in print advertising to condense a lot of information into a small space. As shown in FIG. **2**A, mobile station **4** also comprises a first means of data transfer, such as an optical or infra red IR transmitter/receiver **22**. Other equivalent frequencies in the electromagnetic spectrum may also be used. Transmitter/receiver **22** may be used to transfer the data encoded in the bar codes to the memory of the mobile station **4** or cover **100**. Thus, consumer/users now may store coupons in memory of mobile station **4** or cover **100** as a form of "Digital Cash," and user interface **18** may be used to keep track of the coupons stored in memory. When consumer/user goes to the store, the same phone may be used to scan items purchased, keep track of total bill, and validate the coupons. When the consumer checks out, the "Digital Cash" may automatically be redeemed at Point of Sale and electronic coupons for items purchased may be validated and electronically transferred to clearing house or other such means for coupon handling as is known in the art. As described above, information regarding the transaction may be automatically enter in a PIM application provided mobile station **4** has PIM capabilities.

Parking Meters

FIG. **7** shows the use of a method to pay for parking meter time. Car **710** parks in front of parking meter **700**. Parking meter **700** comprises sonar, IR or other means to determine that an automobile is parked in the space for which the meter **700** collects parking fees. Parking meter **700** also comprises means for communication with central site **760**, and RFID interrogator for communication with mobile station and cover **104**. Means of communication to central site may be by point to point wireless connection, wireless LAN or through a central civic bus. Such as bus which is being installed in several cities ties traffic lights, traffic flow information and the like to a central site.

The method begins when user wishes to park automobile **710** next to parking meter **700**. User places mobile station **104** close to parking meter **700**. Interrogation signal **705** reads ID information stored in cover **100** and provides mobile station **4** with information such as rates and location of central site **760** through cover **100** and contacts **180**. Cover provides ID by return signal **706**. User enters parking time desired and transmits the information to central site **760** via SMS or the like **740**. Central site **760** then authorizes parking meter for desired time through communication means **730**. Timing information may be maintained at central site **760**, parking meter **700** or the like. A SMS or the like **750** may be sent to mobile station **104** informing user of expiration of parking time and user may respond with additional digital cash being transferred to parking authority through another SMS or the like **740** to central site **760**

Automatic Hotel/Car Rental Registration

FIG. **8** shows the use of a method for hotel room access in accordance with the invention. User may use mobile station **104** to send request for room SMS or the like **830** to a central reservation site **800** to reserve a hotel room. Central reservation site **800** may send return SMS or the like **840** comprising with room number, ID code, directions and other information. User may then proceed **850** directly to room bypassing desk clerk **860**. User then may place mobile station **104** close to door lock **820** which comprises an interrogator. Lock interrogates **825** cover **100** and cover responds **827** with code received from central reservation site **800**. Thus door **810** is unlocked.

Car reservation system is similar. Central rental cars systems at airports are becoming common. For example, at Dallas/Fort Worth airport (DFW) all rental car agencies are now in the same facility. The keys are kept with the cars and to prevent stealing of cars individuals leaving with cars must pass through gate and show their contract to a guard. With a mobile station with cover **104**, the keys may be locked in the car. User requests reservation and as was described above received the ID code to unlock the car and get to the car keys. Thus, only authorized renters are allowed access to the interior of the car and the keys. Future car systems may use the mobile station with cover as a key to the operation of a car; thus, doing away with physical keys.

Fast Food Restaurants

Many fast food restaurants do not accept credit cards. This is due to percentage of the transaction which the fast food restaurants are required to pay for credit cards services. This results in lost sales from prospects that do not have any cash on hand. Time at POS for cash transaction is another problem. Cash transactions require correct change be given

to customer and that cash exchanging hands is inspected for authenticity. This adds to the total transaction time and limits speed at which customer can be processed. Cash transactions are also vulnerable to shrinkage at the POS.

To solve this problem, the fast food vendor may have a Point of Sale (POS) private wireless system (PSID) which would allow customers to have wireless phone access on their system for reduced airtime fee. The mobile station with cover **104** would log onto the PSID and register the customer. At that point the customer receives a SMS or WAP push message welcoming that customer, listing the number of recent visits and asking if the most recent menu choices would like to be purchased. This allows for menu choice to be made before customer ever approaches the counter. Thus reducing waiting in line time is reduced. The customer would then approach the counter where his/her meal would be waiting for payment which requires simply swiping the mobile station over the POS RFID reader. The cash amount in the cover is correctly adjusted by the POS reader. In the case where the cover is used as a debit card, the correct amount is debited from the corresponding account.

FIG. **9** shows the use of a mobile station with cover **104** and application cards **1013** with microprocessor **1019**. Mobile station **104** is in contact with Mobile Switching Center (MSC) with is in turn in contact with a Point of Sale (POS) terminal **1022** through Public Switch Telephone Network (PSTN). POS terminal **1022** may comprise means for local data transfer **1023**. Mobile station **104** may also exchange data with a PC like terminal **1021** connected to a communications network such as the internet. Data exchange may be via means for data transfer **22** on mobile station **104** and means for data transfer **1010** coupled to PC terminal **1021**.

Payments and transfer of coupons in form of "Digital Cash" and other digital codes may be transferred between two mobile stations. FIG. **10** shows an application in which two mobile stations **104** do communicate with each other by means for data transfer **22**. It is possible to transfer digital data such as video and/or speech.

FIG. **11** shows an M-commerce model **900** for use of a mobile station with a changeable cover in accordance with an embodiment of the invention. Consumer using mobile station with cover **104** may shop at a variety of promotion channels **93**X. These may include a home improvement store **931**, video rental store **932**, fast food restaurant **933**, coffee house **934**, grocery store **935**, electronics store **936**, book store **937**, or the like . . . . A central portal database **910** may be maintained wherein service requests from mobile station with cover **104** are processed. The portal may request charge authorization **950** from a plurality of credit account issuers or authorizers **96**x. They may comprise Visa, MasterCard, American Express, First Data, and the like. The credit issues **96**x authorizes the charge and sends notice of authorization **955** to portal **910**. Charges may also be charged to the user's phone bill. A profile database **920** may also be maintained. This database may collect marketing, purchasing habits and other data regarding the consumer of the mobile station so that services suitable to the consumer may be offered by wireless service providers **97**x. Examples of such providers are VoiceStream, AT&T, Verizon, Sprint, SBC Wireless, and the like. Data mining is made easier by use of a database separate from the central portal database, since consumers who choose maximum privacy can be excluded from the profile database and access to portal database limited to transaction authorization only.

Music Preview

Music stores currently provide listen kiosk where you can listen to selections of music media. However, the drawback to the system is one is limited to the selection of music playing at the listening station kiosk. An embodiment of the invention provides a solution. FIG. **13** is an illustration of a system wherein a consumers may download samples of music which they may wish to purchase. The label on the box storing the media **1310** with the music may have an RFID tag **1320** on it which has an identification number or a bar code written on the label. The media may be CD or DVD or the like. A reader in a mobile station **1330** would interrogate the RFID tag or read the bar code. The mobile station establishes a connection with the record company's server **1360** with =database **1365** through wireless access point **1350**. The identification number associated with the product is provided to the server. The server finds the identification number and sample files related to the identification number provided. The samples are then downloaded **1380** to the mobile station **1330** through wireless access point **1350**. The sample files may be MPEG-1 Layer 3 (MP3), MPEG-2 Advanced Audio Coding (AAC) or the like.

An alternative system would be that the music store has a local wireless system as was described above in section regarding fast food. The sample files of music offered for sale at the store may be store in database **1345** of store server **1340**. The identification number is provided to the server **1340** and database **1345** is searched for identification number and the associated sample files. Once located, the samples are transmitted **1370** to mobile station **1330**.

This invention has been described relative to specific embodiments. Modifications that become apparent to persons of ordinary skill in the art only after reading this document are deemed within the spirit and scope of the invention. Applicant's use of the term "plurality" shall be defined as one or more.

What is claimed is:

1. A removal non-planar external cover module for a mobile device comprising:

a main face, having an upper surface which is exposed when said removal non-planar cover is removably attached to said mobile device;

a plurality of wall elements joining said main face at its edge wherein said main face and at least portions of said wall elements define a receivable cavity for receiving said mobile devices; and

transponder having data and circuitry responsive to an interrogation signal to communicate the data with a remote station via wireless communication.

2. The module of claim **1** further comprising:

a memory for storing digital data.

3. The module of claim **2**, wherein memory is preloaded with digital data representing digital cash.

4. The module of claim **2** further comprising:

an interface with a portable radio communication device, wherein digital data representing digital cash may be added to the memory be received by the portable radio communication device and transferred to the memory via the interface.

5. The cover of claim **1**, wherein the transponder is a Radio Frequency IDentification (RFID) transponder.

6. The cover of claim **1**, wherein the transponder is a Surface Acoustic Wave (SAW) transponder.

7. The cover of claim **1**, wherein the transponder is a Dense Wave Multiple Access (DWMA) device.

8. A portable radio communication device comprising:

a removal non-planar external cover comprising:

a main face, having an upper surface which is exposed when the removal non-planar cover is removably attached to the portable radio communication device;

a plurality of wall elements joining the main face at its edge wherein the main face and at least portions of the wall elements define a receivable cavity for receiving the portable radio communication device;

a transponder embedded in the removable non-planar cover, the transponder having data and circuitry responsive to an interrogation signal to communicate the data with a remote station via wireless communication.

9. The portable radio communication device of claim **8** further comprising:

a memory for storing digital data.

10. The portable radio communication device of claim **9** further comprising:

an interface electronically coupling the removable non-planar cover with the portable radio communication device, wherein digital data representing digital cash may be added to the memory be received by the portable radio communication device and transferred to the memory via the connector.

11. The portable radio communication device of claim **9** further comprising:

an interface electronically coupling the removable non-planar cover with the portable radio communication device, wherein the data in the transponder may be modified by data received by the portable communication device.

12. The portable radio communication device of claim **11** wherein the update data may be in the form of a SMS message received by the portable communication device.

13. The portable radio communication device of claim **9**, wherein the transponder is a Radio Frequency IDentification (RFID) transponder.

14. The portable radio communication device of claim **9**, wherein the transponder is a Surface Acoustic Wave (SAW) transponder.

15. The portable radio communication device of claim **9**, wherein the transponder is a Dense Wave Multiple Access (DWMA) device.

* * * * *