(19) Japanese Patent Office (JP)
(12) Publication of unexamined patent applications (A)
(11) Japanese unexamined patent application number JPH5-3568
(43) Publication Date January 8, 1993

---

(51) Int. Cl.[5]	ID Code	Agency FI	FI	Technical display area
H04N 9/04	B	8943-5C		
9/64	R	8942-5C		
9/73	A	8626-5C		

Examination request Not yet requested
Number of claims 7 (Total 16 pages {in the original})

---

(21) Appn no. Patent appn H3-153129
(22) Filing date June 25, 1991
(71) Applicant 000001007
Canon Inc.
30-2 Shimomaruko 3-chome, Ohta-ku, Tokyo
(72) Inventor SHIOMI Yasuhiko
30-2 Shimomaruko 3-chome, Ohta-ku, Tokyo
Canon Inc.
(74) Agent Patent Attorney MARUSHIMA Giichi

---

(54) [Title of the invention] Video camera device

(57) [Abstract]
[Objective] To correct chromatic aberration resulting from the attachment of a zoom lens or the like to a video camera or the like.

[Configuration] This video camera device is configured to correct chromatic aberration by converting a video signal output from an imaging element into digital data, storing the digital data in a memory for each color, and subjecting pixel information in each memory to two-dimensional vector movement, in the memory, in accordance with a state, such as zoom or focus, of a photographic lens, and then combining the pixel information.

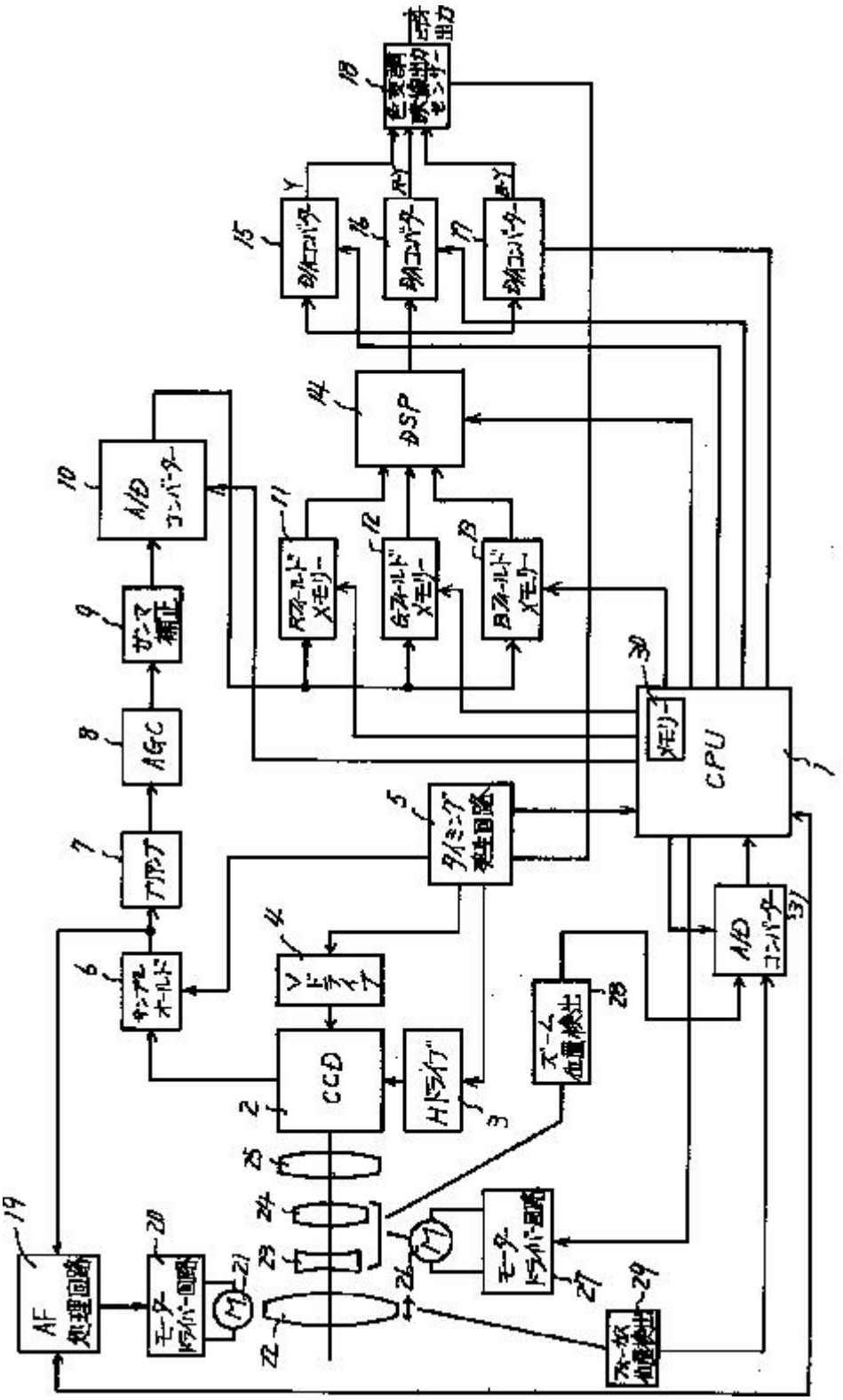

Key	Source	Target
3	H ドライブ	H drive
4	V ドライブ	V drive
5	タイミング発生回路	Timing generation circuit
6	サムプルホールド	Sample-and-hold

7	プリアンプ	Pre-amplifier
9	ガンマ補正	Gamma correction
10	A/D コンバーター	A/D converter
11	R フィールドメモリー	R field memory
12	G フィールドメモリー	G field memory
13	B フィールドメモリー	B field memory
15	D/A コンバーター	D/A converter
16	D/A コンバーター	D/A converter
17	D/A コンバーター	D/A converter
18	色変調映像出力センサー	Color modulated video output sensor
Right of 18	ビデオ出力	Video output
19	AF 処理回路	AF processing circuit
20	モータードライバー回路	Motor driver circuit
27	モータードライバー回路	Motor driver circuit
28	ズーム位置検出	Zoom position detection
29	フォーカス位置検出	Focus position detection
30	メモリー	Memory
31	A/D コンバーター	A/D converter

[Scope of the patent claims]

[Claim 1] A video camera device comprising: a photographic lens; an imaging means for converting subject information that has passed through the photographic lens into an electrical signal; a color signal converting means for accepting input of the signal from the imaging means and converting the same into a plurality of items of color signal information for each pixel; a detecting means for detecting a drive state of the photographic lens; and a control means for causing a color signal conversion coefficient obtained by the color signal converting means to change in accordance with an output from the detecting means.

[Claim 2] The video camera device as claimed in claim 1, wherein the detecting means comprises: a focus position detecting means for detecting a focus position of the photographic lens; and a zoom focal length detecting means for detecting a zoom focal length of the photographic lens.

[Claim 3] The video camera device as claimed in claim 2, wherein the color signal converting means comprises an A/D conversion means for converting each pixel signal output from the imaging means into a digital value.

[Claim 4] The video camera device as claimed in claim 2, wherein the color signal converting means comprises a memory means for digitally storing the signal outputs for each color and each pixel from the imaging means.

[Claim 5] The video camera device as claimed in claim 4, wherein data are arranged two-dimensionally in the memory means in accordance with a position of each pixel included in the imaging means.

[Claim 6] The video camera device as claimed in claim 2, wherein the color signal converting means comprises a vector movement means for changing the two-dimensional arrangement of signal data for each color and each pixel from the imaging means in both X and Y directions.

[Claim 7] The video camera device as claimed in claim 2, wherein the color signal converting means comprises a matrix calculating means for combining signal data for each color and each pixel from the imaging means with one another and executing a calculation thereon.

[Detailed description of the invention]

[0001]

[Field of industrial application] The present invention relates to a video camera device configured to correct chromatic aberration generated by a photographic lens including, for example, a zoom lens, by means of image processing.

[0002]

[Prior art] In recent years, video equipment such as video cameras has undergone remarkable development, and has rapidly become widespread as a result of improvements in operability resulting from reductions in size and weight.

[0003] Furthermore, photographic lens optical systems used in video cameras generally use a four-group type zoom lens or the like, but as video cameras have become more compact, imaging elements are also becoming smaller, and as a result, a reduction in the size of the photographic lens itself is also inevitably progressing.

[0004]

[Problems to be resolved by the invention] However, as photographic lenses become smaller, it becomes more difficult for performance with respect to resolving power and aberration to be adequately maintained in an optical manner, and as illustrated in Figure 2, the effects of lateral chromatic aberration, which arises as a result of the dispersion characteristics of the optical material used in the lens, become a significant problem in terms of maintaining the imaging performance.

[0005] Figure 3 illustrates, separately for each wavelength (red, green, blue), the appearance when

incident light from a subject, which has passed through the photographic lens as illustrated in Figure 2, forms an image on an imaging element. As illustrated, differences in the refractive index for each wavelength cause the size of the image due to the red component illustrated in (a) to be greater than the size of the image due to the green component illustrated in (b), and the size of the image due to the blue component illustrated in (c) to be smaller than the size of the image due to the green component illustrated in (b), and as a result, a large color misalignment arises in the final image obtained by combining each wavelength.

[0006]

[Means for overcoming the problem] The present invention has been made with the objective of solving the problem discussed hereinabove, and is characterized by a video camera device comprising: a photographic lens; an imaging means for converting subject information that has passed through the photographic lens into an electrical signal; a color signal converting means for accepting input of the signal from the imaging means and converting the same into a plurality of items of color signal information for each pixel; a detecting means for detecting a drive state of the photographic lens; and a control means for causing a color signal conversion coefficient obtained by the color signal converting means to change in accordance with an output from the detecting means.

[0007]

[Operation] Adopting this configuration makes it possible to correct color misalignment that occurs in the photographic lens of the video camera, by executing image processing in which video signals for each of R, G, and B colors retrieved from a CCD are once converted into digital data and temporarily stored in individual field memories, and then each field memory as a whole is individually subjected to vector movement on the basis of a drive state of the photographic lens, such

as zoom focal length information and focal distance information relating to the photographic lens, after which the R, G, and B are again combined.

[0008]

[Exemplary embodiments] Exemplary embodiments of a video camera device according to the present invention will now be described in detail with reference to the drawings.

[0009] Figure 1 illustrates the overall circuit configuration of a video camera according to the present invention, the circuit configuration comprising a drive control unit for a video lens and a signal processing unit for the video camera.

[0010] First, incident light from a subject passes through a four-group type zoom lens consisting of a focusing lens 22, a variator lens 23, a compensator lens 24, and a relay lens 25, and forms an image on an imaging element 2 such as a CCD. The CCD 2 is a CCD for color signals, in which R, G and B color filters, for example, are provided alternately on each pixel on an imaging surface of the CCD, and image data accumulated therein are sequentially read out in synchronization with a signal generated by a timing generation circuit, a horizontal component being read out by an H (horizontal) drive 3 and a vertical component being read out under the control of a V (vertical) drive 4. A signal output from the CCD is imported into a sample-and-hold circuit 6 in synchronization with a signal from the timing generation circuit 5, is then amplified to a predetermined level by a pre-amplifier 7, and the gain is automatically adjusted by an AGC 8 so that amplifiers and the like do not become saturated even if the luminance changes, and finally gamma correction is performed to make a gamma characteristic (photoelectric conversion characteristic) of the entire system equal to 1, after which the signal is input into an A/D converter 10. In the A/D converter 10, an analog video signal of each pixel from the CCD 2 is converted into a

digital value in response to a command signal from a system control CPU, and resulting output data are sequentially stored under the control of the CPU, red video signals being stored in an R field memory 11, green video signals being stored in a G field memory 12 and blue video signals being stored in a B field memory 13.

[0011] Inside the DSP 14, which is an image processing microprocessor, when one screen's worth of video signals has been stored in each field memory, an image vector movement calculation, which is discussed hereinafter, is executed for each field memory on the basis of calculation data from the CPU 1, and a luminance output and a color difference output for each pixel are output as digital values. The outputs of the DSP 14 are converted into an analog luminance signal (Y) by a D/A converter 15, an analog color difference signal (R-Y) by a D/A converter 16, and an analog color difference signal (B-Y) by a D/A converter 17, after which the color signals are finally modulated by a color modulation video output circuit 18 and output as a video output multiplexed onto the luminance signal.

[0012] A description will now be given of a video lens drive unit, in which, when a photographer operates a zoom operation button, not shown, to perform zooming, the CPU 1 detects this operation and outputs a command signal (for forward or reverse rotation of the motor) to a motor driver circuit 27. A motor 26 is rotated by means of an electric current from the driver circuit, and a driving force of the motor 26 moves the variator lens 23 and the compensator lens 24 in the direction of the optical axis to execute a predetermined zooming movement. Further, in conjunction with the movement of the lenses, the current focal length information of the photographic lens is detected by a zoom position detection circuit 28.

[0013] Meanwhile, an image signal from the CCD 2 is input through a sample-and-hold circuit into an AF

processing circuit 19 in which an image focus state is detected to determine whether the focus state is front focus or rear focus. Control of energization to a motor 21 is executed by way of a motor driver circuit 20, using the output of the AF processing circuit, and an auto focus operation is performed by moving the focusing lens 22 forward and backward in the direction of the optical axis. Further, current position information of the focusing lens 22 is detected by a focus position detection circuit 29.

[0014] In Figure 4, the arrangement of pixels in the CCD2 is mapped onto coordinates corresponding to the arrangement of the field memories, separately for each of R, G and B in order to simplify the representation. In Figure 4, there are m+1 pixels, from 0 to m, in the X direction, of which the pixels used for actual photographing are from S to t, and similarly, there are n+1 pixels, from 0 to n, in the Y direction, of which the pixels used for actual photographing are from P to q. Further, the effective dimension of one pixel is expressed as Δx in the X direction and Δy in the Y direction.

[0015] Figure 5 illustrates the relative relationships between each item of mapped pixel information for each of the R, G, and B color signals illustrated in Figure 4. (a) signifies that the blue component of light emitted from one point on the subject is incident at a position having the following coordinates:

[0016]

[Other 1]

$$\left(\frac{n}{2} - 2, \frac{m}{2} - 1\right)$$

and in (b), said coordinates are developed onto coordinates representing the green component of the same light, by correcting the amount of aberration on the basis of the focal length and dispersion information of the actual photographic lens. In this way, when aberration is taken into consideration, the information of the pixel having the blue component

moves to the part represented by the oblique lines in (b) on the green component coordinate axes, such that in practice, pixels positioned at the following coordinates on the original blue coordinate axes:

[0017]

[Other 2]

$$\left(\frac{m}{2}-1,\frac{n}{2}-2\right),\left(\frac{m}{2}-1,\frac{n}{2}-1\right),\left(\frac{m}{2},\frac{n}{2}-2\right),\left(\frac{m}{2},\frac{n}{2}-1\right)$$

are included as pixels having a blue component on the green component coordinate axes.

[0018] Similarly, (c) signifies that the red component of the light is incident at a position having the following coordinates:

[0019]

[Other 3]

$$\left(\frac{n}{2}-2,\frac{m}{2}-1\right)$$

and in (d), said coordinates are developed onto green component coordinates in consideration of aberration.

[0020] Next, a method for correcting chromatic aberration by means of vector movement calculation, which is actually performed inside the DSP 14, will be described with reference to Figure 6, Figure 7 and Figure 8.

[0021] First, Figure 6(b) and (c) are diagrams illustrating tables in which aberration correction coefficients K_B and K_R corresponding to focal length information f_M and a focusing lens movement amount ΔN are stored, and the manner in which the aberration correction coefficients are determined from the tables in accordance with f_M and ΔN. In flow 200 of Figure 6(a), current focal length information f_M of the photographic lens is stored in an internal a register of the DSP 14 via the zoom position detection circuit 28, the A/D converter 31, and the CPU 1, and similarly, in flow 201, the movement amount ΔN of the focusing lens 22 in the direction of the optical axis is stored in an internal b register of the DSP 14 via the focus

position detection circuit 29, the A/D converter 31, and the CPU 1. Next, in flows 202 and 203, on the basis of the values in the a register and the b register, the value of the aberration correction coefficient $K_B(a, b)$ for blue light is set in an internal register K_1, and the value of the aberration correction coefficient $K_R(a, b)$ for red light is set in an internal register K_2, and in flows 204 and 205, data m/2 and n/2 indicating a central position on the coordinate axes are set in C_X and C_Y registers, respectively.

[0022] Next, in flows 206, 207 and 208, pointers for sequentially accessing each address in the field memories are initialized. In flow 206, a start address S in the X direction is set in an X_1 register, and in flow 207 a start address P in the Y direction is set in a Y_1 register, as illustrated in Figure 4, and in flow 208, an I pointer for controlling skipping of one line in the vertical direction when the data in the field memory are actually extracted as a video output is reset to zero.

[0023] In Figure 7, first, in flow 210, the value of $M_G(X_1, Y_1)$ of the G field memory 12, which is addressed using the values of the X_1 register and the Y_1 register, is set in an A register. Next, in flow 211, the value of the C_X register is subtracted from the value of the X_1 register, and the resulting value is divided by the value of the register K_1, in which the value of the aberration correction coefficient $K_B(a, b)$ for blue light is set, as a result of which the value of the X coordinate of an image forming position of blue light on the CCD, said image forming position originally corresponding to the image forming position of green light on the CCD, is set in the X_2 register. Next, in flow 212, only the integer part of the value of the X_2 register is set in an X_3 register, and in flow 213, the value of the X_3 register is subtracted from the value of the X_2 register, and the result is set in the X_2 register. Therefore, by means of the above

calculations, the integer part of the amount of deviation of the image forming position of blue light with respect to the image forming position of green light is set in the X_3 register, and the decimal part is set in the X_2 register. Next, in flow 214, it is determined whether the value of the X_2 register is between -0.5 and +0.5, and if said value is between -0.5 and +0.5, the flow proceeds to flow 215, in which the value of the X_3 register and the value of the C_X register are added together and the result is set in the X_3 register. Meanwhile, if in flow 214 the value of the X_2 register is not between -0.5 and +0.5, the flow proceeds to flow 216, in which it is determined whether the X_2 register is positive or negative, and if the value of the X_2 register is positive, in flow 217, 1 is added to the value of the X_3 register and in addition the value of the C_X register is added, and the result is set in the X_3 register. If the value of the X_2 register is negative in flow 216, then in flow 218, 1 is subtracted from the value of the X_3 register, and in addition the value of the C_X register is added, and the result is set in the X_3 register. Next, in flow 219, in the same manner as in the X direction, the value of the Y coordinate of the image forming position of blue light on the CCD, said image forming position corresponding to the image forming position of green light on the CCD, is set in a Y_2 register, and by means of flows 220 and 221, the integer part of the above data is set in a Y_3 register and the decimal part is set in the Y_2 register. Next, if the value of Y_2 is between -0.5 and 0.5 in flow 222, the value of the Y_3 register and the value of the C_Y register are added together in step 223 and the result is set in the Y_3 register. If in flow 222 the value of Y_2 is not between -0.5 and +0.5, in flow 224 it is determined whether the value of Y_2 is positive or negative, and if the value of Y_2 is positive, 1 is added to the Y_3 register and in addition the value of the C_Y register is added, and the

result is set in the Y_3 register. Further, if the value of Y_2 is negative in flow 224, then in flow 226, 1 is subtracted from the value of the Y_3 register, and in addition the value of the C_Y register is added, and the result is set in the Y_3 register.

[0024] As described hereinabove, vector calculations for color correction with respect to the blue light are performed, and ultimately the address of the memory storing the pixel data that are positionally closest, among the data in the B field memory corresponding to the part of the G field memory $M_G(X_1, Y_1)$, is set in the X_3 register and the Y_3 register, and in flow 227, the data $M_B(X_3, Y_3)$ are set in a B register.

[0025] Next, chromatic aberration correction with respect to red light is similarly performed in flows 228 to 244. First, in flow 228, the value of the C_X register is subtracted from the value of the X_1 register, and the resulting value is divided by the value of the register K_2, in which the value of the aberration correction coefficient $K_R(a, b)$ for red light is set, as a result of which the value of the X coordinate of an image forming position of red light on the CCD, said image forming position corresponding to the image forming position of green light on the CCD, is set in the X_2 register. Next, in flows 229 and 230, the integer part and the decimal part of the X_2 register are converted and then set in the X_3 register and the X_2 register, respectively, after which, in flow 231, it is determined whether the value of the X_2 register is between -0.5 and 0.5, and if said value is between said values, in flow 232, the value of the X_3 register and the value of the C_X register are added together, and the result is set in the X_3 register. If in flow 231 the value of the X_2 register is not between -0.5 and +0.5, in flow 233 it is determined whether the X_2 register is positive or negative, and if the value of the X_2 register is positive, 1 is added to the value of the X_3 register and in addition the value of the C_X

register is added, and the result is set in the X_3 register. If X_2 is negative in flow 233, then in flow 235, 1 is subtracted from the value of the X_3 register and the value of the C_X register is added to the result, and the result is set in the X_3 register.

[0026] Next, in flow 236, in the same manner as in the X direction, the value of the Y coordinate of the image forming position of blue light on the CCD, said image forming position corresponding to the image forming position of green light on the CCD, is set in the Y_2 register, and in flows 237 and 238, the integer part of the above data is set in the Y_3 register and the decimal part is set in the Y_2 register. Next, if the value of Y_2 is between -0.5 and 0.5 in flow 239, the value of the Y_3 register and the value of the C_Y register are added together in step 240 and the result is set in the Y_3 register. Further, if in flow 239 the value of the Y_2 register is not between -0.5 and +0.5, the flow proceeds to flow 241 in which it is determined whether said value is positive or negative, and if the value of the Y_2 register is positive, in flow 242, 1 is added to the Y_3 register and in addition the value of the C_Y register is added, and the result is set in the Y_3 register. If the value of the Y_2 register is negative in flow 241, then in flow 243, 1 is subtracted from the value of the Y_3 register, and in addition the value of the C_Y register is added, and the result is set in the Y_3 register.

[0027] As described hereinabove, as a result of vector calculations for performing color correction with respect to red light, the address of the memory storing the pixel data that are positionally closest, among the data in the B field memory corresponding to the part of the G field memory $M_G(X_1, Y_1)$, is set in the X_3 register and the Y_3 register, and in flow 244, the data $M_R(X_3, Y_3)$ are set in a C register.

[0028] As described hereinabove, using the image forming position on the CCD 2 for green light as a

reference, the pixels for blue light and red light corresponding to said image forming position are calculated in each of the A, B and C registers. In flow 250, the calculation $a_1 \times A + b_1 \times B + c_1 \times C$ is executed, with green, blue and red mixing proportions set to a_1, b_1 and c_1, and the luminance output at the position of address X_1, Y_1 (with green light as a reference) is set in a D_Y register. Next, in flow 251, the calculation $a_2 \times A + b_2 \times B + c_2 \times C$ is executed, with green, blue and red mixing proportions set to a_2, b_2 and c_2, and the color difference output (red - luminance) at the position having the address X_1, Y_1 is set in a D_{R-Y} register, and then, in flow 252, the calculation $a_3 \times A + b_3 \times B + c_3 \times C$ is executed, with green, blue and red mixing proportions set to a_3, b_3 and c_3, and the color difference output (blue - luminance) at the position having the address X_1, Y_1 is set in a D_{B-Y} register. As discussed hereinabove, the values of D_Y, D_{R-Y}, and D_{B-Y} are transferred to the D/A converters 15, 16 and 17, respectively, and are output as analog outputs Y, R-Y, and B-Y in accordance with a predetermined timing.

[0029] Next, in flow 253, 1 is added to the value of the X_1 register in which the X-direction address of each field memory (in this case, green is the reference) is set, as illustrated in Figure 4, and in flow 254 it is determined whether the value of X_1 is greater than t (the maximum value of an effective area in the X-direction). If the value of X_1 is not greater than t, the flow returns to flow 210 and the above calculation is executed for the next address. If the value of X_1 is greater than t in flow 254, then in flow 255, s (the minimum value of the effective area in the X direction) is set in the X_1 register, and then in flow 256, 2 is added to the value of the Y_1 register. Here, the reason two values are added to the Y_1 register is to support television interlacing (interlaced scanning). In flow 257, it is determined whether the value of the Y_1 register is greater than q

(the maximum value of the effective area in the Y direction), and if the value of Y_1 is not greater than q, the process simply returns to flow 210 and the calculation for the next address is performed, but if the value of Y_1 is greater than q, then in flow 258, the value of p (the minimum value of the effective area in the Y direction) + 1 is set in the Y_1 register. Next, in flow 259, 1 is added to the value of an I register, for counting the number of fields, then in flow 260 it is determined whether the value of I has reached 2, and if not, the calculation for the next field is once again restarted from flow 210, but if I has reached 2, it is determined that one screen's worth of the above calculation is complete, and the calculation for the next screen (one screen consists of two fields) is started from flow 200.

[0030] (Second exemplary embodiment) A specific method according to a second exemplary embodiment of the present invention will be described with reference to the flow chart in Figure 9 and Figure 10. It should be noted that Figure 9 and Figure 10 are a flowchart in which the part corresponding to Figure 7 of the first exemplary embodiment has been modified, and since the parts in Figure 6 and Figure 8 are exactly the same in the second exemplary embodiment, the corresponding flow chart and an explanation thereof will be omitted.

[0031] In flows 300 to 303, exactly as in the flows 210 to 213 in the first exemplary embodiment, first the value of $MG(X_1, Y_1)$ of the G field memory 12, which is addressed using the values of the X_1 register and the Y_1 register, is set in the A register. Next, in flow 301, the value of the C_X register is subtracted from the value of the X_1 register, and the resulting value is divided by the value of the register K_1, in which the value of the aberration correction coefficient $K_b(a, b)$ for blue light is set, as a result of which the value of the X coordinate of an image forming position of blue light on the CCD, said image forming position

originally corresponding to the image forming position of green light on the CCD, is set in the X_2 register. In flow 302, the integer part of the X_2 register is set in the X_3 register, and in flow 302, the value of the X_3 register is subtracted from the value of the X_2 register, and the result is set in the X_2 register.

[0032] Therefore, in the same manner as the first exemplary embodiment, the integer part of the amount of deviation of the image forming position of blue light with respect to the image forming position of green light is set in the X_3 register, and the decimal part is set in the X_2 register. In flow 304, it is determined whether the value of the X_2 register is greater than 0.75, and if the value of the X_2 register is greater than 0.75, then in flow 305, 1 is added to the value of the X_3 register, and in addition the value of the C_X register is added, the result is set in the X_3 register, after which, in flow 310, the value of the X_3 register is also set in an X_4 register. If in flow 304 the value of the X_2 register is not greater than 0.75, then in flow 306 it is determined whether the value of the X_2 register is less than -0.75, and if the value of X_2 is less than -0.75, then in flow 307, 1 is subtracted from the value of the X_3 register and in addition the value of the C_X register is added, the result is set in the X_3 register, and the flow proceeds to flow 310. Next, if in flow 306 the value of the X_2 register is not less than -0.75, then in flow 308 it is determined whether the value of the X_2 register is between -0.25 and +0.25, and if the value of X_2 is between -0.25 and +0.25, then in flow 309 the value of the C_X register is added to the value of the X_3 register, the result is set in the X_3 register, and the flow proceeds to flow 310. Meanwhile, if in flow 308 the value of the X_2 register is not between -0.25 and +0.25, then in flow 311 it is determined whether the value of the X_2 register is positive, and if the value of the X_2 register is positive, then in flow 312 the

value of the X_3 register and the value of the C_X register are added together and the result is set in the X_3 register, and then in flow 313, 1 is added to the value of the X_3 register and the result is set in the X_4 register. Further, if in flow 311 the value of the X_2 register is negative, then in flow 314 the value of the X_3 register and the value of the C_X register are added together and the result is set in the X_3 register, and then in flow 315, 1 is subtracted from the value of the X_3 register and the result is set in the X_4 register. Similarly, the vector calculation in flows 316 to 330 in the Y direction is performed in exactly the same manner as in the flows 301 to 315. Here, the address closest to the result of vector conversion is set in each of the X_3, X_4, Y_3 and Y_4 registers, and if, for example, the results of the conversions in both the X and Y directions are approximately midway between a certain pixel and its neighboring pixel, the addresses of the two pixels are respectively set in X_3 and X_4 in the X direction, and Y_3 and Y_4 in the Y direction, and if the result of the conversion is substantially contained in one pixel, the address thereof is set in both the X_3 and X_4 registers in the X direction, and both the Y_3 and Y_4 registers in the Y direction. Therefore, in flows 331 to 334, addition results $M_B(X_3, Y_3)$, $M_B(X_4, Y_3)$, $M_B(X_3, Y_4)$, and $M_B(X_4, Y_4)$, which can be addressed by combinations of the registers X_3, X_4, Y_3, and Y_4, are set in the B register, and in flow 335 an average value is obtained and set in the B register.

[0033] The vector calculation for red light is also performed in flows 336 to 370 of Figure 10 in exactly the same manner as flows 301 to 335, and therefore a description thereof will be omitted.

[0034] In this way, using the image forming position on the CCD 2 for green light as a reference, color information for blue light and red light corresponding

to said image forming position is calculated effectively in each of the A, B and C registers.

[0035] (Third exemplary embodiment) A specific method according to a third exemplary embodiment of the present invention will be described with reference to the flow chart in Figure 11 and Figure 12. It should be noted that Figure 11 and Figure 12 are parts corresponding to Figure 7 of the first exemplary embodiment, and since the parts corresponding to Figure 6 and Figure 8 in the first exemplary embodiment are exactly the same, the corresponding flow chart and an explanation thereof will be omitted.

[0036] In flows 400 to 402, in the same manner as in the flows 210 to 212 in the first exemplary embodiment, the value of $M_G(X_1, Y_1)$ of the G field memory 12, which is addressed using the values of the X_1 register and the Y_1 register, is set in the A register. Next, in flow 401, the value of the C_X register is subtracted from the value of the X_1 register, and the resulting value is divided by the value of the register K_1, in which the value of the aberration correction coefficient $K_B(a, b)$ for blue light is set, as a result of which the value of the X coordinate of an image forming position of blue light on the CCD, said image forming position corresponding to the image forming position of green light on the CCD, is set in the X_2 register.

[0037] In flow 402, the integer part of the X_2 register is set in the X_3 register, and then in flow 403, it is determined whether X_2 is positive or negative, and if the value of X_2 is negative, the flow proceeds to flow 411, but if the value of X_2 is positive, the flow proceeds to flow 404, in which 1 is added to the value of the X_3 register and the result is set in the X_4 register.

[0038] Therefore, the X-direction addresses of two consecutive pixels on the coordinate axis of the blue component that are closest to the pixel M_G (X_1, Y_1) at

the position indicated by the X_1, Y_1 coordinates, after vector conversion, are set in the X_3 and X_4 registers.

[0039] Next, in flow 405, 0.5 is added to the X_3 register as 0.5 of a pixel, and the result is multiplied by the value of the register K_1, described above, and then set in an X_5 register. Next, in flow 406, the value of the C_X register is subtracted from the value of the X_1 register, and then 0.5 is added, and the result is then set in the X_2 register.

[0040] In flow 407, the value of the X_5 register is compared with the value of the X_2 register, and if the value of the X_5 register is greater than the value of the X_2 register, it is determined that there is no proportion contained in the X-direction address part indicated by the data value in the X_4 register, and in flow 408 the value of a T_{X4} register is reset to 0. If the value of the X_5 register is less than the value of the X_2 register, then in flow 409 the value of the X_5 register is subtracted from the value of the X_2 register as a proportion contained in the X-direction address part indicated by the data value in the X_4 register, and the result is set in the T_{X4} register. In flow 410, the value of the T_{X4} register is subtracted from 1 as a proportion contained in the X-direction address part indicated by the data value in the X_3 register, and the result is set in the T_{X3} register.

[0041] Meanwhile, if the value of the X_2 register is negative, then in flow 411, 1 is subtracted from the value of the X_3 register and set in the X_4 register, and thus the X-direction addresses of two consecutive pixels on the coordinate axis of the blue component that are closest to the pixel $M_G(X_1, Y_1)$ at the position indicated by the X_1, Y_1 coordinates, after vector conversion, are set in the X_3 and X_4 registers. Next, in flow 412, 0.5 is subtracted from the X_3 register as 0.5 of a pixel, and the result is multiplied by the value of the register K_2, described above, and then set in the X_5 register. Next, in flow 413, the value of the C_Y

register is subtracted from the value of the X_1 register, and in addition 0.5 is subtracted, and the result is set in the X_2 register. In flow 414, the value of the X_5 register is compared with the value of the X_2 register, and if the value of the X_5 register is less than the value of the X_2 register, it is determined that there is no proportion contained in the X-direction address part indicated by the data value in the X_4 register, and in flow 415 the value of the T_{X4} register is reset to 0. If the value of the X_5 register is less than the value of the X_2 register, then in flow 416 the value of the X_2 register is subtracted from the value of the X_5 register as a proportion contained in the X-direction address part indicated by the data value in the X_4 register, and the result is set in the T_{X4} register. In flow 417, the value of the T_{X4} register is subtracted from 1 as a proportion contained in the X-direction address part indicated by the data value in the X_3 register, and the result is set in the T_{X3} register.

[0042] Similarly, in flows 418 to 434, vector calculations in the Y direction are performed in exactly the same manner as in flows 401 to 417, and therefore a description thereof will be omitted.

[0043] Therefore, the addresses of consecutive pixels in the blue component that are closest to the pixel $M_G(X_1, Y_1)$ at the position indicated by the coordinate values of X_1, Y_1 in the green component, after vector conversion for chromatic aberration correction has been performed, are set in the X_3, X_4, Y_3, and Y_4 registers, and furthermore, the proportions contained in consecutive pixels in each of the X and Y directions are set in the T_{X3}, T_{X4}, T_{Y3}, and T_{Y4} registers, respectively. Therefore, in flows 435 to 438, the result of multiplying $M_B(X_3, Y_3)$ by the content proportions T_{X3}, T_{Y3}, the result of multiplying $M_B(X_4, Y_3)$ by the content proportions T_{X4}, T_{Y3}, the result of multiplying $M_B(X_3, Y_4)$ by the content proportions T_{X3},

T_{Y4}, and the result of multiplying $M_B(X_4, Y_4)$ by the content proportions T_{X4}, T_{Y4} are all added together and set in the B register.

[0044] The vector calculation for red light is also performed in flows 439 to 476 of Figure 12 in exactly the same manner as flows 401 to 438, and therefore a description thereof will be omitted.

[0045] In this way, using the image forming position on the CCD 2 for green light as a reference, color information for blue light and red light corresponding to said image forming position is calculated accurately in each of the A, B and C registers.

[0046]

[Effect of the invention] As described hereinabove, in a video camera to which a zoom lens or the like has been attached, chromatic aberration of the photographic lens, which changes depending on the focal length and AF, for example, can be eliminated by executing vector calculations for each of the R, G, and B color information in the signal processing circuit on the video camera side, thereby making it possible to realize a high-quality video camera device with no color misalignment.

[Brief description of the drawings]

[Figure 1] is a block diagram illustrating a configuration of a video camera device according to the present invention.

[Figure 2] is a diagram for explaining chromatic aberration caused by a photographic lens.

[Figure 3] is a diagram illustrating, separately for wavelengths of each color, images of an image formed on an imaging element through a photographic lens.

[Figure 4] is a diagram illustrating a pixel array of a CCD.

[Figure 5] is a diagram illustrating the relative relationships between each item of pixel information imaged on an imaging screen of a CCD.

[Figure 6] are a flowchart for explaining a chromatic aberration correction operation according to the present invention and a table for selecting an aberration correction coefficient.

[Figure 7] is a flowchart for explaining a chromatic aberration correction operation according to the present invention.

[Figure 8] is a flowchart for explaining a chromatic aberration correction operation according to the present invention.

[Figure 9] is a flowchart for explaining a second exemplary embodiment of a chromatic aberration correction operation according to the present invention.

[Figure 10] is a flowchart for explaining a second exemplary embodiment of a chromatic aberration correction operation according to the present invention.

[Figure 11] is a flowchart for explaining a third exemplary embodiment of a chromatic aberration correction operation according to the present invention.

[Figure 12] is a flowchart for explaining a third exemplary embodiment of a chromatic aberration correction operation according to the present invention.

[Figure 1]

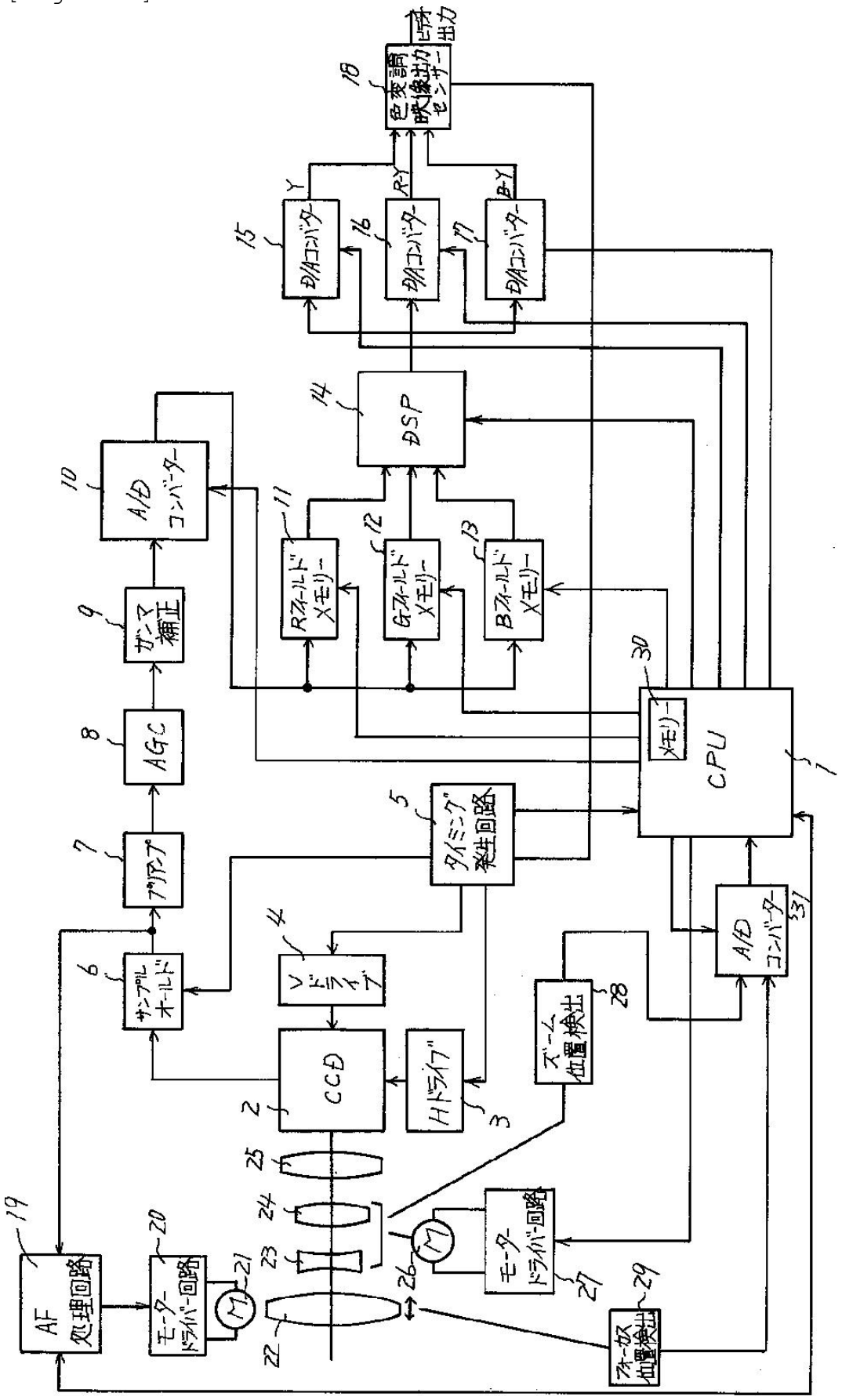

AF 処理回路
モーター ドライバー回路
M
CCD
Hドライブ
Vドライブ
サンプル オールド
プリアンプ
AGC
ガンマ 補正
A/D コンバーター
タイミング 発生回路
ズーム 位置検出
モーター ドライバー回路
フォーカス 位置検出
CPU
メモリー
A/D コンバーター
Rフィールド メモリー
Gフィールド メモリー
Bフィールド メモリー
DSP
D/Aコンバーター
D/Aコンバーター
D/Aコンバーター
Y
R-Y
B-Y
色変調 映像出力 センサー
ビデオ 出力

Key	Source	Target
3	H ドライブ	H drive
4	V ドライブ	V drive
5	タイミング発生回路	Timing generation circuit
6	サムプルホールド	Sample-and-hold
7	プリアンプ	Pre-amplifier
9	ガンマ補正	Gamma correction
10	A/D コンバーター	A/D converter
11	R フィールドメモリー	R field memory
12	G フィールドメモリー	G field memory
13	B フィールドメモリー	B field memory
15	D/A コンバーター	D/A converter
16	D/A コンバーター	D/A converter
17	D/A コンバーター	D/A converter
18	色変調映像出力センサー	Color modulated video output sensor
Right of 18	ビデオ出力	Video output
19	AF 処理回路	AF processing circuit
20	モータードライバー回路	Motor driver circuit
27	モータードライバー回路	Motor driver circuit
28	ズーム位置検出	Zoom position detection
29	フォーカス位置検出	Focus position detection
30	メモリー	Memory
31	A/D コンバーター	A/D converter

[Figure 2]

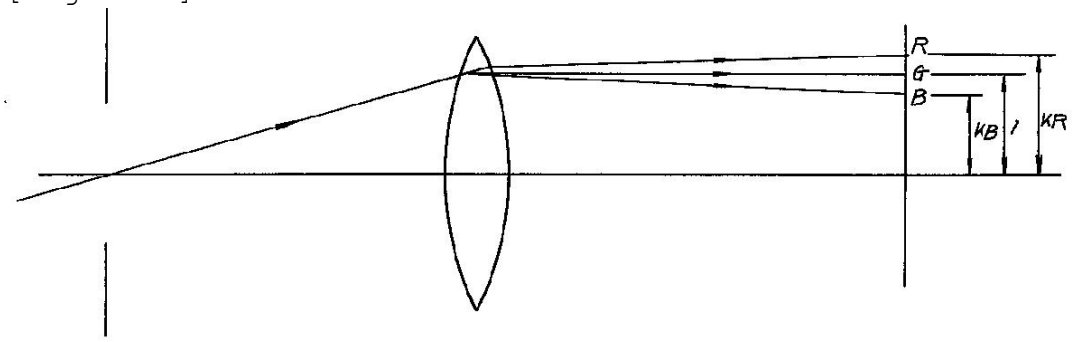

[Figure 3]

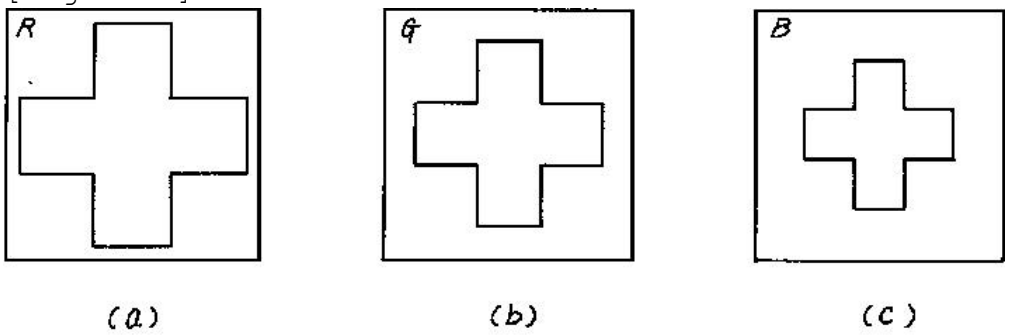

[Figure 4]

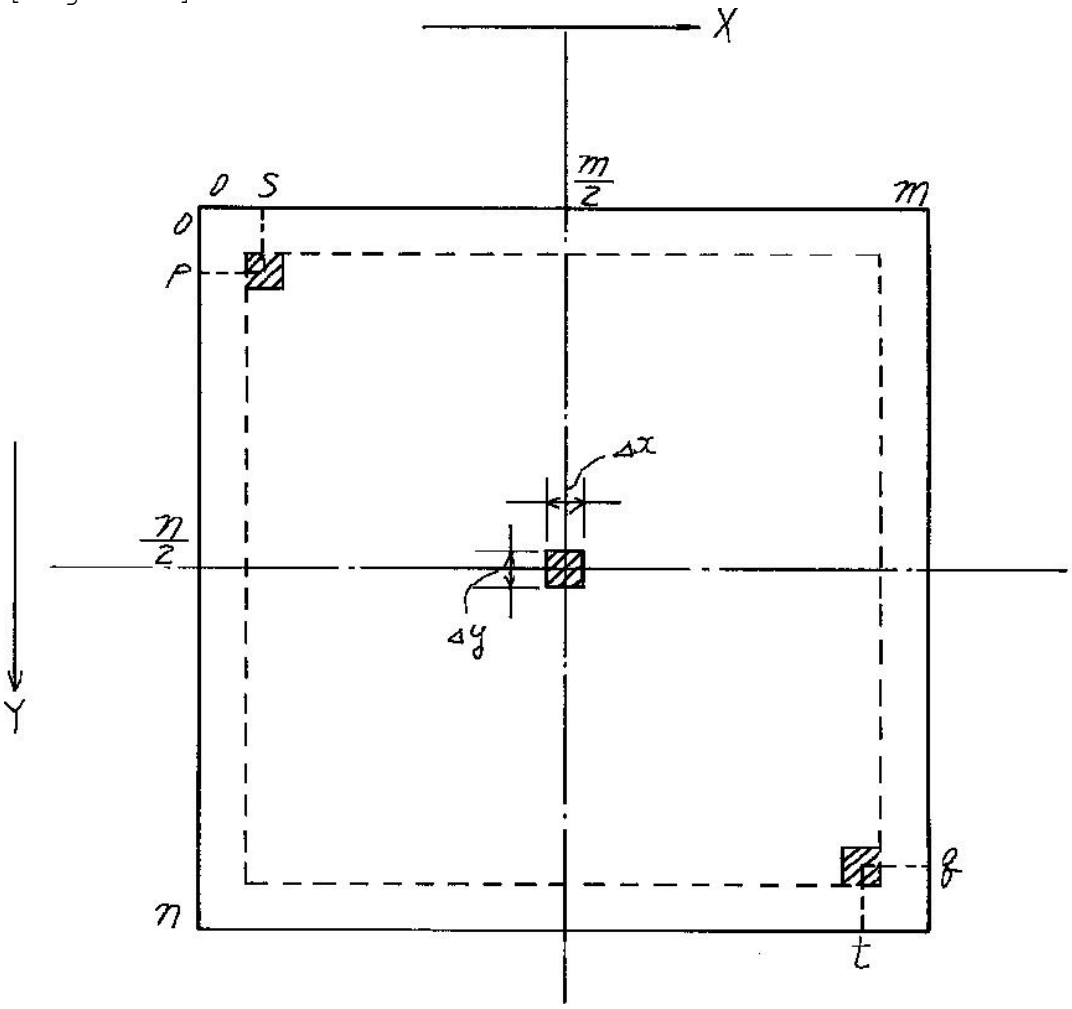

[Figure 5]

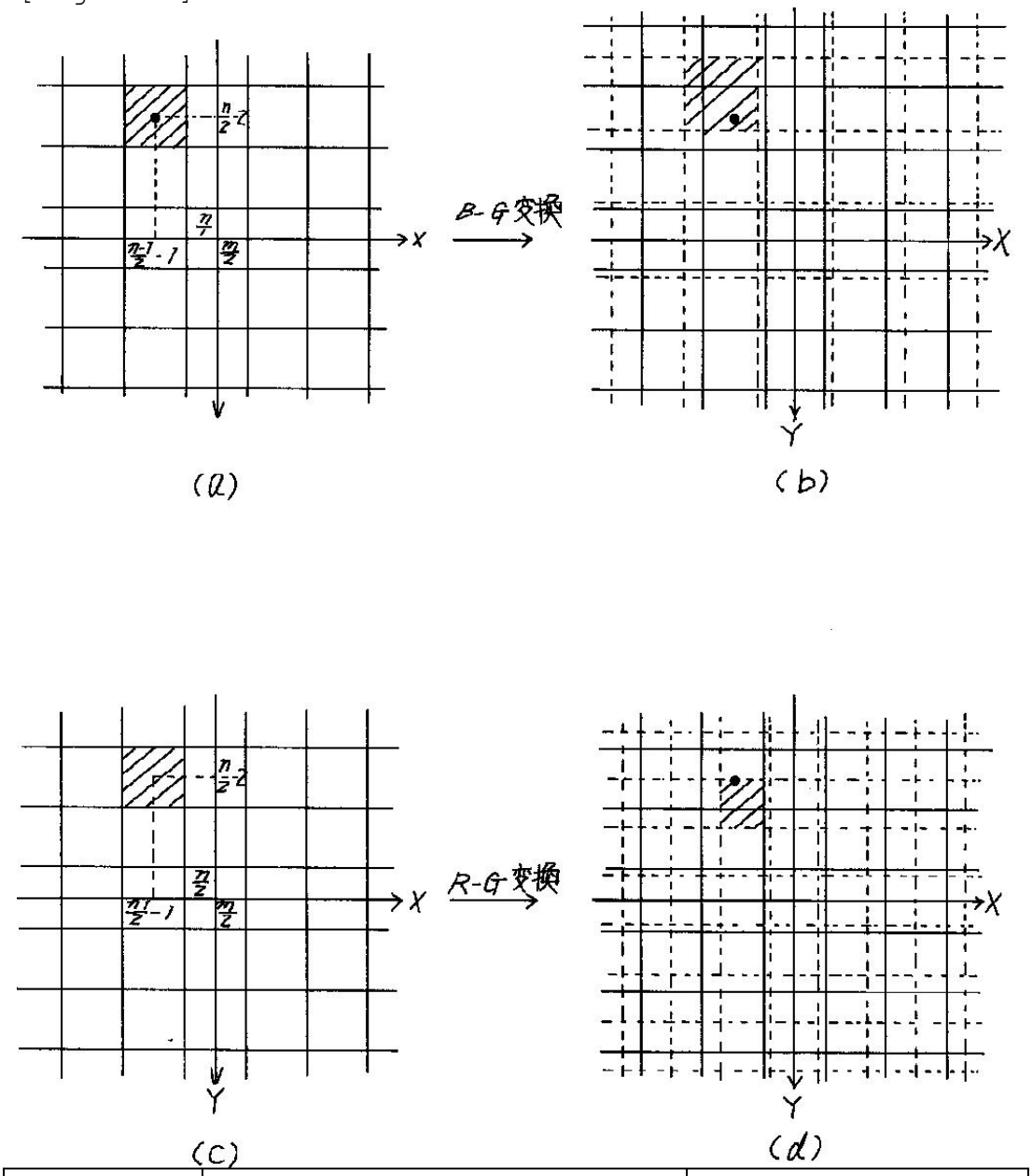

Key	Source	Target
Top	B-G 变换	B-G conversion
Bottom	R-G 变换	R-G conversion

[Figure 6]

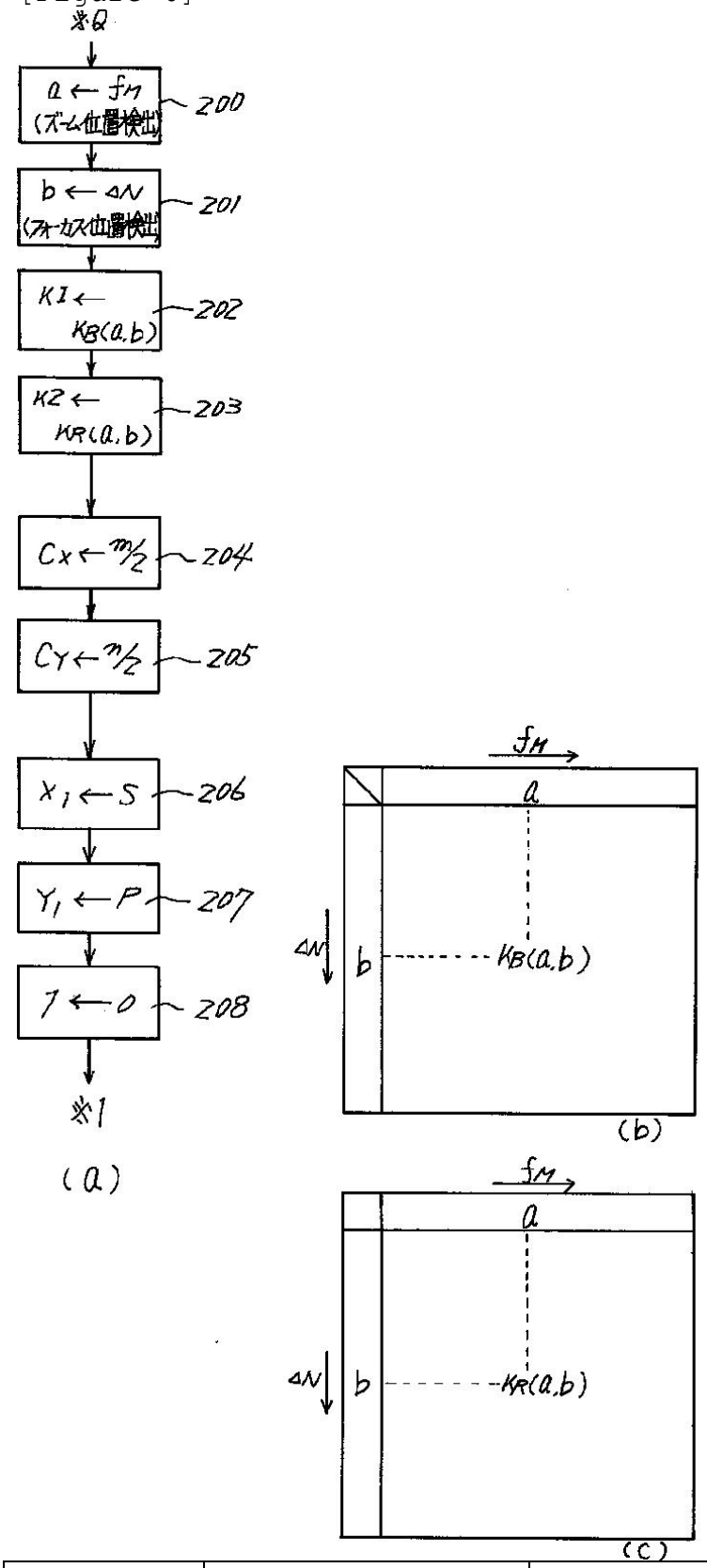

Key	Source	Target
200	ズーム位置検出	Zoom position detection
201	フォーカス位置検出	Focus position detection

[Figure 8]

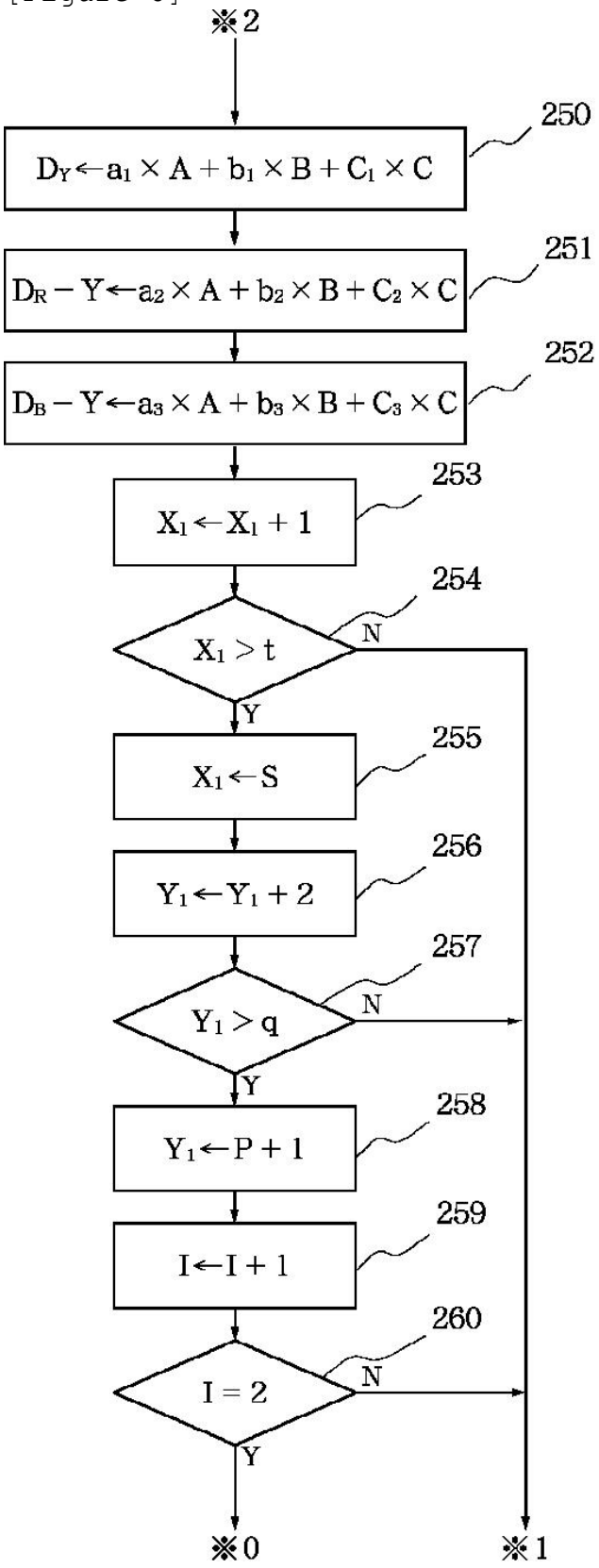
※2
250
$D_Y \leftarrow a_1 \times A + b_1 \times B + C_1 \times C$
251
$D_R - Y \leftarrow a_2 \times A + b_2 \times B + C_2 \times C$
252
$D_B - Y \leftarrow a_3 \times A + b_3 \times B + C_3 \times C$
253
$X_1 \leftarrow X_1 + 1$
254
$X_1 > t$
N
Y
255
$X_1 \leftarrow S$
256
$Y_1 \leftarrow Y_1 + 2$
257
$Y_1 > q$
N
Y
258
$Y_1 \leftarrow P + 1$
259
$I \leftarrow I + 1$
260
$I = 2$
N
Y
※0
※1

[Figure 7]

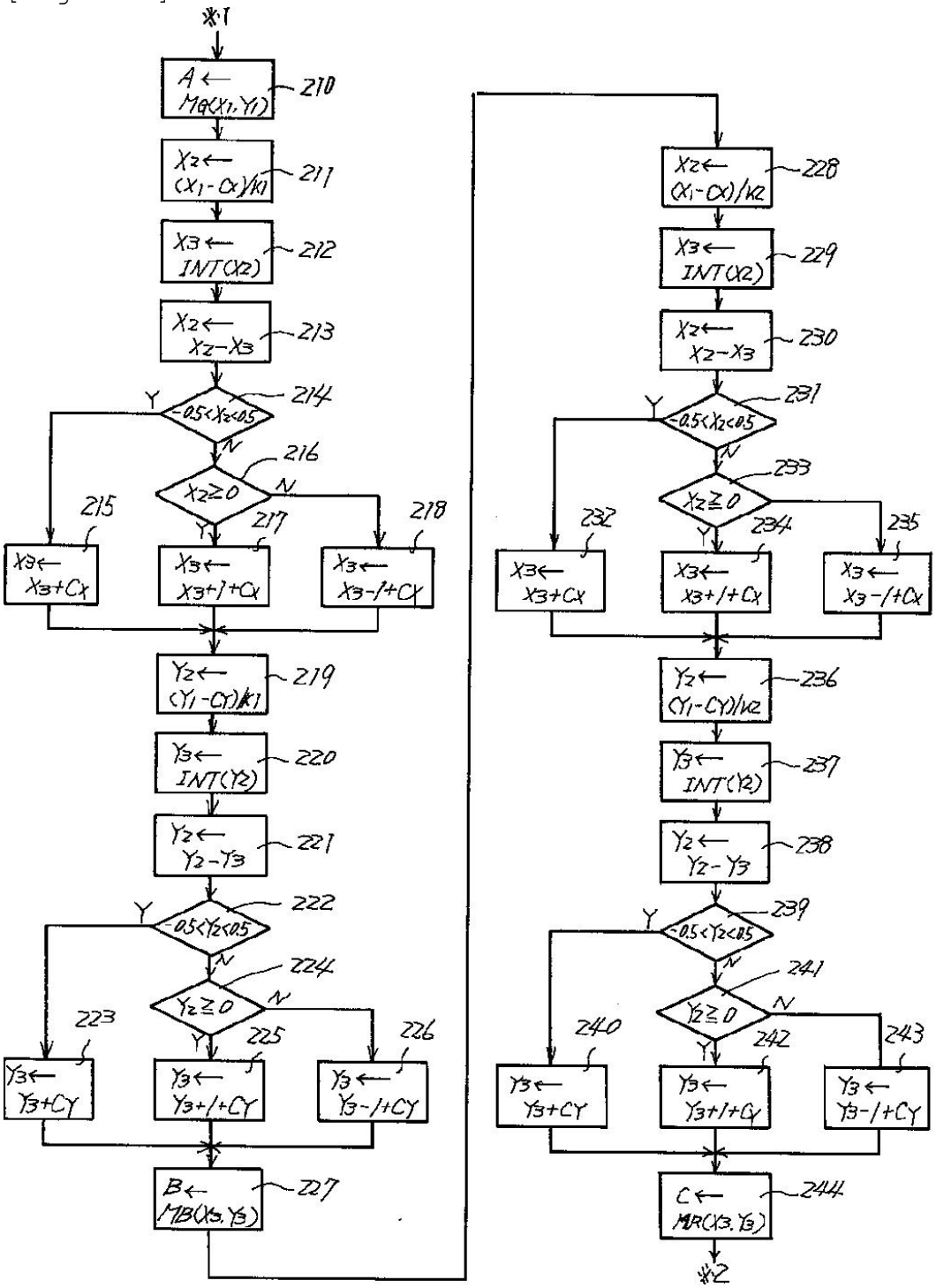
※1
A ← MG(X1, Y1)
210
X2 ← (X1 - CX)/K1
211
X3 ← INT(X2)
212
X2 ← X2 - X3
213
-0.5<X2<0.5
214
X2≧0
216
215
217
218
X3 ← X3+CX
X3 ← X3+1+CX
X3 ← X3-1+CX
Y2 ← (Y1 - CY)/K1
219
Y3 ← INT(Y2)
220
Y2 ← Y2 - Y3
221
-0.5<Y2<0.5
222
Y2≧0
224
223
225
226
Y3 ← Y3+CY
Y3 ← Y3+1+CY
Y3 ← Y3-1+CY
B ← MB(X3, Y3)
227
X2 ← (X1 - CX)/K2
228
X3 ← INT(X2)
229
X2 ← X2 - X3
230
-0.5<X2<0.5
231
X2≧0
233
232
234
235
X3 ← X3+CX
X3 ← X3+1+CX
X3 ← X3-1+CX
Y2 ← (Y1 - CY)/K2
236
Y3 ← INT(Y2)
237
Y2 ← Y2 - Y3
238
-0.5<Y2<0.5
239
Y2≧0
241
240
242
243
Y3 ← Y3+CY
Y3 ← Y3+1+CY
Y3 ← Y3-1+CY
C ← MR(X3, Y3)
244
※2

[Figure 9]

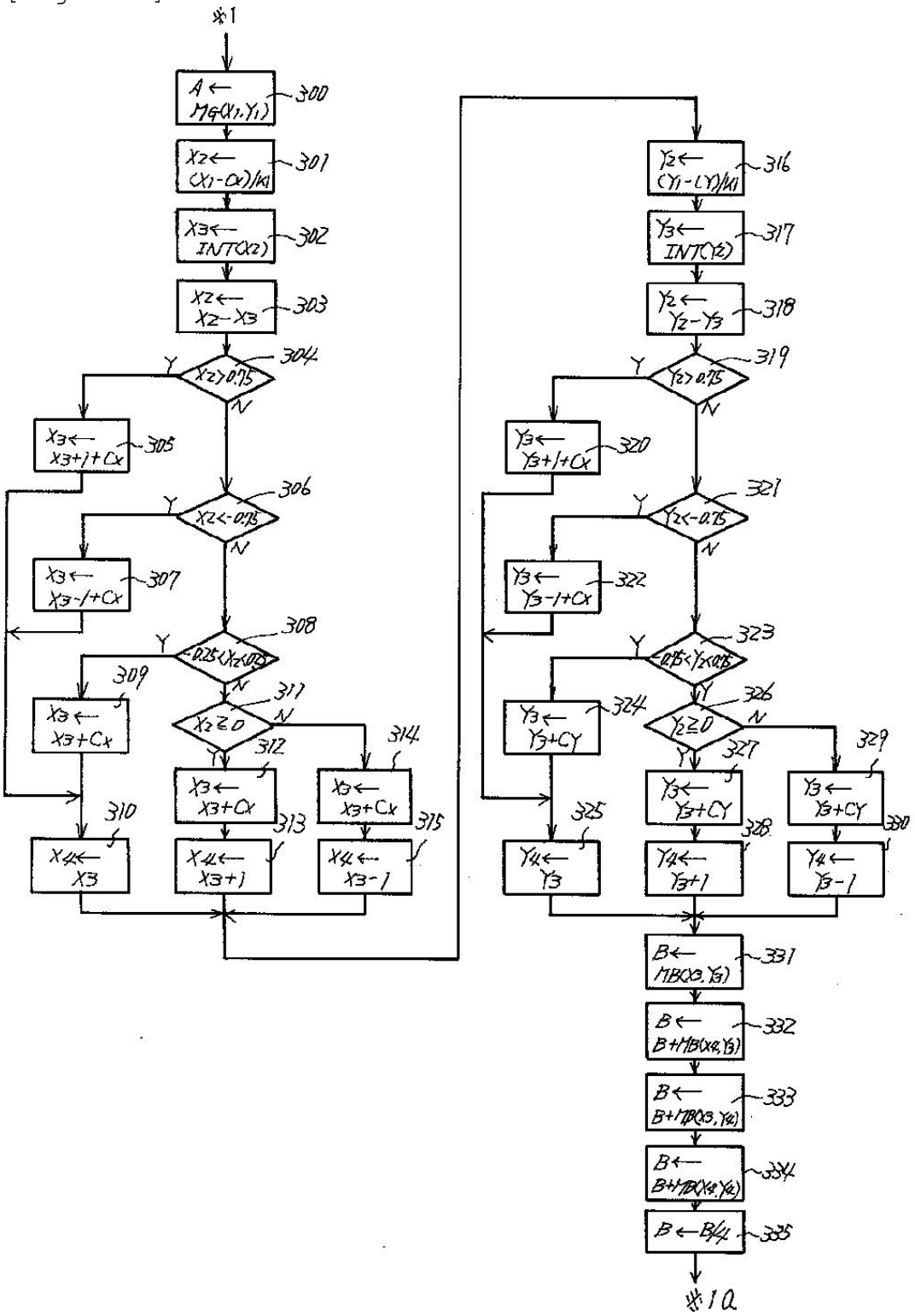
※1
A ← MG(X1, Y1)
300
X2 ← (X1 - Cx)/K1
301
X3 ← INT(X2)
302
X2 ← X2 - X3
303
X2 > 0.75
304
X3 ← X3+1+Cx
305
X2 < -0.75
306
X3 ← X3-1+Cx
307
-0.25 < X2 < 0.25
308
X3 ← X3+Cx
309
X4 ← X3
310
X2 ≧ 0
311
X3 ← X3+Cx
312
X4 ← X3+1
313
X3 ← X3+Cx
314
X4 ← X3-1
315
Y2 ← (Y1 - CY)/K1
316
Y3 ← INT(Y2)
317
Y2 ← Y2 - Y3
318
Y2 > 0.75
319
Y3 ← Y3+1+Cx
320
Y2 < -0.75
321
Y3 ← Y3-1+Cx
322
-0.25 < Y2 < 0.25
323
Y3 ← Y3+CY
324
Y4 ← Y3
325
Y2 ≧ 0
326
Y3 ← Y3+CY
327
Y4 ← Y3+1
328
Y3 ← Y3+CY
329
Y4 ← Y3-1
330
B ← MB(X3, Y3)
331
B ← B+MB(X4, Y3)
332
B ← B+MB(X3, Y4)
333
B ← B+MB(X4, Y4)
334
B ← B/4
335
※10

[Figure 10]

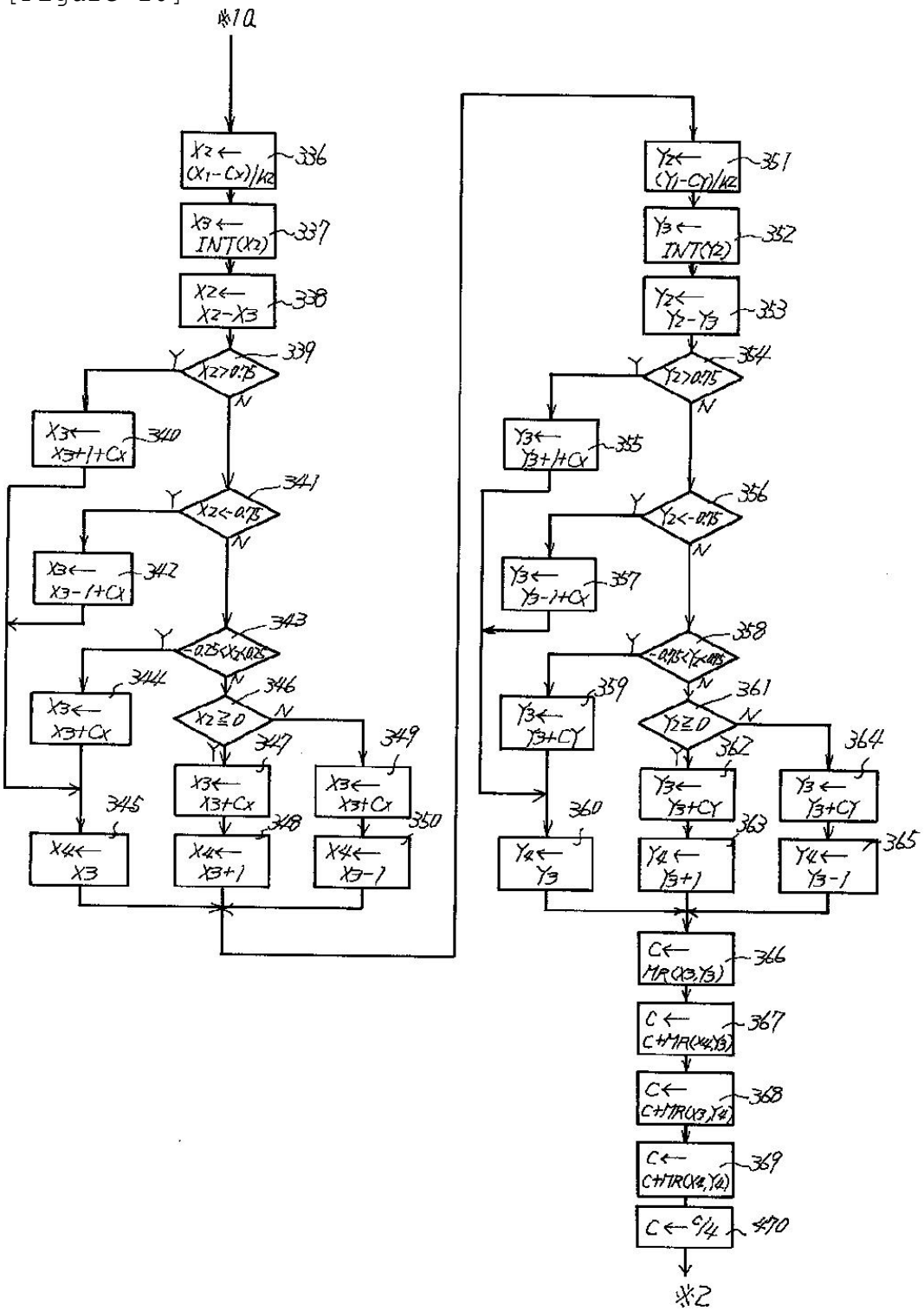
※1a
X2 ← (X1−Cx)/k2
336
X3 ← INT(X2)
337
X2 ← X2−X3
338
X2>0.75
339
X3 ← X3+1+Cx
340
X2<−0.75
341
X3 ← X3−1+Cx
342
−0.25<X2<0.25
343
X3 ← X3+Cx
344
X2≧0
346
X3 ← X3+Cx
347
X3 ← X3+Cx
349
X4 ← X3
345
X4 ← X3+1
348
X4 ← X3−1
350
Y2 ← (Y1−Cy)/k2
351
Y3 ← INT(Y2)
352
Y2 ← Y2−Y3
353
Y2>0.75
354
Y3 ← Y3+1+Cy
355
Y2<−0.75
356
Y3 ← Y3−1+Cy
357
−0.25<Y2<0.25
358
Y3 ← Y3+Cy
359
Y2≧0
361
Y3 ← Y3+Cy
362
Y3 ← Y3+Cy
364
Y4 ← Y3
360
Y4 ← Y3+1
363
Y4 ← Y3−1
365
C ← MR(X3,Y3)
366
C ← C+MR(X4,Y3)
367
C ← C+MR(X3,Y4)
368
C ← C+MR(X4,Y4)
369
C ← C/4
470
※2

[Figure 11]

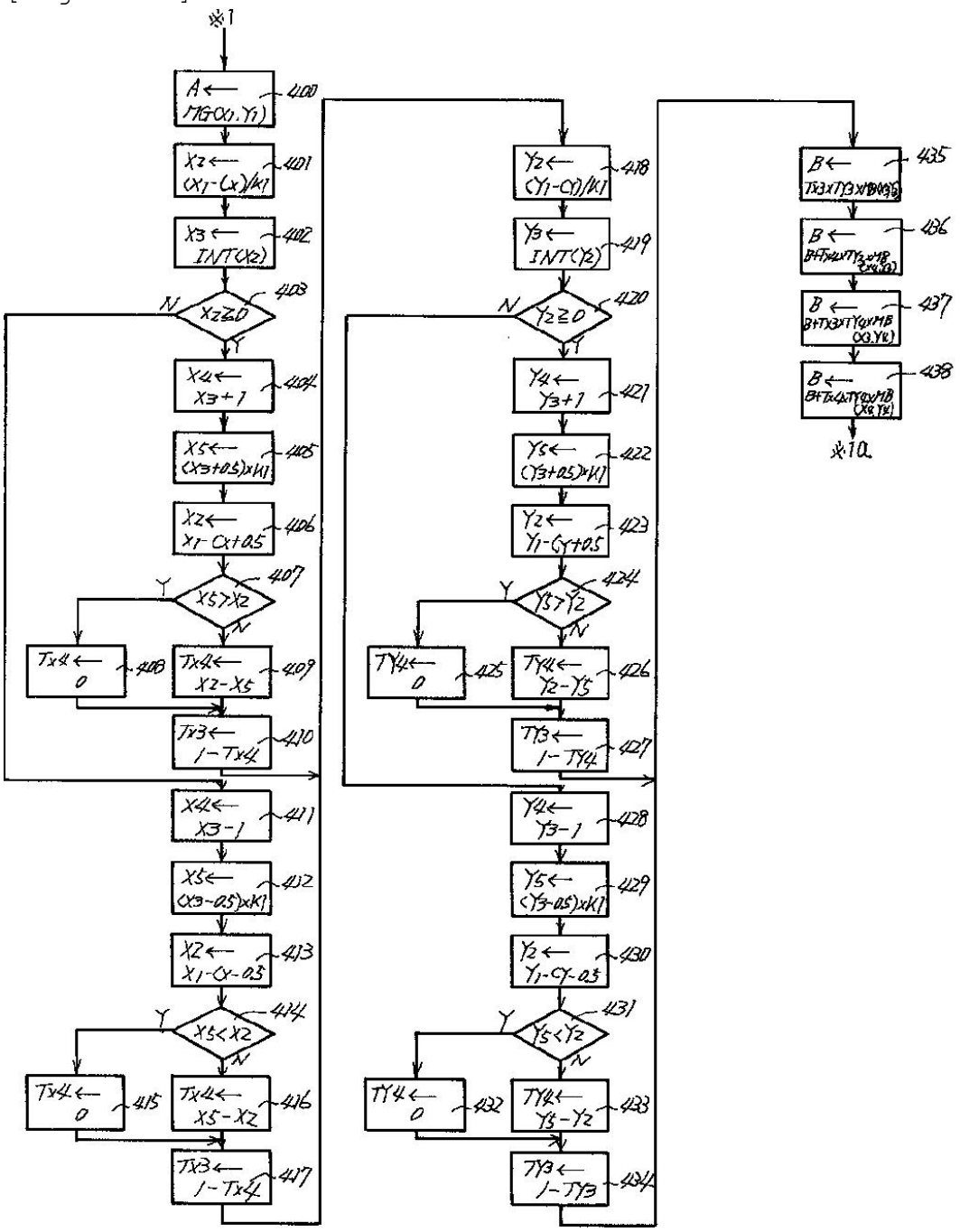
※1
400
401
402
403
404
405
406
407
408
409
410
411
412
413
414
415
416
417
418
419
420
421
422
423
424
425
426
427
428
429
430
431
432
433
434
435
436
437
438
※10

[Figure 12]

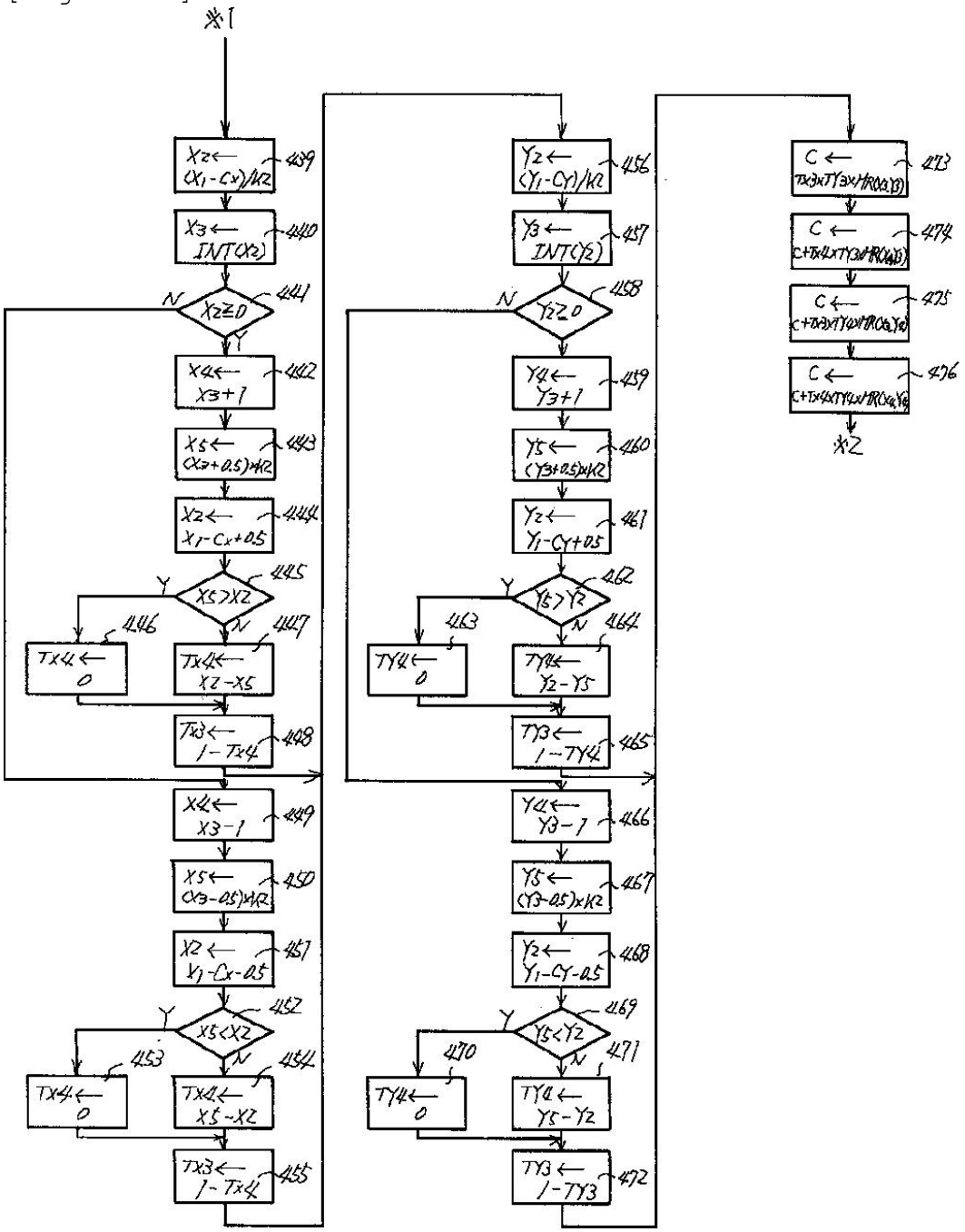
※1
X2 ← (X1 - Cx)/K2
439
X3 ← INT(X2)
440
X2≧0
441
N
Y
X4 ← X3+1
442
X5 ← (X3+0.5)×K2
443
X2 ← X1-Cx+0.5
444
X5>X2
445
Y
N
Tx4 ← 0
446
Tx4 ← X2-X5
447
Tx3 ← 1-Tx4
448
X4 ← X3-1
449
X5 ← (X3-0.5)×K2
450
X2 ← X1-Cx-0.5
451
X5<X2
452
Y
N
Tx4 ← 0
453
Tx4 ← X5-X2
454
Tx3 ← 1-Tx4
455
Y2 ← (Y1-Cy)/K2
456
Y3 ← INT(Y2)
457
Y2≧0
458
N
Y4 ← Y3+1
459
Y5 ← (Y3+0.5)×K2
460
Y2 ← Y1-Cy+0.5
461
Y5>Y2
462
Y
N
TY4 ← 0
463
TY4 ← Y2-Y5
464
TY3 ← 1-TY4
465
Y4 ← Y3-1
466
Y5 ← (Y3-0.5)×K2
467
Y2 ← Y1-Cy-0.5
468
Y5<Y2
469
Y
N
TY4 ← 0
470
TY4 ← Y5-Y2
471
TY3 ← 1-TY3
472
C ← Tx3×TY3×MR(X3,Y3)
473
C ← C+Tx4×TY3×MR(X4,Y3)
474
C ← C+Tx3×TY4×MR(X3,Y4)
475
C ← C+Tx4×TY4×MR(X4,Y4)
476
※2

DECLARATION OF JULIAN DAVID RIPPON

I, Julian David RIPPON,
translator to RWS Translations Ltd, of Europa House, Chiltern Park, Chiltern Hill, Chalfont St Peter, Buckinghamshire, United Kingdom, declare the following:

1. I am over 18 years of age and competent to make this declaration.

2. I am a qualified Japanese to English translator with more than 18 years of experience.

3. I have translated into English the attached document identified as "Japanese Unexamined Patent Application Publication No. JPH053568", bearing a publication date of January 8, 1993.

4. I affirm that the translated text has been translated and edited to the best of my ability and knowledge to accurately reflect the content, meaning, and style of the original text. I hereby certify under penalty of perjury under the laws of the United States of America that the foregoing constitutes, pursuant to my knowledge and belief, a true and correct translation of the original document.

5. I declare that all statements made herein of my knowledge are true, and that all statements made on information and belief are believed to be true, and that these statements were made with the knowledge that willful false statements and the like are punishable by fine or imprisonment, or both, under Section 1001 of Title 18 of the United States Code.

Date: July 10, 2024

Julian Rippon

J. D. RIPPON
For and on behalf of RWS Translations Ltd

Your ref: JPH053568A

In translating the above text we have noted the following apparent errors/unclear passages, which we have reproduced:

Page / para / line*	Comment
3/[0016], [0019]	These two sets of X and Y coordinates each appear to be inverted (ie given as (Y, X) instead of (X, Y)).
5/column 8/5	「２つの値」 (“two values”) should probably read 「２の値」 (“a value of 2”). Although this is an obvious mistake, it does change the meaning so has been reproduced.
7/column 11/14	「X_5レジスターの値が、X_2レジスターの値より小さい時は」 (“If the value of the X_5 register is less than the value of the X_2 register”) should probably read 「X_5レジスターの値が、X_2レジスターの値より小さくない時は」 (“If the value of the X_5 register is not less than the value of the X_2 register”) in line with step 414 of Figure 11.
10/Fig. 5 (a)	$\frac{m}{2}-1$ directly below the shaded area should probably read $\frac{m}{2}-1$ as in paragraph [0017].
10/Fig. 5 (a)	$\frac{n}{1}$ in the middle should probably read $\frac{n}{2}$