UNITED STATES PATENT AND TRADEMARK OFFICE

BEFORE THE PATENT TRIAL AND APPEAL BOARD

FUJIFILM Corporation, FUJIFILM North America Corporation,
Nikon Corporation, Panasonic Entertainment & Communication Co., Ltd.,
Olympus Corporation, OM Digital Solutions Corporation,

Petitioners,

v.

Optimum Imaging Technologies LLC,

Patent Owner.

Case IPR2024-01374

Patent No. 10,877,266

DECLARATION OF ROBERT L. STEVENSON
EX1003

TABLE OF CONTENTS

Page

I. INTRODUCTION 1
II. BACKGROUND AND QUALIFICATIONS 2
III. MATERIALS REVIEWED 7
IV. SUMMARY OF OPINIONS 9
V. UNDERSTANDING OF THE LEGAL STANDARD 10
VI. LEVEL OF ORDINARY SKILL IN THE ART 12
VII. CLAIM CONSTRUCTION 13
VIII. BACKGROUND ON THE STATE OF THE ART 13
- A. Digital Image Correction In Camera 13
- B. Storage of Correction Data 14
- C. Software Update 15
- D. Image Correction Data Update 16
- E. Wired Or Wireless Image Transmission 18
- F. Optical Aberration Corrections 19
- G. Focal Length 21
- H. Auto-Focus 22
- I. Aperture Settings 23
- J. Shutter Speed Settings 24
- K. Exposure Mode 26
- L. Depth of Field Adjustment 27
- M. ISO Settings 28
- N. Subject Type 30
- O. Filters Settings 30
- P. Fast Fourier Transform (“FFT”) 31
- Q. Dust on Image Sensor 32
- R. Dead Pixel on Image Sensor 33
- S. Digital Video Cameras 34

IX. OVERVIEW OF THE ’266 PATENT 35
A. Brief Description 35
B. Prosecution History 36
X. OVERVIEW OF THE PRIOR ART REFERENCES 37
A. Sarbadhikari 37
B. Katagiri 39
C. Iwasawa 40
D. Yamasaki 40
E. Gindele 41
F. Ito 41
G. Miyazawa 42
H. Hamilton 43
XI. GROUND 1: CLAIMS 1-2, 9-10, 20 AND 22-23 WOULD HAVE BEEN OBVIOUS IN LIGHT OF SARBADHIKARI AND KATAGIRI 44
A. Motivation to Combine 44
B. Claim 1 50
C. Claim 2 74
D. Claim 9 78
E. Claim 10 81
F. Claim 20 84
G. Claim 22 87
H. Claim 23 91
XII. GROUND 2: CLAIMS 2-10, 13-19, 24, 27 AND 30 WOULD HAVE BEEN OBVIOUS IN LIGHT OF SARBADHIKARI, KATAGIRI AND IWASAWA 92
A. Motivation to Combine 92
B. Claim 2 96
C. Claim 3 100
D. Claim 4 100

Ex. 1003, p. 3
FUJIFILM et al. v. OPTIMUM
IPR2024-01374

E. Claim 5 104
F. Claim 6 107
G. Claim 7 112
H. Claim 8 115
I. Claim 9 116
J. Claim 10 117
K. Claim 13 117
L. Claim 14 122
M. Claim 15 127
N. Claim 16 132
O. Claim 17 134
P. Claim 18 135
Q. Claim 19 136
R. Claim 24 136
S. Claim 27 137
T. Claim 30 137
XIII. GROUND 3: CLAIMS 8, 13 AND 27 WOULD HAVE BEEN OBVIOUS IN LIGHT OF SARBADHIKARI, KATAGIRI AND GINDELE 140
A. Motivation to Combine 140
B. Claim 8 144
C. Claim 13 152
D. Claim 27 154
XIV. GROUND 4: CLAIMS 11-12 AND 25-26 WOULD HAVE BEEN OBVIOUS IN LIGHT OF SARBADHIKARI, KATAGIRI AND YAMASAKI 154
A. Motivation to Combine 155
B. Claim 11 159
C. Claim 12 164
D. Claim 25 164

Ex. 1003, p. 4
FUJIFILM et al. v. OPTIMUM
IPR2024-01374

E. Claim 26 164

XV. GROUND 5: CLAIM 21 WOULD HAVE BEEN OBVIOUS IN LIGHT OF SARBADHIKARI, KATAGIRI AND ITO 165

A. Motivation to Combine 165

B. Claim 21 169

XVI. GROUND 6: CLAIM 28 WOULD HAVE BEEN OBVIOUS IN LIGHT OF SARBADHIKARI, KATAGIRI AND MIYAZAWA 171

A. Motivation to Combine 171

B. Claim 28 174

XVII. GROUND 7: CLAIM 29 WOULD HAVE BEEN OBVIOUS IN LIGHT OF SARBADHIKARI, KATAGIRI AND HAMILTON 177

A. Motivation to Combine 177

B. Claim 29 180

XVIII. SECONDARY CONSIDERATIONS.....183

XIX. CONCLUSION.....183

Ex. 1003, p. 5
FUJIFILM et al. v. OPTIMUM
IPR2024-01374

I. INTRODUCTION

1. My name is Robert L. Stevenson. I have been retained by counsel for Petitioners, Fujifilm Corporation, FUJIFILM North America Corporation, Olympus Corporation, OM Digital Solutions Corporation, Nikon Corporation and Panasonic Entertainment & Communication Co., Ltd. ("Petitioners") as an expert witness in this *inter partes* review to examine whether claims 1-30 of U.S. Patent No. 10,877,266 (EX0001, the "'266 patent") are patentable over certain prior art.

2. I have personal knowledge of all the facts set forth herein, and if called to testify at any hearing in this *inter partes* review, I would competently testify and verify that testimony contained herein.

3. I am being compensated at my hourly rate of $750 per hour. I am also being reimbursed for out-of-pocket expenses. My compensation does not depend in any way on the outcome of this proceeding or the particular opinions I express, or the testimony I give.

4. I expect to be available for deposition and to testify at the evidentiary hearing in this *inter partes* review to the extent required.

5. This declaration contains my conclusions and a summary of my analysis including a summary of my conclusions; an overview of my qualifications as an expert; an overview of the scope and terms of my engagement for this declaration; an overview of the materials I have considered in arriving at my

conclusions; an overview of the terminology and legal principles that I applied in my analysis; an overview of the technical background of the subject matter; an overview of the ’266 patent; an analysis of the level of ordinary skill in the art related to the ’266 patent; and an analysis of the asserted references; and a patentability analysis of the challenged claims.

6. This declaration is based on information currently available to me. I intend to continue my investigation and study, which may include a review of documents and information that may yet be produced, as well as deposition testimony from depositions for which transcripts are not yet available or that may yet be taken in this review. Therefore, I expressly reserve the right to expand or modify my opinions as my investigation and study continue, and to supplement my opinions in response to any additional information that becomes available to me, any matters raised by Patent Owner and/or other opinions provided by Patent Owner’s expert(s), or in light of any relevant orders from the Patent Trial and Appeal Board or other authoritative body.

II. BACKGROUND AND QUALIFICATIONS

7. My qualifications and professional experience are described in my Curriculum Vitae, a copy of which can be found in EX1077. The following is a brief summary of my relevant qualifications and professional experience.

8. I have a bachelor's degree in Electrical Engineering from the University of Delaware and a Ph.D. degree in Electrical Engineering from Purdue University. My Ph.D. research was on communications and signal processing.

9. I am presently a Professor in the Department of Electrical Engineering and in the Department of Computer Science and Engineering at the University of Notre Dame. I first joined the faculty at the University of Notre Dame as an Assistant Professor in the Department of Electrical Engineering in 1990. I was granted tenure and promoted to the rank of Associate Professor in August 1996. I attained the rank of Professor in the Department of Electrical Engineering in August 2002, and I continue to serve in that capacity. I have served concurrently as a Professor in the Department of Computer Science and Engineering at the University of Notre Dame from January 2003 through June 2018.

10. Since 2013 I have served as an Associate Chair of the Department of Electrical Engineering. I also serve as the Director of Undergraduate Studies in Electrical Engineering. In this role I oversee the department's undergraduate program in Electrical Engineering.

11. I spent the summer of 1992 at the Air Force Research Lab in Rome, New York and I spent the summer of 1993 at the Intel® Corporation in Hillsboro, Oregon. Several leading computing companies, including Intel®, Sun Microsystems®, Apple® Computer, and Microsoft®, have supported my research

at Notre Dame. During the past 20 years, I have published over 150 technical papers related to the field of image processing and digital systems.

12. I am a member of the Institute of Electronics and Electrical Engineers, The International Society for Optical Engineering, and the Society for Imaging Science and Technology. I am a member of the academic honor societies Eta Kappa Nu, Tau Beta Pi, and Phi Kappa Phi.

13. For the past 20 years my work has focused on the design of techniques, hardware, and software for the processing of digital signals using digital computing devices. As an academic researcher I attempt to develop novel ideas for systems, then publish and present those ideas to the technical community. My success as an academic is directly related to the insights and techniques that provide the basis for new generations of products. My early work on digital techniques for printing and image capture devices led to significant interaction with companies developing desktop computers products in the early 1990's as they tried to incorporate those ideas into their products.

14. My interaction with Apple's Imaging Group focused on various imaging devices such as digital cameras, scanners, and printers and how to best support those devices on desktop computers. At Intel, I worked in Intel's Architecture Lab at the time the MMX multimedia instructions were being incorporated into the Pentium processor. My work there dealt with developing

video compression techniques for CD-ROM's and network communications that were well matched to the Pentium architecture. I also gave a series of talks on how advanced communication and video processing techniques could be better supported on the Pentium platform. Similarly, my interaction with Sun Microsystem's group examined how advanced signal processing techniques could be best implemented using Sun's new Visual Instruction Set on the Sparc architecture.

15. I have also received significant support for my research from several U.S. Department of Defense Agencies. The Air Force Research Laboratory has funded my work to develop advanced parallel processing algorithms that exploited an ad-hoc network of mixed computers to achieve significant computational advantages over their previously implemented techniques. Other Department of Defense agencies have supported my work in image and video enhancement.

16. Through my work I have contributed significantly to the understanding and modeling of the limitations of and aberrations found in optical image capture systems. For example, I directed a Ph.D. dissertation entitled "Modeling, Approximation, and Estimation of Spatially-varying Blur in Photographic Systems" with my student John Simpkins and co-authored several papers in the 2011-2016 directly on the modeling of optical systems.

17. Additionally, I have developed numerous novel computational algorithms to overcome such issues with optical capture systems over the past 30 years. Some examples include "Improved Definition Image Expansion" (1994), "Color Palette Restoration" (1995), "Extraction of High-Resolution Frames from Video Sequences" (1996), "Reduced-Complexity Iterative Post-Filtering of Video" (2001), "Improving the Performance of Single Chip Image Capture Devices" (2003), "Estimation Theoretic Approach to Dynamic Range Improvement Through Multiple Exposures" (2003), "A Parameterized Spatially-Varying PSF Model" (2014), "Multi-Image Motion Deblurring Aided By Inertial Sensors" (2016), "Inertial Sensor Aided Multi-Image Nonuniform Motion Blur Removal Based on Motion Decomposition" (2018), "Deep Motion Blur Removal Using Noisy/Blurry Image Pairs" (2021), and "DeblurExpandNet: Image Motion Deblurring Network Aided by Inertial Sensor Data" (2022). These references were all published in peer referred international journals and have collectively been cited thousands of times in the field. I have also presented such work at international conferences around the world. Complete citations to this work can be found in my curriculum vitae.

18. I have published over 150 papers in international journals and international conferences. I am an inventor of U.S. Pat. No. 6,081,552, "Video Coding Using a Maximum A Posteriori Loop Filter," June 27, 2000.

19. Additional information concerning my background, qualifications, publications, conferences, honors, and awards are described in my Curriculum Vitae, a copy of which is attached with this declaration as Exhibit 1077.

III. MATERIALS REVIEWED

20. In reaching the opinions described in this declaration, I have relied on the documents and materials recited herein as well as those identified in this declaration, including the ’266 patent, the prosecution history of the ’266 patent, the prior art references, and information discussed and any other references specifically identified in this declaration, including the materials identified in the chart below.

Exhibit	Description
EX1001	U.S. Pat. No. 10,877,266 (“the ’266 patent”)
EX1002	Prosecution History of the ’266 patent
EX1003	Declaration of Dr. Robert L. Stevenson
EX1004	U.S. Pat. No. 5,477,264 (“Sarbadhikari”)
EX1005	Certified English Translation of Japanese Pat. App. Pub. No. 2000-41179 (“Iwasawa”)
EX1006	Certified English Translation of Japanese Pat. App. Pub. No. 2004-289225 (“Katagiri”)
EX1007	U.S. Pat. App. Pub. No. 2002/0113884 A1 (“Tanii”)
EX1008	Certified English Translation of Japanese Pat. App. Pub. No. 2005-25703 (“Yamada”)
EX1009	Certified English Translation of Japanese Pat. App. Pub. No. 2004-320567 (“Uchino”)
EX1010	International Pat. App. Pub. No. WO 2005/065283 (“Walker”)
EX1011	U.S. Pat. App. Pub. No. 2005/0001024 (“Kusaka”)
EX1012	U.S. Pat. App. Pub. No. 2006/0274170 (“Azuma”)
EX1013	U.S. Pat. App. Pub. No. 2004/0080621 (“Fisher”)
EX1014	Kodak EasyShare-One User’s Guide (“Kodak EasyShare”)

EX1015	U.S. Pat. No. 6,603,885 (“Enomoto”)
EX1016	U.S. Pat. No. 6,360,362 (“Fichtner”)
EX1017	U.S. Pat. App. Pub. No. 2004/0150726 (“Gallagher”)
EX1018	U.S. Pat. App. Pub. No. 2002/0135688 (“Niikawa”)
EX1019	U.S. Pat. No. 7,245,319 (“Enomoto II”)
EX1020	U.S. Pat. No. 5,227,832 (“Kawasaki”)
EX1021	U.S. Pat. App. Pub. No. 2005/0280877 (“Watanabe”)
EX1022	U.S. Pat. App. Pub. No. 2004/0239771 (“Habe”)
EX1023	U.S. Pat. App. Pub. No. 2004/0189825 (“Kawashima”)
EX1024	U.S. Pat. No. 5,596,387 (“Takagi”)
EX1025	U.S. Pat. App. Pub. No. 2002/0015111 (“Harada”)
EX1026	U.S. Pat. App. Pub. No. 2004/0263887 (“Kotani”)
EX1027	U.S. Pat. App. Pub. No. 2005/0168591 (“Proidl”)
EX1028	U.S. Pat. App. Pub. No. 2003/0071905 (“Yamasaki”)
EX1029	U.S. Pat. No. 4,453,811 (“Yamasaki II”)
EX1030	U.S. Pat. No. 5,510,837 (“Takei”)
EX1031	U.S. Pat. App. Pub. No. 2004/0005915 (“Hunter”)
EX1032	U.S. Pat. App. Pub. No. 2004/0109063 (“Kusaka II”)
EX1033	U.S. Pat. App. Pub. No. 2002/0044157 (“Wolf”)
EX1034	U.S. Pat. App. Pub. No. 2004/0201688 (“Wolf II”)
EX1035	U.S. Pat. App. Pub. No. 2005/0008236 (“Hachiyama”)
EX1036	U.S. Pat. App. Pub. No. 2003/0017846 (“Estevez”)
EX1037	U.S. Pat. No. 7,936,392 (“Ng”)
EX1038	Certified English Translation of Japanese Pat. App. Pub. No. H06-113309 (“Ito”)
EX1039	Prosecution History of U.S. Pat. No. 1,451,339 (the “’339 patent”)
EX1040	U.S. Pat. No. 7,683,950 (“Kelly”)
EX1041	U.S. Pat. No. 5,414,782 (“Carasso”)
EX1042	U.S. Pat. No. 4,903,204 (“Dobbins”)
EX1043	U.S. Pat. No. 6,791,608 (“Miyazawa”)
EX1044	U.S. Pat. App. Pub. No. 2002/0158977 (“Hamilton”)
EX1045	U.S. Pat. App. Pub. No. 2004/0080636 (“Dong”)
EX1046	U.S. Pat. No. 6,611,288 (“Fossum”)
EX1047	U.S. Pat. No. 5,805,216 (“Tabei”)
EX1048	U.S. Pat. App. Pub. No. 2002/0093577 (“Kitawaki”)
EX1049	U.S. Pat. App. Pub. No. 2006/0050158 (“Irie”)
EX1050	U.S. Pat. No. 5,382,976 A (“Hibbard”)
EX1051	U.S. Pat. App. Pub. No. 2001/0008418 (“Yamanaka”)
EX1052	U.S. Pat. No. 6,590,617 (“Kanai”)

EX1053	U.S. Pat. App. Pub. No. 2004/0179131 (“Honda”)
EX1054	U.S. Pat. No. 4,423,936 (“Johnson”)
EX1055	U.S. Pat. No. 6,151,171 (“Kenin”)
EX1056	U.S. Pat. App. Pub. No. 2004/0066980 (“Gindele”)
EX1057	U.S. Pat. App. Pub. No. 2003/0052988 (“Kurosawa”)
EX1058	U.S. Pat. No. 6,900,841 (“Mihara”)
EX1059	U.S. Pat. App. Pub. No. 2004/0228005 (“Dowski”)
EX1060	U.S. Pat. No. 6,920,443 (“Cesare”)
EX1061	U.S. Pat. No. 6,301,440 (“Bolle”)
EX1062	U.S. Pat. App. Pub. No. 2004/0032490 (“Uchida”)
EX1063	U.S. Pat. App. Pub. No. 2004/0165101 (“Miyanari”)
EX1064	U.S. Pat. App. Pub. No. 2005/0231615 (“Kitani”)
EX1065	U.S. Pat. No. 6,323,934 (“Enomoto III”)
EX1066	Japanese Pat. App. Pub. No. 2000-41179 (“Iwasawa-JP”)
EX1067	[Reserved]
EX1068	Japanese Pat. App. Pub. No. 2005-25703 (“Yamada-JP”)
EX1069	Japanese Pat. App. Pub. No. 2004-320567 (“Uchino-JP”)
EX1070	Japanese Pat. App. Pub. No. H06-113309 (“Ito-JP”)
EX1071	Japanese Pat. App. Pub. No. 2004-289225 (“Katagiri-JP”)
EX1072	Certified English Translation of Japanese Pat. App. Pub. No. H11-205652 (“Ichiyama”)
EX1073	Japanese Pat. App. Pub. No. H11-205652 (“Ichiyama-JP”)
EX1074	U.S. Pat. No. 3,522,764 (“Biber”)
EX1075	U.S. Pat. No. 5,752,115 (“McIntyre”)
EX1076	U.S. Pat. App. Pub. No. 2003/0098914 (“Easwar”)
EX1077	Curriculum Vitae of Dr. Robert L. Stevenson
EX1078	Sotera Stipulation

IV. SUMMARY OF OPINIONS

21. Ground 1: Claims 1-2, 9-10, 20 and 22-23 are obvious in light of Sarbadhikari and Katagiri.

22. Ground 2: Claims 2-10, 13-19, 24, 27 and 30 are obvious in light of Sarbadhikari, Katagiri and Iwasawa.

23. Ground 3: Claims 8, 13 and 27 are obvious in light of Sarbadhikari, Katagiri and Gindele.

24. Ground 4: Claims 11-12 and 25-26 are obvious in light of Sarbadhikari, Katagiri and Yamasaki.

25. Ground 5: Claim 21 is obvious in light of Sarbadhikari, Katagiri and Ito.

26. Ground 6: Claim 28 is obvious in light of Sarbadhikari, Katagiri and Miyazawa.

27. Ground 7: Claims 29 is obvious in light of Sarbadhikari, Katagiri and Hamilton.

V. UNDERSTANDING OF THE LEGAL STANDARD

28. I have been instructed as to the definition of "anticipation" in the context of the patent laws. I understand that for a claim to be invalid as anticipated, all of the features of that claim must be present in a single previous device/system or method that was known of, used, or described in a single previous printed publication or patent. To anticipate the invention, the prior art does not have to use the same words as the claim, but all of the features of the claim must have been disclosed, either stated expressly or implied to a person having ordinary skill in the art in the technology of the invention, so that looking at that one reference, that person could make and use the claimed invention.

29. I have been instructed as to the definition of "obviousness" in the context of the patent laws. It is my understanding that even though an invention may not have been identically disclosed or described before it was made by an inventor, in order to be patentable, the invention must also not have been obvious to a person of ordinary skill in the art ("POSA") before the date of the alleged invention (which in these proceedings I am assuming to be July 11, 2006).

30. I understand that obviousness is a question of law based on underlying factual issues including the level of ordinary skill in the art at the time of the patent's alleged invention, the scope and content of the prior art, and any differences between the prior art and the claimed invention.

31. I understand that the scope and content of prior art for deciding whether the invention was obvious includes at least prior art in the same field as the claimed invention. The prior art can also come from different fields that a POSA would have considered when trying to solve the problem that is addressed by the invention.

32. I understand that the existence of each and every element of the claimed invention in the prior art does not necessarily prove obviousness. Most, if not all, inventions rely on building blocks of prior art. But, in considering whether a claimed invention is obvious, I understand that one may find obviousness if, at the time of the patent's alleged invention, there was a reason that would have

prompted a POSA to combine the known elements in a way the claimed invention does, taking into account such factors as (1) whether the claimed invention was merely the predictable result of using prior art elements according to their known function(s); (2) whether the claimed invention provides an obvious solution to a known problem in the relevant field; (3) whether the prior art teaches or suggests the desirability of combining elements claimed in the invention; (4) whether the prior art teaches away from combining elements in the claimed invention; (5) whether it would have been obvious to try the combinations of elements, such as when there is a design need or market pressure to solve a problem and there are a finite number of identified, predictable solutions; and (6) whether the change resulted more from design incentives or other market forces.

33. To find that the prior art renders the invention obvious, I understand that one must find that the combinations of the prior art could have been completed by a POSA with a reasonable expectation of success. I also understand that it is impermissible to find obviousness based on hindsight reasoning, i.e., starting backwards from the patent's claims to stitch together the prior art.

VI. LEVEL OF ORDINARY SKILL IN THE ART

34. All of the opinions that I provide herein are provided through the lens of a person having ordinary skill at the time the claim invention was made, which I understand is potentially as early as July 11, 2006 (the earliest priority date

identified on the face of the ’266 patent). In my opinion, a person of ordinary skill in the art (“POSA”) at the relevant time would have had a bachelor’s degree in electrical engineering, physics, or a related field, with at least two years of industry experience and/or research, both concerning digital camera system design and image processing.

VII. CLAIM CONSTRUCTION

35. For the purpose of this declaration, all claim terms should be given their ordinary meaning to a POSA.

VIII. BACKGROUND ON THE STATE OF THE ART

36. The ’266 patent relates to digital image processing. It describes digital techniques carried out within a digital camera for correcting imperfections in images due to characteristics of (1) the lens used to capture an image, (2) the image sensor, and (3) the scene or subject being photographed.

37. It further describes updating software and correction data stored in a database for processing image corrections, and wirelessly transmitting the corrected images from the digital camera to an external device.

A. Digital Image Correction In Camera

38. It was known before the date of the alleged invention of the ’266 patent that image correction may be performed in a digital camera using in-camera hardware and software. *See e.g.*, EX1004, 2:33-35 (teaching that “[a]n electronic

camera can use a programmable digital processor controlled by software), 1:65-2:2 (teaching that "the camera contains EPROM memory with code for in-camera white balance and gamma correction and also stores the compiled code which is used (by the computer) to operate the camera and to process the images from sensor color filter array to obtain a full resolution, color corrected image"); EX1017, [0002], [0021], [0022], Fig. 1 (teaching a digital camera that can perform "digital image processing methods for correcting and reducing image degradation due to deterministic problems related to image capture" and the processing methods can be "implemented in a combination of software and/or hardware").

B. <u>Storage of Correction Data</u>

39. It was known before the date of the alleged invention of the '266 patent that image correction may be performed in a digital camera using on-board processing. And correction data or information for image correction can be stored in the camera lens itself, the camera body, or in devices connected to the camera. *See e.g.*, EX1020, 3:65-4:4, 4:65-5:2, 19:39-45 (teaching that "aberration correction data A corresponding to the focal length f and/or the aperture Av is calculated in accordance with the function corresponding to the aberration characteristics and the data f0, f1, a and b on the lens side, and the calculated aberration correction data is then transferred to the camera body" and such correction data is "stored in the ROM 30A" in the lens CPU 30); EX1004, 4:58-5:10 (teaching that "image

processing software, look-up tables, matrices, dynamic range optimization tables, and other files capable of affecting the captured image data can be included in the digital storage device"); EX1005, [0021] (teaching that "quick and accurate shading correction can be performed by performing shading correction by calculating shading correction data using the CPU 206 and writing to rewritable recording means, for example, the RAM 208, reading out shading correction data in response to an imaging signal read out from the CCD 202, and multiplying the imaging signal by a digital signal that has undergone A/D conversion"); EX1015, 24:1-7, 23:27-38, 23: 49-53, 54:25-31 Figs. 3 and 11 (teaching an "image processing apparatus 14" that can be directly connected to a digital camera and the "image processing apparatus 14" in which "the correction coefficient storing subsection 138A stores the chromatic aberration of magnification and distortion correcting coefficients for each taking lens type recognizing code").

C. <u>Software Update</u>

40. The '266 patent teaches that "[it] is particularly important to both manufacturer and user because the ability to update software capability periodically will protect a user from needing to upgrade major hardware such as with a lens replacement." EX1001, 29:20-24.

41. The importance of having ability to update software in a camera was well-known in the art. *See* EX1004, 2:28-38 ("It is well known that computer

programs are updated more regularly than computer hardware, since the software can be refined to provide higher performance (i.e. better image quality) or more features while using the same hardware" and "[a]n electronic camera can use a programmable digital processor controlled by software" and "[s]uch a camera offers an opportunity for software updates, if the system is designed to facilitate such updates"); EX1005, [0019] ("The CPU 206 has a program for calculating shading correction data in response to a control signal from the optical lens 201, and further has a program input 212 that can input a program from the outside, wherein a program corresponding to the scene of the subject can be used, and it is possible to freely switch the program for calculating shading correction data").

D. <u>Image Correction Data Update</u>

42. It was well-known in the art before the date of the alleged invention of the '266 patent that a digital camera can receive, store and implement updated correction data for processing image data. *See* EX1015, 54:52-65 (teaching that "[t]he correction coefficient setting section 138, may optionally have a correction coefficient supply subsection 138C for updating the correction coefficients in correction formulae that are stored for each lens type recognizing code in the correction coefficient storing subsection 138A for correcting aberrations such as chromatic aberration of magnification and distortion; in this case, correction coefficients for new lens types can be updated from the correction coefficient

supply subsection 138C into the correction coefficient storing subsection 138A by means of various storage media such as an FD (floppy disk), an MO (magneto-optical disk) and Zip"); EX1016, 1:29-37, 2:24-38 (disclosing upgrade of the host software and/or the camera firmware with a new release of software or firmware for "bug" fixes, enhancements to algorithms, updated color sensing, updated compression, new protocols for accessing and formatting the storage medium, and so forth); EX1006, [0012], [0013], [0015], [0027], [0051], [0082] (teaching camera which can receive updated processing program (e.g., white balance, gamma correction, YC conversion, zooming, pixel number conversion, image size modification, sharpness correction, profile correction, contrast correction) and updated information for the processing program (e.g., opening screen setting command, copyright setting command, wipe setting command, gamma correction command) from a removable storage medium and store the updated processing program and information in a non-volatile memory, e.g., EEPROM);EX1017, [0003], [0019], [0025], [0028], [0032] Figs. 2 and 3 (teaching a process of finding or updating correction parameters 18 stored in correction database 26 used by image processing algorithm 22 to remove or reduce degradation present in digital image).

E. Wired Or Wireless Image Transmission

43. A camera user usually transmits captured images to an external computer device for various purposes such as viewing the captured image on an external display. The medium for image transmission between a camera and an external device can be a wired cable, a removable storage that has communication interface with both the camera and the external device, or a wireless network.

44. Using wireless or wired connection to send and receive image data between a camera and an external device was well-known in the art before the date of the alleged invention of the ’266 patent. *See* EX1006, [0020]-[0025], [0082]-[0083], [0087]-[0088], Fig. 1, (teaching a camera 2 that communicates with, and sends corrected images to, a controller 3 via a network configurable as a wireless LAN, an Ethernet LAN, a direct connection, etc.); EX1008, [0044] (teaching a camera having communication interface with an external device in compliance with both wired communication protocols (e.g., IEEE 1394, Ethernet) and wireless communication standards (e.g., IEEE802.11x, Bluetooth) that can control wired or wireless communication process with other devices through the internet); EX1009, [0009], [0011], [0016], [0019], [0025], [0027], [0031]-[0033], [0036], [0046], [0054], [0056]-[0058] (disclosing a camera that can transmit image data to an external display via a wired network cable (100a) or a wireless communication interface in compliance with the IEEE 802.11b and IrDA (Infrared Data Associate)

standards); EX1010, [0173], [0176], [0180] (teaching an imaging device that may transfer images to an external computing device through "a wired or wireless medium" such as "a local area network (LAN), a wide area network (WAN), the Internet, a telephone line, a cable line, a radio channel, an optical communications line, and a satellite communications link" and "Ethernet (or IEEE 802.3), SAP, ATP, Bluetooth™, IEEE 802.11, CDMA, TDMA, ultra- wideband, universal serial bus (USB), and TCP/IP"); EX1011, [0015], [0157], [0158] (teaching an electronic camera that can transmit image data to another image display terminal such as portable telephone through a wired or wireless communication function such as Bluetooth); EX1012, [0292], [0306] (teaching an image transmitter 2604 transmitting image data to an image receiver through a wireless or wired communication) (emphasis added); EX1013, [0011], [0026], [0034] (teaching a camera 108 that can be connected to an external device 102 via industry communication means such as direct cable means or wireless LAN and Bluetooth);EX1017, [0020], [0022], Fig. 1 (teaching a camera that can be either "physically connected" to an external device or via a "wireless connection").

F. <u>Optical Aberration Corrections</u>

45. All real lenses produce images with various combinations of distortions and artifacts. These generally are called "aberrations." Designers of lenses do what they can to minimize aberrations, but must balance that desire to

minimize aberrations against issues of size, complexity, and cost of the designed lens. The corrections may relate to known lens issues. These include, in part, the five Seidel aberrations, known to lens designers since their mathematical description was published in 1857 by Ludwig von Seidel. The Seidel aberrations are (1) spherical, (2) comatic, (3) astigmatism, (4) curvature of field, and (5) distortion.

46. These and other image defects arising due to the construction of the lens was well known before the date of the alleged invention of the ’266 patent to developers and inventors of digital image correction systems. *See* EX1019, 2:10-14 (“It is preferable that the image quality deterioration corrected by the lens characteristic correction unit is at least one of a chromatic aberration of magnification, a distortion aberration, defocusing and a decrease in marginal lumination”); EX1020, 2:14-25 (“The photographing lens includes a memory means for storing function data on the aberration correction peculiar to the photographing lens, an arithmetic operating means for calculating necessary aberration correction data in accordance with the aberration correction function data stored in the memory means, and an output means for outputting the calculated aberration correction data to the camera body”); EX1017, [0027] (“The parameter determiner 16 finds correction parameters 18 that can be used by an image processing algorithm 22 to correct for an image capture degradation, such as

lens falloff (sometimes called marginal attenuation), lens distortion, and lateral color aberration, or defocus").

G. <u>Focal Length</u>

47. The distance from the center of the lens to the image focal point (i.e., image sensor surface) is known as the focal length. As focal length changes, the amount of the subject captured by the lens also changes.

48. Before the date of the alleged invention of the '266 patent, it was well-known in the art to use image correction data corresponding to user-adjustable focal length of a lens to process image corrections. *See* EX1018, [0058], [0060], [0084], [0177] (teaching that the focal length of a lens is user adjustable and a shading correction circuit 123 that can perform a shading correction with reference to a plurality of correction tables stored in the shading ROM 1532 for different optical conditions such as focal length at the time of imaging); EX1019, 2:59-60, 3:5-10, 4:16-20, 4:29-33, 6:23-30, 6:47-52, 8:27-41 (teaching a camera that can correct aberrations based on lens characteristics corresponding to lens data (e.g., switchable focal length) stored for every interchangeable lens, and in case of a zoom lens for a plurality of focal lengths); EX1017, [0025] (teaches a camera that can use user-adjustable focal length as a type of image capture metadata to find or match, or generate appropriate correction parameters stored in the correction database to correct images); EX1020, 3:65-4:4, 5:10-24, 7:56-64, 11:34-

46(teaching a camera that can perform aberration correction based on aberration correction data corresponding to photographer-adjustable focal length of lens).

H. <u>Auto-Focus</u>

49. Autofocus (AF) is the function of a camera to automatically focus on a subject. Manual focus (MF) is the function to let the photographer adjust the focus manually instead of the camera. Although autofocus (AF) shooting is more typical in digital cameras, manual focus is effective when focusing is difficult with autofocus.

50. Before the date of the alleged invention of the ’266 patent, it was also well-known in the art that in-camera auto-focus process is better than manual focus adjustment in terms of ease of use, speed and accuracy. *See* EX1074, 1:8-2:21 (teaching an in-camera auto-focus mechanism that makes “moving objects may be photographed with relatively ease” because “[t]he manual dexterity requisite to converging optically upon a moving target is often beyond human ability”); EX1075, 1:23-55, 5:54-6:30, Fig. 2 (teaching an autofocus camera in which lens focus motor 60 and controller 40 perform autofocus within the camera and such autofocus system helps users adjust focus faster and easier “without looking through the viewfinder at all”). It was also well-known in the art before the date of the alleged invention of the ’266 patent to perform image corrections for captured images based on correction data corresponding to individual focus or focal point

automatically adjusted by the auto-focus process. *See* EX1018, [0090], [0101], [0109], [0110], [0158], Figs. 8 and 9 (teaching a camera with auto-focus capabilities that performs shading corrections using "tag information" such as "camera name, a lens name, a focal length at the time of exposure, an f-number at the time of exposure, an exposure mode, a *focal point*…" to find appropriate correction table from a shading ROM 153)(emphasis added); EX1020, 1:7-10, 2:26-31; 3:48-64, 4:65-5:2, 7:56-64, 3:65-4:4, 5:10-24, 7:56-64, 11:34-46 (teaching an auto-focus process that can be performed by an in-camera AF motor and the camera that can perform aberration corrections based on aberration correction data corresponding to focal point); EX1021, [0035], [0047], [0070], [0085], [0087], [0090], [0092] (teaching a digital camera with an auto focus mechanism that can perform aberration corrections based on correction values in accordance with focusing points and zoom positions stored in a database (e.g., tables or image recording apparatus).

I. <u>Aperture Settings</u>

51. Most camera lenses incorporate an aperture (often realized as an iris diaphragm) which can be opened or closed to varying degrees to control the overall amount of light taken in by the lens. Some cameras permit the user to adjust the aperture, but most current cameras, especially simpler ones, adjust the aperture automatically.

52. The aperture setting of a lens is typically described by an "f-number" or "f-stop" which is the ratio of the lens' focal length to the diameter of the aperture. Larger f-numbers describe smaller aperture settings, which allow less light through the lens to form the image.

53. Before the date of the alleged invention of the '266 patent, it was well-known in the art that aperture settings are user-adjustable image capturing parameters. *See* EX1004, 5:11-15, 7:16-23, 7:38-50 (teaching a camera with user-adjustable aperture value); EX1005, [0008], [0020], [0027] (teaching that "[t]he shading correction in this image input device stores the shading correction data corresponding to one or more conditions of the aperture value, the zoom position, and the lens type of the optical lens in the RAM 208"); EX1017, [0025], [0033] (teaches a camera that can use user-adjustable focal length, aperture value as image capture metadata to find or match, or generate appropriate correction parameters stored in the correction database to correct images); EX1059; [0007], [0012], [0022], [0032], [0035], [0036], [0055] (teaching a camera with adjustable aperture setting that may change depth of field).

J. <u>Shutter Speed Settings</u>

54. In a digital camera, shutter speed or exposure time is the length of time that the digital sensor inside the camera is exposed to light when taking a

photograph. The amount of light that reaches the image sensor is proportional to the exposure time.

55. Before the date of the alleged invention of the ’266 patent, it was well-known in the art to perform image corrections based on user-adjustable shutter speed. *See* EX1018, [0101], [0109], [0110], [0158] (teaching a camera that performs shading corrections using “tag information” such as “camera name, a lens name, a focal length at the time of exposure, an f-number at the time of exposure, an *exposure mode*, a focal point…” to find appropriate correction table from a shading ROM 153 and that the exposure mode (i.e., normal exposure mode and gradation control process mode) that varies shutter speed settings is user-adjustable); EX1005, [0008], [0015], Fig. 1 (teaching that the aperture value, the zoom position, and the lens type of the optical lens can be changed and the shading correction can be performed automatically following the changes of these parameters); EX1062, [0028],[0049], [0087], [0091], [0092], [0137] Figs. 4 and 6 (teaching a digital camera performing shading correction using prestored correction data when a specific shutter speed value is detected); EX1064, [0032], [0051], [0088]-[0090], Figs. 3 and 5 (teaching a digital camera performing shading correction using prestored correction data when a specific shutter speed value is detected).

K. <u>Exposure Mode</u>

56. In a digital camera, exposure is the amount of light per unit area reaching the surface of an image sensor. Exposure depends on shutter speed, lens F-number (aperture). In manual mode, the photographer adjusts the lens aperture and/or shutter speed to achieve the desired exposure. In automatic exposure (auto exposure or AE) mode, these parameters are adjusted automatically in the camera.

57. The auto exposure technology used in a camera as an image capturing setting was well-known before the date of the alleged invention of the ’266 patent. *See* EX1024, Abstract (teaching “[a]n auto-exposure device of a camera which can generate a photograph which fits to an image of a photographing time band in the photographing of an evening scene, a morning scene and so on”); EX1029, Abstract (teaching “[a]n automatic exposure controller for camera permits a free selection between a spotwise photometry, an auto-mode and a manual photographing mode”); EX1030, Abstract, (teaching “[a]n automatic exposure control device comprising a light measuring circuit for performing a weighted light measurement for a light measuring area set in a predetermined position within an image sensing plane, a discrimination circuit for detecting and evaluating the level of a luminance component in a video signal in each of a plurality of detecting areas set within the image sensing plane and for discriminating a photographic state while tracking a subject, and a compensation circuit for compensating a light

measurement control signal produced by the light measuring circuit in accordance with a discriminating result made by the discriminating circuit"); EX1018, [0058], [0074], [0084], [0101], [0134], [0135], Figs. 8, 9 and 14 (teaching a normal exposure mode and a gradation control processing mode, which is the auto-exposure mode, in a digital camera). It was also well-known in the art before the date of the alleged invention of the '266 patent that auto-exposure helps users adjust proper exposure parameters faster and easier than manual exposure adjustment. EX1076, [0009] (teaching a digital camera with an auto exposure process that "is a feature desired by many camera users, particularly those that are not photography experts, as automatic exposure control enables users to take photographs without having to manually adjust the lens aperture and shutter speed (exposure time)").

L. <u>Depth of Field Adjustment</u>

58. The depth of field (DOF) is the distance between the nearest and the furthest objects that are in acceptably sharp focus in an image captured with a camera. Depth of field (DOF), as the '266 patent explains, is "dependent on the aperture setting of the lens[.]" EX1001, 13:38-40.

59. Before the date of the alleged invention of the '266 patent, it was well-known in the art that exposure parameters such as aperture, which determines depth of field when image is being captured, is adjustable. *See* EX1044, [0019],

[0020], [0024] (teaching that a control processor 20 generally controls the input section 2 of the camera by initiating and controlling exposure by opening the diaphragm (i.e., aperture) and shutter [speed] in the exposure section 10); EX1022, [0019], [0021] (teaching that an exposure control circuit 5 executes a photographing operation (exposure) by driving a shutter and an aperture); EX1018, [0090], [0103] (teaching that a special imaging controller 158 changes the exposure time of the CCD 303 which corresponds to the shutter speed, and that a diaphragm control circuit 131 drives the diaphragm 302 and sets the amount of aperture); EX1028, [0003] (teaching that "the depth of field can be changed by variously selecting the combinations of apertures and shutter speeds and, as a result, the blur effect of objects other than a principal object can be freely controlled").

M. <u>ISO Settings</u>

60. In a camera, ISO is a numerical measure of the sensitivity of the image receiver, whether film or digital. *See e.g.*, EX1022, [0022]. In a digital camera, ISO is adjusted by changing the gain of the amplifier receiving the electrical signal from the CCD image sensor. *Id*.

61. Before the date of the alleged invention of the '266 patent, it was well-known in the art that ISO can be changed automatically, or in response to a user adjustment. *See e.g., id*., [0021] (teaching that "[u]nder normal

circumstances, the *CPU 1 sets the ISO speed in conformance to a photographer operation* and calculates an exposure value (an aperture value and a shutter speed) based upon the ISO speed that has been set and the photometering output from the photometering circuit 2" and "if the blur preventing mode has been set, it calculates the exposure value by *automatically adjusting the ISO speed* setting as appropriate for the circumstances[.]")(emphasis added); EX1023, [0032], [0034], [0038], [0040] (teaching that "*[t]he user can select* the intended image quality *by adjusting* the three items: the color reproducing condition, *the ISO sensitivity*, and the number of recording pixels in the image quality selection screen 31") (emphasis added). Before the date of the alleged invention of the '266 patent, it was also well-known in the art to use ISO settings to perform image corrections (including shading correction) for captured images. *See* EX1062, [0027], [0028], [0030], [0049] (teaching an electronic camera that performs horizontal dark shading correction using correction data prestored in a nonvolatile memory corresponding to various parameters including ISO speed); EX1063, [0040], [0062], [0169]-[0178] (teaching an electronic camera that has a nonvolatile memory storing one-dimensional dark fixed pattern noise correction data corresponding to each ISO sensitivity); EX1064, [0032], [0051] (teaching an electronic camera that performs horizontal dark shading correction using prestored

correction data corresponding various parameters including setting values for ISO sensitivity).

N. Subject Type

62. Many cameras can process images depending on subject type based on user's selection.

63. Before the date of the alleged invention of the '266 patent, it was well-known in the art that a camera user can select the scene classification corresponding to the subject type of the scene. *See* EX1061, 2:67-3:13, 5:66-6:8, Fig. 3 (teaching a camera with a "guided mode" that user is prompted with choices based on scene components detected in the image (e.g., faces, buildings, vegetation, etc.); EX1004, 8:50-9:1 (teaching an electronic camera that can modify captured images using user-adjustable control parameters and processing algorithms depending on specific subject type such as portraits); EX1005, [0021] (teaching an electronic camera that can perform shading correction based on shading correction data corresponding to the scene of the subject).

O. Filters Settings

64. Many digital cameras or image processing devices allow users to select the desired effect filter to achieve more impressive and artistic images.

65. Before the date of the alleged invention of the '266 patent, it was well-known in the art to use user-adjustable filter settings to correct captured

images. *See* EX1061, 2:31-33, 2:37-40, 7:54-61 (teaching an electronic camera teach user-adjustable filters including dynamic controllable filer, vegetation, color balance and contrast adjustments); EX1026, [0006], [0038], [0059], [0061], [0066], [0074]-[0092], Figs. 2 and 7 (teaching an image processing device with a menu that allows user to select various filters including "color tone correction", "sharpness", "noise removal", "image size", and "display magnification," "brightness" and "contrast" to correct images taken by a digital camera); EX1027, [0030], [0032] (teaches a camera with a filter selection button used by the user to select digital filer types including fog filter, motion blur filter, graded blue sky filter).

P. <u>Fast Fourier Transform ("FFT")</u>

66. Fast Fourier Transform is known as a filter used in digital cameras to improve image qualify.

67. Before the date of the alleged invention of the '266 patent, it was well-known in the art to use FFT to process image corrections. *See* EX1038, [0010], [0017], [0020] (teaching a digital video camera which applies a fast Fourier transform to performs chromatic aberration corrections based on the correction values stored in memory corresponding to focal length); EX1037, 2:30-32, 5:5-11, 6:2-8, 20:67-21:3, 23:59-24:4, 17:51-18:4, 18:5-22, 19:47-20:15, Fig. 22 (teaching that the image data may be processed in the frequency domain using a

"Fast Fourier Transform (FFT) algorithm and the FFT is used to refocus the image at different, user-specified depths); EX1040, Abstract, 1:7-11, 1:31-49, 3:1-12, 6:3-20, 9:36-67 (teaching a filter used to correct chromatic aberrations in image taken by a camera using the fast Fourier transform algorithm); EX1041, Abstract, 9:4-16 (teaching using Fourier transform algorithms to sharpen images in digital image processing); EX1042, 5:37-42, 9:43-48 (teaching a hardware Fast-Fourier transform (FFT) device used in digital image processing).

Q. <u>Dust on Image Sensor</u>

68. In digital cameras, image data can be defective due to dust or dirt on the digital image sensor.

69. Before the date of the alleged invention of the '266 patent, image corrections for dust or dirt on a digital image sensor was well- known in the art. *See* EX1043, 1:16-18, 1:23-35, 1:38-60 (teaching a digital camera with a judging section for judging whether an image failure is caused due to dirt adhering on an image sensor; an illuminating member which is disposed in the vicinity of the image sensor such that irradiation light can enter the image sensor device and which is driven when at least the judgment is made; a memory for storing a position of a picture element of the image sensor corresponding to image sensor data causing image failure when the judging section judged that image failure has been caused; and a correcting section for correcting the image sensor data output

from the image sensor based on image position data stored in the memory when a picture is photographed after the lens is interchanged"); EX1048, Abstract, [0006]-[0014] (teaching a digital camera that uses a storage device for storing dust positions and a correction unit for correcting for the image of the dust to digitally eliminate the image of dust from an image obtained by an image sensor); EX1049, [0035], [0040], [0042], [0047]-[0060], Fig. 2 (teaching a method of correcting erroneous pixel values resulting from static defects of a CCD sensor, e.g., dust adhesion, sensor damage, etc.).

R. <u>Dead Pixel on Image Sensor</u>

70. In digital cameras, a digital image may have corrupted image data caused by defective pixels in an image sensor.

71. Before the date of the alleged invention of the '266 patent, it was well-known in the art to process image corrections for a dead pixel on a digital image sensor of the digital camera. *See* EX1045, Abstract, [0002], [0006]-[0008], [0019]-[0025], [0027], [0029]-[0030], Figs. 3, 4A and 4B (teaching"[a] method for *correcting for dead pixels in a CMOS image sensor* used in relatively low-cost and small hand-held video cameras)(emphasis added); EX1046, 1:6-8 (teaching an operation of compensating for defective pixels in an image sensing device); EX1047, Abstract ("A defective pixel correction circuit corrects a defective pixel in a solid imaging device such as a CCD exactly and sufficiently").

S. Digital Video Cameras

72. Digital photographic technique captures images and renders them digitally for processing, storage, and delivery. A camera which captures a single image when requested by its user can be called a still camera. If this capture is done digitally, the device can be called a digital still camera.

73. Motion picture photography is based on collecting a rapid sequence of images. These images are referred to as frames. When these images are captured electronically, the result can be called video.

74. Digital video cameras work by capturing frames in rapid sequence, with each frame captured as in still digital photography. This is recognized in the ’266 patent: “video be viewed as merely a very rapid (30 to 60 frames per second) application of still photography.” EX1001, 27:35-36.

75. Before the date of the alleged invention of the ’266 patent, video recording was a well-known digital camera functionality in the art. *See* EX1008, [0006], [0038], [0039], [0047], [0052], [0058], [0061], [0062], [0071], [0072], Fig. 1 (teaching a camera that performs video image corrections and stores the corrected video image as a plurality of frame images in a storage unit on a frame-by-frame basis); EX1019, 9:65-10:13, 10:29-40, (teaching a “digital video camera” that can process image correction and store the corrected image data on a frame-by-frame basis). Indeed, this is also recognized by the ’266 patent. EX1001,

27:25-39 (teaching that video can be viewed as "merely a very rapid (30 to 60 frames per second) application of still photography").

IX. OVERVIEW OF THE '266 PATENT

A. Brief Description

76. The '266 patent discloses using in-camera hardware and software to perform image corrections that were, according to the patent, conventionally performed by optical filters or by external software. EX1001, 6:42-54, 7:27-40, 8:14-19, 13:19-23.

77. The specification of the '266 patent teaches various image corrections, e.g., lens aberration corrections (EX1001, 30:58-31:32), tonal range correction (EX1001, 14:15-67, 33:12-19), depth of field adjustment (EX1001, 13:31-14:14, 33:6-11), sensor dust correction (EX1001, 33:62-34:4) and sensor dead pixel correction. EX1001, 17:4-15.

78. The '266 patent further teaches updating a camera's software and correction data, and wirelessly transferring images stored in the camera to external devices. EX1001, 29:10-20, 36:61-37:5. The '266 patent only briefly mentions that the in-camera software can be updated with improved algorithms to further improve the image correction functions, thereby avoiding a need to upgrade hardware, without explaining more details. EX1001, 8:4-8, 29:16-24, 32:40-49.

79. The ’266 patent discloses storing corrections for different optical aberrations by lens type in a database system. *Id*., 31:14-27, Figs. 5 and 6. According to the ’266 patent, corrections for specific optical aberrations can be obtained for a camera’s specific lens and applied to correct for that aberration after a specific lens type is identified and a database is referenced. *Id*., 31:14-27, Figs. 5 and 6.

80. The ’266 patent discloses that the digital camera may include “wireless communication features” that allow the camera to send “digital image data files wirelessly” to a computer and/or locations accessible via the Internet. *Id*., 36:61-37:5, Fig. 34.

81. The ’266 patent further discloses the digital camera can update the “camera settings” and the “database system” to accommodate corrections for new lenses. *Id*., 29:10-24.

B. <u>Prosecution History</u>

82. The ’266 patent issued without rejection from Track 1 application 16/692,972 filed as a continuation of applications of U.S. Patent Nos. 10,873,685, 8,451,339 and 7,612,805. EX1002, 149-165, 452-464, 1204-1215.

83. The Examiner issued a notice of allowance just two months after the application’s filing without issuing an office action. EX1002, 42-49.

X. OVERVIEW OF THE PRIOR ART REFERENCES

84. I have reviewed and am familiar with the following prior art references: (1) Sarbadhikari, (2) Katagiri, (3) Iwasawa, (4) Yamasaki, (5) Gindele, (6) Ito, (7) Miyazawa, and (8) Hamilton. These references were not cited during prosecution of the ’266 patent.

A. Sarbadhikari

85. Sarbadhikari published on December 19, 1995. Sarbadhikari is directed at a digital electronic still camera for capturing, correcting and storing images in a removable storage device. EX1004, Abstract. Sarbadhikari illustrates its camera system in Figure 2.

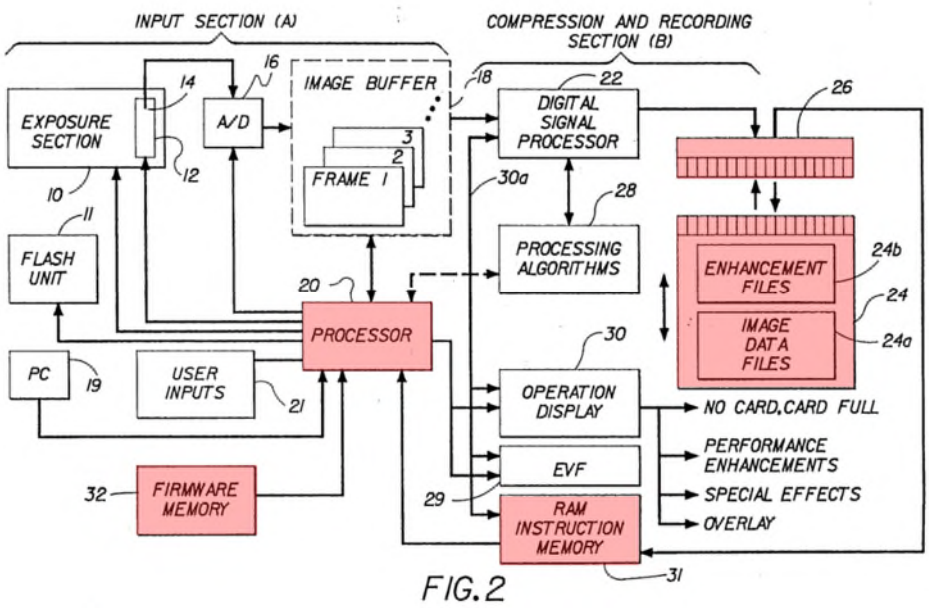

FIG. 2

EX1004, Fig. 2

86. Sarbadhikari teaches that "[a]n electronic camera can use a programmable digital processor controlled by software," providing "an opportunity for software updates" and recognized a need for "software updates of the camera algorithms." EX1004, 2:29-38. Sarbadhikari teaches a solution in which the removable storage device "is also preloaded with enhancement files for effecting the operation of the system." *Id.*, Abstract. "These files may contain software for updating the operating code of the camera" or "for modifying the electrically captured image." *Id.* Sarbadhikari's camera system includes an input section A and a compression and recording section B. EX1004, 5:55-59, Fig. 2. The input section A includes an exposure section 10 with conventional optics for regulating the optical aperture, and a shutter, which regulates exposure time. *Id*., 5:59-65. Sarbadhikari's camera system also includes an image sensor 12 for generating an analog image signal and an A/D converter 16 for generating a digital image signal from the analog image signal. *Id*., 5:65-6:10. An image buffer 18 is also provided for storing the digital images. *Id.*, 7:6-8. The images captured by the image sensor are sent to a removable storage (e.g., memory card 24) through an interface 26. *Id*., 6:27-53. The images are transferred from the camera to an external computer via the removable memory, rather than a cable interface. *Id*., 8:23-26.

87. Sarbadhikari further discloses a programmed control processor which controls exposure settings. *Id*., 6:13-18. Sarbadhikari's camera system also has a

firmware memory 32 for storing firmware algorithms and a RAM instruction memory 31 for downloading "enhancement files 24b" from the memory card 24. *Id*., 7:51-8:3, Fig. 2.

88. According to Sarbadhikari, the "enhancement files" include capture parameters such as exposure time, aperture setting and ISO settings (*id*., 5:11-15, 9:51-10:1), image processing software, look-up tables, matrices, dynamic range optimization tables, and other files capable of affecting the captured image data (*id*., 4:57-63) and parameters for enhancing color such as skin tones, edge sharpness and color aliasing. *Id*., 8:61-9:1.

89. Sarbadhikari explains that because its camera system can access the enhancement files stored in the memory card, software updates can be added to the camera. *Id*., 5:34-40. And the camera can execute new, improved algorithms which provide higher quality pictures or special features. *Id*., 7:65-67.

B. <u>Katagiri</u>

90. Katagiri published on October 14, 2004. Katagiri is directed at a surveillance camera system with the capabilities of processing image data captured by the camera, performing various image corrections (e.g., white balance, black level, gamma correction and distortion correction) (EX1006, [0049], [0053]), and transmitting image data to an external device (e.g., personal computer or mobile phone) using either wired or wireless communication means such as wireless LAN.

EX1006,[0020]-[0025], [0082]-[0083], [0087]-[0088], Fig. 1, (teaching a camera 2 that communicates with, and sends corrected images to, a controller 3 via a network configurable as a wireless LAN, an Ethernet LAN, a direct connection, etc.).

C. Iwasawa

91. Iwasawa published on February 8, 2000. Iwasawa is directed at an electronic still camera or a video camera with a lens (201) and an image sensor (i.e., CCD202) to capture images and perform shading corrections for the captured images based on updatable program and updatable shading correction data corresponding to a number of parameters including aperture value, zoom position, and lens type, and such shading correction data is stored in a rewritable memory (e.g., RAM). EX1005, [0001], [0019]-[0021], [0027], Fig. 2.

D. Yamasaki

92. Yamasaki published on April 17, 2003. Yamasaki teaches a problem that a low-end compact camera cannot take an image with a blur effect because of its small aperture size, which can be taken by a camera with a lens of a large aperture size. EX1028, [0003], [0004]. One of the objectives of Yamasaki is to provide a compact camera that can generate an image with a blur effect as if it were taken by a lens with a large aperture size from a captured image taken by the lens with a small aperture size. *Id*., Abstract, [0006].

93. To that end, Yamasaki teaches a camera that can digitally process a captured image by separating the principal object from the background in the captured image and apply a blur filter process to the background portion of the captured image. *Id*., [0053], [0068], [0076], [0085], [0102], [0115]. As a result, a high- quality image with a natural blur effect can be obtained. *Id*., [0103].

E. <u>Gindele</u>

94. Gindele published on April 8, 2004. Gindele discloses a digital camera in which a digital image processor 20 processes digital images to produce "pleasing looking images." EX1056, [0044]. In doing so, digital image processor 20 has a cascaded modules including four cascaded image processing modules including a "tone scale module 330." *Id*., [0045]. The tone scale module 330 receives the source digital image generated by a prior module and generates a tone scale function from the source digital image and applies the tone scale function to the source digital image resulting in an enhanced digital image. *Id*. Gindele also teaches that the tonal range corrections are user-adjustable variables and the values and control parameters used to control and adjust tone scales are stored in look-up-table. *Id*., [0078], [0138], [0046], [0093], [0124], [0128], Fig. 4.

F. <u>Ito</u>

95. Ito published on April 22, 1994. Ito teaches a digital video camera which performs chromatic aberration corrections based on the correction values

stored in memory corresponding to focal length. EX1038, [0010]. Specifically, Ito teaches that "fast Fourier transform can be used for chromatic aberration correction by digital signal processing." *Id.*, [0017], [0020].

G. <u>Miyazawa</u>

96. Miyazawa published on September 14, 2004. Miyazawa teaches a digital camera that can perform image corrections for images captured by a lens and an image sensor. EX1043, 1:16-18, 1:38-60, 4:8-23, 28-33.

97. According to Miyazawa, "in the case of the digital camera whose lens can be interchanged, there is a problem that dirt or dust (which are collectively called "dirt", hereinafter) is adhered to the image sensor device, an image sensor device protecting glass fixed on the image sensor device, a surface of a filter and the like, or an optical system when the lens is interchanged." EX1043, 1:23-35.

98. To that end, Miyazawa specifically teaches that "[a] digital camera of the present invention whose lens is detachable, comprises: a judging section for judging whether an image failure is caused due to dirt adhering on an image sensor device unit including image sensor device; an illuminating member which is disposed in the vicinity of the image sensor device unit such that irradiation light can enter the image sensor device and which is driven when at least the judgment is made; a memory for storing a position of a picture element of the image sensor device corresponding to image sensor data causing image failure when the judging

section judged that image failure has been caused; and a correcting section for correcting the image sensor data output from the image sensor device unit based on image position data stored in the memory when a picture is photographed after the lens is interchanged." *Id*., 1:46-60. Miyazawa explains that the CPU 110 controls the operations and the dirt position and the picture element defect positions are stored in memory (116, 117). *Id*., 4:8:23, 28-33.

H. <u>Hamilton</u>

99. Hamilton published on October 31, 2002. Hamilton relates to an electronic still camera. EX1044, [0019], Fig. 1. According to Hamilton, "[i]t is an object of the present invention to provide an improved method for correcting for a line of corrupted data in a digital image formed by an image sensor with a defective pixel." *Id*., [0004].

100. To that end, Hamilton discloses "a method for correcting for defects in a digital image taken by an image sensor when there is a pre-existing defect in at least one pixel of the image sensor which causes a line of pixels in the digital image to have corrupted data, comprising the steps of: (a) providing a defect map which identifies the position of the defective pixel and specifies the line of pixels which during readout will be caused to have corrupted data; (b) capturing the digital image in the image sensor and readout such digital image to provide the digital image with the line of pixels in the digital image having corrupted data; (c)

computing classifiers based on adjacent non-corrupted pixel data which indicate that there is a horizontal edge or a diagonal edge feature which passes through the defective column; and (d) adaptively replacing the data in the corrupted image pixels by selecting an algorithm which correponds [*sic*] to the edge feature identified by the classifier and using the valid data in the neighboring non-corrupted pixels of the selected edge feature." *Id*., [0006]-[0010].

XI. GROUND 1: CLAIMS 1-2, 9-10, 20 AND 22-23 WOULD HAVE BEEN OBVIOUS IN LIGHT OF SARBADHIKARI AND KATAGIRI

101. Claims 1-2, 9-10, 20 and 23-23 are obvious over Sarbadhikari and Katagiri.

A. Motivation to Combine

102. This section provides an overview of the reasons why a POSA would have been motivated to combine the disclosures of Sarbadhikari and Katagiri in a way that would yield the alleged inventions claimed in the '266 patent, and also explains why a POSA reasonably would have expected success in doing so. The sections that follow have further discussion of the motivation to combine references.

103. Sarbadhikari is analogous art to the '266 patent. Sarbadhikari is directed at an electronic camera for capturing, modifying or correcting, and storing the corrected images in a removable storage device. EX1004, Abstract. Sarbadhikari's camera system is able to access and use the enhancement files to

improve or enhance the camera's image correction or processing capabilities and store the corrected image data in the removable storage device. EX1004, 3:8-21. According to Sarbadhikari, "[t]hese image processing algorithms can be applied by the camera either during initial processing, when the image is first captured, processed, and stored, or post-capture." EX1004, 8:20-32. These algorithms, according to Sarbadhikari are, for example, color filter array interpolation, noise reduction, edge sharpening, color reproduction and dynamic range optimization algorithms. EX1004, 4:63-5:1. Sarbadhikari further explains that "[a]ccording to the invention shown in FIG. 2, *the images are transferred from the camera to the computer via the removable memory, rather than a cable interface*." *Id*. (emphasis added). "Therefore, the camera does not have to be in the same location as the computer." *Id*. "This makes it possible to view the images from the camera in many different locations, on many different computers, as long as the computer has the ability to both accept the removable memory and correctly process the image data." *Id*. Sarbadhikari is in the same field of endeavor as the '266 patent, which teaches a digital imaging system applies to optical digital capture, processing and storage sub-system. EX1001, 7:17-21. Sarbadhikari is also pertinent to the alleged problem of the '266 patent to improve image quality by applying in-camera digital filters to digitally correct captured images (EX1001, 7:33-47), update software to improve camera (EX1001, 29:10-24) and transfer the corrected image data from

the camera to an external device without using a wired cable. EX1001, 36:61-37:5, Fig. 34.

104. Katagiri is also analogous art to the ’266 patent. Katagiri is directed at a surveillance camera system with the capabilities of processing image data captured by the camera, performing various image corrections including white balance, black level, gamma correction and distortion correction. EX1006, [0049], [0053]. Katagiri teaches that it is not limited to the surveillance camera. *Id*., [0106]. Katagiri is also in the same field of endeavor as the ’266 patent and pertinent to the problem the ’266 patent is designed to solve. Thus, Sarbadhikari and Katagiri are analogous art to the ’266 patent. Moreover, Sarbadhikari, Katagiri, and the ’266 patent all list the H04N subclass under the International Classification.

105. *Second*, a POSA would have understood from Katagiri’s teachings that it would be beneficial to add a wireless communication network (e.g., Wireless LAN, Bluetooth) to the type of camera described in Sarbadhikari. Sarbadhikari teaches that “the images are transferred from the camera to the computer via the removable memory, rather than a cable interface” and [t]herefore, the camera does not have to be in the same location as the computer.” EX1004, 8:24-32. “This makes it possible to view the images from the camera in many different locations, on many different computers, as long as the computer has the

ability to both accept the removable memory and correctly process the image data." *Id*. Katagiri also teaches that its controller (e.g., personal computer, mobile phone) has an image display unit for displaying an image received from a camera via a communication network (e.g., wireless LAN, Bluetooth). EX1006, [0024], [0025], [0118]. A POSA would have understood that the addition of Katagiri's communication network to Sarbadhikari's camera would make the image transmission between Sarbadhikari's camera and external computers faster and easier rather than using the removable memory card.

106. Moreover, a POSA would have had a reasonable expectation of success in modifying Sarbadhikari's camera system with straightforward and routine in the art, requiring only conventional skills because a POSA would have simply added Katagiri's communication network (e.g., wireless LAN, Bluetooth) to Sarbadhikari's camera to wirelessly transfer corrected images from Sarbadhikari's camera to an external device. As discussed in detail in Section XI(B)(7), a POSA would have understood that Sarbadhikari's camera performs image correction by a control processor 20, and compresses and stores the corrected and compressed image signals in the removable image data storage means (i.e., memory card 24) by a digital signal processor 22. EX1004, 6:27-40, 9:2-22, Figs. 2 and 3. A POSA would have simply modified Sarbadhikari's camera conventional skills to include Katagiri's communication network such as a

built-in wireless router or a Bluetooth transmitter to wirelessly transfer the corrected, compressed and stored image signals from the camera to an external device. Such modification would have been well within the ability of a POSA given the prevalence and well-understood nature of wireless communication.

107. Indeed, using wireless connection to send and receive image data between a camera and an external device was well-known in the art. *See* EX1007, [0044], [0060] (teaching a camera which can transmit "corrected image data (222) to another terminal via either "*antenna*" or an "*external memory*")(emphasis added); EX1008, [0044] (teaching a camera having communication interface with an external device in compliance with both wired communication protocols (e.g., *IEEE 1394, Ethernet*) and wireless communication standards (e.g., *IEEE802.11x, Bluetooth*) that can control *wired or wireless communication* process with other devices through the internet)(emphasis added); EX1009, [0009], [0011], [0016], [0019], [0025], [0027], [0031]-[0033], [0036], [0046], [0054], [0056]-[0058] (disclosing a camera that can transmit image data to an external display via a *wired network cable* (100a) or a *wireless communication interface* in compliance with the IEEE 802.11b and IrDA (Infrared Data Associate) standards)(emphasis added); EX1010, [0173], [0176], [0180] (teaching an imaging device that may transfer images to an external computing device through "*a wired or wireless medium*" such as "a local area network (LAN), a wide area network (WAN), the Internet, a

telephone line, a cable line, a radio channel, an optical communications line, and a satellite communications link" and "Ethernet (or IEEE 802.3), SAP, ATP, Bluetooth™, IEEE 802.11, CDMA, TDMA, ultra- wideband, universal serial bus (USB), and TCP/IP") (emphasis added); EX1011, [0015], [0157], [0158] (teaching an electronic camera that can transmit image data to another image display terminal such as portable telephone through *a wired or wireless* communication function such as Bluetooth) (emphasis added); EX1012, [0292], [0306] (teaching an image transmitter 2604 transmitting image data to an image receiver through *a wireless or wired communication*) (emphasis added); EX1013, [0011], [0026], [0034] (teaching a camera 108 that can be connected to an external device 102 via industry communication means such as *direct cable means* or *wireless LAN and Bluetooth*) (emphasis added); EX1014, pp. 46-51 (teaching a camera that can transfer pictures and videos to an external computer via *Wi-Fi wireless network* if "*wired connections* may not be practical or are otherwise impossible") (emphasis added); EX1017, [0020], [0022], Fig. 1 (teaching a camera that can be either "*physically connected*" to an external device or via a "*wireless connection*") (emphasis added). It was well-known in the art that electronic devices, like Sarbadhikari's camera, could have been improved by the addition of wireless transmission capability, such as taught in Katagiri. Thus, this modification is an example of using a known technique to improve similar devices in the same way

and applying a known technique to a known device ready for improvement to yield predictable results. And nothing in Sarbadhikari or Katagiri would have discouraged a POSA from this modification.

B. <u>Claim 1</u>

108. Claim 1 is obvious over Sarbadhikari and Katagiri as explained below.

1. Claim [1PRE]: "A method of processing one or more images with a digital camera, comprising:"

109. I have been informed that the preamble is not a limitation. However, even if it were a limitation, Sarbadhikari teaches or at least renders claim [1PRE] obvious.

110. Specifically, Sarbadhikari discloses an electronic imaging system such as an electronic camera including "an optical section for establishing the optical parameters of image capture, an image sensing section for electrically capturing an image provided by the optical section, a signal processing section for processing the electrically captured image, a programmable processor for controlling the sections of the system, and means for loading the programmable processor with the software preloaded in the removable storage device for affecting operation of one or more of the sections of the system." EX1004, 2:56-65, Figs. 2-5.

111. Thus, a POSA would have understood that Sarbadhikari teaches or at least renders obvious to a POSA claim [1PRE].

2. Claim [1A-1]: "digitally processing at least one captured image, the processing using in-camera hardware and software that is configured to:"

112. Sarbadhikari teaches or at least renders claim [1A-1] obvious.

113. Sarbadhikari generally discloses that "[a]n electronic camera can use a *programmable digital processor* controlled by *software*." EX1004, 2:33-35. (emphasis added). Sarbadhikari specifically illustrates in Figure 2 an electronic camera with various in-camera hardware and software components.

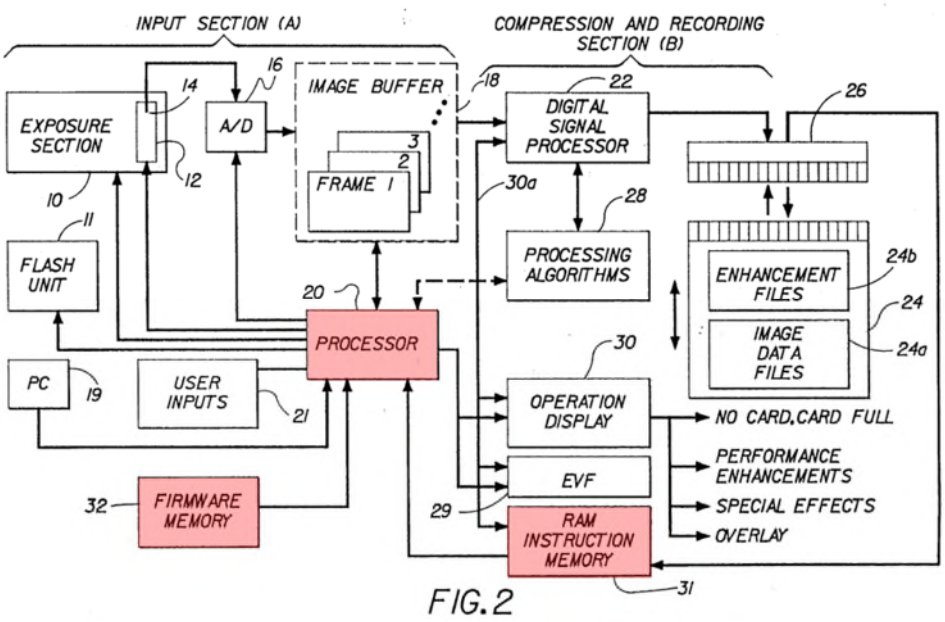

EX1004, Fig. 2

114. Referencing Figure, 2, Sarbadhikari teaches that "[a] *programmed control processor* 20 generally controls the input section A of the camera by initiating and controlling exposure (by operation of the diaphragm and shutter (not shown) in the exposure section 10), by controlling the flash unit 11, by generating

the horizontal and vertical clocks needed for driving the sensor 12 and for clocking image information therefrom, and by enabling the A/D converter 16 in conjunction with the image buffer 18 for each signal segment relating to a picture element. (The control processor 20 would ordinarily include a microprocessor coupled with a system timing circuit)." *Id*., 6:11-40, Fig. 2 (emphasis added). Sarbadhikari also discloses a digital signal processor 22. *Id*. A POSA reading Sarbadhikari would have understood that the "control processor 20," the "A/D converter 16," the "image buffer 18" and the "digital signal processor 22" are in-camera hardware as recited in claim [1A-1].

115. Sarbadhikari continues that "[t]he camera also contains *firmware memory* 32 with *operating code* for the camera, as well as *RAM instruction memory* 31 connected to receive *code* from the memory card 24." *Id*., 7:60-65. (emphasis added). "When the memory card 24 is inserted into the camera, the processor 20 uses the *firmware algorithms* in the memory 32 to determine if the memory card 24 contains 'software enhancements' which can be used by the camera." *Id*. 7:51-67 (emphasis added). "If not, the firmware algorithms supplied with the camera in the memory 32 are used by the programmable processor 20." *Id*. "If the card does contain appropriate 'software enhancements', however, these are downloaded from the enhancement file section 24b of the card 24 to the RAM instruction memory 31 and used by the programmable processor 20 in place of

some portion of the firmware algorithms supplied with the camera from the firmware memory 32." *Id*. "In this way the camera can execute new, improved *algorithms* which provide higher quality pictures or special features." *Id*.

116. Thus, a POSA reading Sarbadhikari would have understood that the "firmware memory 32" and the "RAM instruction memory 31" are also in-camera hardware as recited in claim [1A-1]. A POSA would further understand that the "operating code" and "firmware algorithms" stored in the firmware memory 32, and the "software enhancements" downloaded from the memory card 24 to the RAM instruction memory 31 are the in-camera software as recited in claim [1A-1].

117. A POSA would also understand that the programmable processor 20 in Sarbadhikari's camera system uses the "software enhancements" with "new, improved algorithms" to digitally process captured image data with "higher quality pictures or special features."

118. Thus, a POSA would have understood that Sarbadhikari teaches or at least renders obvious to a POSA claim [1A-1].

3. Claim [1A-2]: "perform a plurality of image correction algorithms,"

119. Sarbadhikari teaches or at least renders claim [1A-2] obvious.

120. Sarbadhikari discloses an electronic camera that "can use a programmable digital processor controlled by software" and a "method for software updates of the *camera algorithms* for higher performance, and for adding

new features to a camera." EX1004, 2:36-38 (emphasis added). Sarbadhikari also teaches several "typical algorithms" that include "color filter array interpolation algorithms, noise reduction algorithms, edge sharpening algorithms, color reproduction algorithms, compression algorithms, or dynamic range optimization algorithms." *Id*., 4:63-5:1. In addition, Sarbadhikari also discloses algorithms on multiple occasions such as "correction algorithms" or "future improved versions of these algorithms" (*id*., 8:32-37), "different algorithms" that "can be applied to achieve the most desirable result" (*id*., 9:23-28) and "image processing algorithms" that "can be applied by the camera either during initial processing, when the image is first captured, processed, and stored, or post-capture. *Id*., 8:19-23, Fig. 5. Sarbadhikari teaches that these algorithms are used by the programmable process 20 to "execute new, improved algorithms which provided higher quality pictures or specifical features." *Id*., 7:51-8:3.

121. A POSA would have understood that these algorithms as taught in Sarbadhikari are image correction algorithms as recited in claim [1A-2] and Sarbadhikari's in-camera hardware such as the programmable process 20 uses these image correction algorithms to perform image corrections for captured images.

122. Thus, a POSA would have understood that Sarbadhikari teaches or at least renders obvious to a POSA claim [1A-2].

4. Claim [1A-3]: "process image correction data stored in a database system,"

123. Sarbadhikari teaches or at least renders claim [1A-3] obvious. Sarbadhikari discloses that "look-up tables, matrices, dynamic range optimization tables, and other files capable of *affecting* the captured image data can be included in the digital storage device." EX1004, 4:57-5:1. (emphasis added). "Such non-image files, which cause processing of the captured image data, may process the captured image data such that the most 'true-to-scene' reproduction is achieved, or instead provide special effects of the kind which *change* the image into some desired alteration of the original scene." *Id*. 5:5-10 (emphasis added).

124. Sarbadhikari further teaches certain types of parameters for correcting captured images. Specifically, Sarbadhikari teaches that "[a]n appropriate set of *parameters* for image capture would be incorporated in the associated non-image data file." *Id*., 8:61-9:1. "In this application, the non-image data file would provide that the color reproduction should be optimized for skin tones, the edge sharpening should not be too severe, and the color filter array algorithm should minimize color aliasing at the expense of reduced sharpness." *Id*.

125. A POSA reading Sarbadhikari would have understood that the non-image files including the look-up tables, matrices, dynamic range optimization tables, and the parameters which can be used to affect or change the captured image with true-to-scene, special effects, and optimized skin tones, edge sharpness,

and color aliasing, are the "image correction data" as recited in claim [1A-3]. A POSA would further understand that these tables, matrices and parameters stored in the memory card 24 and the RAM instruction memory 31 are the database system recited in claim [1A-3].

126. A POSA would have understood that Sarbadhikari's processor 20, as an in-camera hardware, processes the look-up tables and the parameters enhancing image effects (the claimed "image correction data") stored in the RAM instruction memory 31. A POSA further would have understood that the organized collection of data such as the look-up tables, matrices, parameters stored in the RAM instruction memory 31 is a database system. For example, a POSA understood that the data stored in the RAM instruction memory 31 would be addressable based on RAM addresses, and therefore would be a database system. *See* EX1016, 2:8-12 ("a database may be viewed as one or more tables of information"); EX1060, 1:36-39 ("Data records in a computer database are maintained in tables, which are a collection of rows all having the same columns"); EX1018, [0082]-[0086], [0096], [0108], Fig.5 (teaching correction tables including correction coefficients stored in shading ROM 153).

127. Thus, a POSA would have understood that Sarbadhikari teaches or at least renders obvious to a POSA claim [1A-3].

5. Claim [1A-4]: "receive updated software and image correction data, and,"

128. Sarbadhikari teaches or at least renders limitation [1A-4] obvious as explained below.

a. <u>Receive Updated Software</u>

129. Sarbadhikari generally teaches that "[i]t is well known that computer programs are updated more regularly than computer hardware, since the software can be refined to provide higher performance (i.e. better image quality) or more features while using the same hardware." EX1004, 2:28-38.

130. Sarbadhikari goes on to specifically teach that "[a]n electronic camera can use a programmable digital processor controlled by software[,]" and "[s]uch a camera offers an opportunity for *software updates*, if the system is designed to facilitate such updates." *Id*. (emphasis added). Sarbadhikari explains that "[w]hat is needed is a method for *software updates* of the camera algorithms for higher performance, and for adding new features to a camera." *Id*. (emphasis added).

131. To that end, Sarbadhikari discloses a "removable image storage device" that "is capable of two-way communication with the camera." *Id*., 4:47-49, Fig. 2. The removable image storage device 24 is connected to the camera through an interface 26. *Id*., 6:37-40, Fig. 2.

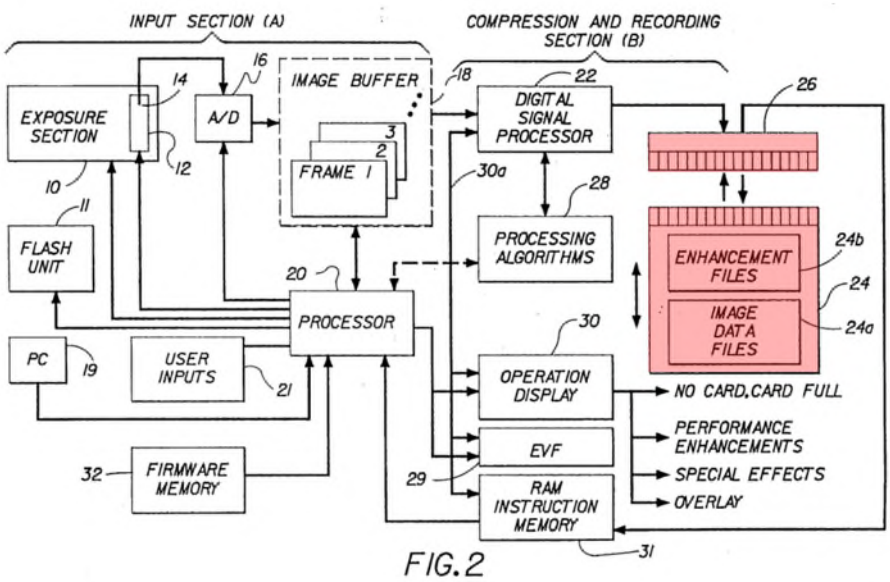

EX1004, Fig. 2

132. Sarbadhikari explains that "the card slot interface is not limited to 'dumping' image data downstream to the removable storage device, but also allows communication from the removable storage device upstream to the camera as well." *Id*., 4:49:52. Sarbadhikari further explains that "[i]nasmuch as the files are *software* which enhance the operation of the camera, the digital storage device may be viewed as a *software-enhanced* device, and the files are hereinafter referred to as enhancement data files." *Id*., 4:53-56 (emphasis added).

133. According to Sarbadhikari, the removable image storage device, for example, is a memory card 24. *Id*., 6:40-45. "The memory card 24 contains solid state memory 24a, such as Flash EPROM memory, which the card uses to store image data files." *Id*., 6:53-66. "In addition, the memory card 24 contains additional memory to store enhancement data files 24b to *modify* the camera

operation, or the images captured by the camera[.]" *Id*. (emphasis added). "These *software enhancements* are normally programmed by the card manufacturer before the card is sold to the user, and can be stored in the Card Information Structure (CIS) of the PCMCIA Format (as described in the aforementioned Release 2.0)." *Id*. (emphasis added).

134. Sarbadhikari further teaches that "[w]hen the memory card 24 is inserted into the camera, the processor 20 uses the firmware algorithms in the memory 32 to determine if the memory card 24 contains 'software enhancements' which can be used by the camera." EX1004, 7:51-67. "If the card does contain appropriate 'software enhancements', however, these are downloaded from the enhancement file section 24b of the card 24 to the RAM instruction memory 31 and used by the programmable processor 20 in place of some portion of the firmware algorithms supplied with the camera from the firmware memory 32." *Id*. "In this way the camera can execute new, improved algorithms which provide higher quality pictures or special features." *Id*.; *see also id*., 9:2-29, Fig. 3 (teaching the process steps of the processor 20 downloading the processing algorithms in the enhancement files (24b) from the memory card 24), 3:9-20 ("[a] camera according to this invention … transfer[s] software previously recorded on the memory card (such as improved camera firmware to process the image)" to the camera), 4:37-5:1 (enhancement files include "code" "capable of upstream

modification of image data"), 5:35-40 ("another function of the invention is to store replacement, or updated, software files in the digital storage device so that software updates can be added to the camera").

135. A POSA reading Sarbadhikari would have understood that Sarbadhikari's camera receives software updates for higher performance and for adding new features to a camera from a memory card 24 through a user interface.

b. <u>Receive Updated Image Correction Data</u>

136. Sarbadhikari explicitly teaches a number of "*typical* algorithms" including color filter array interpolation algorithms, noise reduction algorithms, edge sharpening algorithms, color reproduction algorithms, or dynamic range optimization algorithms. EX1004, 4:63-5:1 (emphasis added).

137. A POSA reading Sarbadhikari would have understood that these algorithms are typical and processed by a conventional camera to perform image correction. *See* EX1050, 1:26-30 (teaching that "[a] typical camera system generates red, green, and blue colors" and "[a] color filter array interpolation algorithm is used to convert the image from a sparsely sampled color image (one color per pixel) to a full red, green, blue (RGB) image (i.e., RGB for each pixel)"); EX1051, [0067] ("A correcting unit 44 performs a variety of image processing such as white balance control, gamma correction, noise removal, color correction, and color enhancement on the image data in the image memory 34"); EX1052, 1:1-

3 (teaching that "[s]harpness is one important factor that determines image quality" and "[a]n edge emphasis circuit is used to improve the sharpness"); EX1056, [0006] (teaching that "[a] spatial filter can be used to apply a tone scale function to a digital image in such a manner that the image spatial detail will be relatively unaffected" and "[t]his is particularly useful for compressive tone scale functions designed to reduce the image dynamic range").

138. Moreover, Sarbadhikari further teaches that these "typical algorithms" can be "*modified, or updated*." EX1004, 4:63-64 (emphasis added). In addition, Sarbadhikari explicitly teaches that the storage device includes "files (data, code, etc.)" that are "capable of upstream modification of image data and camera performance." EX1004, 4:37-47. These files include the information stored in look-up tables such as "dynamic range optimization tables" (*id*., 4:60-61) and "[a]n appropriate set of parameters for image capture" for enhancing skin tones, edge sharpening, and color filter array algorithm. *Id*., 8:61-9:1. "This provides an opportunity for affecting image data during the capture and manipulation stages prior to storage." *Id*., 4:42-44. These files are "capable of affecting the captured image data." *Id*., 4:60-61, 8:61-9:1. Sarbadhikari further teaches that these files including non-image data "thus" updates "typical algorithms" stored on the camera, which include various image correction algorithms such as "noise reduction algorithms, edge sharpening algorithms," "dynamic range optimization

algorithms," and so on. *Id*., 4:57-5:10. In lights of Sarbadhikari's teachings of the algorithms that can be updated or modified, and the tables and parameters for enhancing the image effects that those algorithms are designed to achieve, it was inherent or at least obvious to a POSA that Sarbadhikari's camera would have had certain parameters and/or information stored in the tables used by the processor 20 to execute those typical algorithms even without access to the enhancement files stored in the memory card 24 for update or modification.

139. Indeed, Sarbadhikari teaches that if its camera system detects that the memory card 24 does not contain the "software enhancements," then "the *firmware algorithms* supplied with the camera in the memory 32 are used by the programmable processor 20." (emphasis added). A POSA would have understood that Sarbadhikari's camera would still be able to execute the "firmware algorithms" stored in the memory 32 with certain parameters for processing the typical algorithms even without access to those parameters or the information stored in lookup tables from the memory card 24 for enhancing those typical algorithms. In other words, it was inherent or at least obvious to a POSA that Sarbadhikari's camera with the RAM instruction memory 31 downloads the "enhancement files" including the parameters and the information stored in lookup tables from the memory card 24 for enhancing those typical algorithms, and therefore can receive the "updated image correction data" as recited in claim [1A-

4]. And this is also why Sarbadhikari explains that its camera system can use "improved algorithms which provide higher quality pictures or special features." *Id*., 7:65-67.

140. It was well-known in the art to update software and image correction data for correcting images captured by an electronic camera. *See* EX1005, [0001], [0019], [0020], [0021], (teaching a digital camera with a "program input 212" that can introduce new program externally into the camera for calculating shading correction data and update a rewritable storage "RAM 208" by writing the newly calculated shading correction data to the "RAM 208"); EX1015, 54:52-65 (teaching that "[t]he correction coefficient setting section 138, may optionally have a correction coefficient supply subsection 138C for updating the correction coefficients in correction formulae that are stored for each lens type recognizing code in the correction coefficient storing subsection 138A for correcting aberrations such as chromatic aberration of magnification and distortion; in this case, correction coefficients for new lens types can be updated from the correction coefficient supply subsection 138C into the correction coefficient storing subsection 138A by means of various storage media such as an FD (floppy disk), an MO (magneto-optical disk) and Zip"); EX1016, 1:29-37, 2:24-38 (disclosing upgrade of the host software and/or the camera firmware with a new release of software or firmware for "bug" fixes, enhancements to algorithms, updated color

sensing, updated compression, new protocols for accessing and formatting the storage medium, and so forth); EX1006, [0012], [0013], [0015], [0027], [0051], [0082] (teaching a camera which can receive updated processing program (e.g., white balance, gamma correction, YC conversion, zooming, pixel number conversion, image size modification, sharpness correction, profile correction, contrast correction) and updated information for the processing program (e.g., opening screen setting command, copyright setting command, wipe setting command, gamma correction command) from a removable storage medium and store the updated processing program and information in a non-volatile memory, e.g., EEPROM); EX1017, [0003], [0019], [0025], [0028], [0032] Figs. 2 and 3 (teaching a camera that can perform process of finding or updating correction parameters 18 stored in correction database 26 used by image processing algorithm 22 to remove or reduce degradation present in digital image).

141. Thus, a POSA would have understood that Sarbadhikari teaches or at least renders obvious to a POSA claim [1A-4].

6. Claim [1A-5]: "upgrade the digital camera with the updated software and image correction data;"

142. Sarbadhikari teaches or at least renders limitation [1A-5] obvious.

143. The '266 patent mentions the term "upgrade" in the written description of the specification only on three occasions. On the first occasion, the '266 patent teaches that "[i]mportantly, since the present system uses apparatus

and methods that are implemented with software processes, in-camera software can be constantly upgraded and remotely downloaded, while image files can be automatically uploaded, organized and published." EX1001, 8:4-8. A POSA reading this passage would have understood that in-camera *software* is upgradable (emphasis added).

144. On the second occasion, the '266 patent teaches that "[t]his feature is particularly important to both manufacturer and user because the ability to update software capability periodically will protect a user from needing to upgrade major hardware such as with a lens replacement." *Id*., 29:20-24. A POSA reading this passage would have understood that if *software is updated*, a user does not need to *upgrade hardware* (emphasis added).

145. On the third occasion, the '266 patent states that "[a]s information and techniques are made available, new software to ascertain and correct each lens's unique optical aberrations will be forwarded to the camera and stored in the lens, thereby providing an upgrade path to continuously improve the optical qualities of lenses by employing a sort of after-manufacture digital correction." *Id*., 32:44-49. A POSA reading this passage would have understood that *new software* can *upgrade* or improve quality of hardware.

146. Thus, a POSA would have understood that the '266 patent uses the terms "update" and "upgrade" interchangeably for software and the term "upgrade"

for improved hardware performance (i.e., improve quality of hardware) resulting from software update.

147. As I discussed in the preceding section, Sarbadhikari teaches an electronic camera that can receive and perform the enhancement files where non-image files such as updated software, algorithms, look-up tables, matrices and parameters downloaded from the removable storage device (i.e., memory card 24) to enhance or upgrade hardware performance of the camera. *Supra* § XI(B)(3)(4) and (5).

148. Indeed, a POSA would have understood that Sarbadhikari's system is designed to provide new applications with higher performance or more features for an electronic camera by updating software, algorithms and other non-image data such as look-up tables and parameters "*while using the same hardware*." EX1004, 2:28-33 (emphasis added). This is exactly the same objective that the '266 patent is designed to achieve by updating software and image correction data. *See* EX1001, 29:20-24 (teaching that "[t]his feature is particularly important to both manufacturer and user because the ability to update software capability periodically will *protect a user from needing to upgrade major hardware such as with a lens replacement*") (emphasis added).

149. In light of the foregoing, Sarbadhikari teaches or at least renders limitation [1A-5] obvious for the reasons given regarding limitation [1A-4]. *Supra* § XI(B)(5)(a) and (b).

7. Claim [1B]: "storing in memory one or more corrected images resulting from digitally processing the at least one captured image; and;"

150. Sarbadhikari teaches or at least renders limitation [1B] obvious.

151. As a non-limiting example, Sarbadhikari explains and illustrates in Figure 4 several steps of processing image corrections for captured images and storing corrected images "in the removable image data storage means." EX1004, Fig. 4.

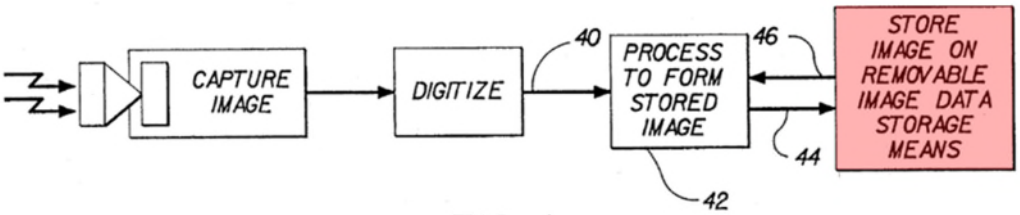

FIG. 4

EX1004, Fig. 4

152. Sarbadhikari explains that "[w]hen the camera is ready to capture images, the processor 20 within the camera checks if there are software enhancements in the enhancement file 24b in the card 24." EX1004, 9:2-9, Fig. 3. "If such files are present, the processor 20 downloads the processing algorithm(s) in the enhancement file 24b contained in the removable memory card 24." *Id.*

"The algorithms may be applied at *point 40* after the image data is digitized." *Id*., 9:13-22 (emphasis added). "Processing according to the downloaded algorithm may alternatively take place as the image data is originally being processed for initial storage *at points 42 or 44*, or may be applied at a later time after the initial storage of the image is complete at point 46." *Id*. (emphasis added). Sarbadhikari further explains that the digital signal processor 22 "applies a compression algorithm from the memory 28 to the digital image signals, and sends the compressed signals to a removable storage device via an interface 26." *Id*., 6:27-40, Fig. 2.

153. A POSA reading Sarbadhikari would have understood that Sarbadhikari's camera system performs image corrections by the control processor 20 using the image corrections algorithms downloaded from the memory at point 40, 42 or 44 depicted in Figure 4, compresses the corrected image signals and stores the corrected images on the removable image data storage means (i.e., memory card 24) by the digital signal processor 22.

154. Thus, a POSA would have understood that Sarbadhikari teaches or at least renders obvious to a POSA claim [1B].

8. Claim [1C]: "wirelessly transmitting at least one of the one or more corrected images,"

155. Sarbadhikari renders limitation [1C] obvious in light of Katagiri.

156. The ’266 patent teaches that “the present digital imaging system may be set to send data files directly and automatically to hard-chive storage either in a device in the same room or uploaded to the Internet for storage around the world” by using a “built-in wireless router” implemented in a “local area network (LAN) or a wide area network (WAN)[.]” EX1001, 28:61-66.

157. Sarbadhikari teaches that “[t]hese image processing algorithms can be applied by the camera either during initial processing, when the image is first captured, processed, and stored, or post-capture.” EX1004, 8:20-32. “According to the invention shown in FIG. 2, the images are transferred from the camera to the computer via the removable memory, rather than a *cable interface*.” *Id*. (emphasis added). “Therefore, the camera does not have to be in the same location as the computer.” *Id*. “This makes it possible to view the images from the camera in many different locations, on many different computers, as long as the computer has the ability to both accept the removable memory and correctly process the image data.” *Id*.

158. A POSA reading Sarbadhikari would have understood that the way of transmitting the corrected images from the camera to a remote computer is to use a removable memory rather than a cable (*i.e*., wired transmission). To the extent it is found that Sarbadhikari’s removable memory card used to transfer corrected image data from a camera to a remote device is not a wireless transmission medium,

Katagiri (EX1006) teaches a communication network that can wirelessly transmit corrected images from a camera to an external device.

159. Specifically, Katagiri teaches a camera (2) (e.g., surveillance camera) with the capabilities of processing image data captured by the camera, performing various image corrections (e.g., white balance, black level, gamma correction and distortion correction) (EX1006, [0049], [0053]), and transmitting image data to an external device using either wired or wireless communication means such as wireless LAN. EX1006, [0020]-[0025], [0082]-[0083], [0087]-[0088], Fig. 1, (teaching a camera 2 that communicates with, and sends corrected images to, a controller 3 via a network configurable as a wireless LAN, an Ethernet LAN, a direct connection, etc.).

160. Specifically, Katagiri discloses that "the surveillance system 1 in the first embodiment comprises a surveillance camera 2 and a controller 3." EX1006, [0045]. "The surveillance camera 2 in the first embodiment comprises an image forming unit 201, an imaging element 202, an image generation unit 203 (corresponding to the captured image generation unit), an image storage unit 204, a central processing unit (CPU) 205, an image processing unit 206 (corresponding to the display image creation unit), an image synthesis unit 207 (corresponding to a display image correcting unit), an input/output (I/O) unit 208, and a drive unit 209." *Id*. "An imaging unit 210 comprises the image forming unit 201 and the

imaging element 202, and a control unit 220 comprises the image generation unit 203, the image storage unit 204, the CPU 205, the image processing unit 206, the image synthesis unit 207, and the I/O unit 208." *Id*. "The image generation unit 203 performs, on the A/D-converted R, G, and B digital signals, black level correction for correcting the black level to a reference black level; white balance for converting the digital signal levels of red (R), green (G), and blue (B) color components on the basis of the appropriate white standard for the light source; and gamma correction of the red (R), green (G), and blue (B) color digital signals for gamma characteristic correction." *Id*., [0049]. "The image processing unit 206 corrects distortion in the captured image by converting the captured image stored in the image storage unit 204 to a display image for display." *Id*., [0053].

161. Katagiri further discloses that "[t]he communication network 4 for communicably connecting the surveillance camera 2 and the controller 3 comprises a wireless local area network (LAN), using a transmission medium such as radio waves or infrared radiation, a LAN constructed in accordance with Ethernet (registered trademark) standards, or the like." *Id*., [0024]. "Note that although the surveillance camera 2 and the controller 3 are connected via the communication network 4 in the present embodiment, the present invention is not specifically limited thereto, and the surveillance camera 2 may be connected directly to the controller 3, or the internet may be used as the communication network 4." *Id*.,

[0025]. "Moreover, the surveillance camera 2 and the controller 3 in the present embodiment may be connected by wireless communication such as Bluetooth (registered trademark)." *Id*. Thus, Thus, Katagiri teaches "wirelessly transmitting at least one of the one or more corrected images" recited in claim [1C].

162. A POSA would have been motivated to modify Sarbadhikari in light of Katagiri by adding Katagiri's communication network (*e.g*., wireless LAN, Bluetooth) to the type of camera described in Sarbadhikari to wirelessly transmit Sarbadhikari's corrected images from a camera to an external device. *Supra* § XI(A). This implementation to transfer images from a camera to an external computer wirelessly would have been within a POSA's level of ordinary skill. *Id*.

163. Thus, Sarbadhikari alone, or in combination with Katagiri, teaches or at least renders limitation [1C] obvious.

9. Claim [1D]: "wherein the in-camera software and database system are upgradable to provide improved algorithms and correction data for correction of images."

164. Sarbadhikari teaches or at least renders limitation [1D] obvious. With respect the claim term "improved algorithms," the '266 patent includes only a few cursory or brief mentions of new software updates with "improved" algorithms. EX1001, 8:4-8, 29:16-24, 32:40-49. Those mentions essentially just explain that the in-camera software may be updated to further improve the image correction functions to avoid a need to upgrade hardware. The '266 patent, however, does not

explaining more details. As discussed in § XI(B)(3) for limitation [1A-2], Sarbadhikari teaches software updates of the camera algorithms (the claimed "upgradable" in-camera software) for higher performance, and for adding new features to a camera, and these algorithms include "improved versions" (the claimed "improved algorithms") and are used for image corrections. As discussed in § XI(B)(4) for limitation [1A-3], Sarbadhikari's camera receives the look-up tables, matrices and parameters that are stored in the instruction memory 31 (the claimed "upgradable" database system), and in § XI(B)(5) for limitation [1A-4] Sarbadhikari explains that these look-up tables, matrices and parameters are updated image correction data (the claimed "improved image correction data"). As discussed in § XI(B)(6) for limitation [1A-5], Sarbadhikari teaches "upgrade the digital camera with the updated software and image correction data." Thus, a POSA would have understood that Sarbadhikari teaches that "the in-camera software and database system are upgradable to provide improved algorithms and correction data for correction of images" as recited in limitation [1D].

165. In light of the foregoing, Sarbadhikari teaches or at least renders limitation [1D] obvious for the reasons given regarding limitations [1A-2], [1A-3], [1A-4] and [1A-5]. *Supra* § XI(B)(3)-(6).

C. <u>Claim 2</u>

166. Claim 2 is obvious over Sarbadhikari and Katagiri as explained below.

[2]: "The method of claim 1, wherein the digitally processing at least one captured image further comprises: electronically reading stored user-adjustable variables; and processing image corrections using the user-adjustable variables."

167. As discussed, Sarbadhikari teaches that the RAM instruction memory 31 stores a plurality of algorithms, look-up tables, matrices and parameters as non-image data (i.e., enhancement files 24b) downloaded from the memory card 24 for modifying or enhancing effects of captured images. *Supra* § XI(B)(3) and (4). Sarbadhikari further teaches and illustrates in Figure 2 that its camera system has an operation display (30).

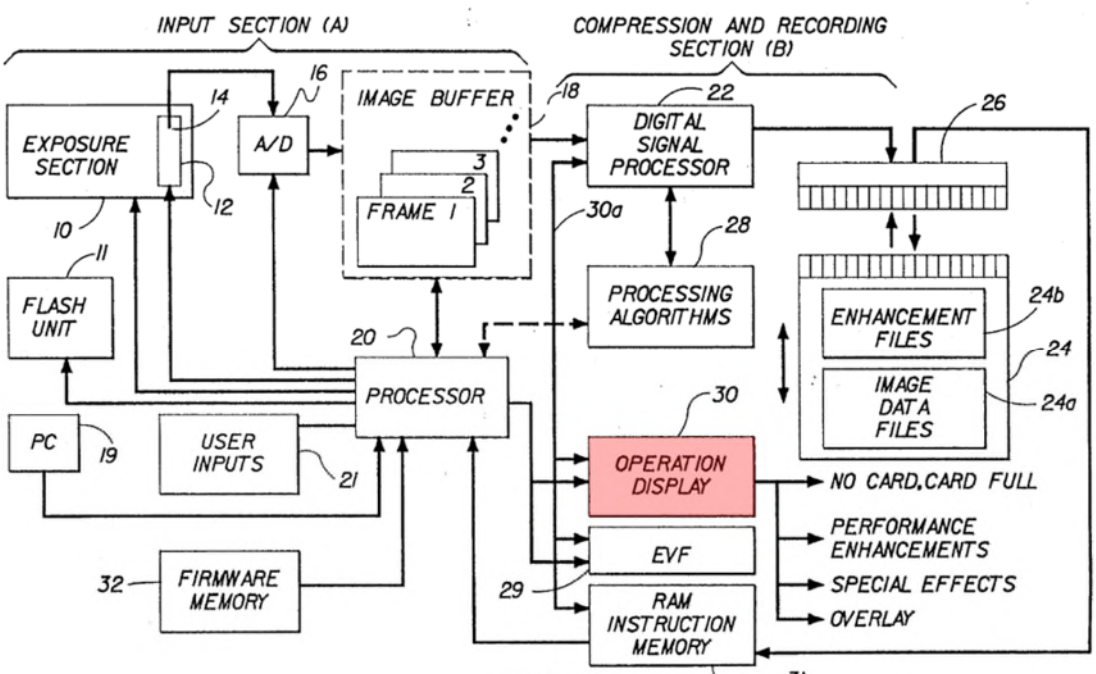

FIG. 2

EX1004, Fig. 2

168. According to Sarbadhikari, "[the] operation display panel 30 is connected to the control processor 20 for displaying information useful in operation of the camera." EX1004, 7:15-22. Sarbadhikari explains that "[i]f enhancement files 24b are present on the card 24, they can be identified on the operation display 30." *Id*., 7:31-50. "For instance, performance enhancements, such as special set-up for portraiture, can be identified; processing enhancements, such as special effects, can be identified; and overlay enhancements, such as birthday or holiday picture borders, can be identified." *Id*. "*User intervention* in order to specify the *several enhancement opportunities*, or to set conventional capture parameters, is obtained from a *user inputs section 21*." *Id*. (emphasis) "Such inputs could be one or more selector switches operable alone or in conjunction with prompts from the operation display 30 or the electronic viewfinder 29." *Id*. In particular, Sarbadhikari teaches that the "image processing algorithms" in the enhancement files 24b contained in the memory card can selected by a user from the "user input section 21" depending on the "detected picture taking situation[.]" *Id*., 9:2-13, Fig. 3.

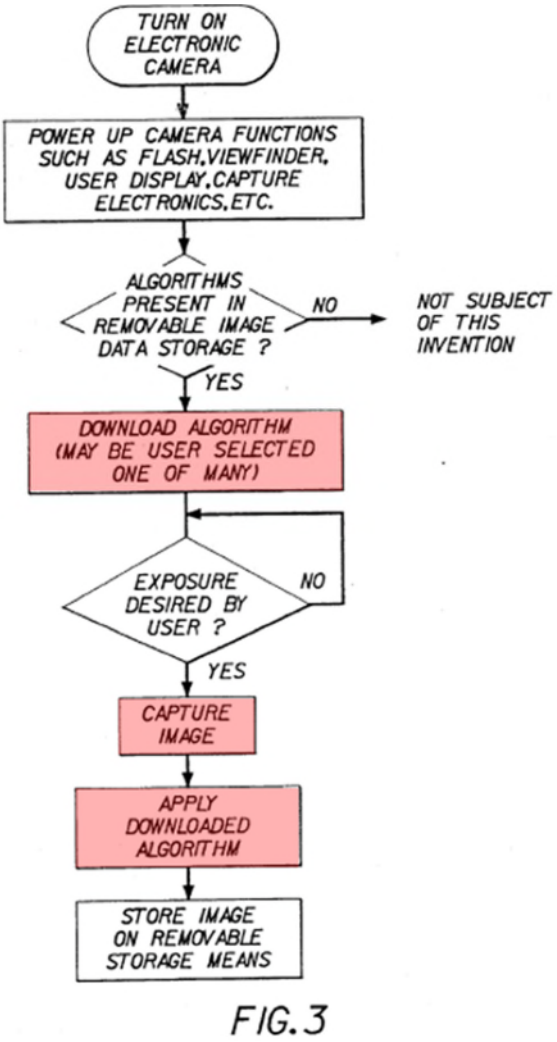

FIG. 3

EX1004, Fig. 3

169. As shown in Figure 3, Sarbadhikari explains that its camera system allows a user to select and download one or more algorithms that are stored in the memory card 24 and performs the step of "APPLY DOWNLOADED ALGORITHM" to process image following the step of "CAPTURE IMAGE." EX1004, Fig. 3.

170. A POSA reading Sarbadhikari would have understood that the "enhancement opportunities" depending on specific image processing algorithm(s) that a user selects to use to modify captured images from the enhancement files are user-adjustable variables, and that these enhancement files are electronically read from the memory card 24 and used by the processor 20 to process image corrections after image is captured.

171. It was well-known in the art to use user-adjustable variables such as filter settings for image corrections in imaging processing system. *See* EX1061, 2:31-33, 2:37-40, 7:54-61 (teaching an electronic camera teach user-adjustable filters including dynamic controllable filer, vegetation, color balance and contrast adjustments); EX1026, [0006], [0038], [0059], [0061], [0066], [0074]-[0092], Figs. 2 and 7 (teaching an image processing device with a menu that allows user to select various filters including color tone correction, sharpness, noise removal, image size, display magnification, brightness and contrast to correct images taken by a digital camera); EX1027, [0030], [0032] (teaching a camera with a filter selection button used by the user to select digital filer types including fog filter, motion blur filter, graded blue sky filter).

172. A POSA would have been motivated to modify Sarbadhikari in light of Katagiri because (1) Sarbadhikari and Katagiri are analogous art to the '266 patent; (2) Katagiri's communication network would be beneficial to the camera

system as described in Sarbadhikari; and (3) it was well-known in the art that a camera allows user to select or adjust algorithms as digital filters to perform image corrections for a captured image. Such modification with conventional skills of implementing a processor for performing image corrections based on user-adjustable variables stored in a memory would have been successful with reasonable expectation. *Supra* § XI(A).

173. Thus, claim 2 is obvious over Sarbadhikari and Katagiri.

D. <u>Claim 9</u>

174. Claim 9 is obvious over Sarbadhikari and Katagiri as explained below.

[9]: "The method of claim 2, wherein the user-adjustable variables include filter settings."

175. As explained in the '266 patent, digital filters are used to correct optical and digital aberrations. EX1001, 9:56. According to the '266 patent, digital aberrations are specific digital artifacts such as aliasing and dust. *Id*., 8:17-19. The '266 patent teaches that common digital filters include a low pass filter or *anti-aliasing* filter. *Id*., 31:46-49 (emphasis added). The '266 patent further states that a fast Fourier transform, which is an "*algorithm*" used to *sharpen* or soften an image, is also an example of the digital filters. *Id*., 31:50-56 (emphasis added).

176. As discussed, Sarbadhikari user-adjustable enhancement depending on specific image processing algorithm(s) that a user decides to use for correcting

captured images, and those algorithms are downloaded from the memory card 24 and stored in the RAM instruction memory 31 for performing image corrections for a captured image. *Supra* § XI(B)(3) and XI(C). In addition, Sarbadhikari specifically discloses that "[i]mage processing software, look-up tables, matrices, dynamic range optimization tables, and other files capable of affecting the captured image data can be included in the digital storage device." *Id*. "Typical algorithms which can be modified, or updated, thus include color filter array interpolation algorithms, noise reduction algorithms, edge sharpening algorithms, color reproduction algorithms, or dynamic range optimization algorithms." *Id*. "[T]he non-image data file would provide that the color reproduction should be optimized for skin tones, the edge sharpening should not be too severe, and the color filter array algorithm should minimize color aliasing at the expense of reduced sharpness." *Id*., 8:63-9-1. Sarbadhikari explains that the enhancement data files 24b are used "to *modify…the images captured by the camera*[.]" *Id*., 6:53-59 (emphasis added).

177. A POSA reading Sarbadhikari would have understood that Sarbadhikari's algorithms represent various types of digital filters including the digital filters taught in the '266 patent because these algorithms are used to enhance sharpness, minimize aliasing, reduce noise and so on for a captured image. As discussed, Sarbadhikari's enhancements vary depending on which algorithm(s)

a user specifies to use for correcting captured images. *Supra* § XI(B)(3) and XI(C).

178. It was well-known in the art to use user-adjustable filter settings for image corrections in an image processing system. *See* EX1061, 2:31-33, 2:37-40, 7:54-61 (teaching an electronic camera teach user-adjustable filters including dynamic controllable filer, vegetation, color balance and contrast adjustments); EX1026, [0006], [0038], [0059], [0061], [0066], [0074]-[0092], Figs. 2 and 7 (teaching an image processing device with a menu that allows user to select various filters including color tone correction, sharpness, noise removal, image size, display magnification, brightness and contrast to correct images take by a digital camera); EX1027, [0030], [0032] (teaching a camera with a filter selection button used by a user to select digital filer types including fog filter, motion blur filter, graded blue sky filter).

179. A POSA would have been motivated to modify Sarbadhikari in light of Katagiri because (1) Sarbadhikari and Katagiri are analogous art to the ’266 patent; (2) Katagiri’s communication network would be beneficial to the camera system as described in Sarbadhikari; and (3) it was well-known in the art that a camera allows user to select or adjust filters to perform image corrections for a captured image. Such modification with conventional skills of implementing a processor for performing image corrections based on user-adjustable filter settings

stored in a memory would have been successful with reasonable expectation. *Supra* § XI(A).

180. Thus, claim 9 is obvious over Sarbadhikari and Katagiri.

E. <u>Claim 10</u>

181. Claim 10 is obvious over Sarbadhikari and Katagiri as explained below.

[10]: "The method of claim 2, wherein the user-adjustable variables include special effects."

182. The '266 patent explains that special effects optical filters include "color enhancing, infrared and diffusion[.]" EX1001, 15:20-23. "Diffusion filters are categorized as soft effect, mist/fog, black mist, gold diffusion, and star and streak, with various degrees of diffusion producing lesser or greater distortions." *Id*., 15:24-28. "Portraits have traditionally used some sort of soft effect filtration approach which is producible in the camera using the methods described here." *Id*., 15:34-36.

183. As discussed, Sarbadhikari's enhancements vary depending on which algorithm(s) a user specifies to use for correcting captured images and these algorithms are downloaded from the memory card 24 and stored in the RAM instruction memory 31 for performing image corrections for a captured image. *Supra* § XI(B) and XI(C). In addition, Sarbadhikari specifically discloses that "[s]uch non-image files, which cause processing of the captured image data, may

process the captured image data such that the most 'true-to-scene' reproduction is achieved, or instead provide *special effects* of the kind which change the image into some desired alteration of the original scene. EX1004, 5:5-10, Fig. 2 (emphasis added). "For instance, performance enhancements, such as special set-up for portraiture, can be identified; processing enhancements, such as *special effects*, can be identified; and overlay enhancements, such as birthday or holiday picture borders, can be identified." *Id*., 7:40-43 (emphasis added). "An appropriate set of parameters for image capture would be incorporated in the associated non-image data file." *Id*., 8:61-9:1. "One possible application is *portraits*." *Id*. (emphasis added). "In this application, the non-image data file would provide that the color reproduction should be optimized for skin tones, the edge sharpening should not be too severe, and the color filter array algorithm should minimize color aliasing at the expense of reduced sharpness." *Id*.

184. A POSA reading Sarbadhikari would have understood that Sarbadhikari's enhancements vary depending on which special effect(s) a user selects to use for correcting captured images and these special effects are downloaded from the memory card 24 and stored in the RAM instruction memory 31 for performing image corrections for captured images.

185. It was well-known in the art to use user-adjustable special effects to perform image corrections for a captured image in an image processing system.

See EX1026, [0006], [0038], [0059], [0061], [0066], [0074]-[0092], Figs. 2 and 7 (teaching an image processing device with a menu that allows user to select various filters including "color tone correction", "sharpness", "noise removal", "image size", and "display magnification," "brightness" and "contrast" to correct images taken by a digital camera); EX1027, [0030], [0032] (teaches a camera with a filter selection button used by the user to select digital filer types including fog filter, motion blur filter, graded blue sky filter); EX1017, [0033], [0071] (teaching a camera that can process user-adjustable "image correction parameters" determined by a user via a graphical user interface to perform image corrections and the "image correction parameters can be used by an appropriate image processing algorithm to reduce and/or correct for image sharpness, contrast and color[.]").

186. A POSA would have been motivated to modify Sarbadhikari in light of Katagiri because (1) Sarbadhikari and Katagiri are analogous art to the '266 patent; (2) Katagiri's communication network would be beneficial to the camera system as described in Sarbadhikari; and (3) it was well-known in the art that a camera allows user to apply special effects to perform image corrections for captured images. *Supra* § XI(A). Such modification with conventional skills of implementing a processor for performing image corrections based on user-

adjustable special effects stored in a memory would have been successful with reasonable expectation. *Supra* § XI(A).

187. Thus, claim 10 is obvious over Sarbadhikari and Katagiri.

F. <u>Claim 20</u>

188. Claim 20 is obvious over Sarbadhikari and Katagiri as explained below.

[20]: "The method of claim 1, wherein the wirelessly transmitting images includes automatically transmitting the at least one of the one or more corrected images."

189. Claim 20 depends on claim 1. Claim 20 further limits that the wireless transmission of the at least one corrected image as recited in claim 1 is carried out *automatically*. (emphasis added). As I discussed, the implementation to use wireless communication to transfer images from a camera to an external computer would have been within a POSA's level of ordinary skill. *Supra* § XI(A) and XI(B)(8).

190. Katagiri teaches "automatically transmitting the at least one of the one or more corrected images" recited in claim 20. Specifically, Katagiri teaches that "*when* the surveillance target area is imaged by the surveillance camera 2, data from the image is transmitted from the surveillance camera 2 to the controller." EX1006, [0021] (emphasis added). A POSA reading Katagiri would have understood that Katagiri's surveillance camera 2 transmits the image data to the

controller 3 in real time *when* the image data is obtained by the camera without waiting for a command or a request from a user for image transmission. According to Katagiri, the three requests sent from the controller 3 to the surveillance camera 2 are merely the requests for "establishing a communication between the surveillance camera 2," "switching image data transmitted from the surveillance camera 2" and "operation of the surveillance camera 2." *Id*., [0022]. This makes sense as Katagiri teaches a surveillance camera essentially requires transmission of images in real time instead of manual transmission based on operator's command or request.

191. It was also well-known in the art that automatic image transmission from a camera to an external device makes it easier and faster than manual transmission for users. *See* EX1031, Abstract, [0005], [0008], [0014]-[0018], [0025], [0029] (teaching a camera that can transfer image data *automatically* to a communications device over a wireless link without the need for specific user conscious interaction with the camera to establish a data connection with a mobile telephone and the camera when the user's attention should be primarily directed to the telephone conversation itself) (emphasis added); EX1032, Abstract, [0005]-[0006], [0011], [0013], [0244], [0259], [0306] (teaching an electronic camera (100) that can automatically transmit captured image data to a gateway server (160) over a wireless portable telephone link (130) so that users with little knowledge of

image transmission systems such as children and the elderly and even the users with extensive knowledge of image transmission system do not need to spend time on time consuming manual image transmissions); EX1033, [0004], [0023], [0037], [0063], [0064], [0070], [0072] (teaching a digital camera (10) which can be connected to a host computer (40) via wireless interface and can transfer image data from the digital camera (10) to the host computer 40 *automatically* when an image has been captured and stored in the digital camera in a simple operation for displaying a captured image on the display of the host computer immediately) (emphasis added); *see also* EX1034, [0004], [0006], [0038], [0064], [0065], [0071], [0073] (teaching a similar digital camera with similar functionalities as taught by Wolf).

192. A POSA would have been motivated to make such modification because such modification would be beneficial to the camera type as described in Sarbadhikari and Katagiri as wireless transmission of the corrected images can be carried out automatically without user's manual operation, and therefore the transmission of the corrected image data between the camera system and external device such as a personal computer can be implemented in a faster and easier manner.

193. Moreover, a POSA would have had a reasonable expectation of success in this modification to allow Sarbadhikari's camera to transfer images to

an external computer automatically by programmatic data exchange between the camera and the external device with straightforward and routine design choices in the art, requiring only conventional skills.

194. Thus, the combination of Sarbadhikari and Katagiri renders claim 20 obvious.

G. <u>Claim 22</u>

195. Claim 22 is obvious over Sarbadhikari and Katagiri as explained below.

1. Claim [22PRE]: "A method of displaying one or more images captured by a digital camera on an external monitor, comprising:"

196. To the extent claim [22PRE] is limiting, Sarbadhikari teaches or at least renders claim [22PRE] obvious.

197. For example, Sarbadhikari teaches in claim 6 that "An electronic imaging system … wherein said player device comprises a computer that can be optionally attached to *a display screen* or a printer *for display* or printing of *the captured images*, respectively." EX1004, 12:55-58, Fig. 11.

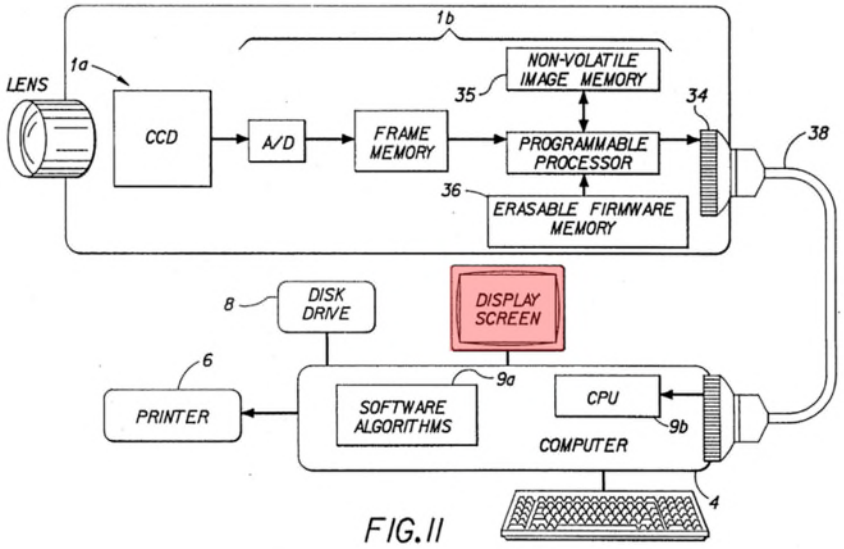

EX1004, Fig. 11

198. A POSA would have understood that the display screen described in claim 6 and illustrated in Figure 11 of Sarbadhikari is the claimed "external monitor" that displays one or more captured images by Sarbadhikari's camera.

199. Thus, Sarbadhikari teaches or at least renders claim [22PRE] obvious.

2. Claim [22A-1]: "digitally processing at least one captured image to produce one or more corrected image, the processing using in-camera hardware and software that is configured to:"

200. Sarbadhikari teaches or at least renders limitation [22A-1] obvious for the reasons given regarding limitation [1A-1] and [1B]. *Supra* § XI(B)(2) and (7).

3. Claim [22A-2]: "perform a plurality of image correction algorithms,"

201. Sarbadhikari teaches or at least renders limitation [22A-2] obvious for the reasons given regarding limitation [1A-2]. *Supra* § XI(B)(3).

4. Claim [22A-3]: "process image correction data stored in a database system,"

202. Sarbadhikari teaches or at least renders limitation [22A-3] obvious for the reasons given regarding limitation [1A-3]. *Supra* § XI(B)(4).

5. Claim [22A-4]: "store updated software or image correction data or both, and,"

203. Sarbadhikari teaches or at least renders limitation [22A-4] obvious for the reasons given regarding limitation [1A-4]. *Supra* § XI(B)(5).

6. Claim [22A-5]: "upgrade the digital camera with the updated software or image correction data or both; and"

204. Sarbadhikari teaches or at least renders limitation [22A-5] obvious for the reasons given regarding limitation [1A-5]. *Supra* § XI(B)(6).

7. Claim [22B]: "wirelessly transmitting at least one of the one or more corrected images in a format that the external monitor can receive,"

205. Sarbadhikari teaches or at least renders claim [22B] obvious in light of Katagiri.

206. Limitation [22B] recites limitation [1C]'s "wireless transmitting at least one or more of the corrected images" (which Sarbadhikari and Katagiri render obvious for the reasons discussed in detail in § XI(B)(8)) and adds "in a format that the external monitor can receive[.]"

207. Sarbadhikari discloses that "[t]he digital signal processor 22 compresses each still image stored in the image buffer 18 according to a known

image compression algorithm, such as the well-known *JPEG (Joint Photographic Experts Group)* discrete cosine transformation-based compression algorithm" and "[t]he processor 22 applies a compression algorithm from the memory 28 to the digital image signals, and sends the compressed signals to a removable storage device via an interface 26." EX1004, 6:33-40 (emphasis added). "[T]he images are transferred from the camera to the computer via the removable memory, rather than a cable interface." *Id*., 8:23-26, Fig. 2. And the display screen in Fig 2 can display the images stored in the removable storage device (i.e., memory card 24). *Id*., 12:14-35, 55-58, Fig. 2. In addition to the teachings of Sarbadhikari, Katagiri also teaches that its surveillance camera wirelessly transmits the corrected images via a communication network 4 (e.g., Wireless Lan, Bluetooth) to an external image display unit 31 for displaying the images. EX1006, [0020], [0023], [0024], [0053], [0066], [0082], [0118], [0019], Figs. 1 and 6.

208. A POSA would have understood that the "JPEG" as taught in Sarbadhikari is the claimed "format" that was standard, widely used, and that monitors would be able to receive and display files in that format within a POSA's level of ordinary skill. *See* EX1035, [0001] ("The present invention relates to an image expansion and display technique for expanding a JPEG compressed digital image data and outputting the data to a monitor built in a system or an external display device"); EX1036, Abstract, [1005]-[1006], [0033] (teaching "[a] wireless

link between a hand-held or portable device and a display device (projector)" and a DSP processing "JPEG decompression code" to offer cable-like connectivity from a remote device to a wireless projector").

209. Thus, Sarbadhikari renders limitation [22B] obvious in light of Katagiri.

8. Claim [22C]: "wherein the in-camera software and database system are upgradable to provide improved algorithms and correction data for correction of images."

210. Sarbadhikari renders limitation [22C] obvious in light of Katagiri for the reasons given regarding limitation [1D]. *Supra* § XI(B)(9).

H. <u>Claim 23</u>

211. Claim 23 is obvious over Sarbadhikari and Katagiri as explained below.

[23]: "The method of claim 22, wherein the digitally processing at least one captured image further comprises: electronically reading stored user-adjustable variables; and processing image corrections using the user-adjustable variables."

212. Claim 23 depends on claim 22. Claim 23 is obvious over Sarbadhikari and Katagiri for the reasons given regarding claims 2 and 22. *Supra* § XI(C) and (G).

XII. GROUND 2: CLAIMS 2-10, 13-19, 24, 27 AND 30 WOULD HAVE BEEN OBVIOUS IN LIGHT OF SARBADHIKARI, KATAGIRI AND IWASAWA

213. Claims 2-10, 13-19, 24, 27 and 30 are obvious over Sarbadhikari and Katagiri and Iwasawa.

A. Motivation to Combine

214. This section provides an overview of the reasons why a POSA would have been motivated to combine the disclosures of Sarbadhikari, Katagiri and Iwasawa in a way that would yield the alleged inventions claimed in the ’266 patent, and also explains why a POSA reasonably would have expected success in doing so. This section applies to my assessment of the obviousness set out in the sections that follow. Those sections also have further discussion of the motivation to combine references as to those specific claims.

215. As discussed, both Sarbadhikari and Katagiri are analogous art to the ’266 patent. *Supra* § XI(A). Iwasawa is directed at an electronic still camera or a video camera with a lens (201) and an image sensor (i.e., CCD 202) to capture images and perform shading corrections for the captured images based on updatable program and updatable shading correction data stored in a rewritable memory (i.e., RAM) corresponding to user-adjustable optical parameters such as zoom position, aperture setting and lens type. EX1005, [0001], [0019]-[0021], [0027], Fig. 2. Thus, Iwasawa is in the same field of endeavor and pertinent to the

problem the ’266 patent sought to solve notably because the ’266 patent also sought to perform optical aberration corrections due to optical characteristics such as aperture setting and lens focal length. EX1001, 10:41-11:30; 8:14-19. Thus, Iwasawa is also analogous art to the ’266 patent. Moreover, Sarbadhikari, Katagiri, Iwasawa and the ’266 patent all list the H04N subclass under the International Classification.

216. Sarbadhikari teaches user-adjustable exposure settings including aperture and shutter speed settings for image capturing. EX1004, 5:11-14, 6:13-18, 6:53-59, 7:15-50, Fig. 3. Iwasawa teaches a “shading” problem that varies due to the change of aperture value, zoom position, and lens type. EX1005, [0004], [0005]. A POSA would have understood from Iwasawa’s teachings that it would be beneficial to the camera disclosed in Sarbadhikari and Katagiri by adding a shading correction capability as described in Iwasawa to the camera of Sarbadhikari and Katagiri. Sarbadhikari teaches various user-adjustable optical parameters such as aperture setting and exposure time (i.e., shutting speed). EX1004, 5:11-14. Iwasawa not only teaches various optical parameters including aperture value, zoom position, and lens type of the optical lens, but also teaches a problem called “shading” that may vary depending on the characteristics represented by optical parameters settings of individual lens or cameras. EX1005, [0004], [0005]. A POSA would have understood that Sarbadhikari’s camera would

have had the same problem of "shading" due to the lens type and/or the optical parameters settings. Thus, a POSA would have understood that Iwasawa's shading correction capability based on shading correction data stored in a memory associated with lens type and optical parameters for image capturing would be beneficial to the camera of Sarbadhikari and Katagiri.

217. As Iwasawa teaches shading correction capabilities including its program for calculating and storing shading correction data to solve the shading problem that may be caused by Sarbadhikari's camera in which exposure settings including aperture settings are user-adjustable variables, a POSA would have been motivated to modify the camera as described in Sarbadhikari by adding Iwasawa's shading correction process and shading correction data to Sarbadhikari's camera system to solve the "shading" problem, thereby improving the image quality.

218. Indeed, it was well-known in the art that a camera or an imaging system can perform not only shading correction as taught in Iwasawa but also various types of image corrections such as white balance, color (chromatic), sharpness corrections or optimizations as described in Sarbadhikari and Katagiri, respectively. *See* EX1019, 7:55-8:22 (teaching a digital camera performing image corrections for vignetted image), 5:56-64 (teaching that the camera can perform chromatic aberration corrections using interpolating process), 3:32-38 (teaching that the camera processes white balance control, color balance control and

sharpness control of image data); EX1018, Abstract (teaching a digital camera performing shading corrections for captured images using correction tables), [0086] (teaching a WB circuit that adjusts a white balance of captured image); EX1065, 12:10-18 (teaching a photoprinter 10 that performs shading corrections), 1:37-48 (teaching that a photoprinter can perform corrections of color, sharpness, edge brightness, etc.); EX1015, 24:10-14, 60:19-23, 63:39-57, 70:2-9 (teaching a photoprinter that can perform shading correction), 24:54-60; 63:54-56; 9:28-30 (teaching using look-up tables to process image corrections such as color balance adjustment, contrast adjustment and brightness adjustment); 49:30-40 (teaching using interpolating process to perform chromatic aberration corrections); EX1059, [0012], [0036] (teaching a digital camera that performs corrections for vignetting), [0053], [0054] (teaching that image can be enhanced due to chromatic aberration and aliasing); EX1017, [0061]-[0070] (teaching a camera that can correct for light falloff at the corners of a captured image or "vignetting"), [0071] (also teaching image sharpness, contrast and color corrections).

219. A POSA would have had a reasonable expectation of success in modifying the camera of Sarbadhikari and Katagiri with straightforward and routine in the art, requiring only conventional skills because a POSA would have simply used Sarbadhikari's processor (20) to execute Iwasawa's shading correction process including the program for calculating and storing shading correction data

and Sarbadhikari's RAM instruction memory (31) and/or memory card (24) to store Iwasawa's shading correction data corresponding to aperture value, zoom position or lens type as taught in Iwasawa.

B. <u>Claim 2</u>

220. Claim 2 is obvious over Sarbadhikari, Katagiri and Iwasawa as explained below.

[2]: "The method of claim 1, wherein the digitally processing at least one captured image further comprises: electronically reading stored user-adjustable variables; and processing image corrections using the user-adjustable variables."

221. Iwasawa teaches an input device having an optical system lens for an electric still camera, a video camera, etc., for obtaining a video signal, and an image input device for obtaining a video signal. EX1005, [0001]. Iwasawa also teaches a shading correction method for an image input device that corrects shading characteristics. *Id*. According to Iwasawa, "the shading correction data is selected by switching means by the control signal output from the optical lens, and the image signal converted into a digital signal by the signal conversion means is multiplied by the shading correction data selected by the switching means." *Id*., [0007]. "[B]y performing a digital operation for multiplying the shading correction by the *digitally* converted image signal as means for performing shading correction, it is possible to perform high-speed and accurate shading correction[.]"

Id., [0008] (emphasis added). Thus, a POSA would have understood that Iwasawa's shading correction digitally processes or corrects a captured image.

222. In addition, Iwasawa's camera has an "optical lens 201 capable of outputting one or more control signals of an aperture value, a zoom position, and a lens type." *Id*., [0015], Fig. 2. Iwasawa explains that the aperture value, the zoom position, and the lens type of the optical lens can be "*changed*." *Id*., [0008], [0027] (emphasis added).

223. A POSA reading Iwasawa would have understood that Iwasawa's aperture value, zoom position, and lens type of the optical lens are variables that are adjustable. Although Iwasawa does not expressly teach that these variables are user-adjustable, Sarbadhikari teaches that various control capture parameters (i.e., variables) such as aperture setting are user-adjustable. EX1004, 5:11-15, 4:37-47; 7:44-50 (teaching that the "enhancement files" include "control capture parameters such as exposure time, aperture setting, flash range output, and so on" and "these files may be accessed automatically by the camera, or selected by the user by means of appropriate intervention through the camera"); *see also* EX1017, [0025], [0033] (teaches a camera that can use user-adjustable focal length, aperture value as image capture metadata to find or match, or generate appropriate correction parameters stored in the correction database to correct images).

224. Moreover, Iwasawa discloses that the "[a]ccording to the second embodiment, quick and accurate shading correction can be performed by performing shading correction by calculating shading correction data using the CPU 206 and writing to rewritable recording means, for example, the RAM 208, *reading out shading correction data* in response to an imaging signal read out from the CCD 202, and multiplying the imaging signal by a digital signal that has undergone A/D conversion." EX1005, [0021], Fig. 2 (emphasis added). Iwasawa further explains that "[t]he shading correction in this image input device stores the shading correction data corresponding to one or more conditions of the aperture value, the zoom position, and the lens type of the optical lens in the RAM 208, and when the imaging signal converted to a digital signal by the A/D converter 204 is multiplied by the shading correction data recorded in the RAM 208, writes, to the RAM 208, shading correction data suitable for the imaging optical system using a control signal obtained from the optical lens 201 by the CPU 206 that find the shading correction data of the imaging optical system via calculation." EX1005, [0020].

225. A POSA reading Iwasawa would have understood that Iwasawa teaches a camera which performs shading correction for captured images (the claimed "digitally processing at least one captured image") by reading out shading correction data corresponding to the aperture value, the zoom position, and the lens

type from the RAM 208 (the claimed "electronically reading stored user-adjustable variables) and processing the shading correction based on the shading correction data corresponding to the aperture value, the zoom position, and the lens type (the claimed "processing image corrections using the user-adjustable variables").

226. A POSA would have been motivated to modify the camera of Sarbadhikari and Katagiri in light of Iwasawa's camera by adding (1) Iwasawa's multiplier 209 to a position between Sarbadhikari's A/D 16 and processor 22, or alternatively adding the shading correction functionality to Sarbadhikari's processor 22 directly, and (2) Iwasawa's shading correction data corresponding to the user-adjustable aperture settings pre-stored in the RAM 208 to Sarbadhikari's RAM instruction memory 31 and memory card 24 to perform shading correction for a captured image. This is because (1) Sarbadhikari, Katagiri and Iwasawa are analogous art to the '266 patent; (2) Iwasawa's shading correction would be beneficial to the camera system as described in Sarbadhikari and Katagiri; and (3) it was well-known in the art that a camera or an imaging system can perform various types of image corrections including the shading correction for a captured image as described in Iwasawa and other types of image corrections as described in Sarbadhikari and Katagiri. Such modification would have been successful with reasonable expectation. *Supra* § XII(A)

227. Thus, claim 2 is obvious over Sarbadhikari, Katagiri and Iwasawa.

C. Claim 3

228. Claim 3 is obvious over Sarbadhikari, Katagiri and Iwasawa as explained below.

[3]: "The method of claim 2, wherein the user-adjustable variables include an aperture setting."

229. Claim 3 is obvious over Sarbadhikari, Katagiri and Iwasawa for the reasons given regarding claim 2. *Supra* § XII(B).

D. Claim 4

230. Claim 4 is obvious over Sarbadhikari, Katagiri and Iwasawa as explained below.

[4]: "The method of claim 2, wherein the user-adjustable variables include lens data."

231. Claim 4 depends on claim 2 and further limits that the user adjustable variables include lens data.

232. Sarbadhikari teaches enhancement files 24b including capture parameters such as aperture and exposure settings downloaded from the memory card 24 and stored in the RAM instruction memory 31. EX1004, 5:11-14. Sarbadhikari specifically teaches that these capture parameters are user-adjustable variables. EX1004, 6:13-18, 7:15-50, Fig. 3 (teaching that a user can use the operation display 30 and the user inputs section 21to specify desired capture parameters such as aperture value (i.e., diaphragm) and shutter speed (i.e.,

exposure time) for image capturing. Sarbadhikari also discloses that that its enhancement files include control capture parameters including exposure time and aperture setting, and the enhancement files can be used to modify the image captured by the camera. EX1004, 5:11-14, 6:53-59.

233. As discussed, Iwasawa teaches a camera that performs shading correction based on the shading correction data stored in the RAM 208 corresponding to user-adjustable aperture, zoom position, and lens type of the optical lens. *Supra* § XII(B). A POSA reading Iwasawa would have understood that Iwasawa's "aperture value," "zoom position" and "lens type of the optical lens" are the "lens data" as recited in claim 4 because each is an optical parameter representing optical characteristics of a lens at the time of image capturing.

234. To the extent it is found that the combination of Sarbadhikari, Katagiri and Iwasawa does not expressly teach the claimed "lens data" because the combination of Sarbadhikari, Katagiri and Iwasawa does not expressly disclose a user-adjustable "lens focal length" as described in the patent specification of the '266 patent (EX1001, 11:19-21, 26:18-20, 27:27-36, 31:7-32, 36:18-27), it was inherent or at least obvious to a POSA that the combination of Sarbadhikari, Katagiri and Iwasawa necessarily teaches or suggests a camera system using user-adjustable "lens focal length" to perform image corrections for captured images because Iwasawa's correction data corresponding to a specific zoom position of a

zoom lens is necessarily associated with a specific focal length of the lens. *See e.g.*, EX1055, 4:55-65, Table 1C (teaching that each zoom position of a zoom lens 10 has a corresponding EFL (i.e., effective focal length), which is a focal length).

235. It was well-known in the art to use image correction data corresponding to user-adjustable lens data such as lens type and lens focal length to process image corrections for captured images. *See* EX1018, [0058], [0060], [0084], [0177] (teaching that the focal length of a lens is user adjustable and a shading correction circuit 123 that can perform a shading correction with reference to a plurality of correction tables stored in the shading ROM 1532 for different optical conditions such as focal length at the time of imaging); EX1019, 2:59-60, 3:5-10, 4:16-20, 4:29-33, 6:23-30, 6:47-52, 8:27-41 (teaching a camera that can correct aberrations based on lens characteristics corresponding to lens data (e.g., switchable focal length) stored for every interchangeable lens, and in case of a zoom lens for a plurality of focal lengths); EX1017, [0025], [0033] (teaching a camera that can use user-adjustable focal length as a type of image capture metadata to find or match, or generate appropriate correction parameters stored in the correction database to correct images); EX1020, 3:65-4:4, 5:10-24, 7:56-64, 11:34-46 (teaching a camera that can perform aberration correction based on aberration correction data corresponding to photographer-adjustable focal length of lens).

236. A POSA would have been motivated to modify the camera of Sarbadhikari and Katagiri in light of Iwasawa's camera by adding (1) Iwasawa's multiplier 209 to a position between Sarbadhikari's A/D 16 and processor 22, or alternatively adding the shading correction functionality to Sarbadhikari's processor 22 directly, and (2) Iwasawa's shading correction data corresponding to the user-adjustable capture parameters such as aperture value, zoom position (i.e., focal length) and lens type pre-stored in the RAM 208 to Sarbadhikari's RAM instruction memory 31 and memory card 24 to perform shading correction for a captured image. This is because (1) Sarbadhikari, Katagiri and Iwasawa are analogous art to the '266 patent; (2) Iwasawa's shading correction would be beneficial to the camera of Sarbadhikari and Katagiri; and (3) it was well-known in the art that a camera or an imaging system can perform various types of image corrections including the shading correction using user-adjustable capture parameters such as aperture setting, zoom position (i.e., focal length), lens type of a lens (the claimed "lens data") for a captured image as described in Iwasawa and other types of image corrections as described in Sarbadhikari and Katagiri. *Supra* § XII(A)(B).

237. Such modification with conventional skills of implementing a processor for performing image corrections based on a user-adjustable capture parameter (the claimed "lens data") corresponding to an appropriate correction data

stored in a memory would have been successful with reasonable expectation. *Supra* § XII(A).

238. Thus, claim 4 is obvious over Sarbadhikari, Katagiri and Iwasawa.

E. <u>Claim 5</u>

239. Claim 5 is obvious over Sarbadhikari, Katagiri and Iwasawa as explained below.

[5]: "The method of claim 2, wherein the user-adjustable variables include shutter speed settings."

240. Claim 5 depends on claim 2 and further limits that the user adjustable variables include shutter speed settings.

241. Sarbadhikari teaches enhancement files 24b including capture parameters such as aperture and exposure settings downloaded from the memory card 24 and stored in the RAM instruction memory 31. EX1004, 5:11-14. Sarbadhikari specifically teaches that these capture parameters are user-adjustable variables. EX1004, 6:13-18, 7:15-50, Fig. 3 (teaching that a user can use the operation display 30 and the user inputs section 21to specify desired capture parameters such as aperture value (i.e., diaphragm) and *shutter speed* (i.e., exposure time) for image capturing)(emphasis added). Sarbadhikari also discloses that its enhancement files include control capture parameters including exposure time and aperture setting, and the enhancement files can be used to modify the image captured by the camera. EX1004, 5:11-14, 6:53-59.

242. As discussed, Iwasawa teaches or suggests a camera that can perform shading correction based on the shading correction data stored in the RAM 208 corresponding to user-adjustable aperture, zoom position, and lens type of the optical lens. *Supra* § XII(B). Thus, the combination of Sarbadhikari and Iwasawa teaches the shading correction data correspond to the shutter speed setting. Accordingly. the combination of Sarbadhikari and Iwasawa teaches the additional limitation recited in claim 5.

243. It was well-known in the art that shutter speed as well as aperture value are parameters of exposure for image capturing by a camera. *See* EX1026, [0057] (teaching that exposure time, shutter speed value, F number (i.e., aperture value), focal length value, subject distance, and so on are "photographing information"); EX1053, [0062] (teaching that shutter speed and aperture value are "exposure control values"); EX1044, [0024] (teaching that shutter speed and aperature [*sic*] are "typical photographic data"); EX1022, [0021] (teaching that aperture value and shutter speed are "exposure value"). And it was also well-known in the art that a camera can process image corrections for a captured image based on user-adjustable shutter speed settings. *See* EX1018, [0101], [0109], [0110], [0158] (teaching a camera that performs shading corrections using "tag information" such as "camera name, a lens name, a focal length at the time of exposure, an f-number at the time of exposure, an *exposure mode*, a focal

position…" to find appropriate correction table from a shading ROM 153 and that the exposure mode (i.e., normal exposure mode and gradation control process mode) is user-adjustable and varies shutter speed settings) (emphasis added); EX1062, [0028],[0049], [0087], [0091], [0092], [0137] Figs. 4 and 6 (teaching a digital camera performing shading correction using prestored correction data when a specific shutter speed value is detected); EX1064, Figs. 3 and 5 (teaching a digital camera performing shading correction using prestored correction data when a specific shutter speed value is detected).

244. A POSA would have been motivated to modify the camera type described in Sarbadhikari and Katagiri in light of Iwasawa by adding (1) Iwasawa's multiplier 209 to a position between Sarbadhikari's A/D 16 and processor 22, or alternatively adding the shading correction functionality to Sarbadhikari's processor 22 directly, and (2) Iwasawa's shading correction data corresponding to a user-adjustable capture parameter such as Sarbadhikari's shutter speed settings pre-stored in Iwasawa's RAM 208 to Sarbadhikari's RAM instruction memory 31 and memory card 24 to perform shading correction for a captured image. This is because (1) Sarbadhikari, Katagiri and Iwasawa are analogous art to the '266 patent; (2) Iwasawa's shading correction would be beneficial to the camera of Sarbadhikari and Katagiri; and (3) it was well-known in the art that a camera or an imaging system can perform various types of image

corrections including the shading correction using user-adjustable capture parameters such as exposure mode settings including aperture and shutter speed settings, zoom position (i.e., focal length), lens type of a lens for a captured image as described in Iwasawa and other types of image corrections as described in Sarbadhikari and Katagiri. *Supra* § XII(A)

245. Such modification with conventional skills of implementing a processor for performing image corrections based on a user-adjustable capture parameter such as shutter speed corresponding to an appropriate correction data pre-stored in a memory would have been successful with reasonable expectation. *Supra* § XII(A).

246. Thus, claim 5 is obvious over Sarbadhikari, Katagiri and Iwasawa.

F. <u>Claim 6</u>

247. Claim 6 is obvious over Sarbadhikari, Katagiri and Iwasawa as explained below.

[6]: "The method of claim 2, wherein the user-adjustable variables include ISO settings."

248. In cameras, ISO is a numerical measure of the sensitivity of the image receiver, whether film or digital. *See e.g.*, EX1022, [0022]. In digital cameras, ISO is adjusted by changing the gain of the amplifier receiving the electrical signal from the CCD image sensor. *Id*. And it was well-known in the art that ISO can be changed automatically, or in response to a user adjustment. *See e.g., id.*, [0021]

(teaching that "[u]nder normal circumstances, the *CPU 1 sets the ISO speed in conformance to a photographer operation* and calculates an exposure value (an aperture value and a shutter speed) based upon the ISO speed that has been set and the photometering output from the photometering circuit 2" and "if the blur preventing mode has been set, it calculates the exposure value by *automatically adjusting the ISO speed* setting as appropriate for the circumstances[.]") (emphasis added); EX1023, [0032], [0034], [0038], [0040](teaching that "*[t]he user can select* the intended image quality *by adjusting* the three items: the color reproducing condition, *the ISO sensitivity*, and the number of recording pixels in the image quality selection screen 31") (emphasis added).

249. Sarbadhikari teaches enhancement files 24b including capture parameters such as aperture and shutter speed settings downloaded from the memory card 24 and stored in the RAM instruction memory 31. EX1004, 5:11-14. Sarbadhikari also teaches that these capture parameters are user-adjustable variables. EX1004, 6:13-18, 7:15-50, Fig. 3 (teaching that a user can use the operation display 30 and the user inputs section 21to specify desired capture parameters such as aperture value (i.e., diaphragm) and shutter speed (i.e., exposure time) for image capturing). In addition, Sarbadhikari specifically discloses that "[t]he card also includes special access codes for exposure index, color/monochrome, color reproduction and portrait." *Id*., 9:64-10:4. "[T]he camera

may include *variable gain corresponding, e.g., to ISO exposure indexes of 50, 100, 200, and 400*." *Id*. (emphasis added). "For normal cards, the camera speed is set at ISO 100." *Id*. "For software enhanced cards, the camera checks to see which speed should be used for the photos, depending on which version of the card the user has inserted into the camera." *Id*., Fig. 7.

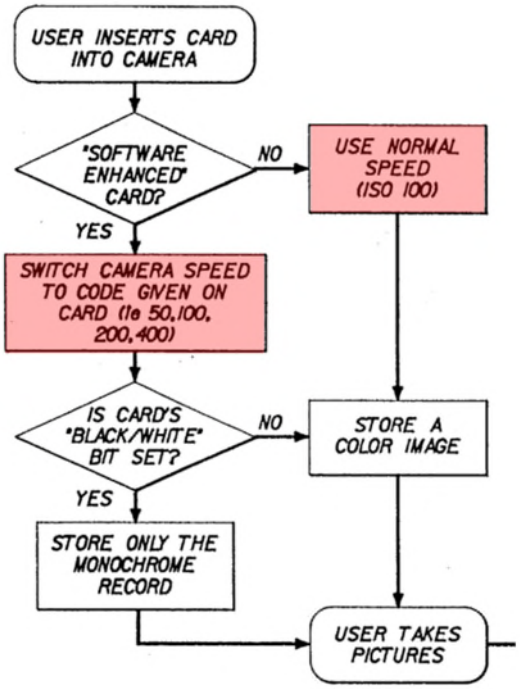

EX1004, Fig. 7 (excerpted)

250. Sarbadhikari teaches that "[w]hen the card 24 is inserted into the camera 1, the camera checks to determine if the card is a normal memory card, or a 'software enhanced' card." *Id*., 9:58-60. "For normal cards, the normal processing is used. *Id*., 10:14-18. "For 'software enhanced' cards, more elaborate color reproduction algorithms might be used, to provide higher quality images." *Id*.

251. A POSA would have understood from the teachings of Sarbadhikari that the ISO settings are user-adjustable because they can be determined by user's selection of the enhancement files from the software enhanced cards, or at least by user's selection of using either the "normal cards" or the "software enhanced cards" that have different ISO settings. It was well-known in the art that ISO settings may cause exposure settings to change or may change depending on exposure settings. *See e.g.*, EX1023, [0033] (teaching that "[t]he ISO sensitivity can be adjusted by the charge accumulation time [exposure time]"); EX1022, [0023] (teaching that "[t]he shutter speed to be used as a parameter can be calculated based upon the photometering results and the ISO speed setting"); EX1025, [0014] (teaching that "the information that pertains to image sensing includes at least one of three factors, i.e., a temperature, an accumulation time of the image sensing element [exposure time], and an ISO speed"). It was also well-known in the art to use ISO settings to perform image correction for a captured image (including certain type of shading correction). *See* EX1062, [0027], [0028], [0030], [0049] (teaching an electronic camera that performs horizontal dark shading correction using correction data prestored in a nonvolatile memory corresponding to various parameters including ISO speed); EX1063, [0040], [0062], [0169]-[0178] (teaching an electronic camera that has a nonvolatile memory storing one-dimensional dark fixed pattern noise correction data

corresponding to each ISO sensitivity); EX1064, [0032], [0051] (teaching an electronic camera that performs horizontal dark shading correction using prestored correction data corresponding various parameters including setting values for ISO sensitivity).

252. As discussed, Iwasawa teaches or suggests a camera that can perform shading correction based on the shading correction data stored in the RAM 208 corresponding to user-adjustable aperture, zoom position, and lens type of the optical lens. *Supra* § XII(B). Thus, the combination of Sarbadhikari's user-adjustable ISO settings and Iwasawa's shading correction data discloses the additional limitation of claim 6.

253. A POSA would have been motivated to modify the camera system disclosed in Sarbadhikari and Katagiri in light of Iwasawa by adding (1) Iwasawa's multiplier 209 to a position between Sarbadhikari's A/D 16 and processor 22, or alternatively adding the shading correction functionality to Sarbadhikari's processor 22 directly, and (2) Iwasawa's shading correction data corresponding to Sarbadhikari's user-adjustable ISO settings to Sarbadhikari's RAM instruction memory 31 and/or memory card 24 to perform correction for a captured image. This is because (1) Sarbadhikari, Katagiri and Iwasawa are analogous art to the '266 patent; (2) Iwasawa's shading correction would be beneficial to the camera system as described in Sarbadhikari and Katagiri; and (3) it was well-known in the

art that a camera or an imaging system can perform various types of image corrections including image correction using user-adjustable ISO settings for a captured image. *Supra* §§ XII(A) and VIII(M).

254. Such modification with conventional skills of implementing a processor for performing image corrections based on correction data stored in a memory corresponding to user-adjustable ISO settings would have been successful with reasonable expectation. *Supra* § XII(A).

255. Thus, claim 6 is obvious over Sarbadhikari, Katagiri and Iwasawa.

G. <u>Claim 7</u>

256. Claim 7 is obvious over Sarbadhikari, Katagiri and Iwasawa as explained below.

[7]: "The method of claim 2, wherein the user-adjustable variables include subject type."

257. Sarbadhikari teaches that "[a]part from updating camera algorithms, the enhanced algorithm files might be tailored in a specific manner for memory cards sold for particular applications" such as "action photography, portraiture, or infant photography." EX1004, 8:50-9:1. Sarbadhikari explains that the enhance files (i.e., non-image data) for portraits as one possible application "would provide that the color reproduction should be optimized for skin tones, the edge sharpening should not be too severe, and the color filter array algorithm should minimize color aliasing at the expense of reduced sharpness." *Id*. According to Sarbadhikari, the

enhancement data files 24b are used "to *modify…the images captured by the camera*[.]" (emphasis added).

258. A POSA reading Sarbadhikari would have understood that Sarbadhikari's enhancement files include certain parameters that can be adjusted by a user depending on specific subject types such as portraits and such parameters can be used to perform image correctios for captured images.

259. In addition to Sarbadhikari, Iwasawa also teaches processing shading correction corresponding to the scene of subject. For example, Iwasawa specifically teaches that "by configuring such that programs operated by the CPU 206 can be changed from the outside, shading correction according to *the scene of the subject*, for example, backlight correction or shooting according to illumination becomes possible, and flexible handling becomes possible because the program for calculating shading correction data can be updated when a different type of optical lens is adopted." EX1005, [0021] (emphasis added). Thus, the combination of Sarbadhikari's user-adjustable subject type and Iwasawa's shading correction data discloses the shading correction data that corresponds to the subject types. Thus, the combination of Sarbadhikari and Iwasawa discloses the additional limitation of claim 7.

260. Indeed, it was well-known in the art that a camera user can select the scene classification corresponding to the subject type of the scene. *See* EX1061,

2:67-3:13, 5:66-6:8, Fig. 3 (teaching a camera with a "guided mode" that user is prompted with choices based on scene components detected in the image (e.g., faces, buildings, vegetation, etc.).

261. A POSA would have been motivated to modify the camera system disclosed in Sarbadhikari and Katagiri in light of Iwasawa the type of camera system described in Sarbadhikari and Katagiri in light of Iwasawa's camera system by adding (1) Iwasawa's multiplier 209 to a position between Sarbadhikari's A/D 16 and processor 22, or alternatively adding the shading correction functionality (including Iwasawa's program for calculating shading correction data corresponding to the "scene of the subject") to Sarbadhikari's processor 22 directly, and (2) Iwasawa's shading correction data corresponding to the user-adjustable subject type (as taught in both Sarbadhikari and Iwasawa) to Sarbadhikari's RAM instruction memory 31 and memory card 24 to perform shading correction for a captured image. This is because (1) Sarbadhikari, Katagiri and Iwasawa are analogous art to the '266 patent; (2) Iwasawa's shading correction would be beneficial to the camera system as described in Sarbadhikari and Katagiri; and (3) it was well-known in the art that a camera or an imaging system can perform various types of image corrections including the shading correction using user-adjustable subject type for a captured image as described in Iwasawa

and other types of image corrections as described in Sarbadhikari and Katagiri. *Supra* § XII(A).

262. Such modification with conventional skills of implementing a processor for calculating image correction data corresponding to the scene of the subject and performing image corrections based on a user-adjustable capture parameter such as subject type corresponding to an appropriate correction data stored in a memory would have been successful with reasonable expectation. *Supra* § XII(A).

263. Thus, claim 7 is obvious over Sarbadhikari, Katagiri and Iwasawa.

H. <u>Claim 8</u>

264. Claim 8 is obvious over Sarbadhikari, Katagiri and Iwasawa as explained below.

[8]: "The method of claim 2, wherein the user-adjustable variables include tonal range corrections."

265. As explained by the '266 patent, "the tonal range of an image data set is enhanced in-camera by using meta-data to sample *the range of shadow and highlight detail*." EX1001, 14:49-56 (emphasis added). "The data sets are interpolated to add requested shadow detail and/or highlight detail." *Id*. "Obviously, some subjects require more or less *shadow or highlight* (or both), which the camera can correspondingly adjust." *Id*. (emphasis added) "These tonal range corrections are user-adjustable." *Id*.

266. To adjust tonal range, the ’266 patent explains a few examples. First, the ’266 patent explains that tonal range can be adjusted by manipulating “lens aperture.” *Id*., 14:27-48. Second, the ’266 patent explains another way to enhance tonal range by using “meta-data” to “sample the range of shadow and highlight detail.” *Id*., 14:57-56. The ’266 patent, however, explains that an “analysis of meta-data to color-correct the digital capture resulting in moiré-free images” is prior art. Third, the ’266 patent teaches that “in-camera tonal range corrections” can be made by “manipulating the aperture and shutter speed.” *Id*., 14:57-60. The ’266 patent further explains that the tonal range corrections can be made in association with specific scenes or image type stored in the database. *Id*., 14:60-67, 15:12-17.

267. A POSA reading the ’266 patent would have understood that the claimed “tonal range corrections” can be made using user-adjustable variables including “aperture setting” recited in claim 3, “shutter speed” recited in claim 5 and “subject type” recited in claim 7.

268. Thus, claim 8 is obvious over Sarbadhikari, Katagiri and Iwasawa for the reasons given regarding claims 3, 5 and 7. *Supra* § XII(C)(E) and (G).

I. <u>Claim 9</u>

269. Claim 9 is obvious over Sarbadhikari, Katagiri and Iwasawa as explained below.

[9]: "The method of claim 2, wherein the user-adjustable variables include filter settings."

270. As explained previously, Sarbadhikari teaches the "user-adjustable variables include filter settings" recited in claim 9. *Supra* § XI(D).

271. A POSA would have been motivated to modify the camera of Sarbadhikari and Katagiri in light of Iwasawa's camera and such modification would have been successful with reasonable expectation. *Supra* § XII(A) and (B).

J. <u>Claim 10</u>

272. Claim 10 is obvious over Sarbadhikari, Katagiri and Iwasawa as explained below.

[10]: "The method of claim 2, wherein the user-adjustable variables include special effects."

273. As explained previously, Sarbadhikari teaches the "user-adjustable variables include special effects" recited in claim 10. *Supra* § XI(E).

274. A POSA would have been motivated to modify the camera of Sarbadhikari and Katagiri in light of Iwasawa's camera and such modification would have been successful with reasonable expectation. *Supra* § XII(A) and (B).

K. <u>Claim 13</u>

275. Claim 13 is obvious over Sarbadhikari, Katagiri and Iwasawa as explained below.

[13]: "The method of claim 1, wherein the in-camera software processes image corrections based on one or more prior image corrections."

276. The '266 patent teaches that "each lens with a unique optical formula will have specific aberrations, the *corrections* for which will be accessible in a database." EX1001, 11:28-30 (emphasis added). "The purpose of the pre-programmed modules is to access *a preset library of (a) typical corrections of lenses*, (b) typical scene types with appropriate exposure modes, (c) specific effects that may be selected and (d) specific sensor functions." *Id*., 22:35-39 (emphasis added). "The camera's database is accessed to retrieve the *corrections* (2520) and the interactive feedback mechanism is activated (2530)." *Id*., 35:48-50 (emphasis added). APOSA would have understood that the "corrections" recited in claim 13 could mean correction data stored in the database.

277. As discussed, Sarbadhikari discloses using in-camera software to process image corrections. *Supra* § XI(B). Iwasawa, in its second embodiment, teaches that its image input device (e.g., digital camera) has a CPU (206) that can execute a program to calculate shading correction data in response to a control signal from the optical lens and *writes* the calculated shading correction data *suitable for* the imaging optical system to the RAM 208. EX1005, [0019], Fig. 2 (emphasis added). According to Iwasawa, "[t]he shading correction in this image input device stores the shading correction data corresponding to one or more conditions of the aperture value, the zoom position, and the lens type of the optical

lens in the RAM 208." *Id*., [0020]. Iwasawa discloses that "[a]ccording to the second embodiment, *quick and accurate* shading correction can be performed by performing shading correction by calculating shading correction data using the CPU 206 and writing to rewritable recording means, for example, the RAM 208, reading out shading correction data in response to an imaging signal read out from the CCD 202, and multiplying the imaging signal by a digital signal that has undergone A/D conversion." *Id*., [0021] (emphasis added). Iwasawa further teaches that "the present invention can perform shading correction by selecting the type of shading correction data based on the control signal of the aperture value, the zoom position, and the lens type output from the optical lens 101, detecting the position of the screen using the address synchronized to the CCD drive pulse, and operating with the imaging signal using the multiplier 111, thereby making it possible to perform shading correction quickly, stably, and accurately without variation in the elements or change over time." EX1005, [0018].

278. A POSA reading Iwasawa would have understood that the newly calculated shading correction data stored in the RAM is read out again by the CPU and used to perform shading correction when the image is captured under the same capturing or optical conditions (e.g., aperture, zoom position) without the CPU having to execute the program to calculate shading correction data again. In other words, Iwasawa's camera system performs shading correction (the claimed "image

corrections") based on the shading correction data that CPU previously calculated in response to the previously detected lens parameters and previously stored shading correction data (the claimed "prior image corrections") in the RAM. This makes sense because Iwasawa explains that "quick and accurate" shading correction can be performed. And, it was well-known in the art to calculate correction data for correcting captured images, store the newly calculated correction data and readout the previously calculated and stored correction data for correcting images captured next time under the same capturing conditions. *See* EX1017, [0021], [0025], [0028](teaching a digital camera that can determine (calculate) correction parameter (correction data) associated with the detected capture metadata 14 (e.g., lens focal length, aperture value, lens focus position) of a lens and update the correction database 26 with the capture metadata 14 and the associated correction parameters 18 in order to process a captured image with the same capture metadata indicating the same capturing or optical conditions next time more quickly and efficiently).

279. A POSA would have been motivated to modify the camera system disclosed in Sarbadhikari and Katagiri in light of Iwasawa by adding (1) Iwasawa's multiplier 209 to a position between Sarbadhikari's A/D 16 and processor 22, or alternatively adding the shading correction functionality including Iwasawa's program for calculating and writing in Iwasawa's RAM the newly calculated

shading correction data to Sarbadhikari's processor 22 directly, and (2) Iwasawa's shading correction data corresponding to the user-adjustable capture parameters to Sarbadhikari's RAM instruction memory 31 and memory card 24 to perform shading correction for a captured image. This is because (1) Sarbadhikari, Katagiri and Iwasawa are analogous art to the '266 patent; (2) Iwasawa's shading correction capabilities including Iwasawa's program for calculating and writing in RAM the newly calculated shading correction data would be beneficial to the camera system as described in Sarbadhikari and Katagiri because image correction can be performed quickly and easily when an image is taken under the same capturing conditions; and (3) it was well-known in the art that a camera or an imaging system can perform various types of image corrections including the shading correction for a captured image as described in Iwasawa and other types of image corrections as described in Sarbadhikari and Katagiri. *Supra* § XII(A)

280. Such modification with conventional skills of implementing a processor for performing image corrections based on one or more of user-adjustable capture parameters corresponding to appropriate correction data stored in a memory would have been successful with reasonable expectation. *Supra* § XII(A).

281. Thus, claim 13 is obvious over Sarbadhikari, Katagiri and Iwasawa.

L. <u>Claim 14</u>

282. Claim 14 is obvious over Sarbadhikari, Katagiri and Iwasawa as explained below.

[14]: "The method of claim 1, further comprising changing a variable based on an auto-focus process performed by the camera and electronically storing that changed variable."

283. In the BACKGROUND OF THE INVENTION section, the '266 patent admits that the auto-focus technology is prior art in the early 1980s. EX1001, 1:60-63. The '266 patent explains that "[t]he AF system used an infrared light sensor to reflect light onto an object that allowed a camera's lens to focus on the object by employing a motor in the camera." *Id*., 1:65-67. Specifically, the '266 patent describes that "[i]n the last twenty-five years, an additional revolution has occurred with the advent of auto-focus (AF) technology in still photographic and video cameras." *Id.*, 1:60-64. "Invented by Minolta in the early 1980s, AF technology was a photographic application of technology developed for the U.S. military." *Id*. "AE was improved by Nikon, particularly with the use of a "3D color matrix" system, which included a library of pre-programmed image types." *Id*., 2:15-26. "The combination of the improved AF and AE subsystems allowed a dramatic simplification of photographic imaging because the photographer no longer labored over the time-consuming *focus* and the exposure *variables*. *Id*. Thus, a POSA reading the '266 patent would have understood that

the auto-focus technology is a conventional technique that automatically adjusts focus or focal point, which the ’266 patent characterizes as a “variable.” A POSA would have understood and found it obvious, given the ubiquity of AF technology as admitted by the ’266 patent, that the implementation of Sarbadhikari, Katagiri, and Iwasawa in a digital camera would have included an auto-focus process to automatically adjust, vary, or change focus or focal point.

284. As I discussed, Iwasawa teaches a camera that performs shading corrections using shading correction data stored in the /RAM 208 corresponding to the detected control signals indicating one or more of the user-adjustable aperture, zoom position, and lens type of the optical lens. *Supra* § XII(B). Iwasawa further discloses that its camera system has a CPU (206) which “has a program for calculating shading correction data in response to a control signal from the optical lens 201” and “[t]he shading correction…stores the shading correction date corresponding to one or more conditions of the aperture value, the zoom position, and the lens type of the optical lenses in the RAM 208[].” EX1005, [0019], [0020], Fig. 2. Iwasawa explains that the “shading correction data” corresponds to “one or more conditions of the aperture, the zoom position, and the lens type” and is stored in a “RAM 208, which is rewritable recording means.” *Id*. According to Iwasawa, “quick and accurate shading correction can be performed by performing shading correction by calculating shading correction data using the CPU 206 and

writing to rewritable recording means, for example, the RAM 208, reading out shading correction data in response to an imaging signal read out from the CCD 202, and multiplying the imaging signal by a digital signal that has undergone A/D conversion." *Id*., [0021]. Iwasawa also teaches that the aperture, zoom position and the lens type are changeable. EX1005, [0008], [0027] (emphasis added). Iwasawa further teaches that "the present invention can perform shading correction by selecting the type of shading correction data based on the control signal of the aperture value, the zoom position, and the lens type output from the optical lens 101, detecting the position of the screen using the address synchronized to the CCD drive pulse, and operating with the imaging signal using the multiplier 111, thereby making it possible to perform shading correction quickly, stably, and accurately without variation in the elements or change over time." EX1005, [0018].

285. A POSA reading Iwasawa would have understood that its camera system calculates correction data corresponding to one or more of the changeable or variable optical parameters (e.g., aperture, zoom position, lens type), stores the calculated correction data in a rewritable storage (e.g., RAM) and reads out appropriate shading correction data from the storage to perform shading correction in response to the detected control signal from the CCD indicating the characteristics of the lens represented by one or more of the optical parameters.

286. In addition to the'266 patent admitting that auto-focus technology automatically adjusting, varying, or changing focus (i.e., variable) is prior art, it was also well-known in the art that in-camera auto-focus process is better than manual focus adjustment in terms of ease of use, speed and accuracy. *See* EX1074, 1:8-2:21 (teaching an in-camera auto-focus mechanism that makes "moving objects may be photographed with relatively ease" because "[t]he manual dexterity requisite to converging optically upon a moving target is often beyond human ability"); EX1075, 1:23-55, 5:54-6:30, Fig. 2 (teaching an autofocus camera in which lens focus motor 60 and controller 40 perform autofocus within the camera and such autofocus system helps users adjust focus faster and easier "without looking through the viewfinder at all"). It was also well-known in the art that a digital camera performs image corrections for captured images based on correction data corresponding to individual focal point or focus automatically changed in an auto-focus process. *See* EX1018, [0058], [0060], [0084], [0090], [0101], [0109], [0110], [0158], [0177], Figs. 8 and 9 (teaching a camera with autofocus capabilities that performs shading corrections using "tag information" such as "camera name, a lens name, a focal length at the time of exposure, an f-number at the time of exposure, an exposure mode, a *focal point*…" to find appropriate correction table from a shading ROM 153)(emphasis added); EX1020, 1:7-10, 2:26-31; 3:48-64, 4:65-5:2, 7:56-64, 3:65-4:4, 5:10-24, 7:56-64, 11:34-46

(teaching an auto-focus process that can be performed by an in-camera AF motor and the camera that can perform aberration corrections based on aberration correction data corresponding to focus or focal point); EX1021, [0035], [0047], [0070], [0085], [0087], [0090], [0092] (teaching a digital camera with an auto focus mechanism that can perform aberration corrections based on correction values in accordance with focusing points and zoom positions stored in a database (e.g., tables or image recording apparatus).

287. A POSA would have been motivated to modify the camera of Sarbadhikari, Katagiri and Iwasawa by (1) including an auto-focus process, which was well-known in the art, to automatically change focus or focal point as a variable corresponding to the shading correction data as described in Iwasawa, (2) using Iwasawa's CPU to calculate new shading correction data based on newly detected control signal corresponding to individual focus or focal point, and (3) storing the detected focus or focal point corresponding to the newly calculated shading correction data. This is because (1) Sarbadhikari, Katagiri and Iwasawa are analogous art to the '266 patent; (2) the addition of an auto-focus process, which was well-known in the art, would make it faster and easier to properly adjust focus or focal point without the user's manual intervention especially because Sarbadhikari's camera is also designed for action photography (EX1004, 8:58-60), which a POSA would have understood is the photography of a fast-moving object,

and image correction can be performed faster and easier by reading out prestored variable associated with appropriate correction data when an image is taken under the same capturing conditions next time (s*upra* § XII(K)); and (3) it was well-known in the art (as recognized by the ’266 patent) that a camera or an imaging system can perform auto-focus process to automatically adjust, change, or vary focus or focal point and perform various types of image corrections including the shading correction corresponding to a focus or a focal point for a captured image as described in Iwasawa and other types of image corrections as described in Sarbadhikari and Katagiri. *Supra* § XII(A).

288. Such modification would have been successful with reasonable expectation because a POSA would have simply included a controller and a motor in the camera of Sarbadhikari, Katagiri and Iwasawa to automatically change focus or focal point of the camera, calculate image correction data corresponding to the changed focus or focal point, and store the changed focus or focal point associated with the image correction data in a memory. *Supra* § XII(A).

289. Thus, the combination of Sarbadhikari, Katagiri and Iwasawa renders claim 14 obvious.

M. <u>Claim 15</u>

290. Claim 15 is obvious over Sarbadhikari, Katagiri and Iwasawa explained below.

[15]: "The method of claim 1, further comprising changing a variable based on an auto-exposure process performed by the camera and electronically storing that changed variable."

291. The only different between claim 15 and claim 14 is that claim 15 replaces "auto-focus process" with "auto-exposure process."

292. The '266 patent admits that the auto-exposure (AE) technology is prior art. Specifically, the '266 patent describes in BACKGROUND OF THE CONVENTION that "[t]his AF technology was integrated with automatic exposure (AE) technology which developed complex algorithms in a "program" mode to combine shutter and aperture data to match each lens with particular subject matter, as well as an aperture-priority exposure mode and a shutter-priority exposure mode." EX1001, 2:3-8. "*AE was improved by Nikon*, particularly with the use of a "3D color matrix" system, which included a library of pre-programmed image types." *Id*., 2:15-21 (emphasis added). "The combination of the improved AF and AE subsystems allowed a dramatic simplification of photographic imaging because the photographer no longer labored over the time-consuming focus and the exposure variables." *Id*. "Of course, the photographer could use *manual focus* and *manual exposure* at any time, but these improvements increased the creative process and the competitive advantages of camera makers and photographers that employed them." *Id*., 2:8-12 (emphasis added). "In order to accomplish these complex processes, specific variables, such as aperture data,

shutter speed data, lens data, digital sensor data and subject type are registered and analyzed by the camera." *Id*., 24:4-9.

293. A POSA reading the '266 patent would have understood that the auto-exposure process is a conventional technique to automatically adjust exposure variables such as shutter and aperture data. *See also* EX1029, Abstract, 3:42-47 (teaching "[a]n automatic exposure controller for camera" and teaching that "shutter speed or a diaphragm aperture" is "required to achieve a proper exposure"); EX1024, Abstract; EX1054, 1:13-21 (teaching a camera with an automatic exposure mode which properly sets "aperture or shutter speed"); EX1022, [0021], [0022] (teaching a digital camera in which "[u]nder normal circumstances, the *CPU 1 sets the ISO speed in conformance to a photographer operation* and calculates an exposure value (an aperture value and a shutter speed) based upon the ISO speed"). And it was well-known in the art that that auto-exposure helps users adjust proper exposure parameters faster and easier than manual exposure adjustment. EX1076, [0009] (teaching a digital camera with an auto exposure process that "is a feature desired by many camera users, particularly those that are not photography experts, as automatic exposure control enables users to take photographs without having to manually adjust the lens aperture and shutter speed (exposure time)").

294. Sarbadhikari teaches a "*programmed* control processor 20 generally controls the input section A of the camera by initiating and controlling exposure (by operation of the diaphragm and shutter (not shown) in the exposure section 10)[.]" EX1004, 6:13-26 (emphasis added). "The control processor 20 would ordinarily include a microprocessor coupled with a system timing circuit." *Id*. A POSA would have understood that Sarbadhikari teaches or at least suggests an auto-exposure process because Sarbadhikari's exposure section 10 is controlled by a "programmed" control processor, and because Sarbadhikari's "enhancement files" can "control capture parameters such as exposure time." EX1004, 5:11-15.

295. As discussed, the combination of Sarbadhikari, Katagiri and Iwasawa render claim 3 (reciting "the user-adjustable variables include an aperture setting"), claim 5 (reciting "the user-adjustable variables include shutter speed settings) and claim 14 (reciting "electronically storing that changed variable") obvious. *Supra* § XII(C)(E) and (L). Thus, the combination of Sarbadhikari, Katagiri and Iwasawa teaches or at least suggests the additional limitation recited in claim 15.

296. A POSA would have been motivated to modify the camera of Sarbadhikari, Katagiri and Iwasawa by (1) including an auto-exposure process, which was well-known in the art and taught or at least suggested in Sarbadhikari, to automatically adjust exposure variables such as shutter speed or aperture settings, (2) using Iwasawa's teachings to calculate new shading correction data

corresponding to the exposure variable changed in the auto-exposure process, and (3) storing the detected exposure variable such as aperture corresponding to the newly calculated shading correction data. This is because (1) Sarbadhikari, Katagiri and Iwasawa are analogous art to the ’266 patent; (2) the addition of the auto-exposure process would make it more easier for a photographer to automatically adjust exposure variables without using manual exposure adjustment requiring personal expertise, and image correction can be performed easier and faster by reading out pre-stored exposure variable(s) associated with appropriate correction data when an image is taken under the same capturing conditions next time (s*upra* § XII(K)). *Supra* § XII(A). Indeed, Sarbadhikari already teaches “[o]ther electronic camera systems” that “*record* an image header along with the digital image data” and the header, for example, includes information indicating some characteristics about the image or the camera such as “exposure value” and “shutter speed.” EX1004, 1:32-40 (emphasis added). A POSA would have understood that Sarbadhikari at least suggests electronically storing changed exposure value (i.e., variable) associated with the image or the camera. Such modification would have been successful with reasonable expectation because a POSA would have simply used Sarbadhikari’s programmed control processor (20) to automatically adjust or control an exposure variable of Sarbadhikari’s camera, calculate image correction data corresponding to the adjusted exposure variable,

and store the changed exposure variable associated with the image correction data in a memory. *Supra* § XII(A). Thus, the combination of Sarbadhikari, Katagiri and Iwasawa renders claim 15 obvious. *Supra* § XII(C)(E) and (L).

N. <u>Claim 16</u>

297. Claim 16 is obvious over Sarbadhikari, Katagiri and Iwasawa as explained below.

[16]: "The method of claim 1, further comprising changing a variable based on a depth of field adjustment process performed by the camera and electronically storing that changed camera variable."

298. The only difference between claim 16 and claim 14 is that claim 16 replaces "auto-focus process" with "depth of field adjustment process."

299. Depth of field (DOF), as the '266 patent explains, is "dependent on the *aperture setting of the lens*[.]" EX1001, 13:38-40 (emphasis added). "One can narrow an image's surplus DOF range in-camera by manipulating the aperture." *Id*., 13:44-46. "[T]he present system allows in-camera depth-of-field (DOF) optimization by affecting the aperture of the lens that is used." *Id*., 13:33-37. The '266 patent further explains that "[t]he DOF manipulation thus depends on a combination of data sets including the particular lens used (wide-angle lenses have greater DOF at moderate distances than telephoto lenses), the distance information and the unique combinations of aperture and shutter speed." *Id*., 14:4-11. "DOF will narrow with less distance, with use of a telephoto lens and a fast aperture;

contrarily, DOF will expand with a further distance, with use of a wide-angle lens and a slower aperture." *Id*.

300. A POSA reading the '266 patent specification would have understood that the depth of field changes when the parameters or variables such as aperture settings and shutter speed change. It was also well-known in the art that a "depth of field adjustment process performed by a camera" recited in claim 16 is a process of adjusting or selecting the combination of aperture and shutter speed settings, of which at least one is a variable based on the depth of field adjustment process performed by the camera. EX1028, [0003] (teaching that "the depth of field can be changed by variously selecting the combinations of apertures and shutter speeds and, as a result, the blur effect of objects other than a principal object can be freely controlled"). It was also well-known in the art that a digital camera stores aperture information as a variable in a memory. EX1018, [0100], [0101], Fig. 8 (teaching a recording method performed by a digital camera where "f-number at the time of exposure" as "tag information" is stored in a memory).

301. As discussed, Sarbadhikari in combination with Katagiri and Iwasawa renders claim 3 (reciting "the user-adjustable variables include an aperture setting"), claim 5 (reciting the user-adjustable variables include shutter speed settings") and claim 14 (reciting "electronically storing that changed camera variable) obvious. *Supra* § XII(C)(E) and (L). Thus, the combination of

Sarbadhikari, Katagiri and Iwasawa teaches or at least suggests the additional limitation of claim 16.

302. Accordingly, claim 16 is obvious over Sarbadhikari, Katagiri and Iwasawa for the reasons given regarding claims 3, 5 and 14. *Supra* § XII(C)(E) and (L).

O. <u>Claim 17</u>

303. Claim 17 is obvious over Sarbadhikari, Katagiri and Iwasawa as explained below.

[17]: "The method of claim 14, further comprising digitally processing the at least one captured image using the in-camera software to correct at least one optical image aberration associated with an optical system and the changed camera variable."

304. Claim 17 depends on claim 14. The '266 patent does not explain what the claimed term "optical system" means. The '266 patent, however, explains that "[s]ince lenses of the same focal length but with different maximum apertures represent completely different lens designs, modifications of their aberrations will vary relative to each specific lens type." EX1001, 11:19-30. "For example, a 24 mm f/2.8 lens will have a different optical formula than a 24 mm f1.4 lens in a 35 mm camera system." *Id*. "Similarly, a 28 mm f/2.8 will differ from both a 28 mm f/2 lens and a 28 mm f1.4 lens and will thus each require different adjustments for vignetting, spherical aberration, pin cushion distortion, barrel distortion and coma." *Id*.

305. As discussed, Sarbadhikari discloses using in-camera software to process image corrections. *Supra* § XI(B)(2). As discussed, Iwasawa teaches a camera which performs shading correction for a captured image by detecting control signals indicating the user-adjustable or changeable variables such as aperture value, zoom position and lens type, reading out appropriate shading correction data corresponding to the detected aperture value, the zoom position, and the lens type from Iwasawa's RAM 208, and processing the shading correction. *Supra* § XII(B). A POSA reading Iwasawa would have understood that "shading" is a type of optical image aberration (the claimed "optical image aberration"). EX1005, [0004], [0005]. According to Iwasawa, "shading characteristics" may vary depending on the characteristics represented by user-adjustable optical parameters settings such as aperture value and zoom position (the claimed "changed camera variable") of individual lenses or cameras (the claimed "optical system"). *Supra* § XII(B)(C) and (D).

306. Thus, claim 17 is obvious over Sarbadhikari, Katagiri and Iwasawa for the reasons given regarding limitation [1A-1] of claim 1, claims 2-4 and 14. *Supra* §§ XI (B)(2) and XII(B)(C)(D) and (L).

P. <u>Claim 18</u>

307. Claim 18 is obvious over Sarbadhikari, Katagiri and Iwasawa as explained below.

[18]: "The method of claim 15, further comprising digitally processing the at least one image using the in-camera software to correct at least one optical image aberration associated with an optical system and the changed camera variable."

308. Claim 18 depends on claim 15. Claim 18 is obvious over Sarbadhikari, Katagiri and Iwasawa for the reasons given regarding claims 15 and 17. *Supra* § XII(M) and (O).

Q. <u>Claim 19</u>

309. Claim 19 is obvious over Sarbadhikari, Katagiri and Iwasawa as explained below.

[19]: "The method of claim 16, further comprising digitally processing the at least one image using the in-camera software to correct at least one optical image aberration and the changed camera variable."

310. Claim 19 depends on claim 16. Claim 16 depends on claim 1. Claim 19 is obvious over Sarbadhikari, Katagiri and Iwasawa for the reasons given regarding claims 16, 17 and 18. *Supra* § XII(N)(O) and (P).

R. <u>Claim 24</u>

311. Claim 24 is obvious over Sarbadhikari, Katagiri and Iwasawa as explained below.

[24]: "The method of claim 22, wherein the user-adjustable variables include aperture settings, lens data, shutter speed settings, and ISO settings."

312. Claim 24 depends on claim 22. Claim 24 recites the user-adjustable variables recited in claims 3-6. Claim 24 is obvious over Sarbadhikari, Katagiri

and Iwasawa for the reasons given regarding claims 3-6 and 22. *Supra* §§ XII(C)-(F) and XI(G).

S. <u>Claim 27</u>

313. Claim 27 is obvious over Sarbadhikari, Katagiri and Iwasawa as explained below.

[27]: "The method of claim 22, wherein the in-camera software processes image corrections based on one or more prior image corrections."

314. Claim 27 depends on claim 22. Claim 27 is obvious over Sarbadhikari, Katagiri and Iwasawa for the reasons given regarding claims 13 and 22. *Supra* §§ XII(K) and XI(G).

T. <u>Claim 30</u>

315. Claim 30 is obvious over Sarbadhikari, Katagiri and Iwasawa as explained below.

[30]: "The method of claim 1; further comprising: digitally processing a plurality of images to correct video taken by the digital camera; and storing a plurality of corrected images."

316. Claim 30 depends on claim 1. As discussed, Sarbadhikari teaches "storing in memory one or more corrected images resulting from digitally processing the at least one captured image." *Supra* § XI(B)(7). Sarbadhikari does not expressly teach processing images to correct "video" taken by a digital camera, which is disclosed by Iwasawa.

317. For example, Iwasawa teaches that it relates to an image input device having an optical system lens such as an *electronic still camera* or a *video camera*. EX1005, [0002] (emphasis added). Iwasawa also explains and illustrates in Figure 2 that the output signal from the digital signal processor 211 is a "*video signal*." *Id*., [0021] (emphasis added).

318. Claim 30 further recites "digitally processing a plurality of images to correct video…storing a plurality of corrected images." Although Iwasawa does not expressly teach this limitation, it was well-known in the art that Iwasawa's video data is constructed by a plurality of still images stored in a fame memory on a frame-by-frame basis. *See* EX1008, [0006], [0038], [0039], [0047], [0052], [0058], [0061], [0062], [0071], [0072], Fig. 1 (teaching a camera that performs video image corrections and stores the corrected video image as a plurality of frame images in a storage unit on a frame-by-frame basis); EX1019, 9:65-10:13, 10:29-40, (teaching a "digital video camera" that can process image correction and store the corrected image data on a frame-by-frame basis). Indeed, this is also recognized by the '266 patent. EX1001, 27:25-39 (teaching that video can be viewed as "merely a very rapid (30 to 60 frames per second) application of still photography").

319. A POSA would have been motivated modify the type of camera system described in Sarbadhikari and Katagiri in light of Iwasawa's camera system

by (1) adding Iwasawa's multiplier 209 to a position between Sarbadhikari's A/D 16 and processor 22, or alternatively adding the shading correction functionality to Sarbadhikari's processor 22 directly, (2) adding Iwasawa's shading correction data corresponding to the user-adjustable capturing parameters pre-stored in RAM to Sarbadhikari's RAM instruction memory 31 and memory card 24 to perform shading correction for a plurality of frame images of video, and (3) storing the plurality of corrected frame images in Sarbadhikari's memory card 24. This is because (1) Sarbadhikari, Katagiri and Iwasawa are analogous art to the '266 patent; (2) Iwasawa's shading correction would be beneficial to the camera system as described in Sarbadhikari and Katagiri specially because Sarbadhikari also teaches an image buffer (18) for storing a plurality of frame images (still images) as illustrated in Figure 2 (*see also* EX1004, 6:11-14, 27-40); and (3) it was well-known in the art that a camera or an imaging system can perform various types of image corrections including the shading correction for a plurality of captured frame images of video as described in Iwasawa and other types of image corrections as described in Sarbadhikari and Katagiri. *Supra* § XII(A).

320. Indeed, Iwasawa expressly teaches that its camera system applies to not only electronic video camera, but also electronic still camera (EX1005, [0001]), which is the type of camera as described in Sarbadhikari. EX1004, 2:66-3:2 (teaching that "the invention provides an electronic still photography system

which...can be used with an electronic still camera”). There is nothing dissuading a POSA from modifying Sarbadhikari’s electronic still camera in light of Iwasawa’s teachings that apply to both electronic still camera and video camera.

321. As recognized by the ’266 patent that video can be viewed as “merely a very rapid (30 to 60 frames per second) application of still photography”)(EX1001, 27:25-39), such modification with conventional skills of implementing a camera with a processor capable of displaying 30 to 60 frame images per second to perform image corrections for a plurality of captured frame images based on a user-adjustable capture parameters corresponding to appropriate correction data stored in a memory and storing the plurality of the corrected frame images in a memory would have been successful with reasonable expectation. *Supra* § XII(A).

322. Thus, claim 30 is obvious over Sarbadhikari, Katagiri and Iwasawa.

XIII. GROUND 3: CLAIMS 8, 13 AND 27 WOULD HAVE BEEN OBVIOUS IN LIGHT OF SARBADHIKARI, KATAGIRI AND GINDELE

A. Motivation to Combine

323. A POSA would have been motivated to combine the disclosures of Sarbadhikari, Katagiri and Gindele in a way that would yield the alleged invention claimed in the ’266 patent, and a POSA reasonably would have expected success in doing so.

324. As discussed, both Sarbadhikari and Katagiri are analogous art to the ’266 patent. *Supra* § XI(A). Similarly, Gindele also teaches a digital camera that can perform image corrections such as color, brightness and tonal scale enhancements for images captured by a lens and an image sensor. *See* EX1056, [0002], [0006], [0044] (teaching that “the present invention can be implemented within the hardware and software of a digital camera such that the digital images produced by the digital camera have been processed with the present invention prior to being exported by the digital camera”), [0045], [0055], [0056], [0060], [0078], Figs. 1-2, 3a and 4. The ’266 patent also teaches a digital camera performing tonal range corrections. EX1001, 14:49-56, 14:27-48, 14:60-67, 15:12-17. Thus, Gindele is also in the same field of endeavor as the ’266 patent and pertinent to the problem the ’266 patent sought to solve. Moreover, Sarbadhikari, Katagiri, Gindele and the ’266 patent all list the H04N subclass under the International Classification.

325. A POSA would have understood from Gindele’s teachings that it would be beneficial to the type of camera as described in Sarbadhikari and Katagiri by adding Gindele’s tonal range (i.e., dynamic range) correction capabilities to the type of camera described in Sarbadhikari and Katagiri. Sarbadhikari teaches “dynamic range optimization algorithms” and “dynamic range optimization tables” that are included in Sarbadhikari’s enhancement files and that are used to affect or

modify the dynamic range of captured images. EX1004, 4:57-5:1, 6:53-59. Gindele teaches that its "tone scale functions" are "designed to reduce the image *dynamic range*." EX1056, [0006] (emphasis added). According to Gindele, "[t]he inclusion of the tone scale module 330 enhances the appearance of the processed digital images such that digital images that deviate from the norm, in terms of *dynamic range*, will be *tonally enhanced* and digital images that are at the norm for the system will be unaltered by the tone scale module 330." *Id*., [0060]. Thus, a POSA reading Gindele would have understood that its tonal enhancements based on a series of cascaded modules including the RLSE conversion module (310), the scene balance module (320) and the tonal scale module (330) would be beneficial to Sarbadhikari's camera system, which is also designed to achieve "dynamic range optimization" using "dynamic range optimization tables."

326. A POSA would have been motivated to modify the camera system as described in Sarbadhikari and Katagiri in light of Gindele by adding Gindele's cascaded modules (310-340) incorporated in the digital image processor (20) including the RLSE conversion module (310), the scene balance module (320) and the tonal scale module (330) used for tonal enhancements.

327. As discussed, Sarbadhikari is designed to enhance the dynamic range of a captured picture. Gindele also teaches that its "tone scale functions" reduce the image *dynamic range*." This would have motivated a POSA to consider

Gindele's tonal enhancements to further improve or enhance Sarbadhikari's dynamic range optimization capabilities.

328. In addition, Gindele teaches that "[t]his invention relates to digital image processing and in particular to processing a digital image to enhance its color, brightness, and tone scale characteristics." EX1056, [0002]. In particular, Gindele teaches that "[b]y practicing the present invention, the color characteristics of the digital image are significantly enhanced when also applying a tone scale function." *Id*., [0017]. Sarbadhikari's enhancement files also include algorithms such as "color interpolation, color balance, and correction algorithms" and "color reproduction algorithms" used to improve or enhance the color characteristics of a captured image. EX1004, 4:63-66; 8:32-36. Thus, Gindele's teachings to enhance "color characteristics" of a captured image would also have motivated a POSA to use Gindele's cascaded modules including the RLSE conversion module (310), the scene balance module (320) and the tonal scale module (330) to further improve or enhance Sarbadhikari's color correction or reproduction capabilities. Indeed, both Sarbadhikari and Gindele have the same assignee, i.e., Eastman Kodak Company. Moreover, Sarbadhikari, Katagiri, Gindele and the '266 patent all list the H04N subclass under the International Classification.

329. A POSA would have had a reasonable expectation of success in modifying the camera system as described in Sarbadhikari and Katagiri in light of

Gindele with straightforward and routine in the art, requiring only conventional skills. This is because a POSA would have simply used Sarbadhikari's processor (20) to execute Gindele's software program which implements the cascaded image processing modules in the digital image processor (20) (shown in Figure 2 of Gindele at EX1056) including the "RLSE conversion module (310)," the "scene balance module (320) and the "tone scale function module (330), which are modules or components of and processed by a digital signal processor (20) as described in Gindele to process image corrections in one module (e.g., tone scale module (330) based on prior image corrections in prior module(s) (e.g., scene balance module). EX1056, [0045]. A POSA would also have simply used Sarbadhikari's memory card (24) and/or the RAM instruction memory (31) to store Gindele's "values and control parameters used to control and adjust tone scales that are stored in LUT (look-up-table)." In addition, Sarbadhikari's user input section (A) together with the operation display (30) would have easily performed operation in response to user input selections 231 in the generation of the tone scale function 203 as taught in Gindele.

B. <u>Claim 8</u>

330. Claim 8 is obvious over Sarbadhikari, Katagiri and Gindele as explained below.

[8]: "The method of claim 2, wherein the user-adjustable variables include tonal range corrections."

331. As explained by the '266 patent, "the tonal range of an image data set is enhanced in-camera by using meta-data to sample the range of shadow and highlight detail." EX1001, 14:49-56 (emphasis added). "The data sets are interpolated to add requested shadow detail and/or highlight detail." *Id*. "Obviously, some subjects require more or less shadow or highlight (or both), which the camera can correspondingly adjust." *Id*. (emphasis added). "These tonal range corrections are user-adjustable." *Id*.

332. The '266 patent further explains that "[w]hile they do not have the low noise ratio of the CCD, they do have greater light exposure latitude, in both range of ISO and *dynamic range of detail in highlight and shadow*." *Id*., 5:47-50 (emphasis added). "Once the camera detects specific conditions, such as a broad range of exposure latitude, from very bright to very dark, in the scene, it computes the precise number and location of nano-grids needed to *modulate the pixels for optimum exposure with highlight and shadow detail* and extreme sharpness, even in relatively low light." *Id*., 21:20-25 (emphasis added).

333. A POSA reading the '266 patent would have understood that the "tonal range," which has the same meaning of "dynamic range," refers to the range of levels between the darkest (shadow) and lightest (highlight) pixels in an image

and that the "toner range correction" means adjustment or variation of the range of levels between the darkest (shadow) and lightest (highlight) pixels.

334. Gindele teaches user-adjustable "tonal range corrections" to process image corrections for captured images.

335. First, Gindele discloses and illustrates in Figure 1 image capture devices including image capture device 10b (e.g., digital camera) and an image processor 20 "for processing digital images to produce pleasing looking images on an intended output device or media." EX1056, [0044], Fig. 1.

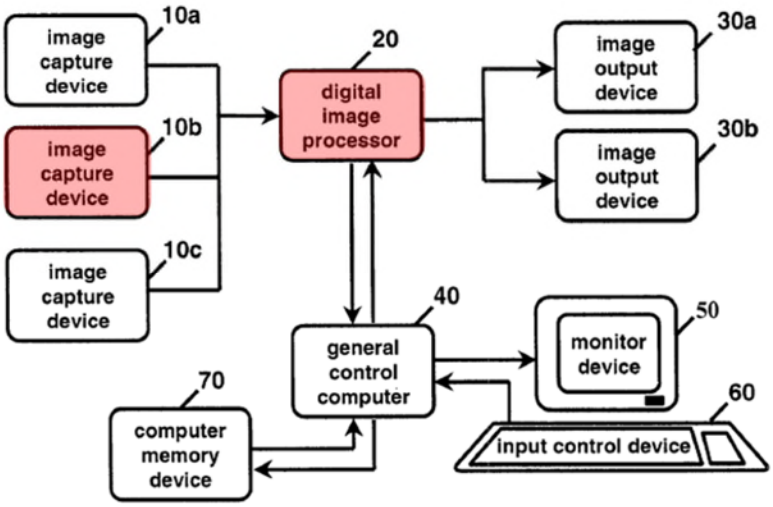

Fig. 1

EX1056, Fig. 1

336. Gindele explains that "[i]t should also be noted that the present invention can be implemented within the hardware and software of a digital camera such that the digital images produced by the digital camera have been

processed with the present invention prior to being exported by the digital camera." *Id*., [0044]. A POSA reading Gindele would have understood that the digital image processor (20) can be an in-camera component to carry out the image processing within a digital camera using the hardware and software of the camera.

337. Second, Gindele goes on to explains and illustrates in Figure 2 that the digital image processor (20) has four cascaded image processing modules including a "tone scale module 330." *Id*., [0045]. "[The] tone scale module 330 receives the source digital image, generates a tone scale function from the source digital image and applies the tone scale function to the source digital image resulting in an enhanced digital image." *Id*., Fig. 2.

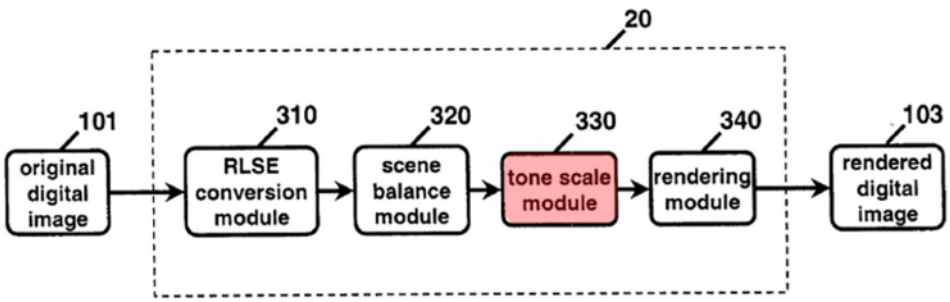

Fig. 2

EX1056, Fig. 2

338. Gindele explains that the tone scale function is designed to reduce the numerical range of pixel values." *Id*., [0004]. According to Gindele, a digitally processed image by a tone scale function has more spatial detail and appears more

natural. *Id*. Gindele further states that a tone scale function can "reduce the image *dynamic range*." *Id*., [0006] (emphasis added).

339. In addition to a general overview of toner scale function, Gindele specifically teaches a "tone scale module 330" in the digital image processor 20 that can "enhance[] the appearance of the processed digital images such that digital images that deviate from the norm, in terms of *dynamic range*, will be tonally enhanced and digital images that are at the norm for the system will be unaltered by the tone scale module 330." *Id*., [0060] (emphasis added). As an example, Gindele explains and illustrate in Figure 3a how the tone scale module 330 changes pixel values (i.e., toner range correction) prepared by the rendering module 340 which is responsible for preparing the final processed image for an image output device. *Id*., [0055], [0056], Fig. 3a.

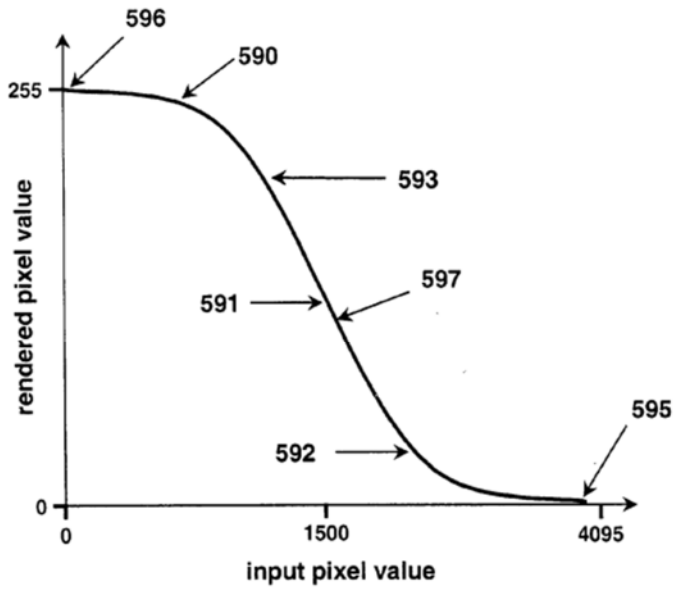

Fig. 3a

EX1056, Fig. 3a

340. With reference to Fig. 3a, Gindele specifically explains that Point 591 corresponds to an input pixel value equal to the reference gray point; Point 592 indicates the rendering function response for a *highlight pixel value corresponding to a light region* in the original digital image 101; Point 593 indicates the rendering function response for *a shadow pixel value corresponding to a dark region* in the original digital image 101; Point 595 indicates the rendering function response corresponding to *brightest reproduced output value* of the output image device; point 596 indicates the rendering function response corresponding to *darkest reproduced output value* of the output image device; and Point 597 indicates the point on the rendering function for which the instantaneous slope has a maximum

magnitude which does not necessarily coincide with the reference gray point 591. *Id*., [0056] (emphasis added).

341. Finally, Gindele teaches that the tonal range corrections are user-adjustable variables. Specifically, Gindele discloses and illustrates in Figure 4 that "[t]he tone scale function generator 230 can be used in either an automatic mode, wherein the tone scale function 203 is calculated using the pixels of the analysis digital image 201, *or in a manual mode, wherein the tone scale function 203 is calculated using user input selections 231 provided via a graphical user interface*." *Id*., [0078] (emphasis added), Fig. 4.

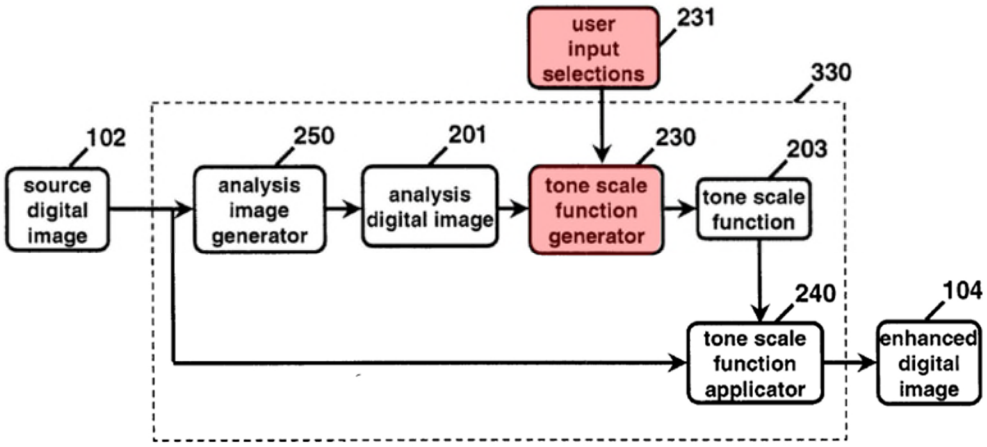

Fig. 4

EX1056, Fig. 4

342. With reference to Figure 4, Gindele explains that "the tone scale function generator 230 can accept user input selections 231 in the generation of the

tone scale function 203." *Id*., [0138]. "For example a user of the system shown in FIG. 1 can view possible selections and/or control parameters on the monitor device 50 and indicate selections using the input control device 60 such as a keyboard or mouse pointing device." *Id*. "When used in this manual user mode, a highlight control parameter and a shadow control parameter are used to change the shape of the component functions that are used to generate the highlight tone scale segment and shadow tone scale segment respectively." *Id*. Gindele also teaches that the values and control parameters used to control and adjust tone scales are stored in "LUT (look-up-table) for later recall." *Id*., [0046], [0093], [0124], [0128].

343. A POSA would have understood that Gindele's digital camera with the tone scale function module (203), the toner scale function generator (230) and the user input selection (231) in the manual user mode with the values and control parameter stored in the look-up-table can process image corrections using user-adjustable tonal corrections.

344. A POSA would have been motivated to modify the camera type as described in Sarbadhikari and Katagiri in light of Gindele and such modification would have been made with reasonable expectation of success. *Supra* § XIII(A).

C. <u>Claim 13</u>

345. Claim 13 is obvious over Sarbadhikari, Katagiri and Gindele as explained below.

[13]: "The method of claim 1, wherein the in-camera software processes image corrections based on one or more prior image corrections."

346. Gindele teaches and illustrates in Figure 2 a series of "cascaded image processing modules" that represent a "digital image processing path." EX1056, [0045], Fig. 2.

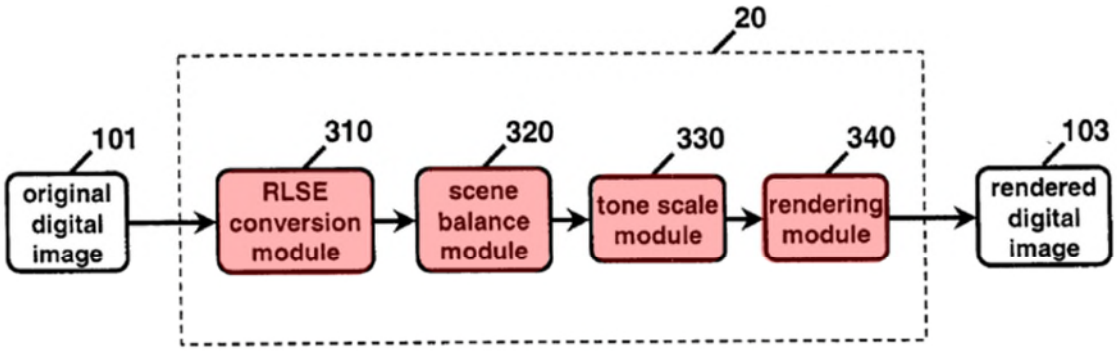

Fig. 2

EX1056, Fig. 2

347. First, as shown in Figure 2 and explained in Gindele, "[a] RLSE (relative log scene exposure) conversion module 310 receives the original digital image 101 and generates an RLSE digital image that is prepared for balancing and the application of a tone scale function." *Id*.

348. Second, "[a] scene balance module 320 receives the RLSE digital image and performs a lightness and color balance adjustment resulting in a source digital image." *Id*., [0045].

349. Third, "[a] tone scale module 330 receives the source digital image, generates a tone scale function from the source digital image and applies the tone scale function to the source digital image resulting in an enhanced digital image." *Id*. According to Gindele, "[t]he inclusion of the tone scale module 330 enhances the appearance of the processed digital images such that digital images that deviate from the norm, in terms of dynamic range, will be tonally enhanced and digital images that are at the norm for the system will be unaltered by the tone scale module 330." *Id*., [0060].

350. Fourth, "[a] rendering module 340 processes the enhanced digital image such that the pixel values of the generated rendered digital image 103 have been prepared to yield a pleasing result when used in conjunction with an output image device such as a digital printer." *Id*. According to Gindele, "[t]he rendering module 340 performs a color transformation, a tonal rendering transformation, and an output encoding transformation." *Id*., [0052].

351. Finally, Gindele explains that "the present invention will be described as a software program." *Id*., [0039]. "Those skilled in the art will readily

recognize that the equivalent of such software may also be constructed in hardware." *Id*.

352. A POSA would have understood that Gindele uses in-camera software to process the cascaded modules (310-340), in which one image correction is performed in one module (e.g., tone scale module (330) based on prior image corrections in prior module(s) (e.g., scene balance module).

353. A POSA would have been motivated to modify the camera type as described in Sarbadhikari and Katagiri in light of Gindele and such modification would have been made with reasonable expectation of success. *Supra* § XIII(A).

D. Claim 27

354. Claim 27 is obvious over Sarbadhikari, Katagiri and Gindele, as explained below.

[27]: "The method of claim 22, wherein the in-camera software processes image corrections based on one or more prior image corrections."

355. Claim 27 depends on claim 22. Claim 27 is obvious over Sarbadhikari, Katagiri and Gindele for the reasons given regarding claims 13 and 22. *Supra* §§ XIII (C) and XI(G).

XIV. GROUND 4: CLAIMS 11-12 AND 25-26 WOULD HAVE BEEN OBVIOUS IN LIGHT OF SARBADHIKARI, KATAGIRI AND YAMASAKI

356. Claims 11-12 and 25-26 are obvious over Sarbadhikari, Katagiri and Yamasaki.

A. <u>Motivation to Combine</u>

357. A POSA would have been motivated to combine the disclosures of Sarbadhikari, Katagiri and Yamasaki in a way that would yield the alleged invention claimed in the ’266 patent, and a POSA reasonably would have expected success in doing so.

358. As discussed, both Sarbadhikari and Katagiri are analogous art to the ’266 patent. *Supra* § XI(A). Similarly, Yamasaki also teaches a digital camera that can perform image corrections for images captured by a lens and an image sensor by digitally separating a principal object from background in a captured image and digitally manipulating the aperture of the background portion to achieve a special effect such as blurring the background portion. *See e.g.*, EX1028, [0007], [0033], [0052]-[0053], [0068], [0076], [0085], [0102], [0106]-[0107], [0110]-[0111], [0115], [0116], Figs. 1, 16-18. This is also the problem that the ’266 patent sought to solve. EX1001, 13:38-42, 13:44-49, 16:5-36, 33:2-5. Thus, Yamasaki is also analogous art to the ’266 patent. Moreover, Sarbadhikari, Katagiri, Yamasaki and the ’266 patent all list the H04N subclass under the International Classification.

359. A POSA would have understood that Yamasaki would be beneficial to the camera of Sarbadhikari and Katagiri to include Yamasaki’s capabilities of adjusting depth of field of a portion (e.g., background) of a captured image by

digitally manipulating aperture (i.e., depth of field) of a specifical portion (e.g., background) of the image in the camera of Sarbadhikari and Katagiri.

360. Sarbadhikari teaches user-adjustable capture parameters such as aperture setting. EX1004, 5:62-65, 7:16-22, 6:13-18, 7:44-50, 6:13-18, Fig. 2. According to Sarbadhikari, "[e]nhancement files can be included which control capture parameters such as exposure time, *aperture setting*" and "[a] particular set of control parameters can be used to tailor the capture parameters to the *type of scene or subject* being captured." *Id*., 5:13-17 (emphasis added). A POSA reading Sarbadhikari and would have understood that aperture (i.e., DOE) adjustment is important to a specific type of scene or subject being captured.

361. Yamasaki teaches a problem in a low-end camera (i.e., compact camera) which cannot take an image with a blur effect because of its smaller the aperture size. EX1028, [0004]. To overcome the problem, Yamasaki discloses a digital camera that can differentiate aperture (i.e., depth of field) by digitally separating a principal object from background in a captured image and digitally manipulating the aperture of the background portion to achieve a special effect such as blurring the background portion. *Id*., [0053], [0068], [0076], [0085], [0102], [0115]. As a result, according to Yamasaki, a high-quality image with a natural blur effect can obtained. *Id*., [0103].

362. Thus, a POSA reading Sarbadhikari and Yamasaki would have understood that Yamasaki's teachings would be beneficial to the camera system as described in Sarbadhikari and Katagiri to enhance the captured image for a specific type of scene or subject by digitally adding blur effect to a portion of the captured image.

363. A POSA would have been motivated to modify Sarbadhikari in light of Yamasaki by adding Yamasaki's teachings of manipulating aperture (i.e., DOE) of a portion of a captured image to Sarbadhikari's camera system.

364. First, the '266 patent teaches that adjusting DOF by digitally manipulating aperture achieves a "*special effect (such as a soft effect only on a specific object rather than the scene as a whole)*[.]" EX1001, 16:18-25 (emphasis added). The '266 patent also teaches that optimizing aperture or DOF is particularly useful for a *type of subject such as a portrait*. *Id*., 13:59-14:3 (emphasis added). Such special effect that the 266 patent is designed to obtain in a specific type of subject such as a portrait is nothing more than what is exactly taught in Sarbadhikari.

365. Specifically, Sarbadhikari teaches that its "non-image files, which cause processing of the captured image data, may process the captured image data such that the most 'true-to-scene' reproduction is achieved, or instead provide *special effects* of the kind which change the image into some desired alteration of

the original scene." EX1004, 5:5-10. As one example, Sarbadhikari teaches that its "non-image files" include enhancements for "special set-up for *portraiture*" and "*special effects*." *Id*., 7:38-43 (emphasis added). With respect to "portraits" as an example of the specific subject being captured, Sarbadhikari expressly teaches that "an appropriate set of parameters" is used to enhance image effects such as "skin tones" and "edge sharpness" (*id*., 8:61-9:1) and a "special processing" used to "*soften the image* and reduce noise which might appear as facial blemishes: when taking "*portraits*." *Id*., 10:16-22 (emphasis added).

366. In recognition of Sarbadhikari teaching that control parameters such as aperture is used to tailor to a specific subject such as portraits requiring optimization of softness and sharpness to achieve special effect, and the teachings of Yamasaki to differentiate aperture (i.e., depth of field) by digitally separating a principal object from background in a captured image and digitally manipulating the aperture of the background portion to achieve a special effect such as blurring the background portion, a POSA would have been motivated to modify Sarbadhikari's camera system in light of Yamasaki to including Yamasaki's teachings to achieve Sarbadhikari's objectives.

367. It was also well-known in the art to digitally manipulate aperture of a specific portion of a captured image to achieve a special effect (e.g., the background portion of an image). *See* EX1057, [0063], [0073], [0076], [0077],

[0084], [0094] Figs. 1, 4 (teaching a digital camera in which "a [digital]filtering unit 116 …processes the image data so that a background of the image appears blurred (defocused)" and "CPU 101 controls the filtering unit 116 to perform a process for blurring the background of the image."); EX1058, 1:62-65, 3:20-5:11, Figs. 1, 8, 11A-11C, (teaching that in the image processing field, "filtering is often adopted in which the background is blurred using a high-pass filter, and the object image is sharpened using a low-pass filter," and teaching a digital camera that can apply "a blur effect corresponding to a preset in-focus state to a captured image").

368. A POSA would have had a reasonable expectation of success in modifying the camera system as described in Sarbadhikari and Katagiri in light of Yamasaki with straightforward and routine in the art, requiring only conventional skills because a POSA would have simply used Sarbadhikari's processor (20) to execute Yamasaki's separation and blurring processes and Sarbadhikari's RAM instruction memory (31) and/or memory card (24) to store Yamasaki's operation programs and filter matrices for Sarbadhikari's processor (20) to execute Yamasaki's separation and blurring processes.

B. <u>Claim 11</u>

369. Claim 11 is obvious over Sarbadhikari, Katagiri and Yamasaki as explained below.

[11]: "The method of claim 1, wherein the digitally processing the at least one captured image for image correction further comprises adjusting a depth of field of an image."

370. The '266 patent explains that "DOF in an image is dependent on the aperture setting in a lens, in which a moderate DOF range—allowing a subject to be isolated in an image—can be manipulated, that is, extended or narrowed, by the camera's digital processing capability." EX1001, 13:38-42. This is because, according to the '266 patent, "once the digital file is sent to post-production editing, the aperture and DOF is already set and incapable of being changed." *Id*., 13:44-49. A POSA reading the '266 patent would have understood that once an image is taken and sent to the camera for digital processing, the aperture and DOF cannot be optically changed. Rather, they can only be "manipulated" digitally within the camera. To manipulate the aperture and DOF in order to obtain a desired image, the '266 gives an example that it can "isolate a specific object by focusing on the object within a range of DOF" so that a specific filtration preference can be selectively applied to the "object" or the "background." *Id*., 16:5-36. According to the '266 patent, "[m]odulating aperture automatically in the camera provides a blurring of the background and the foreground so that the object can stand out without distraction." *Id*., 33:2-5.

371. In addition to Sarbadhikari teaching a camera that can perform adjusting shutter speed and aperture value (i.e., depth of field), Yamasaki teaches a

digital camera that can adjust a depth of field of an image by digitally manipulating aperture after the image is captured.

372. Yamasaki teaches a problem that a low-end compact camera cannot take an image with a blur effect because of its small aperture size, which can be taken by a camera with a lens of a large aperture size. EX1028, [0003], [0004]. Yamasaki's one objective is to provide a compact camera that can generate an image with a blur effect as if it were taken by a lens with a large aperture size from a captured image taken by the lens with a small aperture size. *Id*., Abstract, [0006]. To that end, Yamasaki teaches a camera that can digitally process an image optically captured by a lens by digitally separating the principal object from the background in the captured image and applying a blur filter process to the background portion of the captured image. *Id*., [0053], [0068], [0076], [0085], [0102], [0115]. As a result, according to Yamasaki, a high- quality image with a natural blur effect can be obtained. *Id*., [0103].

373. As an example, Yamasaki explains and illustrates in Figure 1 a process of separating the principal object from the background in a plurality of captured images and applying a "blur image process" to the background portion. EX1028, [0052]-[0053], Fig. 1.

FIG. 1

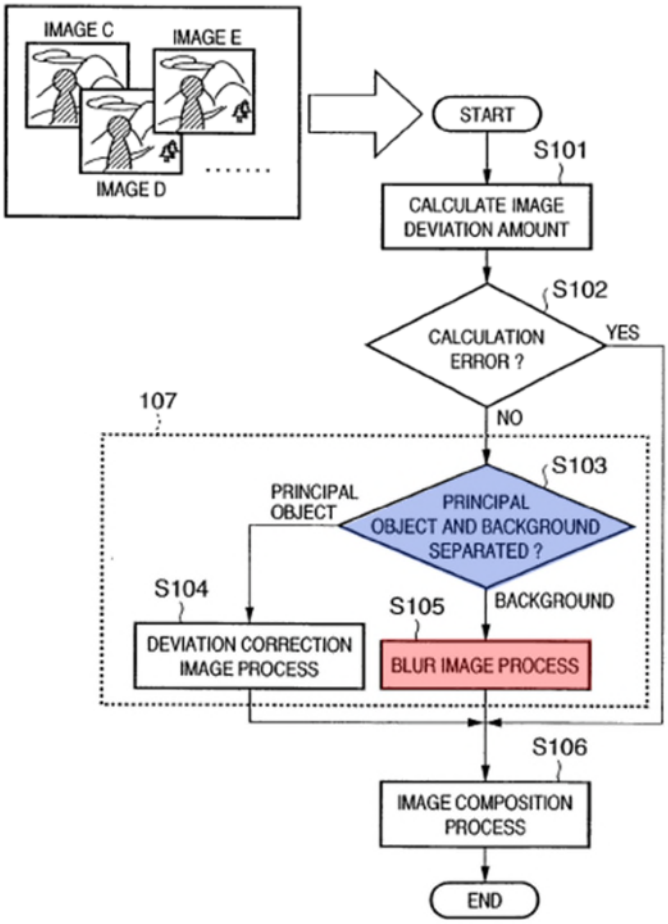

EX1028, Fig. 1

374. The blur effect is added by convolving 9x9 blur filter matrices to the image data of the background portion. *Id*., [0095]-[0097], [0114]-[0115]. Yamasaki explains that "[t]hese matrices are calculated in advance on the basis of the point spread function of the image sensing lens." *Id*., [0095]. "For example, assuming that the f-number of the image sensing optical system is F5.6, the matrix in FIG. 14A corresponds to F2.8, the matrix in FIG. 14B corresponds to F4.0, and these matrices can add the blur effects that cannot be realized by the image sensing

optical system." *Id*. As a result, according to Yamasaki, "an image with a blur effect like that sensed by an image sensing lens with a large aperture size can be obtained from a plurality of parallax images sensed by an image sensing unit having an image sensing lens with a small aperture size." *Id*., [0127]. Yamasaki further teaches that there are "two different filter matrices" that a "photographer can selectively use them according to his or her favor." *Id*., [0098]. Yamasaki further discloses storing this program in ROM 407 of the central controller 404, which is connected to digital signal processor 403. *Id*., [0047], [0109]-[0111], Fig. 17.

375. A POSA reading Yamasaki would have understood that it teaches a digital camera that uses an in-camera software program (as an in-camera software stored in ROM of the central controller as an in-camera hardware) to adjust a depth of field of a captured image by digitally separating a specific portion (e.g., background) from another specific portion (e.g., principal object) and manipulating aperture (i.e., depth of field) of the separated portion by applying digital blur filtration so that a higher quality image with a natural blur effect can be obtained.

376. A POSA would have been motivated to modify the camera type as described in Sarbadhikari and Katagiri in light of Yamasaki and such modification would have been made with reasonable expectation of success. *Supra* § XIV(A).

C. Claim 12

377. Claim 12 is obvious over Sarbadhikari, Katagiri and Yamasaki as explained below.

[12]: "The method of claim 1, further comprising adjusting a depth of field of an image after capture of the image using the in-camera software."

378. Claim 12 recites "adjusting a depth of field of an image *after* capture of the image *using the in-camera software*." Claim 12 is obvious over Sarbadhikari, Katagiri and Yamasaki for the reasons given regarding claim 1 and claim 11. *Supra* §§ XI(B) and XIV(B).

D. Claim 25

379. Claim 25 is obvious over Sarbadhikari, Katagiri and Yamasaki as explained below.

[25]: "The method of claim 22, wherein the digitally processing the at least one captured image for image correction further comprises adjusting a depth of field of an image."

380. Claim 25 depends on claim 22. Claim 25 is obvious over Sarbadhikari, Katagiri and Yamasaki for the reasons given regarding claims 11 and 22. *Supra* §§ XI(G) and XIV(B).

E. Claim 26

381. Claim 26 is obvious over Sarbadhikari, Katagiri and Yamasaki as explained below.

[26]: "The method of claim 22, further comprising adjusting a depth of field of an image after capture of the image using the in-camera software."

382. Claim 26 depend on claim 22. Claim 26 is obvious over Sarbadhikari, Katagiri and Yamasaki for the reasons given regarding claims 11, 12 and 22. *Supra* §§ XI(G) and XIV(B)(C).

XV. GROUND 5: CLAIM 21 WOULD HAVE BEEN OBVIOUS IN LIGHT OF SARBADHIKARI, KATAGIRI AND ITO

383. Claim 21 is obvious over Sarbadhikari, Katagiri and Ito.

A. Motivation to Combine

384. A POSA would have been motivated to combine the disclosures of Sarbadhikari, Katagiri and Ito in a way that would yield the alleged invention claimed in the '266 patent, and a POSA reasonably would have expected success in doing so.

385. As discussed, both Sarbadhikari and Katagiri are analogous art to the '266 patent. *Supra* § XI(A). Similarly, Ito also teaches a digital camera that can perform image corrections for images captured by a lens and an image sensor by applying a fast Fourier transform to enhance sharpness of captured images. EX1038, [0002], [0003], [0007]-[0010], [0014], [0015], [0017], [0020]. This is the same problem that the '266 patent sought to solve. EX1001, 31:50-56. Thus, Ito is also analogous art to the '266 patent. Moreover, Sarbadhikari, Katagiri, Ito and the '266 patent all list the H04N subclass under the International Classification.

386. A POSA would have understood from Ito's teachings that it would be beneficial to add Ito's fast Fourier transform to the type of camera described in Sarbadhikari and Katagiri. Ito teaches a problem called "chromatic aberration" due to optical wavelength of an optical lens. EX1028, [0002]. Ito explains that chromatic aberration causes loss of sharpness in an image and image coloring. *Id*., [0003]. A POSA would have understood that Sarbadhikari's camera system would have had the same problem of "chromatic aberration" due to the lens type. Thus, a POSA would have understood that Ito's chromatic aberration correction capability using a fast Fourier transform would be beneficial to the camera type described in Sarbadhikari.

387. As Sarbadhikari's memory card 24 includes various image correction algorithms such as color filter array interpolation algorithms, noise reduction algorithms, edge sharpening algorithms, color reproduction algorithms, or dynamic range optimization algorithms (EX1004, 4:57-5:1) relating to sharpness and color optimization in images, a POSA would have been motivated to modify the camera as described in Sarbadhikari by adding Ito's fast Fourier transform to Sarbadhikari's camera system to solve the "chromatic aberration" problem, thereby enhancing color and sharpness of the captured images.

388. Indeed, Patent Owner admitted during prosecution of U.S. Pat. No. 8,451,339 (the "'339 patent) of which the '266 patent is a continuation that using a

fast Fourier transformation as an algorithm in digital image processing was well-known in the art and there is no reason not to include a fast Fourier transformation to the toolbox in order to solve the aberration. Specifically, during prosecution of the ’339 patent, the Examiner rejected the pending dependent claim 22 reciting “The system of claim 19: wherein the digital signal processor applies an FFT algorithm to correct optical and/or digital aberrations.” EX1039, 142-143, 155. The Examiner reasoned that “it is old and well-known in the art to have a system wherein the digital signal processor applies at least one FFT algorithm to correct the at least one optical aberration.” *Id*. The Examiner concluded that “[t]herefore it would have been obvious to one of ordinary skill in the art at the time the invention was made to have a system wherein the digital signal processor applies at least one FFT algorithm to correct at least one optical aberration so as to improve image quality.” *Id*., 143.

389. In response to the Examiner’s rejection, Patent Owner admitted in its Remarks that “[w]hile the Examiner refers to the use of a FFT algorithm as well-known in the industry, the present invention uses the FFT as one class of algorithm to apply to specific optical or digital aberrations in image files in order to provide solutions.” *Id*., 123. Patent Owner goes on to state that “[h]owever, the emphasis is not on the FFT algorithm, which the applicant does not claim to invent.” *Id*. “Rather, the emphasis is on the use of the microprocessor and system software to

access the database to identity problem, to identify solution (software algorithm) and to apply the algorithm to correct the aberration in the DSP." *Id*. Patent Owner explains that "[t]here is no reason not to include a powerful class of algorithm to the toolbox in order to solve the aberrations." *Id*.

390. It was well-known in the art to use FFT to process image corrections as reflected in other references besides Ito. *See* EX1037, 2:30-32, 5:5-11, 6:2-8, 20:67-21:3, 23:59-24:4, 17:51-18:4, 18:5-22, 19:47-20:15, Fig. 22 (teaching that the image data may be processed in the frequency domain using a "Fast Fourier Transform (FFT) algorithm and the FFT is used to refocus the image at different, user-specified depths); EX1040, Abstract, 1:7-11, 1:31-49, 3:1-12, 6:3-20, 9:36-67 (teaching a filter used to correct chromatic aberrations in image taken by a camera using the fast Fourier transform algorithm); EX1041, Abstract, 9:4-16 (teaching using Fourier transform algorithms to sharpen images in digital image processing); EX1042, 5:37-42, 9:43-48 (teaching a hardware Fast-Fourier transform (FFT) device used in digital image processing); EX1072, [029], Fig. 6 (teaching using FFT to correct captured image in a digital camera).

391. A POSA would have had a reasonable expectation of success in modifying the camera system in Sarbadhikari and Katagiri to include Ito's fast Fourier transform with straightforward and routine in the art, requiring only conventional skills because a POSA would have simply used Sarbadhikari's

processor (20) to execute a fast Fourier transform and Sarbadhikari's RAM instruction memory (31) and/or memory card (24) to store Ito's FFT algorithm and focal-length correction values.

B. <u>Claim 21</u>

392. Claim 21 is obvious over Sarbadhikari, Katagiri and Ito as explained below.

[21]: "The method of claim 1, wherein the image processing algorithms include a fast Fourier transform."

393. Claim 21 depends on claim 1. According to the '266 patent, the claimed "fast Fourier transform" (FFT) is a digital filter or algorithm. EX1001, 31:50-51. The '266 patent explains that the FFT is used to sharpen or soften an image. *Id*., 55-56.

394. According to Ito, chromatic aberration causes loss of sharpness in an image. EX1038, [0003]. To that end, Ito teaches a digital video camera which performs chromatic aberration corrections based on the correction values corresponding to focal length. EX1038, [0010]. Ito further teaches that "*Fast Fourier transform* can be used for chromatic aberration correction by digital signal processing." *Id*., [0017] (emphasis added). "Further, according to the present invention, in addition to the correction of the focal lengths of other colors with one color as a reference as in the above-described embodiment, the chromatic

aberration correction by the *fast Fourier transform* is performed for each color." *Id*., [0020] (emphasis added).

395. As discussed, a POSA reading Sarbadhikari would have understood that Sarbadhikari's enhancement files including various algorithms representing different types of user-adjustable filters. *Supra* § XI(D). Thus, a POSA would have been motivated to modify the camera type described in Sarbadhikari and Katagiri by adding a fast Fourier transform as taught in Ito as another filter or algorithm to Sarbadhikari's enhancement files stored in Sarbadhikari's instruction memory 31 and used by Sarbadhikari's programmable processor 20 to process image data. Both Sarbadhikari and Katagiri teach performing image corrections to correct or enhance color and sharpness of the captured images (*supra* §§ XI(A) and XII(A)), which is also the type of problem Ito was designed to solve by using a fast Fourier transform. And Patent Owner expressly admitted during prosecution of a related patent (the '339 patent) that there is no reason not to use a fast Fourier transform to solve the problem of aberrations. *Supra* § XV(A).

396. This implementation of adding an FFT filter to the camera type as described in Sarbadhikari and Katagiri would have been within a POSA's level of ordinary skill and success would have been reasonably expected with straightforward and routine in the art, requiring only conventional skills because a POSA would have simply used Sarbadhikari's processor (20) to execute Ito's fast

Fourier transform and Sarbadhikari's RAM instruction memory (31) and/or memory card (24) to store Ito's focal-length correction values. *Supra* § XV(A).

397. Thus, claim 21 is obvious over Sarbadhikari, Katagiri and Ito.

XVI. GROUND 6: CLAIM 28 WOULD HAVE BEEN OBVIOUS IN LIGHT OF SARBADHIKARI, KATAGIRI AND MIYAZAWA

398. Claim 28 is obvious over Sarbadhikari, Katagiri and Miyazawa as explained below.

A. Motivation to Combine

399. A POSA would have been motivated to combine the disclosures of Sarbadhikari, Katagiri and Miyazawa in a way that would yield the alleged invention claimed in the '266 patent, and a POSA reasonably would have expected success in doing so.

400. As discussed, both Sarbadhikari and Katagiri are analogous art to the '266 patent. *Supra* § XI(A). Similarly, Miyazawa also teaches a digital camera that can perform image corrections for images captured by a lens and an image sensor to which dust or dirt is adhered. EX1043, 1:16-18, 1:23-35, 1:38-60, 4:8-33. This the same problem that the '266 patent sought to solve. EX1001, 16:45-17:21. Thus, Miyazawa is also analogous art to the '266 patent. Moreover, Sarbadhikari, Katagiri, Miyazawa and the '266 patent all list the H04N subclass under the International Classification.

401. A POSA would have understood from Miyazawa's teachings that it would be beneficial to add Miyazawa's dirt detecting, judging and correcting capabilities to the type of camera described in Sarbadhikari and Katagiri. Miyazawa teaches a problem called "dirt or dust" that is adhered to the image sensor and that may cause image failure taken by a camera using interchangeable lens. EX1043, 1:23-34. A POSA would have understood that Sarbadhikari's camera system would have had the same problem of "dirt or dust" on the image sensor of Sarbadhikari's camera because Sarbadhikari may also use an interchangeable lens as taught in Miyazawa. Miyazawa explains specifically that the image failure caused by dirt on image sensor occur because "light does not enter a *picture element* portion on which dirt is adhered" to the image sensor. EX1043, 1:32-34 (emphasis added). Sarbadhikari also teaches that its camera system has an input section A including an "exposure section 10 for directing image light from a subject (not shown) toward an image sensor 12." EX1004, 5:59-61. "The sensor 12, which includes a two-dimensional array of photosites corresponding to *picture elements* of the image." *Id*., 5:65-6:10 (emphasis added). "The sensor 12 is exposed to image light so that analog image charge information is generated in respective photosites." *Id*. "The analog image signals are applied to an A/D converter 16, which generates a digital image signal from the analog input signals for each *picture element*." *Id*. (emphasis added).

402. A POSA reading Sarbadhikari and Miyazawa would have understood that Sarbadhikari's camera system will face the same problem as taught in Miyazawa when there is dirt or dust that is adhered to Sarbadhikari's image sensor 12 such that image light cannot enter a picture element of Sarbadhikari's image sensor 12. Thus, a POSA would have understood that Miyazawa's dirt detecting, judging and correcting capabilities would be beneficial to Sarbadhikari's camera system using a similar interchangeable lens as described in Miyazawa.

403. A POSA would have been motivated to modify the camera as described in Sarbadhikari and Katagiri by adding Miyazawa's dirt detecting, judging and correcting capabilities to Sarbadhikari's camera system to solve the "dust or dirt" problem because Sarbadhikari's image sensor 12 may have dirt or dust on it. And there is nothing in Sarbadhikari or Katagiri dissuading a POSA from using an interchangeable lens because it was well-known in the art that a digital camera can use an interchangeable or detachable lens. *See* EX1018, [0066] (teaching "an imaging lens 3 which is detachably attached to the camera main body"); EX1019, 6:41-42 (teaching that "digital cameras 10" has an "interchangeable lens"); EX1020, 1:30-33 (teaching a "single lens reflex camera" with an "interchangeable lens"); EX1005, [0008] (teaching a digital camera with a type of lens which can be changed).

404. It was also well-known in the art to detect dust on a digital image sensor and digitally correcting image failure caused by dust on the image sensor of a digital camera. *See* EX1048, Abstract, [0006]-[0014] (teaching a digital camera that uses a storage device for storing dust positions and a correction unit for correcting for the image of the dust to digitally eliminate the image of dust from an image obtained by an image sensor); EX1049, [0035], [0040], [0042], [0047]-[0060], Fig. 2 (teaching a method of correcting erroneous pixel values resulting from static defects of a CCD sensor, e.g., dust adhesion, sensor damage, etc.).

405. A POSA would have had a reasonable expectation of success with straightforward and routine in the art, requiring only conventional skills in modifying camera system in Sarbadhikari and Katagiri because a POSA would have simply added Miyazawa's dirt detecting, judging and correcting capabilities to Sarbadhikari's processor 20 and the information relating to the dirt position and the picture element defect positions stored in Miyazawa's memory (116, 117) to Sarbadhikari's memory card 24 and/or RAM instruction memory 31.

B. <u>Claim 28</u>

406. Claim 28 is obvious over Sarbadhikari, Katagiri and Miyazawa as explained below.

[28]: "The method of claim 1, further comprising: detecting dust on the digital image sensor; and digitally correcting for dust on a digital image sensor of the digital camera."

407. Miyazawa teaches that it "relates a digital camera to which a lens can be attached and to a dirt position detecting method for the digital camera." EX1043, 1:16-18. "A digital camera whose lens can be interchanged is also commercially available like a camera which transfers image data onto a film." *Id*., 1:23-35. "However, in the case of the digital camera whose lens can be interchanged, *there is a problem that dirt or dust (which are collectively called "dirt", hereinafter) is adhered to the image sensor device*, an image sensor device protecting glass fixed on the image sensor device, a surface of a filter and the like, or an optical system when the lens is interchanged." *Id*. (emphasis added) "It is an object of the present invention to provided [sic] a digital camera which can *correct the degradation of image quality of a shot image even if dirt is adhered to an image sensor device*, an image sensor device protecting glass fixed on the image sensor device or a filter when the lens is interchanged, and *to provide a dirt position detecting method for a digital camera for detecting a position of dirt* which causes image failure." *Id*., 1:38-45 (emphasis added).

408. Miyazawa goes on to teach how to detect and correction image failure due to dirt or dust on the image sensor. Specifically, Miyazawa teaches that "[a] digital camera of the present invention whose lens is detachable, comprises: a

judging section for judging whether an image failure is caused due to dirt adhering on an image sensor device unit including image sensor device; an illuminating member which is disposed in the vicinity of the image sensor device unit such that irradiation light can enter the image sensor device and which is driven when at least the judgment is made; a memory for storing a position of a picture element of the image sensor device corresponding to image sensor data causing image failure when the judging section judged that image failure has been caused; and a correcting section for correcting the image sensor data output from the image sensor device unit based on image position data stored in the memory when a picture is photographed after the lens is interchanged." *Id*., 1:46-60. Miyazawa explains that the CPU 110 controls the operations and the dirt position and the picture element defect positions are stored in memory (116, 117). *Id*., 4:8-23, 28-33.

409. A POSA would have understood that Miyazawa's "judging section for judging whether an image failure is caused due to dirt adhering on an image sensor" performs "detecting dust on the digital image sensor" and Miyazawa's "correcting section for correcting the image sensor data output from the image sensor device" performs "digitally correcting for dust on a digital image sensor of the digital camera."

410. A POSA would have been motivated to modify the camera type as described in Sarbadhikari and Katagiri in light of Miyazawa with straightforward and routine in the art, requiring only conventional skills because a POSA would have simply added Miyazawa's dirt detecting, judging and correcting sections to Sarbadhikari's processor 20 and the information relating to the dirt position and the picture element defect positions stored in Miyazawa's memory to Sarbadhikari's memory card 24 and/or RAM instruction memory 31. *Supra* § XVI (A).

411. Thus, claim 28 is obvious over Sarbadhikari, Katagiri and Miyazawa.

XVII. GROUND 7: CLAIM 29 WOULD HAVE BEEN OBVIOUS IN LIGHT OF SARBADHIKARI, KATAGIRI AND HAMILTON

412. Claim 29 is obvious over Sarbadhikari, Katagiri and Hamilton.

A. Motivation to Combine

413. A POSA would have been motivated to combine the disclosures of Sarbadhikari, Katagiri and Hamilton in a way that would yield the alleged invention claimed in the '266 patent, and a POSA reasonably would have expected success in doing so.

414. As discussed, both Sarbadhikari and Katagiri are analogous art to the '266 patent. *Supra* § XI(A). Similarly, Hamilton also teaches a digital camera that can perform image corrections for images captured by a lens and an image sensor on which defective pixels preexist. EX1044, Abstract, [0002], [0003], [0004], [0018]-[0020], [0025], Fig. 1. This is the same problem that the '266 patent sought

to solve. EX1001, 17:4-15. Thus, Hamilton is also analogous art to the ’266 patent. Moreover, Sarbadhikari, Katagiri, Hamilton and the ’266 patent all list the H04N subclass under the International Classification.

415. A POSA would have understood from Hamilton’s teachings that it would be beneficial to add Hamilton’s image correction capabilities for dead pixels to the type of camera described in Sarbadhikari and Katagiri. Hamilton teaches a problem called “corrupted data” in a digital image caused by defective pixels in an image sensor. EX1044, Abstract, [0003]. A POSA would have understood that Sarbadhikari’s camera system would have had the same problem on the image sensor of Sarbadhikari’s camera. Specifically, Sarbadhikari not only teaches a CCD image sensor 12 (*see e.g.*, EX1004, 6:3-5, Fig. 2), but also teaches data related to “sensor defect locations” which is stored in a removable memory. *Id.*, 3:2-7. A POSA would also understand that the sensor defect as taught in Sarbadhikari would have been caused by dead pixels. Thus, a POSA would have understood that Hamilton’s image correction capabilities for dead pixels would be beneficial to Sarbadhikari’s camera system suggesting sensor defects and their locations.

416. Hamilton’s teachings would have motivated a POSA to consider adding Hamilton’s image correction capabilities for corrupted data caused by dead pixels in image sensor to Sarbadhikari’s camera system to solve the “corrupted

data" problem, which is a type of defect in an image sensor as taught or suggested in Sarbadhikari.

417. It was well-known in the art to process image correction for image failure caused by dead pixels in digital image sensor of digital camera. *See* EX1045, Abstract, [0002], [0006]-[0008], [0019]-[0025], [0027], [0029]-[0030], Figs. 3, 4A and 4B (teaching a method for *correcting for dead pixels in a CMOS image sensor* used in relatively low-cost and small hand-held video cameras)(emphasis added); EX1046, 1:6-8 (teaching an operation of compensating for defective pixels in an image sensing device); EX1047, Abstract ("A defective pixel correction circuit corrects a defective pixel in a solid imaging device such as a CCD exactly and sufficiently"); EX1072, [032] (teaching a digital camera that uses interpolation from the values of the surrounding pixels to correct defective pixels on an image sensor).

418. A POSA would have had a reasonable expectation of success in modifying the camera system as disclosed in Sarbadhikari and Katagiri with straightforward and routine in the art, requiring only conventional skills because a POSA would have simply added Hamilton's "defect map" and "interpolation algorithm" to Sarbadhikari's memory card 24 and/or RAM instruction memory 31 so that Sarbadhikari's processor 20 or digital signal processor 22 can perform image corrections for corrupted data caused by dead pixels in an image sensor.

B. <u>Claim 29</u>

419. Claim 29 is obvious over Sarbadhikari, Katagiri and Hamilton as explained below.

[29]: "The method of claim 1, further comprising: correcting for a dead pixel on a digital image sensor of the digital camera."

420. Claim 29 depends on claim 1. There is only one single paragraph in the '266 patent mentioning deal pixels referred to as "permanent pixel dysfunctions," as opposed to "temporary pixel aberrations (viz., dust)." *See* EX1001, 17:4-15. The '266 patent cursorily explains that "a map is built to discover, isolate and interpolate bad pixels, which are a permanent problem revealing a key limit in digital sensor technology." *Id*. "In both cases, the camera works from these maps to correct the aberrations on a pixel-level." *Id*.

421. The combination of Sarbadhikari and Katagiri does not expressly teach "correcting for a dead pixel on a digital image sensor of the digital camera," which is disclosed by Hamilton.

422. Specifically, Hamilton teaches an electronic still camera which is divided into an input section 2 and an interpolating and recording section 4. EX1044, [0019], Fig. 1. Hamilton explains that "[t]he present invention relates to correcting for corrupted data in a *digital* image caused by defective pixels in an image sensor." *Id*., [0002] (emphasis added). "The present invention corrects for corrupted data in an output image caused by one or more defective pixels." *Id*.,

[0018]. "The algorithm for replacing the corrupted image data can be implimented [*sic*] in the digital signal processing block 22, although other arrangements are possible." [0025], Fig. 1 (annotated). "The digital signal processor 22 applies an *interpolation algorithm* to the digital image signals, and sends the interpolation signals to a conventional, removable memory card 24 via a connector 26." *Id.*, [0020] (emphasis added).

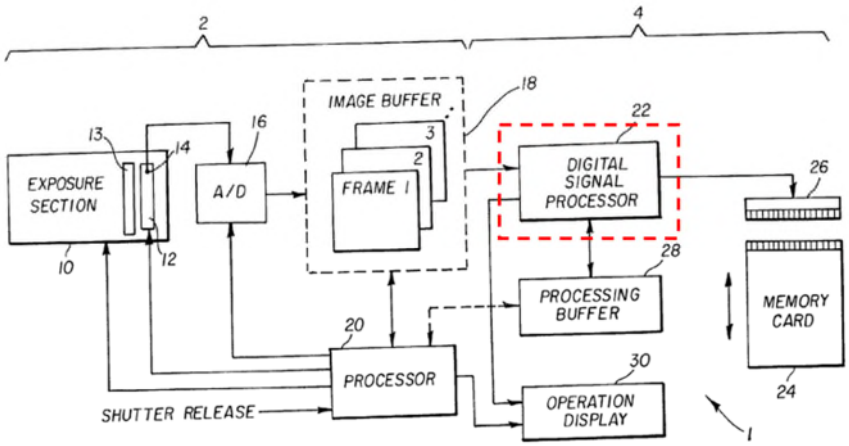

FIG. 1

EX1044, Fig. 1

423. According to Hamilton, "[i]t is an object of the present invention to provide an improved method for correcting for a line of corrupted data in a *digital* image formed by an image sensor with a defective pixel." *Id.*, [0004] (emphasis added). To that end, Hamilton discloses "a method for correcting for defects in a digital image taken by an image sensor when there is a pre-existing defect in at least one pixel of the image sensor which causes a line of pixels in the digital image to have corrupted data, comprising the steps of: (a) providing a *defect map*

which identifies the position of the defective pixel and specifies the line of pixels which during readout will be caused to have corrupted data; (b) capturing the digital image in the image sensor and readout such digital image to provide the digital image with the line of pixels in the digital image having corrupted data; (c) computing classifiers based on adjacent non-corrupted pixel data which indicate that there is a horizontal edge or a diagonal edge feature which passes through the defective column; and (d) adaptively replacing the data in the corrupted image pixels by selecting an *algorithm* which correponds [*sic*] to the edge feature identified by the classifier and using the valid data in the neighboring non-corrupted pixels of the selected edge feature." *Id*., [0006]-[0010] (emphasis added).

424. A POSA would have understood that Hamilton's method for correcting defects in a digital image caused by a pre-existing defect in a pixel of an image sensor using "defect map" and the "interpolation algorithm" constitutes "correcting for a dead pixel on a digital image sensor of the digital camera" as recited in claim 29.

425. A POSA would have been motivated to modify the camera type as described in Sarbadhikari and Katagiri in light of Hamilton with straightforward and routine in the art, requiring only conventional skills because a POSA would have simply added Hamilton's "defect map" and "interpolation algorithm" to

Sarbadhikari's memory card 24 and/or RAM instruction memory 31 for Sarbadhikari's processor 20 to perform "correcting for a dead pixel on a digital image sensor of the digital camera." *Supra* § XVII (A).

426. Thus, claim 29 is obvious in light of Sarbadhikari, Katagiri and Hamilton.

XVIII. SECONDARY CONSIDERATIONS

427. At this time, after review of the documents and materials cited herein, such as the prosecution history of the '266 patent, I have found no evidence of secondary considerations or objective factors of non-obviousness, and it is my opinion that claims 1-30 of the '266 patent are obvious over the prior art. And to the extent Patent Owner alleges secondary considerations in this proceeding, it is my opinion that they would not outweigh the strong evidence of obviousness of the challenged claims of the '266 patent, as set forth herein. I have been informed that if Patent Owner presents in this proceeding evidence of objective factors that it argues support a finding of non-obviousness, I may be asked to review such evidence and to formulate an opinion and reserve the right to address any such evidence and/or arguments that Patent Owner may raise in this regard.

XIX. CONCLUSION

428. In summary, I have concluded that each limitation of the challenged claims is invalid as obvious under Pre-AIA 35 U.S.C. § 103 in light of the prior art

references and the knowledge of one of ordinary skill in the art, as described in this declaration.

429. Furthermore, I have used my background and experience in forming my opinions that claims 1-30 are rendered obvious over the prior art.

430. To the extent it is argued that any further disclosure is required for a limitation in claims 1-30 than I have identified above, a POSA would have found that limitation obvious to include based on the same disclosure and analysis I have identified above. I reserve the right to supplement my opinions in the future to respond to any arguments that Patent Owner or its expert(s) may raise, and to take into account new information as it becomes available to me.

I hereby declare under penalty of perjury under the laws of the United States of America that the foregoing is true and correct, and that all statements made of my own knowledge are true and that all statements made on information and belief are believed to be true. I understand that willful false statements and the like are punishable by fine or imprisonment, or both (18 U.S.C. § 1001).

Executed on October 8, 2024

Robert L. Stevenson