(19) Japan Patent Office (JP)

(12) JAPANESE UNEXAMINED PATENT APPLICATION PUBLICATION (A)

(11) Patent Number
JP 2000-41179 A
(P2000-41179A)

(43) Publication Date: February 8, 2000 (Heisei 12)

(51) Int. Cl.[7]	Ident. Code	F I		Theme Code (Reference)	
H04N 5/235		H04N 5/235			5B047
G06T 1/00		9/07		A	5C022
H04N 9/07		G06F 15/64		400D	5C065

Examination Request: Not Yet Total No. of Claims: 5 OL (Total 8 pages)

(21) Application No. JP H10-207353 A

(22) Date of Filing July 23, 1998 (Heisei 10)

(71) Applicant 000005821
Matsushita Electric Industrial Co., Ltd.
1006 Kadoma, Kadoma City, Osaka

(72) Inventor Takahiro Iwasawa
c/o Matsushita Electric Industrial Co., Ltd.
1006 Kadoma, Kadoma City, Osaka

(74) Agent 100076174
Patent Attorney Hideo Miyai

F Terms (Reference) 5B047 AA30 AB04 BA02 BB04 BC05 BC30 DA04
5C022 AA13 AB12 AB23 AB51 AB64 AC42 AC54 AC55 AC69
5C065 AA01 AA03 BB06 CC01 DD02 EE03 EE12 GG23 GG31 GG32

(54) [Title of Invention] SHADING CORRECTION METHOD OF IMAGE INPUT DEVICE AND IMAGE INPUT DEVICE

(57) [Abstract]
[Problem] To provide an image input device that selects shading correction data according to aperture value, zoom position, and lens type, and performs shading correction according to the imaging scene.
[Resolution Means] Shading correction data is selected based on a control signal output from an optical lens 101 capable of outputting a control signal of an aperture value, a zoom position, and a lens type, and shading correction corresponding to the position of the screen is performed by a multiplication operation of a digital signal. In addition, the shading correction data can also be calculated by a CPU to perform a new shading correction, and shading correction having reduced false color can be performed by providing shading correction data for each color signal of the CCD.

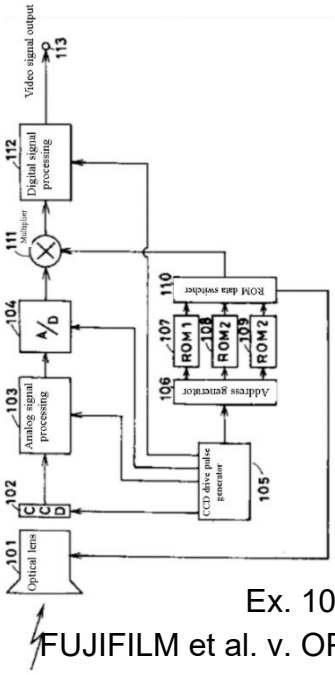

[Scope of Patent Claims]
[Claim 1] A shading correction method for an image input device, comprising: an optical lens capable of outputting one or more control signals of an aperture value, a zoom position, and a lens type; a single-plate imaging element having photoelectric conversion elements for performing photoelectric conversion arranged in two dimensions and color filters of different colors arranged on the photoelectric conversion elements; drive pulse generating means for generating a pulse to drive the imaging element; signal conversion means for performing analog-digital conversion of an imaging signal output by the imaging element; and signal processing means for synchronizing the imaging signal output by the imaging element by each different color signal and obtaining a video signal; wherein shading correction data corresponding to one or more conditions of the aperture value, zoom position, and lens type of the optical lens is stored in recording means, the shading correction data is selected by switching means by the control signal output from the optical lens, and the imaging signal converted into a digital signal by the signal conversion means is multiplied by the shading correction data selected by the switching means.
[Claim 2] A shading correction method for an image input device, comprising: an optical lens capable of outputting one or more control signals of an aperture value, a zoom position, and a lens type; a single-plate imaging element having photoelectric conversion elements for performing photoelectric conversion arranged in two dimensions and color filters of different colors arranged on the photoelectric conversion elements; drive pulse generating means for generating a pulse to drive the imaging element; signal conversion means for performing analog-digital conversion of an imaging signal output by the imaging element; and signal processing means for synchronizing the imaging signal output from the imaging element by each different color and obtaining an video signal; wherein shading correction data corresponding to one or more conditions of the aperture value, zoom position, and lens type of the optical lens is stored in rewritable recording means, and shading correction data suitable for an imaging optical system is written to the recording means by a control signal obtained from the optical lens by a CPU capable of finding the shading correction data of the imaging optical system via calculation when multiplying the imaging signal converted to a digital signal by the signal conversion means by the shading correction data recorded in the recording means.
[Claim 3] A shading correction method for an image input device, comprising: a step for calculating shading correction data corresponding to a different color filter of an imaging signal obtained by an imaging element; a step for adjusting the shading correction data in advance so that false color does not occur when a color signal is synchronized; and a step for multiplying the imaging signal by the shading correction data.
[Claim 4] An image input device, comprising: an optical lens capable of outputting one or more control signals of an aperture value, a zoom position, and a lens type; a single-plate imaging element having photoelectric conversion elements for performing photoelectric conversion arranged in two dimensions and color filters of different colors arranged on the photoelectric conversion elements; drive pulse generating means for generating a pulse to drive the imaging element; signal conversion means for performing analog-digital conversion of the imaging signal output from the imaging element; recording means that stores shading correction data corresponding to one or more conditions of the aperture value, zoom position, and lens type of the optical lens; switching means for switching the shading correction data by the control signal output from the optical lens; calculation means for multiplying the imaging signal converted to a digital signal by the signal conversion means by the shading correction data; and signal processing means for synchronizing the imaging signal output from the imaging element for each different color signal and obtaining a video signal.
[Claim 5] An image input device, comprising: an optical lens capable of outputting one or more control signals of an aperture value, a zoom position, and a lens type; a single-plate imaging element having photoelectric conversion elements for performing photoelectric conversion arranged in two dimensions and color filters of different colors arranged on the photoelectric conversion elements; drive pulse generating means for generating a pulse to drive the imaging element; signal conversion means for performing analog-digital conversion of the imaging signal output from the imaging element; rewritable recording means for storing shading correction data corresponding to one or more conditions of the aperture value, zoom position, and lens type of the optical lens; calculation means for multiplying the imaging signal converted to a digital signal by the signal conversion means by the shading correction data recorded by the recording means; a CPU that can find the shading correction data of an imaging optical system via calculation and writes shading correction data suitable for the imaging optical system to the recording means by a control signal obtained from the optical lens; and signal processing means for synchronizing the imaging signal output from the imaging element for each different color signal and obtaining a video signal.
[Detailed Description of Invention]
[0001]
[Technical Field of Invention] The present invention relates to an image input device having an optical system lens such as an electronic still camera or a video camera, and for obtaining a video signal, and a shading correction method of an image input device for correcting the shading characteristics of the lens.
[0002]
[Conventional Art] Conventionally, this type of image input device includes, for example, an electronic still camera that records still images on storage media such as a memory card. As illustrated in FIG. 6, this electronic still camera has an optical lens 601 storing a shading correction coefficient, a CCD 602 as an imaging element for performing photoelectric conversion and obtaining an imaging signal, analog signal processing 603 for performing correlated double sampling, signal amplification, or the like, an A/D converter 604 for

converting the imaging signal into a digital signal, digital signal processing 605 for synchronizing the imaging signal obtained from the CCD 602 for each different color signal to obtain a video signal, a drive circuit 606 that generates pulses for driving the CCD 602, a reference voltage operation circuit 607 for converting the shading correction coefficient read from the optical lens 601 to a reference voltage of the A/D converter 604, a D/A converter 608 for converting the digital signal output from the reference voltage operation circuit 607 to an analog amount and providing this as a reference voltage of the A/D converter 604, and a memory card 609 for storing an imaging signal obtained in digital signal processing, wherein shading correction is performed by reading the shading correction coefficient stored in the optical lens 601 by an address signal generated from a drive circuit 605, calculating the reference voltage given to the A/D converter 604 in the reference voltage operation circuit 607, and giving the reference voltage to the A/D converter 604 as an analog amount.

[0003] In other words, shading correction was performed by changing the input dynamic range of the imaging signal input to the A/D converter 604 (JP H6-197266).

[0004]

[Problem to be Solved by Invention] However, in such an image input device wherein, in order to correct the shading characteristic of the amount of light input through the optical lens 601 decreasing farther away from the center of the lens and the center thereof, it is configured such that shading correction is performed by changing the reference voltage of the A/D converter 604 for converting the imaging signal obtained from the CCD 602 to a digital signal as an analog amount, and changing the input dynamic range. Therefore, in an image input device wherein the reference voltage output from the D/A converter 608 stabilizes, the A/D converter 604 stabilizes and operates, time is required for performing proper digital conversion, and digital conversion is performed rapidly along with the high-pixelization of the CCD 602, it is not possible to perform fast and stable digital conversion, and high-accuracy shading correction cannot be realized.

[0005] Moreover, because the reference voltage of the A/D converter 604 is changed by an analog amount, an error in reference voltage occurs due to the variation in the D/A converter 608, so there is a problem that there is a difference in the shading correction for each image input device. Moreover, when the imaging signal corresponding to a different color filter arranged in the imaging element is multiplied by certain shading correction data, the correlation with the imaging signal corresponding to a nearby and adjacent different color filter is lost, and the imaging signal is subjected to color modulation, which causes a false color.

[0006] The present invention has been created to solve such problems, and provides a shading correction method for an image input device that can perform high-speed and accurate shading correction. Furthermore, the present invention also provides a shading correction method for an image input device that can reduce the generation of false color by multiplying an imaging signal by shading correction data corresponding to different adjacent color filters in an imaging signal output from a CCD.

[0007]

[Means for Solving Problem] The shading method for an image input device according to claim 1 is a shading correction method for an image input device provided with: an optical lens capable of outputting one or more control signals of an aperture value, a zoom position, and a lens type; a single-plate imaging element having photoelectric conversion elements for performing photoelectric conversion arranged in two dimensions and color filters of different colors arranged on the photoelectric conversion elements; drive pulse generating means for generating a pulse to drive the imaging element; signal conversion means for performing analog-digital conversion of an imaging signal output by the imaging element; and signal processing means for synchronizing the imaging signal output by the imaging element by each different color signal and obtaining a video signal; wherein shading correction data corresponding to one or more conditions of the aperture value, zoom position, and lens type of the optical lens is stored in recording means, the shading correction data is selected by switching means by the control signal output from the optical lens, and the imaging signal converted into a digital signal by the signal conversion means is multiplied by the shading correction data selected by the switching means.

[0008] According to the shading method of the image input device according to claim 1, the shading correction data recorded in the recording means is switched by the control signal obtained from the optical lens, and the shading correction of an optimal imaging optical system is automatically performed even when the aperture value, the zoom position, and the lens type of the optical lens are changed. Additionally, by performing a digital operation for multiplying the shading correction data by the digitally converted imaging signal as means for performing shading correction, it is possible to perform high-speed and accurate shading correction that does not cause variations in a device such as a D/A converter and does not cause changes over time, and this can also be readily expanded to LSIs.

[0009] The shading method for an image input device according to claim 2 is a shading correction method for an image input device provided with: an optical lens capable of outputting one or more control signals of an aperture value, a zoom position, and a lens type; a single-plate imaging element having photoelectric conversion elements for performing photoelectric conversion <u>arranged</u> in two dimensions and color filters of different colors arranged <u>on the photoelectric conversion elements</u>; drive pulse generating means for generating a pulse to drive the imaging element; signal conversion means for performing analog-digital conversion of an imaging signal output by the imaging element; and signal processing means for synchronizing the imaging signal output from the imaging element by each different color and obtaining an video signal; wherein shading correction data corresponding to one or more conditions of the aperture value, zoom position, and lens type of the optical lens is stored in

rewritable recording means, and shading correction data suitable for an imaging optical system is written to the recording means by a control signal obtained from the optical lens by a CPU capable of finding the shading correction data of the imaging optical system via calculation when multiplying the imaging signal converted to a digital signal by the signal conversion means by the shading correction data recorded in the recording means.

[0010] According to the shading method of the image input device according to claim 2, high-speed and accurate shading correction can be performed by performing shading correction by calculating the shading correction data using a CPU, reading out the shading correction data in response to an imaging signal written to rewritable recording means such as RAM and read out from the CCD, and multiplying the imaging signal by a digital signal that has undergone A/D conversion. Furthermore, configuring so that a program operated by the CPU can be changed from the outside, an image input device can be provided that enables shading correction for, for example, shooting, and the like, according to backlight correction and illumination, according to the scene of the subject.

[0011] The shading method of the image input device according to claim 3 is provided with: a step for calculating shading correction data corresponding to different color filters of the image signal obtained by the imaging element, a step for adjusting the shading correction data in advance so that false color does not occur when the color signal is synchronized, and a step for multiplying the imaging signal by the shading correction data.

[0012] According to the shading correction method according to claim 3, false color is suppressed and favorable shading correction is possible by applying a correction in advance to the shading correction data multiplied by the imaging signal corresponding to the different color filters arranged in the imaging element, using a coefficient corresponding to the color information of the respective color filters. The image input device according to claim 4 is provided with: an optical lens capable of outputting one or more control signals of an aperture value, a zoom position, and a lens type; a single-plate imaging element having photoelectric conversion elements for performing photoelectric conversion arranged in two dimensions and color filters of different colors arranged on the photoelectric conversion elements; drive pulse generating means for generating a pulse to drive the imaging element; signal conversion means for performing analog-digital conversion of the imaging signal output from the imaging element; recording means that stores shading correction data corresponding to one or more conditions of the aperture value, zoom position, and lens type of the optical lens; switching means for switching the shading correction data by the control signal output from the optical lens; calculation means for multiplying the imaging signal converted to a digital signal by the signal conversion means by the shading correction data; and signal processing means for synchronizing the imaging signal output from the imaging element for each different color signal and obtaining a video signal.

[0013] According to the image input device according to claim 4, the effect is similar to that of claim 1. The image input device according to claim 5 is provided with: an optical lens capable of outputting one or more control signals of an aperture value, a zoom position, and a lens type; a single-plate imaging element having photoelectric conversion elements for performing photoelectric conversion arranged in two dimensions and color filters of different colors arranged on the photoelectric conversion elements; drive pulse generating means for generating a pulse to drive the imaging element; signal conversion means for performing analog-digital conversion of the imaging signal output from the imaging element; rewritable recording means for storing shading correction data corresponding to one or more conditions of the aperture value, zoom position, and lens type of the optical lens; calculation means for multiplying the imaging signal converted to a digital signal by the signal conversion means by the shading correction data recorded by the recording means; a CPU that can find the shading correction data of an imaging optical system via calculation and writes shading correction data suitable for the imaging optical system to the recording means by a control signal obtained from the optical lens; and signal processing means for synchronizing the imaging signal output from the imaging element for each different color signal and obtaining a video signal.

[0014] According to the image input device according to claim 5, the effect is similar to that of claim 2.

[0015]

[Embodiment of Invention] The embodiments of the present invention will be described below using drawings. As illustrated in FIG. 1, the image input device of the first embodiment of the present invention images a subject image on a CCD 102 using an optical lens 101 capable of outputting one or more control signals of an aperture value, a zoom position, and a lens type. The CCD 102 is a single plate type imaging element wherein photoelectric conversion elements for performing photoelectric conversion are arranged in two dimensions and color filters of different colors are arranged on the photoelectric conversion elements, and an imaging signal of the CCD 102 is read by a drive signal generated in the CCD drive pulse generator 105. After correlated double sampling or signal amplification of the imaging signal is performed in an analog signal processing circuit 103, the imaging signal output from the analog signal processing circuit 103 is converted to a digital signal by the A/D converter 104, which is signal conversion means, and the shading correction data and the multiplication operation are performed by the multiplier 111, which is calculation means. The imaging signal that has undergone shading correction is synchronized for each different color signal and input to a digital signal processing circuit 112 for obtaining a video signal, and a video signal is obtained from a video signal output 113.

[0016] In relation to the shading correction data, in order to read out the shading correction data corresponding to the position of the screen, an address synchronized with the drive pulse output from the CCD drive pulse generator 105 is generated in an address generator 106, and the shading

correction data corresponding to the aperture value, the zoom position, and the lens type is read out from a ROM 107, a ROM 108, and a ROM 109, which are recording means stored in advance. In order to select the optimal shading correction data using the control signal from the optical lens 101, shading correction is performed by switching at a ROM data changer 110, inputting to the multiplier 111, and multiplying by the imaging signal converted to a digital signal. The ROM 107, the ROM 108, and the ROM 109 storing the shading correction data do not need to be ROMs as long as they are means that can be selected using the control signal output from the optical lens 101.

[0017] Here, as illustrated in FIG. 5, the shading correction corrects the shading characteristic wherein the signal level decreases as the distance increases from the center with respect to the imaging signal level near the center of the optical lens 101, and the shading correction data 502 stored in advance in the ROM is multiplied by the CCD signal 501 before shading correction read out from the CCD 102 using the multiplier 111, to correct to make it as if parallel light has entered the imaging element, such as in the CCD signal 503 after the shading correction.

[0018] As described above, the image input device of the first embodiment of the present invention can perform shading correction by selecting the type of shading correction data based on the control signal of the aperture value, the zoom position, and the lens type output from the optical lens 101, detecting the position of the screen using the address synchronized to the CCD drive pulse, and operating with the imaging signal using the multiplier 111, thereby making it possible to perform shading correction quickly, stably, and accurately without variation in the elements or change over time.

[0019] FIG. 2 illustrates the image input device of the second embodiment of the present invention, which differs from the first embodiment described above in that, instead of the ROMs 107 to 109 and the ROM data switcher 110, the device is provided with a RAM 208, which is rewritable recording means for storing shading correction data corresponding to one or more conditions of the aperture, the zoom position, and the lens type, and a CPU 206, which can find the shading correction data of the imaging optical system via calculation, and which writes shading correction data suitable for the imaging optical system to the RAM 208 using a control signal obtained from the optical lens 201. The CPU 206 has a program for calculating shading correction data in response to a control signal from the optical lens 201, and further has a program input 212 that can input a program from the outside, wherein a program corresponding to the scene of the subject can be used, and it is possible to freely switch the program for calculating shading correction data.

[0020] The shading correction in this image input device stores the shading correction data corresponding to one or more conditions of the aperture value, the zoom position, and the lens type of the optical lens in the RAM 208, and when the imaging signal converted to a digital signal by the A/D converter 204 is multiplied by the shading correction data recorded in the RAM 208, writes, to the RAM 208, shading correction data suitable for the imaging optical system using a control signal obtained from the optical lens 201 by the CPU 206 that find the shading correction data of the imaging optical system via calculation.

[0021] Note that, in the drawing, 202 is a CCD, 203 is an analog signal processing circuit, 204 is an A/D converter, 205 is a CCD drive pulse generator, 207 is an address generator, 209 is a multiplier, 210 is a digital signal processing circuit, and 211 is a video signal, and these are the same as the first embodiment. According to the second embodiment, quick and accurate shading correction can be performed by performing shading correction by calculating shading correction data using the CPU 206 and writing to rewritable recording means, for example, the RAM 208, reading out shading correction data in response to an imaging signal read out from the CCD 202, and multiplying the imaging signal by a digital signal that has undergone A/D conversion. Furthermore, by configuring such that the program operated by the CPU 206 can be changed from the outside, shading correction according to the scene of the subject, for example, backlight correction or shooting according to illumination becomes possible, and flexible handling becomes possible because the program for calculating shading correction data can be updated when a different type of optical lens is adopted.

[0022] Note that in the first embodiment and second embodiment described above, the imaging signals output from the CCDs 102 and 202 are converted into digital signals and shading correction is performed by performing a multiplication operation, but the multipliers 111 and 209 may be configured by an adding machine. Moreover, the imaging signals output from the CCDs 102 and 202 can achieve the same effect by, for example, performing shading correction after signal processing such as synchronizing is performed.

[0023] The shading correction method in the third embodiment of the present invention will be described using FIG. 3 and FIG. 4. FIG. 3 is an outline description diagram of the CCD 102 (or 202) corresponding to the imaging element, wherein different color filters are arranged on the photoelectric conversion element, 301 is a photoelectric conversion element having a red filter arranged, 302 is a photoelectric conversion element having a green filter arranged, and 303 is a photoelectric conversion element 303 having a blue filter arranged. The photoelectrically converted imaging signal is transferred through a vertical CCD 304, transferred to a horizontal CCD 305, further transferred at a high speed by a horizontal CCD and is amplified by an output amplifier 306, and the image signal is output by a CCD output 307.

[0024] As illustrated in FIG. 4, an imaging signal 401 output from the CCD 102 is output as a point sequential signal of different color signals such as an R-G line 402 and a G-B line 403 for each line. In order to convert the signal output from the CCD 102 into a video signal that can be used in video or the like, it is necessary to synchronize the respective color information. For example, at the position of the imaging signal in which the green filter is arranged, signal interpolation is applied from the imaging signal in which filters of different

colors that are adjacent to each other vertically, horizontally, and diagonally are arranged to generate color signals corresponding to blue and red. At this time, when the ratio of the red and blue color signals is not the same as the ratio of the red and blue color signals that originally entered the green color filter, false color will occur. Therefore, for the shading correction data, different shading correction data is prepared for each of these color signals, and shading correction is performed using the image input device illustrated, for example, in the first embodiment or the second embodiment. Doing this makes it possible to perform shading correction that does not generate false color even when, for example, the red, blue, and green colors are synchronized using the surrounding red and blue color information in a place where there is only green color information.

[0025] That is, this shading correction method includes: a step for calculating shading correction data corresponding to a different color filter of an imaging signal obtained by an imaging element; a step for adjusting the shading correction data in advance so that false color does not occur when a color signal is synchronized; and a step for multiplying the imaging signal by the shading correction data.

[0026] In this manner, false color generation is suppressed and favorable shading correction is possible by applying a correction in advance to the shading correction data multiplied by the imaging signal corresponding to the different color filters arranged in the imaging element using a coefficient corresponding to the color information of the respective color filters. Note that in the above embodiments, the color filters arranged on the CCD are red, green, and blue, but color filters such as magenta, yellow, cyan, and white are also possible.

[0027]

[Effect of Invention] According to the shading correction method of the image input device according to claim 1, the shading correction data recorded in the recording means is switched by the control signal obtained from the optical lens, and the shading correction of an optimal imaging optical system is automatically performed even when the aperture value, the zoom position, and the lens type of the optical lens are changed. Additionally, by performing a digital operation for multiplying the shading correction data by the digitally converted imaging signal as means for performing shading correction, it is possible to perform high-speed and accurate shading correction that does not cause variations in a device such as a D/A converter and does not cause changes over time, and this can also be readily expanded to LSIs.

[0028] According to the shading correction method of the image input device according to claim 2, high-speed and accurate shading correction can be performed by performing shading correction by calculating the shading correction data using a CPU, reading out the shading correction data in response to an imaging signal written to rewritable recording means such as RAM and read out from the CCD, and multiplying the imaging signal by a digital signal that has undergone A/D conversion. Furthermore, configuring so that a program operated by the CPU can be changed from the outside, an image input device can be provided that enables shading correction for, for example, shooting, and the like, according to backlight correction and illumination, according to the scene of the subject.

[0029] According to the shading correction method for an image input device according to claim 3, false color is suppressed and favorable shading correction is possible by applying a correction in advance to the shading correction data multiplied by the imaging signal corresponding to the different color filters arranged in the imaging element, using a coefficient corresponding to the color information of the respective color filters. According to the image input device according to claim 4, the effect is similar to that of claim 1.

[0030] According to the image input device according to claim 5, the effect is similar to that of claim 2.

[Brief Description of Drawings]

[FIG. 1] is a block diagram illustrating an image input device of the first embodiment of the present invention.

[FIG. 2] is a block diagram illustrating an image input device of the second embodiment.

[FIG. 3] is an outline description diagram of the CCD for describing a shading correction method of the third embodiment.

[FIG. 4] is a signal waveform diagram for illustrating a shading correction method of the third embodiment.

[FIG. 5] is a signal waveform diagram describing shading correction of the image input device of the first embodiment and the second embodiment.

[FIG. 6] is a block diagram illustrating a conventional image input device.

[Description of Reference Numerals]

101 Optical lens
102 CCD
103 Analog signal processing
104 A/D converter
105 CCD drive pulse generator
106 Address generator
107, 108, 109 ROM
110 ROM data switcher
111 Multiplier
112 Digital signal device
113 Video signal output
201 Optical lens
202 CCD
203 Analog signal processing
204 A/D converter
205 CCD drive pulse generator
206 CPU
207 Address generator
208 RAM
209 Multiplier
210 Digital signal device
211 Video signal output
212 Program input
301 Photoelectric conversion element having a red filter arranged
302 Photoelectric conversion element having a green filter arranged

303 Photoelectric conversion element having a blue filter arranged
304 Vertical CCD
305 Horizontal CCD
306 Output amplifier
307 CCD output
401 Imaging signal
402 R-G line
403 G-B line
501 CCD signal before shading correction
502 Shading correction data
503 CCD signal after shading correction
601 Optical lens
602 CCD
603 Analog signal processing
604 A/D converter
605 Digital signal processing
606 Drive circuit
607 Reference voltage operation circuit
608 D/A converter
609 Memory card

*

[FIG. 1]

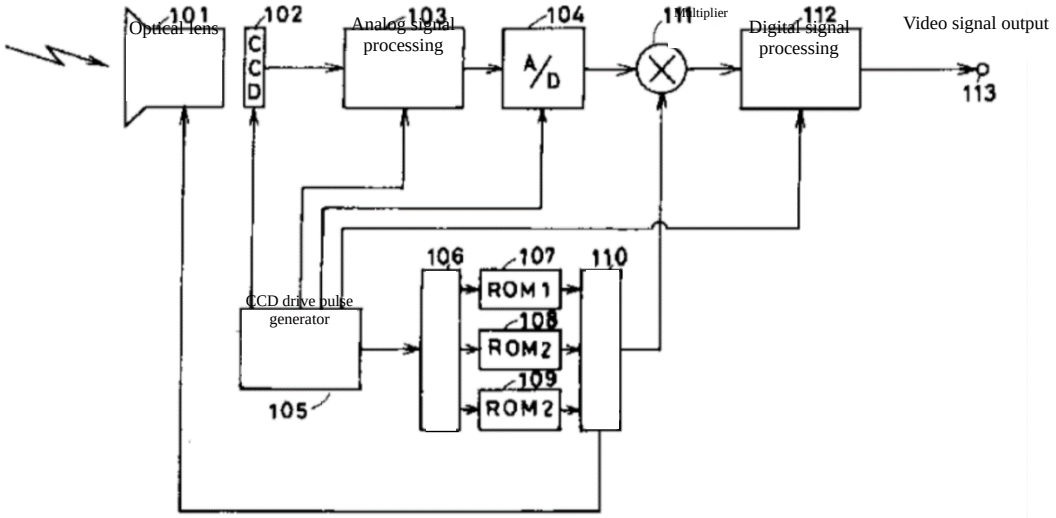

[FIG. 2]

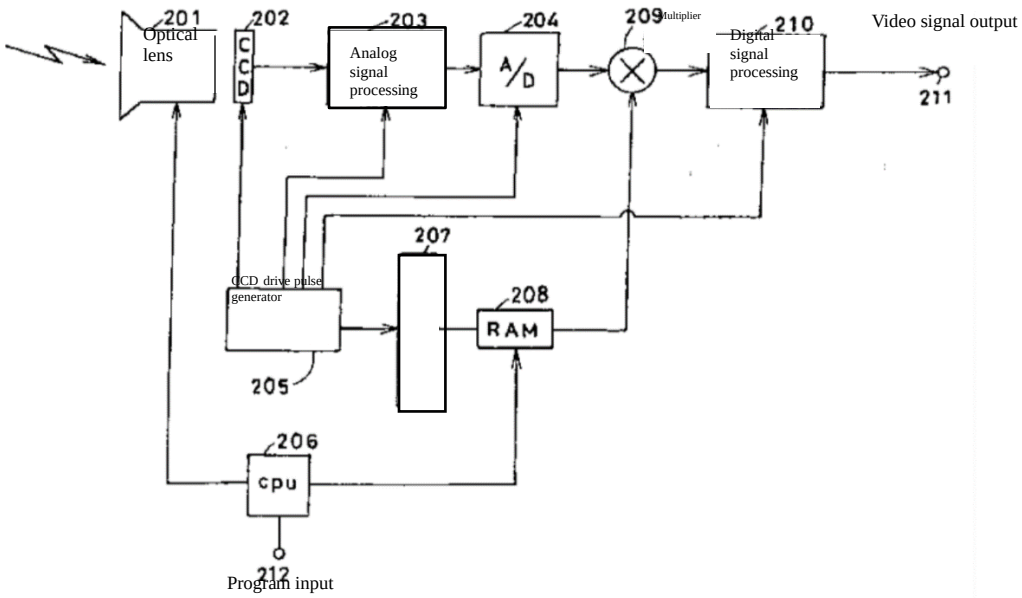

[FIG. 3]

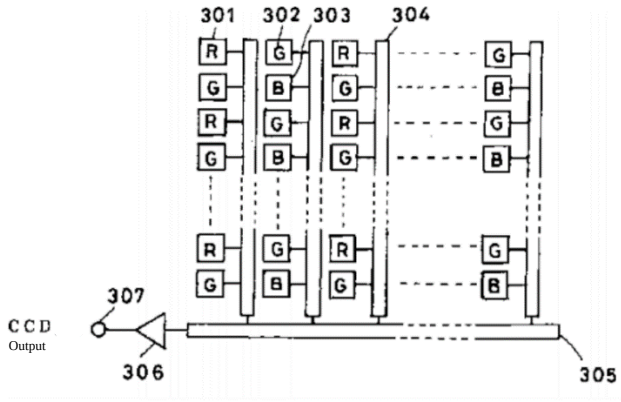

[FIG. 4]

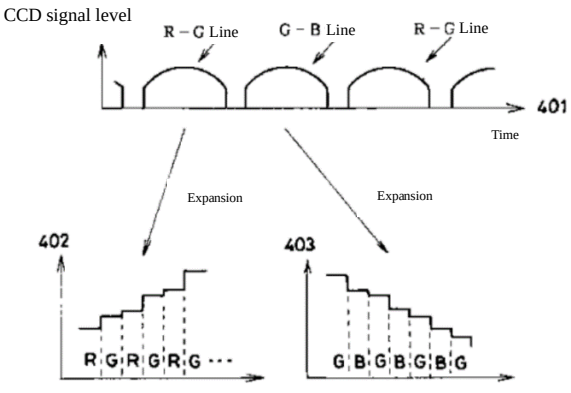

[FIG. 5]

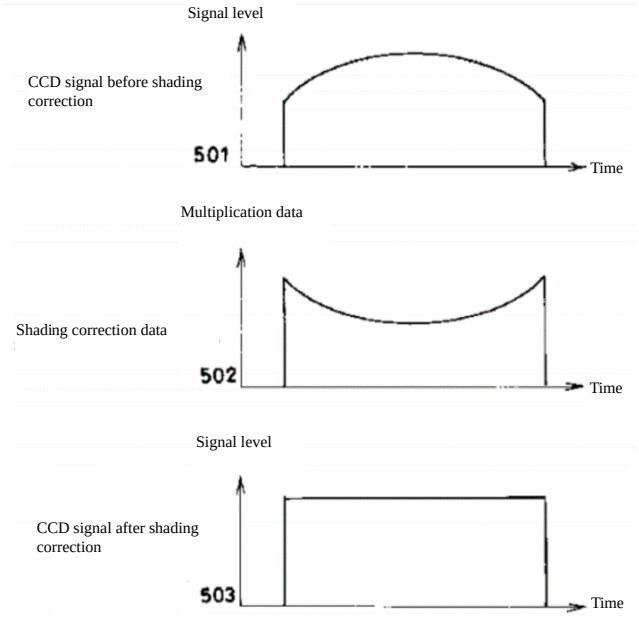

[FIG. 6]

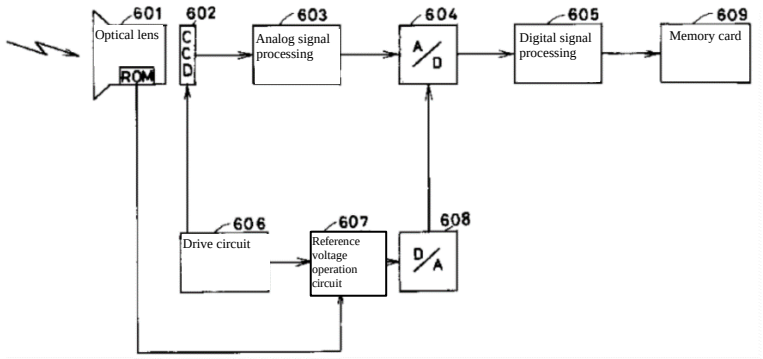

DECLARATION OF TRANSLATION

I, Travis Huntsman, declare the following:

1. I am over 18 years of age and competent to make this declaration.

2. I am a qualified Japanese to English translator with more than 9 years of experience.

3. I have translated into English the attached document identified as "Unexamined Japanese Patent Publication No. JP 2000-41179A," bearing a publication date of February 8, 2000.

4. I affirm that the translated text has been translated and edited to the best of my ability and knowledge to accurately reflect the content, meaning, and style of the original text. I hereby certify under penalty of perjury under the laws of the United States of America that the foregoing constitutes, pursuant to my knowledge and belief, a true and correct translation of the original document.

5. I declare that all statements made herein of my knowledge are true, and that all statements made on information and belief are believed to be true, and that these statements were made with the knowledge that willful false statements and the like are punishable by fine or imprisonment, or both, under Section 1001 of Title 18 of the United States Code.

Travis Huntsman

Dated and signed on August 22, 2024.