(19) Japan Patent Office (JP)

(12) JAPANESE UNEXAMINED PATENT APPLICATION PUBLICATION (A)

(11) Patent Application JP 2004-320567 (P2004-320567A)

(43) Publication Date: November 11, 2004 (Heisei 16)

(51) Int. Cl.[7]	FI			Theme Code (Reference)
H04N 5/232	H04N	5/232	Z	5C022
B60R 1/00	B60R	1/00	A	5C054
B60R 21/00	B60R	21/00	624C	
H04N 5/225	B60R	21/00	626G	
H04N 7/18	H04N	5/225	C	

Examination Request: Not Yet Total No. of Claims: 9 OL (Total 15 pages) Continued on Final Page

(21) Application No. JP 2003-113437 (P2003-113437)

(22) Date of Filing April 17, 2003 (Heisei 15)

(71) Applicant 000002130
Sumitomo Electric Industries Ltd.
4-5-33 Kitahama, Chuo-ku, Osaka-shi, Osaka-fu

(74) Agent 100078868
Patent Attorney, Takao Kono

(72) Inventor Takeo Uchino
c/o Sumitomo Electric Industries Ltd. Osaka Works
1-1-3 Shimaya, Konohana-ku, Osaka-shi, Osaka-fu

F-Term (Reference) 5C022 AA04 AC01 AC11 AC69
5C054 DA07 FC12 FD00 FE16 HA30

(54) [Title of Invention] IMAGING DEVICE, IMAGE DISPLAY SYSTEM, IMAGE DISPLAY METHOD, IMAGE PROCESSING SYSTEM, AND IMAGE PROCESSING METHOD

(57) [Abstract]
[Problem] To provide: an imaging device that, when constructing a system using captured image data, is capable of simplifying the design of the system without the need to separately provide an image processing device; an image display system and image display method using the imaging device; and an image processing system and image processing method.
[Resolution Means] In a display device 2, a plurality of programs are stored in a ROM 21, and a CPU 20 reads out from the ROM 21 and transmits to a camera 1 a program according to a control signal based on a selection from a driver sent by an operation unit 3. The CPU 10 of the camera 1, by executing the received program, performs image processing on image frames captured by the imaging unit 12, sequentially transmits the generated image frames to the displaying device 2, and the displaying device 2 displays the acquired image frames on the display unit 22.
[Selected Drawing] FIG. 1

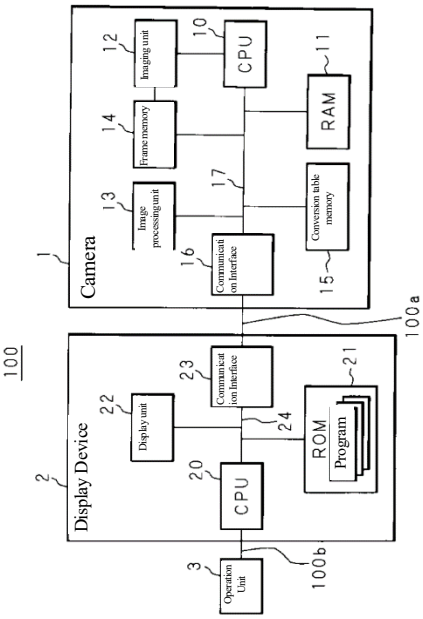

[Scope of Patent Claims]
[Claim 1]
An imaging device attached to a vehicle, the imaging device comprising:
storage means for storing a plurality of programs;
reception means for receiving selection of a program stored in the storage means; and
image processing means for executing the program for which selection was received by the reception means and performing image processing on captured image data.
[Claim 2]
The imaging device according to claim 1, comprising acquisition means for acquiring the program from outside, wherein
the storage means stores a program acquired by the acquisition means.
[Claim 3]
An image display system comprising the imaging device according to claim 1 or 2, and
a display device that displays the image data on which image processing was performed by the imaging device.
[Claim 4]
The image display system according to claim 3, wherein the imaging device and the display device are connected such that wireless communication is possible.
[Claim 5]
An image display method in which image data captured by an imaging device attached to a vehicle is displayed on a display device mounted on the vehicle, wherein:
the imaging device
stores a plurality of programs,
receives a selection of a stored program,
executes the program for which selection was received, and performs image processing on the captured image data; and
the display device
displays the image data on which the imaging device performed image processing.
[Claim 6]
An image processing system comprising an imaging device attached to a vehicle and an in-vehicle equipment connected to the imaging device, wherein:
the in-vehicle equipment comprises
equipment storage means for storing a plurality of programs,
reception means for receiving a selection of a program stored in the equipment storage means, and
sending means for sending to the imaging device the program for which the reception means received selection; and
the imaging device comprises
acquisition means for acquiring the program, and
means for executing the program acquired by the acquisition means to perform image processing on the captured image data.
[Claim 7]
The image processing system according to claim 6, wherein the sending means sends, by wireless communication, the program for which selection was received.
[Claim 8]
The image processing system according to claim 6 or 7, wherein the in-vehicle equipment is a display device.
[Claim 9]
An image processing method that performs image processing on image data captured by an imaging device attached to a vehicle, wherein
an in-vehicle equipment is connected to the imaging device,
the in-vehicle equipment
stores a plurality of programs,
receives a selection of a stored program,

sends a program for which selection was received to the imaging device, and
the imaging device
executes the acquired program to perform image processing on the captured image data.
[Detailed Description of the Invention]
[0001]
[Technical Field of the Invention]
The present invention relates to an imaging device attached to a vehicle for performing image processing on captured image data, an image display system and image display method for displaying the image data captured by the imaging device on a display device, and an image processing system and image processing method.
[0002]
[Conventional Technology]
As a device to assist driving of vehicles such as automobiles, an image display system has been devised in which an in-vehicle camera that captures a range including a blind spot of the driver is installed at an appropriate position on the vehicle, and the image captured by this in-vehicle camera is displayed on an in-vehicle displaying device (for example, see Patent Document 1).
By using this image display system, based on images captured of the left and right front or left and right rear of the vehicle, or the like, a driver of the vehicle is able to check for children and the like around the vehicle, such as the left and right front or left and right rear when, for example, starting off or entering a poorly visible intersection.
[0003]
Furthermore, in the above system, various kinds of image processing such as viewpoint conversion processing or graphic processing to add a scale or the like for estimating distance to image data captured by the in-vehicle camera are performed, and a system has also been proposed that is provided with a configuration to display images that are easier for the driver to see on the in-vehicle displaying device.
[0004]
[Patent Document 1]
JP 2001-219783 A
[0005]
[Problem to be Solved by the Invention]
However, in order to realize the above image display system, an image processing device for performing various kinds of image processing on the image data captured by the in-vehicle camera is required, and in the limited space inside the vehicle, there is a problem that the design of the system becomes complicated due to the addition of restrictions on the disposition of each part configuring the system provided with such an image processing device.
Furthermore, when a plurality of in-vehicle cameras are provided, one image processing device needs to perform various kinds of processing on the image data from the plurality of cameras, and there is a problem that a processing load on the image processing device is large.
[0006]
The present invention has been made in view of such circumstances, and has an object to provide an imaging device that, by providing an image processing unit that performs image processing on captured image data, has no need to separately provide an image processing device and is capable of simplifying the design of a system when constructing a system using captured image data.
[0007]
Another object of the present invention is to provide an imaging device that, by acquiring a program for achieving image processing from outside and storing the acquired program, has no need to store, in advance, programs for achieving each image processing and is also capable of updating and the like for each program.
[0008]
A further object of the present invention is to provide an image display system and an image display method that, by using the above imaging device to display, on the display device, the image data on which the imaging device performed various kinds of image processing, have no need to separately provide an image processing device for generating data for display for displaying on the display device from image data captured by the

imaging device, and are capable of simplifying the design of the system.

[0009]

A further object of the present invention is to provide an image display system that, by connecting the imaging device and the display device such that wireless communication is possible, has no need for a cable or the like connecting the imaging device and the display device, and because there is no need to consider wiring position of a cable, has expanded options for installation location of the imaging device and display device and is capable of attempting simplification of system design.

[0010]

A further object of the present invention is to provide an image processing system and an image processing method that, by the in-vehicle equipment in which a plurality of programs are stored sending a program that has received selection to the imaging device, and the imaging device performing, on the captured image data, image processing achieved by executing the program acquired from the in-vehicle equipment, are capable of performing various kinds of image processing on the captured imaging data based on the program from the in-vehicle equipment.

[0011]

A further object of the present invention is to provide an image processing system that, by being configured such that wireless communication between the imaging device and the in-vehicle equipment is possible, has no need for a cable or the like connecting the imaging device and the in-vehicle equipment, attempts simplification of a wiring process of a cable or the like, and has expanded options for installation location of the imaging device and in-vehicle equipment and so is capable simplifying system design.

[0012]

A further object of the present invention is to provide an image processing system that, by storing, in the display device, a program for achieving image processing performed by the imaging device, is capable of reducing a load of transmission processing of the program from the display device to the imaging device.

[0013]

[Means for Solving the Problem]

An imaging device according to a first invention is characterized by an imaging device attached to a vehicle, provided with: storage means for storing a plurality of programs; reception means for receiving selection of a program stored in the storage means; and image processing means for executing the program for which selection was received by the reception means and performing image processing on captured image data.

[0014]

An imaging device according to a second invention is characterized by being provided with acquisition means for acquiring the program from outside, wherein the storage means stores a program acquired by the acquisition means.

[0015]

An image display system according to a third invention is characterized by being provided with the imaging device according to the first or second invention and a display device that displays the image data on which image processing was performed by the imaging device.

[0016]

An image display system according to a fourth invention is characterized by the imaging device and the display device being connected such that wireless communication is possible.

[0017]

An image display method according to a fifth invention is characterized by an image display method in which image data captured by an imaging device attached to a vehicle is displayed on a display device mounted on the vehicle, wherein: the imaging device stores a plurality of programs, receives a selection of a stored program, executes the program for which selection was received, and performs image processing on the captured image data; and the display device displays the image data on which the imaging device performed image processing.

[0018]

An image processing system according to a sixth invention is characterized by an image processing system provided with an imaging device attached to a vehicle and an in-vehicle equipment connected to the imaging device, wherein: the in-vehicle equipment is provided with equipment storage means for storing a plurality of

programs, reception means for receiving a selection of a program stored in the equipment storage means, and means for sending to the imaging device the program for which the reception means received selection; and the imaging device is provided with acquisition means for acquiring the program, and means for executing the program acquired by the acquisition means to perform image processing on the captured image data.

[0019]

An image processing system according to a seventh invention is characterized by the sending means sending, by wireless communication, the program for which selection was received.

[0020]

An image processing system according to an eighth invention is characterized by the in-vehicle equipment being a display device.

[0021]

An image processing method according to a ninth invention is characterized by an image processing method that performs image processing on image data captured by an imaging device attached to a vehicle, wherein an in-vehicle equipment is connected to the imaging device, the in-vehicle equipment stores a plurality of programs, receives a selection of a stored program, sends program for which selection was received to the imaging device, and the imaging device executes the acquired program to perform image processing on the captured image data.

[0022]

According to the first invention, by the imaging device being provided with storage means for storing a plurality of programs, receiving a selection of a stored program by reception means, executing the program for which selection was received, and performing image processing on the captured image data, there is no need to separately provide an image processing device and it is possible to simplify the design of a system when constructing a system using image data captured by the imaging device.

Furthermore, it is possible to perform various kinds of image processing based on a program for achieving image processing stored in advance, and further, it is possible to select image processing to perform on captured image data from outside.

[0023]

According to the second invention, by the imaging device acquiring a program from outside by the acquisition means and storing the acquired program in the storage means, there is no need to store, in advance, programs for achieving each image processing and updates and the like for each program are possible.

[0024]

According to the third and fifth inventions, by using the above imaging device to display, on the display device, image data captured by the imaging device and on which various kinds of image processing was performed, there is no need to separately provide an image processing device that generates data for display to display on the display device from image data captured by the imaging device, and it is possible to simplify the design of the system because use is possible as-is without performing further processing of various kinds on the image data output from the imaging device.

[0025]

According to the fourth invention, by connecting the imaging device and the display device configuring the image display system such that wireless communication is possible, there is no need for a cable or the like to connect the imaging device and the display device, and it is possible to simplify a wiring process for cables and the like. Furthermore, because there is no need to consider wiring position of a cable connecting the imaging device and the display device, options for installation location of the imaging device and display device are expanded and system design is simplified.

[0026]

According to the sixth and ninth inventions, the in-vehicle equipment is provided with equipment storage means for storing a plurality of programs, receives a selection of a stored program by the reception means, and sends the program for which selection was received to the imaging device. Furthermore, by the imaging device acquiring a program from the in-vehicle equipment by the acquisition means, and executing the acquired program to perform image processing on the captured image data, the imaging device has no need to store the program in advance and is also capable of performing various kinds of image processing based on the program

from the in-vehicle equipment.

[0027]

According to the seventh invention, by the in-vehicle equipment being provided with a configuration to send by wireless communication to the imaging device the program for which selection was received by the reception means, wireless communication between the imaging device and the in-vehicle equipment is possible, there is no need for a cable or the like to connect the imaging device and the in-vehicle equipment, and simplification of a wiring process of cables and the like is attempted. Furthermore, because there is no need to consider wiring position of a cable connecting both devices, options for installation location of the imaging device and in-vehicle equipment are expanded and system design is simplified.

[0028]

According to the eighth invention, by storing, in the display device, a program for achieving image processing performed by the imaging device, it is possible to reduce a load of transmission processing of the program because the program is used in the image display system for displaying, on the display device, image data captured by the imaging device.

[0029]

[Embodiments of the Invention]

The present invention will be described in detail below based on drawings illustrating embodiments thereof. Note that in the present embodiments, an example is described of an automobile (vehicle) mounted with a camera (imaging device) and a displaying device (display device, in-vehicle equipment) that displays an image captured by the camera. Furthermore, the image is configured by, for example, 30 image frames (image data) per second.

[0030]

(Embodiment 1)

FIG. 1 is a block diagram illustrating a configuration example of an image display system according to embodiment 1, wherein an image display system 100 according to the present invention is provided with a camera 1 that captures and takes in image frames, a displaying device 2 such as a liquid crystal display or a CRT (cathode-ray tube) display, and an operation unit 3 as a user interface for specifying a display mode of an image frame captured by the camera 1 on the display device 2.

[0031]

The camera 1, displaying device 2 and operation unit 3 are capable of being connected via a dedicated transmission line or in-vehicle LAN (local area network) conforming to IEEE (Institute of Electrical and Electronic Engineers) 1394, or the like, and in the present embodiment, the camera 1 and the display device 2 are connected via a network cable 100a, and the displaying device 2 and the operation unit 3 are connected via a dedicated transmission line 100b.

[0032]

The camera 1 controls operation of each of the following hardware units connected via a bus 17, using a CPU (central processing unit) 10 as a control center.

The bus 17 is connected to a RAM 11, a conversion table memory 15, a frame memory 14, an image processing unit (image processing means) 13, a communication interface 16, and the like.

[0033]

The communication interface 16 operates as acquisition means for acquiring digital data such as a program from the displaying device 2 via the network cable 100a, and the digital data acquired from the displaying device 2 is stored in the RAM 11 via the bus 17.

The RAM 11 is configured by SRAM, DRAM, or the like, and operates as storage means for storing various programs needed for various operations of the camera 1 and acquired from the displaying device 2 via the communication interface 16.

[0034]

The CPU 10 is provided with clocking means (not illustrated) and is configured to perform various kinds of image processing by, while clocking a timing, controlling various units of hardware via the bus 17 and sequentially executing programs stored in the RAM 11.

Furthermore, the CPU 10 is connected to an imaging unit 12 provided with a CCD (charge coupled device) or

the like, and the image frames captured by the imaging unit 12 are sequentially stored in the frame memory 14 configured by a RAM or the like.

[0035]

The image processing unit 13 performs predetermined image processing on the image frames stored in the frame memory 14 by executing a program in the RAM 11 by the CPU 10.

Note that, the program stored in RAM 11 includes a conversion table used for various types of image processing and when the CPU 10 uses the conversion table in the RAM 11, temporarily stores this conversion table in the conversion table memory 15, and the image processing unit 13 is able to perform reference processing of the conversion table at high speed by accessing the conversion table memory 15.

[0036]

The image frames on which image processing of various kinds was performed by the image processing unit 13 are transmitted to the displaying device 2 via the communication interface 16.

Note that when the displaying device 2 is configured to acquire an analog image signal, the camera 1 needs to be provided with a converter that converts the image frames processed by the image processing unit 13 into analog image frames of NTSC (National Television System Committee standard) data or the like.

[0037]

The displaying device 2 is provided with a CPU 20 as a control center, a ROM 21, a display unit 22 such as a liquid crystal display, a communication interface 23, and the like, and the CPU 20 controls operation of each above hardware unit via a bus 24.

A program (not illustrated) is stored in the ROM 21 as an operation of the displaying device 2. Furthermore, the ROM 21 operates as an equipment storage means for storing a program to achieve the image processing to be performed on the captured image frames by the camera 1. Note that, when the program that achieves the image processing to be performed by camera 1 is stored in a rewritable memory such as flash memory, each program may be updated.

[0038]

The communication interface 23 is connected to the camera 1 via the network cable 100a, and transmits, to the camera 1, data such as a program stored in the ROM 21 via this network cable 100a.

Furthermore, the communication interface 23 acquires image frames from the camera 1 and displays them on the display unit 22 by inputting the acquired image frames to the display unit 22.

[0039]

Furthermore, the CPU 20 of the displaying device 2 is connected via the transmission line 100b to the operation unit 3, which is used by the driver when selecting various kinds of image processing to cause the camera 1 to perform, and the operation unit 3, by an operation of the driver, functions as reception means for receiving a selection of a program stored in the ROM 21 of the displaying device 2, and when each unit is operated by the driver, the corresponding control signal is sent to the displaying device 2.

In the present embodiment, the operation unit 3 is configured to select to change the display mode on the displaying device 2 of the image frames captured by the camera 1, for example, to display image frames that are easy for the driver to see on the displaying device 2, such as execution of viewpoint conversion processing to be performed on the image frames acquired by the camera 1, execution of emphasis processing to detect a moving body in the image frames acquired by the camera 1 and display the detected moving body emphasized, and execution of cut-out processing to cut out a region specified by the driver from the image frames acquired by the camera 1.

[0040]

FIG. 2 is a diagram illustrating a configuration example of the operation unit 3 in the image display system 100 according to the present invention, and in FIG. 2, the operation unit 3 is provided on a lower portion of the display unit 22 of the displaying device 2, and a viewpoint conversion button 3a, a moving body emphasis button 3b, and a moving body cutout button 3c are provided.

In the present embodiment, the operation unit 3 sequentially sends to the displaying device 2: when the driver turns on the viewpoint conversion button 3a, for example, a control signal to display, on the displaying device 2, image frames that look like a view from above the vehicle; furthermore, when the driver turns on the moving body emphasis button 3b, for example, a control signal to display, surrounded by a frame, the moving object

detected from the image frames captured by the camera 1; and moreover, when the driver turns on the moving body cutout button 3c, for example, a control signal to cut out the moving body detected from the image frames captured by the camera 1 and display only the cut out region.

[0041]

As described above, when the operation unit 3 sends a control signal corresponding to the operation by the driver to the displaying device 2, the CPU 20 of the displaying device 2 reads out the program corresponding to this control signal from the ROM 21 based on the control signal acquired from the operation unit 3, and sends the program to the camera 1 via the communication interface 23.

Furthermore, the CPU 10 of the camera 1 may execute the image processing set by the driver by sequentially executing acquired programs. Moreover, by transmitting the image frames on which image processing was performed to the displaying device 2, the displaying device 2 may acquire and display on the display unit 22 the image frames captured by the camera 1 and on which predetermined image processing was performed.

[0042]

Therefore, for example, the display unit 22 illustrated in FIG. 2(a) sequentially displays the image frames captured by the camera 1, and when the driver turns on the moving body emphasis button 3b of the operation unit 3 while referring to this display unit 22, as described above, the operation unit 3 sends the corresponding control signal to the displaying device 2, the displaying device 2 sends the corresponding program to the camera 1, and by executing the program in the camera 1, as shown in FIG. 2(b), an image in which the moving body in the image frames is displayed emphasized surrounded by a frame may be displayed on the display unit 22.

[0043]

Display processing on the displaying device 2 of image frames captured by the camera 1 in the image display system 100 of the above configuration will be described below. FIG. 3 is a flowchart illustrating a display processing procedure of image frames in the image display system 100 according to embodiment 1.

[0044]

The CPU 20 of the displaying device 2 determines whether a control signal has been acquired from the operation unit 3 (S1). If a control signal has not been acquired (S1: NO), the CPU 20 displays the image frames sequentially acquired from the camera 1 on the display unit 22 and waits, and if a control signal has been acquired (S1: YES), the CPU 20 reads out the program corresponding to the acquired control signal from the ROM 21 and transmits the program to the camera 1 via the communication interface 23 (S2).

[0045]

On the other hand, the camera 1 determines whether the program from the displaying device 2 is acquired (S3), and when the program has been acquired (S3: YES), stores the acquired program in the RAM 11 (S4).

Furthermore, the CPU 10 of the camera 1 sequentially executes the acquired programs (S5), thereby causing the image processing unit 13 to perform predetermined image processing on the image frames captured by the imaging unit 12 and stored in the frame memory 14 to generate image frames.

[0046]

The image processing unit 13 transmits the generated image frames to the displaying device 2 via the communication interface 16 (S6), and the displaying device 2 inputs the received image frames via the communication interface 23 to the display unit 22 and sequentially displays the images frames on the display unit 22 (S7).

Thus, image processing desired by the driver is executed in the camera 1 and the generated image frames may be displayed on the displaying device 2.

[0047]

As described above, programs for achieving various kinds of image processing are stored in the ROM 21 of the displaying device 2, and each program is sequentially transmitted from the displaying device 2 to the camera 1 based on the selection from the driver, and by executing each program in the camera 1, various kinds of image processing may be performed in the camera 1, so there is no need to separately provide an image processing device for generating data for display to be displayed on the displaying device 2.

[0048]

In the above embodiment, a configuration was described in which programs for achieving image processing to be executed in the camera 1 are stored in the ROM 21 of the displaying device 2, but the programs may also

be configured to be stored in another in-vehicle equipment connected via the network cable 100a.
Furthermore, the camera 1 and the displaying device 2 may be configured to be connected via a digital signal line and a video transmission line, in which case, digital data such as a program sent from the displaying device 2 to the camera 1 is transmitted via the digital signal line, and a video signal sent from the camera 1 to the displaying device 2 is transmitted via the video transmission line.
[0049]
(Embodiment 2)
An image display system in embodiment 2 will be described below. Note that for a system having the same configuration as the image display system 100 of the above embodiment 1, the same reference signs are given and description is omitted.
FIG. 4 is a block diagram illustrating a configuration example of an image display system according to embodiment 2, where, in an image display system 101 according to the present embodiment, the camera 1 and the displaying device 2 are connected via the network cable 100a, and the camera 1 and the operation unit 3 are connected via a dedicated transmission line 100c.
[0050]
In the present embodiment, the camera 1 is provided with, instead of the RAM 11, a ROM 18 in which various kinds of programs are stored.
Furthermore, the operation unit 3 has the same configuration as the configuration described in embodiment 1, but the control signal from the operation unit 3 is configured to be input to the CPU 10 of the camera 1 via the transmission line 100c.
[0051]
The CPU 10 of camera 1 may cause the image processing unit 13 to achieve predetermined image processing by sequentially executing programs corresponding to control signals acquired from the operation unit 3. Note that, when the above various kinds of programs are stored in a rewritable memory such as flash memory, updates and the like of each program may be achieved.
[0052]
Display processing on the displaying device 2 of image frames captured by the camera 1 in the image display system 101 of the above configuration will be described below. FIG. 5 is a flowchart illustrating a display processing procedure of image frames in the image display system 101 according to embodiment 2.
[0053]
The CPU 10 of the camera 1 determines whether a control signal has been acquired from the operation unit 3 (S11), and when a control signal has been acquired (S11: YES), by reading out from the ROM 18 and sequentially executing the programs corresponding to the acquired control signal (S12), the CPU 20 causes the image processing unit 13 to perform predetermined image processing on the image frames captured by the imaging unit 12 and stored in the frame memory 14 to generate image frames.
[0054]
The image processing unit 13 transmits the generated image frames to the displaying device 2 via the communication interface 16 (S13), and the displaying device 2 inputs the received image frames via the communication interface 23 to the display unit 22 and sequentially displays the images frames on the display unit 22 (S14).
Thus, image processing desired by the driver is executed in the camera 1 and the generated image frames may be displayed on the displaying device 2.
[0055]
As described above, programs for achieving various kinds of image processing are stored in the ROM 18 of the camera 1, and by sequentially executing each program based on the selection from the driver, various kinds of image processing may be performed in the camera 1, so there is no need to separately provide an image processing device for generating data for display to be displayed on the displaying device 2.
Note that, in the image display system 101 in the above embodiment 2 as well, it is possible to apply the same variations as those described in the above embodiment 1.
[0056]
Furthermore, in the image display system 101 in the above embodiment 2, it is also possible to configure by an

interface such that wireless communication is possible between the communication interface 16 of the camera 1 and the communication interface 23 of the displaying device 2.

Note that by connecting the camera 1 and the displaying device 2 via a wireless network in this manner, the displaying device 2 is able to access the Internet via a wireless network in addition to communicating with the camera 1. Furthermore, in this case, wiring such a cable connecting the camera 1 and the displaying device 2 is unnecessary, and system configuration in the image display system 101 may be simplified.

[0057]

(Embodiment 3)

An image display system in embodiment 3 will be described below. Note that for a system having the same configuration as the image display system 100 of the above embodiment 1, the same reference signs are given and description is omitted.

FIG. 6 is a block diagram illustrating a configuration example of an image display system according to embodiment 3, where, in an image display system 103 according to the present embodiment, the camera 1 and the displaying device 2 are respectively provided with baseband circuits 19, 25 and RF elements 19a, 25a as a wireless communication interface instead of the communication interfaces 16, 23.

[0058]

The baseband circuits 19 and 25 are respectively provided with a memory (not illustrated) in which is stored a wireless communication control processing program conforming to, for example, the IEEE 802.11b standard wireless communication protocol, and by executing this wireless communication control processing program, data transmission processing may be performed by wireless communication via the respective RF elements 19a and 25a, whereby the camera 1 and the displaying device 2 are connected via a wireless LAN 103a that complies with the IEEE 802.11b standard.

Note that, the same effect may be obtained by a wireless communication control processing program conforming to IrDA (Infrared Data Association) standards which enables wireless communication using infrared rays, and Bluetooth standards, rather than a wireless communication control processing program that complies with the IRRR 802.11b standard.

[0059]

In the image display system 103 of the above configuration, the CPU 20 of the displaying device 2 reads out from the ROM 21 the program corresponding to the control signal acquired from the operation unit 3. Furthermore, by causing the baseband circuit 25 to execute a wired communication control processing program, the CPU 20 transmits the read out program to the camera 1 via the RF element 25a.

[0060]

Furthermore, the CPU 10 of the camera 1 may execute the image processing set by the driver on the image frames acquired by the imaging unit 12 by storing in the RAM 11 and sequentially executing acquired programs. Moreover, by the camera 1 transmitting the image frames on which image processing was performed to the displaying device 2, image frames on which predetermined image processing was performed may be displayed in the displaying device 2.

Note that other operations in the image display system 103 are the same as in embodiment 1, so description is omitted.

[0061]

The displaying device 2 in the present embodiment uses a configuration which may connect to the wireless LAN 103a via the baseband circuit 25 and RF element 25a, in addition to communication with the camera 1, and is capable of accessing the Internet via a hotspot (not illustrated) provided in the wireless LAN 103a, and a web browsing processing program for browsing a desired web page via the Internet, an email transception processing program for performing transception processing of email, and the like are stored in the ROM 21.

[0062]

Therefore, the CPU 20 of the displaying device 2 may access a predetermined mailbox on the Internet by executing the email transception processing program in the ROM 21 at a predetermined time interval, and receive an email addressed by the driver from this mailbox, and the driver may check this e-mail on the display unit 22 in the automobile.

[0063]

Furthermore, the operation unit 3 is provided with a web button (not illustrated) for executing web browsing processing, and when the driver turns on the web button, the CPU 20 of the displaying device 2 executes the web browsing processing program stored in the ROM 21, whereby a desired web page may be received from a desired web server device on the Internet, and the driver may display the desired web page on the display unit 22.

[0064]

As described above, by configuring such that wireless communication is possible between the camera 1 and the display device 2, wiring of a cable or the like for connecting the camera 1 and the display device 2 becomes unnecessary, restrictions on installation position of the camera 1 and the displaying device 2 are reduced, and design of the image display system 103 may be simplified.

Furthermore, in the image display system 103 in the above embodiment 3 as well, it is possible to apply the same variations as those described in the above embodiment 1.

[0065]

[Effect of the Invention]

According to the first invention, by the imaging device receiving a selection of a stored program, executing the program for which selection was received, and performing image processing on the captured image data, there is no need to separately provide an image processing device and the design of a system can be simplified when constructing a system using image data captured by the imaging device.

Furthermore, it is possible to perform various kinds of image processing based on a program for achieving image processing stored in advance, and further, it is possible to select image processing to perform on captured image data from outside.

[0066]

According to the second invention, by acquiring a program for achieving various kinds of image processing from outside, there is no need to store, in advance, various kinds of programs in the imaging device and updates and the like for each program are possible.

[0067]

According to the third and fifth inventions, by using the above imaging device to display, on the display device, image data on which various kinds of image processing was performed by the imaging device, there is no need to separately provide an image processing device that generates data for display to display on the display device from image data captured by the imaging device, and the design of the system can be simplified because use is possible as-is without performing further processing of various kinds on the image data output from the imaging device.

[0068]

According to the fourth invention, by connecting the imaging device and the display device configuring the image display system such that wireless communication is possible, there is no need for a cable or the like to connect the imaging device and the display device, and because there is no need to consider wiring position of a cable, options for installation location of the imaging device and display device are expanded and a wiring process for cables and the like can be simplified.

[0069]

According to the sixth and ninth inventions, the in-vehicle equipment stores a plurality of programs, sends the program for which selection was received to the imaging device, and by the imaging device that has acquired the program executing the acquired program to perform image processing on the captured image data, the imaging device has no need to store the program in advance and various kinds of image processing can be performed based on the program from the in-vehicle equipment.

[0070]

According to the seventh invention, by the in-vehicle equipment being provided with a configuration to send by wireless communication to the imaging device the program for which selection was received by the reception means, wireless communication between the imaging device and the in-vehicle equipment is possible, there is no need for a cable or the like to connect the imaging device and the in-vehicle equipment, and simplification of a wiring process of cables and the like is attempted, and because there is no need to consider wiring position of a cable connecting both devices, options for installation location of the imaging

device and in-vehicle equipment are expanded and simplification of system design can be attempted.

[0071]

According to the eighth invention, by storing, in the display device, a program for achieving image processing performed by the imaging device, a load of transmission processing of the program from the display device to the imaging device can be reduced.

[Brief Description of Drawings]

[FIG. 1] A block diagram illustrating a configuration example of an image display system according to embodiment 1.

[FIG. 2] A diagram illustrating a configuration example of an operation unit in the image display system according to the present invention.

[FIG. 3] A flowchart illustrating a display processing procedure of image frames in the image display system according to embodiment 1.

[FIG. 4] A block diagram illustrating a configuration example of an image display system according to embodiment 2.

[FIG. 5] A flowchart illustrating a display processing procedure of image frames in the image display system according to embodiment 2.

[FIG. 6] A block diagram illustrating a configuration example of an image display system according to embodiment 3.

[Description of Reference Signs]

100, 101 Image display system
1 Camera (imaging device)
10 CPU
11 RAM (storage means)
13 Image processing unit (image processing means)
16 Communication interface (acquisition means)
18 ROM (storage means)
19 Baseband circuit
2 Displaying device (display device, in-vehicle equipment)
21 ROM (equipment storage means)
25 Baseband circuit
3 Operation unit (reception means)

[FIG 1]

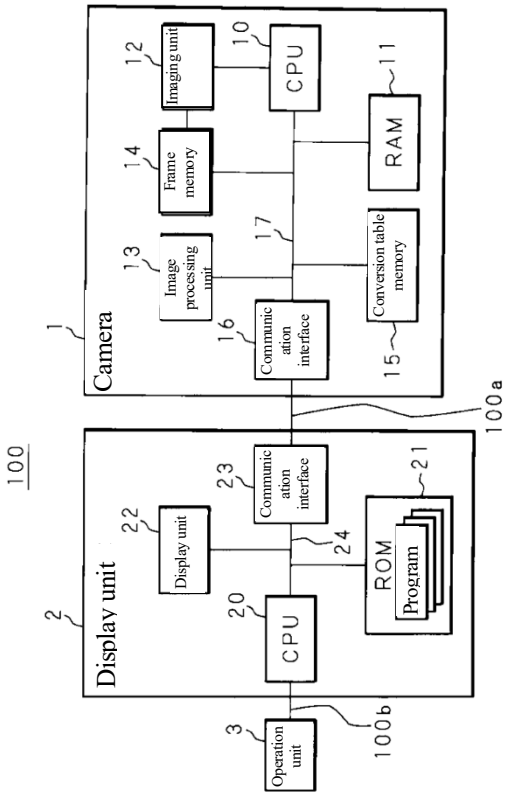

[FIG 2]

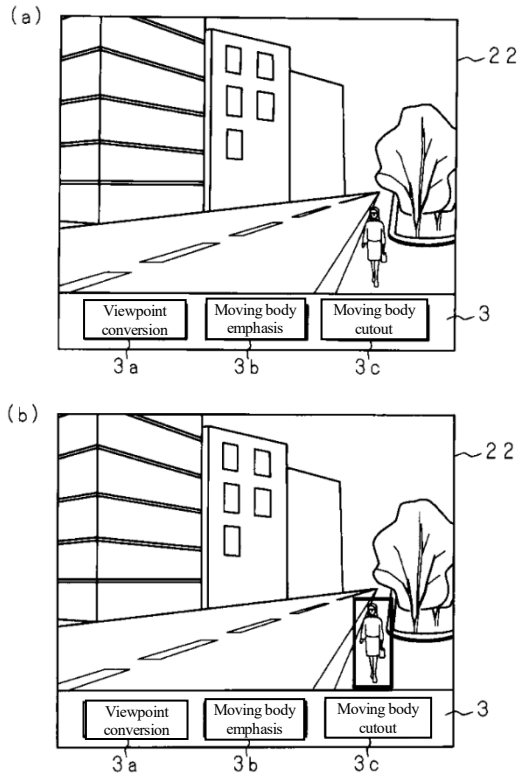

[FIG 3]

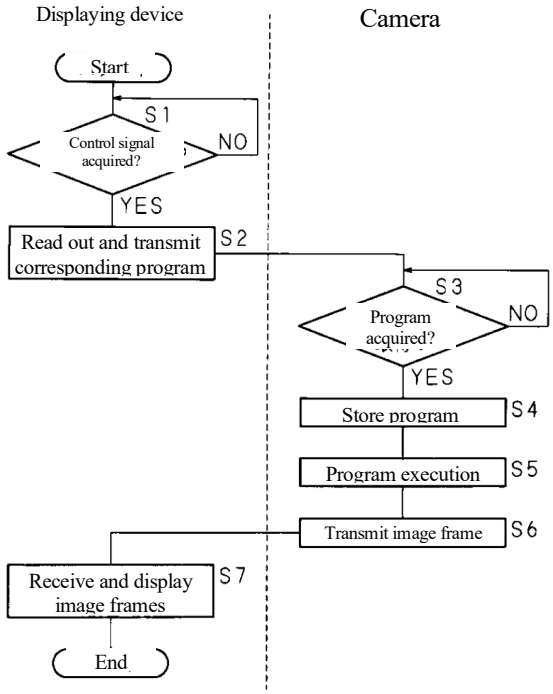

[FIG 4]

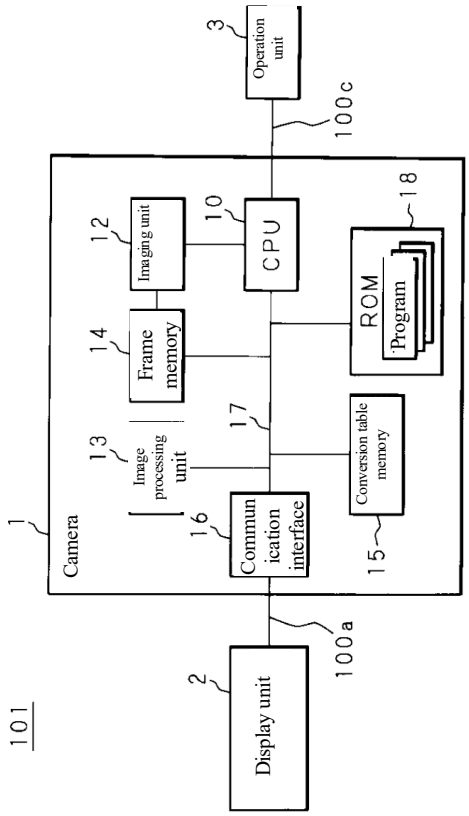

[FIG 5]

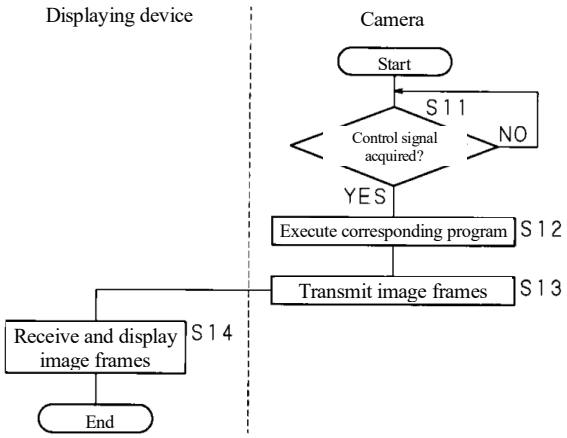
Displaying device
Camera
Start
S11
Control signal acquired?
NO
YES
Execute corresponding program
S12
Transmit image frames
S13
Receive and display image frames
S14
End

[FIG 6]

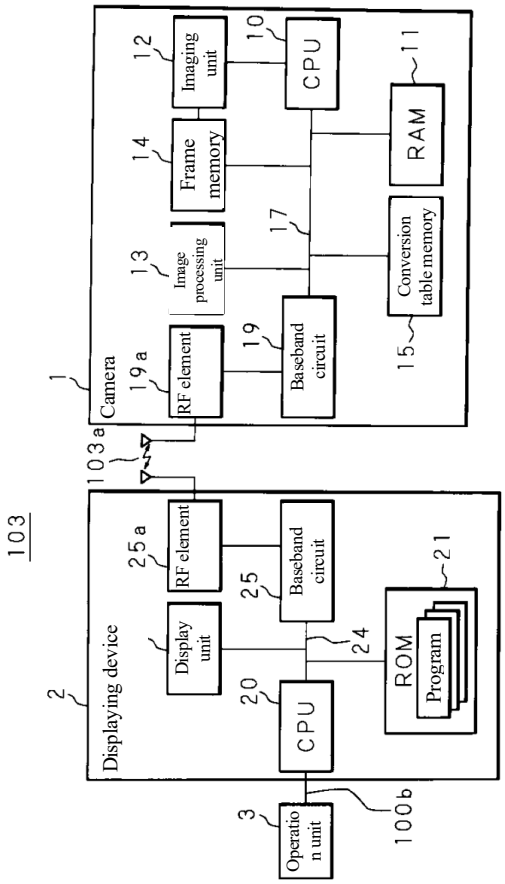
Camera
1
Imaging unit
12
CPU
10
RAM
11
Frame memory
14
Image processing unit
13
17
Conversion table memory
15
RF element
19a
Baseband circuit
19
103a
103
Displaying device
2
RF element
25a
Baseband circuit
25
Display unit
24
ROM
Program
21
CPU
20
Operation unit
3
100b

Continued from front page

(51)Int.Cl.[7]	FI	Theme code (Reference)
	H04N 7/18 J	

CONSORTRA
TRANSLATIONS

100 Park Avenue, 16th Fl
New York, NY 10017
www.consortra.com

STATE of TEXAS)
) ss:
COUNTY of HARRIS)

CERTIFICATE OF ACCURACY

This is to certify that the attached document, "JP2004320567A - Uchino"-- originally written in *Japanese* -- is, to the best of our knowledge and belief, a true, accurate, and complete translation into *English*.

Dated: 7/17/2024

Susannah Smith
Susannah Smith
Project Manager
Consortra Translations

Sworn to and signed before ME
This 17th day of July, 2024

Jeffrey Mamera
Notary Public

JEFFREY MAMERA
Notary Public, State of Texas
Comm. Expires 12-07-2026
Notary ID 134094816

Your legal translation partner

DECLARATION DAVID TAKATA

I, David Takata,

translator to Consortra Translations, declare the following:

1. I am over 18 years of age and competent to make this declaration.
2. I am a qualified Japanese to English translator.
3. I have translated into English the attached document identified as "JP2004320567A – Uchino."
4. I affirm that the translated text has been translated and edited to the best of my ability and knowledge to accurately reflect the content, meaning, and style of the original text. I hereby certify under penalty of perjury under the laws of the United States of America that the foregoing constitutes, pursuant to my knowledge and belief, a true and correct translation of the original document.
5. I declare that all statements made herein of my knowledge are true, and that all statements made on information and belief are believed to be true, and that these statements were made with the knowledge that willful false statements and the like are punishable by fine or imprisonment, or both, under Section 1001 of Title 18 of the United States Code.

Dated July 17, 2024

David Takata

David Takata

For and on behalf of Consortra Translations