US 20040150726A1

(19) United States

(12) Patent Application Publication

(10) Pub. No.: US 2004/0150726 A1

(43) Pub. Date: Aug. 5, 2004

Gallagher

(54) METHOD FOR DETERMINING IMAGE CORRECTION PARAMETERS

(75) Inventor: **Andrew C. Gallagher**, Brockport, NY (US)

Correspondence Address:
Thomas H. Close
Patent Legal Staff
Eastman Kodak Company
343 State Street
Rochester, NY 14650-2201 (US)

(73) Assignee: **Eastman Kodak Company**

(21) Appl. No.: **10/357,597**

(22) Filed: **Feb. 4, 2003**

Publication Classification

(51) **Int. Cl.**[7] **H04N 5/228**

(52) **U.S. Cl.** **348/222.1**

(57) **ABSTRACT**

In order to reduce image degradation due to image capture problems, a method utilizes image data corresponding to a captured image and image capture metadata that refers specifically to information that is associated with capture of the image. A database of correction parameters is provided in order to reduce degradation present in the captured image, whereby each correction parameter is associated with particular image capture metadata. The method involves using the image capture metadata to determine whether the database contains one or more correction parameters associated with that image capture metadata, and then producing correction parameters from the database of correction parameters when the database contains correction parameters associated with the image capture metadata. One or more new correction parameters are produced when the database does not contain correction parameters associated with the image capture metadata. The database then may be updated with the new correction parameters.

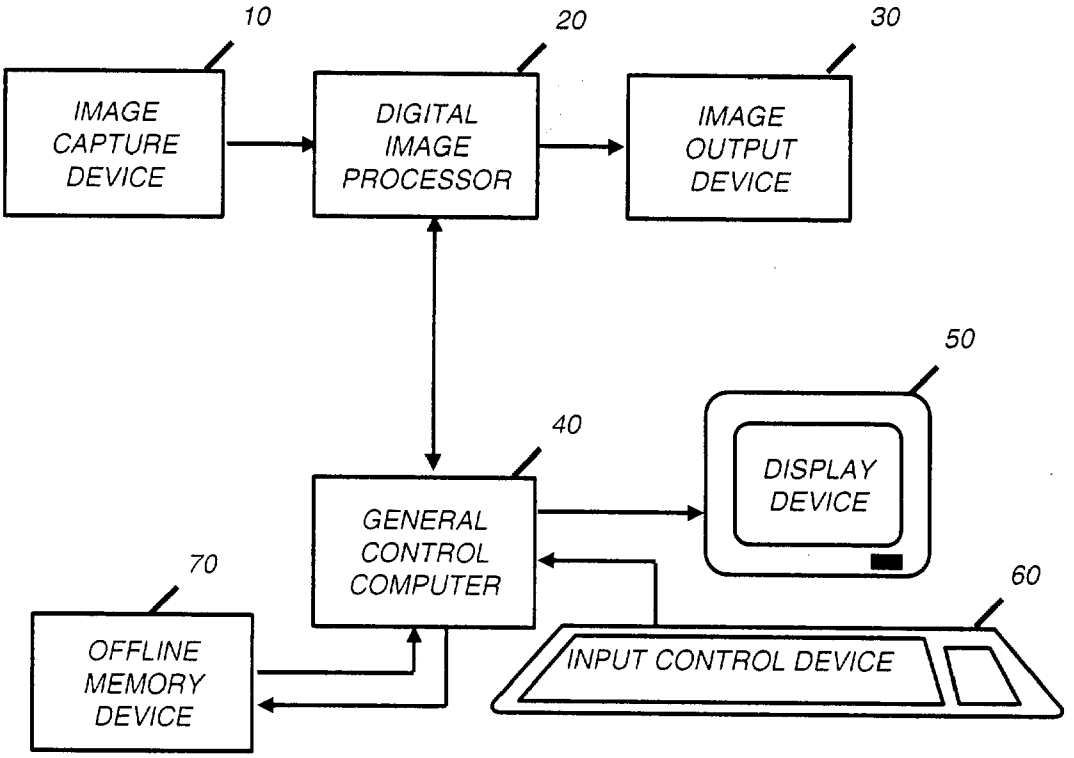

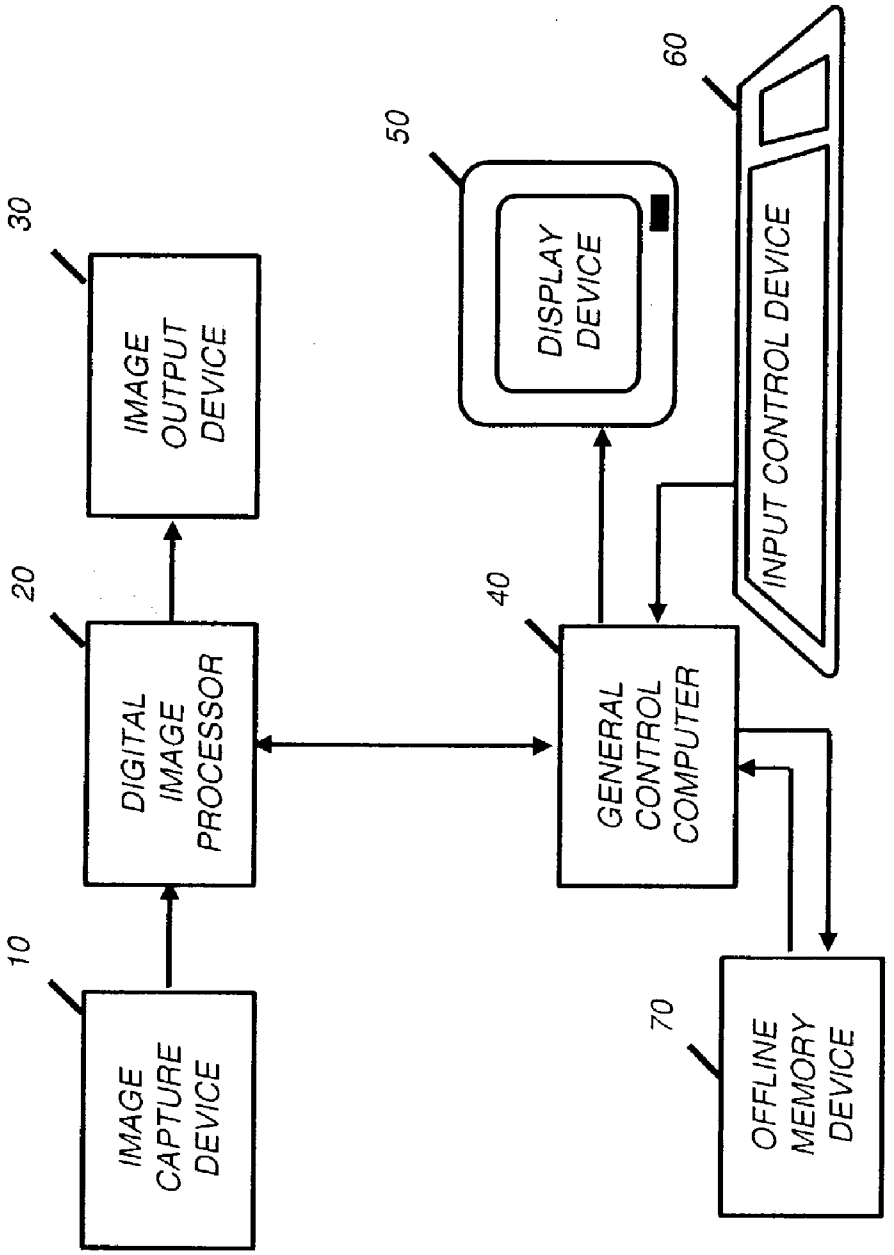
10
IMAGE CAPTURE DEVICE
20
DIGITAL IMAGE PROCESSOR
30
IMAGE OUTPUT DEVICE
40
GENERAL CONTROL COMPUTER
50
DISPLAY DEVICE
60
INPUT CONTROL DEVICE
70
OFFLINE MEMORY DEVICE

FIG. 1

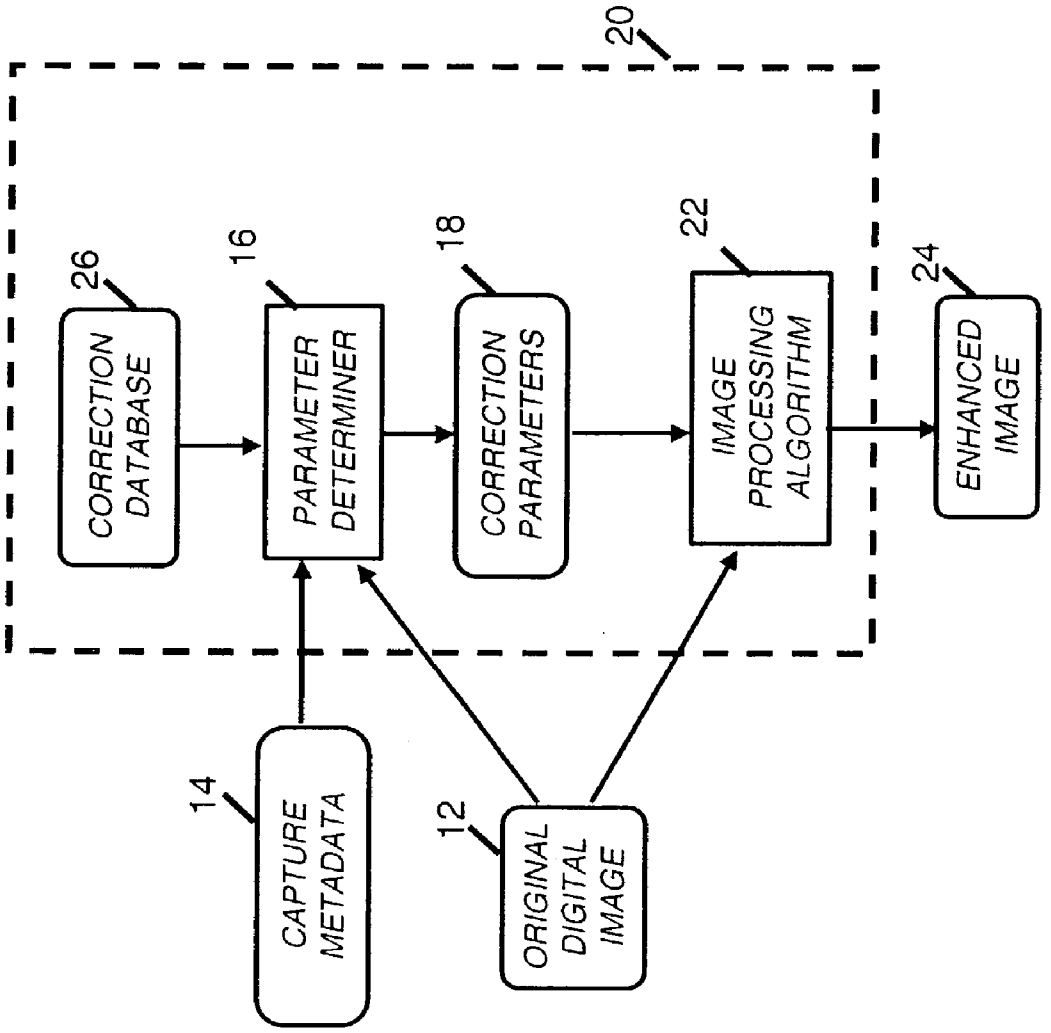
20
26
CORRECTION DATABASE
16
PARAMETER DETERMINER
18
CORRECTION PARAMETERS
22
IMAGE PROCESSING ALGORITHM
24
ENHANCED IMAGE
14
CAPTURE METADATA
12
ORIGINAL DIGITAL IMAGE

FIG. 2

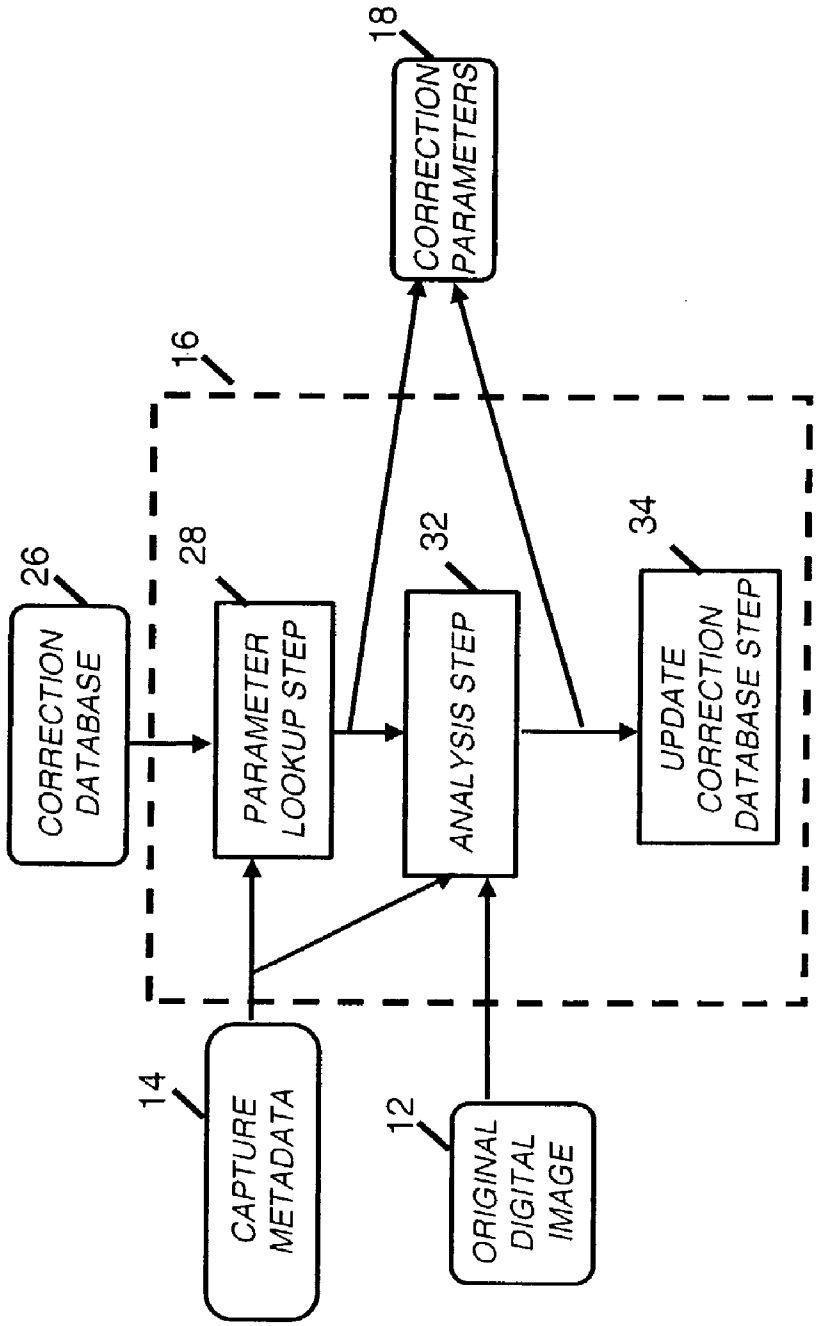
CORRECTION DATABASE
26
PARAMETER LOOKUP STEP
28
16
CAPTURE METADATA
14
ANALYSIS STEP
32
ORIGINAL DIGITAL IMAGE
12
CORRECTION PARAMETERS
18
UPDATE CORRECTION DATABASE STEP
34

FIG. 3

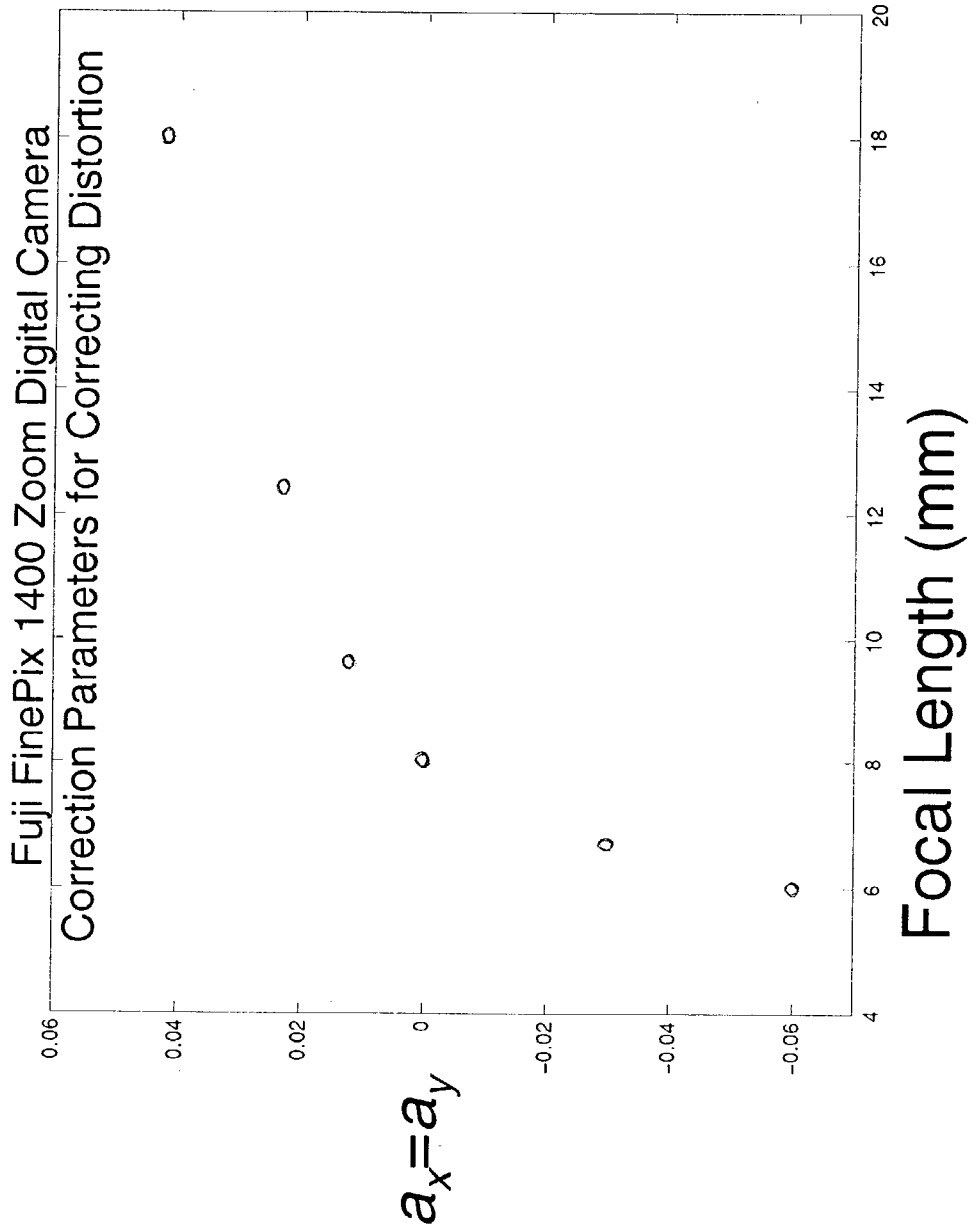
Fuji FinePix 1400 Zoom Digital Camera
Correction Parameters for Correcting Distortion
$a_x=a_y$
0.06
0.04
0.02
0
-0.02
-0.04
-0.06
4
6
8
10
12
14
16
18
20
Focal Length (mm)

FIG. 4

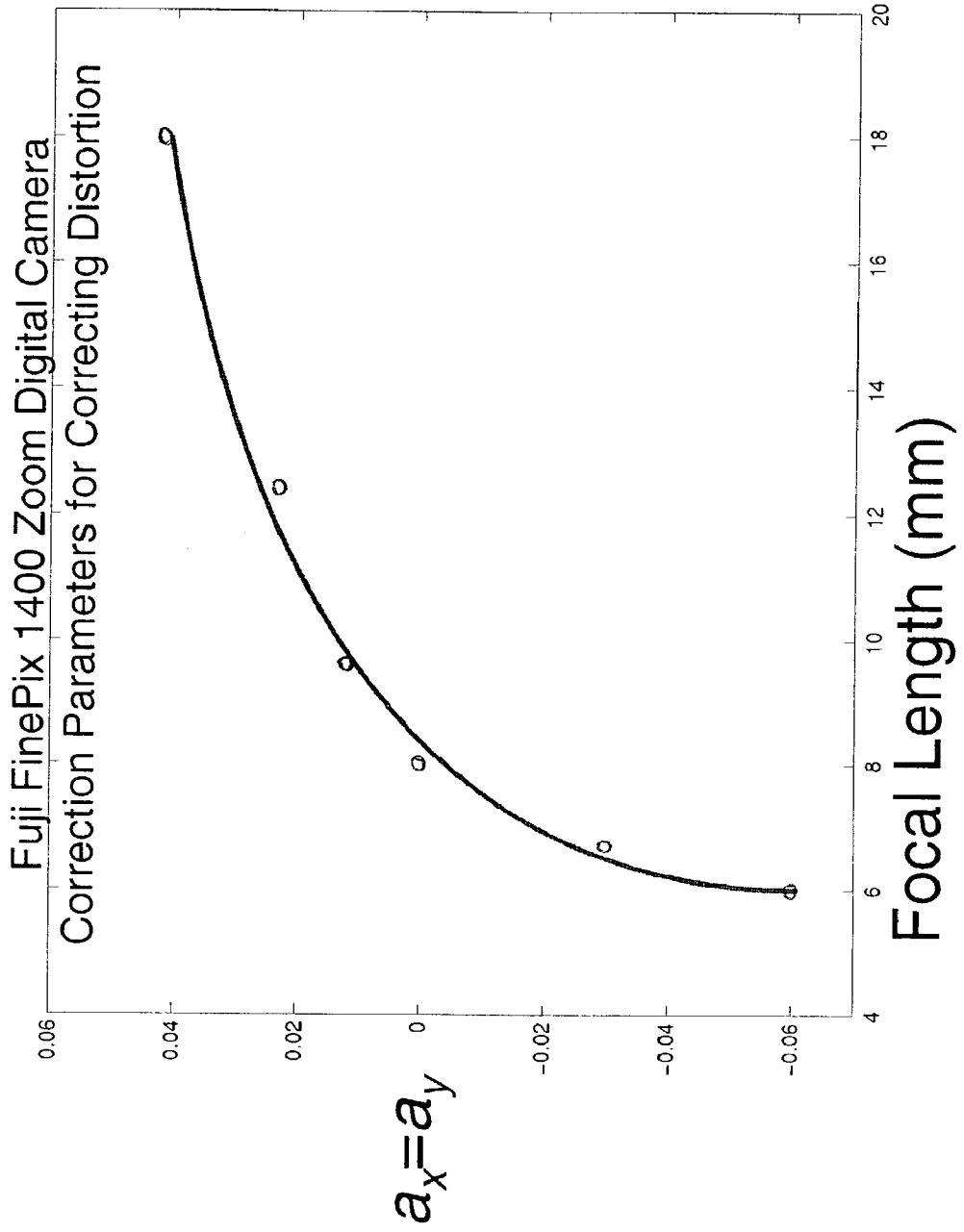
Fuji FinePix 1400 Zoom Digital Camera
Correction Parameters for Correcting Distortion
$a_x = a_y$
0.06
0.04
0.02
0
-0.02
-0.04
-0.06
4
6
8
10
12
14
16
18
20
Focal Length (mm)

FIG. 5

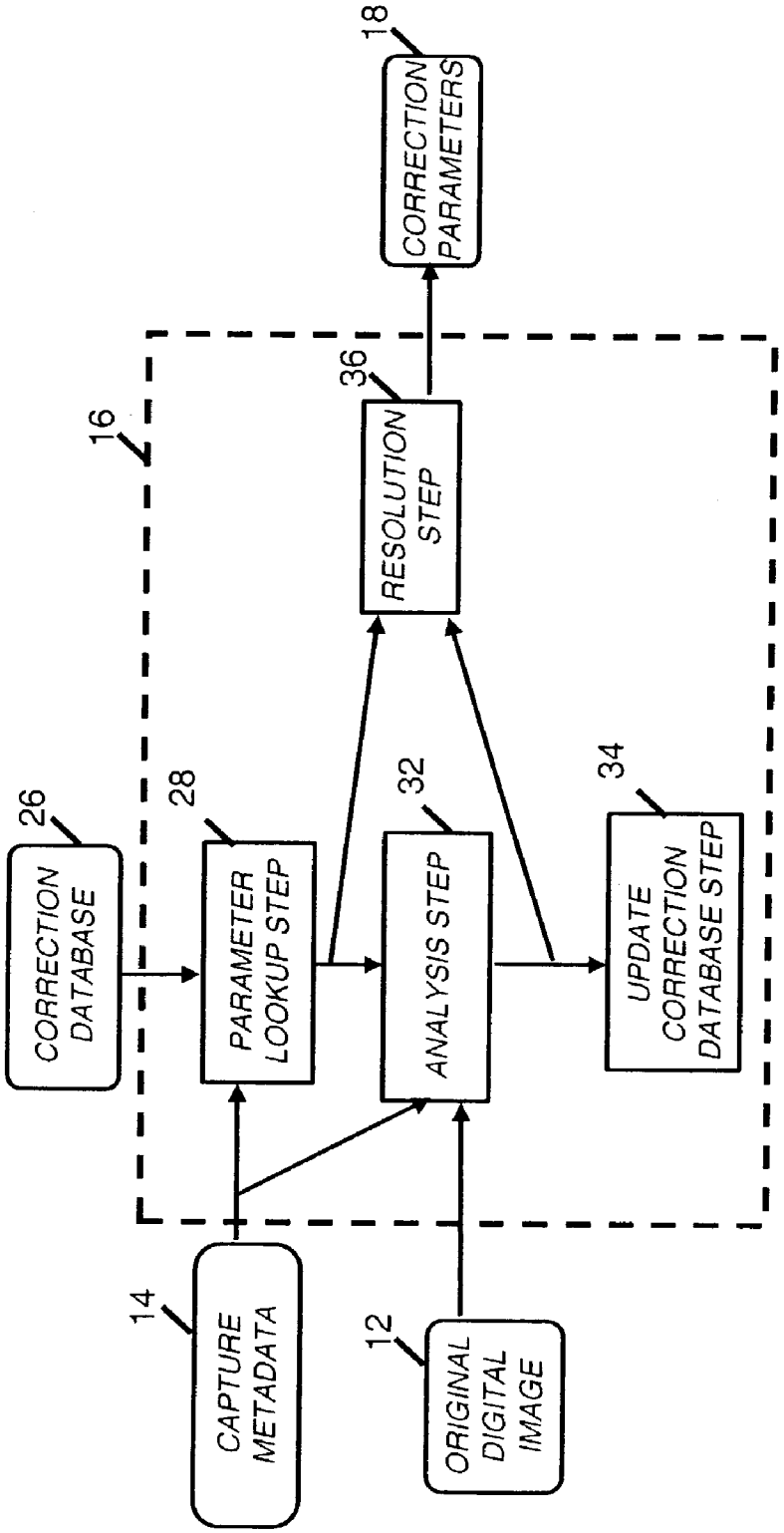
CORRECTION DATABASE
26
PARAMETER LOOKUP STEP
28
CAPTURE METADATA
14
ORIGINAL DIGITAL IMAGE
12
ANALYSIS STEP
32
RESOLUTION STEP
36
16
UPDATE CORRECTION DATABASE STEP
34
CORRECTION PARAMETERS
18

FIG. 6

METHOD FOR DETERMINING IMAGE CORRECTION PARAMETERS

CROSS REFERENCE TO RELATED APPLICATION

[0001] Reference is made to commonly assigned copending application Ser. No. 09/957,013, entitled "System and Method for Detecting When to Correct Image-Specific Defects Based on Camera, Scene, Display and Demographic Data" and filed 20 Sep. 2001 in the names of Richard B. Wheeler and Brian W. Keelan, which is assigned to the assignee of this application.

FIELD OF INVENTION

[0002] The present invention relates to digital image processing, and in particular to digital image processing methods for correcting and reducing image degradation due to deterministic problems related to image capture.

BACKGROUND OF THE INVENTION

[0003] Many digital image processing algorithms are designed to improve the quality of an image by correcting for a deterministic problem in the image path. For example, lenses often produce optical distortion that degrades the quality of the captured image. It is often more economically feasible to correct the degradation with digital image processing rather than through complicated lens design steps. If the degradation is known precisely, then a correction can be made to the image by digitizing the image and applying a correction algorithm using correction parameters. Typically, a given set of correction parameters for a given degradation relate only to a specific lens at a particular setting. For example, a single zoom lens may produce a different level of distortion for each different level of zoom.

[0004] This implies that several possible solutions could be used to correct for the degradations in an image. First consider an imaging system that for each image, associated metadata (non-image information that is associated with an image) is used to determine the correction parameters. For example, if the camera type and focal length were provided as metadata associated with an image, then a database could be used to determine the appropriate correction parameters for the image. The database would contain metadata and correction parameters in pairs. For a practical image processing system, an extensive database of many different camera types would be required to effectively implement a system having the ability to correct for deterministic problems of the image path. Such a database would be difficult to maintain, as new cameras (especially digital cameras) are commonly being introduced to the marketplace. Characterizing the cameras and updating the database is labor-intensive and, as a result, expensive. An additional disadvantage of this method is that if the system encounters an image with metadata not in the database, then that image's quality cannot be improved.

[0005] For example, in U.S. Pat. No. 5,461,440, Toyoda et al. describe a method of writing on film an identification code indicating an amount of degradation produced by the optical system. This identification code is used to determine image quality degradation information that is used to correct for the image quality. This method has the short-comings mentioned above. In U.S. Pat. No. 6,219,446, Kiriki et al. describe a method of extracting correction parameters for an image capture problem (e.g lens distortion) by using exposures of structured target images and analyzing the images of the targets. Unfortunately, not all images contain targets, and it is desirable to be able to correct for the capture problems of images without associated targets.

[0006] Alternatively, consider an image processing system that can determine, via an automatic algorithm, the correction parameters that will produce the best correction for a given image degradation. For example, for the image degradation of lens distortion, the plumb-line method (D. Brown, "Close Range Camera Calibration", *Photogrammetric Engineering*, pp. 855-866, 1971) is an automatic method used to determine appropriate correction parameters for an image or a set of images captured with similar optical conditions (i.e., where the camera manufacturer, focal length, etc. are similar). However, this algorithm and many automatic algorithms are computationally intensive. In addition, the algorithm is applied to determine the correction parameters over and over for the same camera with identical optical conditions (despite the fact that the correction parameters should be constant). Therefore, using an automatic algorithm allows the image processing system to potentially improve the image quality of images from unknown sources, but it is not efficient.

[0007] Thus there exists a need for an efficient method by which digital image processing can be used to correct for deterministic capture problems.

SUMMARY OF THE INVENTION

[0008] The present invention is directed to overcoming one or more of the problems set forth above. Briefly summarized, according to one aspect of the present invention, the invention resides in a method for processing an image to reduce image degradation due to image capture problems, comprising the steps of: (a) providing image data corresponding to a captured image and image capture metadata that refers specifically to information that is associated with capture of the image; (b) providing a database of correction parameters that can be used to reduce degradation present in the captured image, whereby each correction parameter is associated with particular image capture metadata; (c) using the image capture metadata to determine whether the database contains one or more correction parameters associated with the image capture metadata; (d) producing correction parameters from the database of correction parameters when the database contains correction parameters associated with the image capture metadata; and (e) producing one or more new correction parameters from an algorithm when the database does not contain correction parameters associated with the image capture metadata. The database then may be updated with the new correction parameters produced by step (e).

[0009] According to another aspect of the invention, the correction parameters from the database are used to produce a functional fit between the correction parameters in the database and the particular image capture metadata associated with the correction parameters, and then the functional fit is used to provide one or more new correction parameters when the database does not contain correction parameters associated with the image capture metadata.

[0010] According to yet another aspect of the invention, each correction parameter in the database of correction

parameters is associated with particular image capture metadata and with a confidence value. Then, one or more correction parameters are produced from the database of correction parameters when the database contains one or more correction parameters associated with the image capture metadata and the confidence value meets a criteria. Alternatively, one or more improved correction parameters are produced when the database does not contain correction parameters associated with the image capture metadata or if the confidence value does not meet the criteria.

[**0011**] The advantage of the invention is that it provides an efficient method by which digital image processing can be used to correct for deterministic capture problems.

[**0012**] These and other aspects, objects, features and advantages of the present invention will be more clearly understood and appreciated from a review of the following detailed description of the preferred embodiments and appended claims, and by reference to the accompanying drawings.

BRIEF DESCRIPTION OF THE DRAWINGS

[**0013**] **FIG. 1** is a functional block diagram of a computer system suitable for practicing the present invention.

[**0014**] **FIG. 2** is a block diagram of the present invention.

[**0015**] **FIG. 3** is a block diagram of the parameter determiner shown in **FIG. 2**.

[**0016**] **FIG. 4** is a plot of capture metadata and an associated correction parameter.

[**0017**] **FIG. 5** is a plot of capture metadata and an associated correction parameter shown in **FIG. 4**, along with a functional fit of the same.

[**0018**] **FIG. 6** is a block diagram of an alternative embodiment of the parameter determiner shown in **FIG. 2**.

DETAILED DESCRIPTION OF THE INVENTION

[**0019**] In the following description, a preferred embodiment of the present invention will be described as a software program. Those skilled in the art will readily recognize that the equivalent of such software may also be constructed in hardware. Because image manipulation algorithms and systems are well known, the present description will be directed in particular to algorithms and systems forming part of, or cooperating more directly with, the method in accordance with the present invention. Other aspects of such algorithms and systems, and hardware and/or software for producing and otherwise processing the image signals involved therewith, not specifically shown or described herein may be selected from such systems, algorithms, components, and elements known in the art. Given the description as set forth in the following specification, all software implementation thereof is conventional and within the ordinary skill in such arts.

[**0020**] The present invention may be implemented in computer hardware. Referring to **FIG. 1**, the following description relates to a digital imaging system which includes an image capture device **10**, an digital image processor **20**, an image output device **30**, and a general control computer **40**. The system can include a display device **50** such as a computer console or paper printer. The system can also include an input control device **60** for an operator such as a keyboard and or mouse pointer. The present invention can be used with multiple capture devices **10** that produce digital images. For example, **FIG. 1** can represent a digital photofinishing system where the image capture device **10** is a conventional photographic film camera for capturing a scene on color negative or reversal film, and a film scanner device for scanning the developed image on the film and producing a digital image. The digital image processor **20** provides the means for processing the digital images to produce pleasing looking images on the intended output device or media. The present invention can be used with a variety of output devices **30** that can include, but not be limited to, a digital photographic printer and soft copy display. The digital image processor **20** can be used to process digital images to make adjustments for overall brightness, tone scale, image structure, etc. of digital images in a manner such that a pleasing looking image is produced by an image output device **30**. Those skilled in the art will recognize that the present invention is not limited to just these mentioned image processing functions.

[**0021**] The general control computer **40** shown in **FIG. 1** can store the present invention as a computer program stored in a computer readable storage medium, which may comprise, for example: magnetic storage media such as a magnetic disk (such as a floppy disk or a hard drive) or magnetic tape; optical storage media such as an optical disc, optical tape, or machine readable bar code; solid state electronic storage devices such as random access memory (RAM), or read only memory (ROM). The associated computer program implementation of the present invention may also be stored on any other physical device or medium employed to store a computer program indicated by offline memory device **70**. Before describing the present invention, it facilitates understanding to note that the present invention is preferably utilized on any well-known computer system, such as a personal computer. In addition, **FIG. 1** may represent components of a digital camera or a digital photofinishing system.

[**0022**] It should also be noted that the present invention implemented in a combination of software and/or hardware is not limited to devices which are physically connected and/or located within the same physical location. One or more of the devices illustrated in **FIG. 1** may be located remotely and may be connected via a wireless connection.

[**0023**] A digital image i(x,y) is comprised of one or more digital image channels. Each digital image channel is typically comprised of a two-dimensional array of pixels. The digital image i(x,y) contains X rows of pixels and Y columns of pixels. Each pixel value relates to the amount of light received by the imaging capture device corresponding to the physical region of a pixel. For color imaging applications, a digital image will often comprise red, green, and blue digital image channels. For monochrome applications, the digital image will only contain one digital image channel. Motion imaging applications can be thought of as a sequence of digital images. Those skilled in the art will recognize that the present invention can be applied to, but not be limited to, a digital image channel for any of the above mentioned applications. Although a digital image channel is described as a two dimensional array of pixel values arranged by rows and columns, those skilled in the art will recognize that the

present invention can be applied to mosaic (non rectilinear) arrays with equal effect. Those skilled in the art will also recognize that describing a digital image processing step hereinbelow as "replacing original pixel values with processed pixel values" is functionally equivalent to describing the same processing step as "generating a new digital image with the processed pixel values while retaining the original pixel values".

[**0024**] The preferred embodiment of the present invention is described with reference to **FIG. 2**, where image data from a digital image **12** has image capture metadata **14** that refers specifically to information that is associated with capture of the image. The source of the digital image **12** may be from a digital camera, a scan of a photographic film, or a scan of a print, as well as any of a number of different sources as known by those skilled in the art of image processing.

[**0025**] Metadata refers to non-image data that is associated with an image. Metadata may refer to information such as camera manufacturer, camera model number, information indicating whether the camera flash was fired, the lens focal length, the time of day the image was captured, the geographic location of the image, the desired size of a print of the image, and any number of other descriptors. Capture metadata **14** is a subset of metadata that refers specifically to information associated with the capture of the image. For example, the camera manufacturer, lens focal length, aperture value, flag indicating whether the flash was fired, and lens focus position are all examples of capture metadata **14**. Capture metadata **14** is any metadata that might vary depending on the camera or camera settings used to capture a specific image. Thus, focal length is capture metadata **14** but geographic location of the image is not. Capture metadata **14** is often recorded at the time the image is captured by the camera. It is common to record metadata directly on the film used with a film camera. For example, many cameras are available that can record metadata to a magnetic layer on the film itself (e.g., Advanced Photo System (APS) cameras can record metadata to a magnetic layer in APS film). With digital cameras, it is common for the camera to record metadata in the digital image file itself. For example, metadata is often recorded in the EXIF file header of a JPEG image. Capture metadata **14** could also be associated with the image manually by a human. For example, a photographer can record with a notepad and pencil the focal length and shutter speed that was used to expose a 35 mm negative. Later, when the processed 35 mm negative has been developed and scanned to form a digital image, the photographer could associate the recorded capture metadata **14** with the digital image **12** using a computer.

[**0026**] The capture metadata **14** is input to a parameter determiner **16**. The purpose of the parameter determiner **16** is to find correction parameters **18** that can be used by an image processing algorithm **22** to remove or reduce degradation present in the digital image. The correction parameters **18** output from the parameter determiner **16** are input to the image processing algorithm **22** along with image data from the digital image **12**. The digital image **12** is then processed by the image processing algorithm **22** according to the correction parameters **18** to reduce or remove the degradation from the digital image **12**, producing an enhanced digital image **24**. The parameter determiner **16**, correction parameters **18**, and image processing algorithm **22** will be described in greater detail hereinbelow.

[**0027**] The parameter determiner **16** finds correction parameters **18** that can be used by an image processing algorithm **22** to correct for an image capture degradation, such as lens falloff (sometimes called marginal attenuation), lens distortion, and lateral color aberration, or defocus. An image capture degradation is a result of a non-ideal image capture system and reduces the quality of the resulting image. The correction parameters **18** are values that relate to the specific magnitude or character of a given image capture degradation, instructing the image processing algorithm **22** to achieve an appropriate correction in the enhanced digital image **24**. Preferably, the correction parameters **18** are values that are input to the image processing algorithm **22**. Alternatively, the correction parameters **18** can directly describe the image capture degradation. For example, the correction parameters **18** could be a percent distortion when the image processing algorithm **22** corrects lens distortion. When the image processing algorithm **22** corrects for defocus, the correction parameters **18** could be the coefficients of a digital filter.

[**0028**] **FIG. 3** shows the parameter determiner **16** in more detail. The parameter determiner **16** inputs a correction database **26**, containing capture metadata **14** and associated correction parameters **18** in pairs. The association of the capture metadata **14** and the correction parameters **18** could take the form of a look-up-table, an equation (functional relationship) or a set of equations, as will be described in detail hereinbelow. In a parameter lookup step **28**, the correction database **26** is searched (via computer with a search algorithm commonly known in the art) for capture metadata **14** matching the capture metadata **14** associated with the digital image. In the event that the capture metadata **14** match is found in the correction database **26**, the parameter lookup step **28** outputs the associated correction parameters **18**. If the capture metadata **14** is not located in the correction database **26**, then the correction parameters **18** are determined with an analysis step **32**, which will be described in greater detail below. The analysis step **32** determines the correction parameters **18**, which are input to the image processing algorithm **22** of **FIG. 2**; in addition, an update correction database step **34** is used to update the correction database **26** with the capture metadata **14** and the associated correction parameters **18**. The next time a digital image **12** is processed with the same capture metadata **14**, the correction parameters **18** can be found with the speedier and more efficient parameter lookup step **28** (rather than repeating the analysis step **32**).

[**0029**] When searching the correction database **26** for capture metadata matching that of the digital image **12**, the metadata must match only for those items of capture metadata specified within the correction database **26** associated with the particular set of correction parameters **18**. For example, the correction database may include the following:

Database Table
Fuji FinePix 1400 Zoom Digital Camera

Focal Length (mm):	Correction Parameter $a_x = a_y$
60/10	−0.06
67/10	−0.03
80/10	0
96/10	0.012
180/10	0.042

[0030] In the correction database, negative correction parameter values correct for barrel distortion and positive correction parameter values correct for pincushion distortion. A correction parameter of 0 indicates that there is a negligible amount of distortion.

[0031] If, referring for example to the values in the Database Table, a digital image **12** has associated capture metadata, as follows: Fuji FinePix 1400 Zoom Digital Camera, Focal Length 80/10, F Number 36/10, then the parameter determiner **16** matches the image's associated capture metadata within the correction database **26**, and outputs a correction parameter $a_x=a_y=0$. The fact that the image's associated capture metadata **14** had an item (F Number) that was not specified in the correction database does not preclude a capture metadata match; rather, it indicates that the correction parameters **18** are independent of the omitted capture metadata item. Preferably, the parameter lookup step **28** requires an exact match between the image's capture metadata and the capture metadata in the correction database to output the associated correction parameters **18**. Alternatively, the lookup step **28** can also output correction parameters **18** when there is a near-match between capture metadata **14** in the correction database **26** and capture metadata associated with the image **12**. For example, a near match can occur when every item of the image's capture metadata is within 10% of that of a set of correction parameters in the correction database **26**.

[0032] The data represented in the correction database **26** may be in any form. Preferably the data in the correction database **26** is stored as ASCII text. Commercial database packages are widely available. The tasks of performing a search of a database and modifying or adding data to a database are common, and are preferably performed with the ANSI standard SQL (Structured Query Language).

[0033] The analysis step **32** is used to determine the correction parameters **18** when the correction parameters **18** are not located by the lookup step **28**. The analysis step **32** can be a human operator who manually determines the correction parameters **18** using a graphical user interface to view enhanced digital images **24** produced by different proposed correction parameters. The human operator determines the correction parameters **18** by selecting the proposed correction parameters producing the most pleasing enhanced digital image. The correction parameters **18** are then written to the correction database **26** along with the capture metadata **14** in an update correction database step **34**.

[0034] Preferably, the analysis step **32** applies an automatic algorithm in order to determine the optimal correction parameters **18**. For example, in the case where the capture degradation is lens distortion, several authors have described methods of determining the distortion parameters from natural scenes that are automatic or semi-automatic. As previously described, such parametric description of an image capture degradation is equivalent to the correction parameters of the present invention, because either can be used by an image processing algorithm to correct the degradation. In U.S. Pat. No. 6,101,288, Kang described a method of determining correction parameters by requiring a user to manually select arbitrary lines in the image. Devernay and Faugeras describe a fully automatic method of determining the distortion parameters from a digital image of a structured environment in their article, "Automatic Calibration and Removal of Distortion from Scenes of Structured Environments", *SPIE Conference Proceedings*, July 1995, pp. 62-72. In their method, image edges are detected and linked to form line segments. These line segments correspond to lines in the original scene that because of lens distortion may be slightly curved in the digital image. The distortion error relates to an overall measure of curvature of the detected line segments. The distortion error is zero if the detected line segment is exactly straight, and increases with line segment curvature. The distortion parameters are determined by finding those parameters that minimize the distortion error. In other words, the optimal correction parameters for distortion correction are those parameters that when the digital image is processed with the image processing algorithm, the resulting enhanced digital image line segments have the minimum distortion error (the detected line segments are maximally straight.) Their algorithm is based on earlier work by Brown, described in "Close Range Camera Calibration", *Photogrammetric Engineering*, pp. 855-866, 1971.

[0035] Those skilled in the art will recognize that the parameter determiner **16** of **FIG. 2** (and the contained analysis step **32**) must be coordinated with the image processing algorithm **22**. The action of the image processing algorithm **22** is controlled by the correction parameters **18**. The parameter determiner **16** must be coordinated with the image processing algorithm **22** so the correction parameters **18** correct for the capture degradations in the digital image **12**.

[0036] Those skilled in the art will also recognize that the analysis step **32** of **FIG. 3** may simultaneously consider more than one digital image (as long as the appropriate capture metadata **14** is similar, preferably within 10%) in order to improve the determination of the correction parameters **18**. In the example above where the parameter determiner **16** finds parameters for the distortion, many digital images from a single camera may be considered with the analysis algorithm described by Deverney et al. to determine the correction parameters **18**. The many digital images preferably all have identical focal lengths.

[0037] As shown in **FIG. 2**, an enhanced digital image o(m,n) **24** is output from the image processing algorithm **22**. If the image processing algorithm **22** corrects for distortion, the enhanced digital image **24** is created by the image processing algorithm **22** as follows:

[0038] Preferably, the enhanced digital image o(m,n) **24** has the same number of rows and columns as the input digital image i(x,y) **12**. In other words, M=X and N=Y. Each

pixel location in the enhanced digital image $o(m_o, n_o)$ **24** is mapped back to a specific location in the input digital image $i(x_o,y_o)$ **12**. Typically, (x_o,y_o) will not correspond to an exact integer location, but will fall between pixels on the input digital image i(x,y) **12**. The value of the pixel $o(m_o,n_o)$ is determined by interpolating the value from the pixel values nearby $i(x_o,y_o)$. This type of interpolation is well known in the art of image processing and can be accomplished by nearest neighbor interpolation, bilinear interpolation, bicubic interpolation, or any number of other interpolation methods. For example, U.S. Pat. No. 5,671,297 describes one such interpolation method for use with distortion compensation. If the location (x,y) falls outside of the range of the image i(x,y) (i.e., if $x_o<-X/2$ or $x_o>X/2$ or $y_o<-Y/2$ or $y_o>Y/2$), then the value of $o(m_o,n_o)$ is set equal to a default value such as 0 or 255, or the value of $o(m_o,n_o)$ is set equal to the value of the nearest pixel of i(x,y).

[0039] A distortion model governs the mapping of locations (m,n) of the enhanced digital image **24** to locations (x,y) of the input image **12** by the image processing algorithm **22**. In the preferred embodiment the distortion model, which maps a specific location (m_o,n_o) of the enhanced digital image **24** to a location (x_o,y_o) in the input image **12** is given as:

$$x_o = \left(m_o + \frac{ca_x m_o}{z \cdot z_x}\left[\left(\frac{m_o}{z \cdot z_x}\right)^2 + \left(\frac{n_o}{z \cdot z_y}\right)^2\right]\right)d$$

$$y_o = \left(n_o + \frac{ca_y n_o}{z \cdot z_y}\left[\left(\frac{m_o}{z \cdot z_x}\right)^2 + \left(\frac{n_o}{z \cdot z_y}\right)^2\right]\right)d$$

[0040] where:

[0041] c=the channel specific zoom factor used to correct for lateral chromatic aberration. For example, c=0.997, 1.0, 1.004 for the red, green, and blue digital image channels, respectively. Default is 1.0.

[0042] a_x=the distortion parameter for the long dimension of the image.

[0043] a_y=the distortion parameter for the short dimension of the image.

[0044] For cameras with a radially symmetric optical system, $a_x=a_y$. The optimal values of a_x and a_y depend on the capture metadata. For example, referring to Table I, for a Fuji FinePix 1400 Zoom Digital Camera with a focal length of 180/10, optimal $a_x=a_y=0.042$.

[0045] z=an overall zoom factor designed to ensure that location (x_o, y_o) falls within the limits of the image. Default is 1.0.

[0046] z_x=a zoom factor for the long dimension of the image. Default is 1.0. This zoom factor can be used to correct an incorrect image aspect ratio.

[0047] z_y=a zoom factor for the short dimension of the image. Default is 1.0. This zoom factor can be used to correct an incorrect image aspect ratio.

[0048] d=the normalization quantity.

$$d = \frac{\sqrt{X^2 + Y^2}}{2}$$

[0049] The parameters c, a_x, a_y, z, z_x, and z_y are distortion correction parameters **18**. The distortion model represents a non-symmetric distortion model any time that $a_x \neq a_y$ (such as represents the distortion of a camera having a cylindrical imaging surface, e.g., as with a single-use camera). The described distortion model is a 3rd order polynomial that provides an excellent non-symmetric distortion correction, but higher order terms could also be included.

[0050] If $a_x=a_y$, then the distortion model is radially symmetric. Assuming default values for c, z, z_x, and z_y, the distortion model requires only two parameter values (a_x and a_y) to correct for the nonsymmetrical distortion found in cameras with cylindrical image surfaces. If the cylindrical image surface accurately follows the focal surface of the image system, then the distortion along the long dimension of the image may be negligible and $a_x=0$, requiring specification only of a_y.

[0051] After the analysis step **32**, the database **26** is updated with an update correction database step **34**. There are preferably two aspects of the update correction database step **34**.

[0052] In the first aspect, the database **26** is updated by adding to it the determined correction parameters **18** with the associated capture metadata **14**. For example, suppose the correction database **26** includes the values found in the Database Table, as follows:

Database Table
Fuji FinePix 1400 Zoom Digital Camera

Focal Length (mm):	Correction Parameter $a_x = a_y$
60/10	−0.06
67/10	−0.03
80/10	0
96/10	0.012
180/10	0.042

[0053] Although in this example as shown in the Database Table, only one correction parameter (i.e., $a_x=a_y$) is associated with each entry of capture metadata **14** (i.e., camera type and focal length), it will often be useful to use more than one correction parameter associated with each entry of capture metadata **14**.

[0054] Suppose further that a digital image **12** and associated capture metadata **14** is input to the present embodiment of the invention for correction of capture degradation. For example, let the associated capture metadata **14** be: Camera: Fuji FinePix 1400 Zoom Digital Camera. Focal Length: 124/10. The parameter determiner **16** first searches the correction database **26** for a match with the capture metadata **14**, but no match for the camera and focal length combination is found. Using the automatic analysis step **32**, the correction parameters **18** are found to be $a_x=a_y=0.023$.

After the step of updating the correction database **34**, the database **26** then includes the information, as follows:

Database Table (updated)
Fuji FinePix 1400 Zoom Digital Camera

Focal Length (mm):	Correction Parameter $a_x = a_y$
60/10	−0.06
67/10	−0.03
80/10	0
96/10	0.012
124/10	0.023
180/10	0.042

[0055] The second aspect of the update correction database step **34** is based on the observation that the optimal correction parameters **18** for a given capture degradation tend to vary slowly with respect to small changes in the capture metadata **14**. For example, **FIG. 4** shows a plot of pairs of correction parameters a_x and capture metadata **14** (focal length for the Fuji FinePix 1400 Zoom Digital Camera.) Thus, the second aspect of the update correction database is to determine a functional fit between the correction parameters **18** and the capture metadata **14** of **FIG. 3**. Once the functional fit is determined for a particular camera, the correction parameters **18** can be determined by the parameter determiner **16** without using the analysis step **32**, thereby saving time. Fitting a function to data is well known by those skilled in the art. Further detail about such fitting techniques can be obtained from numerous references known to those of skill in the art, such as *Practical Methods of Optimization,* 2nd edition, by R. Fletcher, John Wiley & Sons, Ltd.: 1987. For the example shown in **FIG. 4, a** good functional fit is achieved by:

$$a_x = -0.000528(10f-60)+0.0151\sqrt{10f-60}-0.0611$$

[0056] as shown in **FIG. 5**.

[0057] This functional fit is added to the database **26** and associated with the capture metadata **14** of the camera model (i.e. Fuji FinePix 1400 Zoom Digital Camera, Focal Length: 60/10 to 180/10). Suppose that a digital image having associated capture metadata of: Fuji FinePix 1400 Zoom Digital Camera, Focal Length: 150/10 is input to the present embodiment of the invention. The functional fit equation (EQ. 3) is then retrieved from the database **26** by the parameter determiner **16** and evaluated, yielding a correction parameter a_x=0.035. Preferably, the functional fit is determined for a specific camera when correction parameters **18** are known for at least 4 different capture metadata **14**.

[0058] The parameter determiner **16** may have the choice of either finding the correction parameters **18** with a lookup from the correction database **26**, or calculating the correction parameter from a functional fit from the correction database **26**. Preferably, the parameter determiner **16** uses the functional fit to determine the correction parameters **18**.

[0059] In an alternate embodiment illustrated in **FIG. 6, a** confidence value is associated with each correction parameter and capture metadata pair in the correction database **26**. In addition, a confidence value is associated with each functional fit and associated capture metadata **14** in the correction database. The confidence value is output from the analysis step **32** or from the optimization routine used to perform the functional fit in the update correction database step **34**. The confidence value may be the negative of residual distortion error from an automatic algorithm, or the number of images that were used to determine the correction parameter. For example, the correction database **26** may contain the following information:

Database Table (with confidence values)
Fuji FinePix 1400 Zoom Digital Camera

Focal Length (mm):	Correction Parameter $a_x = a_y$	Confidence
60/10	−0.06	−13.1
67/10	−0.03	−32.4
80/10	0	−20.0
96/10	0.012	−5.4
120/10	0.023	−1.8
180/10	0.042	−3.3

[0060] Where greater confidence values indicate higher confidence that the correction parameter(s) is reliable. In this embodiment, the parameter determiner **16** may use a threshold value T_1 (or some other criteria) on the confidence value to decide whether to use the correction parameters **18** associated with the capture metadata **14**, or to perform the analysis step **32**. Even if correction parameters **18** associated with the capture metadata **14** are present in the correction database **26**, if the associated confidence value does not exceed the threshold value T_1 then the analysis step **32** is used to determine the correction parameters **18**. A resolution step **36** then resolves the difference between the correction parameters determined from the analysis step **32** and the correction parameters found with the parameter lookup step **28**. Such resolution is accomplished with an averaging, for instance with a weighted average based on the associated confidence values of the correction parameters from the parameter lookup step **28** and the analysis step **32**. Weighted averages are well known in the art. The result of the resolution step is a set of resolved correction parameters **18**. The update database step **34** then involves updating the correction parameters **18** already in the correction database **26**. Likewise, a new functional fit can be calculated, according to the newly **10** determined correction parameters and the associated capture metadata **14**. The functional fit process can also use the confidence values in the optimization procedure, forcing the functional fit to more closely match data points (correction parameters **18** and associated capture metadata **14**) having higher confidence values. In addition, the confidence value is updated. This embodiment allows for the correction parameters **18** to improve over time by combining correction parameters **18** from many analysis step **32** results. While this embodiment has been described with greater confidence values indicating a higher confidence, those skilled in the art will recognize that lower confidence values could be used to indicate higher confidences as long as the criteria is adjusted accordingly.

[0061] In another example, the image processing algorithm **22** of **FIG. 2** can correct for light falloff. Light falloff is exhibited by the fact that lenses produce non-uniform exposure at the focal plane when imaging a uniformly illuminated surface. When modeled as a thin lens, the ratio of the intensity of the light of the image at any point is

described as $\cos^4$ of the angle between the optical axis, the lens, and the point in the image plane. Photographically, this light falloff generally causes the corners of an image to be darker than desired. In some situations, such as when photographing with a one-time-use camera, the exposure at the corner of the image may be less than half the exposure at the center of the image when photographing a uniformly illuminated surface.

[0062] Using an image processing algorithm to remove the light falloff from a digital image is known in the art of image processing and is described in U.S. Pat. No. 5,461,440. The correction is dependent on the relationship between the values of the pixels of the digital image and the exposure of the original scene. Assuming that the pixel values are linearly related to scene exposures, the correction for light falloff can be accomplished by multiplying each pixel value by a factor. If it is assumed that the $\cos^4$ thin lens light falloff is to be corrected, then the factor is related to the $\cos^4$ of the angle between the optical axis, the lens, and the point in the image plane, as shown in the following equation:

$$o(x, y) = i(x, y)\left[\cos^{-4}\left(\tan^{-1}\left(\frac{d}{f}\right)\right)\right]$$

[0063] where:

[0064] i(x,y) is the original digital image **12**,

[0065] o(x,y) is the enhanced digital image **24** output from the image processing algorithm **22**.

[0066] d is the distance between the $(xy)^{th}$ pixel position to the center of the image, measured in pixels.

[0067] f is the correction parameter **18** which is related to focal length in the thin lens model of light falloff, measured in pixels.

[0068] Preferably, the pixel values of the digital image are proportional to the logarithm of the scene exposures. As a result the image processing algorithm accomplishes the correction for light falloff by adding a constant to each pixel value of the digital image. Then, the following equation describes the image processing algorithm for the preferred case where the pixel values are proportional with the logarithm of scene exposure:

$$o(x, y) = i(x, y) + 4cvs\log\left[\cos\left(\tan^{-1}\left(\frac{d}{f}\right)\right)\right]$$

[0069] where cvs is the number of code values per stop (doubling) of exposure. Preferably, cvs=188. All other variables have previously been defined. Note that the model focal length may actually differ from the actual focal length of the camera used to capture the digital image because the model focal length is that value of f that best accounts for the light falloff in the digital image, using the $\cos^4$ falloff model from the thin lens assumption. Thus, the model focal length may vary from the camera focal length because real lenses deviate from the thin lens, and various factors, such as vignetting are not considered in the $\cos^4$ falloff model. In addition, the model focal length f is defined in units of pixels, while capture metadata **14** information typically records the focal length in units of millimeters. Converting between pixels and millimeters is difficult unless the physical size (in millimeters, for example) and the resolution (in pixels) of the image sensor is known. Thus, the correction database **26** relates the focal length of the camera (which is capture metadata **14**) to the optimal correction parameter f.

[0070] As before, the correction database **26** stores capture metadata and associated correction parameters **18**. As shown in **FIG. 3**, if the parameter lookup step **28** determines that the correction database **26** does not contain correction parameters for the capture metadata of any particular digital image, then the analysis step **32** determines the correction parameters **18**. An automatic method of determining the correcting parameters **18** to correct for light falloff is described in commonly-assigned copending application Ser. No. 09/626,882, entitled "A Method of and System for Automatically Determining a Level of Light Falloff in an Image" and filed 27 Jul. 2000 in the name of Andrew C. Gallagher, which is assigned to the assignee of this application and incorporated herein by reference.

[0071] As has been described herein, the parameter determiner **16** finds correction parameters **18** that can be used by an image processing algorithm **22** to reduce and/or correct for an image capture degradation, such as lens falloff, lens distortion, and lateral color aberration, or defocus. In addition, image correction parameters can be used by an appropriate image processing algorithm to reduce and/or correct for image sharpness, contrast and color, so long as the corrections are constant for all images having common image capture metadata (e.g., for each camera) and the correction parameters can be determined by an automatic algorithm.

[0072] The invention has been described in detail with particular reference to certain preferred embodiments thereof, but it will be understood that variations and modifications can be effected within the spirit and scope of the invention.

PARTS LIST

[0073] **10** image capture device

[0074] **12** original digital image

[0075] **14** capture metadata

[0076] **16** parameter determiner

[0077] **18** correction parameters

[0078] **20** digital image processor

[0079] **22** image processing algorithm

[0080] **24** enhanced image

[0081] **26** correction database

[0082] **28** parameter lookup step

[0083] **30** image output device

[0084] **32** analysis step

[0085] **34** update correction database step

[0086] **36** resolution step

[0087] **40** general control computer

[0088] **41** display device

[0089] **42** input control device

[0090] **50** display device

[0091] **60** input control device

[0092] **70** offline memory device

What is claimed is:

1. A method of processing an image to reduce image degradation due to image capture problems, comprising the steps of:

(a) providing image data corresponding to a captured image and image capture metadata that refers specifically to information that is associated with capture of the image;

(b) providing a database of correction parameters that can be used to reduce degradation present in the captured image, whereby each correction parameter is associated with particular image capture metadata;

(c) using the image capture metadata to determine whether the database contains one or more correction parameters associated with the image capture metadata;

(d) producing correction parameters from the database of correction parameters when the database contains correction parameters associated with the image capture metadata; and

(e) producing one or more new correction parameters from an algorithm when the database does not contain correction parameters associated with the image capture metadata.

2. The method as claimed in claim 1 wherein the database is updated with the new correction parameters produced by step (e), thereby producing one or more updated correction parameters in the database.

3. The method as claimed in claim 2 wherein updated correction parameters are produced in step (d) when image capture metadata is subsequently provided in step (a) that specifically refers to the image capture metadata that was previously used in step (e) to produce the updated correction parameters.

4. The method as claimed in claim 1 wherein step (d) produces correction parameters when there is a predetermined near match between the image capture metadata and the correction parameters associated with particular image capture metadata in the database.

5. The method as claimed in claim 1 further comprising the steps of:

(f) providing the correction parameters produced in either step

(e) or step (f) to an image processing algorithm; and

(g) using the image processing algorithm with the provided correction parameters to reduce the image degradation.

6. The method as claimed in claim 5 wherein the capture problem is a lens degradation, the image capture metadata is indicative of the degradation, and the algorithm corrects for the degradation.

7. The method as claimed in claim 5 wherein the capture problem is a light falloff, the image capture metadata is indicative of the light falloff, and the algorithm corrects for the light falloff.

8. The method as claimed in claim 5 wherein the capture problem is a lens distortion, the image capture metadata is indicative of the lens distortion, and the algorithm corrects for the lens distortion.

9. The method as claimed in claim 1 wherein image data for one or more additional images are provided in step (a) and wherein the algorithm used in step (e) additionally processes one or more of the additional images in order to produce the correction parameter for the image.

10. A computer storage medium having instructions stored therein for causing a computer to perform the method of claim 1.

11. A method of processing an image to reduce image degradation due to image capture problems, comprising the steps of:

(a) providing image data corresponding to a captured image and image capture metadata that refers specifically to information that is associated with capture of the image;

(b) providing a database of correction parameters that can be used to reduce degradation present in the captured image, whereby each correction parameter is associated with particular image capture metadata;

(c) using the image capture metadata to determine whether the database contains one or more correction parameters associated with the image capture metadata;

(d) producing correction parameters from the database of correction parameters when the database contains correction parameters associated with the image capture metadata; and

(e) using the correction parameters from the database to produce a functional fit between the correction parameters in the database and the particular image capture metadata associated with the correction parameters, and then using the functional fit to provide one or more new correction parameters when the database does not contain correction parameters associated with the image capture metadata.

12. The method as claimed in claim 11 wherein the database is updated with the new correction parameters provided by step (e), thereby producing one or more updated correction parameters in the database.

13. The method as claimed in claim 11 wherein the database is updated with the functional fit produced by step (e), thereby enabling the production of one or more new correction parameters without having to recalculate the functional fit.

14. A computer storage medium having instructions stored therein for causing a computer to perform the method of claim 11.

15. A method of processing an image to reduce image degradation due to image capture problems, comprising the steps of:

(a) providing image data corresponding to a captured image and image capture metadata that refers specifically to information that is associated with capture of the image;

(b) providing a database of correction parameters that can be used to reduce degradation present in the captured image, whereby each correction parameter is associated with particular image capture metadata and with a confidence value;

(c) using the image capture metadata to determine whether the database contains one or more correction parameters associated with the image capture metadata;

(d) producing one or more correction parameters from the database of correction parameters when the database contains one or more correction parameters associated with the image capture metadata and the confidence value meets a criteria; and

(e) producing one or more improved correction parameters when the database does not contain correction parameters associated with the image capture metadata or if the confidence value does not meet the criteria.

16. The method as claimed in claim 15, when step (e) produces one or more improved correction parameters because the correction parameters in the database did not meet the criteria for the confidence value, said method further comprising the steps of:

(f) resolving the difference between the improved correction parameters and the correction parameters in the database, thereby providing one or more resolved correction parameters that are used to update the database, and

(g) updating the confidence value associated with the resolved correction parameters.

17. The method as claimed in claim 16 wherein the step (f) of resolving the difference comprises averaging the improved correction parameters and the parameters in the database.

18. The method as claimed in claim 15 wherein image data for one or more additional images are provided in step (a) and wherein the algorithm used in step (e) processes one or more of the additional images in order to produce one or more improved correction parameters, said method further comprising the steps of:

(f) recalculating the confidence level for the improved correction parameters; and

(g) updating the database with the improved correction parameters and the recalculated confidence level.

19. The method as claimed in claim 18 further comprising the steps of providing one or more additional images and applying a threshold to the recalculated confidence level in order to decide whether to use the improved correction parameters to correct the additional images.

20. A computer storage medium having instructions stored therein for causing a computer to perform the method of claim 15.

* * * * *