US 20060050158A1

(19) United States

(12) Patent Application Publication

(10) Pub. No.: US 2006/0050158 A1

(43) Pub. Date: Mar. 9, 2006

Irie

(54) IMAGE CAPTURE DEVICE AND IMAGE DATA CORRECTION PROCESS OF IMAGE CAPTURE DEVICE

(75) Inventor: **Kousuke Irie**, Saitama-ken (JP)

Correspondence Address:
TAIYO CORPORATION
401 HOLLAND LANE
#407
ALEXANDRIA, VA 22314 (US)

(73) Assignee: FUJI PHOTO FILM CO., LTD.

(21) Appl. No.: 11/206,196

(22) Filed: Aug. 18, 2005

(30) Foreign Application Priority Data

Aug. 23, 2004 (JP) 2004-242288

Publication Classification

(51) Int. Cl.
H04N 9/64 (2006.01)

(52) U.S. Cl. 348/246

(57) ABSTRACT

An image capture device provided with a first memory unit, which memorizes position information of non-continuous defective pixels of a solid-state image capture component, and a second memory unit with a higher access rate than the first memory unit, which memorizes position information of continuous defective pixels. When a continuous photography mode or a video photography mode is set, defective pixel correction processing is carried out on image data corresponding to each of defective pixels according to the defective pixel position information stored at the second memory unit. Alternatively, when a still photography mode is set, image data corresponding to all defective pixels is corrected, based on both the defective pixel position information stored at the first memory unit and the defective pixel position information stored at the second memory unit. As a result, it is possible to correct defective pixels with high efficiency in accordance with conditions of photography.

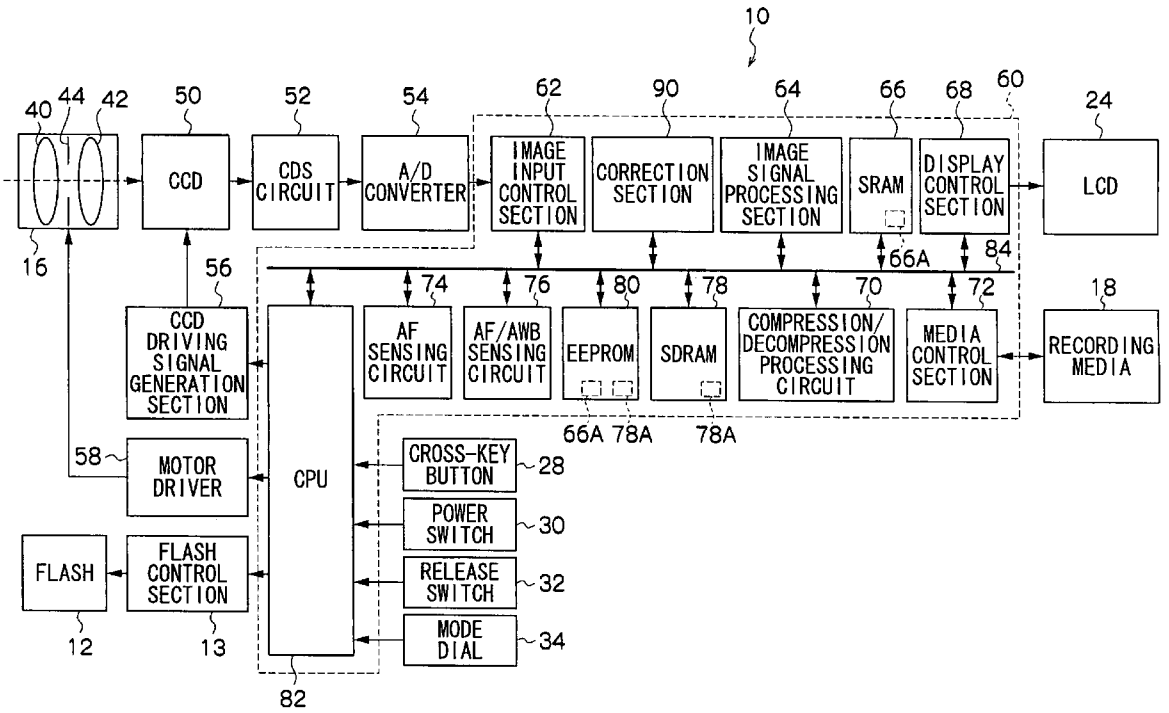

FIG.1B

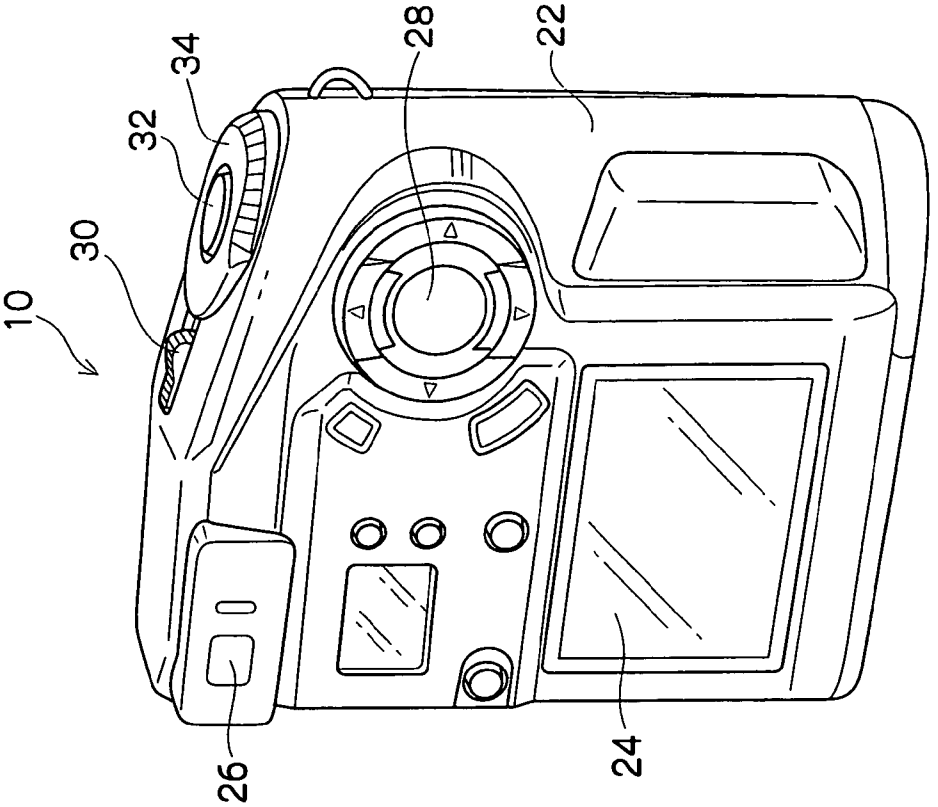

FIG.1A

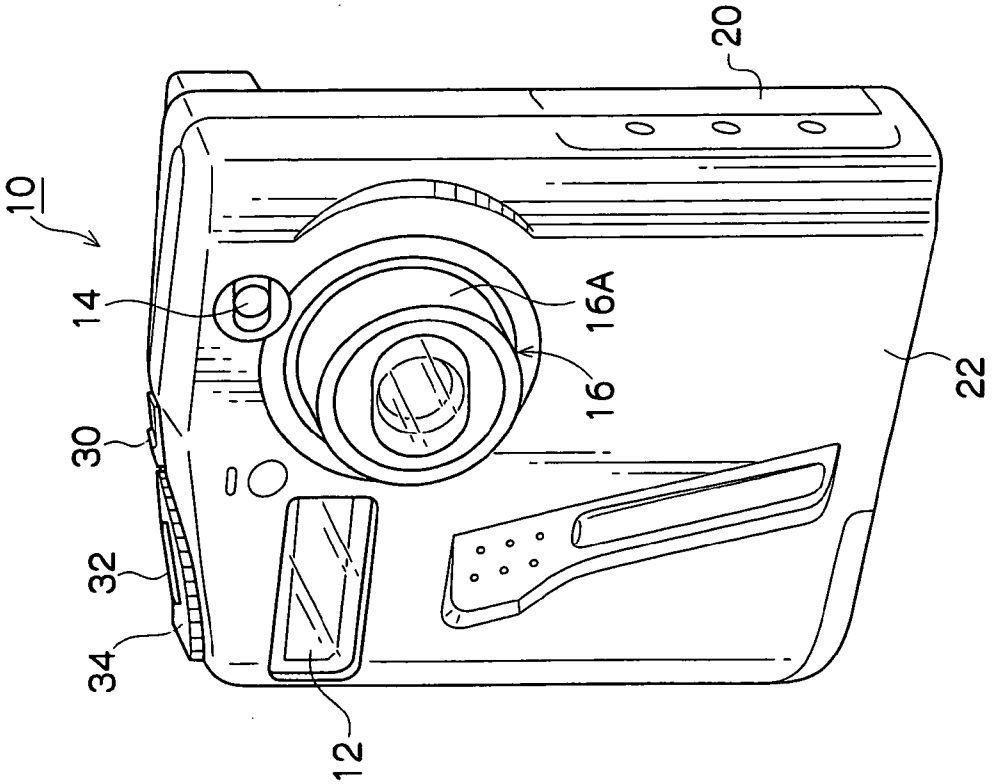

FIG.2

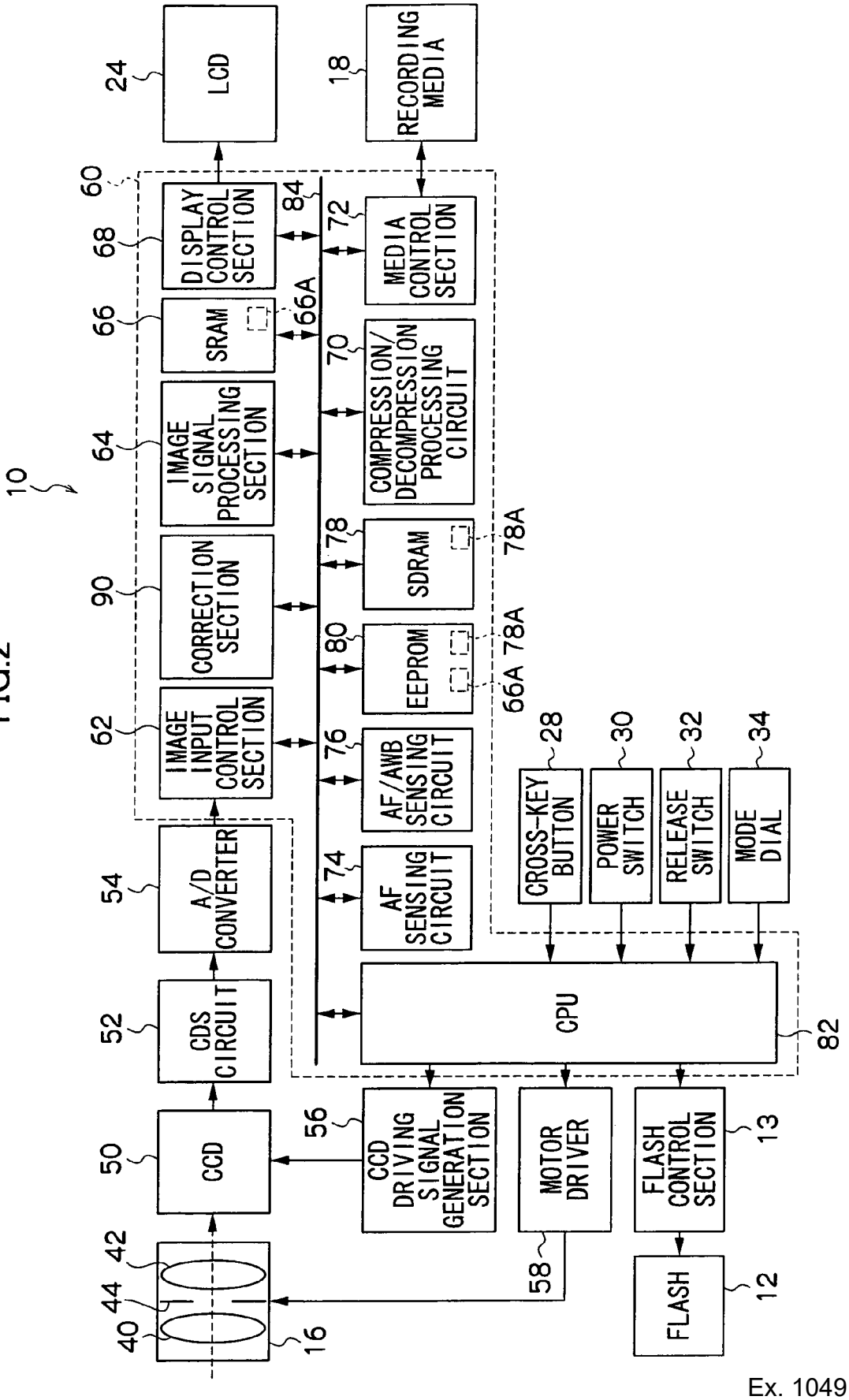
10
LCD
24
RECORDING MEDIA
18
60
DISPLAY CONTROL SECTION
68
84
MEDIA CONTROL SECTION
72
SRAM
66
66A
IMAGE SIGNAL PROCESSING SECTION
64
COMPRESSION/ DECOMPRESSION PROCESSING CIRCUIT
70
CORRECTION SECTION
90
SDRAM
78
78A
EEPROM
80
66A 78A
IMAGE INPUT CONTROL SECTION
62
AF/AWB SENSING CIRCUIT
76
AF SENSING CIRCUIT
74
A/D CONVERTER
54
CROSS-KEY BUTTON
28
POWER SWITCH
30
RELEASE SWITCH
32
MODE DIAL
34
CDS CIRCUIT
52
CPU
82
CCD
50
CCD DRIVING SIGNAL GENERATION SECTION
56
MOTOR DRIVER
58
FLASH CONTROL SECTION
13
42
44
40
16
FLASH
12

FIG.3

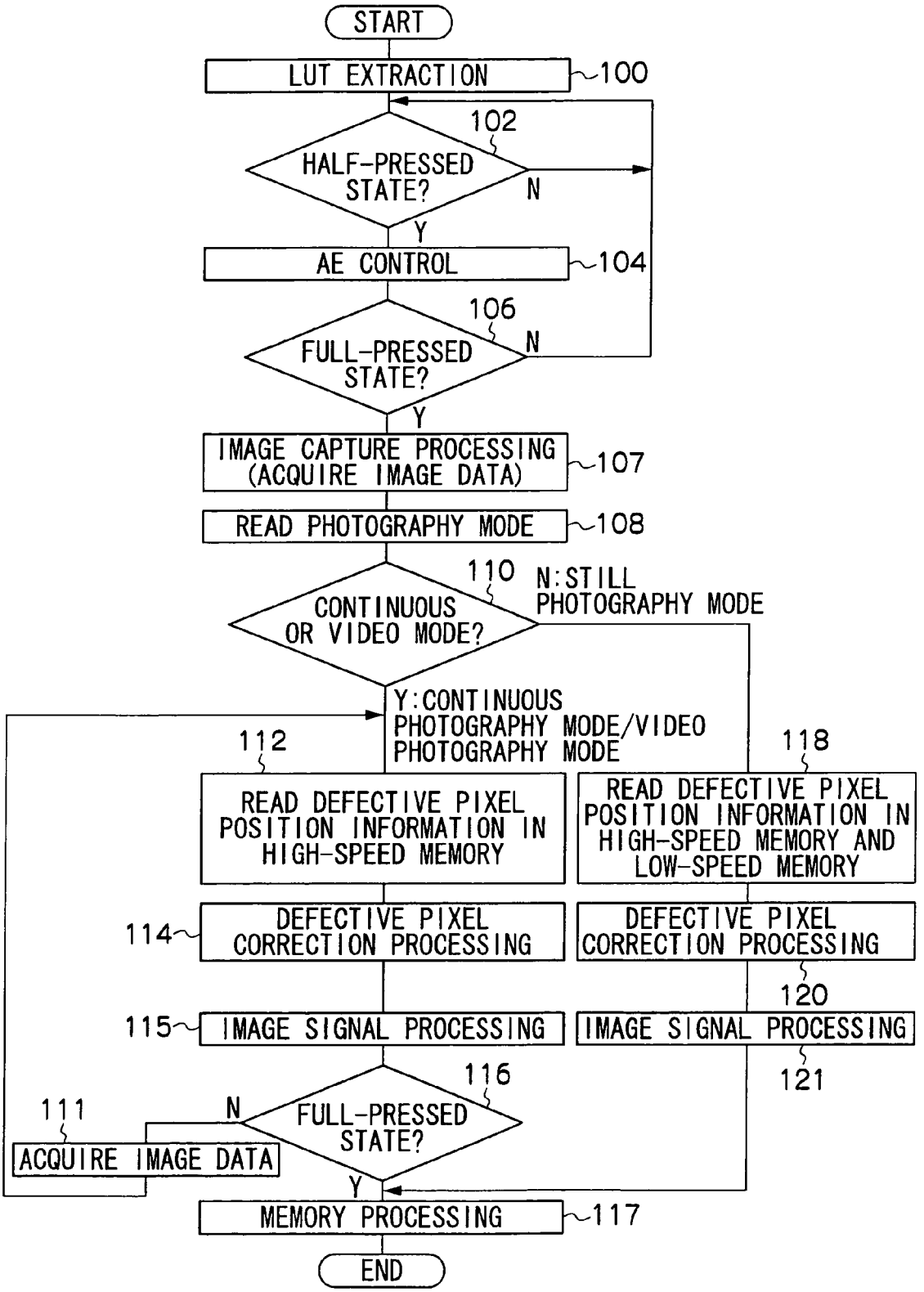
START
LUT EXTRACTION
100
102
HALF-PRESSED STATE?
N
Y
AE CONTROL
104
106
FULL-PRESSED STATE?
N
Y
IMAGE CAPTURE PROCESSING (ACQUIRE IMAGE DATA)
107
READ PHOTOGRAPHY MODE
108
110
CONTINUOUS OR VIDEO MODE?
N:STILL PHOTOGRAPHY MODE
Y:CONTINUOUS PHOTOGRAPHY MODE/VIDEO PHOTOGRAPHY MODE
112
READ DEFECTIVE PIXEL POSITION INFORMATION IN HIGH-SPEED MEMORY
118
READ DEFECTIVE PIXEL POSITION INFORMATION IN HIGH-SPEED MEMORY AND LOW-SPEED MEMORY
114
DEFECTIVE PIXEL CORRECTION PROCESSING
DEFECTIVE PIXEL CORRECTION PROCESSING
120
115
IMAGE SIGNAL PROCESSING
IMAGE SIGNAL PROCESSING
121
116
111
N
FULL-PRESSED STATE?
ACQUIRE IMAGE DATA
Y
MEMORY PROCESSING
117
END

FIG.4

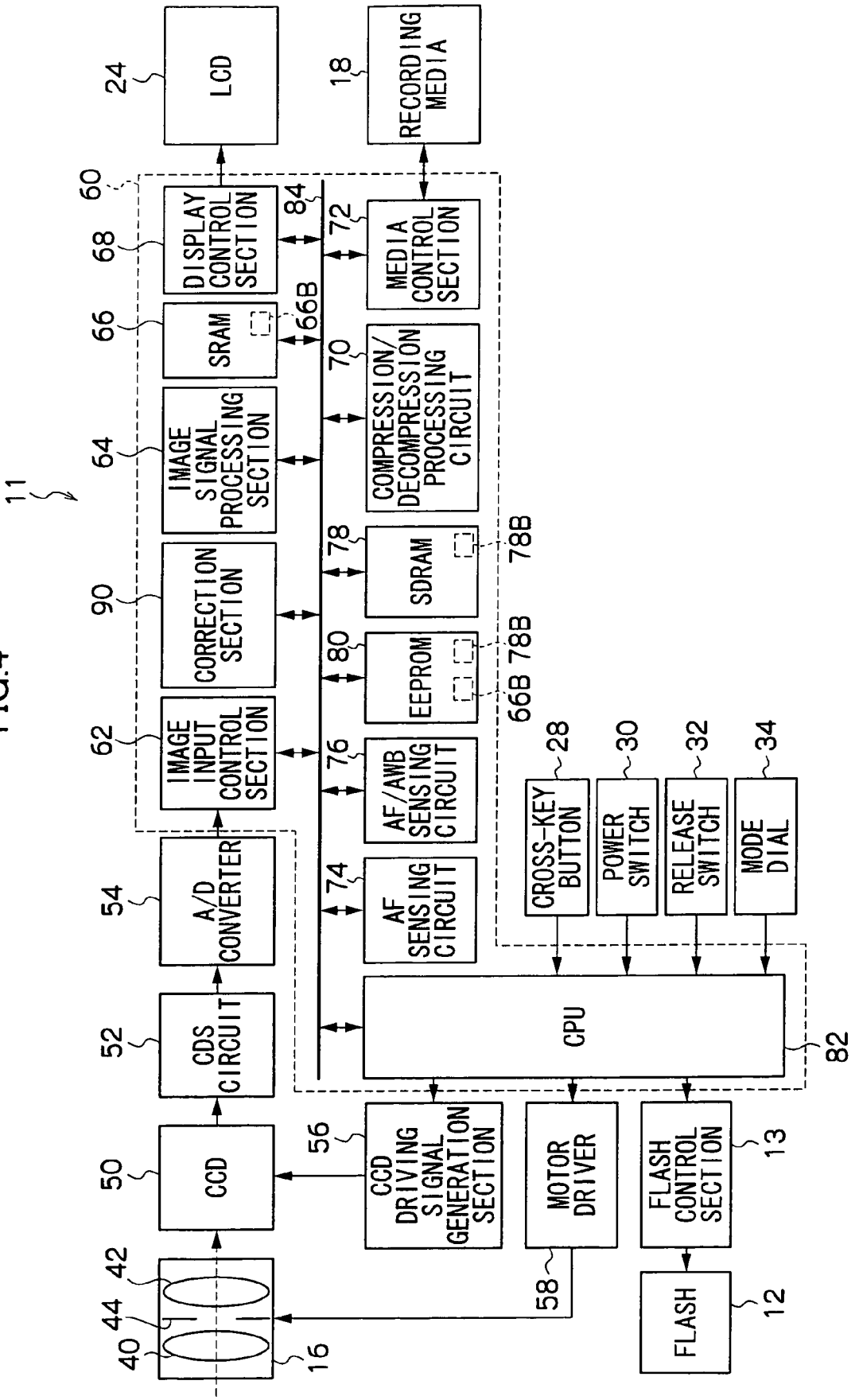
11
LCD
24
RECORDING MEDIA
18
60
DISPLAY CONTROL SECTION
68
84
MEDIA CONTROL SECTION
72
SRAM
66
66B
COMPRESSION/ DECOMPRESSION PROCESSING CIRCUIT
70
IMAGE SIGNAL PROCESSING SECTION
64
SDRAM
78
78B
CORRECTION SECTION
90
EEPROM
80
66B 78B
IMAGE INPUT CONTROL SECTION
62
AF/AWB SENSING CIRCUIT
76
CROSS-KEY BUTTON
28
POWER SWITCH
30
RELEASE SWITCH
32
MODE DIAL
34
A/D CONVERTER
54
AF SENSING CIRCUIT
74
CDS CIRCUIT
52
CPU
82
CCD
50
CCD DRIVING SIGNAL GENERATION SECTION
56
MOTOR DRIVER
58
FLASH CONTROL SECTION
13
42
44
40
16
FLASH
12

FIG.5

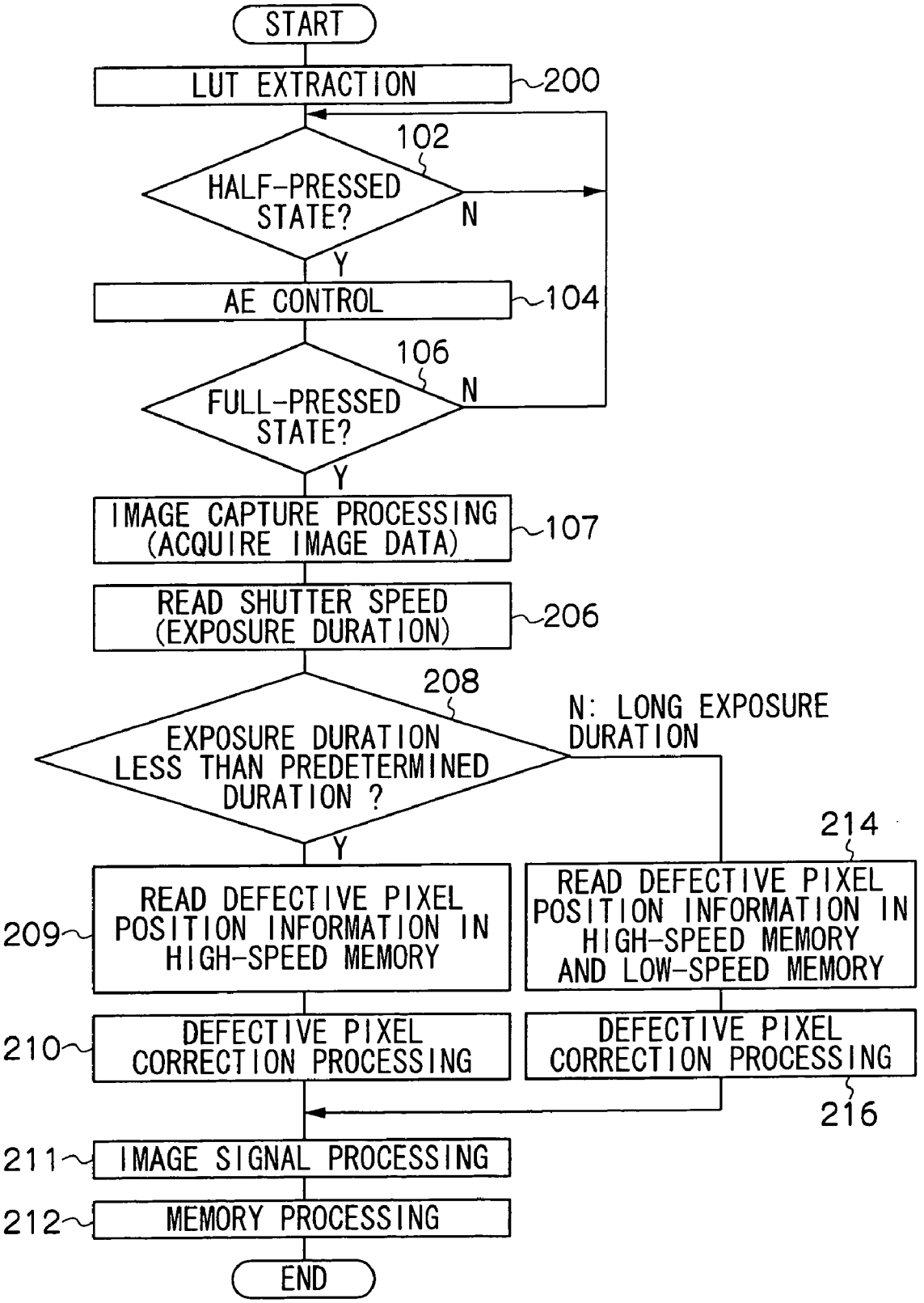
START
LUT EXTRACTION
200
102
HALF-PRESSED STATE?
N
Y
AE CONTROL
104
106
FULL-PRESSED STATE?
N
Y
IMAGE CAPTURE PROCESSING (ACQUIRE IMAGE DATA)
107
READ SHUTTER SPEED (EXPOSURE DURATION)
206
208
EXPOSURE DURATION LESS THAN PREDETERMINED DURATION ?
N: LONG EXPOSURE DURATION
Y
214
READ DEFECTIVE PIXEL POSITION INFORMATION IN HIGH-SPEED MEMORY
209
READ DEFECTIVE PIXEL POSITION INFORMATION IN HIGH-SPEED MEMORY AND LOW-SPEED MEMORY
210
DEFECTIVE PIXEL CORRECTION PROCESSING
DEFECTIVE PIXEL CORRECTION PROCESSING
216
211
IMAGE SIGNAL PROCESSING
212
MEMORY PROCESSING
END

IMAGE CAPTURE DEVICE AND IMAGE DATA CORRECTION PROCESS OF IMAGE CAPTURE DEVICE

CROSS-REFERENCE TO RELATED APPLICATION

[0001] This application claims priority under 35 USC 119 from Japanese Patent Application No. 2004-242288, the disclosure of which is incorporated by reference herein.

BACKGROUND OF THE INVENTION

[0002] 1. Field of the Invention

[0003] The present invention relates to an image capture device and an image data correction process at the image capture device, and more particularly to an image capture device such as a digital camera or the like.

[0004] 2. Description of the Related Art

[0005] Conventionally, solid-state image capture components of digital cameras, which serve as image capture devices, convert light corresponding to subjects to electronic signals by photoelectric conversion with pluralities of photoelectric conversion elements, and output the electronic signals. Among such photoelectric conversion elements, there may be defects (defective pixels) due to adhesion of dust, damage and the like, and due to crystal defects and the like. Hence, it may not be possible to output signals which accurately correspond to light amounts of incident light with these defective pixels. Among such defective pixels, a defective pixel which is caused by dust, damage or the like is a defective pixel with a static characteristic, which is not affected by conditions of operation of the image capture device. On the other hand, a defective pixel which arises due to a crystal defect is a defective pixel with a dynamic characteristic, in which there is a greater effect of deterioration in image quality when a duration of exposure of the solid-state image capture component is longer.

[0006] Techniques for performing corrections of image data that corresponds to these various types of defective pixels have been known (for example, Japanese Patent Application Laid-Open (JP-A) No. 2000-101925).

[0007] In the technique disclosed in JP-A No. 2000-101925, in accordance with conditions of photography, such as shutter speed, ambient temperature and so forth, position information representing each of positions of defective pixels caused by dust, damage and the like and positions of defective pixels caused by crystal defects is memorized in a lookup table for a plurality of values of each of the conditions of photography. Hence, position information of defective pixels is selected from the lookup table in accordance with an ambient temperature and shutter speed or the like at a time of photography, and correction of the defective pixels is carried out in accordance with the thus-specified position information. However, although it is possible to perform correction for defective pixels in accordance with conditions of photography with the conventional technique described above, when image data corresponding to the defective pixels is to be corrected, it is necessary to select the position information of the defective pixels corresponding to the conditions of photography from among a large amount of pre-memorized position information representing defective pixel positions. Therefore, when photography conditions which require high-speed image processing are specified, an amount of time for reading the information relating to defective pixels may be a problem.

SUMMARY OF THE INVENTION

[0008] The present invention has been devised in order to solve the problem described above, and an object of the present invention is to provide an image capture device which carries out correction of defective pixels with high efficiency in accordance with conditions of photography.

[0009] A first aspect of the present invention for achieving the object described above is an image capture device including: an image capture unit including a solid-state image capture component, which is equipped with a plurality of photoelectric conversion elements for photoelectrically converting light in accordance with a subject, the image capture unit providing image data of a photographic image of the subject with the solid-state image capture component; a first memory unit, which memorizes position information of each of non-contiguous defective pixels at the solid-state image capture component; a second memory unit, with a higher access rate than the first memory unit, which memorizes position information of each of contiguous defective pixels at the solid-state image capture component; a mode setting unit, at which mode information representing a photography mode is set; and a correction unit which corrects the image data, wherein, when the mode information set at the mode setting unit represents one of a continuous photography mode for providing image data of a series of photographic images and a video photography mode for providing image data of a moving image, the correction unit corrects, of the image data provided by the image capture unit, image data that corresponds to defective pixels according to the position information memorized at the second memory unit, and when the mode information set at the mode setting unit represents a still photography mode for providing image data of a still image, the correction unit corrects, of the image data provided by the image capture unit, image data that corresponds to defective pixels according to the position information memorized at the second memory unit and the position information memorized at the first memory unit.

[0010] The image capture unit of the image capture device of the first aspect obtains image data of a photographic image with the solid-state image capture component, which is provided with the plurality of photoelectric conversion elements for photoelectric conversion of light according to a subject. The first memory unit memorizes position information of each of defective pixels which do not output image data accurately corresponding to light amounts of incident light, which information is generated for positions which are non-continuous, which is to say scattered, at the solid-state image capture component. The second memory unit is a high-speed memory, which has a higher rate of access to memorized information than the first memory unit. The second memory unit memorizes position information of each of defective pixels which are continuous at the solid-state image capture component. The mode setting unit acquires mode information representing a photography mode. When the mode information acquired by the mode setting unit is mode information representing the continuous photography mode, for obtaining image data of a series of photographic images, or the video photography mode, for

obtaining image data of moving images, the correction unit corrects, of the image data obtained by the image capture unit, image data corresponding to the position information of each of the contiguous defective pixels that has been memorized by the second memory unit, which is the high-speed memory. When the mode information acquired by the mode setting unit represents the still photography mode, for obtaining image data of still images, the correction unit corrects, of the image data acquired by the image capture unit, image data corresponding to the position information of each of the non-contiguous defect pixels that has been memorized by the first memory unit, which is a lower-speed memory than the second memory unit, and the position information memorized by the second memory unit.

[0011] Thus, when mode information is acquired which represents the continuous photography mode or the video photography mode, which require processing of image data at higher speeds than for acquisition of image data of photographic images by the still photography mode which provides image data of still images, the image data is corrected in accordance with position information of continuous defective pixels, which more greatly affect image quality, which information is memorized at the second memory unit, which is the high-speed memory. When mode information is acquired which represents the still photography mode, which requires acquisition of image data with higher image quality, the image data is corrected in accordance with the position information of all defective pixels at the solid-state image capture component, which information is memorized at the two memory units, the first memory unit and the second memory unit.

[0012] As a result, it is possible to perform corrections of defective pixels with high efficiency in accordance with photography conditions, without durations of reading of information relating to defective pixels having any effect.

[0013] In the image capture device of the first aspect, the first memory unit compresses and stores the position information of defective pixels. When the mode information set at the mode setting unit is mode information which represents the still photography mode, which provides image data of still images, the correction unit corrects, of the image data provided by the image capture unit, image data which corresponds to defective pixels according to the position information memorized at the second memory unit and position information which is decompressed from the compressed position information of defective pixels, which has been memorized at the first memory unit.

[0014] The first memory unit can compress and memorize the position information of non-continuous defective pixels of the solid-state image capture unit. When the mode information set at the mode setting unit is mode information representing the still photography mode for obtaining image data of still images, the correction unit corrects image data that corresponds to defective pixels according to both the position information which is decompressed from the compressed position information memorized at the first memory unit and the non-compressed position information which is memorized at the second memory unit. Accordingly, because the position information of the non-continuous defective pixels of the solid-state image capture component stored at the second memory unit is compressed for memorization, memory capacity of the second memory unit can be assured. Further, the decompression of the compressed position information is carried out only when mode information is acquired which represents the still photography mode for obtaining image data of still images, with which the need for rapid processing is lower than with image data obtained by the continuous photography mode or the video photography mode. Thus, it is possible to prevent reductions in processing speeds in the image capture device due to decompression processing.

[0015] The correction unit can correct image data that corresponds to defective pixels by interpolating image data that corresponds to the defective pixels from image data of pixels around the defective pixels.

[0016] The correction unit can perform correction by interpolating the image data corresponding to the defective pixels of the solid-state image capture unit from image data corresponding to pixels circumferential to the defective pixels, from which signals which accurately correspond to light amounts of incident light can be outputted.

[0017] As illustrated hereabove, when mode information is acquired which represents the continuous photography mode or the video photography mode, for which higher speeds of processing of image data are required than for the still photography mode, image data corresponding to the position information of defective pixels which are continuous, which is stored in the second memory which is a high-speed memory, is corrected. When mode information is acquired which represents the still photography mode, which requires acquisition of image data at higher image quality than in the video photography mode and the continuous photography mode, image data corresponding to position information of all the defective pixels of the solid-state image capture component, which is memorized in both the first memory unit and the second memory unit, is corrected. Thus, benefits are provided in that it is possible to restrain durations for acquisition of information relating to defective pixels from becoming a problem, and it is possible to perform corrections of defective pixels with high efficiency in accordance with conditions of photography.

[0018] A second aspect of the present invention is an image capture device including: an image capture unit, which provides image data of a photographic image with a solid-state image capture component, which is equipped with a plurality of photoelectric conversion elements for photoelectrically converting light in accordance with a subject; a first memory unit, which memorizes position information of first defective pixels at the solid-state image capture component, a noise component which is included in image data corresponding to these defective pixels being larger for a longer exposure duration of the solid-state image capture component; a second memory unit, with a higher access rate than the first memory unit, which memorizes position information of second defective pixels at the solid-state image capture component, a noise component which is included in image data corresponding to these defective pixels being constant with respect to changes of the exposure duration of the solid-state image capture component; a duration information provision unit, which provides information representing the exposure duration of the solid-state image capture component; and a correction unit which corrects the image data, wherein, when the exposure duration information provided by the duration information pro-

vision unit represents an exposure duration greater than or equal to a predetermined duration, the correction unit corrects, of the image data provided by the image capture unit, image data that corresponds to defective pixels according to the position information memorized at the first memory unit and the position information memorized at the second memory unit, and when the exposure duration information provided by the duration information provision unit represents an exposure duration less than the predetermined duration, the correction unit corrects, of the image data provided by the image capture unit, image data that corresponds to defective pixels according to the position information memorized at the second memory unit.

[0019] The image capture device of the second aspect obtains image data of a photographic image with the solid-state image capture component, which is provided with the plurality of photoelectric conversion elements for photoelectric conversion of light according to a subject. The first memory unit memorizes, from among defective pixels which do not output image data accurately corresponding to light amounts of incident light at the solid-state image capture component, position information of defective pixels for which a noise component included in the image data that is outputted is larger for longer durations of exposure of the solid-state image capture component. The second memory unit is a high-speed memory, which has a higher rate of access to memorized information than the first memory unit. The second memory unit memorizes position information of defective pixels for which a noise component included in the image data that is outputted is constant for long and short durations of exposure of the solid-state image capture component, that is, unaffected by durations of exposure. The duration information provision unit acquires exposure duration information representing a duration of exposure of the solid-state image capture component. The exposure duration information is acquired by, for example, acquisition of an exposure duration specified on the basis of the image data acquired by the image capture unit, acquisition of information which represents an exposure duration for a shutter speed or the like which is inputted from outside, or the like. When the exposure duration information acquired by the duration information provision unit is exposure duration information which represents an exposure duration of less than the predetermined duration, which has been specified previously, the correction unit corrects, of the image data obtained by the image capture unit, image data corresponding to defective pixels according to the position information which is memorized at the second memory unit, which is the high-speed memory. Further, when the exposure duration information acquired by the duration information provision unit is exposure duration information which represents an exposure duration of more than the previously specified predetermined duration, the correction unit corrects, of the image data obtained by the image capture unit, image data corresponding to defective pixel position information which is memorized by either of the second memory unit, which is the high-speed memory, and the first memory unit, which is a lower-speed memory.

[0020] Thus, when the exposure duration is short, image data corresponding to position information of defective pixels which do not output image data which accurately corresponds to light amounts of incident light irrespective of whether the exposure duration is long or short, which information is stored at the second memory unit which is a high-speed memory, is corrected. When the exposure duration is long, image data according to both the position information of defective pixels memorized at the second memory unit, which is the high-speed memory, and the position information of defective pixels for which the noise component included in the outputted image data is larger for a longer exposure duration, which is memorized at the first memory unit which is a low-speed memory, is corrected.

[0021] Accordingly, because the image data according to the position information of defective pixels which are not affected by the exposure duration, which is stored at the second memory unit which is the high-speed memory, is corrected when the exposure duration is short, and the image data according to both the position information of defective pixels for which there is a greater effect of image quality deterioration when the exposure duration is longer, which is stored at the first memory unit which is the low-speed memory, and the position information of defective pixels stored at the second memory unit which is a high-speed memory is corrected when the exposure duration is long, no effect is exerted by durations of reading of information relating to defective pixels, and it is possible to carry out corrections of defective pixels with high efficiency in accordance with lengths of exposure durations, which is to say conditions of photography.

[0022] In the image capture device of the second aspect, the first memory unit compresses and stores the position information of defective pixels. When the exposure duration information that the duration information provision unit provides is exposure information representing an exposure duration of less than the predetermined duration, the correction unit corrects, of the image data provided by the image capture unit, image data which corresponds to defective pixels according to the position information memorized at the second memory unit and position information which is decompressed from the compressed position information of defective pixels, which has been memorized at the first memory unit.

[0023] The first memory unit can compress and memorize position information of defective pixels at the solid-state image capture unit. When the exposure duration information that the duration information provision unit provides is exposure information representing an exposure duration of equal to or greater than less than the pre-specified duration, the correction unit corrects, of the image data obtained by the image capture unit, image data that corresponds to defective pixels according to both the position information which is decompressed from the compressed position information memorized at the first memory unit and the non-compressed position information which is memorized at the second memory unit. Accordingly, because the position information of defective pixels of the solid-state image capture component that is stored at the second memory unit is compressed and memorized, memory capacity of the second memory unit can be assured. Further, the decompression of compressed position information is carried out only for correction processing of defective pixels at a time of acquisition with an exposure duration longer than the predetermined duration. Thus, it is possible to restrain durations required for decompression processing from affecting acquired exposure durations.

[0024] If the image capture device of the second aspect is further provided with the mode setting unit, mode informa-

tion representing a photography mode can also be acquired. When the mode information set at the mode setting unit is information representing a high image quality mode which corrects the image data acquired by the image capture unit so as to produce image data with a high image quality, the correction unit can correct image data that corresponds to defective pixels according to the position information stored at both of the first memory unit and the second memory unit. As a result, when image quality is to be prioritized and mode information which represents the high image quality mode is acquired, for performing correction so as to provide high-quality image data, corresponding image data can be corrected on the basis of position information of all the defective pixels included at the solid-state image capture component. Thus, it is possible to perform correction of defective pixels with high efficiency in accordance with photography modes.

BRIEF DESCRIPTION OF THE DRAWINGS

[0025] **FIG. 1A** is a perspective view of a digital camera relating to an embodiment of the present invention, and is a front view of the digital camera.

[0026] **FIG. 1B** is a perspective view of the digital camera relating to the embodiment of the present invention, and is a rear view of the digital camera.

[0027] **FIG. 2** is a block diagram showing structure of an electrical system of a digital camera relating to a first embodiment of the present invention.

[0028] **FIG. 3** is a flowchart showing a processing routine which is executed by a CPU of the digital camera relating to the first embodiment of the present invention.

[0029] **FIG. 4** is a block diagram showing structure of an electrical system of a digital camera relating to a second embodiment of the present invention.

[0030] **FIG. 5** is a flowchart showing a processing routine which is executed by a CPU of the digital camera relating to the second embodiment of the present invention.

DETAILED DESCRIPTION OF THE INVENTION

[0031] Herebelow, embodiments in which the present invention is applied to digital cameras will be described with reference to the drawings.

First Embodiment

[0032] As shown in **FIG. 1A**, a flash **12**, a viewfinder window **14** and an optical unit **16** are provided at a front face of a digital camera **10** which serves as an image capture device of the present invention. The flash **12** emits light when illumination is poor. Light from a subject to be photographed is incident at the viewfinder window **14**. The optical unit **16** is for focusing a subject image. A slot **20** is provided at a side face of the digital camera **10**. A portable recording media **18** (see **FIG. 2**), which records images obtained by photography as digital data, can be mounted at the slot **20**.

[0033] The optical unit **16** is a retracting-type optical lens, which is retracted inside a casing **22** of a main body of the digital camera **10** except at times of photography. At times of photography, an extendable barrel **16**A is extended along an optical axis and, as shown in **FIG. 1A**, the barrel **16**A is exposed outside the casing **22**. The optical unit **16** includes, inside the barrel **16**A, an imaging lens **40**, a focusing lens **42** and an aperture/shutter mechanism **44** (see **FIG. 2**). The imaging lens **40** may be a single condensing lens (for fixed focus) structured by one or a plurality of lenses, and may be a lens with which focusing distance is alterable, such as a zoom lens or a telescopic/wide-angle bifocal switching lens.

[0034] Meanwhile, as shown in **FIG. 1B**, an LCD **24**, a viewfinder eyepiece **26** and a cross-key button **28** are provided at a rear face of the digital camera **10**. The LCD **24** displays subject images obtained by photography, and various menus, parameters and so forth. The viewfinder eyepiece **26** guides light that is incident on the viewfinder window **14** through an unillustrated optical member for viewing by a camera user when composition of a subject image to be photographed is being determined. The cross-key button **28** is operated by the camera user when desired menu items are being selected from menu displays, and when zoom ratio settings, various other parameters and so forth are being selected.

[0035] Further, at an upper face of the digital camera **10**, a power switch **30**, a release switch ("shutter button") **32** and a mode dial **34** are provided. The power switch **30** performs switching between supply and non-supply of electrical power to various parts of the digital camera **10**. The release switch **32** is pressed for operation by the camera user in order to input a photography command. The mode dial **34** is turned for operation by the camera user when the camera user is selecting a photography mode. The release switch **32** is structured to be capable of a two-step pressing operation: a state which is pressed down to an intermediate position (below referred to as a half-pressed state) and a state which is pressed beyond the intermediate position to a lowermost position (below referred to as a full-pressed state). At the digital camera **10**, as will be described in more detail later, an AE (automatic exposure) function operates and exposure conditions (shutter speed and aperture state) are specified when the release switch **32** is half-pressed. Thereafter, an AF (auto focus) function operates to regulate focusing, and calculation of an AWB compensation value (a standard compensation value for correcting white balance), setting of a compensation value for regulating sensitivity, which will be described later, and calculation of adjustment values for adjusting both the sensitivity and the white balance are implemented. Subsequently, exposure (photography) is performed when the release switch **32** is further pressed to the full-pressed state. Herein, setting of the shutter speed may be performed automatically as described above, and may be performed manually. As photography modes of the present embodiment, a case in which it is possible to set a still photography mode, which obtains image data of a still image when the release switch **32** is put into the full-pressed state, a continuous photography mode, which performs consecutive image capture of a designated number of images when the release switch **32** is put into the full-pressed state, and a video photography mode, which obtains image data of a moving image when the release switch **32** is put into the full-pressed state, will be described.

[0036] Next, structure of an electrical system of the digital camera **10** relating to the present embodiment will be described.

[0037] As shown in **FIG. 2**, the digital camera **10** is equipped with a CCD (charge coupled device) **50**, a CDS circuit **52**, an analog-digital converter (below referred to as an A/D converter) **54**, a CCD driving signal generation section **56**, a motor driver **58**, a flash control section **13** and a main control section **60**. The CCD **50** is disposed on the optical axis of the optical unit **16**. The main control section **60** administers overall operations of the digital camera **10**.

[0038] The CDS circuit **52** performs correlated double sampling (CDS) processing of output signals from the CCD **50** which represent an acquired subject image, performs color separation processing to signals of each of the colors R, G and B, and adjusts a signal level of each color signal. The A/D converter **54** converts analog signals processed by the CDS circuit **52** to digital signals. The CCD driving signal generation section **56** generates timing signals for driving the CCD **50**. The motor driver **58** drives each of a zoom motor for moving the imaging lens **40** included at the optical unit **16** (i.e., extending/retracting the barrel), an AF (auto focus) motor for moving the focusing lens **42**, and an iris-shutter motor which drives the aperture/shutter mechanism **44**. The flash control section **13** controls light emissions by the flash **12**. The main control section **60** administers overall operations of the digital camera **10**.

[0039] At the main control section **60**, an image input control section **62**, an image signal processing section **64**, an SRAM **66**, a display control section **68**, a compression/decompression processing circuit **70**, a media control section **72**, an AF sensing circuit **74**, an AE (auto exposure)/AWB (auto white balance) sensing circuit **76**, a correction section **90**, an SDRAM (synchronous dynamic random access memory) **78**, an EEPROM (electrically erasable programmable read-only memory) **80** and a CPU **82** are connected to one another by a bus **84**. The CPU **82** is also connected to the CCD driving signal generation section **56** and the motor driver **58**. Furthermore, the CPU **82** is connected with the cross-key button **28**, the power switch **30**, the release switch **32** and the mode dial **34**.

[0040] The digital signals which have been digitalized by the A/D converter **54** are inputted to the image input control section **62** as image data of a subject image representing the subject. A plurality of different lookup tables (below referred to as LUTs), which store information of various programs, parameters and the like, and information representing positions of defective pixels and so forth, are preparatorily stored at the EEPROM **80**. As a plurality of various LUTs memorized at the EEPROM **80** for the present embodiment, a continuous defect correction LUT **66**A and an isolated defect correction LUT **78**A are respectively stored.

[0041] Correction information for correcting defective pixels which occur at contiguous positions on the CCD **50** is memorized in the continuous defect correction LUT **66**A in the form of position information representing positions of the respective defective pixels occurring at concatenated positions. Correction information for correcting defective pixels which occur individually at separated positions on the CCD **50** is stored in the isolated defect correction LUT **78**A in the form of position information representing positions of the single defective pixels.

[0042] Herein, for the present embodiment, the defective pixels corresponding to the position information memorized in the continuous defect correction LUT **66**A and the isolated defect correction LUT **78**A are explained as: defective pixels which are caused by dust adhering to a light incidence face of the CCD **50**, at which black flaws arise due to incident light on pixels that correspond to the positions at which dust is adhered being blocked; defective pixels which are caused by damage or the like to color microfilters, microlenses and the like that are formed at the light incidence face of the pixels; and defective pixels which are caused by white flaws at which desired optical characteristics are not provided locally. These defective pixels are static defect pixels, which are not dependent on temperature, exposure duration and the like.

[0043] The SDRAM (synchronous dynamic random access memory) **78** is used as a working memory during execution of various processes by the CPU **82**. The SDRAM **78** principally stores image data obtained by image capture. When the digital camera **10** is turned on, the isolated defect correction LUT **78**A is extracted from the EEPROM **80** by control of the CPU **82**. The SRAM (static random access memory) **66** is a high-speed memory with a faster rate of access to memorized data than an SDRAM. The continuous defect correction LUT **66**A is extracted to the SRAM **66** from the EEPROM **80** by control of the CPU **82** when the digital camera **10** is turned on. In accordance with conditions of photography, the correction section **90**, which will be discussed in more detail later, performs defective pixel correction on, of the image data that is inputted from the A/D converter **54** via the image input control section **62**, image data that corresponds to the position information of defective pixels that is memorized in one or both of the continuous defect correction LUT **66**A and the isolated defect correction LUT **78**A (as will be described in more detail later). The image signal processing section **64** performs predetermined digital signal processing on the image data that has been subjected to defective pixel correction. The display control section **68** controls display by the LCD **24** so as to display an image based on image data stored in the SRAM **66**. The compression/decompression processing circuit **70** compresses/expands inputted image data. The media control section **72** writes various kinds of information to the recording media **18** mounted at the slot **20**. The AF sensing circuit **74** detects a suitable focusing position on the basis of inputted image data. The AE/AWB sensing circuit **76** adjusts for suitable exposure and white balance on the basis of inputted image data.

[0044] Generally, a shutter drain connected via a shutter gate is provided at the CCD **50**, and accumulated signal charge can be released to the shutter drain when the shutter gate is driven by a shutter gate pulse. That is, the CCD **50** features an "electronic shutter" function, which controls an accumulation duration for which charge is accumulated at the photoelectric conversion elements (a shutter speed) with the shutter gate pulse. The CCD **50** may employ this electronic shutter function in place of a shutter function of the aperture/shutter mechanism **44**.

[0045] Herein, the SRAM **66** corresponds to a second memory unit of an image capture device of the present invention, the SDRAM **78** corresponds to a first memory unit of the present invention, and the correction section **90** corresponds to a correction unit of the image capture device of the present invention.

[0046] Next, operations of the digital camera **10** relating to the embodiment described above will be described.

[0047] **FIG. 3** shows a processing routine which is executed by the CPU **82**. When power to the digital camera **10** is turned on by the power switch **30**, the sequence proceeds to step **100**, the continuous defect correction LUT **66**A memorized at the EEPROM **80** is extracted to the SRAM **66**, which is a high-speed memory, and the isolated defect correction LUT **78**A is extracted to the SDRAM **78**, which is a lower-speed memory than the SRAM **66**.

[0048] Next, in step **102**, a negative judgement is repeated until it is judged that the release switch **32** is in the half-pressed state. When the judgement is positive, the sequence advances to step **104**. In step **104**, a subject brightness (a photographic EV value) is found on the basis of an aggregated value aggregated from the R, G and B signals for one frame of a subject image. On the basis of this photographic EV, AE control is performed to set an aperture value and a shutter speed, which serve as exposure control values.

[0049] Next, in step **106**, it is determined whether or not the release switch **32** is fully pressed. When this judgment is negative, the sequence returns to step **102**, and when the judgment is positive, the sequence advances to step **107**.

[0050] In step **107**, a state of the aperture/shutter mechanism **44** is controlled in accordance with the aperture condition set in step **104**. Then, image capture processing is executed, in which an accumulation duration for charge to be accumulated at the photoelectric conversion elements corresponding to the pixels of the CCD **50** is controlled by the electronic shutter function of the CCD **50** so as to match the shutter speed set in step **104**, and charge that is transferred from the photoelectric conversion elements is sequentially outputted from the CCD **50**, then converted to digital data by the A/D converter **54** and inputted to the main control section **60** to serve as image data of a photographic image according to image data for each pixel. Herein, the processing of step **107** corresponds to the functioning of an image capture unit of the image capture device of the present invention.

[0051] In step **108**, photography mode acquisition processing is executed. The processing of step **108** can be performed by reading, from an unillustrated memory, information which represents a photography mode that has been specified by manipulation of the mode dial **34** by a user. This information representing the photography mode may be memorized in the unillustrated memory when the mode dial **34** is operated by the user. Herein, the processing of step **108** corresponds to the functioning of a mode setting unit of the image capture device of the present invention.

[0052] Next, in step **110**, it is determined whether or not the information representing the photography mode that has been read in step **108** is mode information representing the continuous photography mode or the video photography mode. If this judgement is positive, the sequence proceeds to step **112**, and the position information representing positions of defective pixels that is stored in the continuous defect correction LUT **66**A memorized at the SRAM **66**, which is the high-speed memory, is read in.

[0053] In a subsequent step **114**, on the basis of the position information representing positions of defective pixels, which has been read in the above-described step **112** and stored in the continuous defect correction LUT **66**A that has been memorized at the SRAM **66** which is the high-speed memory, processing for correction of defective pixels of the photographic image image data (i.e., the image data of the captured image) acquired in step **107** is executed. The defective pixel correction processing is carried out by, for example, setting image data corresponding to a defective pixel in the photographic image image data, which features a defect, to an average value of charges of pixels neighboring the defective pixel. Herein, the defective pixel correction processing may be carried out by applying addition/subtraction/division/multiplication of pre-specified correction values to image data corresponding to defective pixels in the image data of the captured image, but is not limited to such forms.

[0054] Next, in step **115**, the photographic image image data which has been subjected to defective pixel correction processing is subjected to image processing for implementing the predetermined digital signal processing, after which the image-processed image data is memorized at the SDRAM **78**.

[0055] Next, in step **116**, it is determined whether or not the release switch **32** is in the full-pressed state. If this judgement is negative, the sequence proceeds to step **111**, processing similar to the above-described step **107** is performed and image data is acquired, after which the sequence returns to step **112**. When the judgement is positive, the sequence proceeds to step **117**.

[0056] Here, if it was determined in step **110** that the mode information represents the continuous photography mode, instead of the judgement of step **116**, it may be determined whether or not a predetermined number, which is specified in advance, of frames of image data have been acquired. If this judgement is negative, a count value of an unillustrated counter is incremented, after which the sequence proceeds to step **111**. If the judgement is positive, the unillustrated counter is reset, and then the sequence proceeds to step **117**.

[0057] In step **117**, the photographic image image data which has been subjected to the defective pixel correction processing and various other image processes is processed for compression/decompression, after which memory processing for memorizing the image data at the recording media **18** is executed. Subsequently, the present routine ends.

[0058] On the other hand, if the judgement in step **110** is negative, with the photography mode read in step **108** being the still photography mode, the sequence proceeds to step **118** and reads in both the position information representing positions of defective pixels which is stored in the continuous defect correction LUT **66**A memorized at the SRAM **66**, which is the high-speed memory, and the position information representing positions of defective pixels which is stored in the isolated defect correction LUT **78**A memorized at the SDRAM **78**, which is the low-speed memory.

[0059] Next, in step **120**, in a similar manner to the processing of the above-described step **114**, of the image data obtained in step **107**, defective pixel correction processing is carried out on image data that corresponds to position information of defective pixels, on the basis of the position information of defective pixels stored in the continuous defect correction LUT **66**A and the isolated defect correction LUT **78**A.

[0060] Next, in step **121**, in a similar manner to the above-described step **115**, image processing is performed to implement predetermined digital signal processing on the photographic image image data which has been subjected to the defective pixel correction processing, after which the sequence proceeds to the aforementioned step **117**.

[0061] Herein, the processing of steps **114** and **120** corresponds to functioning of the correction unit of the present invention.

[0062] As has been described above, in the digital camera **10** of the present embodiment, when the continuous photography mode or the video photography mode is set, which modes require higher-speed processing of image data in which speed is prioritized over image quality than the still photography mode which provides image data of still images, the defective pixel correction processing is carried out on, of the image data of a photographic image, image data that corresponds to respective defective pixels which occur at contiguous positions, according to the defective pixel position information that is stored in the continuous defect correction LUT **66**A memorized at the SRAM **66**, which is the high-speed memory.

[0063] Further, when the still photography mode is set, which requires acquisition of higher-image quality image data than the continuous photography mode and the video photography mode, correction is applied to, of image data of a photographic image, image data that corresponds to position information of all defective pixels of the CCD **50**, according to both the defective pixel position information that is stored in the isolated defect correction LUT **78**A memorized at the SDRAM **78**, which is a lower-speed memory than the SRAM **66**, and the defective pixel position information that is stored in the continuous defect correction LUT **66**A memorized at the SRAM **66**, which is the high-speed memory.

[0064] Therefore, when the continuous photography mode or the video photography mode is specified, because only the continuous defect correction LUT **66**A which has been extracted to the SRAM **66**, which is the high-speed memory, is read, a duration of reading of information relating to defective pixels can be restrained from becoming a problem. In addition, because it is possible to correct image data corresponding to defective pixels that occur at continuous positions, it is possible to correct image data corresponding to position information which represents the continuous defective pixels, which have a greater effect on image quality.

[0065] Moreover, at times of the still photography mode which obtains image data of still images, which have higher requirements for acquisition of high-quality image data, on the basis of position information representing defective pixels stored at both the continuous defect correction LUT **66**A and the isolated defect correction LUT **78**A, which is to say all defective pixels of the CCD **50**, it is possible to perform the defective pixel correction processing on corresponding image data.

[0066] Accordingly, it is possible to restrain a duration of reading of information relating to defective pixels from becoming a problem, and it is possible to perform correction of defective pixels with high efficiency in accordance with conditions of photography.

[0067] Now, for the present embodiment, a case has been described in which both the continuous defect correction LUT **66**A and the isolated defect correction LUT **78**A are memorized at the EEPROM **80** without compression processing or the like being performed, and are extracted to the SRAM **66** and the SDRAM **78**, respectively, when power of the digital camera **10** is turned on. However, it is also possible to compress the isolated defect correction LUT **78**A and memorize the isolated defect correction LUT **78**A at the EEPROM **80** beforehand and, when the power of the digital camera **10** is turned on, to extract the isolated defect correction LUT **78**A to the SDRAM **78** in the compressed state. In this case, when the defective pixel position information is being read in the above-mentioned step **118**, the compressed isolated defect correction LUT **78**A that has been memorized in the SDRAM **78**, which is the low-speed memory, may be decompressed and the defective pixel position information thereof subsequently read in. In such a case, it is possible to avoid memory shortages at the EEPROM **80** due to the isolated defect correction LUT **78**A. Furthermore, the compressed isolated defect correction LUT **78**A is not used when the continuous photography mode and video photography mode requiring rapid image processing are set, but is decompressed for use only when the ordinary still photography mode is set, which, in comparison with the continuous photography mode and the video photography mode, does not require high-speed processing. Therefore, a duration required for decompression processing of the isolated defect correction LUT **78**A can be restrained from having any effect on speeds of processing of image data in the digital camera **10**.

Second Embodiment

[0068] For the first embodiment described above, a case has been described of performing pixel correction of defective pixels which have static characteristics, at which generated noise components are substantially constant irrespective of the length of a duration of exposure. For the present embodiment however, a case will be described of performing correction on both defective pixels which have dynamic characteristics, such as thermal white flaws and the like at which the amount of a noise component which is generated by a defective pixel increases as an exposure duration becomes longer, and defective pixels having static characteristics, as have been discussed for the above-described first embodiment.

[0069] Furthermore, for the first embodiment described above, respective memorization of the continuous defect correction LUT **66**A and the isolated defect correction LUT **78**A as a plurality of LUTs at the EEPROM **80** has been described. For the present embodiment however, prior memorization of a usual correction LUT **66**B and a long-exposure correction LUT **78**B, as shown in **FIG. 4A**, will be described.

[0070] In the usual correction LUT **66**B, correction information for correcting, of defective pixels that have arisen at the CCD **50**, defective pixels for which generated amounts of noise components caused by the defective pixels are at levels capable of causing image deterioration even at short exposures, of less than a predetermined duration, is memorized as position information representing positions of those defective pixels. In the long-exposure correction LUT **78**B, correction information for correcting defective pixels for

which generated amounts of noise components are larger for longer exposure durations is memorized as position information representing positions of these defective pixels.

[0071] Next, operations of a digital camera **11** relating to the present embodiment will be described.

[0072] **FIG. 5** shows a processing routine which is executed by the CPU **82**. When power to the digital camera **11** is turned on by the power switch **30**, the sequence proceeds to step **200**, the usual correction LUT **66**B memorized at the EEPROM **80** is extracted to the SRAM **66**, which is a high-speed memory, and the long-exposure correction LUT **78**B is extracted to the SDRAM **78**, which is a lower-speed memory than the SRAM **66**.

[0073] Then, the processing from step **102** to step **107** is executed in a similar manner to the first embodiment described above. After the aperture value and shutter speed have been set to serve as exposure control values, image capture processing is executed, in which an accumulation duration for charge to be accumulated at the photoelectric conversion elements corresponding to the pixels of the CCD **50** is controlled by the electronic shutter function of the CCD **50** so as to match the shutter speed set in step **104**, and charge that is transferred from the photoelectric conversion elements is sequentially outputted from the CCD **50**, then converted to digital data by the A/D converter **54** and inputted to the main control section **60** to serve as image data. Thus, image data of a photographic image is obtained.

[0074] Next, in step **206**, an exposure duration according to the shutter speed set by the processing of step **104** is read in. Here, the exposure duration may be set by instructive operation of the mode dial **34** by a user, and a thus-specified value can be read in.

[0075] Next, in step **208**, it is determined whether or not the exposure duration corresponding to the shutter speed specified in step **104** is less than a predetermined duration, which has been specified beforehand. If the judgement is positive, the sequence proceeds to step **209**. The previously specified predetermined duration represents a threshold value of exposure duration at which, at the defective pixels stored in the long-exposure correction LUT **78**B, a generated value of a noise component, which increases as the exposure duration becomes longer, reaches a level which can affect image quality.

[0076] Next, in step **209**, the position information representing positions of defective pixels that is stored in the usual correction LUT **66**B memorized at the SRAM **66**, which is the high-speed memory, is read in.

[0077] In a subsequent step **210**, defective pixel correction processing of the photographic image image data acquired in step **107** is executed in a similar manner to the aforementioned step **114**, on the basis of the position information representing positions of defective pixels that has been stored in the usual correction LUT **66**B memorized at the SRAM **66**, which is the high-speed memory, which information was read in in step **209**.

[0078] Next, in step **211**, the photographic image image data which has been subjected to defective pixel correction processing is subjected to image processing for implementing predetermined digital signal processing. Then, in a subsequent step **212**, the photographic image image data which has been subjected to the defective pixel correction processing and the predetermined image signal processing is subjected to various image processes, and memory processing is executed to memorize the image data at the recording media **18**. Subsequently, the present routine ends.

[0079] On the other hand, if the judgement in step **208** is negative, with the exposure duration corresponding to the shutter speed that was read in step **206** being greater than or equal to the predetermined duration, the sequence proceeds to step **214** and reads in both the position information representing positions of defective pixels which is stored in the usual correction LUT **66**B memorized at the SRAM **66**, which is the high-speed memory, and the position information representing positions of defective pixels which is stored in the long-exposure correction LUT **78**B memorized at the SDRAM **78**, which is the low-speed memory.

[0080] Then, in step **216**, in a similar manner to the processing of the above-described step **214**, of the image data obtained in step **107**, defective pixel correction processing is carried out on image data that corresponds to position information of defective pixels, on the basis of the position information of defective pixels stored in the usual correction LUT **66**B and long-exposure correction LUT **78**B which were read in in step **214**. Then, the sequence proceeds to step **211**.

[0081] Here, the processing of steps **210** and **216** corresponds to functioning of the correction unit of the image capture device of the present invention.

[0082] As has been described above, in the digital camera **11** of the present embodiment, when a specified exposure duration is greater than or equal to the predetermined duration, which is a threshold value of exposure duration at which generated amounts of noise components due to defective pixels which are dynamic defect factors—at which generated amounts of noise components due to the defective pixels increase as the exposure duration gets longer—reach a level which would affect image quality, the defective pixel correction processing is carried out on the basis of both the defective pixel position information that is stored in the long-exposure correction LUT **78**B stored at the SDRAM **78**, which is a low-speed memory, and the defective pixel position information that is stored in the usual correction LUT **66**B memorized at the SRAM **66**, which is the high-speed memory. When the specified exposure duration is shorter than the predetermined duration, the defective pixel correction processing is carried out on the basis of the defective pixel position information that is stored in the usual correction LUT **66**B stored at the SRAM **66**, which is the high-speed memory.

[0083] Thus, when an exposure duration is short, the defective pixel correction processing is executed in accordance with the position information of defective pixels that is stored at the usual correction LUT **66**B, which is stored at the SRAM **66** which is the high-speed memory, and when an exposure duration is long, the defective pixel correction processing is carried out in accordance with the pixel information of defective pixels that is stored at the long-exposure correction LUT **78**B, which is stored at the SDRAM **78** which is the low-speed memory. Therefore, a duration of reading of information relating to defective pixels can be restrained from becoming a problem. In

addition, it is possible to perform correction processing of defective pixels in accordance with conditions of photography.

[0084] Moreover, it is possible to carry out corrections of defective pixels without causing reductions in processing speeds but with high efficiency in accordance with conditions of photography.

[0085] Now, for the present embodiment, a case has been described in which both the usual correction LUT **66**B and the long-exposure correction LUT **78**B are memorized at the EEPROM **80** without compression processing or the like being performed, and are extracted to the SRAM **66** and the SDRAM **78**, respectively, when power of the digital camera **11** is turned on. However, it is also possible to compress the long-exposure correction LUT **78**B and memorize the long-exposure correction LUT **78**B at the EEPROM **80** beforehand and, when the power of the digital camera **11** is turned on, to extract the long-exposure correction LUT **78**B to the SDRAM **78** in the compressed state. In this case, when the judgement in the above-mentioned step **208** is negative and the defective pixel position information is being read in step **214**, the compressed long-exposure correction LUT **78**B that has been memorized in the SDRAM **78**, which is the low-speed memory, may be decompressed and the defective pixel position information thereof subsequently read in. In such a case, it is possible to avoid memory shortages at the EEPROM **80** due to the long-exposure correction LUT **78**B. Furthermore, the compressed long-exposure correction LUT **78**B is not used at times of usual photography for which exposure durations are short, but is decompressed only when it is determined that the photography has a long exposure duration, which exposure duration is longer than the predetermined duration. Thus, processing for decompression of the long-exposure correction LUT **78**B can be restrained from having any effect on speeds of other image data processes at times of image capture.

[0086] Further, for the present embodiment, a case has been described in which the exposure duration is automatically specified as a duration according to a shutter speed which is set by AE control, which is executed when the release switch **32** is half-pressed. However, it is also possible to set the exposure duration from setting of the mode dial **34** by a user. In such a case, in the processing of step **206**, it is sufficient for the exposure duration to be read in by reading a shutter speed value that has been set at the mode dial **34**.

[0087] Further, for the present embodiment, a case has been described in which it is determined whether or not a specified exposure duration is less than the predetermined duration in the determination of step **208**. If the exposure duration is less than the predetermined duration, defective pixel correction processing is carried out in accordance with the pixel information of defective pixels that is stored at the usual correction LUT **66**B, which is stored at the SRAM **66** which is the high-speed memory, and if the exposure duration is more than the predetermined duration, the defective pixel correction processing is carried out in accordance with the pixel information of defective pixels that is stored at the long-exposure correction LUT **78**B, which is stored at the SDRAM **78** which is the low-speed memory. However, it is also possible to further provide an image quality priority mode as one of photography modes of the digital camera **11** beforehand, which mode, when the various signal processes are performed, performs signal processing on the image data which has been subjected to defective pixel correction processing so as to produce image data of a higher image quality. When this image quality priority mode is specified, the sequence proceeds from step **208** to step **214**, and when a mode other than the image quality priority mode is specified, the sequence proceeds to step **209**. In a case in which this further signal processing for producing image data with higher image quality is performed on the defective pixel correction-processed image data, it can be expected that a longer time will be required for signal processing in step **211** than in a case in which the signal processing for producing image data with higher image quality is not performed. Therefore, when in the image quality priority mode, it is possible, by employing the usual correction LUT **66**B and the long-exposure correction LUT **78**B which are memorized at the high-speed memory and the low-speed memory, respectively, to carry out defective pixel correction processing with image quality prioritized over speed.

What is claimed is:

1. An image capture device comprising:

an image capture unit including a solid-state image capture component, which is equipped with a plurality of photoelectric conversion elements for photoelectrically converting light in accordance with a subject, the image capture unit providing image data of a photographic image of the subject with the solid-state image capture component;

a first memory unit, which memorizes position information of each of non-contiguous defective pixels at the solid-state image capture component;

a second memory unit, with a higher access rate than the first memory unit, which memorizes position information of each of contiguous defective pixels at the solid-state image capture component;

a mode setting unit, at which mode information representing a photography mode is set; and

a correction unit which corrects the image data,

wherein,

when the mode information set at the mode setting unit represents one of a continuous photography mode for providing image data of a series of photographic images and a video photography mode for providing image data of a moving image, the correction unit corrects, of the image data provided by the image capture unit, image data that corresponds to defective pixels according to the position information memorized at the second memory unit, and

when the mode information set at the mode setting unit represents a still photography mode for providing image data of a still image, the correction unit corrects, of the image data provided by the image capture unit, image data that corresponds to defective pixels according to the position information memorized at the second memory unit and the position information memorized at the first memory unit.

2. The image capture device of claim 1, wherein the position information of non-contiguous defective pixels is compressed for memorization at the first memory unit, and, when the mode information represents the still photography

mode, the correction unit corrects, of the image data provided by the image capture unit, image data that corresponds to defective pixels according to the position information memorized at the second memory unit and position information which is decompressed from the compressed defective pixel position information which has been memorized at the first memory unit.

3. The image capture device of claim 1, wherein the correction by the correction unit of image data that corresponds to defective pixels includes interpolating the image data that corresponds to the defective pixels from image data of pixels around the defective pixels.

4. An image capture device comprising:

an image capture unit, which provides image data of a photographic image with a solid-state image capture component, which is equipped with a plurality of photoelectric conversion elements for photoelectrically converting light in accordance with a subject;

a first memory unit, which memorizes position information of first defective pixels at the solid-state image capture component, a noise component which is included in image data corresponding to these defective pixels being larger for a longer exposure duration of the solid-state image capture component;

a second memory unit, with a higher access rate than the first memory unit, which memorizes position information of second defective pixels at the solid-state image capture component, a noise component which is included in image data corresponding to these defective pixels being constant with respect to changes of the exposure duration of the solid-state image capture component;

a duration information provision unit, which provides information representing the exposure duration of the solid-state image capture component; and

a correction unit which corrects the image data,

wherein,

when the exposure duration information provided by the duration information provision unit represents an exposure duration greater than or equal to a predetermined duration, the correction unit corrects, of the image data provided by the image capture unit, image data that corresponds to defective pixels according to the position information memorized at the first memory unit and the position information memorized at the second memory unit, and

when the exposure duration information provided by the duration information provision unit represents an exposure duration less than the predetermined duration, the correction unit corrects, of the image data provided by the image capture unit, image data that corresponds to defective pixels according to the position information memorized at the second memory unit.

5. The image capture device of claim 4, wherein the position information of the defective pixels at which the noise component increases with exposure duration is compressed for memorization at the first memory unit, and, when the exposure duration information represents an exposure duration less than the predetermined duration, the correction unit corrects, of the image data provided by the image capture unit, image data that corresponds to defective pixels according to the position information memorized at the second memory unit and position information which is decompressed from the compressed defective pixel position information which has been memorized at the first memory unit.

6. The image capture device of claim 4, further comprising a mode setting unit for setting at least two photography modes with different image qualities, wherein, when mode information representing a photography mode that has been set at the mode setting unit is information which represents a high image quality mode, for correcting the image data provided by the image capture unit so as to produce image data of higher image quality, the correction unit corrects, of the image data provided by the image capture unit, image data that corresponds to defective pixels according to the position information memorized at the first memory unit and the position information memorized at the second memory unit.

7. An image capture device which is settable to at least two different photography modes, the image capture device comprising:

an image capture unit including a solid-state image capture component which is equipped with a plurality of photoelectric conversion elements, the image capture unit generating image data with the solid-state image capture component;

a first memory unit, which memorizes position information of each of non-contiguous defective pixels at the solid-state image capture component;

a second memory unit, with a higher access rate than the first memory unit, which memorizes position information of each of contiguous defective pixels at the solid-state image capture component; and

a correction unit which corrects the image data,

wherein,

when a photography mode is one of a continuous photography mode for providing image data of a series of photographic images and a video photography mode for providing image data of a moving image, the correction unit corrects the image data on the basis of the position information of defective pixels memorized at the second memory unit, and

when the photography mode is a still photography mode for providing image data of a still image, the correction unit corrects the image data on the basis of the position information memorized at the second memory unit and the position information memorized at the first memory unit.

8. The image capture device of claim 7, wherein the position information of non-contiguous defective pixels is compressed for memorization at the first memory unit, and, when the photography mode is the still photography mode, the correction unit decompresses the compressed position information of defective pixels for correcting the image data.

9. The image capture device of claim 7, wherein the correction by the correction unit of image data that corresponds to defective pixels includes interpolating the image data that corresponds to the defective pixels from image data of pixels around the defective pixels.

10. An image capture device comprising:

an image capture unit including a solid-state image capture component which is equipped with a plurality of photoelectric conversion elements, the image capture unit generating image data with the solid-state image capture component;

a first memory unit, which memorizes position information of defective pixels at the solid-state image capture component, a noise component which is included in image data corresponding to these defective pixels being larger for a longer exposure duration of the solid-state image capture component;

a second memory unit, with a higher access rate than the first memory unit, which memorizes position information of defective pixels at the solid-state image capture component, a noise component which is included in image data corresponding to these defective pixels being non-dependent on the exposure duration of the solid-state image capture component; and

a correction unit which corrects the image data,

wherein,

when the exposure duration of the solid-state image capture component is greater than or equal to a previously specified duration, the correction unit corrects the image data on the basis of the position information memorized at the first memory unit and the position information memorized at the second memory unit, and

when the exposure duration is less than the previously specified duration, the correction unit corrects the image data on the basis of the position information memorized at the second memory unit.

11. The image capture device of claim 10, wherein the position information of the defective pixels at which the noise component increases with exposure duration is compressed for memorization at the first memory unit, and, when the exposure duration is less than the previously specified duration, the correction unit decompresses the compressed position information of defective pixels and corrects image data that corresponds to the defective pixels.

12. The image capture device of claim 10, further comprising a mode setting unit at which at least two photography modes with different image qualities are settable, wherein, when a photography mode with relatively high image quality is set, the correction unit corrects the image data on the basis of the position information of defective pixels memorized at the first memory unit and the second memory unit.

13. An image data correction process for an image capture device which includes a solid-state image capture component and is provided with at least two different photography modes, the process comprising the steps of:

memorizing, at a first memory unit, position information of each of non-contiguous defective pixels at the solid-state image capture component;

memorizing, at a second memory unit with a higher access rate than the first memory unit, position information of each of contiguous defective pixels at the solid-state image capture component;

generating image data with the solid-state image capture component; and

correcting the image data, including

when a photography mode is one of a continuous photography mode for providing image data of a series of photographic images and a video photography mode for providing image data of a moving image, correcting the image data on the basis of the position information of defective pixels memorized at the second memory unit, and

when the photography mode is a still photography mode for providing image data of a still image, correcting the image data on the basis of the position information memorized at the second memory unit and the position information memorized at the first memory unit.

14. An image data correction process for an image capture device which includes a solid-state image capture component, the process comprising the steps of:

memorizing, at a first memory unit, position information of defective pixels at the solid-state image capture component, image data corresponding to these defective pixels including a noise component which is larger for a longer exposure duration of the solid-state image capture component;

memorizing, at a second memory unit with a higher access rate than the first memory unit, position information of defective pixels at the solid-state image capture component, image data corresponding to these defective pixels including a noise component which is not dependent on the exposure duration of the solid-state image capture component; generating image data with the solid-state image capture component; and

correcting the image data, including

when an exposure duration of the solid-state image capture component is greater than or equal to a previously specified duration, correcting the image data on the basis of the position information memorized at the first memory unit and the position information memorized at the second memory unit, and

when the exposure duration is less than the previously specified duration, correcting the image data on the basis of the position information memorized at the second memory unit.

* * * * *