US 20040032490A1

(19) United States

(12) Patent Application Publication (10) Pub. No.: US 2004/0032490 A1

Uchida (43) Pub. Date: Feb. 19, 2004

(54) IMAGE SENSING APPARATUS, IMAGE SENSING METHOD, PROGRAM, AND STORAGE MEDIUM

(76) Inventor: **Mineo Uchida**, Kanagawa (JP)

Correspondence Address:
MORGAN & FINNEGAN, L.L.P.
345 PARK AVENUE
NEW YORK, NY 10154 (US)

(21) Appl. No.: **10/439,766**

(22) Filed: **May 16, 2003**

Related U.S. Application Data

(63) Continuation of application No. 09/867,355, filed on May 29, 2001, now Pat. No. 6,580,451.

(30) **Foreign Application Priority Data**

May 17, 2002 (JP) ..... 2002-143136 (PAT.

Publication Classification

(51) **Int. Cl.**[7] **H04N 5/253**; H04N 9/47

(52) **U.S. Cl.** **348/96**; 348/265

(57) **ABSTRACT**

If photographing conditions such as the ISO speed or shutter speed or environmental conditions such as the ambient temperature require no dark image data during photography, an AF operation and AE operation are performed when a shutter switch **SW1** is pressed, and photography is performed when a shutter switch **SW2** is pressed after that, without performing any dark loading, in both single shot photography and continuous photography. In development, horizontal dark shading correction is performed using one-dimensional correction data. This one-dimensional correction data of one horizontal line for use in the horizontal dark shading correction is formed by performing a projective arithmetic operation for an image which is obtained by dark photography and stored in a nonvolatile memory **56** in a production process.

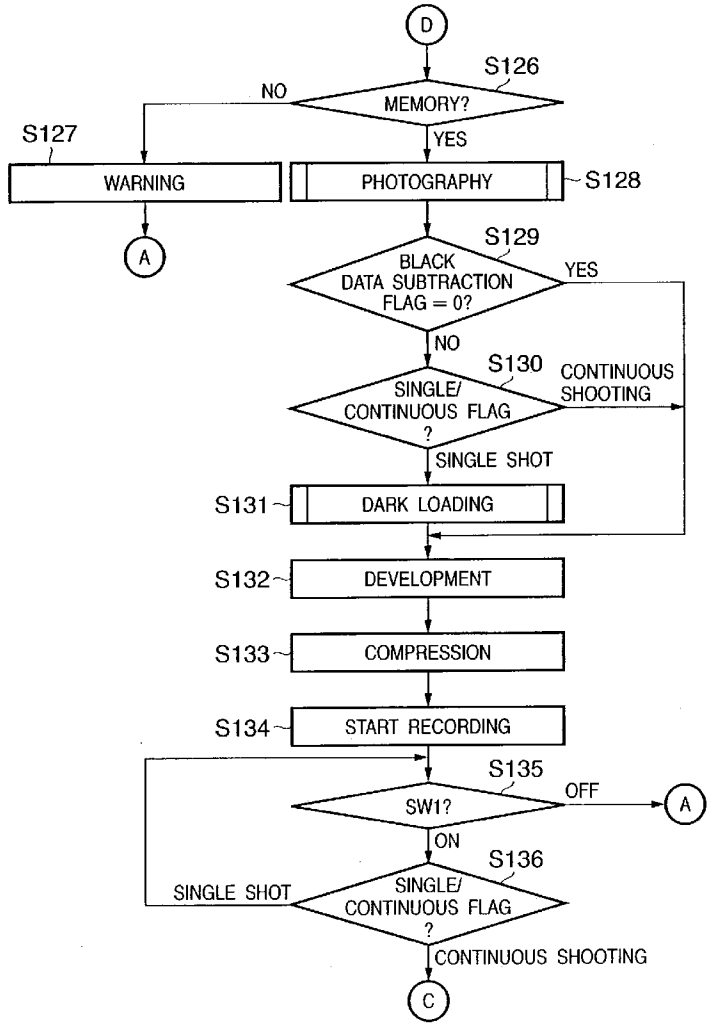

FIG. 1

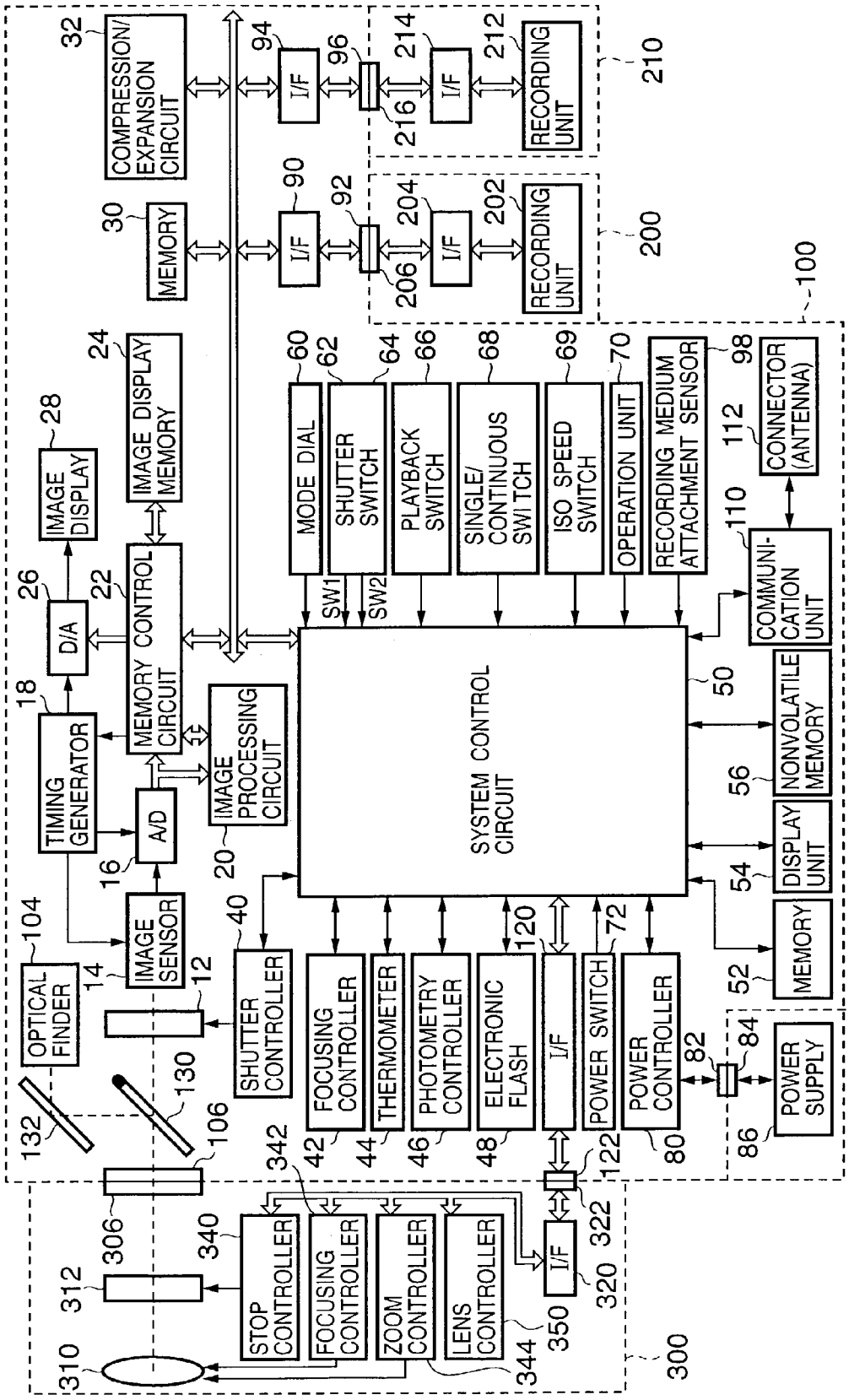
COMPRESSION/ EXPANSION CIRCUIT
MEMORY
I/F
RECORDING UNIT
IMAGE DISPLAY
IMAGE DISPLAY MEMORY
D/A
MEMORY CONTROL CIRCUIT
TIMING GENERATOR
A/D
IMAGE PROCESSING CIRCUIT
IMAGE SENSOR
OPTICAL FINDER
SHUTTER CONTROLLER
MODE DIAL
SHUTTER SWITCH
PLAYBACK SWITCH
SINGLE/ CONTINUOUS SWITCH
ISO SPEED SWITCH
OPERATION UNIT
RECORDING MEDIUM ATTACHMENT SENSOR
CONNECTOR (ANTENNA)
COMMUNI-CATION UNIT
SYSTEM CONTROL CIRCUIT
NONVOLATILE MEMORY
DISPLAY UNIT
MEMORY
FOCUSING CONTROLLER
THERMOMETER
PHOTOMETRY CONTROLLER
ELECTRONIC FLASH
POWER SWITCH
POWER CONTROLLER
POWER SUPPLY
STOP CONTROLLER
FOCUSING CONTROLLER
ZOOM CONTROLLER
LENS CONTROLLER
SW1
SW2
100
200
210
300

FIG. 2

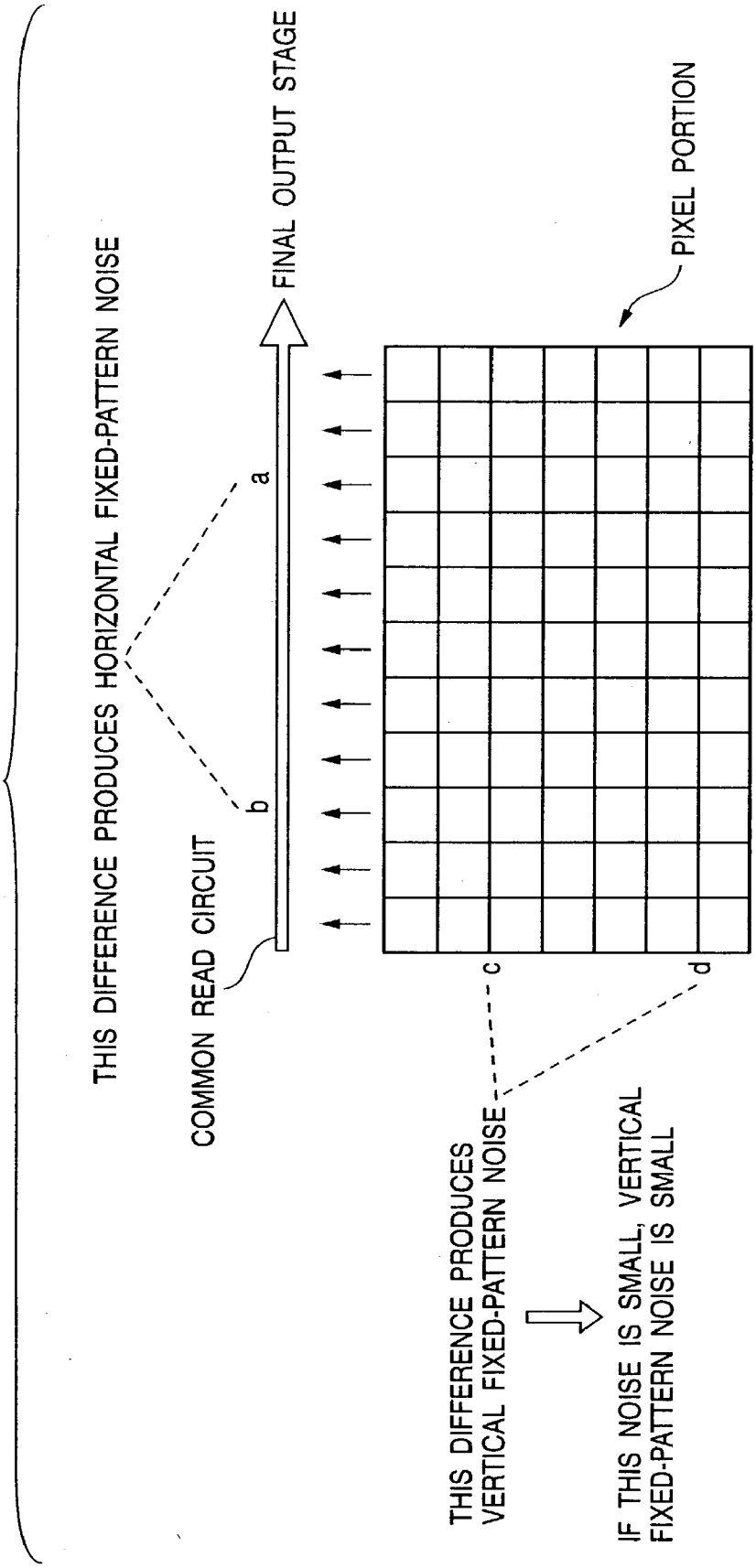
THIS DIFFERENCE PRODUCES HORIZONTAL FIXED-PATTERN NOISE
COMMON READ CIRCUIT
FINAL OUTPUT STAGE
PIXEL PORTION
a
b
c
d
THIS DIFFERENCE PRODUCES VERTICAL FIXED-PATTERN NOISE
IF THIS NOISE IS SMALL, VERTICAL FIXED-PATTERN NOISE IS SMALL

FIG. 3

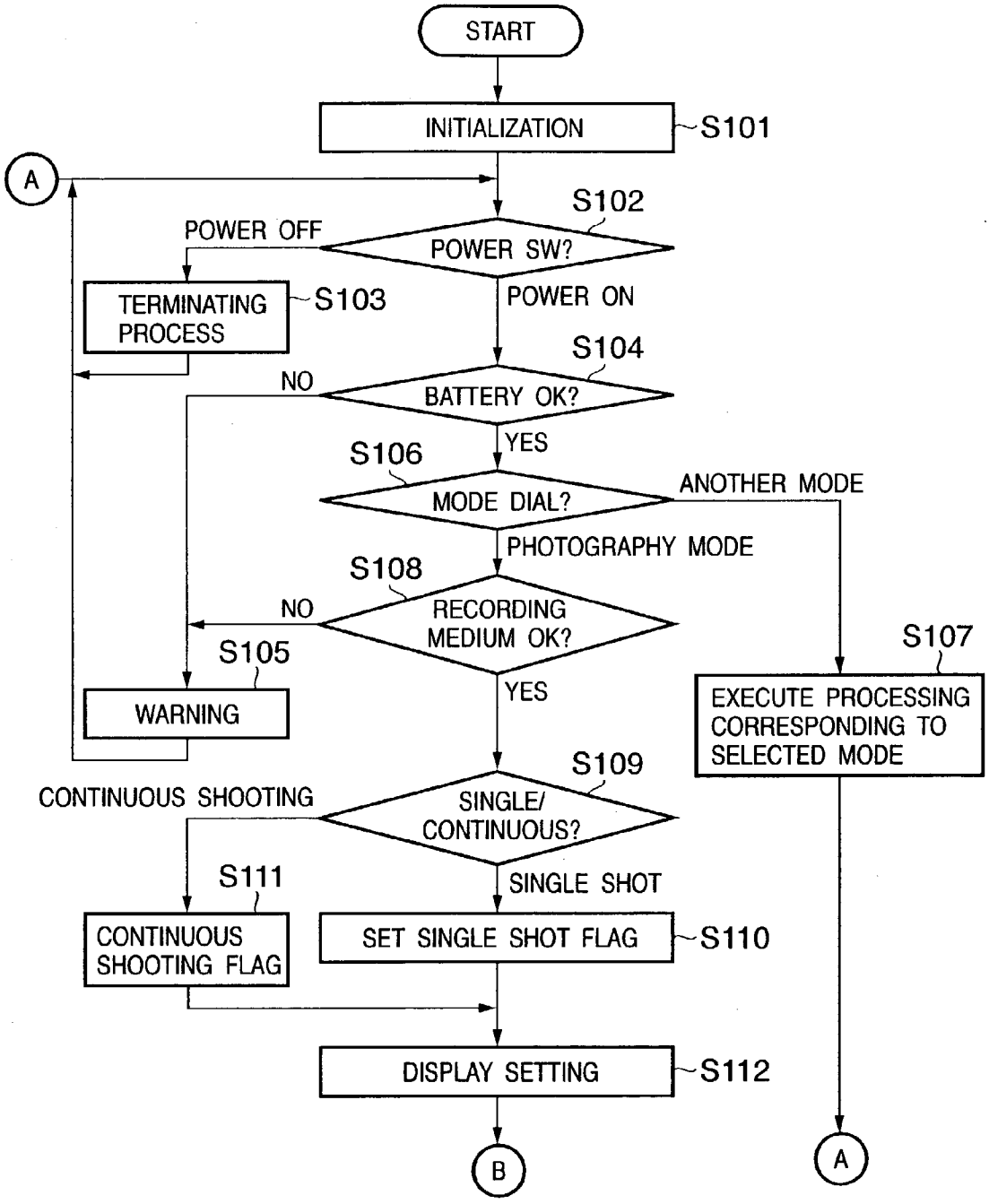
START
INITIALIZATION
S101
A
S102
POWER OFF
POWER SW?
TERMINATING PROCESS
S103
POWER ON
S104
NO
BATTERY OK?
YES
S106
MODE DIAL?
ANOTHER MODE
PHOTOGRAPHY MODE
S108
NO
RECORDING MEDIUM OK?
S105
WARNING
YES
S107
EXECUTE PROCESSING CORRESPONDING TO SELECTED MODE
S109
CONTINUOUS SHOOTING
SINGLE/ CONTINUOUS?
S111
SINGLE SHOT
CONTINUOUS SHOOTING FLAG
SET SINGLE SHOT FLAG
S110
DISPLAY SETTING
S112
B
A

FIG. 4

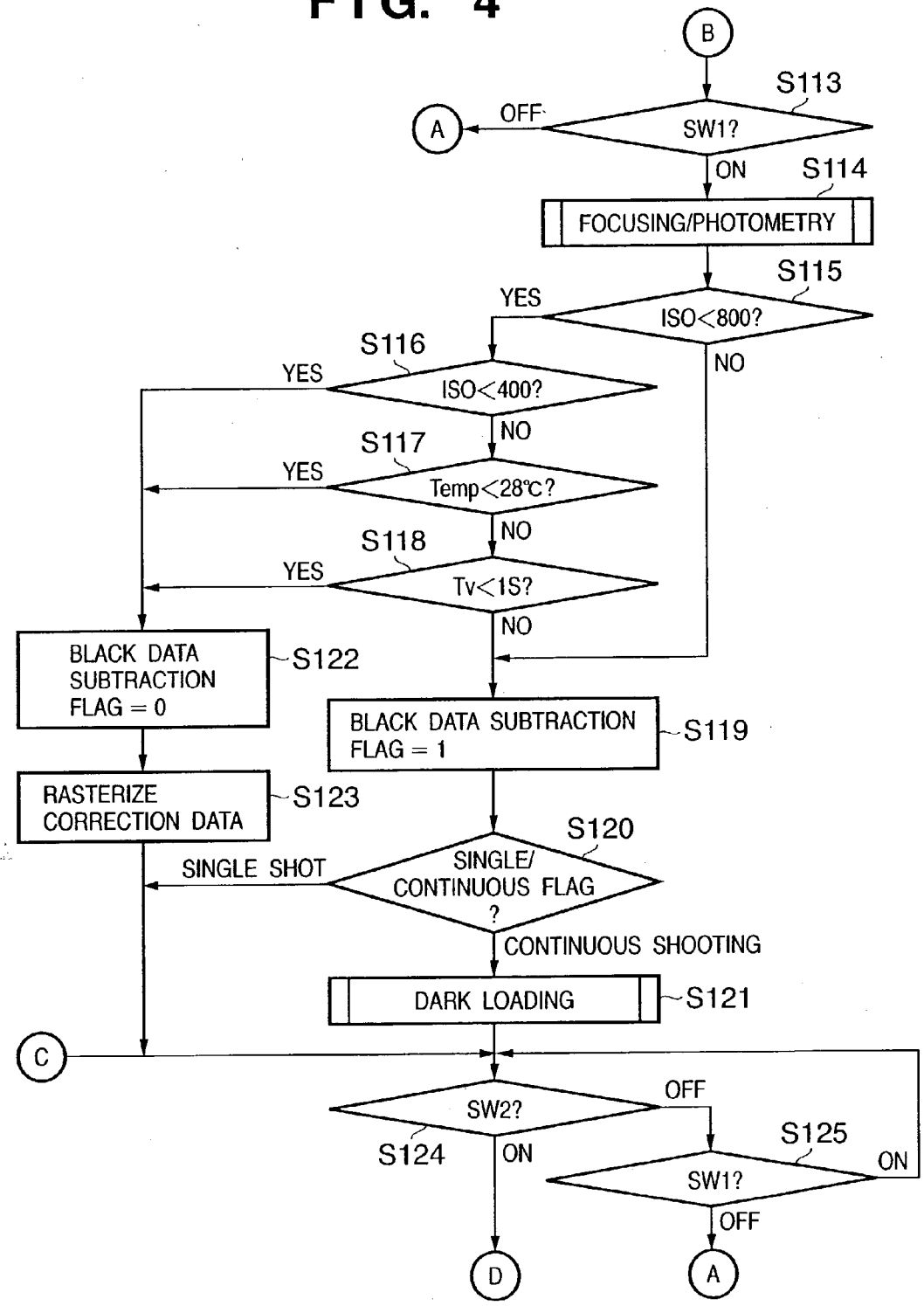
B
S113
SW1?
OFF
A
ON
S114
FOCUSING/PHOTOMETRY
S115
ISO<800?
YES
NO
S116
ISO<400?
YES
NO
S117
Temp<28℃?
YES
NO
S118
Tv<1S?
YES
NO
BLACK DATA SUBTRACTION FLAG = 0
S122
BLACK DATA SUBTRACTION FLAG = 1
S119
RASTERIZE CORRECTION DATA
S123
S120
SINGLE/ CONTINUOUS FLAG ?
SINGLE SHOT
CONTINUOUS SHOOTING
DARK LOADING
S121
C
SW2?
OFF
S124
ON
S125
SW1?
ON
OFF
D
A

FIG. 5

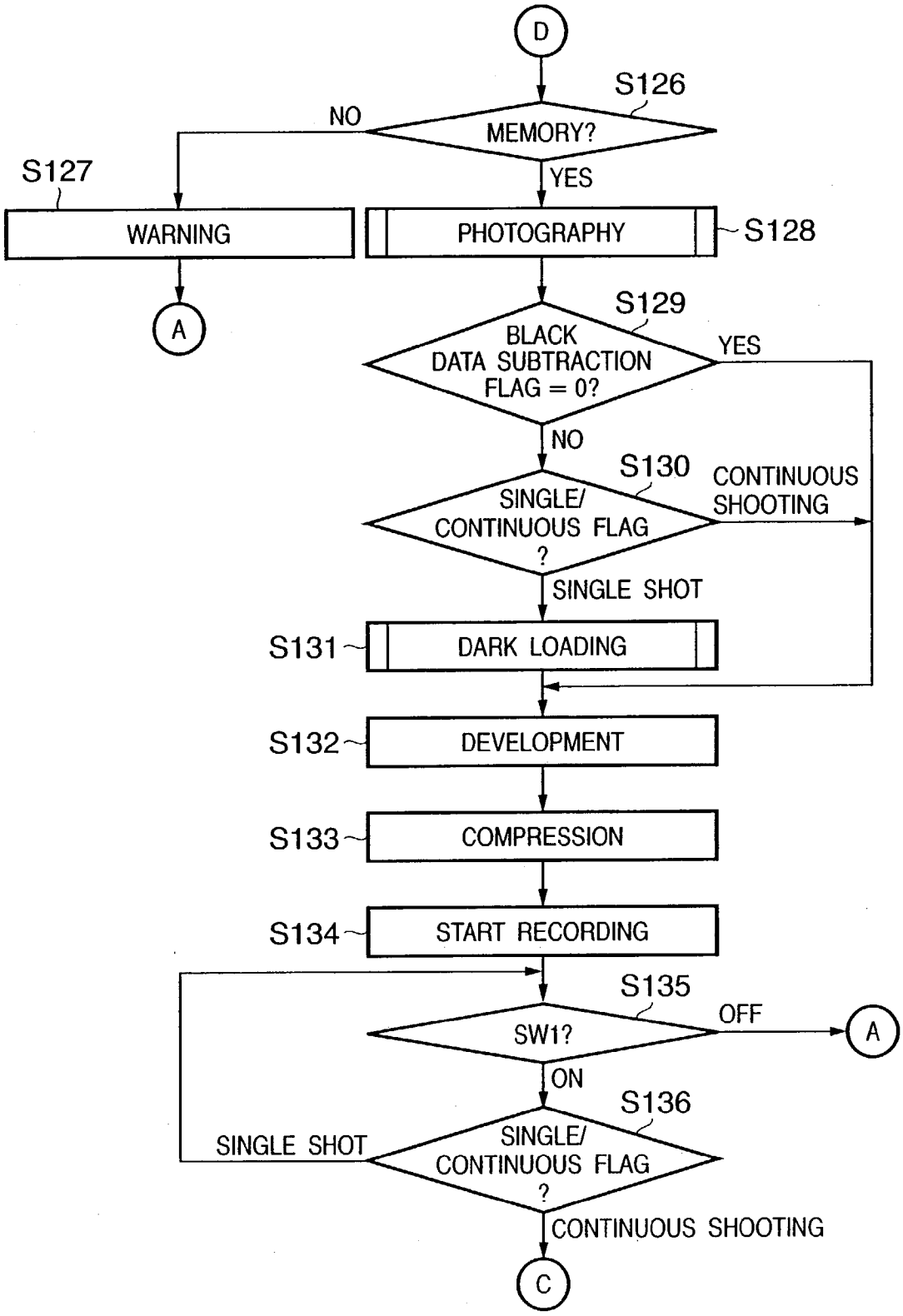
D
S126
MEMORY?
NO
YES
S127
WARNING
PHOTOGRAPHY
S128
A
S129
BLACK DATA SUBTRACTION FLAG = 0?
YES
NO
S130
SINGLE/ CONTINUOUS FLAG ?
CONTINUOUS SHOOTING
SINGLE SHOT
S131
DARK LOADING
S132
DEVELOPMENT
S133
COMPRESSION
S134
START RECORDING
S135
SW1?
OFF
A
ON
S136
SINGLE/ CONTINUOUS FLAG ?
SINGLE SHOT
CONTINUOUS SHOOTING
C

FIG. 6

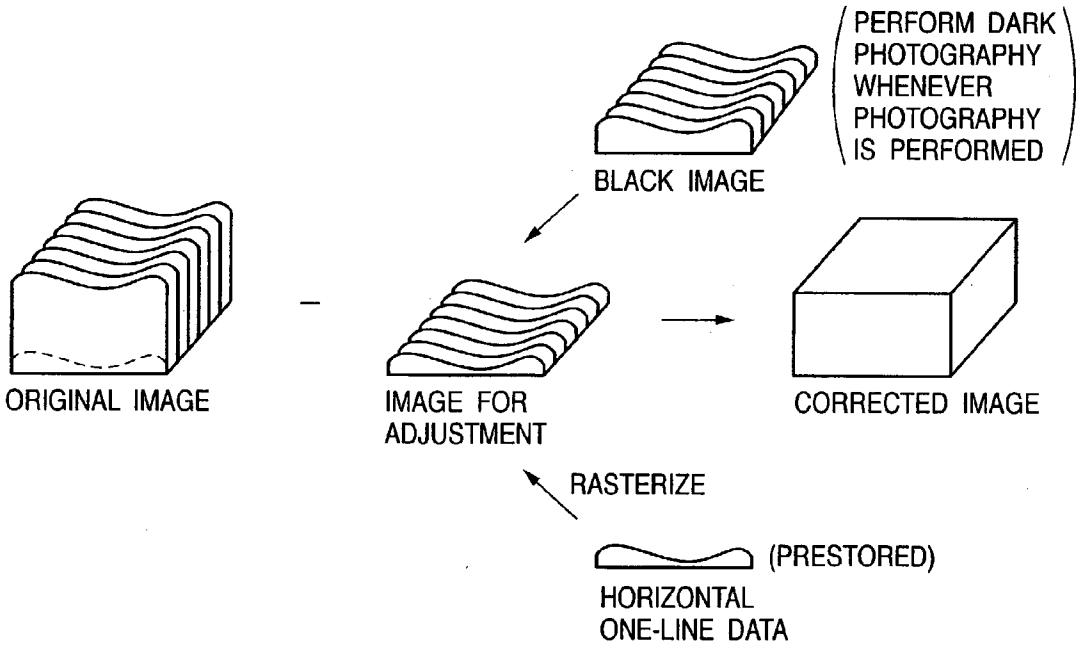
PERFORM DARK PHOTOGRAPHY WHENEVER PHOTOGRAPHY IS PERFORMED
BLACK IMAGE
ORIGINAL IMAGE
IMAGE FOR ADJUSTMENT
CORRECTED IMAGE
RASTERIZE
(PRESTORED)
HORIZONTAL ONE-LINE DATA

FIG. 7

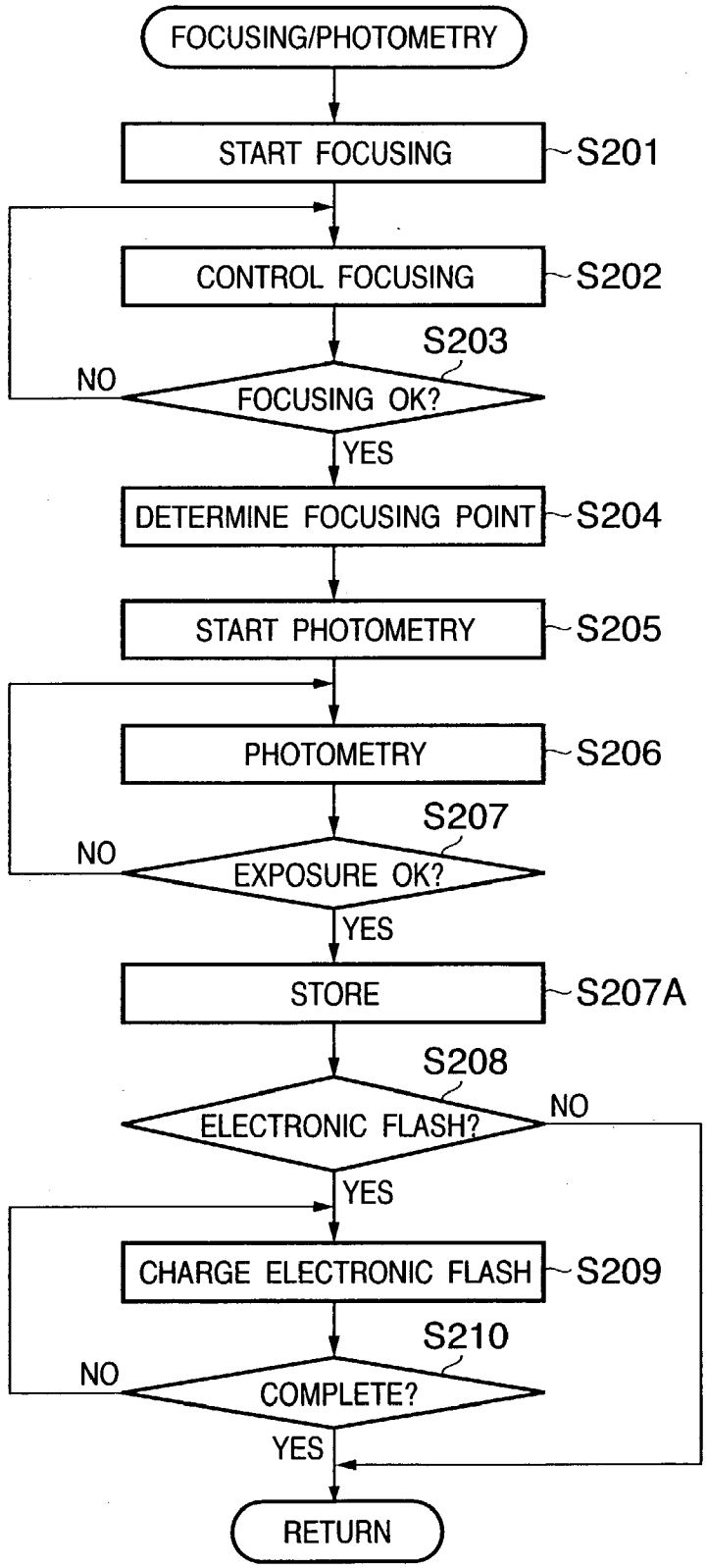
FOCUSING/PHOTOMETRY
START FOCUSING
S201
CONTROL FOCUSING
S202
S203
NO
FOCUSING OK?
YES
DETERMINE FOCUSING POINT
S204
START PHOTOMETRY
S205
PHOTOMETRY
S206
S207
NO
EXPOSURE OK?
YES
STORE
S207A
S208
ELECTRONIC FLASH?
NO
YES
CHARGE ELECTRONIC FLASH
S209
S210
NO
COMPLETE?
YES
RETURN

FIG. 8

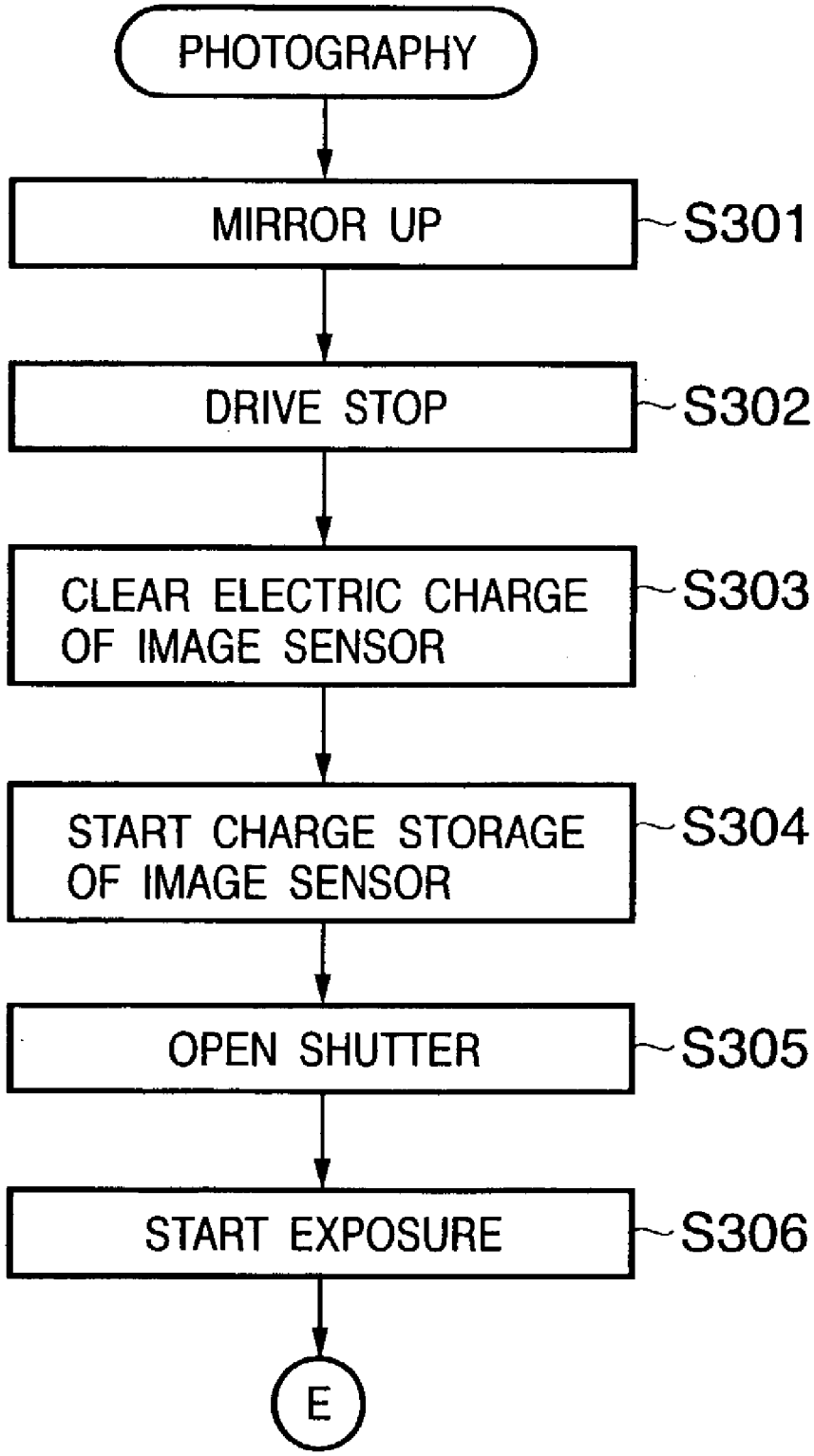
PHOTOGRAPHY
MIRROR UP
S301
DRIVE STOP
S302
CLEAR ELECTRIC CHARGE OF IMAGE SENSOR
S303
START CHARGE STORAGE OF IMAGE SENSOR
S304
OPEN SHUTTER
S305
START EXPOSURE
S306
E

FIG. 9

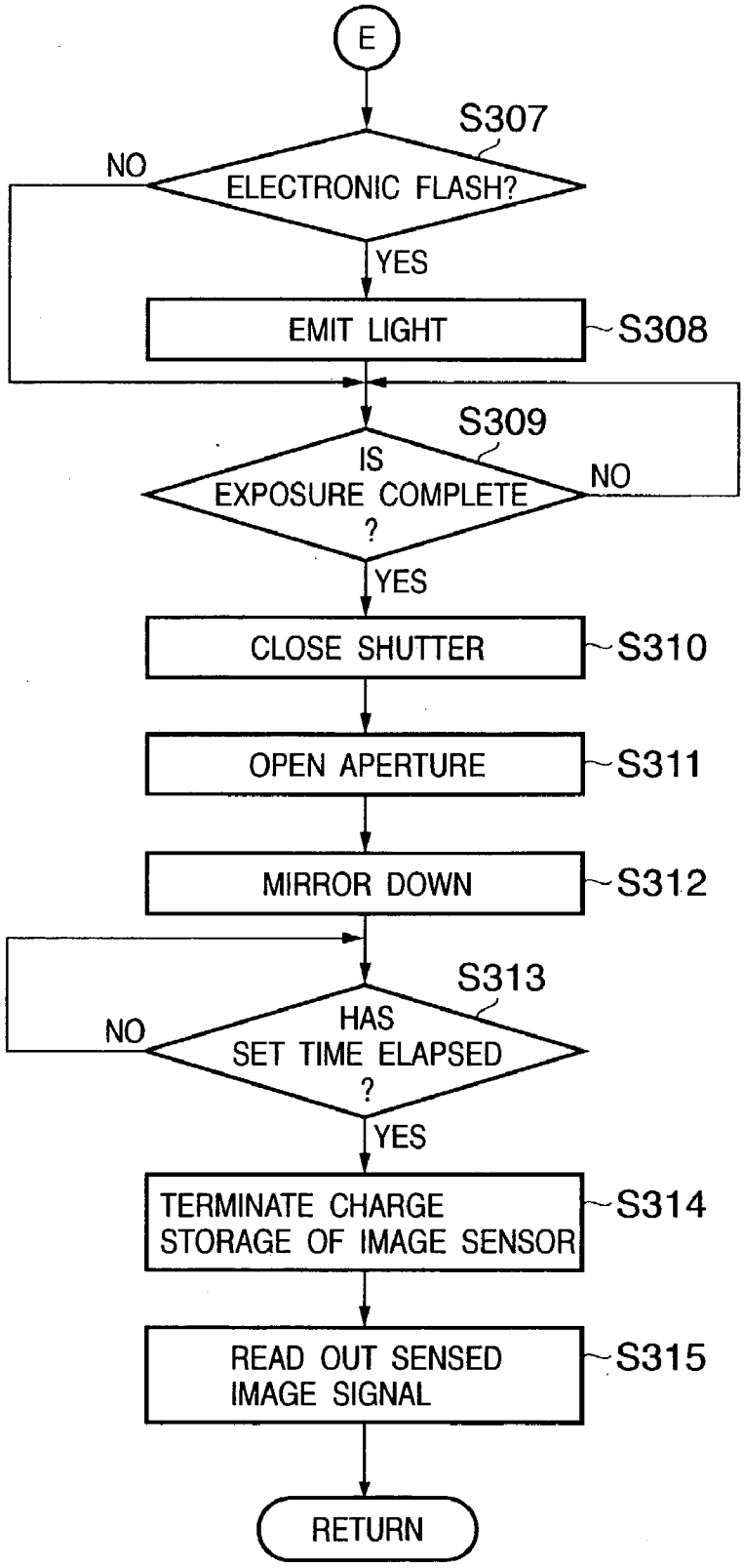
E
S307
ELECTRONIC FLASH?
NO
YES
EMIT LIGHT
S308
S309
IS EXPOSURE COMPLETE ?
NO
YES
CLOSE SHUTTER
S310
OPEN APERTURE
S311
MIRROR DOWN
S312
S313
HAS SET TIME ELAPSED ?
NO
YES
TERMINATE CHARGE STORAGE OF IMAGE SENSOR
S314
READ OUT SENSED IMAGE SIGNAL
S315
RETURN

FIG. 10

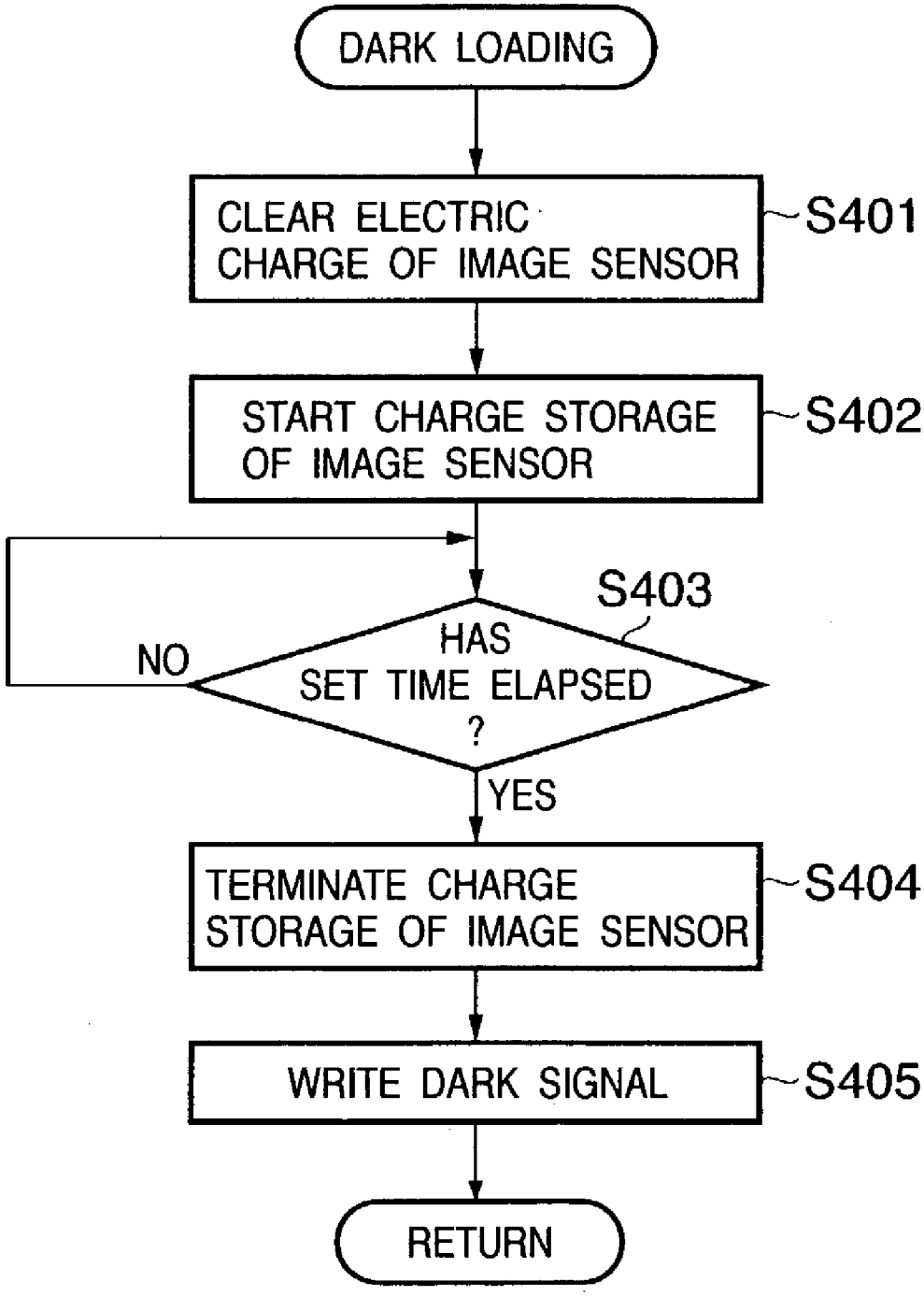
DARK LOADING
CLEAR ELECTRIC CHARGE OF IMAGE SENSOR
S401
START CHARGE STORAGE OF IMAGE SENSOR
S402
S403
HAS SET TIME ELAPSED ?
NO
YES
TERMINATE CHARGE STORAGE OF IMAGE SENSOR
S404
WRITE DARK SIGNAL
S405
RETURN

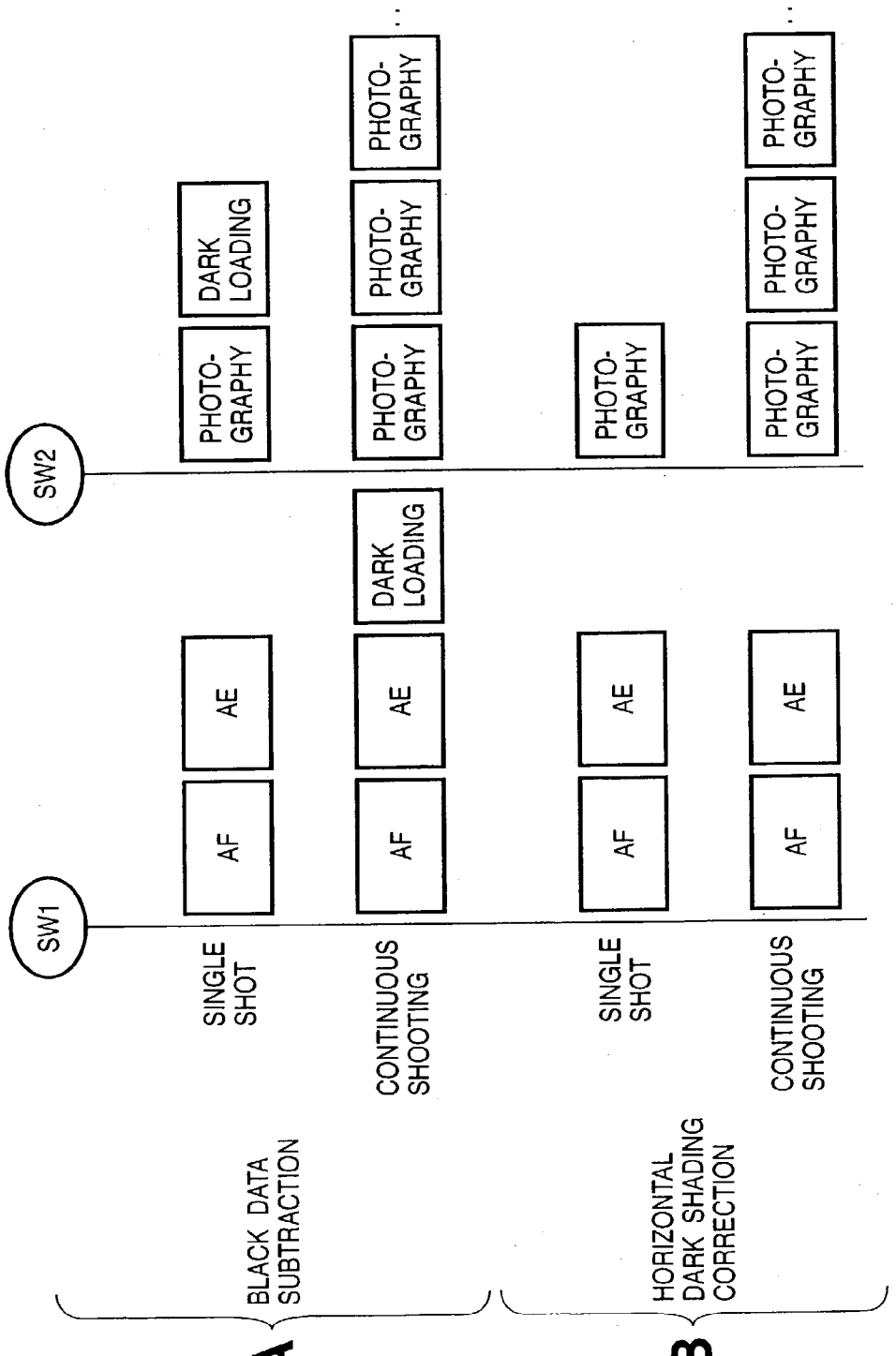

FIG. 11A

FIG. 11B

FIG. 12

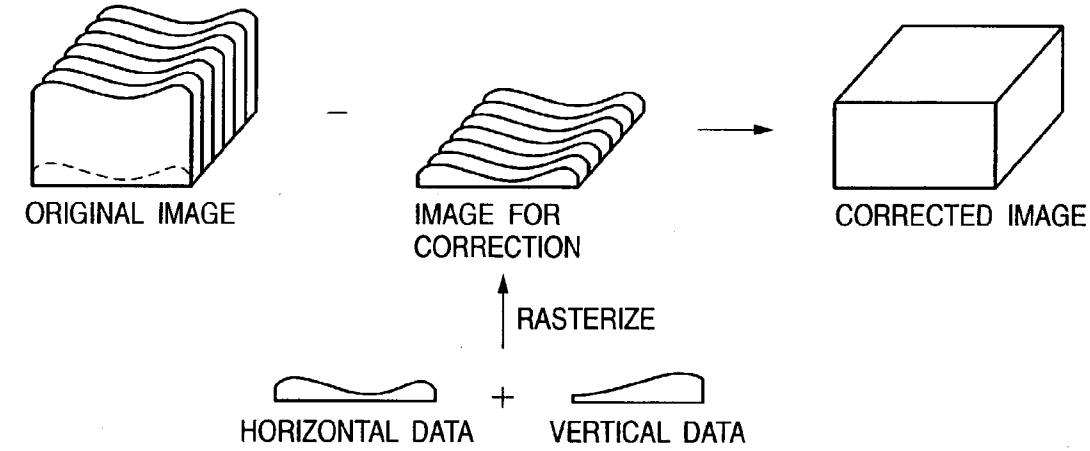
ORIGINAL IMAGE
−
IMAGE FOR CORRECTION
CORRECTED IMAGE
RASTERIZE
HORIZONTAL DATA
+
VERTICAL DATA

IMAGE SENSING APPARATUS, IMAGE SENSING METHOD, PROGRAM, AND STORAGE MEDIUM

FIELD OF THE INVENTION

[0001] The present invention relates to an image sensing apparatus, image sensing method, program, and storage medium for sensing, recording, and playing back still images, motion images, and the like.

BACKGROUND OF THE INVENTION

[0002] As an image sensing apparatus of this type, an image sensing apparatus such as a digital camera which uses a memory card having a solid-state memory device as a recording medium and records and plays back still images and motion images sensed by a solid-state image sensor such as a CCD or CMOS has been conventionally put on the market.

[0003] By selecting a photography mode of this digital camera, it is possible to switch single shot photography by which photography is performed frame by frame whenever a shutter button is pressed, and continuous photography by which photography is continuously performed while the shutter button is kept pressed.

[0004] Also, when image sensing is performed by using a solid-state image sensor such as a CCD or CMOS, dark noise correction can be performed by an arithmetic operation by using dark image data which is read out after electric charge is stored in the same manner as in regular photography while the image sensor is not exposed, and regular photography image data which is read out after electric charge is stored while the image sensor is exposed.

[0005] By this dark noise correction, a high-quality image can be obtained by correcting image quality deterioration, such as dark current noise produced in the image sensor or pixel loss caused by a very small flaw unique to the image sensor, of photographed image data.

[0006] Since dark current noise increases in accordance with the charge storage time and the temperature rise of the image sensor, a large image quality improving effect can be obtained especially when exposure is performed for a long time or at a high temperature. Therefore, this dark noise correction is a useful function for the user of a digital camera.

[0007] When regular photography is performed after dark image data is photographed by the conventional image sensing apparatus such as a digital camera described above, photographing frame intervals can be made equal during continuous photography. However, during single shot photography, a shutter release time lag increases by the dark image photographing time, so the user may miss a precious shutter chance.

[0008] On the other hand, when dark image data is photographed after regular photography is performed, a shutter release time lag can be decreased during single shot photography. However, during continuous photography, the photographing interval between the first and second frames increases, so the photographing frame intervals cannot be made equal.

[0009] In addition, photographing conditions and environmental conditions for long-time exposure or high-temperature exposure are not taken into consideration at all. That is, circuit system noise exists in addition to image quality deterioration such as dark current noise produced in the image sensor or pixel loss caused by a very small flaw unique to the image sensor. This circuit system noise is not taken into consideration at all. The circuit system noise is fixed-pattern noise which is dark offset produced by, e.g., voltage fluctuations caused by the resistance component of a power line in the sensor or sensor variations.

SUMMARY OF THE INVENTION

[0010] As an image sensing apparatus capable of preventing image quality deterioration while minimizing the number of times of dark image photography which causes a shutter release time lag, the present invention is an image sensing apparatus for recording a photographed image on a recording medium comprising image sensing means capable of image sensing in a first image sensing mode in which first image data is obtained by performing image sensing in a non-exposed state, and a second image sensing mode in which second image data is obtained by performing image sensing in an exposed state, correction data storage means for storing correction data for correcting the second image data obtained in the second image sensing mode which is obtained by an arithmetic operation on the basis of the first image data, selecting means for selecting one of the first image data obtained in the first image sensing mode and the stored correction data, and correcting means for correcting the second image data obtained in the second image sensing mode by using the selected first image data or correction data.

[0011] An image sensing method of the present invention is an image sensing method of recording a photographed image on a recording medium comprising a first image sensing step of obtaining first image data by performing image sensing in a non-exposed state, a second image sensing step of obtaining second image data by performing image sensing in an exposed state, a correction data storage step of storing correction data for correcting the second image data which is obtained by an arithmetic operation on the basis of the first image data, a selection step of selecting one of the obtained first image data and the stored correction data, and a correction step of correcting the obtained second image data by using the selected first image data or correction data.

[0012] Other features and advantages of the present invention will be apparent from the following description taken in conjunction with the accompanying drawings, in which like reference characters designate the same or similar parts throughout the figures thereof.

BRIEF DESCRIPTION OF THE DRAWINGS

[0013] The accompanying drawings, which are incorporated in and constitute a part of the specification, illustrate embodiments of the invention and, together with the description, serve to explain the principles of the invention.

[0014] **FIG. 1** is a block diagram showing the arrangement of a digital camera according to an embodiment;

[0015] **FIG. 2** is a view showing mixing of fixed-pattern noise in the horizontal and vertical directions;

[0016] **FIG. 3** is a flow chart showing the photographing operation procedure of an image processor **100**;

[0017] **FIG. 4** is a flow chart continued from **FIG. 3** to show the photographing operation procedure of the image processor **100**;

[0018] **FIG. 5** is a flow chart continued from **FIGS. 3 and 4** to show the photographing operation procedure of the image processor **100**;

[0019] **FIG. 6** is a view showing original image correction performed by black data subtraction or horizontal dark shading correction;

[0020] **FIG. 7** is a flow chart showing a focusing/photometry procedure in step **S114**;

[0021] **FIG. 8** is a flow chart showing a photographing procedure in step **S128**;

[0022] **FIG. 9** is a flow chart continued to **FIG. 8** to show the photographing procedure in step **S128**;

[0023] **FIG. 10** is a flow chart showing a dark loading procedure in steps **S121** and **S131**;

[0024] **FIGS. 11A and 11B** are views showing the flow of the photographing operation of this embodiment; and

[0025] **FIG. 12** is a view showing original image correction using one-dimensional data in both the vertical and horizontal directions.

DETAILED DESCRIPTION OF THE PREFERRED EMBODIMENT

[0026] Preferred embodiments of the present invention will now be described in detail in accordance with the accompanying drawings.

[0027] An image sensing apparatus, image sensing method, program, and storage medium according to an embodiment of the present invention will be explained with reference to the accompanying drawings. The image sensing apparatus of this embodiment is applied to a digital camera.

[0028] **FIG. 1** is a block diagram showing the arrangement of the digital camera according to the embodiment. In **FIG. 1**, reference numeral **100** denotes an image processor; **12**, a shutter having a stop function of controlling the exposure amount of an image sensor **14**; and **14**, the image sensor which converts an optical image into an electrical signal.

[0029] Light entering a photographing lens **310** in a lens unit **300** forms an optical image on the image sensor **14** through a stop **312**, lens mounts **306** and **106**, a mirror **130**, and the shutter **12** by the single-lens reflex system.

[0030] An A/D converter **16** converts an output analog signal from the image sensor **14** into a digital signal. A timing generator **18** supplies clock signals and control signals to the image sensor **14**, the A/D converter **16**, and a D/A converter **26**. The timing generator **18** is controlled by a memory control circuit **22** and system control circuit **50**.

[0031] An image processing circuit **20** performs predetermined pixel interpolation or color conversion for data from the A/D converter **16** or data from the memory control circuit **22**. The image processing circuit **20** performs a predetermined arithmetic operation by using sensed image data as needed. On the basis of the obtained operation result, the system control circuit **50** performs a TTL (Through-The-Lens) AF (Auto-Focusing) process, AE (Automatic Exposure) process, and EF (Electronic Flash light control) process to control an exposure (shutter) controller **40** and focusing controller **342**. Also, the image processing circuit **20** performs a predetermined arithmetic operation by using sensed image data and, on the basis of the obtained operation result, performs TTL AWB (Automatic White Balance) processing.

[0032] This embodiment includes the focusing controller **342** and a photometry controller **46** as dedicated units. Therefore, the system control circuit **50** can perform the AF (Auto-Focusing) process, AE (Automatic Exposure) process, and EF (Electronic Flash light control) process by using the focusing controller **42** and photometry controller **46**, but need not perform the AF (Auto-Focusing) process, AE (Automatic Exposure) process, and EF (Electronic Flash light control) process by using the image processing circuit **20**.

[0033] Alternatively, the system control circuit **50** can perform the AF (Auto-Focusing) process, AE (Automatic Exposure) process, and EF (Electronic Flash light control) process by using the focusing controller **42** and photometry controller **46**, and can also perform the AF (Auto-Focusing) process, AE (Automatic Exposure) process, and EF (Electronic Flash light control) process by using the image processing circuit **20**.

[0034] The memory control circuit **22** controls the A/D converter **16**, the timing generator **18**, the image processing circuit **20**, an image display memory **24**, the D/A converter **26**, a memory **30**, and a compression/expansion circuit **32**.

[0035] Data from the A/D converter **16** is written in the image display memory **24** or memory **30** via the image processing circuit **20** and memory control circuit **22** or via the memory control circuit **22** alone.

[0036] Reference numeral **24** denotes the image display memory; **26**, the D/A converter; and **28**, an image display which is a TFT LCD. Display image data written in the image display memory **24** is displayed on the image display **28** via the D/A converter **26**. When sensed image data is sequentially displayed on the image display **28**, a digital finder function can be realized. It is also possible to freely turn on and off the image display **28** in accordance with instructions from the system control circuit **50**. When the image display **28** is turned off, the power consumption of the image processor **100** can be greatly reduced.

[0037] The memory **30** stores photographed still images or motion images, and has an enough memory capacity to store a predetermined number of still images or a predetermined time of motion images. Accordingly, even in continuous photography or panorama photography during which a plurality of still images are continuously photographed, a large amount of images can be written in the memory **30** at a high speed. The memory **30** can also be used as a work area of the system control circuit **50**.

[0038] The compression/expansion circuit **32** compresses and expands image data by adaptive discrete cosine transform (ADCT) or the like. That is, the compression/expansion circuit **32** loads an image stored in the memory **30**, compresses or expands the loaded image, and writes the processed data in the memory **30**.

[0039] The shutter controller **40** controls the shutter **12** in collaboration with a stop controller **340** which controls the stop **312** on the basis of photometry information from the photometry controller **46**. The focusing controller **42** performs the AF (Auto-Focusing) process. That is, the focusing controller **42** allows light entering the photographing lens **310** in the lens unit **300** to propagate through the stop **312**, the lens mounts **306** and **106**, the mirror **130**, and a focusing submirror (not shown) by a single-lens reflex system, thereby measuring the focusing state of an image formed as an optical image.

[0040] A thermometer **44** detects the ambient temperature of a photographing environment. When this thermometer is installed in the image sensor **14**, the dark current of the sensor can be predicted more accurately.

[0041] The photometry controller **46** performs the AE (Automatic Exposure) process. That is, the photometry controller **46** allows light entering the photographing lens **310** in the lens unit **300** to propagate through the stop **312**, lens mounts **306** and **106**, mirror **130**, and focusing submirror (not shown) by the single-lens reflex system, thereby measuring the exposure state of an image formed as an optical image. The photometry controller **46** also achieves an EF (Electronic Flash light control) function in collaboration with an electronic flash **48**. The electronic flash **48** has an AF auxiliary light emitting function and electronic flash light control function.

[0042] As described earlier, on the basis of the result of an arithmetic operation performed by the image processing circuit **20** by using image data sensed by the image sensor **14**, the system control circuit **50** can perform exposure control and AF (Auto-Focusing) control using the video TTL system for the exposure (shutter) controller **40**, the stop controller **340**, and a focusing controller **342**.

[0043] AF (Auto-Focusing) control may also be performed by using the measurement result obtained by the focusing controller **42** and the operation result obtained by the image processing circuit **20** by using image data sensed by the image sensor **14**. Furthermore, exposure control may also be performed by using the measurement result obtained by the photometry controller **46** and the operation result obtained by the image processing circuit **20** by using image data sensed by the image sensor **14**.

[0044] The system control circuit **50** controls the whole image processor **100** and incorporates a well-known CPU and the like. A memory **52** stores constants, variables, programs, and the like for operations of the system control circuit **50**. A display unit **54** displays operating states, messages, and the like by using, e.g., characters, images, and sounds in accordance with execution of programs by the system control circuit **50**. The display unit **54** has a liquid crystal display device, loudspeaker, and the like. The display unit **54** is installed in one or a plurality of places near an operation unit of the image processor **100**, where the display unit **54** is easy to see. The display unit **54** is formed by combining an LCD, LEDs, sound generator, and the like. Some functions of the display unit **54** are installed in an optical finder **104**.

[0045] Of the display contents of the display unit **54**, those displayed on the LCD are, e.g., single shot/continuous photography indication, self-timer indication, the compression ratio, the number of recording pixels, the number of recorded frames, the number of remaining photographable frames, the shutter speed, the aperture value, exposure compensation indication, electronic flash indication, red-eye relief indication, macro photography indication, buzzer setting indication, the remaining amount of clock battery, the remaining amount of battery, error indication, information indication by a number of a plurality of digits, the state of attachment/detachment of recording media **200** and **210**, the state of attachment/detachment of the lens unit **300**, communication I/F operation indication, the date and time, and the state of connection to an external computer.

[0046] Of the display contents of the display unit **54**, those displayed in the optical finder **104** are, e.g., in-focus indication, the completion of photography preparation, a camera shake warning, flash charge indication, the completion of flash charge, the shutter speed, the aperture value, exposure compensation indication, and recording medium write operation indication.

[0047] Of the display contents of the display unit **54**, those indicated by the LED and the like are, e.g., in-focus indication, the completion of photography preparation, a camera shake warning, flash charge indication, the completion of flash charge, recording medium write operation indication, macro photography setting notification, and secondary battery charge indication.

[0048] Of the display contents of the display unit **54**, an example indicated by a lamp or the like is a self-timer notification lamp. This self-timer notification lamp may also be the AF auxiliary light.

[0049] Reference numeral **56** denotes an electrically erasable/recordable nonvolatile memory storing programs (to be described later). An EEPROM is used as this nonvolatile memory. The nonvolatile memory **56** stores set values such as various parameters and the ISO speed, set modes, and one-dimensional correction data used for horizontal dark shading correction. This one-dimensional correction data is formed and written during adjustment in the production process. For example, the one-dimensional data can be data of one horizontal line formed by performing a projective arithmetic operation for an image obtained by dark photography.

[0050] The correction data may also be two-dimensional data obtained by directly storing a dark image sensed in the production process. However, vertical fixed-pattern noise is small in some image sensors, so only horizontal correction need only be performed in these sensors.

[0051] Fixed-pattern noise is often produced by a difference (variation) between read paths through which signals from pixels reach the final output stage when these signals are read out from a circuit system of the image sensor. **FIG. 2** is a view showing mixing of fixed-pattern noise in the horizontal and vertical directions. Referring to **FIG. 2**, the horizontal fixed-pattern noise depends upon the difference between the read path of a vertical line a and the read path of a vertical line b. Likewise, the vertical fixed-pattern noise depends upon the difference between the read path of a horizontal line c and the read path of a horizontal line d. For example, as shown in **FIG. 2**, when an image sensor is so formed that horizontal lines share a read circuit and that noise mixed when a signal from each horizontal line is

transferred to the common read circuit is reduced by, e.g., improving the circuit layout, the vertical fixed-pattern noise is small and hence need not be corrected. In an image sensing apparatus using this image sensor, fixed-pattern noise can be removed by correcting an original image by using horizontal one-dimensional correction data.

[**0052**] Reference numerals **60**, **62**, **64**, **66**, **68**, and **70** denote operation units for designating various operations of the system control circuit **50**. Each operation unit is, e.g., a switch, a dial, a touch panel, a pointing device using a visual axis, a voice recognition device, or a combination of a plurality of these devices. Details of these operation units will be described below.

[**0053**] A mode dial switch **60** can selectively set various functional photography modes such as an automatic photograph mode, program photography mode, shutter speed priority photography mode, aperture priority photography mode, manual photography mode, focal depth priority (depth) photography mode, portrait photography mode, landscape photography mode, close-up photography mode, sports photography mode, night view photography mode, and panorama photography mode.

[**0054**] A shutter switch (SW1) **62** is turned on in the middle of the operation of a shutter button (not shown) to start the operation of AF (Auto-Focusing), AE (Automatic Exposure), AWB (Automatic White Balance), EF (Electronic Flash light control), or the like.

[**0055**] A shutter switch (SW2) **64** is turned on when the operation of the shutter button (not shown) is complete. The shutter switch (SW2) **64** starts the operation of a series of processes, i.e., an exposure process in which a signal read out from the image sensor **14** is written as image data in the memory **30** via the A/D converter **16** and memory control circuit **22**, a development process which uses arithmetic operations in the image processing circuit **20** and memory control circuit **22**, and a recording process in which image data is read out from the memory **30**, compressed by the compression/expansion circuit **32**, and written in the recording medium **200** or **210**.

[**0056**] A playback switch **66** starts a playback operation by which an image photographed in a photography mode is read out from the memory **30** or the recording medium **200** or **210** and displayed on the image display **28**.

[**0057**] A single/continuous switch **68** can set a single shot mode in which a standby state is set after one frame is photographed when the shutter switch SW2 is pressed, and a continuous shooting mode in which photography is continuously performed while the shutter switch SW2 is kept pressed.

[**0058**] An ISO speed set switch **69** can set the ISO speed by changing the gain setting in the image sensor **14** or image processing circuit **20**.

[**0059**] An operation unit **70** includes various buttons and a touch panel. Examples are a menu button, a set button, a macro button, a multiscreen playback page turning button, a flash set button, a single/continuous/self-timer switching button, a menu move +(plus) button, a menu move –(minus) button, a playback image move +(plus) button, a playback image move –(minus) button, a photographing image quality select button, an exposure compensation button, a date/time set button, a select/switch button for selecting and switching various functions when, e.g., panorama mode photography and playback are executed, a determine/execute button for determining and executing various functions when, e.g., panorama mode photography and playback are executed, an image display ON/OFF switch for setting ON/OFF of the image display **28**, a quick review ON/OFF switch for setting a quick review function for automatically playing back photographed image data immediately after the photography, a compression mode switch for selecting the compression ratio of JPEG compression or for selecting a CCDRAW mode in which a signal from the image sensor is directly converted into a digital signal and recorded on the recording medium, a playback switch capable of setting various modes such as a playback mode, multiscreen playback/erase mode, and PC connection mode, and an AF mode set switch capable of setting a one-shot AF mode in which an auto-focusing operation is started when the shutter switch **S1** is pressed and, once an in-focus state is obtained, this in-focus state is held, and a servo AF mode in which the auto-focusing operation is continued while the shutter switch SW1 is kept pressed.

[**0060**] The functions and numerical values of the plus buttons and minus buttons described above can be selected more smoothly by using rotary dial switches.

[**0061**] A power switch **72** can switch power ON and power OFF modes of the image processor **100**. The power switch **72** can also switch power ON and power OFF settings of various devices such as the lens unit **300**, an external strobe, and the recording media **200** and **210** connected to the image processor **100**.

[**0062**] Reference numeral **80** denotes a power controller which includes a battery detection circuit, a DC-DC converter, a switching circuit for switching blocks to be powered on, and the like. The power controller **80** detects the presence/absence of a battery, the type of battery, and the battery remaining amount. On the basis of the detection results and instructions from the system control circuit **50**, the power controller **80** controls the DC-DC converter to supply a necessary voltage to individual units including the recording media for a necessary period.

[**0063**] Reference numerals **82** and **84** denote connectors; and **86**, a power supply which is a primary battery such as an alkaline battery or lithium battery, a secondary battery such as a NiCd battery, NiMH battery, or Li battery, or an AC adapter.

[**0064**] Reference numerals **90** and **94** denote interfaces with recording media such as memory cards or hard disks; **92** and **96**, connectors for connecting to the recording media such as memory cards or hard disks; and **98**, a recording medium attachment sensor for sensing whether the recording media **200** and **210** are attached to the connectors **92** and **96**, respectively.

[**0065**] This embodiment includes two systems of interfaces and connectors for attaching recording media. However, it is also possible to install one or any arbitrary number of systems of interfaces and connectors for attaching recording media. In addition, as an interface and connector of another standard, those based on the standard of, e.g., a PCMCIA card or CF (Compact Flash (registered trademark)) card may also be used.

[0066] Furthermore, when the interfaces **90** and **94** and connectors **92** and **96** are based on the standard of, e.g., a PCMCIA card or CF (Compact Flash (registered trademark)) card, various communication cards such as a LAN card, modem card, USB card, IEEE1394 card, P1284 card, SCSI card, and PHS can be connected. Consequently, image data and management information attached to the image data can be transferred to another computer or a peripheral device such as a printer.

[0067] The optical finder **104** can guide light entering the photographing lens **310** through the stop **312**, the lens mounts **306** and **106**, the mirror **130**, and a mirror **132** by the single-lens reflex system, and form an optical image of the light. Accordingly, photography can be performed using only the optical finder **104** without using the digital finder function of the image display **28**. The optical finder **104** displays some functions of the display unit **54**. Examples are in-focus indication, a camera shake warning, flash charge indication, the shutter speed, the aperture value, and exposure compensation indication.

[0068] A communication unit **110** has various communication functions such as RS232C, USB, IEEEE1394, P1284, SCSI, a modem, a LAN, and radio communication. Reference numeral **112** denotes a connector for connecting the image processor **100** to another apparatus via the communication unit **110**, or an antenna for performing radio communication.

[0069] An interface **120** connects the image processor **100** to the lens unit **300** in the lens mount **106**. A connector **122** electrically connects the image processor **100** to the lens unit **300**. A lens attachment sensor **124** senses whether the lens unit **300** is attached to the lens mount **106** and/or the connector **122**.

[0070] The connector **122** exchanges control signals, state signals, data signals, and the like between the image processor **100** and lens unit **300**, and supplies electric currents having various voltages. The connector **122** may also perform optical communication and audio communication in addition to electrical communication.

[0071] The mirrors **130** and **132** guide light entering the photographing lens **310** to the optical finder **104** by the single-lens reflex system. The mirror **132** can be either a quick return mirror or half mirror.

[0072] The recording medium **200** is, e.g., a memory card or hard disk. The recording medium **200** has a recording unit **202** such as a semiconductor memory or magnetic disk, an interface **204** which interfaces with the image processor **100**, and a connector **206** which connects to the image processor **100**. Similar to the recording medium **200**, the recording medium **210** is also a memory card, hard disk, or the like. The recording medium **210** has a recording unit **212** such as a semiconductor memory or magnetic disk, an interface **214** which interfaces with the image processor **100**, and a connector **216** which connects to the image processor **100**.

[0073] The lens unit **300** is an interchangeable lens unit. The lens mount **306** mechanically couples the lens unit **300** with the image processor **100**. The lens mount **306** includes various functions of electrically connecting the lens unit **300** to the image processor **100**.

[0074] Reference numeral **310** denotes the photographing lens; **312**, the stop; **320**, an interface for connecting the lens unit **300** to the image processor **100** in the lens mount **306**; and **322**, a connector for electrically connecting the lens unit **300** to the image processor **100**.

[0075] The connector **322** exchanges control signals, state signals, data signals, and the like between the image processor **100** and lens unit **300**, and also has a function of receiving and supplying various electric currents. The connector **322** may also transmit an optical signal, audio signal, and the like in addition to an electrical signal.

[0076] The stop controller **340** controls the stop **312** in collaboration with the shutter controller **40** which controls the shutter **12**, on the basis of photometry information from the photometry controller **46**. The focusing controller **342** controls focusing of the photographing lens **310**. A zoom controller **344** controls zooming of the photographing lens **310**. A lens system control circuit **350** controls the whole lens unit **300**. The lens system control circuit **350** also has the function of a memory for storing constants, variables, programs, and the like for operations, and the function of a nonvolatile memory for holding identification information such as a number unique to the lens unit **300**, management information, function information such as the open aperture value, minimum aperture value, and focal length, and present and past set values.

[0077] The operation of the digital camera having the above arrangement will be described below. **FIGS. 3, 4**, and **5** are flow charts showing the photographing operation procedure of the image processor **100**. This processing program is stored in a storage medium such as the nonvolatile memory **30**, loaded into the memory **52**, and executed by the CPU of the system control circuit **50**.

[0078] When the power supply is turned on such as when the battery is replaced, the system control circuit **50** initializes flags, control variables, and the like, and performs necessary predetermined settings for the individual units of the image processor **100** (step S**101**). The system controller **50** checks the set position of the power switch **72** to determine whether the power switch **72** is set to power OFF (step S**102**).

[0079] If the power switch **72** is set to power OFF, the system control circuit **50** performs predetermined termination processes, e.g., terminates the display of each display unit, records necessary parameters including flags and control variables, set values, and set modes in the nonvolatile memory **56**, and causes the power controller **80** to shut down unnecessary power supply to the units including the image display **28** of the image processor **100** (step S**103**). After that, the flow returns to step S**102**.

[0080] If the power switch **72** is set to power ON, the system control circuit **50** causes the power controller **80** to check whether the remaining amount of the power supply **86** such as a battery and the operation status of the power supply **86** are suitable for the operation of the image processor **100** (step S**104**). If there is a problem, the system control circuit **50** gives a predetermined warning by displaying an image on the display unit **54** or outputting a sound (step S**105**), and the flow returns to step S**102**.

[0081] If the power supply **86** has no problem, the system control circuit **50** checks the set position of the mode dial switch **60** to determine whether the mode dial switch **60** is set to a photography mode (step S**106**). If the mode dial

switch **60** is set to another mode, the system control circuit **50** executes processing corresponding to the selected mode (step S**107**), and the flow returns to step S**102** after the execution.

[**0082**] If the mode dial switch **60** is set to the photography mode, the system control circuit **50** checks whether the recording medium **200** or **210** is attached, acquires management information of image data recorded in the recording medium **200** or **210**, and checks whether the operating state of the recording medium **200** or **210** is suitable for the operation of the image processor **100**, particularly, for recording and playback of image data with respect to the recording medium (step S**108**). If there is a problem, the system control circuit **50** gives a predetermined warning by displaying an image on the display unit **54** or outputting a sound (step S**105**), and the flow returns to step S**102**.

[**0083**] If there is no problem in step S**108**, the system control circuit **50** checks the selected state of the single/continuous switch **68** for selecting single shot photography/continuous photography (step S**109**). If single shot photography is selected, the system control circuit **50** sets the single/continuous flag to "single shot" (step S**110**). If continuous photography is selected, the system control circuit **50** sets the single/continuous flag to "continuous shooting" (step S**111**). The single/continuous switch **68** can freely switch a single shot mode in which a standby state begins after one frame is photographed when the shutter switch SW**2** is pressed, and a continuous shooting mode in which photography is continuously performed while the shutter switch SW**2** is kept pressed. Note that the state of the single/continuous flag is stored in an internal memory of the system control circuit **50** or in the memory **52**.

[**0084**] The system control circuit **50** uses the display unit **54** to display various set states of the image processor **100** by images and sounds (step S**112**). If the image display switch of the image display **28** is ON, various set states of the image processor **100** may also be displayed by images and sounds by using the image display **28**.

[**0085**] The system control circuit **50** checks whether the shutter switch SW**1** is pressed (step S**113**). If the shutter switch SW**1** is not pressed, the flow returns to step S**102**. If the shutter switch SW**1** is pressed, the system control circuit **50** performs a focusing/photometry process, i.e., focuses the photographing lens **310** on an object and determines an aperture value and shutter speed (step S**114**). In the photometry process, the electronic flash is set if necessary. Details of this focusing/photometry process will be explained later.

[**0086**] After that, the system control circuit **50** checks the set speed of the camera. That is, the system control circuit **50** checks whether the set speed of the ISO speed set switch **69** is less than ISO800 (step S**115**). This check is performed because if the set speed is ISO800 or more, an exposure amount becomes small, so the image quality is significantly deteriorated by, e.g., dark current noise produced in the image sensor or by pixel loss caused by a very small flaw unique to the image sensor. Although the threshold value is ISO800 in this embodiment, it is of course also possible to set ISO1600. If the set speed is ISO800 or more, the flow advances to step S**119**. If the set speed is less than ISO800, the system control circuit **50** further checks whether the set speed is less than ISO400 (step S**116**).

[**0087**] If the set speed is less than ISO400, the flow advances to step S**122**. If the set speed is ISO400 or more, the system control circuit **50** checks whether an ambient temperature Temp measured by the thermometer **44** is less than 28° C. (step S**117**). If the ambient temperature Temp is less than 28° C., the flow advances to step S**122**. If the ambient temperature Temp is 28° C. or more, the system control circuit **50** checks whether a shutter speed Tv is less than 1 sec (step S**118**). If the shutter speed Tv is less than 1 sec, the flow advances to step S**122**. If the shutter speed Tv is 1 sec or more, the flow advances to step S**119**.

[**0088**] In the condition determination processes in steps S**116**, S**117**, and S**118**, ISO400, 28° C., and 1 sec are respectively set as threshold values. However, depending on the characteristics of the image sensor **14**, some appropriate values may also be set.

[**0089**] Dark current noise increases with the charge storage time or with the temperature rise of the image sensor. Therefore, when long-time exposure or high-temperature exposure is to be performed, correction cannot be well performed by prestored correction data, so correction must be performed by black data subtraction.

[**0090**] Accordingly, if none of the conditions in steps S**116** to S**118** is met, the system control circuit **50** sets a black data subtraction flag to 1 (step S**119**). The system control circuit **50** then checks the set state of the single/continuous flag (step S**120**). If single shot is set, dark loading is performed after regular photography is completed, so the flow immediately advances to step S**124**. If continuous shooting is set, the system control circuit **50** performs dark loading for black data subtraction (step S**121**), and then the flow advances to step S**124**. By performing a correcting arithmetic operation by using dark image data loaded by this dark loading process, image quality deterioration, such as dark current noise produced in the image sensor **14** or pixel loss caused by a flaw unique to the image sensor **14**, of photographed image data can be corrected. This dark loading process will be described later.

[**0091**] If any of the conditions in steps S**116** to S**118** is met, the system control circuit **50** clears the black data subtraction flag to 0 (step S**122**) and rasterizes correction data (step S**123**), in order to perform horizontal dark shading correction without any black data subtraction. Note that the state of the black data subtraction flag is stored in the internal memory of the system control circuit **50** or in the memory **52**.

[**0092**] In step S**123**, the system control circuit **50** reads out one-dimensional correction data for use in horizontal dark shading correction from the nonvolatile memory **56**, and repetitively rasterizes this one-dimensional data in the vertical direction by the same number of lines as an actual image in a predetermined region of the memory **30**. After this correction data rasterization is completed, the flow advances to step S**124**. **FIG. 6** is a view showing original image correction performed by black data subtraction or the horizontal dark shading correction data.

[**0093**] The system control circuit **50** checks whether the shutter switch SW**2** is pressed (step S**124**). If the shutter switch SW**2** is not pressed, the system control circuit **50** checks whether the shutter switch SW**1** is released (step S**125**). The system control circuit **50** repeats the processes in

steps **S124** and **S125** until the shutter switch **SW1** is released or the shutter switch **SW2** is pressed. If the shutter switch **SW1** is released in step **S125**, the flow returns to step **S102**.

[**0094**] If the shutter switch **SW2** is pressed in step **S124**, the system control circuit **50** checks whether the memory **30** has an image storage buffer area capable of storing the photographed image data (step **S126**). If the image storage buffer area of the memory **30** has no area capable of storing new image data, the system control circuit **50** performs a predetermined warning by displaying an image on the display unit **54** or outputting a sound (step **S127**), and the flow returns to step **S102**.

[**0095**] For example, this happens immediately after the maximum number of frames storable in the image storage buffer area of the memory **30** are continuously photographed, the first image to be read out from the memory **30** and written in the recording medium **200** or **210** has not been recorded in the recording medium **200** or **210**, so an empty area for even one frame cannot be secured in the image storage buffer area of the memory **30**.

[**0096**] When photographed image data is to be stored in the image storage buffer area of the memory **30** after being compressed, the compressed image data amount depends upon the settings of the compression mode. By taking this into consideration, therefore, the system control circuit **50** checks in step **S126** whether there is a storage area in the image storage buffer area of the memory **30**.

[**0097**] If determining in step **S126** that the memory **30** has an image storage buffer area capable of storing the photographed image data, the system control circuit **50** executes a photographing process, i.e., reads out a sensed image signal stored for a predetermined time after image sensing from the image sensor **14**, and writes the photographed image data in a predetermined area of the memory **30** via the A/D converter **15**, image processing circuit **20**, and memory control circuit **22**, or from the A/D converter **16** via the memory control circuit **22** alone (step **S128**). Details of this photographing process will be described later.

[**0098**] When completing the photographing process in step **S128**, the system control circuit **50** checks the state of the black data subtraction flag stored in the internal memory or the memory **52** (step **S129**). If the black data subtraction flag is not set to 1, the flow advances to step **S132**. If the black data subtraction flag is set to 1, the system control circuit **50** checks the state of the single/continuous flag stored in the internal memory or the memory **52** (step **S130**). If continuous shooting is set, the flow advances to step **S132**.

[**0099**] As described above, when continuous shooting is set in step **S130**, a development process is executed (step **S132**) without performing a dark loading process in step **S131** because dark loading is already performed in step **S121** before execution of continuous photography. In this manner, continuous shooting frame intervals can be made substantially equal.

[**0100**] If single shot is set in step **S130**, the system control circuit **50** performs the dark loading process, i.e., stores noise components such as the dark current of the image sensor **14** for the same time as regular photography with the shutter **12** closed, and reads out the stored noise image signal (step **S131**). After that, the flow advances to step **S132**.

[**0101**] The system control circuit **50** reads out a portion of the image data written in the predetermined area of the memory **30**, performs a WB (White Balance) integral operation and OB (Optical Black) integral operation necessary to perform development, and stores the operation results in the internal memory of the system control circuit **50** or in the memory **52**.

[**0102**] The system control circuit **50** reads out the photographed image data written in the predetermined area of the memory **30** by using the memory control circuit **22** and, if necessary, the image processing circuit **20**, and performs various development processes including AWB (Automatic White Balance), gamma conversion, and color conversion by using the operation results stored in the internal memory of the system control circuit **50** or in the memory **52** (step **S132**).

[**0103**] In the development process, the system control circuit **50** also performs a dark correcting operation for canceling the dark current noise of the image sensor **14** and the like by performing subtraction by using the horizontal dark shading correction data rasterized in step **S123** or the dark image data loaded in the dark loading process.

[**0104**] When the correcting operation is performed by using the horizontal dark shading correction data as described above, image quality deterioration caused by horizontal dark current noise or fixed-pattern noise produced in the image sensor **14** can be corrected without performing any dark loading for the photographed image. When the correcting operation is performed by using the dark image data loaded in the dark loading process, it is possible to correct that image quality deterioration of the photographed image data, which results not only from horizontal dark current noise or fixed-pattern noise produced in the image sensor **14** but also from two-dimensional factors such as pixel loss caused by a flaw unique to the image sensor **14**.

[**0105**] The system control circuit **50** reads out the image data written in the predetermined area of the memory **30**, performs image compression corresponding to the set mode by using the compression/expansion circuit **32**, and writes the photographed image data subjected to the series of processes in an empty image area of the image storage buffer area of the memory **30** (step **S133**).

[**0106**] The system control circuit **50** then starts a recording process of reading out the image data stored in the image storage buffer area of the memory **30**, and writing the readout image data in the recording media **200** and **210** such as memory cards or compact flash (registered trade mark) cards via the interfaces **90** and **94** and connectors **92** and **96** (step **S134**). Whenever new photographed image data subjected to the series of processes is written in an empty image portion of the image storage buffer area of the memory **30**, this recording starting process is executed for the image data.

[**0107**] While the image data is written in the recording media **200** and **210**, the system control circuit **50** performs recording medium write operation indication on the display unit **54**, e.g., turns on and off the LED of the display unit **54**, in order to indicate that the write operation is being executed.

[**0108**] In addition, the system control circuit **50** checks whether the shutter switch **SW1** is pressed (step **S135**). If the

shutter switch SW1 is released, the flow returns to step S102. If the shutter switch SW1 is pressed, the system control circuit **50** checks the state of the single/continuous flag stored in the internal memory of the system control circuit **50** or in the memory **52** (step S136). If single shot is set, the flow returns to step S135, and the current processing is repeated until the shutter switch SW1 is released. If continuous shooting is set, the flow returns to step S124 to prepare for the next photography, in order to continuously perform photography. In this way, the series of processes concerning photography are complete.

[0109] **FIG. 7** is a flow chart showing the focusing/photometry procedure in step S114. In this focusing/photometry procedure, various signals are exchanged between the system control circuit **50** and the stop controller **340** or the focusing controller **342** via the interface **120**, connectors **122** and **322**, interface **320**, and lens system control circuit **350**.

[0110] The system control circuit **50** starts an AF (Auto-Focusing) process by using the image sensor **14** and focusing controllers **42** and **342** (step S201).

[0111] The system control circuit **50** feeds light entering the photographing lens **310** to the focusing controller **42** via the stop **312**, lens mounts **306** and **106**, mirror **130**, and focusing submirror (not shown), thereby checking the focusing state of an image formed as an optical image. Until focusing (AF) indicates an in-focus state, the system control circuit **50** detects the focusing state by using the focusing controller **42** while driving the photographing lens **310** by using the focusing controller **342**. In this way, the system control circuit **50** executes AF control (steps S202 and S203)

[0112] If focusing (AF) indicates an in-focus state in step S203, the system control circuit **50** determines the in-focus focusing point from a plurality of focusing points in the photographing image plane, and stores the determined focusing point data, focusing data and/or set parameters in the internal memory of the system control circuit **50** or in the memory **52** (step S204).

[0113] Subsequently, the system control circuit **50** starts an AE (Automatic Exposure) process by using the photometry controller **46** (step S205). The system control circuit **50** feeds light entering the photographing lens **310** to the focusing controller **42** via the stop **312**, lens mounts **306** and **106**, mirrors **130** and **132**, and photometry lens (not shown), thereby checking the exposure state of the image formed as an optical image, and performs photometry by using the exposure (shutter) controller **40** until exposure (AE) is found to be appropriate (steps S206 and S207).

[0114] If exposure (AE) is found to be appropriate in step S207, the system control circuit **50** stores the photometry data and/or set parameters in the internal memory of the system control circuit **50** or in the memory **52** (step S207A).

[0115] In accordance with the exposure (AE) result detected by the photometry process in step S206 and the photography mode set by the mode dial switch **60**, the system control circuit **50** determines an aperture value (Av value) and shutter speed (Tv value).

[0116] On the basis of the determined shutter speed (Tv value), the system controller **50** determines the charge storage time of the image sensor **14**, and performs photography and dark loading for this determined charge storage time.

[0117] On the basis of the photometry data obtained in the photometry process in step S206, the system control circuit **50** checks whether the electronic flash is necessary (step S208). If the electronic flash is necessary, the system control circuit **50** sets a flash flag and charges the electronic flash **48** until it is completely charged (steps S209 and S210). When the electronic flash **48** is completely charged, the system control circuit **50** terminates this processing and returns to the main processing.

[0118] **FIGS. 8 and 9** are flow charts showing the photographing procedure in step S128. In this photographing process, various signals are exchanged between the system control circuit **50** and the stop controller **340** or the focusing controller **342** via the interface **120**, connectors **122** and **322**, interface **320**, and lens system control circuit **350**.

[0119] The system control circuit **50** moves the mirror **130** to a mirror up position by a mirror driver (not shown) (step S301). In accordance with the photometry data stored in the internal memory of the system control circuit **50** or in the memory **52**, the system control circuit **50** drives the stop **312** to a predetermined aperture value by the stop controller **340** (step S302).

[0120] After clearing the electric charge of the image sensor **14** (step S303), the system control circuit **50** starts charge storage (step S304), opens the shutter **12** by the shutter controller **40** (step S305), and starts exposing the image sensor **14** (step S306).

[0121] The system control circuit **50** then checks in accordance with the flash flag whether the electronic flash **48** is necessary (step S307). If YES in step S307, the system control circuit **50** causes the electronic flash **48** to emit light (step S308).

[0122] The system control circuit **50** waits for the completion of exposure of the image sensor **14** in accordance with the photometry data (step S309). When the exposure is complete, the system control circuit **50** closes the shutter **12** by the shutter controller **40** (step S310), thereby terminating the exposure of the image sensor **14**.

[0123] The system control circuit **50** drives the stop **312** to the open aperture value by the stop controller **340** (step S311), and moves the mirror **130** to a mirror down position by the mirror driver (not shown) (step S312).

[0124] The system control circuit **50** then checks whether the set charge storage time has elapsed (step S313). If the set charge storage time has elapsed, the system control circuit **50** terminates charge storage of the image sensor **14** (step S314) . After that, the system control circuit **50** reads out an electric charge signal from the image sensor **14**, and writes the photographed image data in a predetermined area of the memory **30** via the A/D converter **16**, image processing circuit **20**, and memory control circuit **22**, or from the A/D converter **16** via the memory control circuit **22** alone (step S315). When completing the series of processes, the system control circuit **50** terminates this processing and returns to the main processing.

[0125] **FIG. 10** is a flow chart showing the dark loading process in steps S121 and S131. The system control circuit

50 clears the electric charge of the image sensor **14** (step S**401**), and starts storing electric charge in the image sensor **14** with the shutter **12** closed (step S**402**).

[**0126**] The system control circuit **50** then checks whether a preset charge storage time has elapsed (step S**403**). If this charge storage time has elapsed, the system control circuit **50** terminates the charge storage of the image sensor **14** (step S**404**), and writes image data (dark image data) in a predetermined area of the memory **30** via the A/D converter **16**, image processing circuit **20**, and memory control circuit **22**, or from the A/D converter **16** via the memory control circuit **22** alone (step S**405**). This dark image data is used in development performed when photography is executed beforehand and the photographed image data is read out from the image sensor **14** and written in the memory **30**.

[**0127**] When development is performed using this dark loading data, image quality deterioration, such as dark current noise produced in the image sensor **14** or pixel loss caused by a flaw unique to the image sensor **14**, of photographed image data can be corrected. After that, the system control circuit **50** terminates this processing and returns to the main processing.

[**0128**] **FIGS. 11A and 11B** are views showing the flow of photography in this embodiment. As shown in **FIG. 11**A, if the black data subtraction flag is set in single shot photography, AF (Auto-Focusing) and AE (Automatic Exposure) are performed when the shutter switch SW**1** is pressed, and dark loading is performed after photography when the shutter switch SW**2** is pressed after that. If the black data subtraction flag is set in continuous photography, dark loading is performed after AF (Auto-Focusing) and AE (Automatic Exposure) when the shutter switch SW**1** is pressed, and photography is continuously performed when the shutter switch SW**2** is pressed after that.

[**0129**] On the other hand, as shown in **FIG. 11**B, if the black data subtraction flag is not set and horizontal dark shading correction is to be performed, AF (Auto-Focusing) and AE (Automatic Exposure) are performed when the shutter switch SW**1** is pressed, and photography is performed when the shutter switch SW**2** is pressed after that, without performing any dark loading, in both single shot photography and continuous photography.

[**0130**] In the image sensing apparatus of this embodiment as described above, when correction is to be performed by selecting prestored horizontal dark shading correction data, no dark image data need be photographed. Therefore, a shutter release time lag can be reduced, and a user does not miss a shutter chance by a release time lag.

[**0131**] Noise which does not change by photographing conditions or environmental conditions, such as fixed-pattern noise equivalent to circuit system noise of an image sensor, can be corrected by prestored correction data. However, noise which changes its amount in accordance with photographing conditions or environmental conditions, i.e., image quality deterioration such as dark current noise produced in an image sensor or pixel loss caused by a very small flaw unique to the image sensor, cannot be completely corrected with prestored data alone in some cases. To correct such noise, if an amount to be corrected is predicted to be largely different from the prestored horizontal dark shading correction data owing to photographing conditions such as the ISO speed or shutter time or environmental conditions such as the ambient temperature, dark loading is performed, and the noise is corrected by using the obtained dark image data. In this manner, deterioration of the image quality can be prevented.

[**0132**] In addition, when an image sensor which requires no correction because its fixed-pattern noise in one of the horizontal and vertical directions is small is to be used, one-dimensional horizontal dark shading correction data, for example, can be used as the prestored correction data. This simplifies the processing and reduces the amount of memory for storing the correction data.

[**0133**] The embodiment of the present invention has been explained above. However, the present invention is not limited to the arrangement of this embodiment and is applicable to any arrangement capable of achieving the functions presented in the scope of claims or the functions of the arrangement of the embodiment.

[**0134**] For example, in the above embodiment, correction data is rasterized in the memory **30** when horizontal dark correction is to be performed. However, correction may also be performed without any rasterization such that correction data is sequentially subtracted from an original image while image data is loaded from the image sensor **14**.

[**0135**] Also, in this embodiment, rasterization (S**123**) of the horizontal dark shading correction data is performed after the shutter switch SW**1** is pressed. However, the correction data may also be rasterized when the power supply of the camera is turned on.

[**0136**] Furthermore, although the correction data is one-dimensional horizontal data in the embodiment, this correction data may also be one-dimensional vertical data or two-dimensional data. Also, the correction data need not be data of a whole two-dimensional image. That is, as shown in **FIG. 12**, one-dimensional data in both the horizontal and vertical directions are stored. When the one-dimensional horizontal data is to be rasterized in the correction data rasterization process (S**123**), dark shading in both the horizontal and vertical directions can be corrected by adjusting the correction amount line by line by using the one-dimensional vertical data. **FIG. 12** is a view showing original image correction using one-dimensional data in both the vertical and horizontal directions. In this case, the vertical data may also be stored not as one-dimensional correction data but as a mathematical expression. When the one-dimensional horizontal data is to be rasterized, vertical dark shading can be corrected by using this mathematical expression.

[**0137**] In the above embodiment, correction data is formed and stored in the nonvolatile memory **56** during adjustment in the production process. However, this correction data may also be formed and stored by a user at any arbitrary timing by performing a projective arithmetic operation for an image obtained by dark photography.

[**0138**] In the above embodiment, single shot and continuous shooting are switched by using the single/continuous switch **68**. However, single shot and continuous shooting may also be switched in accordance with operation mode selection by the mode dial **60**.

[**0139**] In the above embodiment, the charge storage time of dark loading is made equal to that of regular photography.

However, this charge storage time may also be different provided that data sufficient to correct dark current noise or the like can be obtained.

[0140] In the above embodiment, no photography can be performed while dark loading is executed in steps **S121** and **S131**. Therefore, an image or sound indicating that the image processor **100** is in a busy state may be generated by the display unit **54** and/or the image display **28**.

[0141] In this embodiment, photography is performed by moving the mirror **130** to the mirror up position or mirror down position. However, it is also possible to use a half mirror as the mirror **130** and perform photography without moving the mirror **130**.

[0142] Furthermore, each of the recording media **200** and **210** need not be a memory card such as a PCMCIA card or compact flash (registered trade mark) card or a hard disk, but may be a micro DAT, a magnetooptical disk, an optical disk such as a CD-R or CD-RW, or a phase changing optical disk such as a DVD. Each of the recording media **200** and **210** may also be a composite medium formed by integrating, e.g., a memory card and hard disk. In this case, a portion may also be detachable from the composite medium.

[0143] In the above embodiment, the recording media **200** and **210** are separated from the image processor **100** and can be freely connected. However, one or both of these recording media may also be fixed to the image processor **100**. It is also possible to connect one or any arbitrary number of recoding media **200** and **210** to the image processor **100**.

[0144] Further, the present invention is also applicable to a case in which the invention is achieved by supplying program codes of software for implementing the functions of the above embodiment to a system or apparatus. In this case, the program codes themselves implement the novel functions of the present invention, and the program itself and a storage medium storing the program constitute the invention.

[0145] In the above embodiment, program codes shown in the flow charts of FIGS. **3** to **5** and **7** to **10** are stored in the ROM as a storage medium. However, a storage medium for supplying the program codes is not limited to the ROM. For example, it is also possible to use a flexible disk, hard disk, or nonvolatile memory card.

[0146] In the present invention, no dark image data need be photographed when correction is to be performed by selecting prestored correction data. Accordingly, a shutter release time lag can be reduced, and a user does not miss a shutter change by a release time lag.

[0147] Also, if an amount to be corrected is predicted to be largely different from prestored correction data owing to photographing conditions such as the ISO speed or shutter time or environmental conditions such as the ambient temperature, correction is performed using dark image data obtained in the first image sensing mode. In this manner, deterioration of the image quality can be prevented.

[0148] Furthermore, since the prestored correction data is one-dimensional correction data, the processing is simplified, and the amount of memory for storing the correction data is reduced.

[0149] As described above, deterioration of the image quality can be prevented while the number of times of dark image photography which causes a shutter release time lag is minimized.

[0150] The present invention can be applied to a system constituted by a plurality of devices (e.g., host computer, sensor, interface, reader, printer,) or to an apparatus comprising a single device (e.g., digital camera).

[0151] Further, the object of the present invention can also be achieved by providing a storage medium storing program codes for performing the aforesaid processes to a computer system or apparatus (e.g., a personal computer), reading the program codes, by a CPU or MPU of the computer system or apparatus, from the storage medium, then executing the program.

[0152] In this case, the program codes read from the storage medium realize the functions according to the described embodiments and the storage medium storing the program codes constitutes the invention.

[0153] Further, the storage medium, such as a floppy disk, a hard disk, an optical disk, a magneto-optical disk, CD-ROM, CD-R, a magnetic tape, a non-volatile type memory card, and ROM can be used for providing the program codes.

[0154] Furthermore, besides aforesaid functions according to the above described embodiments are realized by executing the program codes which are read by a computer, the present invention includes a case where an OS (operating system) or the like working on the computer performs a part or entire processes in accordance with designations of the program codes and realizes functions according to the above described embodiments.

[0155] Furthermore, the present invention also includes a case where, after the program codes read from the storage medium are written in a function expansion card which is inserted into the computer or in a memory provided in a function expansion unit which is connected to the computer, CPU or the like contained in the function expansion card or unit performs a part or entire process in accordance with designations of the program codes and realizes functions of the above described embodiments.

[0156] In a case where the present invention is applied to the aforesaid storage medium, the storage medium stores program codes corresponding to the flowcharts described in the embodiments.

[0157] The present invention is not limited to the above embodiments and various changes and modifications can be made within the spirit and scope of the present invention. Therefore to apprise the public of the scope of the present invention, the following claims are made.

[0158] It is thus believed that the operation and construction of the present invention will be apparent from the foregoing description. While the method, apparatus and system shown and described has been characterized as being preferred, it will be readily apparent that various changes and modifications could be made therein without departing from the scope of the invention as defined in the following claims.

What is claimed is:

1. An image sensing apparatus for recording a photographed image on a recording medium comprising:

image sensing means capable of image sensing in a first image sensing mode in which first image data is

obtained by performing image sensing in a non-exposed state, and a second image sensing mode in which second image data is obtained by performing image sensing in an exposed state;

correction data storage means for storing correction data for correcting the second image data obtained in the second image sensing mode, which is obtained by an arithmetic operation on the basis of the first image data;

selecting means for selecting one of the first image data obtained in the first image sensing mode and the stored correction data; and

correcting means for correcting the second image data obtained in the second image sensing mode by using the selected first image data or correction data.

2. The apparatus according to claim 1 wherein the correction data is stored in said correction data storage means in a production process.

3. The apparatus according to claim 1, wherein,

said image sensing means is an image sensor,

the first image data obtained in the first image sensing mode is dark current noise data of said image sensor,

the second image data obtained in the second image sensing mode is photographed image data sensed by said image sensor, and

the correction data is fixed-pattern noise equivalent to circuit system noise of said image sensor.

4. The apparatus according to claim 1, wherein said selecting means performs selection on the basis of photographing conditions and environmental conditions.

5. The apparatus according to claim 4, wherein the photographing conditions include a shutter speed and ISO speed.

6. The apparatus according to claim 4, wherein the environmental conditions include an ambient temperature.

7. The apparatus according to claim 3, wherein the correction data is one-dimensional correction data obtained from the first image data.

8. The apparatus according to claim 7, wherein the one-dimensional correction data is horizontal data obtained by performing a projective arithmetic operation in a vertical direction for image data obtained in the first image sensing mode.

9. An image sensing method of recording a photographed image on a recording medium comprising:

a first image sensing step of obtaining first image data by performing image sensing in a non-exposed state;

a second image sensing step of obtaining second image data by performing image sensing in an exposed state;

a correction data storage step of storing correction data for correcting the second image data, which is obtained by an arithmetic operation on the basis of the first image data;

a selection step of selecting one of the obtained first image data and the stored correction data; and

a correction step of correcting the obtained second image data by using the selected first image data or correction data.

10. The method according to claim 9, wherein the correction data storage step is performed in a production process of an image sensing apparatus.

11. The method according to claim 9, wherein,

the first image data is dark current noise data of an image sensor,

the second image data is photographed image data sensed by the image sensor, and

the correction data is fixed-pattern noise equivalent to circuit system noise of the image sensor.

12. The method according to claim 9, wherein the selection step comprises performing selection on the basis of photographing conditions and environmental conditions.

13. The method according to claim 12, wherein the photographing conditions include a shutter speed and ISO speed.

14. The method according to claim 12, wherein the environmental conditions include an ambient temperature.

15. The method according to claim 11, wherein the correction data is the first image data obtained in the first image sensing mode or data obtained by an arithmetic operation on the basis of the first image data.

16. The method according to claim 15, wherein the correction data is one-dimensional correction data obtained from the first image data.

17. The method according to claim 16, wherein the one-dimensional correction data is horizontal data obtained by performing a projective arithmetic operation in a vertical direction for image data obtained in the first image sensing mode.

18. A storage medium holding a computer-readable program code for implementing the image sensing method cited in any one of claims **9**.

19. A program having a computer-readable program code for implementing the image sensing method cited in any one of claims **9**.

20. An image sensing apparatus for recording a photographed image on a recording medium comprising:

image sensing means capable of image sensing in a first image sensing mode in which first image data is obtained by performing image sensing in a non-exposed state, and a second image sensing mode in which second image data is obtained by performing image sensing in an exposed state;

correction data storage means for storing correction data for correcting the second image data obtained in the second image sensing mode;

selecting means for selecting one of the first image data obtained in the first image sensing mode and the stored correction data before the image sensing by said image sensing means; and

correcting means for correcting the second image data obtained in the second image sensing mode by using the selected first image data or correction data.

* * * * *