US011224742B2

(12) **United States Patent**
**Burnett**

(10) **Patent No.: US 11,224,742 B2**
(45) **Date of Patent: Jan. 18, 2022**

(54) **METHODS AND DEVICES FOR PERFORMING ELECTRICAL STIMULATION TO TREAT VARIOUS CONDITIONS**

(71) Applicant: **EMKinetics, Inc.**, San Francisco, CA (US)

(72) Inventor: **Daniel R. Burnett**, San Francisco, CA (US)

(73) Assignee: **EMKinetics, Inc.**, San Francisco, CA (US)

( * ) Notice: Subject to any disclaimer, the term of this patent is extended or adjusted under 35 U.S.C. 154(b) by 145 days.

(21) Appl. No.: **15/665,152**

(22) Filed: **Jul. 31, 2017**

(65) **Prior Publication Data**

US 2017/0354831 A1 Dec. 14, 2017

**Related U.S. Application Data**

(63) Continuation of application No. 15/056,910, filed on Feb. 29, 2016, now Pat. No. 9,757,584, which is a
(Continued)

(51) **Int. Cl.**
***A61N 1/05*** (2006.01)
***A61N 1/36*** (2006.01)
(Continued)

(52) **U.S. Cl.**
CPC ..... ***A61N 1/0502*** (2013.01); ***A61N 1/0492*** (2013.01); ***A61N 1/36007*** (2013.01);
(Continued)

(58) **Field of Classification Search**
CPC ..... A61N 1/36007; A61N 1/36031; A61N 1/0456
See application file for complete search history.

(56) **References Cited**

U.S. PATENT DOCUMENTS

2,003,392 A 6/1935 Rucker
2,893,392 A 7/1959 Wagner et al.
(Continued)

FOREIGN PATENT DOCUMENTS

EP 2493551 9/2012
GB 2298370 9/1996
(Continued)

OTHER PUBLICATIONS

Amarenco et al., "Urodynamic effect of acute transcutaneous posterior tibial nerve stimulation in overactive bladder," Jun. 2003, Journal of Urology, vol. 169, 2210-2215. (Year: 2003).*
(Continued)

*Primary Examiner* — Michael W Kahelin
(74) *Attorney, Agent, or Firm* — Levine Bagade Han LLP

(57) **ABSTRACT**

In certain variations, systems and/or methods for electromagnetic induction therapy are provided. One or more ergonomic or body contoured applicators may be included. The applicators include one or more conductive coils configured to generate an electromagnetic or magnetic field focused on a target nerve, muscle or other body tissues positioned in proximity to the coil. One or more sensors may be utilized to detect stimulation and to provide feedback about the efficacy of the applied electromagnetic induction therapy. A controller may be adjustable to vary a current through a coil to adjust the magnetic field focused upon the target nerve, muscle or other body tissues based on the feedback provide by a sensor or by a patient. In certain systems or methods, pulsed magnetic fields may be intermittently applied to a target nerve, muscle or tissue without causing habituation.

**13 Claims, 37 Drawing Sheets**

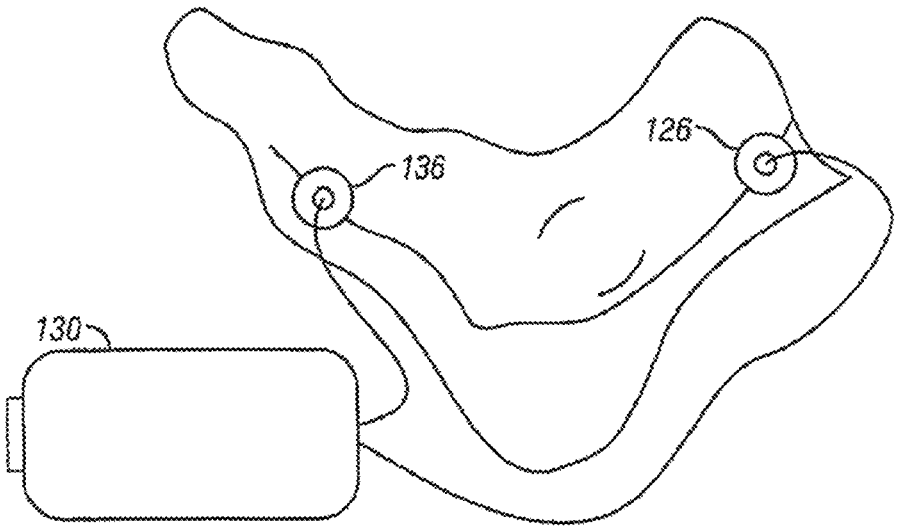

**Related U.S. Application Data**

continuation of application No. 14/676,635, filed on Apr. 1, 2015, now Pat. No. 9,387,338, which is a continuation of application No. 14/085,639, filed on Nov. 20, 2013, now Pat. No. 9,002,477, which is a continuation of application No. 13/456,016, filed on Apr. 25, 2012, now abandoned, which is a continuation of application No. PCT/US2010/054167, filed on Oct. 26, 2010, said application No. 14/085,639 is a continuation-in-part of application No. 12/508,529, filed on Jul. 23, 2009, now abandoned, which is a continuation-in-part of application No. 11/866,329, filed on Oct. 2, 2007, now abandoned.

(60) Provisional application No. 60/848,720, filed on Oct. 2, 2006, provisional application No. 61/279,883, filed on Oct. 26, 2009.

(51) **Int. Cl.**

| | |
|---|---|
| ***A61N 1/40*** | (2006.01) |
| ***A61N 2/00*** | (2006.01) |
| ***A61N 2/02*** | (2006.01) |
| ***A61N 1/04*** | (2006.01) |

(52) **U.S. Cl.**

CPC ..... ***A61N 1/36017*** (2013.01); ***A61N 1/36021*** (2013.01); ***A61N 1/36067*** (2013.01); ***A61N 1/36071*** (2013.01); ***A61N 1/36075*** (2013.01); ***A61N 1/36096*** (2013.01); ***A61N 1/36107*** (2013.01); ***A61N 1/36139*** (2013.01); ***A61N 1/40*** (2013.01); ***A61N 2/006*** (2013.01); ***A61N 2/008*** (2013.01); ***A61N 2/02*** (2013.01); *A61N 1/0456* (2013.01); *A61N 1/0484* (2013.01); *A61N 1/36003* (2013.01)

(56) **References Cited**

U.S. PATENT DOCUMENTS


| | | | |
|---|---|---|---|
| 3,034,507 | A | 5/1962 | McConnell et al. |
| 3,817,254 | A | 6/1974 | Maurer |
| 3,841,305 | A | 10/1974 | Hallgren |
| 4,233,965 | A | 11/1980 | Fairbanks |
| 4,266,533 | A | 5/1981 | Ryaby et al. |
| 4,428,366 | A | 1/1984 | Findl et al. |
| 4,456,012 | A | 6/1984 | Lattin |
| 4,548,208 | A | 10/1985 | Niemi |
| 4,574,809 | A | 3/1986 | Talish et al. |
| 4,784,737 | A | 11/1988 | Ray et al. |
| 4,804,054 | A | 2/1989 | Howson et al. |
| 4,837,049 | A | 6/1989 | Byers et al. |
| 4,915,110 | A | 4/1990 | Kitov |
| 4,926,878 | A | 5/1990 | Snedeker |
| 4,940,453 | A | 7/1990 | Cadwell |
| 4,969,468 | A | 11/1990 | Byers et al. |
| 4,994,015 | A | 2/1991 | Cadwell |
| 5,000,178 | A | 3/1991 | Griffith |
| 5,014,699 | A | 5/1991 | Pollack et al. |
| 5,067,478 | A | 11/1991 | Berlant |
| 5,092,835 | A | 3/1992 | Schurig et al. |
| 5,158,080 | A | 10/1992 | Kallok |
| 5,181,902 | A | 1/1993 | Erickson et al. |
| 5,299,572 | A | 4/1994 | Chen et al. |
| 5,309,909 | A | 5/1994 | Gadsby et al. |
| 5,314,401 | A | 5/1994 | Tepper |
| 5,314,453 | A | 5/1994 | Jeutter |
| 5,374,283 | A | 12/1994 | Flick |
| 5,401,233 | A | 3/1995 | Erickson et al. |
| 5,449,378 | A | 9/1995 | Schouenborg |
| 5,518,495 | A | 5/1996 | Kolt |
| 5,540,735 | A | 7/1996 | Wingrove |
| 5,562,707 | A | 10/1996 | Prochazka et al. |
| 5,690,693 | A | 11/1997 | Wang et al. |
| 5,715,837 | A | 2/1998 | Chen |
| 5,725,471 | A | 3/1998 | Davey et al. |
| 5,749,909 | A | 5/1998 | Schroeppel et al. |
| 5,766,124 | A | 6/1998 | Polson |
| 5,792,187 | A | 8/1998 | Adams |
| 5,792,209 | A | 8/1998 | Varner |
| 5,833,600 | A | 11/1998 | Young |
| 5,857,957 | A | 1/1999 | Lin |
| 5,978,712 | A | 11/1999 | Suda et al. |
| 5,984,854 | A | 11/1999 | Ishikawa et al. |
| 5,995,873 | A | 11/1999 | Rhodes |
| 6,009,878 | A | 1/2000 | Weijand et al. |
| 6,024,691 | A | 2/2000 | Tepper et al. |
| 6,029,090 | A | 2/2000 | Herbst |
| 6,032,677 | A | 3/2000 | Blechman et al. |
| 6,066,084 | A | 5/2000 | Edrich et al. |
| 6,086,525 | A | 7/2000 | Davey et al. |
| 6,088,619 | A | 7/2000 | Hein et al. |
| 6,123,658 | A | 9/2000 | Schweighofer et al. |
| 6,132,386 | A | 10/2000 | Gozani et al. |
| 6,143,035 | A | 11/2000 | McDowell |
| 6,155,966 | A | 12/2000 | Parker |
| 6,179,770 | B1 | 1/2001 | Mould |
| 6,190,893 | B1 | 2/2001 | Shastri et al. |
| 6,200,259 | B1 | 3/2001 | March |
| 6,213,933 | B1 | 4/2001 | Lin |
| 6,219,575 | B1 | 4/2001 | Nemati |
| 6,256,533 | B1 | 7/2001 | Yuzhakov et al. |
| 6,261,221 | B1 | 7/2001 | Tepper et al. |
| 6,312,612 | B1 | 11/2001 | Sherman et al. |
| 6,319,241 | B1 | 11/2001 | King et al. |
| 6,334,856 | B1 | 1/2002 | Allen et al. |
| 6,349,233 | B1 | 2/2002 | Adams |
| 6,366,795 | B1 | 4/2002 | Bremer et al. |
| 6,379,313 | B1 | 4/2002 | Gozani et al. |
| 6,379,324 | B1 | 4/2002 | Gartstein et al. |
| 6,432,037 | B1 * | 8/2002 | Eini ..... A61B 5/04882 128/898 |
| 6,440,096 | B1 | 8/2002 | Lastovich et al. |
| 6,443,883 | B1 | 9/2002 | Ostrow et al. |
| 6,451,240 | B1 | 9/2002 | Sherman et al. |
| 6,471,903 | B2 | 10/2002 | Sherman et al. |
| 6,473,652 | B1 | 10/2002 | Sarwal et al. |
| 6,491,620 | B1 | 12/2002 | Davey |
| 6,493,588 | B1 | 12/2002 | Malaney et al. |
| 6,500,110 | B1 | 12/2002 | Davey et al. |
| 6,503,231 | B1 | 1/2003 | Prausnitz et al. |
| 6,511,463 | B1 | 1/2003 | Wood et al. |
| 6,527,694 | B1 | 3/2003 | Ishikawa et al. |
| 6,533,949 | B1 | 3/2003 | Yeshurun et al. |
| 6,537,242 | B1 | 3/2003 | Palmer |
| 6,553,263 | B1 | 4/2003 | Meadows et al. |
| 6,558,361 | B1 | 5/2003 | Yeshurun |
| 6,565,532 | B1 | 5/2003 | Yuzhakov et al. |
| 6,582,393 | B2 | 6/2003 | Sage, Jr. |
| 6,591,124 | B2 | 7/2003 | Sherman et al. |
| 6,595,947 | B1 | 7/2003 | Mikszta et al. |
| 6,603,987 | B2 | 8/2003 | Whitson |
| 6,611,707 | B1 | 8/2003 | Prausnitz et al. |
| 6,615,080 | B1 | 9/2003 | Unsworth et al. |
| 6,622,035 | B1 | 9/2003 | Merilainen et al. |
| 6,623,457 | B1 | 9/2003 | Rosenberg |
| 6,652,443 | B1 | 11/2003 | Struppler et al. |
| 6,652,478 | B1 | 11/2003 | Gartstein et al. |
| 6,654,636 | B1 | 11/2003 | Dev et al. |
| 6,656,147 | B1 | 12/2003 | Gertsek et al. |
| 6,663,556 | B2 | 12/2003 | Barker |
| 6,663,820 | B2 | 12/2003 | Arias et al. |
| 6,671,527 | B2 | 12/2003 | Petersson et al. |
| 6,678,556 | B1 | 1/2004 | Nolan et al. |
| 6,684,106 | B2 | 1/2004 | Herbst |
| 6,689,100 | B2 | 2/2004 | Connelly et al. |
| 6,690,959 | B2 | 2/2004 | Thompson |
| 6,692,444 | B2 | 2/2004 | Gozani et al. |
| 6,697,669 | B2 | 2/2004 | Dev et al. |
| 6,701,185 | B2 | 3/2004 | Burnett et al. |
| 6,735,474 | B1 | 5/2004 | Loeb et al. |
| 6,743,211 | B1 | 6/2004 | Prausnitz et al. |
| 6,767,341 | B2 | 7/2004 | Cho |

(56) **References Cited**

U.S. PATENT DOCUMENTS

| | | | |
|---|---|---|---|
| 6,770,022 | B2 | 8/2004 | Mechlenburg et al. |
| 6,770,480 | B1 | 8/2004 | Canham |
| 6,782,283 | B2 | 8/2004 | Schmidt et al. |
| 6,790,372 | B2 | 9/2004 | Roy et al. |
| 6,808,506 | B2 | 10/2004 | Lastovich et al. |
| 6,835,184 | B1 | 12/2004 | Sage et al. |
| 6,866,659 | B2 | 3/2005 | Nemati |
| 6,881,203 | B2 | 4/2005 | Delmore et al. |
| 6,899,838 | B2 | 5/2005 | Lastovich |
| 6,904,614 | B2 | 6/2005 | Yamazaki et al. |
| 6,908,453 | B2 | 6/2005 | Fleming et al. |
| 6,926,660 | B2 | 8/2005 | Miller |
| 6,931,277 | B1 | 8/2005 | Yuzhakov et al. |
| 6,939,311 | B2 | 9/2005 | Geiger |
| 6,941,171 | B2 | 9/2005 | Mann et al. |
| 6,960,193 | B2 | 11/2005 | Rosenberg |
| 6,962,772 | B2 | 11/2005 | Liu et al. |
| 6,972,013 | B1 | 12/2005 | Zhang et al. |
| 6,980,855 | B2 | 12/2005 | Cho |
| 7,013,179 | B2 | 3/2006 | Carter et al. |
| 7,027,478 | B2 | 4/2006 | Ackley |
| 7,032,302 | B1 | 4/2006 | Schmidt et al. |
| 7,045,069 | B2 | 5/2006 | Ozeryansky |
| 7,047,070 | B2 | 5/2006 | Wilkinson et al. |
| 7,048,723 | B1 | 5/2006 | Frazier et al. |
| 7,079,355 | B2 | 7/2006 | Hsiao et al. |
| 7,083,592 | B2 | 8/2006 | Lastovich et al. |
| 7,104,947 | B2 | 9/2006 | Riehl |
| 7,115,108 | B2 | 10/2006 | Wilkinson et al. |
| 7,117,034 | B2 | 10/2006 | Kronberg |
| 7,130,696 | B2 | 10/2006 | Carter et al. |
| 7,132,054 | B1 | 11/2006 | Kravitz et al. |
| 7,153,256 | B2 | 12/2006 | Riehl et al. |
| 7,187,976 | B2 | 3/2007 | Duncan et al. |
| 7,226,439 | B2 | 6/2007 | Prausnitz et al. |
| 7,262,068 | B2 | 8/2007 | Roy et al. |
| 7,273,474 | B2 | 9/2007 | Chang et al. |
| 7,285,113 | B2 | 10/2007 | Yeshurun |
| 7,315,758 | B2 | 1/2008 | Kwiatkowski et al. |
| 7,316,665 | B2 | 1/2008 | Laurent et al. |
| 7,320,664 | B2 | 1/2008 | Riehl et al. |
| 7,332,197 | B2 | 2/2008 | Wood et al. |
| 7,332,339 | B2 | 2/2008 | Canham |
| 7,344,499 | B1 | 3/2008 | Prausnitz et al. |
| 7,367,936 | B2 | 5/2008 | Myers et al. |
| D571,920 | S | 6/2008 | Juliana et al. |
| 7,396,326 | B2 | 7/2008 | Ghiron et al. |
| 7,410,476 | B2 | 8/2008 | Wilkinson et al. |
| 7,415,299 | B2 | 8/2008 | Zimmermann et al. |
| 7,416,541 | B2 | 8/2008 | Yuzhakov et al. |
| 7,429,333 | B2 | 9/2008 | Chiou et al. |
| 7,473,244 | B2 | 1/2009 | Frazier et al. |
| 7,481,337 | B2 | 1/2009 | Luharuka et al. |
| 7,497,980 | B2 | 3/2009 | Xu et al. |
| 7,500,911 | B2 | 3/2009 | Johnson et al. |
| 7,520,848 | B2 | 4/2009 | Schneider et al. |
| 7,522,061 | B2 | 4/2009 | Rondoni et al. |
| 7,530,968 | B2 | 5/2009 | Gonnelli |
| 7,536,226 | B2 | 5/2009 | Williams et al. |
| 7,556,615 | B2 | 7/2009 | Pettis et al. |
| 7,556,821 | B2 | 7/2009 | Ameri et al. |
| 7,560,036 | B2 | 7/2009 | Golubovic-Liakopoulos et al. |
| 7,570,992 | B2 | 8/2009 | Nolan et al. |
| 7,572,405 | B2 | 8/2009 | Sherman et al. |
| 7,574,256 | B2 | 8/2009 | Carter |
| 7,578,954 | B2 | 8/2009 | Gartstein et al. |
| 7,582,069 | B2 | 9/2009 | Laurent et al. |
| 7,588,552 | B2 | 9/2009 | Yeshurun et al. |
| 7,591,806 | B2 | 9/2009 | Xu |
| 7,627,938 | B2 | 12/2009 | Kim et al. |
| 7,628,761 | B2 | 12/2009 | Gozani et al. |
| 7,647,112 | B2 | 1/2010 | Tracey et al. |
| 7,648,484 | B2 | 1/2010 | Yeshurun et al. |
| 7,651,946 | B2 | 1/2010 | Wilke et al. |
| 7,658,728 | B2 | 2/2010 | Yuzhakov |
| 7,941,201 | B2 | 5/2011 | Chiou et al. |
| 8,308,665 | B2 | 11/2012 | Harry et al. |
| 8,430,805 | B2 | 4/2013 | Burnett et al. |
| 8,435,166 | B2 | 5/2013 | Burnett et al. |
| 8,588,884 | B2 | 11/2013 | Hegde et al. |
| 8,660,646 | B2 | 2/2014 | Laing et al. |
| 8,805,510 | B2 | 8/2014 | Chancellor et al. |
| 8,812,114 | B2 | 8/2014 | Van den biggelaar et al. |
| 8,818,520 | B2 | 8/2014 | Laing et al. |
| 8,954,153 | B2 | 2/2015 | Boggs |
| 9,002,477 | B2 | 4/2015 | Burnett |
| 9,005,102 | B2 | 4/2015 | Burnett et al. |
| 9,056,194 | B2 | 6/2015 | Van den biggelaar et al. |
| 9,076,187 | B1 | 7/2015 | Laing et al. |
| 9,245,265 | B2 | 1/2016 | Laing et al. |
| 9,265,941 | B2 | 2/2016 | Van den biggelaar et al. |
| 9,339,641 | B2 | 5/2016 | Rajguru et al. |
| 9,387,338 | B2 | 7/2016 | Burnett |
| 9,610,459 | B2 | 4/2017 | Burnett et al. |
| 9,630,004 | B2 | 4/2017 | Rajguru et al. |
| 9,757,584 | B2 | 9/2017 | Burnett |
| 10,786,669 | B2 | 9/2020 | Rajguru et al. |
| 2002/0007128 | A1 | 1/2002 | Ives et al. |
| 2002/0028991 | A1 | 3/2002 | Thompson |
| 2002/0040233 | A1 | 4/2002 | George et al. |
| 2002/0055761 | A1 | 5/2002 | Mann et al. |
| 2002/0082465 | A1 | 6/2002 | Bashford et al. |
| 2002/0099323 | A1 | 7/2002 | Dev et al. |
| 2002/0111777 | A1 | 8/2002 | David |
| 2002/0133129 | A1 | 9/2002 | Arias et al. |
| 2002/0138116 | A1 | 9/2002 | Bertolucci |
| 2002/0183804 | A1 | 12/2002 | Malaney et al. |
| 2662/6183647 | | 12/2002 | Gozani et al. |
| 2003/0003968 | A1 | 1/2003 | Muraki |
| 2003/0004392 | A1 | 1/2003 | Tanner et al. |
| 2003/0028072 | A1 | 2/2003 | Fischell et al. |
| 2003/0144625 | A1 | 7/2003 | Sherman et al. |
| 2003/0158583 | A1 | 8/2003 | Burnett et al. |
| 2003/0158585 | A1 | 8/2003 | Burnett |
| 2003/0216729 | A1 | 11/2003 | Marchitto et al. |
| 2003/0217754 | A1 | 11/2003 | Thomas et al. |
| 2004/0010276 | A1 | 1/2004 | Jacobs et al. |
| 2004/0015188 | A1 | 1/2004 | Coulter |
| 2004/0054393 | A1 | 3/2004 | Stemme et al. |
| 2004/0082875 | A1 | 4/2004 | Donoghue et al. |
| 2004/0092860 | A1 | 5/2004 | Dev et al. |
| 2004/0102819 | A1 | 5/2004 | Zou et al. |
| 2004/0111139 | A1 | 6/2004 | McCreery |
| 2004/0122787 | A1 | 6/2004 | Avanash et al. |
| 2004/0127939 | A1 | 7/2004 | Grey |
| 2004/0138517 | A1 | 7/2004 | Osorio et al. |
| 2004/0146611 | A1 | 7/2004 | Arias et al. |
| 2004/0147964 | A1 | 7/2004 | Nolan et al. |
| 2004/0173220 | A1 | 9/2004 | Harry et al. |
| 2004/0210254 | A1 | 10/2004 | Burnett et al. |
| 2004/0210282 | A1 | 10/2004 | Flock et al. |
| 2004/0237170 | A1 | 12/2004 | Yamazaki et al. |
| 2005/0021104 | A1 | 1/2005 | Dilorenzo |
| 2005/0029223 | A1 | 2/2005 | Yeshurun |
| 2005/0033380 | A1 | 2/2005 | Tanner et al. |
| 2005/0099290 | A1 | 5/2005 | Govari |
| 2005/0107654 | A1 | 5/2005 | Riehl |
| 2005/0143783 | A1 | 6/2005 | Boveja et al. |
| 2005/0143789 | A1 | 6/2005 | Whitehurst et al. |
| 2005/0171576 | A1 | 8/2005 | Williams et al. |
| 2005/0203602 | A1 | 9/2005 | Wallace et al. |
| 2005/0240230 | A1 | 10/2005 | Preston et al. |
| 2005/0277998 | A1 | 12/2005 | Tracey et al. |
| 2005/0283202 | A1 | 12/2005 | Gellman |
| 2005/0283204 | A1 | 12/2005 | Buhlmann et al. |
| 2006/0004244 | A1 | 1/2006 | Phillips et al. |
| 2006/0015153 | A1 | 1/2006 | Gliner et al. |
| 2006/0016452 | A1 | 1/2006 | Goetz et al. |
| 2006/0030845 | A1 | 2/2006 | Leung et al. |
| 2006/0047316 | A1 | 3/2006 | Fischell et al. |
| 2006/0047326 | A1 | 3/2006 | Wheeler |
| 2006/0049957 | A1 | 3/2006 | Surgenor et al. |
| 2006/0052839 | A1 | 3/2006 | Kim et al. |
| 2006/0069415 | A1 | 3/2006 | Cameron et al. |

(56) **References Cited**

U.S. PATENT DOCUMENTS

2006/0084938 A1 4/2006 Zhang et al.
2006/0115130 A1 6/2006 Kozlay
2006/0122454 A1 6/2006 Riehl et al.
2006/0122660 A1 6/2006 Boveja et al.
2006/0135844 A1 6/2006 Alekseyenko
2006/0155345 A1 7/2006 Williams et al.
2006/0161039 A1 7/2006 Juliana et al.
2006/0173261 A1 8/2006 Kall et al.
2006/0178576 A1 8/2006 Weber et al.
2006/0184211 A1 8/2006 Gaunt et al.
2006/0199159 A1 9/2006 Ghiron et al.
2006/0276702 A1 12/2006 Mcginnis
2007/0021712 A1 1/2007 Bernard et al.
2007/0021803 A1 1/2007 Deem et al.
2007/0027353 A1 2/2007 Ghiron et al.
2007/0027354 A1 2/2007 Riehl et al.
2007/0027355 A1 2/2007 Riehl et al.
2007/0142885 A1 6/2007 Hantash et al.
2007/0208212 A1 9/2007 Dilorenzo
2007/0250162 A1 10/2007 Royalty
2007/0265489 A1 11/2007 Fowler et al.
2007/0265675 A1* 11/2007 Lund ..... A61N 1/36007 607/41
2007/0276318 A1 11/2007 Henley
2007/0282246 A1 12/2007 Henley
2008/0004484 A1 1/2008 Wieraszko et al.
2008/0033510 A1 2/2008 Herregraven et al.
2008/0058874 A1 3/2008 Westlund et al.
2008/0063866 A1 3/2008 Allen et al.
2008/0065167 A1 3/2008 Boggs et al.
2008/0097142 A1 4/2008 Savage
2008/0114199 A1 5/2008 Riehl et al.
2008/0177128 A1 7/2008 Riehl et al.
2008/0177347 A1 7/2008 Tehrani et al.
2008/0183070 A1 7/2008 Unal et al.
2008/0200748 A1 8/2008 Testanl et al.
2008/0224808 A1 9/2008 Ghiron et al.
2008/0262287 A1 10/2008 Dussau
2008/0288035 A1 11/2008 Gill et al.
2008/0300655 A1 12/2008 Cholette
2008/0306325 A1 12/2008 Burnett et al.
2008/0312725 A1 12/2008 Penner
2009/0030337 A1 1/2009 Gozani et al.
2009/0054950 A1 2/2009 Stephens
2009/0073991 A1 3/2009 Landrum et al.
2009/0076336 A1 3/2009 Mazar et al.
2009/0076340 A1 3/2009 Libbus et al.
2009/0076344 A1 3/2009 Libbus et al.
2009/0076345 A1 3/2009 Manicka et al.
2009/0076363 A1 3/2009 Bly et al.
2009/0076364 A1 3/2009 Libbus et al.
2009/0076397 A1 3/2009 Libbus et al.
2009/0076410 A1 3/2009 Libbus et al.
2009/0076559 A1 3/2009 Libbus et al.
2009/0076565 A1 3/2009 Surwit
2009/0099623 A1 4/2009 Bentwich
2009/0118777 A1 5/2009 Iki et al.
2009/0132018 A1 5/2009 DiUbaldi et al.
2009/0162570 A1 6/2009 Swenberg et al.
2009/0171236 A1 7/2009 Davies
2009/0198305 A1 8/2009 Naroditsky et al.
2009/0227829 A1 9/2009 Burnett et al.
2009/0227831 A1 9/2009 Burnett et al.
2009/0234179 A1 9/2009 Burnett et al.
2009/0234410 A1 9/2009 Libbus et al.
2009/0264792 A1 10/2009 Mazar
2009/0292194 A1 11/2009 Libbus et al.
2010/0016929 A1 1/2010 Prochazka
2010/0022864 A1 1/2010 Cordero et al.
2010/0049021 A1 2/2010 Jina et al.
2010/0056881 A1 3/2010 Libbus et al.
2010/0057147 A1 3/2010 Fassih et al.
2010/0057149 A1 3/2010 Fahey
2010/0114259 A1 5/2010 Herregraven et al.
2010/0119482 A1 5/2010 Yun et al.
2010/0160712 A1 6/2010 Burnett et al.
2010/0161005 A1 6/2010 Wahlgren et al.
2010/0168501 A1 7/2010 Burnett et al.
2010/0204538 A1 8/2010 Burnett et al.
2010/0222629 A1 9/2010 Bumett et al.
2010/0222630 A1 9/2010 Mangrum et al.
2010/0318009 A1 12/2010 Stanley
2011/0021863 A1 1/2011 Burnett et al.
2011/0144468 A1 6/2011 Boggs et al.
2011/0264163 A1 10/2011 Tracey et al.
2011/0270140 A1 11/2011 Israeli
2011/0295100 A1 12/2011 Hegde et al.
2012/0059432 A1 3/2012 Emborg et al.
2012/0101326 A1 4/2012 Simon et al.
2012/0302821 A1 11/2012 Burnett
2013/0006322 A1 1/2013 Tai
2013/0072746 A1 3/2013 Burnett et al.
2013/0072835 A1 3/2013 Harry et al.
2013/0310909 A1 11/2013 Simon et al.
2014/0046423 A1 2/2014 Rajguru et al.
2014/0148870 A1 5/2014 Burnett
2014/0213842 A1 7/2014 Simon et al.
2014/0249595 A1 9/2014 Chancellor et al.
2014/0288613 A1 9/2014 Laing et al.
2015/0190648 A1 7/2015 Fischell et al.
2015/0202454 A1 7/2015 Burnett
2015/0227909 A1 8/2015 Laing et al.
2015/0260471 A1 9/2015 Azhocar
2016/0067515 A1 3/2016 Burnett et al.
2016/0067517 A1 3/2016 Burnett
2016/0074671 A1 3/2016 Bumett et al.
2016/0193466 A1 7/2016 Burnett
2018/0050216 A9 2/2018 Burnett
2018/0133472 A1 5/2018 Tai
2020/0139120 A1 5/2020 Rajguru et al.

FOREIGN PATENT DOCUMENTS

GB 2336544 10/1999
JP 2000-254239 9/2000
WO WO 2003/070317 8/2003
WO WO 2006/061688 6/2006
WO WO 2008/032279 3/2008
WO WO 2008/042902 4/2008
WO WO 2008/115426 9/2008
WO WO 2010/047599 4/2010
WO WO 2010/084482 7/2010
WO WO 2011/011748 1/2011
WO WO 2011/011749 1/2011
WO WO 2011/053607 5/2011
WO WO 2011/053661 5/2011
WO WO 2011/150332 12/2011
WO WO 2012/040243 3/2012

OTHER PUBLICATIONS

"Tibial Nerve." Wikipedia, accessed Oct. 5, 2020, https://en.wikipedia.org/wiki/Tibial_nerve. (Year: 2020).*

"Bioflex® RX754P, Single Coated Medical Pressure Sensitive Adhesive Tape," *Technical Data*, 2 pages, Dec. 2005.

3M Corporation, 3M™ XYZ/Isotropic Electrically Conductive Adhesive Transfer Tape 9707, *3M Electronics Markets Materials Division*, 60-5002-0350-4, 8 pages, 2004, 3M.

Aaron, Roy K. et al., "Therapeutic Effects of Electromagnetic Fields in the Stimulation of Connective Tissue Repair," *Journal of Cellular Biography*, 52(1):42-6, May 1993, Wiley-Liss, Inc.

AmGel Technologies, "AG603 Sensing Gel, Sensing Gel Designed for ECG Applications," AG603-3/10, 1 page, 2010.

AmGel Technologies, "AG702 Stimulating Gel, Stimulating Gel Designed for carbon film," AG702-02/06, 1 page, 2006.

AmGel Technologies, "AG902-184/229 Grounding Gel, Grounding Gel Designed for Electrosurgical Pads," AG902 Series, 1 page, 2010.

AmGel Technologies, "Release Films," 1 Page, Jul. 25, 2006, Revision 1.

(56) **References Cited**

OTHER PUBLICATIONS

Balmaseda, Marion T. Jr., et al., "Burns in Functional Electric Stimulation: Two Case Reports," *Archives of Physical Medicine and Rehabilitation*, vol. 38., pp. 452-453, Jul. 1987.
Biowave Corporation, "510(k) Summary for the Biowave Deepwave Neuromodulation Pain Therapy Device," 6 pages, Appendix B, Dec. 13, 2005.
Biowave Corporation, "510(k) Summary for the Biowave Deepwave Neuromodulation Pain Therapy Device," 7 pages, Appendix E, Aug. 15, 2006.
Biowave Corporation, "Percutaneous Neuromodulation Pain Therapy System," *deepwave*, RevB/080926, 2008.
BlueCross BlueShield of Kansas City, "Percutaneous Electrical Nerve Stimulation (PENS) and Percutaneous Neuromodulation Therapy (PNT)," 7 pages, 1988.
Bodhale, D.W. et al., "Design, fabrication and analysis of silicon microneedles for transdermal drug delivery applications," *Proceedings of the 3rd International Conference on the Development of BME in Vietnam*, pp. 84-88, Jan. 11-14, 2010.
Bruce, C.J. et al., "Intracardiac Echocardiography," *European Journal Echocardiography*, vol. 2, pp. 234-244, 2001, The European Society of Cardiology.
Cabodevila, G. et al., "An overview on drug delivery usina microneedles", *Institute FEMTO-ST, Dept LPMO*, 24 pages, Oct. 2005, Workshop Micro Dosing Systems.
Certified Pulsed Signal Therapy Centers, http://www.certifiedpst.com, 10 pages.
Choi, S. et al., "Microneedle Electrode Array for Electroporation of Skin for Gene Therapy," 2 pages, 2005, Controlled Release Society 32nd Annual Meeting and Exposition Transactions.
Curley, S. et al., "Radiofrequency Ablation of Unresectable Primary and Metastatic Hepatic Malignancies," *Annals of Surgery*, vol. 230(1):1-8, 1999 Lippincott Williams & Wilkins, Inc.
CystoMedix, Inc., "Percutaneous Tibial Nerve Stimulation via Urgent® PC Neuromodulation System—An Emerging Technology for managing Overactive Bladder," *Business Briefing: Global Surgery*, 6 pages, 2004.
EBI, L.P., EBI Bone Healing System, http://www.ebimedical.com/products/fracture/bonehealing.html, 5 pages.
Fallon Community Health Plan, "Spinal Cord Stimulation," 4 pages, 2006.
Grundfest H. et al., "Stainless Steel Micro-Needle Electrodes Made by Electrolytic Pointing," *Review of Scientific Instruments*, vol. 21(4):2 pages, 1950, American Institute of Physics.
Harvinder S. Gil et al., "Effect of microneedle design on pain in human subjects," *NIH Public Access Author Manuscript*. 24(7): 585-594, Sep. 2008, Clinical Journal of Pain.
Huber, D.E. et al., "Popliteal Vein Compression Under General Anaesthesia," *European Journal of Vascular and Endovascular Surgery*, vol. 37, pp. 464-469, 2009, Elsevier Ltd.
Isseroff, Roslyn R. et al., "Beta Adrenergic Receptor (βAR) Signaling as a novel target for optimizing skin wound healing", 5 pages.
Jacobson, Jerry I. et al., "Low-Amplitude, Extremely Low Frequency Magnetic Fields for the Treatment of Osteoarthritic Knees: A Double-Blind Clinical Study," *Electromagnetic Fields and Human Health. Fundamental and Applied Research*, pp. 363-364, Sep. 17-24, 2002, Proceedings of the Third International Conference.
Jasper, H. et al., "Unipolar Electromyograms of Normal and Denervated Human Muscle," pp. 231-244, Oct. 12, 1948, Department of Neurology and Neurosurgery, McGill University, and Montreal Neurological Institute.
Kravitz, S. et ai., Microneedles for In-Situ/In-vivo Electrochemical Sensor Applications, 1 page, Sandia National Laboratories.
Kurtzke, John F., "Epidemiology of Spinal Cord injury," *IV Panamerican Congress of Neurology*, 18(2-3): 157-90, 93, 1975.
Lin et al., "Magnetic Stimulation of the Bladder in Dogs," AAEM Annual Meeting 1993, *Muscle & Nerve*, Oct. 1993 (Abstract).
Luttge, R. "Microneedle array electrode for human EEG recording," IFMBE Proceedings 22, pp. 1246-1249, 2008, Springer-Verag Berlin Heidelberg 2009.
Maass et al., "Contactless Nerve Stimulation and Signal Detection by Inductive Transducer," *Symposium on Application of Magnetism in Bioengineering*, 1969.
McFarlane, J.P. et al., "Acute Suppression of Idiopathic Detrusor Instability with Magnetic Stimulation of the Sacral Nerve Roots," *British Journal of Urology*, 80(5): 734-41, Nov. 1997.
Morrison, P.R. et al. "Radiofrequency Ablation of Thoracic Lesions: Part I, Experiments in the Normal Porcine Thorax," *American Journal of Roentgenology*, 2005;184:375-380, Feb. 2005, American Roentgen Ray Society.
NeuroStar TMS Therapy, NeuroStar TMS Therapy® Recipient of Medical Design Excellence Award, *PRNewswire*, 3 pages, Apr. 2009.
Newmark, Inc., "Standard Products, Highest Quality Components, Designed & Produced Exclusively for Electrode Manufacturers," *Innovation by Design Newmark*, 2 pages, www.newmarkine.com/std_prods.htm, printed on May 3, 2010.
Noble, J.H. et al., "Automatic segmentation of the facial nerve and chorda tympani in CT images using spatially dependent features values", Medical Phsysics, vol. 35(12), pp. 5375-5384, Dec. 2008, American Association Physical Medicine.
Patel, G. et al., "Microneedles: The option for painless delivery," www.pharmainfo.net/reviews/microneedles-option-painless-delivery, 6 pages, printed on Sep. 9, 2008.
*Pubmed, U.S. National Library of Medicine National institutes of Health*, microneedle array electrode—Pub Med results, www.ncbi.nlm.nig.gov/sites/entrez, 2 pages, Search performed on Apr. 22, 2010.
*Pubmed, U.S. National Library of Medicine National Institutes of Health*, microneedle electrode—Pub Med results, www.ncbi.nlm.nig.gov/sites/entrez, 7 pages, Search performed on Apr. 22, 2010.
Schaefer, O. et al., "CT-guided radiofrequency ablation of a bronchogenic carcinoma," *The British Journal of Radiology*, 76 (2003), pp. 268-270, 2003, The British Institute of Radiology.
Shafik, Ahmed, "Magnetic Stimulation: A Novel Method for Inducing Evacuation of the Neuropathic Rectum and Urinary Bladder in a Canine Model," *Urology* 54(2):368-372, Aug. 1999.
Sheridan. MT. et al., "Pretreatment apoptosis in carcinoma of the cervix correlates with changes in tumour oxygenation during radiotherapy," *British Journal of Cancer*, 82(6):1177-1182, 2000 Cancer Research Campaign.
Sivagangabalan, G. et ai., "Comparison of Electroanatomic Contact and Noncontact Mapping of Ventricular Scar in a Postinfarct Ovine Model With Intramural Needle Electrode Recording and Histological Validation," *Circulation: Arrhythmia and Eiectrophysioiogy, Journal of the American Heart Association*, vol. 1:363-369, 2008, American Heart Association.
Solbiati, L. et al., "Percutaneous US-guided Radio-Frequency Tissue Ablation of Liver Metastases: Treatment and Follow-up in 16 Patients," *Radiology*, 202(1):195-203, 1997 L.S. RSNA.
The Magstim Company Ltd, "Air Film Coil," *Magstim*, 4 pages, 2007.
Thon, W.F. et al., "Neuromodulation of voiding dysfunction and pelvic pain," *World Journal of Urology*, vol. 9: pp. 138-141, 1991, Springer-Verlag.
Trock, David H., "Electromagnetic Fields and Magnets Investigational Treatment for Musculoskeletal Disorders," *Rheumatic Diseases Clinics of North America*, vol. 26, No. 1., Feb. 2000.
Trock, David H., et al., "The Effect of Pulsed Electromagnetic Fields in the Treatment of Osteoarthritis of the Knee and Cervical Spine. Report of Randomized, Double Blind, Placebo Controlled Trials," *The Journal of Rheumatology*, 1903-1911, 1994.
Tyco Adhesives, "2932 Designed Adhesives," *Specialty Tape Group*, 1 page.
vanSonnenberg, E. et al., "Radiofrequency Ablation of Thoracic Lesions: Part 2, Initial Clinical Experience—Technical and Multidisciplinary Considerations in 30 Patients," *American Journal of Roentgenology*, 2005;184:381-390, Feb. 2005, American Roentgen Ray Society.

(56) **References Cited**

OTHER PUBLICATIONS

Wanich, T. et al, "A Randomized Placebo-Controlled Study To Determine Safety and Efficacy In Terms Of Pain Reduction, Increased Range Of Motion, And Reduced Pain Medications, For A Novel Percutaneous Neuromodulation Pain Therapy Device ("Deepwave®") Following Post-Operative Treatments For Total Knee Replacement Procedures," American Academy of Orthopaedic Surgeons 2009 Annual Meeting, 6 pages, Feb. 25-28, 2008, Biowave Corporation.
Warwick, K. et al., "The Application of Implant Technology for Cybernetic Systems," *Archives of Neurology*, vol. 60:1369-1373, Oct. 2003, American Medical Association.
Wijkstrda et al., "Selective Stimulation and Blocking of Sacral Nerves: Research Setup and Preliminary Results," *Annual International Conference of the IEEE Engineering in Medicine and Biology Society*, vol. 13, No. 2, 1991.
Wilke, N. et al., "Fabrication and Characterisation of Microneedle Electrode Arrays using Wet Etch Technologies," 5 pages, Oct. 20-21, 2004, EMN04, NMRC, University College.
Zhao, M., "Genetic Analysis of Electric Signal-directed Cell Movement," 33 pages, Apr. 8, 2008, Modelling Complex Biological Systems in the Context of Genomics.
Zoll Lifecor Corporation, "What is the LifeVest Wearable Defibrillator," http://www.lifecor.com/about_lifevest/about.asp#, 1 page, printed on Jan. 7, 2011.
U.S. Appl. No. 12/695,087, filed Jan. 27, 2010.
U.S. Appl. No. 11/866,329, filed Oct. 2, 2007.
U.S. Appl. No. 12/508,529, filed Jul. 23. 2009.
U.S. Appl. No. 12/469,625, filed May 20, 2009.
U.S. Appl. No. 12/469,358, filed May 20, 2009.
U.S. Appl. No. 12/469,365, filed May 20, 2009.
U.S. Appl. No. 12/606,941, filed Oct. 27, 2009.
U.S. Appl. No. 12/509,304, filed Jul. 24, 2009.
U.S. Appl. No. 12/509,345, filed Jul. 24, 2009.
U.S. Appl. No. 13/457,228, filed Apr. 26, 2012.
U.S. Appl. No. 14/097,568, filed Dec. 5, 2013.
U.S. Appl. No. 14/685,278, filed Apr. 13. 2015.
U.S. Appl. No. 14/949,735, filed Nov. 23, 2015.
U.S. Appl. No. 12/509,362, filed Jul. 24, 2009.
U.S. Appl. No. 15/436,538, filed Feb. 17, 2017.
U.S. Appl. No. 13/456,016, filed Apr. 25, 2012.
U.S. Appl. No. 14/085,639, filed Nov. 20, 2013.
U.S. Appl. No. 14/676,635, filed Apr. 1, 2015.
U.S. Appl. No. 14/931,702, filed Nov. 3, 2015.
U.S. Appl. No. 15/056,910, filed Feb. 29, 2016.
U.S. Appl. No. 12/790,619, filed May 28, 2010.
U.S. Appl. No. 13/840,936, filed Mar. 15, 2013.
U.S. Appl. No. 15/084,356, filed Mar. 29, 2016.
U.S. Appl. No. 15/474,875, filed Mar. 3, 2017.

* cited by examiner

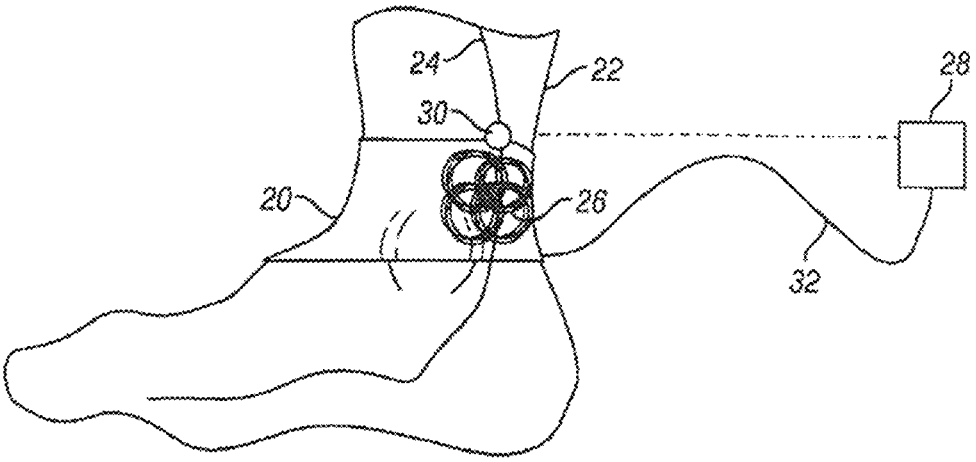


FIG. 1

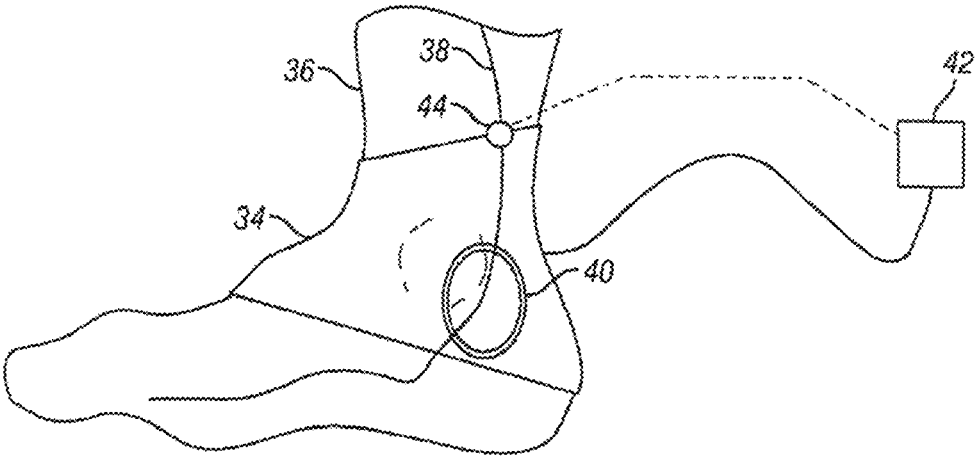


FIG. 2

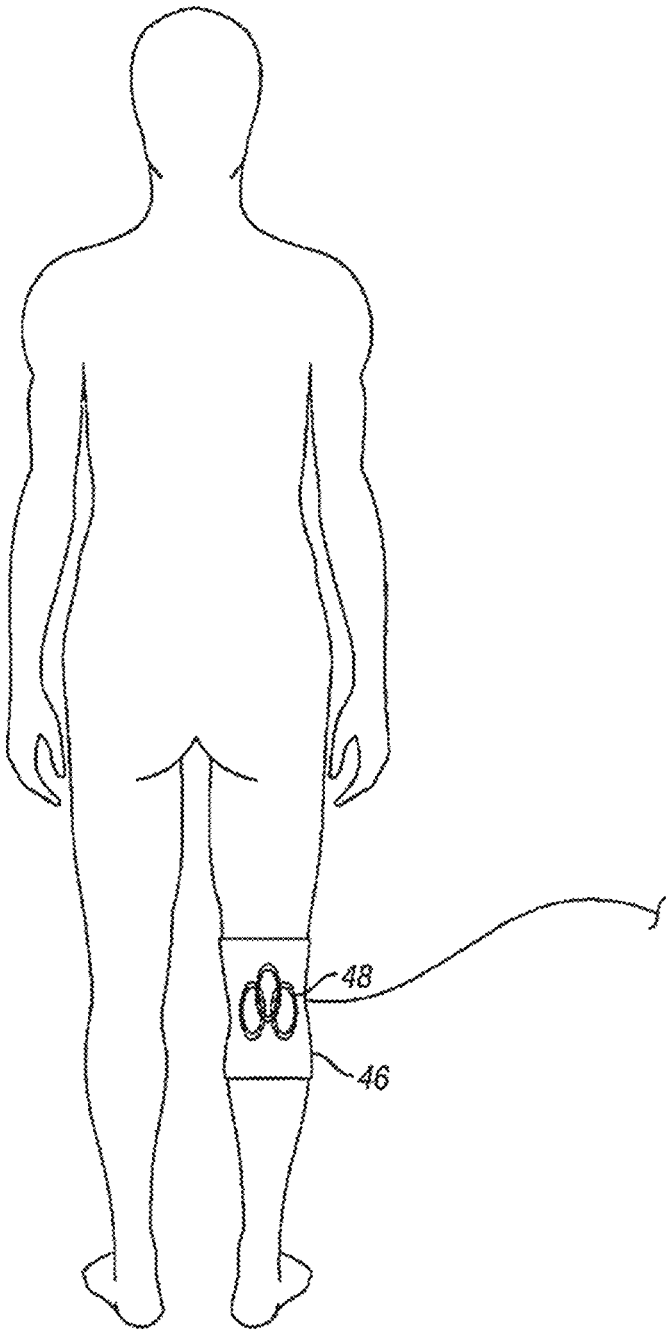


FIG. 3

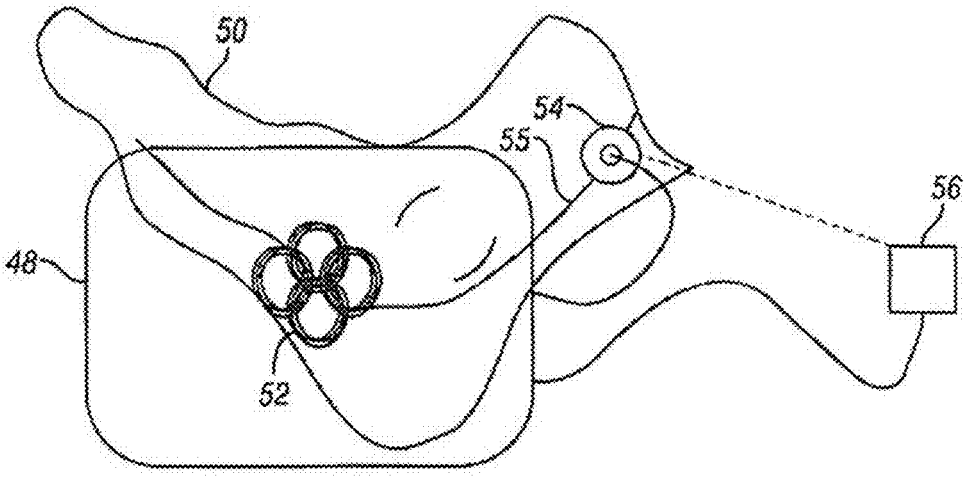


FIG. 4

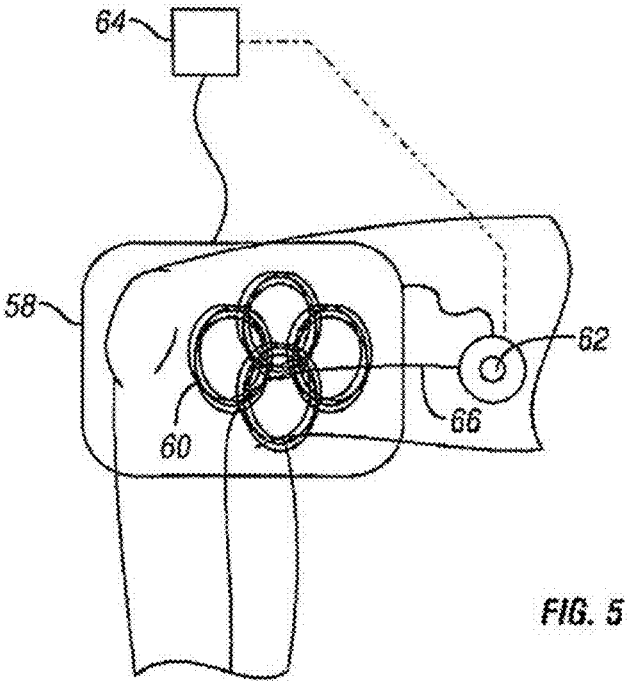


FIG. 5

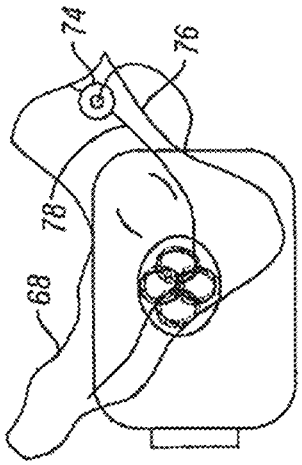


FIG. 6A




FIG. 6B

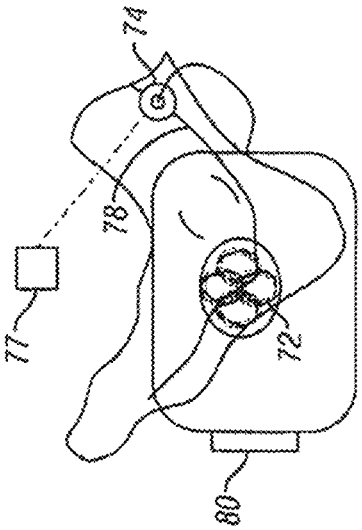


FIG. 6C

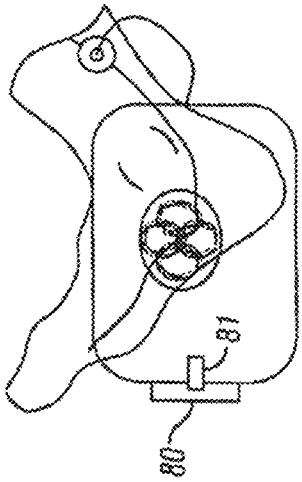


FIG. 6D

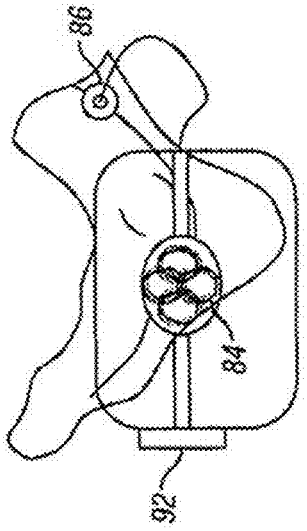


FIG. 7B

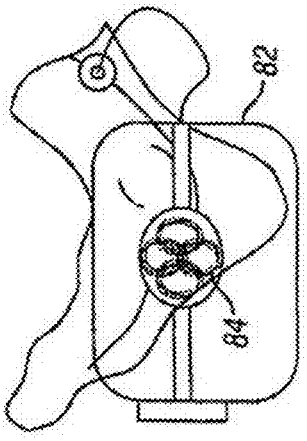


FIG. 7D

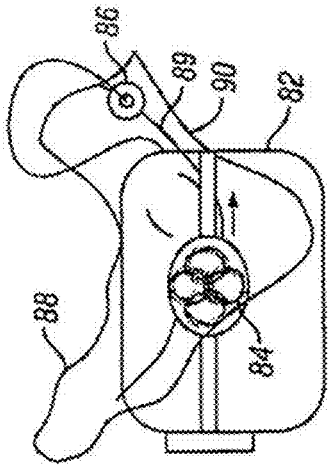


FIG. 7A

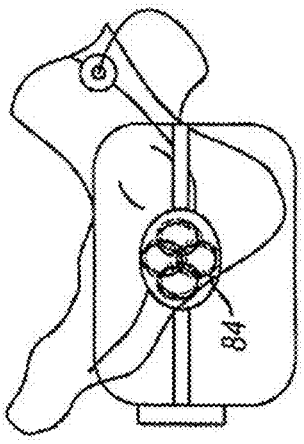


FIG. 7C

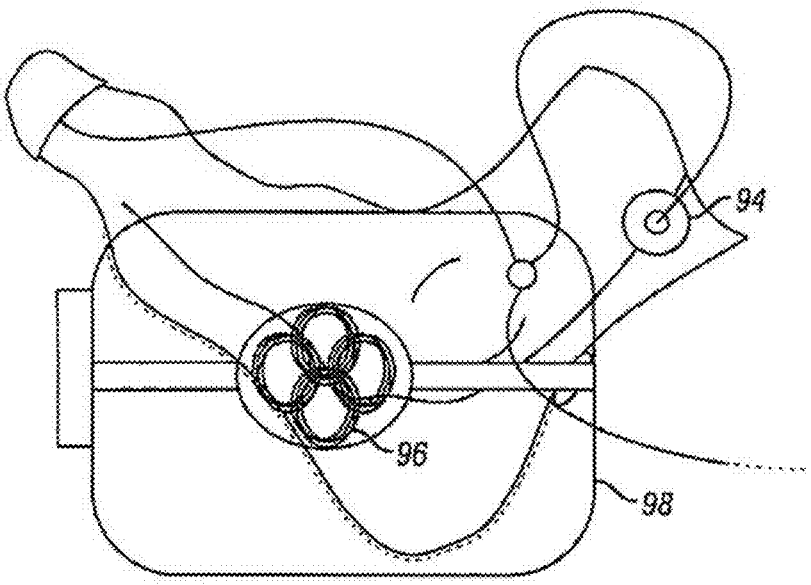


FIG. 8

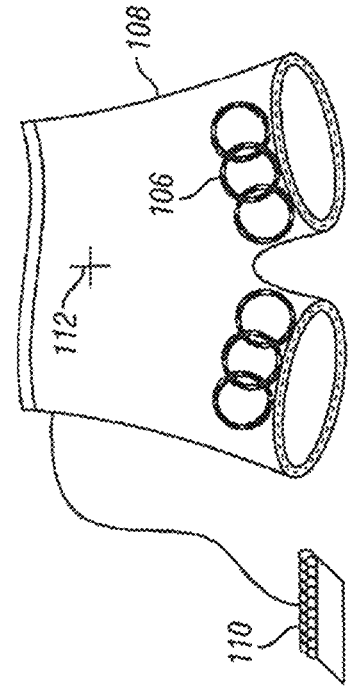


FIG. 9B

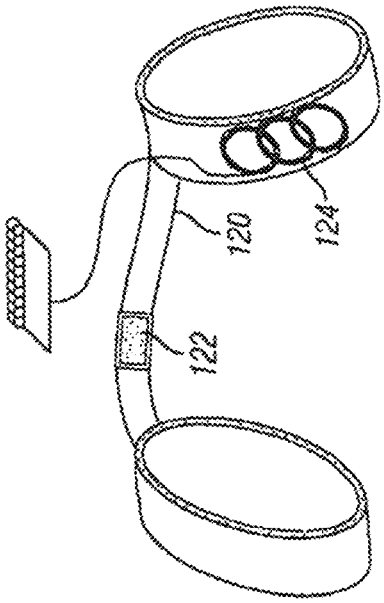


FIG. 9D

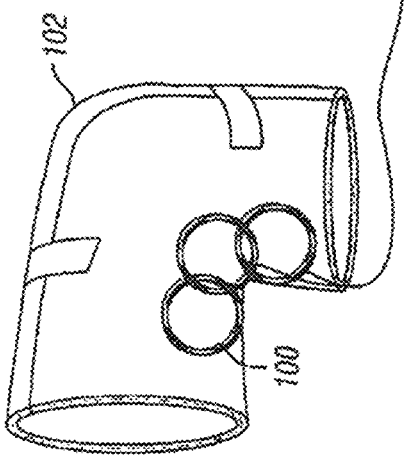


FIG. 9A

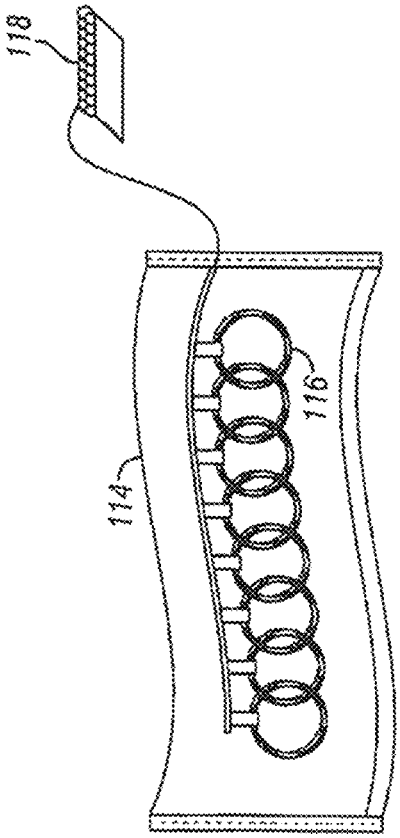


FIG. 9C

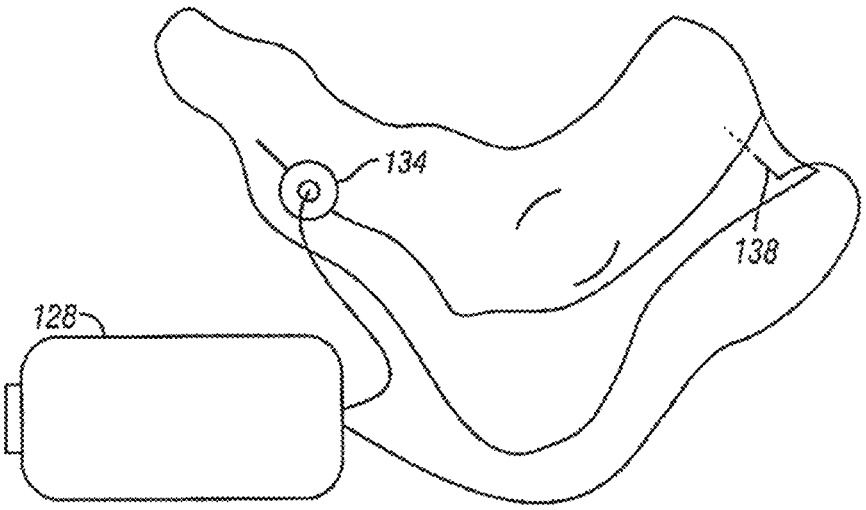


FIG. 10

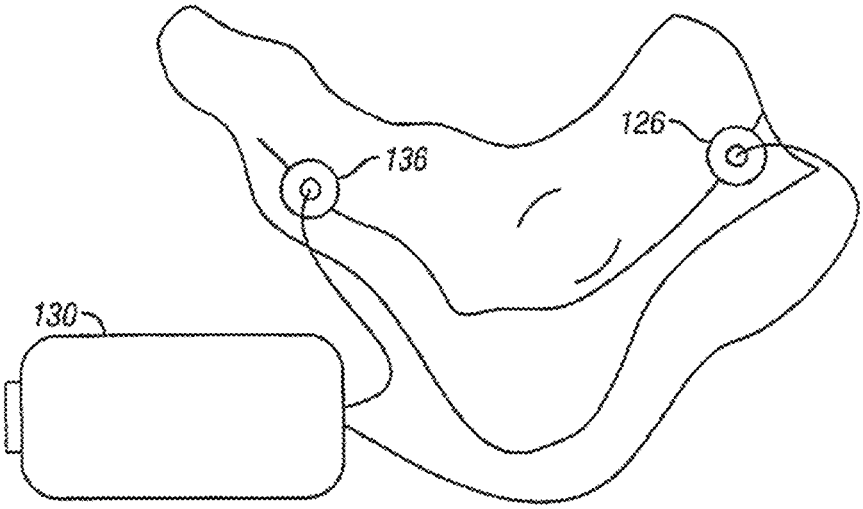


FIG. 11

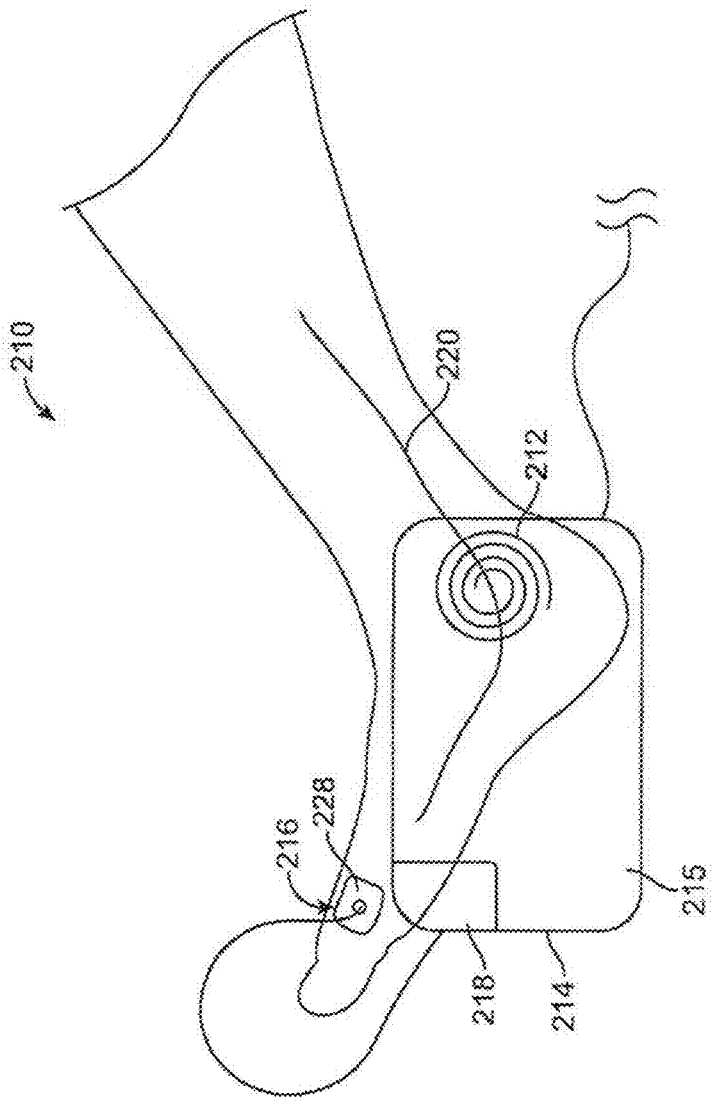


FIG. 12

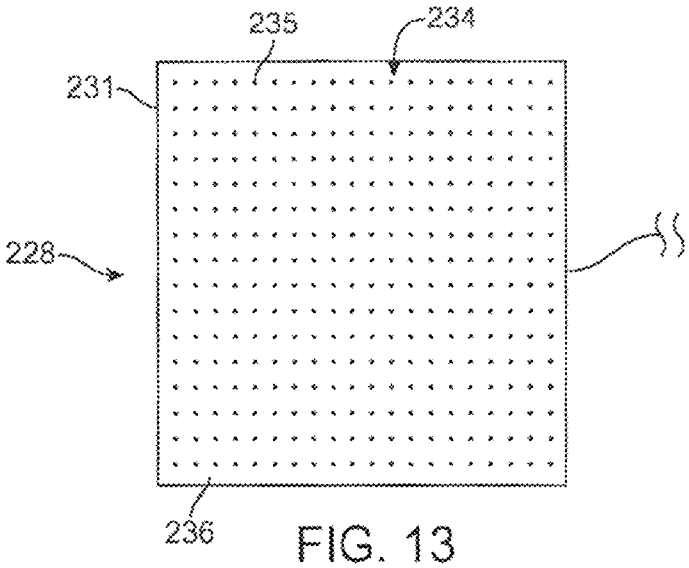


FIG. 13

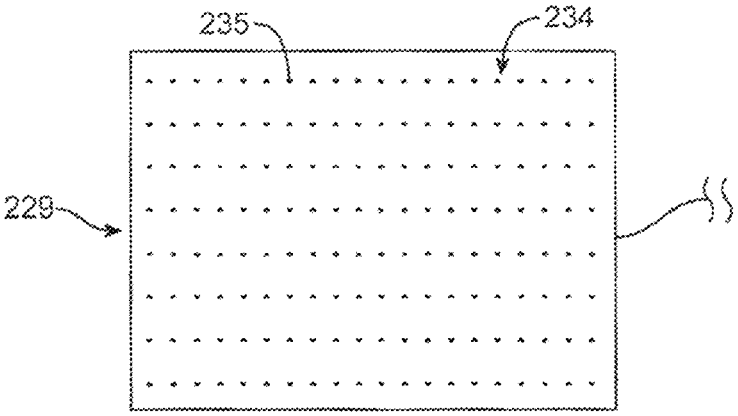


FIG. 14

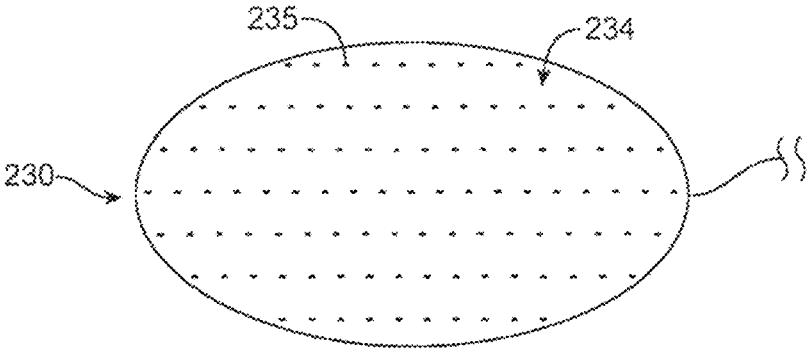


FIG. 15

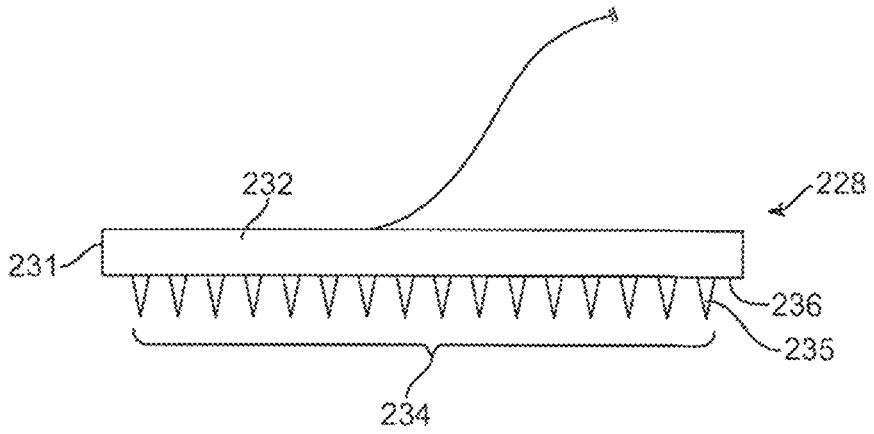


FIG. 16

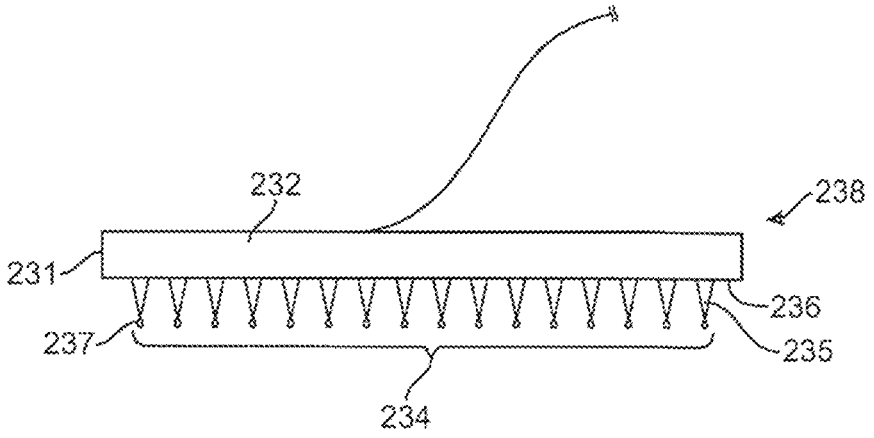


FIG. 17

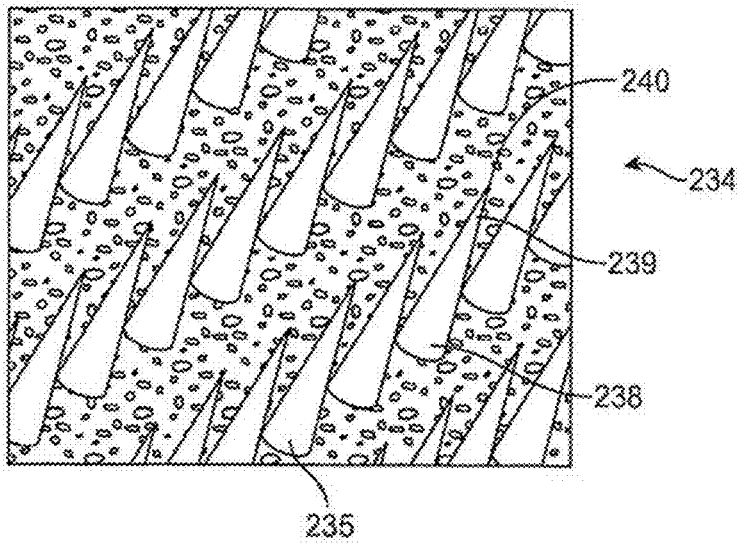


FIG. 18

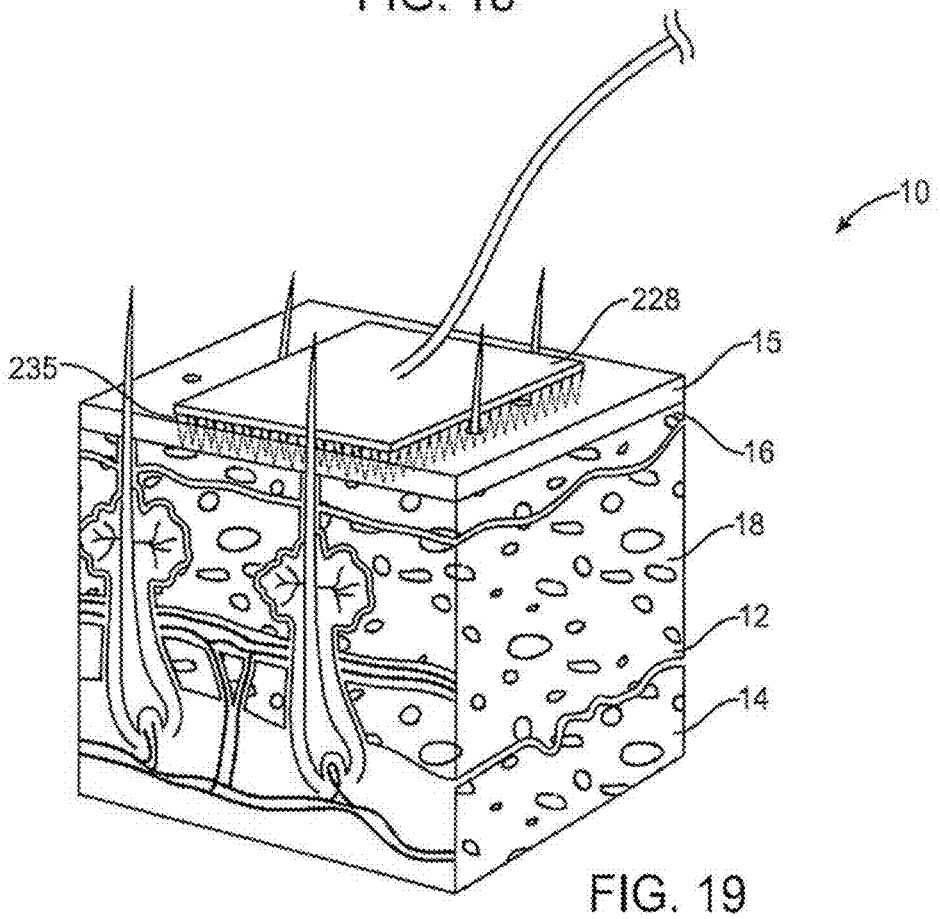


FIG. 19

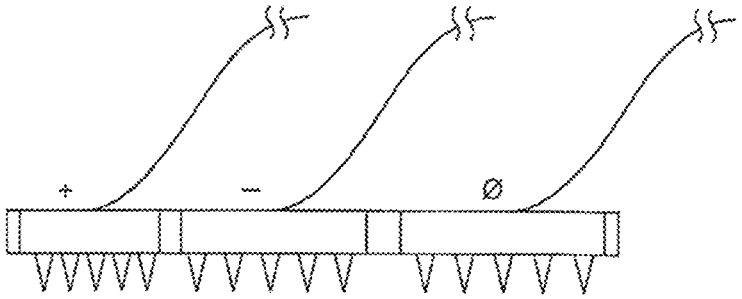


FIG. 20a

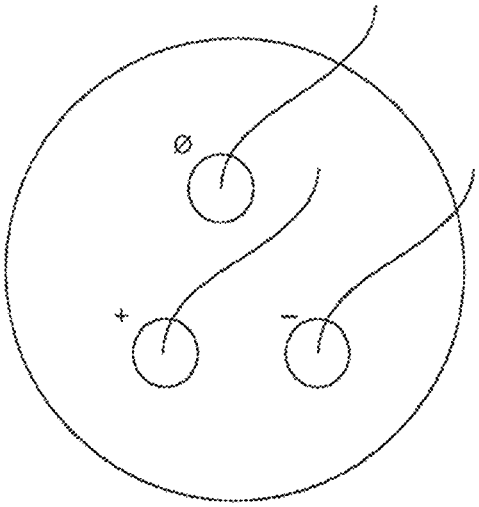


FIG. 20b

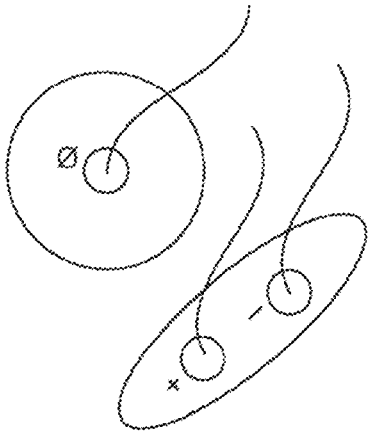


FIG. 20c

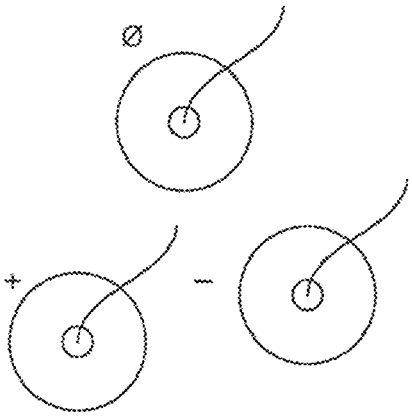


FIG. 20d

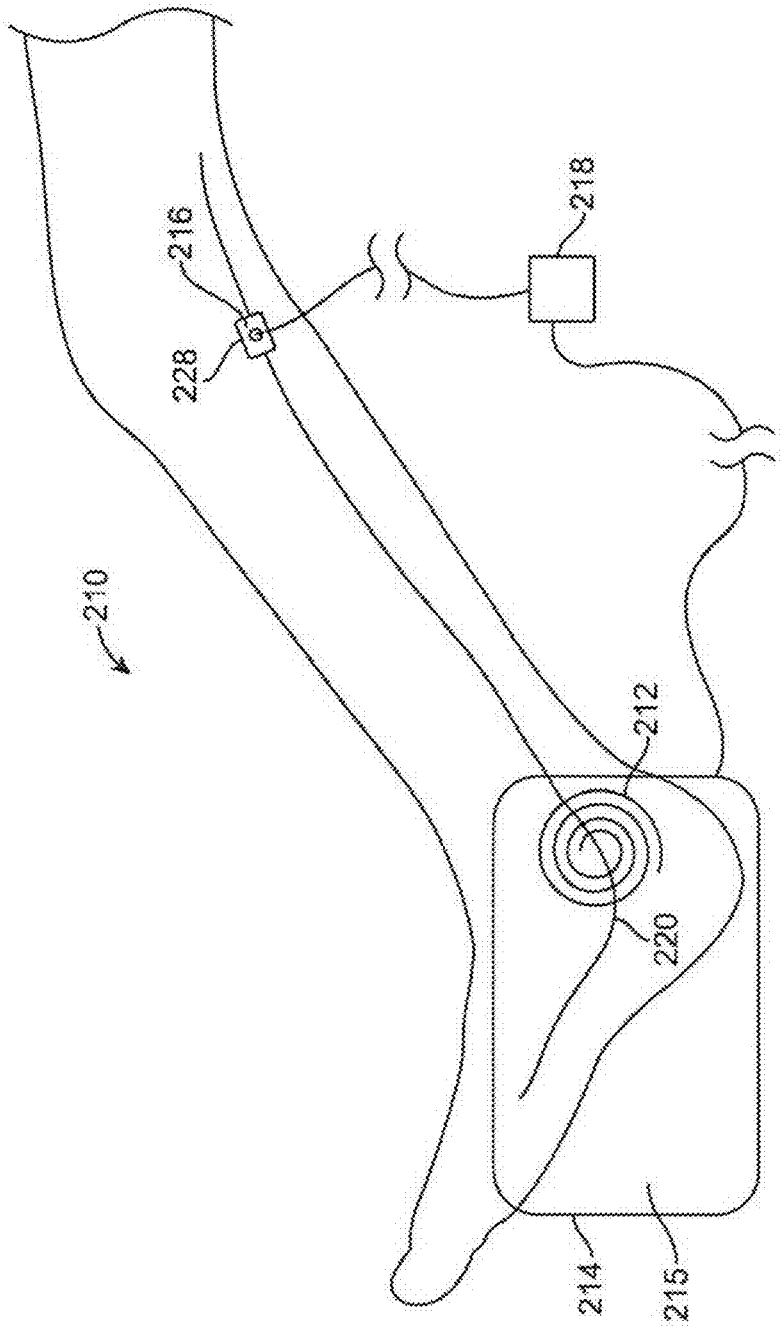


FIG. 21

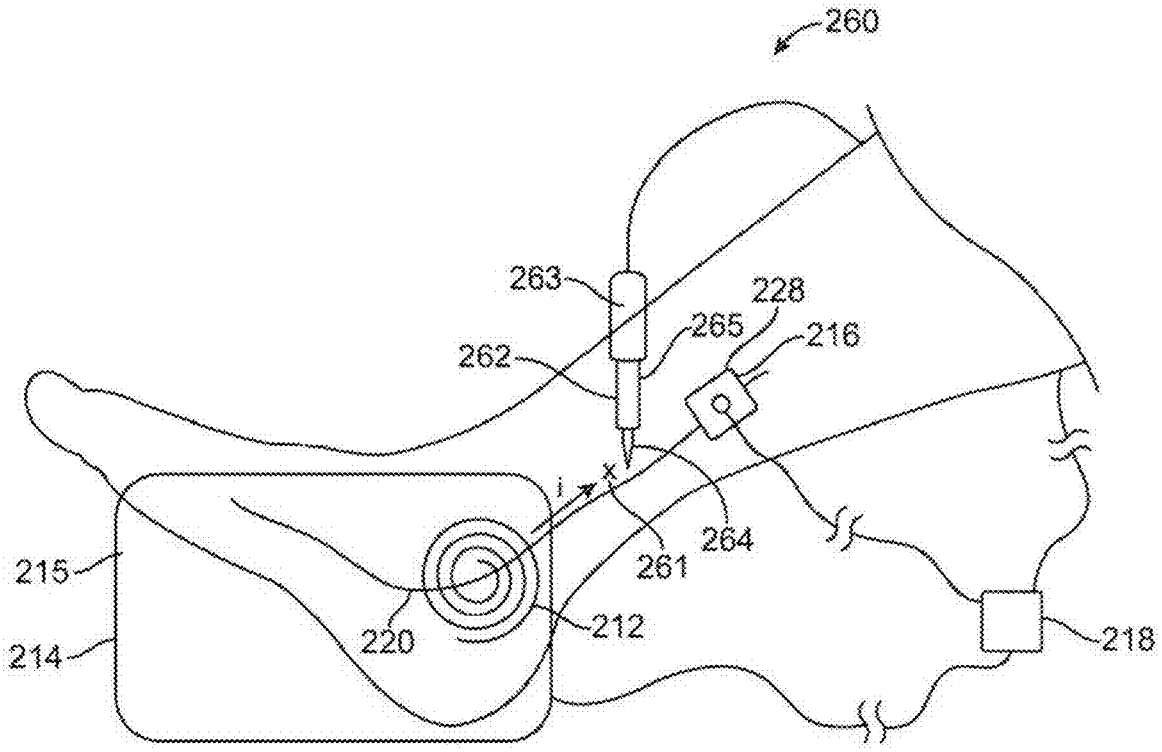


FIG. 22

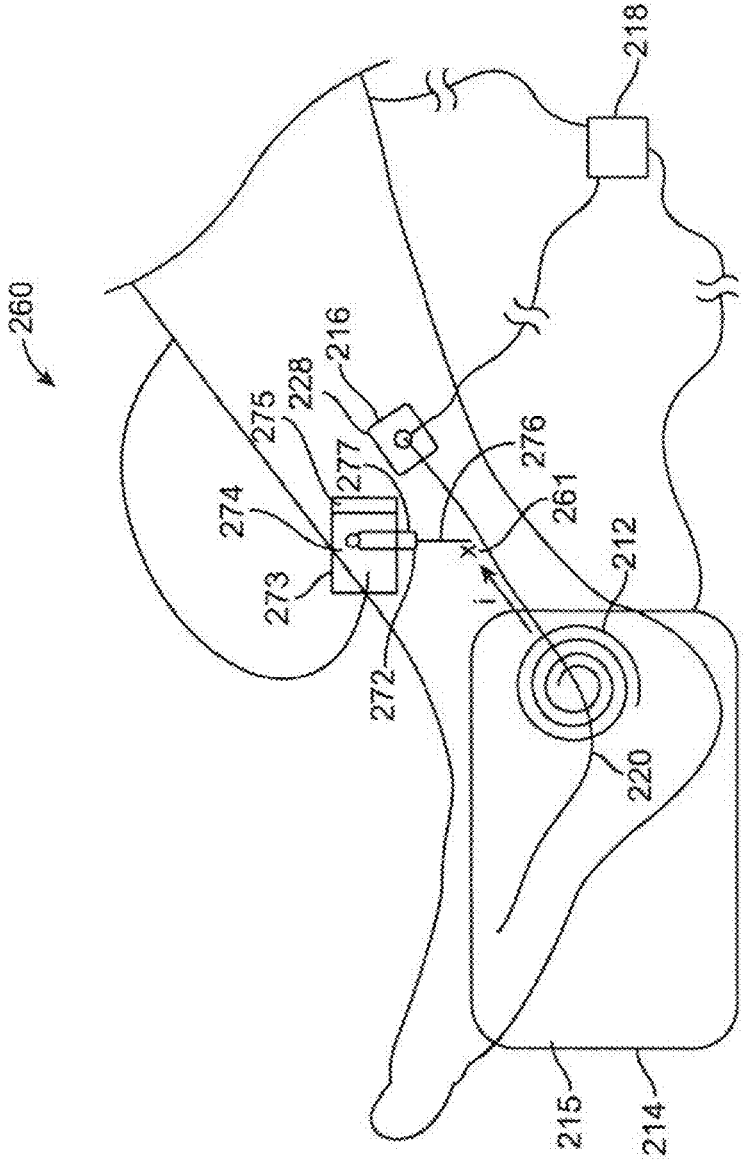


FIG. 23

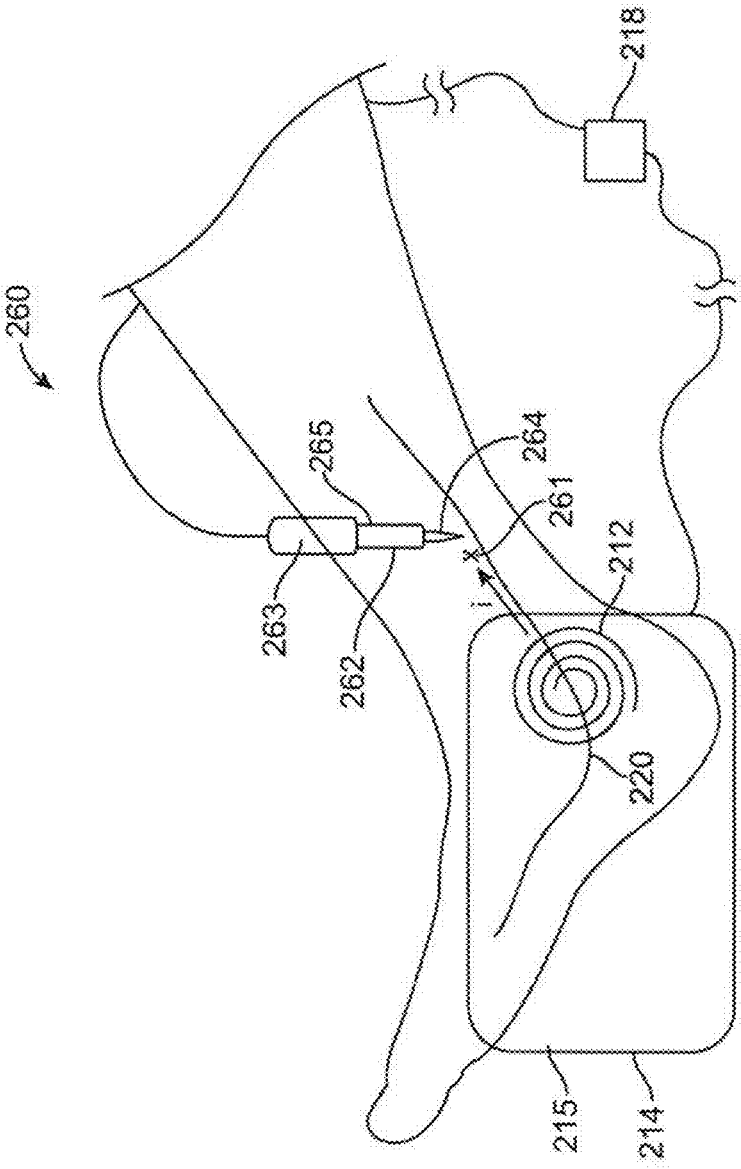


FIG. 24

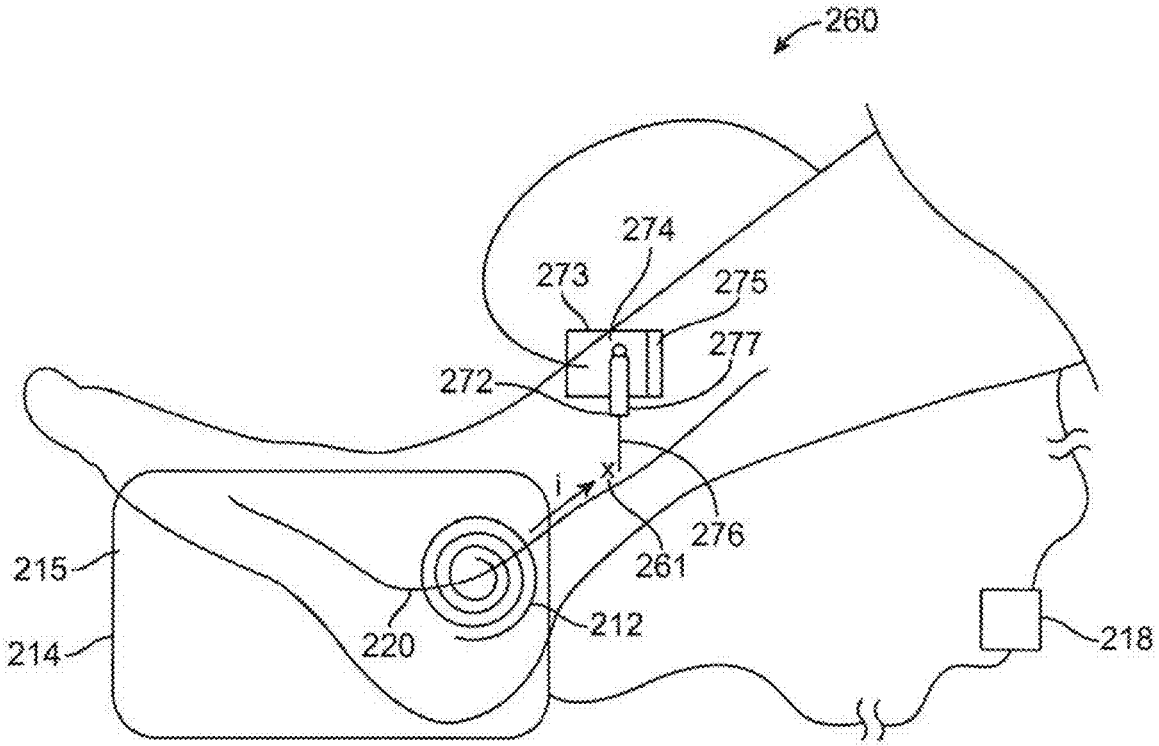


FIG. 25

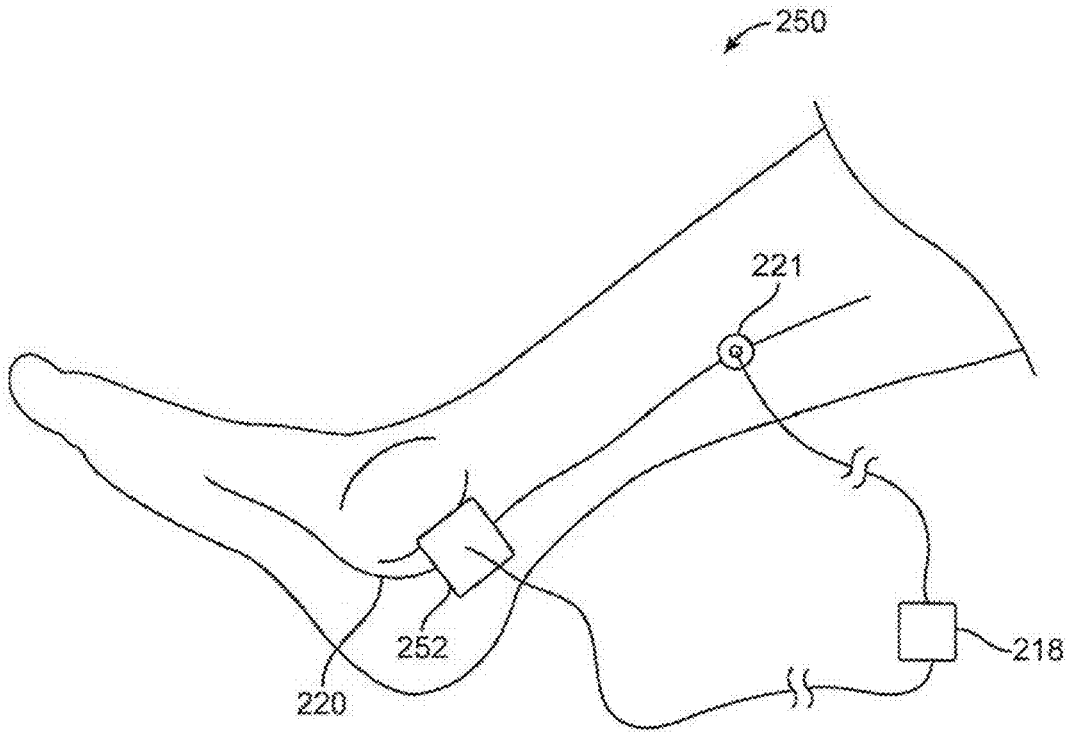


FIG. 26

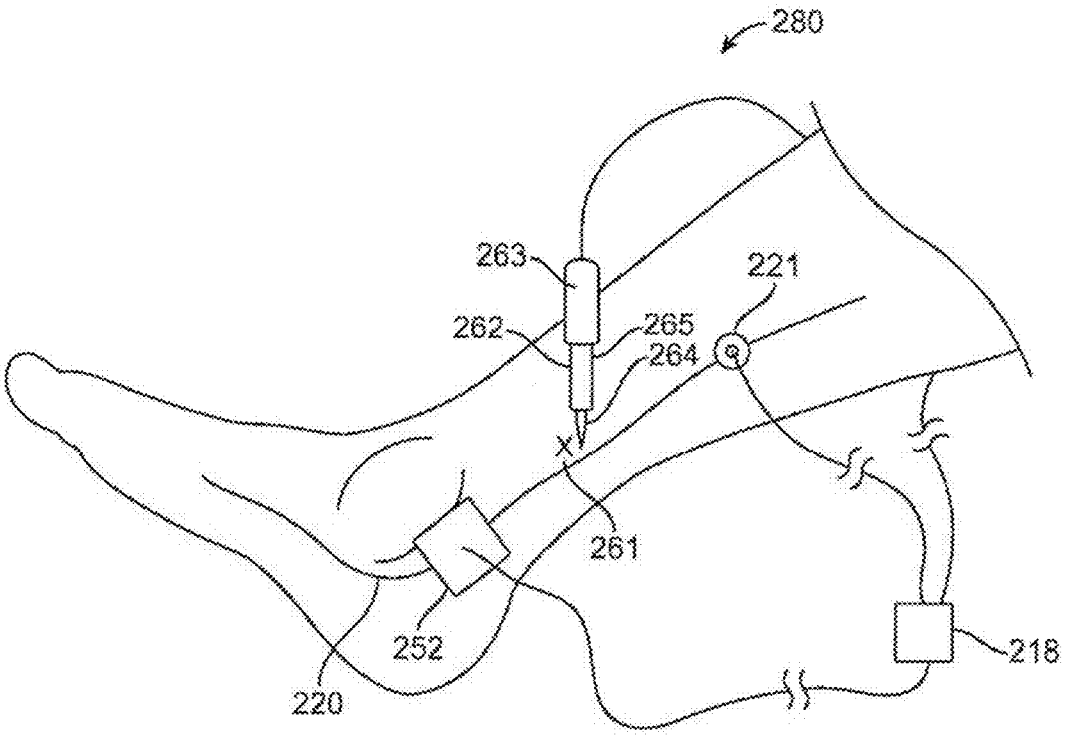


FIG. 27

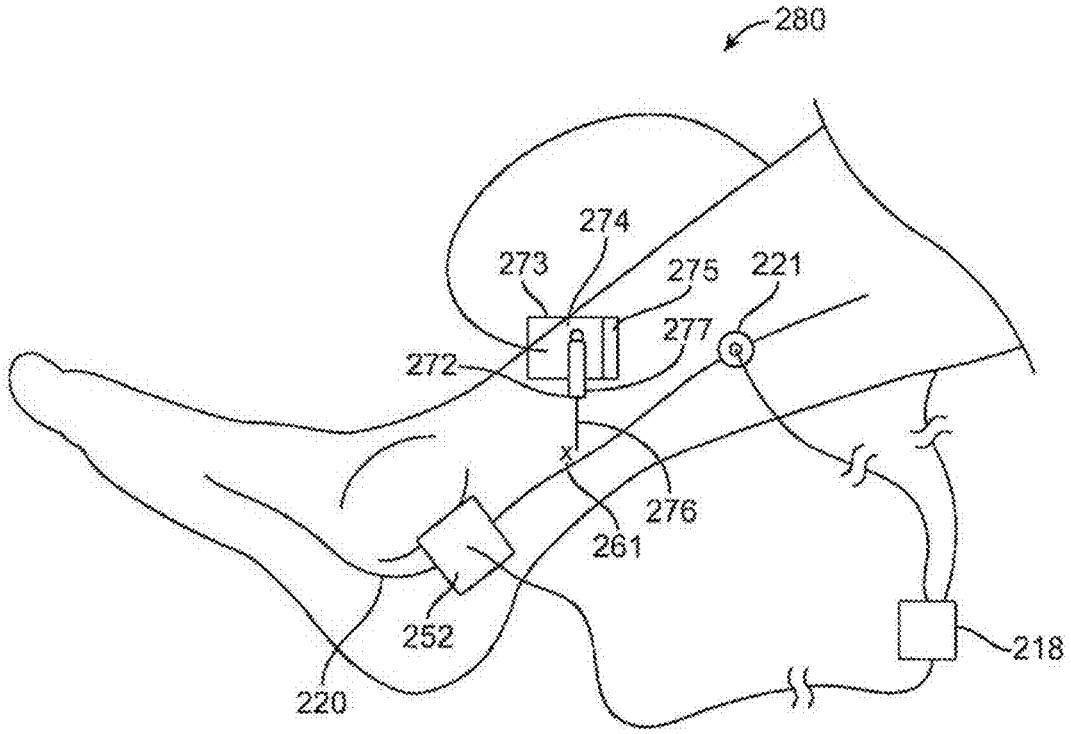


FIG. 28

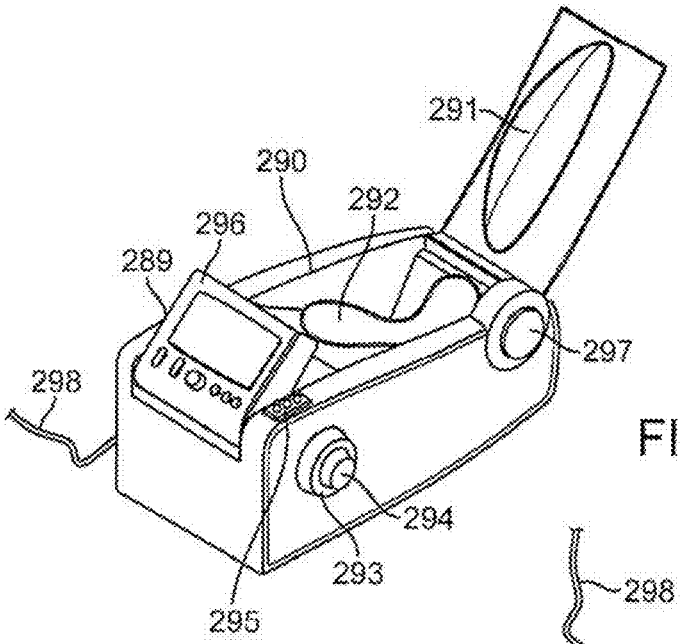


FIG. 29a

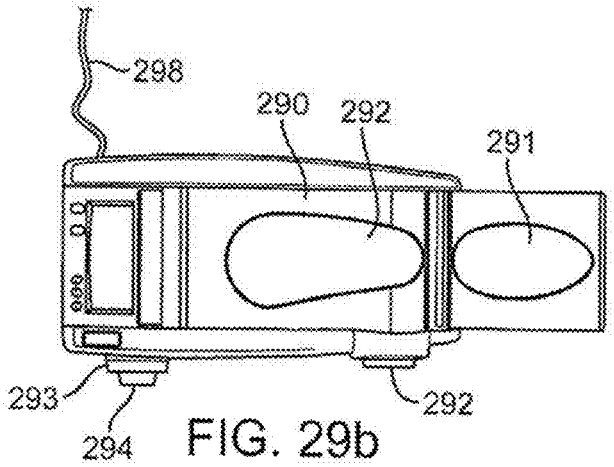


FIG. 29b

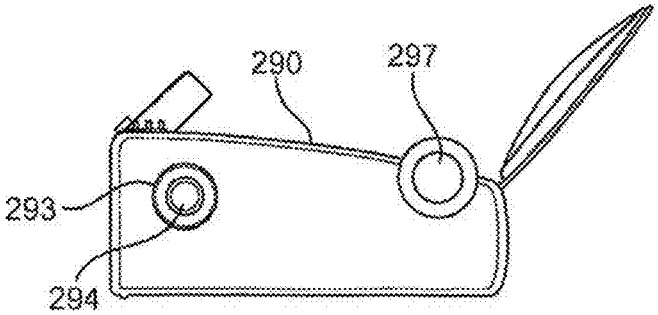


FIG. 29c

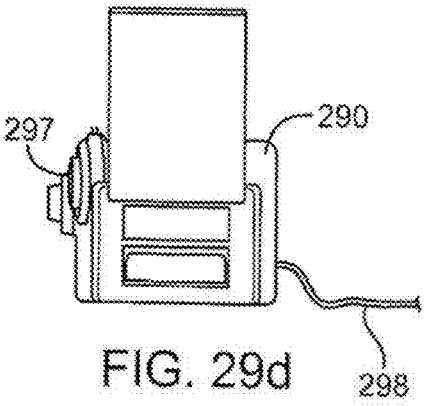


FIG. 29d

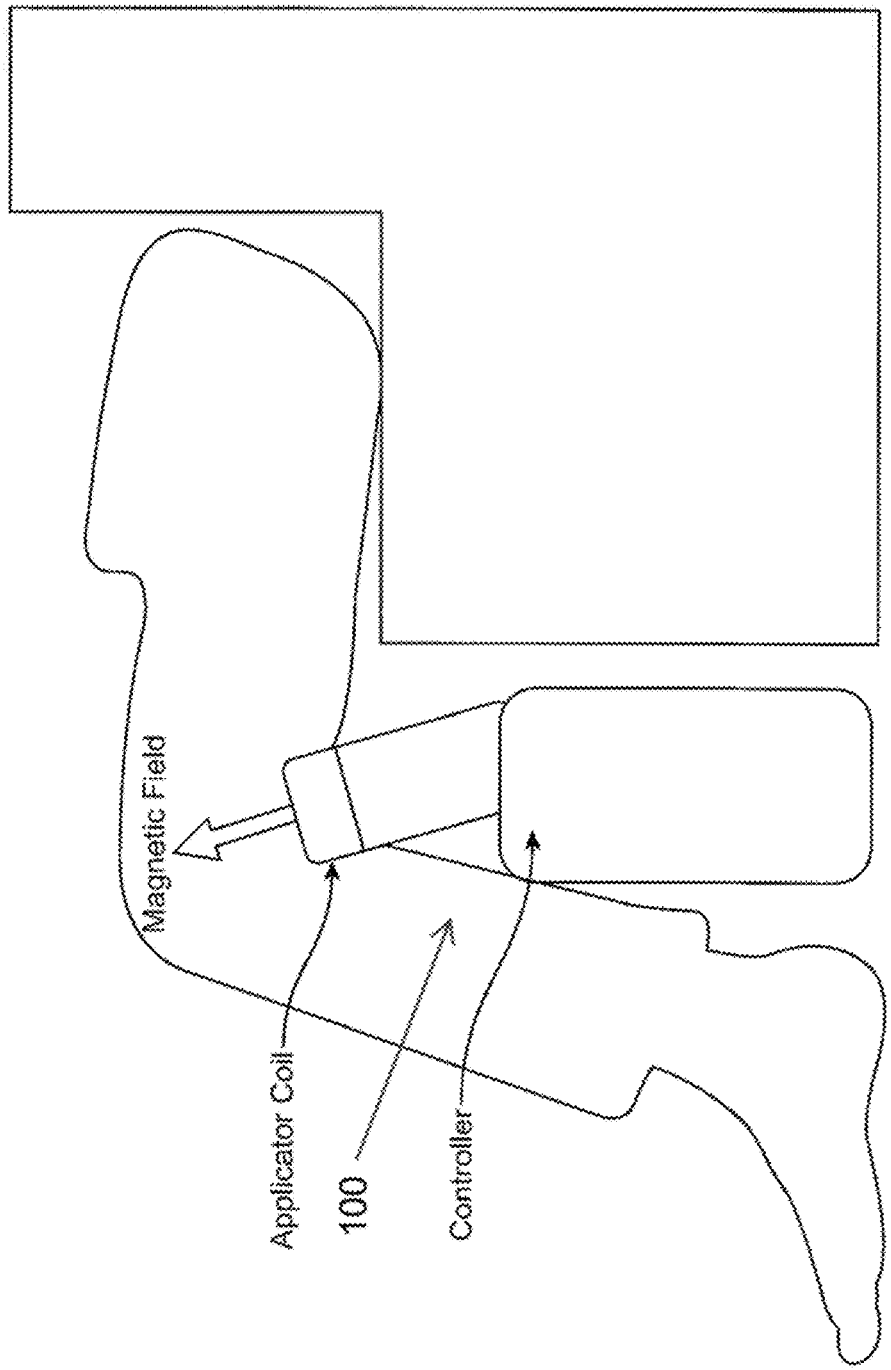


FIG. 30a

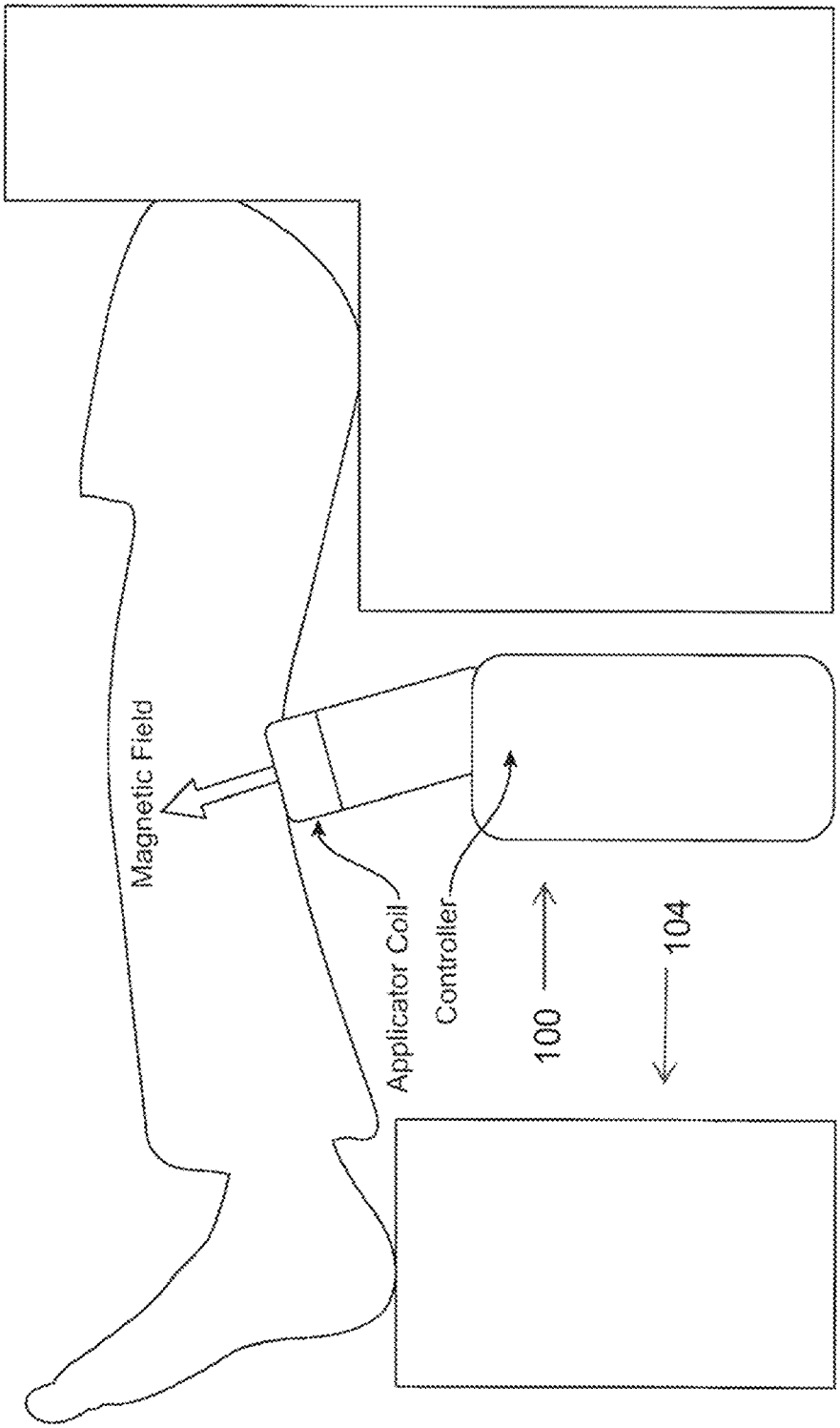


FIG. 30b

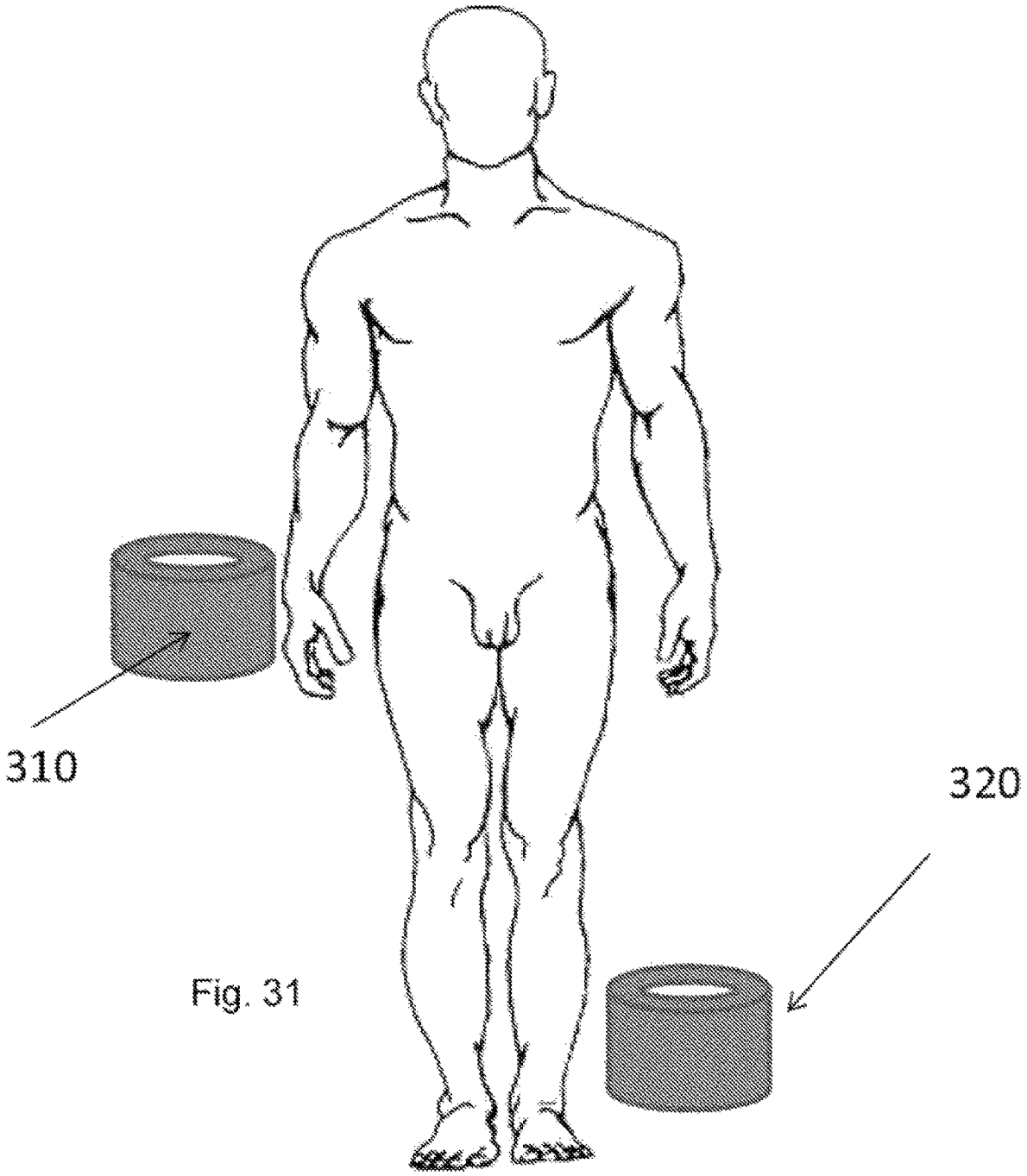


Fig. 31

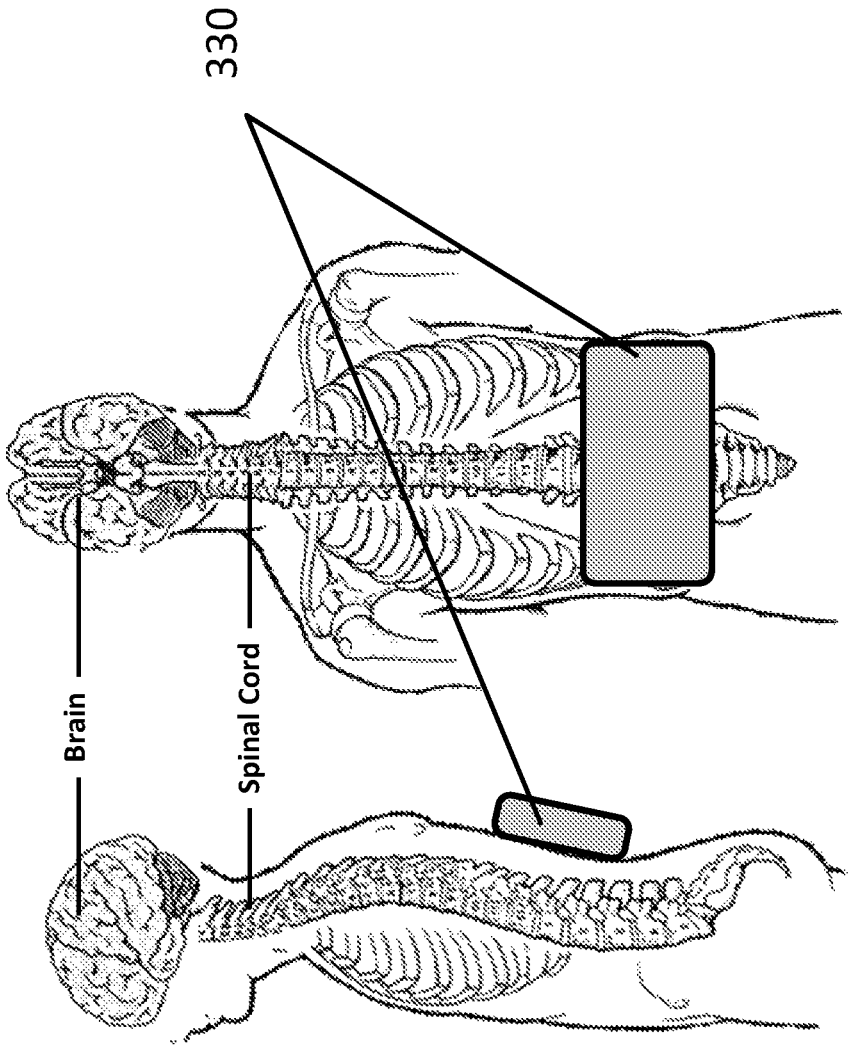


FIG. 32

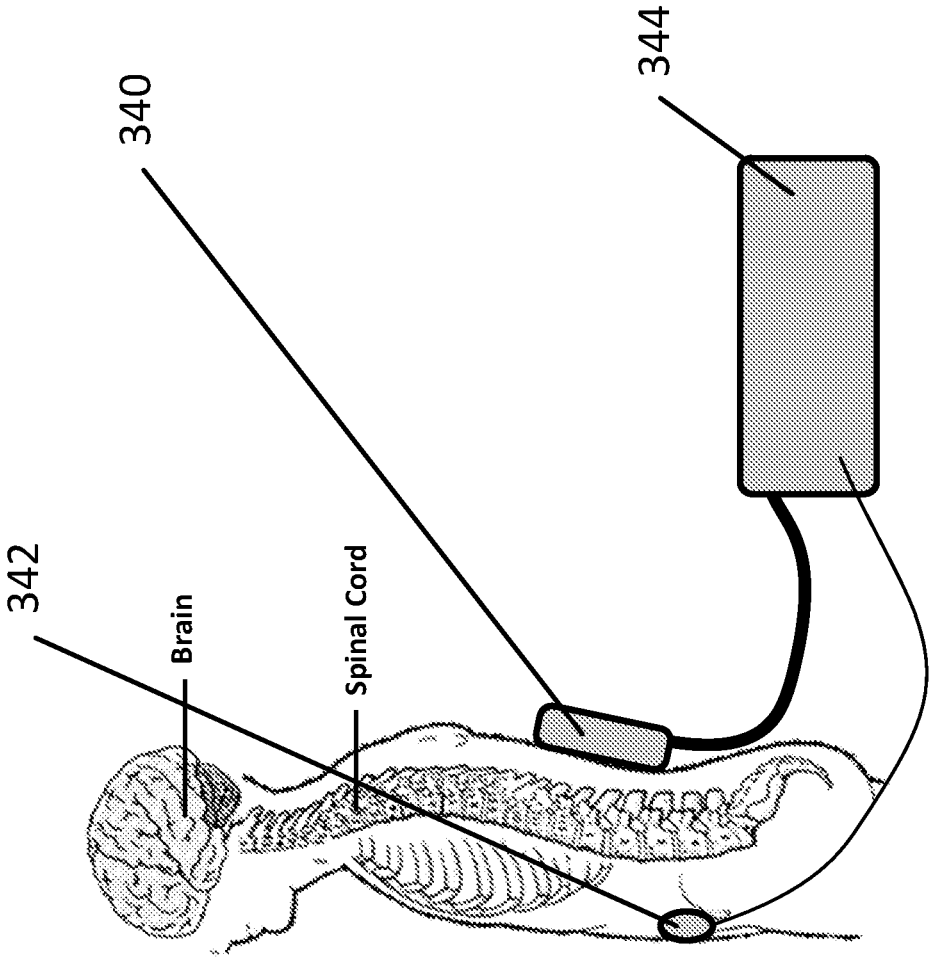


FIG. 33

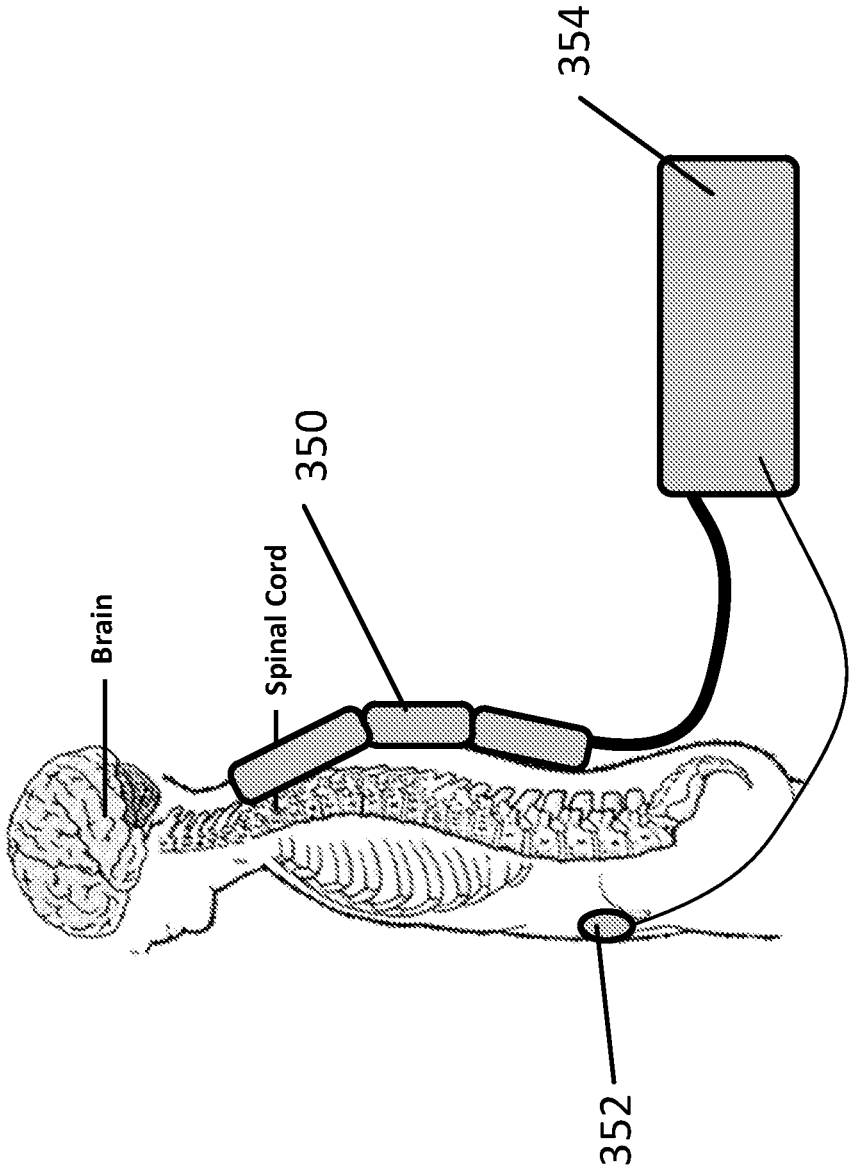


FIG. 34

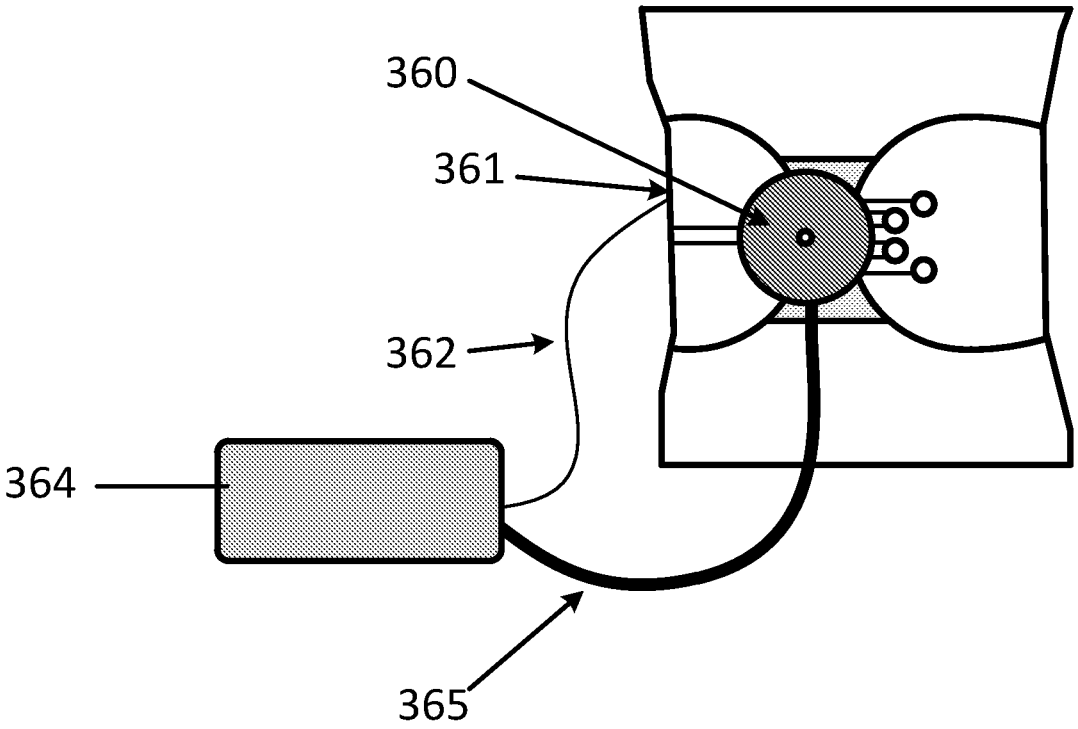


FIG. 35

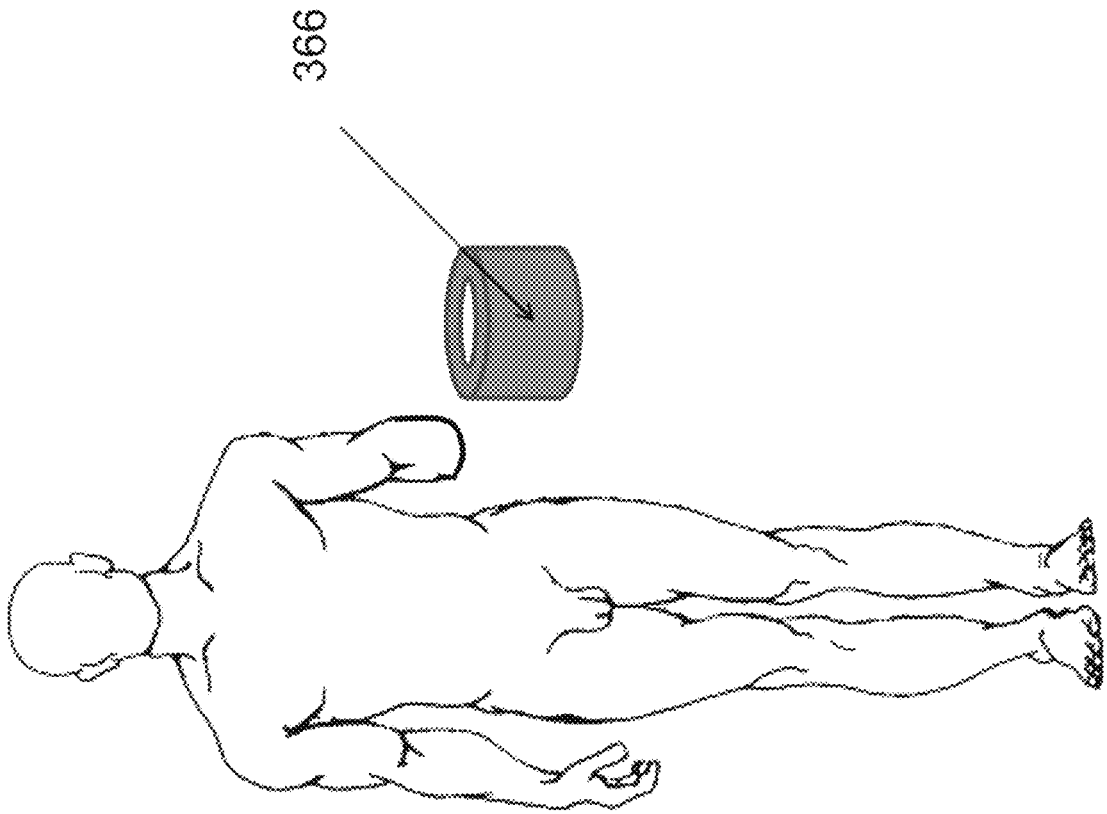


Fig. 36

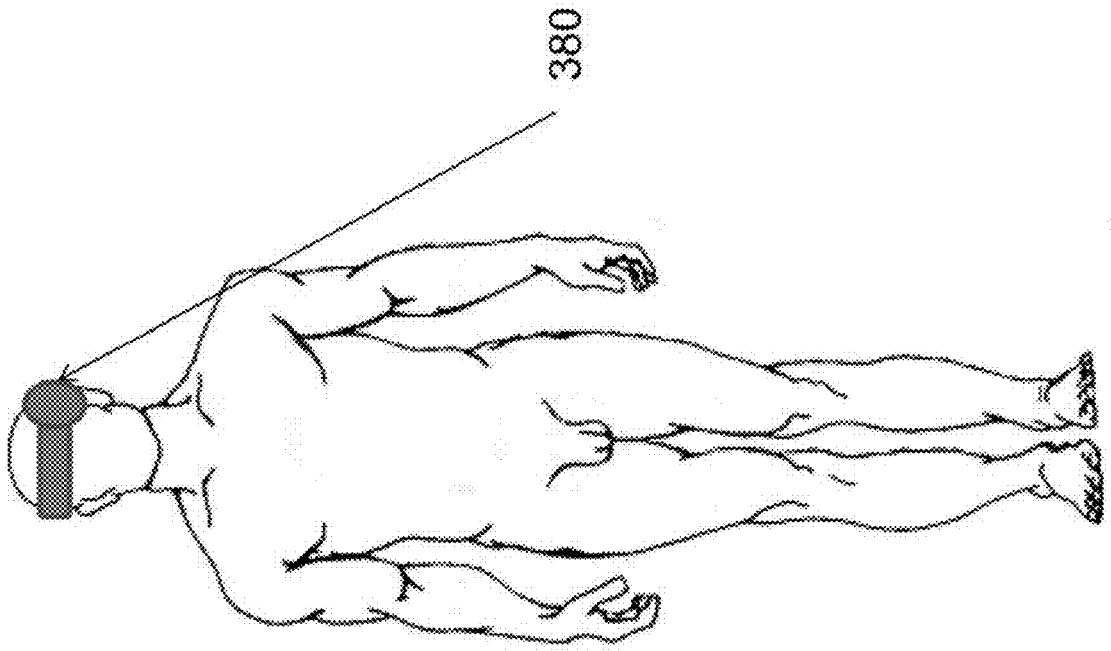


Fig. 37

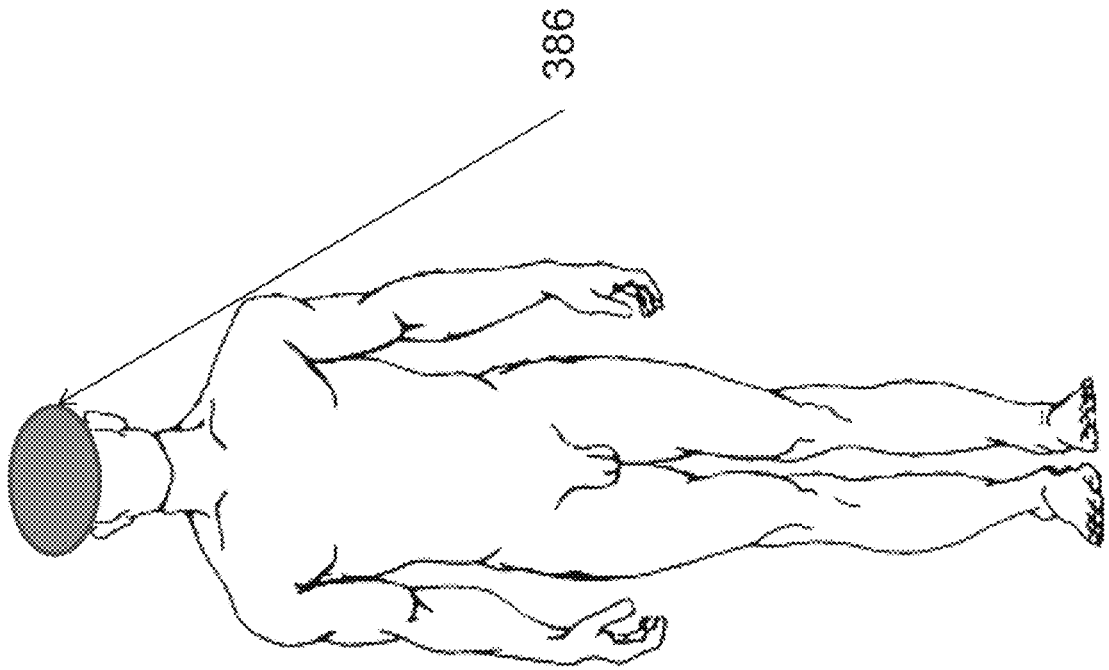


Fig. 38

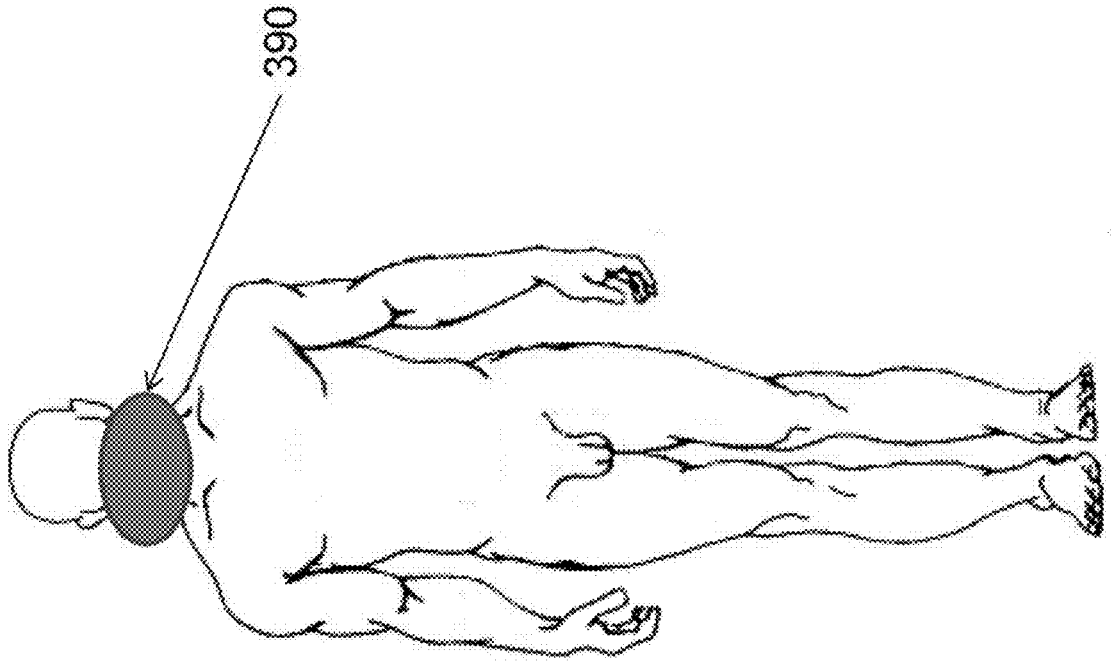


Fig. 39

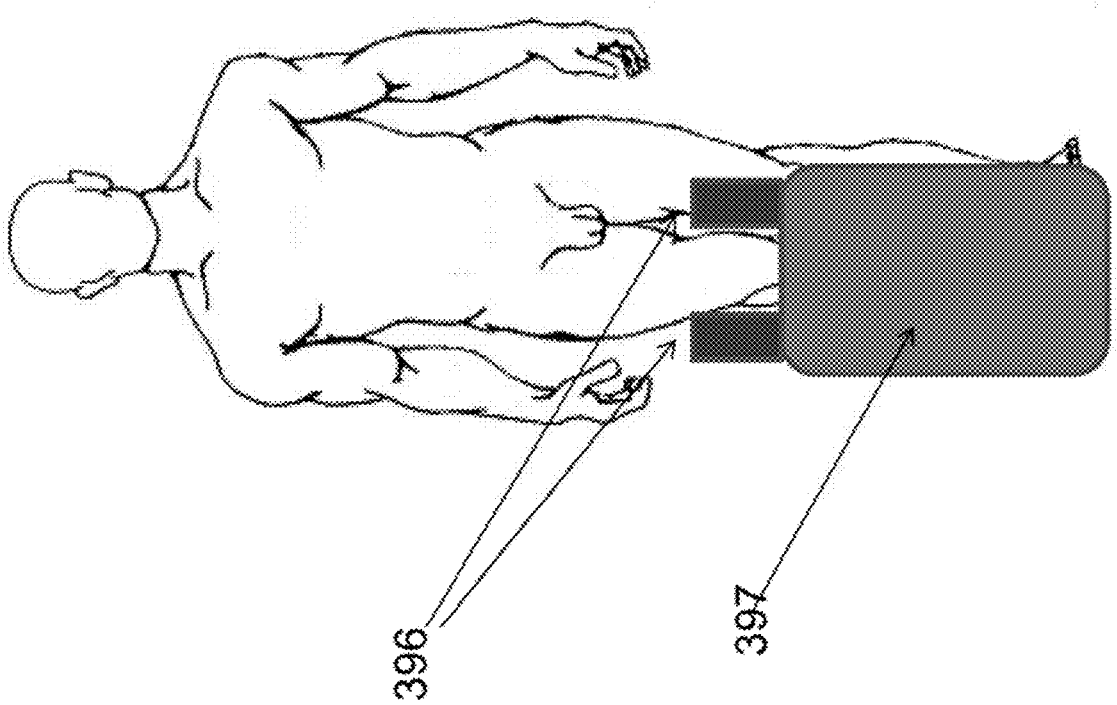


Fig. 40

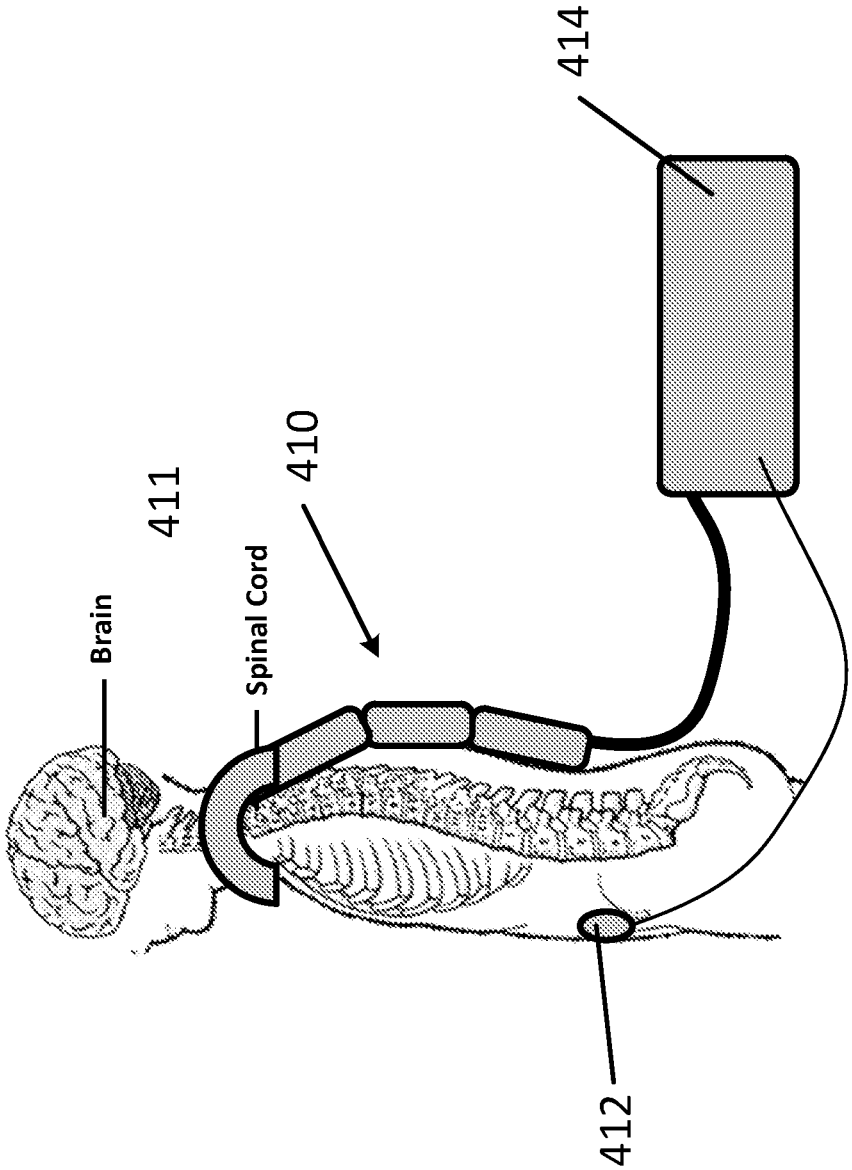


FIG. 41

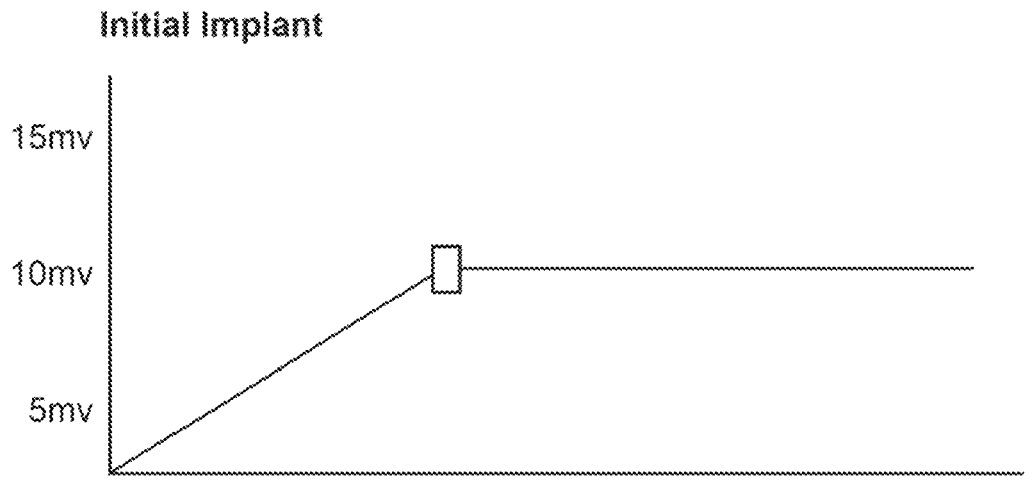


FIG. 42A

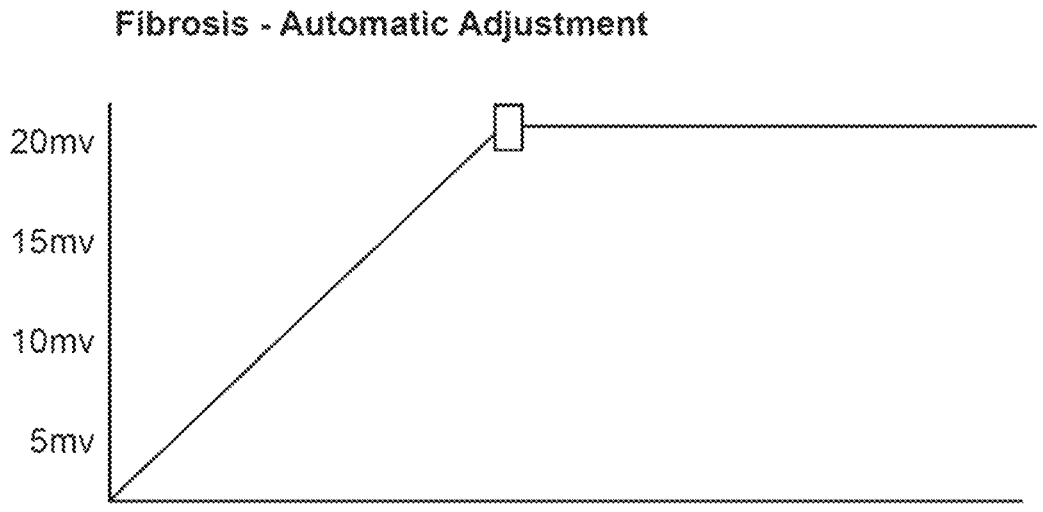


FIG. 42B

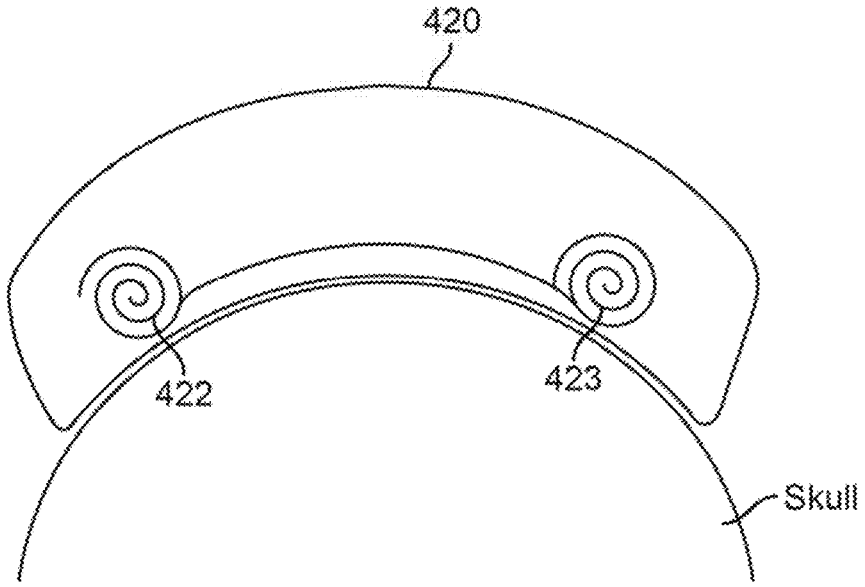


FIG. 43A

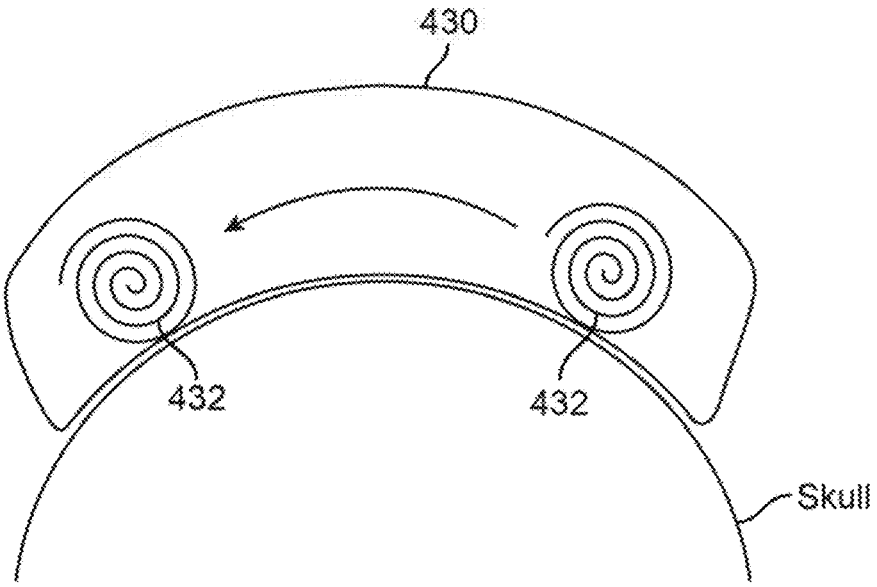


FIG. 43B

# METHODS AND DEVICES FOR PERFORMING ELECTRICAL STIMULATION TO TREAT VARIOUS CONDITIONS

## CROSS-REFERENCE TO RELATED APPLICATIONS

The present application is a continuation of U.S. patent application Ser. No. 15/056,910 filed Feb. 29, 2016, which is a continuation of U.S. patent application Ser. No. 14/676,635 filed Apr. 1, 2015 (now U.S. Pat. No. 9,387,338 issued Jul. 12, 2016), which is a continuation U.S. patent application Ser. No. 14/085,639 filed Nov. 20, 2013 (now U.S. Pat. No. 9,002,477 issued Apr. 7, 2015), which is a continuation of U.S. patent application Ser. No. 13/456,016 filed Apr. 25, 2012 (now Abandoned), which is a continuation of PCT International Patent Application Number PCT/US2010/054167, filed Oct. 26, 2010, which claims benefit of priority to U.S. Provisional Patent Application Ser. No. 61/279,883 filed Oct. 26, 2009. Each of the above referenced applications is incorporated herein by reference in their entirety. U.S. patent application Ser. No. 14/085,639 filed Nov. 20, 2013, is also a continuation-in part of U.S. patent application Ser. No. 12/508,529 filed Jul. 23, 2009 (now Abandoned), which is a continuation-in-part of U.S. patent application Ser. No. 11/866,329 filed Oct. 2, 2007 (now Abandoned), which claims priority to U.S. Provisional Patent Application Ser. No. 60/848,720 filed Oct. 2, 2006. Each of the above referenced applications is incorporated herein by reference in their entirety.

The following applications are also incorporated herein by reference in their entirety for all purposes; U.S. patent application Ser. No. 12/508,529 filed Jul. 23, 2009, which is a continuation in part of U.S. patent application Ser. No. 11/866,329 filed Oct. 2, 2007, which claims priority to U.S. Provisional Patent Application Ser. No. 60/848,720 tiled Oct. 2, 2006; U.S. patent application Ser. No. 12/695,087 filed Jan. 27, 2010, which is a continuation of U.S. patent application Ser. No. 11/332,797 filed Jan. 17, 2006; U.S. patent application Ser. No. 12/509,362 filed Jul. 24, 2009; Ser. No. 12/469,365 filed May 20, 2009 which is a continuation of U.S. patent application Ser. No. 11/866,329 filed Oct. 2, 2007 which claims priority to U.S. Provisional Patent Application Ser. No. 60/848,720 filed Oct. 2, 2006, and Ser. No. 12/469,625 filed May 20, 2009 which is a continuation of U.S. patent application Ser. No. 11/866,329 filed Oct. 2, 2007 which claims priority to U.S. Provisional Patent Application Ser. No. 60/848,720 filed Oct. 2, 2006; and Ser. No. 12/509,304 filed Jul. 24, 2009 which is a continuation of U.S. patent application Ser. No. 12/508,529 filed Jul. 23, 2009 which is a continuation-in-part of U.S. patent application Ser. No. 11/866,329 filed Oct. 2, 2007 which claims priority to U.S. Provisional Patent Application Ser. No. 60/848,720 filed Oct. 2, 2006 and Ser. No. 12/509,345 filed Jul. 24, 2009 which is a continuation of U.S. patent application Ser. No. 12/508,529 filed Jul. 23, 2009 which is a continuation-ire-part of U.S. patent application Ser. No. 11/866,329 filed Oct. 2, 2007 which claims priority to U.S. Provisional Patent Application Ser. No. 60/848,720 filed Oct. 2, 2006.

## BACKGROUND

The concept of pulsed electromagnetic stimulation (PES) was, first observed by the renowned scientist Michael Faraday in 1831, Faraday was able to demonstrate that time varying, or pulsed electromagnetic fields have the potential



to induce current in a conductive object. Faraday's experimental setup was simple. He found that by passing strong electric current through a coil of wire he was able to produce pulsed electromagnetic stimuli. This pulsed electromagnetic stimulus was able to induce the flow of current in a nearby electrically conductive body.

In the years since the discoveries of Faraday, pulsed electromagnetic stimulators have found application in countless areas of scientific investigation. In 1965, the scientists Bickford and Freming demonstrated the use of electromagnetic stimulation to induce conduction within nerves of the face. Later, in 1982 Poison et al., U.S. Pat. No. 5,766,124 produced a device capable of stimulating peripheral nerves of the body. This device was able to stimulate peripheral nerves of the body sufficiently to cause muscle activity, recording the first evoked potentials from electromagnetic stimulation.

One of the earliest practical applications of electromagnetic stimulating technology took the form of a bone growth stimulator—a device that employed low frequency pulsed electromagnetic fields (PEMF) to stimulate bone repair. They first found use approximately 20 years ago in the treatment of non healing fractures, and are slowly becoming the standard of care for this condition.

As investigators have studied the effects of electromagnetic fields on fracture healing, it has been demonstrated that PEMFs can not only facilitate fracture healing but also promote numerous other positive effects on the human body, including: (1) causing muscles to contract, (2) altering nerve signal transmission to decrease experienced pain, and (3) causing new cell growth in cartilage. These powerful effects of pulsed electromagnetic stimulation have been well established in laboratory studies of animal models and also in multiple large, double blind, placebo controlled studies of human subjects published in the medical literature.

Erickson's U.S. Pat. No. 5,181,902, Jan. 26, 1993, which describes a device using a double transducer system with contoured, flat wound transducers intended to generate therapeutic flux-aided electromagnetic fields in the body. The device is suggested to be conformed to the contour of the patient's back and incorporates an adjustable belt into the design. This system, as it is described, is disadvantageous in at least two respects. First, the flat, wound nature of the coil in this device is limited in its delivery of pulsed electromagnetic fields to deep tissues of the body. Second, the rigid nature of this device, intended to provide bracing for patients recovering from spinal fusion surgeries, may prove uncomfortable to some patients, especially in delivering therapy to regions of the body other than the back, such as the knee, elbow, hand, or other joints and tissues.

U.S. Pat. No. 6,086,525, which discloses a device that has a single coil in the shape of a "C" where the intensity of the electromagnetic field is between the ends of the "C". That point must be employed directly over the target nerve or muscle to be stimulated. The coil is toroidal in configuration and utilizes a unique core of vanadium permendur in the preferred form. One of the disadvantages of this device is that it requires a trained technician to treat the patient and to properly hand hold the open end of the "C" over the targeted nerve or muscle to be stimulated. The device is not portable and is designed for use in hospitals or similar institutions. Also the vanadium permendur core is required to increase the strength of the electromagnetic field to be strong enough to be effectively used. The design, shape and configuration described in Davey and other prior art devices, require the electromagnetic stimulator to be hand operated during use.

Tepper in U.S. Pat. No. 5,314,401, May 24, 1994 describes a pulsed electromagnetic field transducer that is intended to be conformable to the contour of a patients body. The PEMF transducer in this application is described as having a desired form and sufficient rigidity to maintain an anatomical contour. This system is disadvantageous in a number of respects. First, the desired contouring of this device will require that a significant number of different sizes be manufactured to accommodate the contours of an endless variety of body shapes. Second, the intended device does not incorporate markings to ensure that the device is placed in a correct alignment over the targeted area of the body. Finally, this proposed device utilizes flat, wound coils, providing PEMFs that do not penetrate as deeply or as uniformly into body tissues as those fields produced by solenoid coils.

In U.S. Pat. No. 6,179,770 B1, Jan. 30, 2001, Mould describes dual coil assemblies in a magnetic stimulator for neuro-muscular tissue, with cooling provided for the transducer coil. This device is intended to be held by a trained user over the targeted regions of the body in order to deliver PEMF therapy. The design of this device is limited by the difficult nature of manipulating a single coil and the cost-intensive requirement of using highly skilled medical personnel for operation.

Parker in U.S. Pat. No. 6,155,966, Dec. 5, 2000 describes a wearable article with a permanent magnet/electromagnet combination device to be used for toning tissue with focused, coherent EMF. This device is disadvantageous in several respects. First, this device is intended to be a hand-held application, with the user applying the device to targeted areas of the body. The hand-held nature of this application creates an inherently inconsistent and non-uniform method for delivery, especially difficult with the intention of the device to provide a focused electromagnetic stimulus. Second, the device combines a static magnet with the electromagnet assembly in an attempt to create a unipolar, negative polarity field. This form of electromagnetic field stimulation has not been demonstrated to be effective in the treatment of osteoarthritis, musculoskeletal pain, or atrophy treatment.

Mar.'s U.S. Pat. No. 6,200,259 B1, Mar. 13, 2001 describes a device with electromagnetic field coils applied front and back to a patient for treating cardiovascular disease by angiogenesis. An EMF dosage plan contemplates, multiple coil implants and pulse variables including carrier frequency, pulse shape, duty cycle, and total time exposed. This device describes the placement of coils around the regions of tissues in which collateralization of blood flow (or angiogenesis) is desired. The design contemplates applications including the use of coils embedded in a cloth wrap, which could be worn as a garment surrounding the body area of interest. Alternatively, an applicator with embedded coils to be placed around an arm or a leg to deliver the desired field is described. The use of PEMF in this application for the purpose of modulation of angiogenesis shows significant promise. The description of this device, however, does not suggest any extension of the electromagnetic phenomenon in circumstances where PEMF stimulation can provide dramatic opportunities for the treatment of osteoarthritis, and musculoskeletal pains including tendonitis, bursitis, and muscle spasms. Furthermore, this device is disadvantageous in the fact that it does not provide for the use of solenoid-type coils for the delivery of PEMF.

Poison's U.S. Pat. No. 5,766,124, Jun. 16, 1998 describes a magnetic stimulator of neuro-muscular tissue. A reserve capacitor providing more efficiency in the control circuitry is devised. The description of the device, however, describes the stimulating coil in broad, generic terms, and does not contemplate application of the coil in any type of body applicator or other specific method for delivering PEMF to targeted areas of the body. As a result, this device is disadvantageous, in the respect that is does not provide for any method or delivery system to provide consistent, uniform PEMF stimulation.

Schweighofer's U.S. Pat. No. 6,123,658, Sept. 26, 2000 describes a magnetic stimulation device which consists of a stimulation coil, a high-voltage capacitor, and a controllable network part. This device is intended to differentiate itself from low-voltage, low current devices by using a specific high-voltage, high current design to deliver PEMF for the purpose of triggering action potentials in deep neuromuscular tissue. This coil in this device is described as having a difficult and expensive to use hand-held configuration.

Lin in U.S. Pat. No. 5,857,957, issued Jan. 12, 1999 teaches the use of functional magnetic stimulation for the purpose of inducing a cough function in a mammalian subject. The description of the device provides for the use of hand-held stimulation coil, intended to be placed over the anterior chest of the subject for the purpose of stimulating nerves to induce a cough. This system is disadvantageous in the requirement of hand-held delivery which is difficult and inconsistent. The description contemplates use of the device in the induction of cough, and does not contemplate extension of the use of the device into other areas of neuromuscular stimulation.

Tepper in U.S. Pat. No. 6,024,691, issued Feb. 15, 2000 describes a cervical collar with integral transducer for PEMF treatment file description of this device provides for the use of a single coil transducer, formed into the shape of a cervical collar. This system is disadvantageous in several respects. First, this device does not provide for the use of solenoid-type coils in the delivery of PEMF, which can provide a uniform and consistent signal. Second, the semi-rigid design of the collar complicates the delivery of PEMF to persons of differing body sizes. That is, for a person with a larger than average (or smaller than average) size neck, the design and semi-rigid nature of the device would make an exacting fit difficult, thereby diminishing the effectiveness of any delivered therapy. Furthermore, this device is designed to immobilize the neck and is therefore not applicable to most patients. Lastly, the device must be lowered over the head making application difficult.

Erickson in U.S. Pat. No. 5,401,233, issued Mar. 28, 1995 describes a neck collar device for the delivery of PEMF therapy. The description of this device provides for the use of semi-rigid transducers, intended to be conformable to a selected anatomical contour. This device in disadvantageous in respects similar to those of Pollack U.S. Pat. No. 5,401, 233, in that the device does not provide for the use of solenoid-type coils. Furthermore, this device is intended to provide bracing (as might be necessary for the treatment of fractures or after surgery). As a result, the rigidity of the device necessary to serve the bracing, function makes the device less comfortable to wear, especially for a person who would not require bracing (such as in the treatment of arthritis, muscle spasm, or other forms of musculoskeletal pain).

Kolt in U.S. Pat. No. 5,518,495, issued May 21, 1996 describes a coil wound on a large bobbin that permits the insertion of an arm or a leg into the field of the coil for PEMF type therapy. This device is disadvantageous in several respects. First, the described use of a bobbin, around which the wire for the stimulating coil is wound provides for

the treatment of certain areas of the body, but is certainly limited in its ability to deliver therapy to areas of the body such as the hips, shoulder, back, neck, etc. That is, the constraints of our human anatomy make it nearly impossible to approximate a metal bobbin, and thus the stimulating coil, to regions of the body such as the ball and socket joints of the hip or shoulder, where the round metal bobbin would strike the torso before it allowed the stimulating coils to adequately blanket with therapy the arm and/or joint in the hip and shoulder. Similarly, the use of a metal bobbin for the delivery of PEMF stimulation to the back would necessitate a large, cumbersome delivery system (into which the entire body would have to fit) in order to adequately deliver stimulation to targeted areas on the back or torso. Second, the device is described as a rigid bobbin through which the extremity is placed. This format makes application more difficult in that the applicator cannot be worn and therefore does not provide for consistent ideal placement of the extremity to maximize field effects. In fact, most designs of a similar nature are clinic-based devices and, therefore, would not be amenable to home healthcare applications as with the current invention. Third, the device described magnetic field within the bobbin is intended to have a maximum magnetic flux density in the range of 4.5 to 6 gauss. Studies (such as Trock et al in the Journal of Rheumatology 1994; 21(10): 1903-1911) have shown that PEMF stimulation in the range of 15-25 or more gauss are effective in the treatment of osteoarthritis or other musculoskeletal pain conditions.

Pollack in U.S. Pat. No. 5,014,699, issued May 14, 1991 describes a coil wound around the cast on an appendage for the delivery of PEMF treatment to fractured bone. The described device has shown promise for the treatment of fractured bone, especially nonunion or delayed healing fractures. However, the description of the device does not provide for extension of this application to the treatment of other conditions, such as arthritis, musculoskeletal pain, or atrophy.

Imran in US Pat App No 2006/0052839 filed Sept. 7, 2005 describe the use of an implantable stimulator for the treatment of chronic back pain. While this modality may be effective at treating hack pain, it requires a major surgery and will eventually suffer from habituation as the area around the needle fibroses and the nerve becomes deadened to repeated stimulation.

## SUMMARY

In certain variations, systems for electromagnetic induction therapy may include one or more conductive coils disposed within or along an applicator. The coils may be configured to generate a magnetic field focused on a target nerve, muscle or other body tissues in proximity to the coil. One or more sensors may be utilized to detect electrical conduction in the target nerve, to detect a muscular response caused by an electrical conduction in the target nerve, or to detect stimulation of a nerve, muscle or other body tissues and to provide feedback about the efficacy of the applied electromagnetic induction therapy. A controller in communication with the sensor may be adjustable to vary a current through the at least one coil so as to adjust the magnetic field focused upon the target nerve, muscle or other body tissues. Optionally, a user or patient may detect stimulation of a nerve, muscle or body tissue and the therapy may be adjusted based on feedback from the user or patient.

In certain variations, the applicator may be configured to intermittently apply or deliver pulsed magnetic fields to a target nerve, muscle or tissue without causing habituation of the target nerve, muscle or tissue.

In certain variations, methods of electromagnetic induction therapy may include one or more of the following steps. A first portion of a patient's body may be positioned relative to or in proximity to an applicator or an applicator may be positioned relative to or in proximity to a first portion of a patient's body, such that a target nerve, muscle or tissue within the first portion of the body is in proximity to one or more conductive coils disposed within or along the applicator. A current may be passed through a coil to generate a magnetic field focused on the target nerve, muscle or tissue. An electrical conduction through the target nerve, a muscular response caused by an electrical conduction through the target nerve or stimulation of a nerve, muscle, or body tissue may be detected by a sensor positioned along a second portion of the body. A signal from the sensor indicative of the electrical conduction or stimulation may be received, which provides feedback about the efficacy of the applied electromagnetic induction therapy. The current may be adjusted by a controller in communication with the conductive coils based on the feedback.

Optionally, a user may detect stimulation of a nerve, muscle or body tissue and the therapy may be adjusted based on feedback from the user. In certain variations, pulsed magnetic fields may be intermittently applied or delivered a target nerve, muscle or tissue without causing habituation of the target nerve, muscle or tissue. Such intermittent magnetic fields may be used to treat chronic conditions, e.g., chronic pain without causing habituation.

In certain variations, applicators may be ergonomic or may be designed or configured to accommodate, approximate or be positioned relative to or in proximity to specific regions of the body or anatomy. The specific, regions of the body or anatomy may be positioned relative to the applicators, or the applicators may be positioned relative to the specific regions of the body or anatomy to treat various conditions, for example, osteoarthritis, arthritis, back or neck pain, atrophy or paralysis, chronic pain, phantom or neuropathic pain, neuralgia, migraines, orthopedic conditions.

Other features and advantages will appear hereinafter. The features and elements described herein can be used separately or together, or in various combinations of one or more of them.

## BRIEF DESCRIPTION OF THE DRAWINGS

The drawings constitute a part of this specification and include exemplary embodiments of the invention, which may be embodied in various forms. It is to be understood that in some instances various aspects of the embodiments ma be shown exaggerated or enlarged to facilitate an understanding of the embodiments.

FIG. **1** is a schematic view of an apparatus for magnetic induction therapy according to a first variation.

FIG. **2** is a schematic view of an apparatus for magnetic induction therapy according to a second variation.

FIG. **3** is a schematic view of an apparatus for magnetic induction therapy according to a third variation.

FIG. **4** is a schematic view of an apparatus for magnetic induction therapy according to a fourth variation.

FIG. **5** is a schematic view of an apparatus for magnetic induction therapy according to a fifth variation.

FIGS. **6**A-**6**D are schematic illustrations depicting a first method of use of an apparatus for magnetic induction

therapy. This method is based on adjusting the position of the conductive coils so to optimize a magnetic flow applied to a target nerve.

FIGS. **7**A-**7**D are schematic illustrations of a second method of use of an apparatus for magnetic induction therapy. This method is based on locking the conductive coils in position once electrical conduction in a target nerve has been detected.

FIG. **8** is a schematic view of a variation that includes a plurality of sensors.

FIGS. **9**A-**9**D are schematic representations of different garments adapted to operate as apparatus for magnetic induction therapy.

FIG. **10** is a schematic view of an apparatus for providing electrical stimulation.

FIG. **11** is a schematic view of another variation of an apparatus for providing electrical stimulation.

FIG. **12** shows a schematic view of an energy emitting system including a microneedle patch sensor.

FIG. **13**-**15** shows magnified bottom views of variations of microneedle patches.

FIGS. **16**-**17** shows magnified side views of variations of a microneedle patch.

FIG. **18** shows a magnified bottom perspective view of a microneedle patch.

FIG. **19** shows a representative cross sectional view of the skin composed of an outer stratum corneum covering the epidermal and dermal layers of skin and the underlying subcutaneous tissue, with a variation of a microneedle patch attached thereto.

FIG. **20***a* shows a magnified side view of a variation of a microneedle patch including multiple electrodes.

FIG. **20***b*-**20**D show variations of a microneedle patches including multiple electrodes.

FIG. **21** shows a schematic view of an energy emitting system including a microneedle patch sensor placed behind a subject's knee.

FIGS. **22**-**23** show schematic views of energy emitting systems including an electrode needle and sensor.

FIGS. **24**-**25** show schematic views of energy, emitting systems including an electrode needle without a sensor.

FIG. **26** shows a schematic view of an energy emitting system including a microneedle patch for providing stimulation.

FIGS. **27**-**28** show schematic views of energy emitting systems including an electrode needle and microneedle patch for providing stimulation.

FIG. **29***a*-**29***d* show a prospective, side, top and rear views of an e emitting device in the form of a foot cradle.

FIGS. **30**A-**30**B show schematic views of an energy emitting device in the form of a knee support.

FIG. **31** show a schematic view of a variation of an arm applicator and a foot, knee or leg applicator.

FIG. **32** shows a schematic view of a variation of a back applicator.

FIG. **33** shows a schematic view of a variation of a system including a back applicator, a sensor and logic controller.

FIG. **34** shows a schematic view of system including multiple back applicators, a sensor and logic controller.

FIG. **35** shows a schematic view of a variation of a system including a back applicator held on a patient's body by an ergonomic positioning element in the form of a belt and a logic controller.

FIG. **36** shows a schematic view of a variation of an applicator designed to stimulate a nerve responsible for phantom or neuropathic pain.

FIG. **37** shows a schematic view of a variation of a facial neuralgia applicator.

FIG. **38** shows a schematic view of a variation of an applicator which may be placed over the occipital nerve for the treatment of migraines.

FIG. **39** shows a schematic view of a variation of an applicator which may be placed over the frontal cortex for the treatment of depression.

FIG. **40** shows a schematic view of a variation an applicator in the form of a stimulatory coil platform for positioning one or more coils in proximity to a knee or popliteal nerve.

FIG. **41** shows a schematic view of a system including a variation of a back applicator held on a patient's body by an ergonomic positioning element in the form of a shoulder harness, a sensor, and a logic controller.

FIGS. **42**A and **42**B show an example of how the amount of stimulatory power required to achieve a desired stimulus may be automatically adjusted as a result of fibroses.

FIGS. **43**A and **43**B show variations of a coil device positioned on a skull.

## DETAILED DESCRIPTION

In certain variations, apparatus and methods for magnetic induction therapy, in which dosage of magnetic energy can be regulated according to conduction in a target nerve exposed to the magnetic field are provided.

In certain variations, apparatus and methods for magnetic induction therapy, in which the flow of magnetic energy can be adjusted directionally by the patient or a healthcare provider without altering the position of a housing containing conductive coils that produce the magnetic field are provided.

In certain variations, apparatus and methods for treating a variety of ailments by providing energy to a target nerve, for example magnetic energy, electrical energy or ultrasound energy, at a location and in an amount optimized by detecting conduction in the target nerve are provided.

In certain variations, an energy emitting apparatus for delivering a medical therapy that includes one or more energy generators, a logic controller electrically connected to the one or more energy generators, and one or more sensors for detecting electric conduction in a target nerve, which are connected to the logic controller is provided. The one or more energy generators produce energy focused on the target nerve upon receiving a signal from the logic controller, and the applied energy is varied by the logic controller according to an input provided by the one or more sensors based on electric conduction in the target nerve. The feedback provided by the sensors to the logic controller about the efficacy of the applied treatment causes the logic controller to modulate the current transmitted to the coils.

The applied energy may be a magnetic field, an electrical field, an ultrasound, a visible light, or an infrared or an ultraviolet energy. When a magnetic field is applied, the energy-emitting device is an apparatus that provides a magnetic induction therapy and that includes one or more conductive coils disposed in an ergonomic housing. A logic controller is electrically connected to the one or more coils, and one or more sensors detect electric conduction in the target nerve and are connected to the logic controller so to provide a feedback to the logic controller. The conductive coils receive an electric current from the logic controller and produce a magnetic field focused on a target nerve, and the electric current fed by the logic controller is varied by the logic controller according to an input provided by the

sensors, thereby causing amplitude, frequency or direction of the magnetic field, or the firing sequence of the one or more coils, to be varied according to the efficiency of the treatment provided to the target nerve. In certain variations, the housing containing the conductive coils may be a flexible wrap, a cradle or a garment, and the coils may be overlapping and/or be disposed in different positions within the housing, so to generate a magnetic field on different body parts with the desired direction and amplitude.

The one or more coils may be stationary or movable within the housing, making it possible to optimize the direction of magnetic flow to the target nerve by disposing the coils in the most effective direction. In different variations, the coils may be movable manually by acting on a knob, lever, or similar type of actuator, or may be translated automatically by the logic controller in response to the input provided by the sensors. When a preferred position for the coils has been established, the coils may be locked in position and maintain that position during successive therapy sessions. In other variations, the sensors may be incorporated within the housing, or instead may be disposed on a body part of interest independently of the housing.

In still other variations, the inductive coils are disposed in a housing that is situated externally to a patient's body, and additional inductive coils are implanted into the body of the patient and are magnetically coupled to the external inductive coils. With this coil arrangement, energy may be transmitted from the external coils to the internal coils either to recharge or to activate an implantable device. In yet other variations, the electric current may varied by the logic controller both on the basis of an input provided by the one or more sensors and also an input provided by the patient according to a muscular response she has perceived, for example, the twitching of a toe after application of the magnetic field.

In yet other variations, the source of energy for nerve stimulation may be electrical energy and nerve conduction may be detected at a site sufficiently, distant from the site of stimulation, so to enable detection of nerve conduction despite the confounding interference from the direct electrical stimuli. In these variations, direct electrical stimulation of nerve and muscle may be tailored to provide optimal therapy and, in the case of electrode migration or other electrode malfunction, to report lack of stimulation of the bodily tissues. Furthermore, these variations enable a reduction in power requirement, because control of the signal is provided by the sensor to the signal generator loop.

In other variations, an energy emitting system for providing a medical therapy is provided. The system may include one or more conductive coils disposed within or along a housing and configured to generate a magnetic field focused on a target nerve in proximity to coils; one or more sensors in the form of microneedle patch configured to detect electrical conduction in the target nerve; and a controller coupled to the conductive coils and optionally in communication with the sensor.

In other variations, an energy emitting system for providing a medical therapy is provided. The system may include one or more microneedle patches having one or more microneedle arrays deposited on a surface of one or more electrodes and configured to generate or deliver an electrical or magnetic stimulus or field focused on a target nerve in proximity to the microneedle patch; one or more sensors configured to detect electrical conduction in the target nerve; and a controller coupled to the conductive coils and optionally in communication with the sensor. Optionally, the above variations may incorporate an electrode needle. Optionally, the above variations or systems may be utilized without a sensor or mechanism for detecting conduction or stimulation.

Methods of use of the above apparatus, systems and variations thereof for treating various conditions are also described herein.

Referring first to FIG. **1**, a first variation includes a coil wrap **20**, which is depicted as disposed over ankle **22** circumferentially to surround a portion of tibial nerve **24**. Because tibial nerve **24** is targeted, this variation is particularly suited for the treatment of OAB and VI. In other variations, coil wrap **20** may be configured to surround other body parts that contain a portion of tibial nerve **24** or of other nerves branching from or connected to tibial nerve **24**, still making these variations suitable for treating OAB and VI. In still other variations, coil wrap **20** may be configured for surrounding body parts that contain other nerves when treatments of other ailments are intended.

Coil wrap **20** may be manufactured from a variety of materials suitable for wearing over ankle **22**. Preferably, coil wrap is produced from a soft body-compatible material, natural or synthetic, for example, cotton, wool, polyester, rayon, Gore-Tex®, or other fibers or materials known to a person skilled in the art as non-irritating and preferably breathable when tailored into a garment. Coil wrap **22** may even be manufactured from a molded or cast synthetic material, such as a urethane gel, to add extra comfort to the patient by providing a soft and drapable feel. Additionally, coil wrap **20** may be produced from a single layer of material or from multiple material layers and may include padding or other filling between the layers.

Coil wrap **20** contains one or more conductive coils **26** arranged to produce a pulsed magnetic field that will flow across tibial nerve **24** and generate a current that will flow along tibial nerve **24** and spread along the length of tibial nerve **24** all the way to its sacral or pudendal nerve root origins. Coils **26** may be a single coil Shaped in a simple helical pattern or as a figure eight coil, a four leaf clover coil, a Helmholtz coil, a modified Helmholtz coil, or may be shaped as a combination of the aforementioned coils patterns. Additionally, other coil designs beyond those mentioned hereinabove might be utilized as long as a magnetic field is developed that will encompass tibial nerve **24** or any other target nerve. When a plurality of coils is utilized, such coils may be disposed on a single side of ankle **22**, or may be disposed on more than one side, for example, on opposing sides, strengthening, and directionalizing the flow of the magnetic field through tibial nerve **24** or other peripheral nerves of interest.

Coil wrap **20** is preferably configured as an ergonomic wrap, for example, as an essentially cylindrical band that can be pulled over ankle **22**, or as an open band that can be wrapped around ankle **22** and have its ends connected with a buckle, a hoop and loop system, or any other closing system known to a person skilled in the art. By properly adjusting the position of coil wrap **20** over ankle **22**, a patient or a health care provider may optimize the flow of the magnetic field through tibial nerve **24**, based on system feedback or on sensor), perceptions of the patient, as described in greater detail below.

The electric current that produces the magnetic field by flowing through coils **26** is supplied by a programmable logic controller **28**, which is connected to coils **26**, for example, with a power cord **32**. A sensor **30** that feeds information to logic controller **28** is also provided, in order to tailor the strength of the magnetic field and control activation of coils **26** based on nerve conduction. The

purpose of sensor **30** is to detect and record the firing of the target nerve and to provide related information to logic controller **28**, so to render the intended therapy most effective. For example, sensor input may cause logic controller **28** to alter the strength or pulse amplitude of the magnetic field based on sensor input, or fire the coils in a certain sequence.

In this variation, as well as in the other variations described hereinafter, sensor **30** may include one or more sensor patches and may be placed at different distances from the region of direct exposure to the magnetic field. For example, sensor **30** may be configured as a voltage or current detector in the form of an EKG patch and may be placed anywhere in the vicinity of the target nerve to detect its activation. For ease of description, the term "coils" will be used hereinafter to indicate "one or more coils" and "sensor" to indicate "one or more sensors," unless specified otherwise.

By virtue of the above described arrangement, coil, wrap **20** provides a reproducibly correct level of stimulation during an initial therapy session and during successive therapy sessions, because the presence or absence of nerve conduction is detected and, in sonic variations, measured when coil wrap **20** is first fitted and fine-tuned on the patient In addition to properly modulating the applied magnetic field, the positioning of coils **26** over ankle **22** may also be tailored according to the input provided by sensor **30**, so to fine-tune the direction of the magnetic field. Such an adjustment of the direction, amplitude, and level of the stimulation provided to the target nerve through the above described automated feedback loop, to ensure that peripheral nerve conduction is being achieved, is one of the key features.

If the magnetic pulse does not substantially interfere with sensor **30**, sensor **30** may be placed directly within the field of stimulation, so that power supplied to the system may be conserved. This is particularly important for battery-powered systems. Alternatively, sensor **30** may also be placed at a distance from the magnetic field and still properly detect neural stimulation.

In a method of use of coil wrap **20**, the amplitude and/or firing sequence of coils **26** may be ramped up progressively, so that the magnetic field is increased in strength and/or breadth until nerve conduction is detected, after which the applied stimulus is adjusted or maintained at its current level for the remainder of the therapy. The level of stimulation may be also controlled through a combination of feedback from sensor **30** and feedback based on perceptions of the patient. For example, the patient may activate a switch once she perceives an excessive stimulation, in particular, an excessive level of muscular stimulation. In one instance, the patient may be asked to push a button or turn a knob when she feels her toe twitching or when she experiences paresthesia over the sole of her foot. The patient will then continue pressing the button or keep the knob in the rotated position until she can no longer feel her toe twitching or paresthesia in her foot, indicating that that level of applied stimulation corresponds to an optimal therapy level. From that point on, the patient may be instructed to simply retain her foot, knee, or other limb within coil wrap **20** until therapy has been terminated while the system is kept at the optimal level. Adding patient input enables control of coil wrap **20** during outpatient treatments, because the patient is now able to adjust the intensity of the magnetic field herself beyond the signals provided to logic controller **28** by sensor **30**.

Detecting and, if the case, measuring conduction in one or more nerves along the conduction pathways of the stimulated nerve confirms that the target nerve has been stimulated, providing an accurate assessment of the efficiency of the applied therapy on the patient. A concomitant detection of muscle contraction may also confirm that the target nerve is being stimulated and provide an indication to the patient or to a healthcare provider as to whether stimulation has been applied at an excessive level in view of the anatomical and physiological characteristics of the patient.

Based on the foregoing, coil wrap **20** allows for a consistent, user-friendly targeting and modulation of the peripheral nerves via the posterior tibial nerve on an outpatient basis, in particular, the targeting and modulation of the pudendal nerve and of the sacral plexus. When multiple coils **26** are present, coils **26** may be activated simultaneously or differentially to generate the desired magnetic field. The direction and location of each of coils **26** may he reversibly or irreversibly adjusted by the healthcare provider or by the patient, customizing, the location of the applied stimulation to the anatomy and therapy needs of each patient. After a healthcare provider has optimized position and firing sequence for each of coils **26**, the patient may be sent home with coil wrap **20** adjusted to consistently target the desired nerve. In one variant of the present variation, an automatic feedback system adjusts one or more of firing sequence, firing strength or position of coils **26** within coil wrap **20** during the initial setup and also during successive therapy sessions.

In summary, certain variations include the creation of a loop consisting of feeding information on nerve conduction to logic controller **28** and on logic controller **28** tailoring the electrical current sent to coil wrap **20** according to the information received from sensor **26** based on whether or not the nerve is receiving the desired stimulation and, in some variations, the desired amount of stimulation. This arrangement offers an unparalleled level of therapy control and flexibility within a home care setting, because a consistent, repeatable stimulation of the target nerve can be attained. Aside from adjusting the position of coils **26** in accordance with the patient's anatomy and physiological variations, controlling pulse amplitude is also of great importance even during different therapy sessions with the same patient. For example, a patient with leg edema will encounter difficulties in properly adjusting coil wrap **20** based on whether her legs and ankles are swollen or not swollen, and the power required to penetrate to posterior tibial nerve **24** (in the case of a VI therapy) will vary greatly due to the variable depth of the nerve. Thus, having feedback provided by sensor **26** becomes a necessity for achieving an accurate dosage of the treatment rather than an option. Benchtop testing has demonstrated that a system constructed as described herein is capable of non-invasively generating electrical currents similar to those found in therapeutic electro-stimulation and to do so in different settings.

Referring now to FIG. **2**, a second variation will be described with reference to a coil wrap **34** disposed over ankle **36** for the purpose of treating VI by targeting tibial nerve **38**. In this second variation, one or more Helmholtz coils **40** are disposed within coil wrap **34** to create a more narrowly directed magnetic field over tibial nerve **38**. Like in the all other variations described herein, more than one coil (in the present variation, more than one Helmholtz coil **40**) may be placed within coil wrap **34** and be disposed in different positions within coil wrap **34**, in order to optimize magnetic flux over tibial nerve. For example, two Helmholtz coils may be disposed one opposite to the other within coil wrap **34**.

Having coil windings arranged along a common longitudinal axis, as required in a Helmholtz coil configuration, generates a more focused magnetic field and a more accurate targeting of tibial nerve **38** or of any other nerve. Like in the previous variation, the operation of coils **40** is controlled by a logic controller **42**, which is in turn connected to sensor **44** that monitors conduction in tibial nerve **44** and that generates a feedback to logic controller **42** about the efficiency of the therapy in progress. Therefore, like in the previous variation, the coupling of sensor **44** with logic controller **42** optimizes operation of coil wrap **34** according to results measured at the level of tibial nerve **38**. Also like in the previous variation, manual adjustments to the parameters of electric current provided by logic controller **42** to Helmholtz coil **40** may also be made manually by the patient or by a healthcare provider, and coil wrap **34** may be structured so that the position of Helmholtz coil **40** within coil wrap **34** is adjusted as desired either manually by the patient or by a healthcare provider, or automatically by logic controller **42**.

Referring now to FIG. **3**, a third variation includes a coil wrap **46** configured for wrapping over the popliteal fossa of a patient, in the region of the knee, to stimulate the posterior tibial nerve not shown). The configuration and structure of coil wrap **46** reflect the body portion covered by coil wrap **46**, but the key system components of coil wrap **46**, such as the type, number and disposition of the coils (for example, the use of overlapping coils); the connections of the coils with a logic controller; and the use of one or more sensors (also not shown) to detect nerve conduction are all comparable to those in the previously described variations.

Referring now to FIG. **4**, a fourth variation includes a footrest or foot cradle **48**, which is structured to contain at least a portion of a foot **50**. One or more coils **52** are enclosed within cradle **48**, and a sensor **54** is disposed along the pathway of tibial nerve **55**, sensing conduction in tibial nerve **55**, and is also connected to a logic controller **56**. Coils **52**, sensor **54** and logic controller **56** may be arranged in different configurations, in the same manner as in the preceding variations.

Cradle **48** may be made from a variety of materials and may be monolithic, or have a hollow or semi-hollow structure to enable the movement of coils **52** within cradle **48**, as described in greater detail below. Preferably, cradle **48** has an ergonomically design allowing the ankle and heel of the patient to be retained within cradle **48**, in a position that matches the positions of stimulating coils **52** to the area of stimulation. The design of cradle **48** provides for a particularly comfortable delivery of therapy to patients that prefer to remain seated during their therapy, and enables the patient to perform the required therapy within a health care facility, or to take cradle **48** home, typically after an initial session and appropriate training in a health care facility. In that event, the patient will be trained to apply sensor **54** autonomously and to adjust stimulation to a comfortable level.

FIG. **4** shows coils **52** disposed as overlapping and the use of a single sensor patch **54** positioned proximally to the stimulation site. However, coil **52** may be configured as a single coil, a figure eight coil, a four leaf clover coil, a Helmholtz coil, a modified Helmholtz coil or a any combination of the aforementioned coils, or as any other coil design providing an effective stimulation to the target nerve. In addition, coils **52** may be fired individually, sequentially or simultaneously according to the feedback provided by sensor **54**.

In one variant of this variation, sensor **54** may include a conductive electrode patch that provides a feedback to logic controller **56** for adjusting, if necessary, the stimulation parameters of coils **52**. Alternatively, sensor **54** may be a sensor patch that is either applied to the skin of the patient or is incorporated within the structure of cradle **48**.

Referring now to FIG. **5**, a fifth variation includes a knee rest or knee cradle **58** that contains one or more conductive coils **60**, one or more sensors **62** and a logic controller **64**. The components of this variation are similar to those described with reference to the preceding variations, as regards the structure and materials of cradle **58**, the nature and disposition of coils **60**, the type and operation of sensor **62**, and the function and operation of logic controller **64**. Cradle **58** is configured to target the popliteal fossa of the patient, thus to target tibial nerve **66**. In that respect, the present variation is similar to the variation illustrated in FIG. **3**, but while the variation of Fill **3** is configured as a wrap that may be worn while the patient is standing, the present variation is configured as a cradle that is more suited for treatment while the patient is sitting or laying down.

A method of use of the foot cradle depicted in FIG. **4** is described with reference to FIGS. **6**A-**6**D. During a first step illustrated in FIG. **6**A, foot **68** is disposed in cradle **70** that contains one or more conductive coils **72**, which are connected to a logic controller (not shown) that manages the flow of electric power to coils **72**.

During a second step illustrated in FIG. **6**B, a sensor **74** is disposed on foot **68** or on ankle **76** or on another appropriate portion of the patient's body, in order to detect conductivity in tibial nerve **78** or in another target nerve.

During a third stop illustrated in FIG. **6**C, a healthcare provider analyzes conductivity measurements provided by sensor **74** (for example, by reading gauge **77**) and first adjusts the positioning of coils **72** until conduction in nerve **78** is detected. For example, the healthcare provider may rotate a knob **80**, slide a lever or actuate any other displacement system for coils **72** that is known in the art, so that coils **72** are translated until a magnetic field of the proper amplitude and intensity is applied to cause conduction in nerve **78**. The position of coils **72** is then fine-tuned manually until an optimal level of conduction in nerve **78** is attained, and the therapy is continued for a length of time as prescribed by the attending healthcare provider.

During a fourth, optional step illustrated in FIG. **6**D, settings for successive therapy sessions are set, for example by locking knob **80** tin one variation, with a pin **81**) so that the healthcare provider or the patient repeat the therapy using the predetermined settings. Alternatively, the patient may be trained to adjust the amplitude and/or strength of the applied magnetic field, as each therapy session requires.

While the present method has been described with regard to foot cradle **70**, the same method steps may be envisioned for coil wraps or cradles of different configurations, for example, for the coil wraps and cradles described with reference to the previous figures.

In an alternative variation, the logic controller (not shown) may automatically adjust coil positioning to optimize therapy during the initial and successive sessions. While this set-up may be more difficult to implement, it also provides for an accurate targeting of the target nerve during each therapy session, regardless of alterations in patient positioning or changes to the anatomy of the patient (for example, when a foot is swollen). In this variation, the device simply varies the orientation of coils **84** until stimulation has been sensed.

Further, coils **84** may be translated along a single direction (for example, horizontally) or along a plurality of directions, to provide for the most accurate positioning of coils **84** with respect to the target nerve.

A second method of use of the foot cradle depicted in FIG. **4** is described now with reference to FIG. **7**. While this second method is also described with reference to a foot cradle **82** employing one or more coils **84** that have a reversibly lockable, adjustable orientation, the present method may be equally implemented with a body-worn coil wrap, such as those described with reference to the previous figures, or to other variations. In this method, the patient or the healthcare provider adjusts the positioning of coils **84** to detect conductivity in target nerve **89**.

The position of coils **84** may be translated in different directions (in the illustrated variation, may be translated horizontally) and may be locked in an initial position once conduction in nerve **89** is detected by a sensor (for example, sensing patch **86**).

More particularly, FIG. **7**A illustrates the initial positioning of foot **88** into cradle **82** and of sensor patch **86** on ankle **90** or other appropriate body part of the patient. After proper positioning of foot **88** is attained, a knob **92** (or other equivalent device) may be employed to adjust the position of coils **84**, based on the signals (for example, nerve conduction signals) provided by sensor patch **86**, as shown in FIG. **7**B.

With reference to FIG. **7**C, after neural conduction is detected, coils **84** are locked in place, and, with further reference to FIG. **7**D, foot cradle **82** retains coils **84** locked in position for further use in a home or healthcare office environment. Therefore, in the present method, the patient or a healthcare provider simply adjusts coil position by sliding coils **84** back and along one axis until electric conduction in the target nerve is detected, although adjustments along all three axes may be possible in different variants of the present variation.

Referring now to FIG. **8**, a sixth variation relates to the use of multiple sensors. While FIG. **8** depicts a variation shaped as a foot cradle **98**, it should be understood that the following description also relates to any other design, whether shaped as a cradle or a wrap or otherwise. The plurality of sensors **94** described herein may detect a variety of physiologic changes, including neural impulses, muscular contraction, twitching, etc. that may occur with neural or muscular stimulation.

One or more of the illustrated sensors **94** may be employed over body regions being stimulated (for example, back, leg, arm, neck, head, torso, etc.) and may be either incorporated within an actual cradle or wrap or, otherwise, be applied separately from the cradle or the wrap.

Sensors **94** may be structured as disposable, single-use, EKG-type patches that are attached to the body outside of cradle **98** along, the nerve conduction pathway and are then connected to the logic controller (not shown) before beginning therapy. This arrangement provides for an intimate body contact of sensors **94** without the risk of infection or other detrimental side effects that may be present with transcutaneous devices. Sensors **94** may be employed both for beginning and for monitoring the stimulation therapy; more specifically, sensors **94** may be employed during the beginning of the therapy to optimize the strength of the magnetic field and/or to adjust the positioning of coils **96** within the cradle **98**. Once therapy has begun, sensors **94** continue to monitor nerve conduction to ensure that the correct level of stimulation is being provided. In the event that for some reason nerve conduction decays during therapy, the logic controller can automatically adjust the magnetic field, ensuring that the appropriate therapy is delivered for the appropriate amount of time.

One or more of sensors **94** in this variation, or any of the variations described herein, may take the form of an inductive coil designed to receive impulses from the underlying nerves, so that inductive technologies may be used to both stimulate the nerve or tissues as well as to record the effect of the stimulation on nerves or tissues. Any of sensors **94** may be connected to the logic controller through one or more connection modes, including, but not limited to, wireless signals, wired signals, radio frequencies, Bluetooth, infrared, ultrasound, direct switching of the current circuit, etc., so long as communication between the sensor and the device is effective.

During implementation of the present method, a healthcare provider may simply elect to use sensors **94** to adjust the device, for example, to lock coils **96** into position, during the first therapy session and not require the use of sensors **94** during each successive therapy session.

Referring now to FIGS. **9**A-**9**D, there are shown different, non-limiting variations shaped as body worn ergonomic applicator garments. Each of these variations is shown with overlapping coils, although coils of any configurations may be used. Each of the wraps of FIGS. **9**A-**9**D corresponds to a coil wrap, into which a body part may be placed. These garments contain one or more sensors (not shown) that provide feedback to a logic controller (also not shown), or sensors may be applied separately from those garments. Systems may also be included for reversibly or irreversibly locking the coils within the applicator.

More particularly, FIG. **9**, A illustrates a variation, in which coils **100** are embedded in a knee wrap **102** and are connected to a logic controller (not shown) by a connector **104**. FIG. **9**B instead illustrates a variation, in which coils **106** are disposed within an abdominal garment, for example shorts **108** and in which coils **106** are also connected to a logic controller (not shown) by a connector **110**. A marking **112** may be added on one side of shorts **108** to indicate wrap orientation. FIG. **9**C illustrates a coil wrap shaped like a band **114**, in which coils **116** are connected to a logic controller (not shown) by a connector **118**. When this variation is employed, band **114** may be wrapped around a body portion (for example, an arm) and be retained in place by a system known in the art, for example, a hook and loop system, a strap and buckle system, or simply a hook disposed at one end of band **114** for engaging fabric or other material in another portion of band **114**. FIG. **9**D illustrates a variation shaped as a shoulder strap **120**, the length of which may be adjusted by a buckle **122** and which has coils **124** disposed in one or more points, for example, at the joint between an arm and a shoulder as shown. Each of these variations includes one or ore sensors (not shown) that may be coupled to the garment, or that may be applied separately from the garment.

Other variations that are not illustrated include, bur are not limited to: a head worn garment, such as a cap; a neck worn garment, such as a neck brace; and a lower-back garment. Each garment and applicator may also utilize the locking, targeting coil feature described previously, without requiring the use of the any sensing components after a proper positioning of the coils in relation to the target nerve or nerves has been established.

Still other variations are depicted in FIGS. **10** and **11**. In these variations, the source of energy for nerve stimulation is electrical energy that is dispensed through a percutaneous stimulator, such as a percutaneous needle **124**, or a transcutaneous stimulator, such as an electrode **126**. As shown in FIG. **10**, an electrical pulse controller **128** is electrically connected both to percutaneous needle **124** and to sensor

134, to provide the desired feedback and modulate the power to percutaneous needle 134. In the variation of FIG. 11, electrical pulse controller 130 is connected both to electrode 126 and to sensor 136, and performs a function similar to that of electrical pulse controller 128. With these variations, nerve conduction may be detected at a site sufficiently distant from the site of stimulation, so to enable detection of nerve conduction despite the confounding interference from the direct electrical stimuli. Further, direct electrical stimulation of nerve and muscle may be tailored to provide optimal therapy and, in the case of electrode migration or other electrode malfunction, to report lack of stimulation of the bodily tissues. Still further, these variations enable a reduction in power requirement, because control of the signal is provided by the sensor to the signal generator loop.

As shown, a device constructed according to the principles described herein provides a targeted and precise stimulation of the posterior tibial nerve, or of other peripheral nerves, in a noninvasive manner by employing an ergonomic wrap or cradle that specifically targets the posterior tibial nerve in a consistent and repeatable manner. For example, in patients with OAB or VI, the novel, reversibly lockable movement of the coils and the use of a logic controller-sensor loop enables the application of a magnetic field that can be varied in location, amplitude and strength according to the amount of stimulation actually induced in one or more target nerves and of the response of the patient to the therapy. An apparatus according to the variations described herein may deliver any frequency of stimulation, including low frequencies, high frequencies, mid frequencies and ultrahigh frequencies, and overlapping and non-overlapping coils may be used to generate the desired field, although overlapping or Helmholtz coils are preferred due to their ability to target a broader region and achieve more thorough stimulation.

Ailments that may be treated through the use of apparatus and methods as described herein include not only. OAB and VI, but also obesity, depression, urinary incontinence, fecal incontinence, hypertension, pain, back pain, restless leg syndrome, Guillain Barre syndrome, quadriplegia, paraplegia, diabetic polyneuropthy, dyskinesias, paresthesias, dental procedure pain, knee osteoarthritis, anesthesia (pain relief during surgery), Alzheimer's disease, angina (chest pain from heart disease), ankylosing spondylitis, back pain, bum pain, cancer pain, chronic pain, dysmenorrhea (painful menstruation), headache, hemiplegia, hemiparesis (paralysis on one side of the body), labor pain, local anesthesia during gallstone lithotripsy, facial pain, trigeminal neuralgia, bruxism (tooth grinding) pain, myofascial pain, pregnancy-related nausea or vomiting, neck and shoulder pain, pain from broken bones, rib fracture or acute trauma, diabetic peripheral neuropathy, phantom limb pain, post-herpetic neuralgia (pain after shingles), postoperative ileus (bowel obstruction), irritable bowel syndrome, postoperative nausea or vomiting, postoperative pain, post-stroke rehabilitation, rheumatoid arthritis, skin ulcers, spinal cord injury, temporomandibular joint pain, detrusor instability, spinal muscular atrophy (in children), pain during hysteroscopy, gastroparesis, chronic obstructive pulmonary disease rehabilitation, carpal tunnel syndrome, soft tissue injury, multiple sclerosis, intermittent claudication, attention-deficit hyperactivity disorder (ADHD), cognitive impairment, knee replacement pain, achalasia, atopic eczema, bursitis, carpal tunnel syndrome, dementia, depression, dry mouth, dystonia, enhanced blood flow in the brain, enhanced blood perfusion of the uterus and placenta, esophageal spasm, fibromyalgia, fracture pain, Guillain-Barre syndrome, hemophilia, herpes, hip pain, interstitial cystitis, irritable bowel syndrome, pruritis, joint pain, labor induction, local anesthesia, menstrual cramps, muscle cramps, muscle spasticity, muscle strain or pain, musculoskeletal trauma, myofascial pain dysfunction syndrome, nerve damage, osteoarthritis, pain medication adjunct, pancreatitis, Raynaud's phenomenon, repetitive strain injuries, sacral pain, schizophrenia, shingles, shoulder subluxation, sickle cell anemia pain, Skin flap ischemia (during plastic surgery), sphincter of Oddi disorders, sports injuries, thrombophlebitis, tinnitus (ringing in the ear), restless legs, tremor, whiplash and neuralgias. In contrast to implantable nerve stimulators, this therapy is completely non-invasive and does not require a major surgery to implant a permanent nerve stimulation device. Moreover, this therapy can be controlled to optimize the level of therapy delivered according to power consumption and nerve stimulation requirements and need not be delivered by a professional healthcare provider.

In other variations, neural stimulation may be applied as electrical transcutaneous stimulation, for example, by inserting an invasive electrical needle into a target body part and by modulating stimulation is modulated on the basis of information sent back to the logic controller from the one or more sensors that are used to detect and/or maintain the correct level of stimulation. The transcutaneous electrical stimulation sensor may be placed in the body independently or be incorporated within the wrap and may provide, among other things, feedback as to the quality of the electrical connection to the skin, which is directly related to the bum risk inherently associated with this type of therapy. In fact, these methods of stimulation may not be optimal due to the resulting skin irritation and risk of potential bums, a very serious issue in the large percentage of patients that have neuropathies. Even when patches are applied to monitor transcutaneous stimulation very closely, the patches may still become displaced and allow a bum to occur. Moreover, potentially interfering electrical impulses may develop at the treatment site, creating a noisy environment for the detection of nerve conduction.

In still other variations, an external coil or coils may be inductively connected to an implanted coil or coils may be utilized. In these variations, an ergonomic applicator may be adjusted by the user or by a healthcare provider such to optimize inductive power transmission between the external and implanted coils. One or more sensors may be utilized to provide a feedback that the relative coil positions have been optimized, and the external coil may then be reversibly locked into position within the ergonomic applicator. Two applications of this variation relate to the transfer of power to recharge an implantable device, and to the transfer of power to activate an implantable device.

In the first application, when an implantable rechargeable device is utilized, the external coils may be used for recharging the implanted device by means of inductive fields generated by the external coils. The external coils may include circuitry that determines the amount of resistance encountered by the magnetic field or other electrical properties related to the quality and degree of the magnetic coupling that is being established. Based on this feedback, the position of the external coils may be adjusted manually or automatically to optimize the coupling achieved with during each recharging session. Alternatively, a sensor may be incorporated into the implantable device and may communicate the degree and quality of the magnetic coupling to the external coils and/or the connected circuitry via wireless communication, providing a feedback for the automatic or manual adjustment of the external recharging coils.

The coils within the ergonomic applicator may be reversibly locked into place for the duration of the recharge session, and the implantable device may also communicate to the external recharging unit that the implantable device has been fully recharged, terminating the recharging session has been completed. By providing for an intermittent recharging of an implanted device, an apparatus according as described herein enables the implantable device to devote more power to performing its intended function optimally and with a lesser concern about protecting or extending battery life.

In the second application, the powering coils may contain circuitry to determine the amount of resistance encountered by the applied magnetic field, or other electrical properties that may reflect the quality and degree of the magnetic coupling that is being achieved. Based on this feedback, the powering coils in the applicator may be adjusted manually or automatically to activate and optimize the coil coupling at the beginning of each therapy session. Alternatively, a sensor may be incorporated into the implantable device and communicate the degree and quality of the magnetic coupling externally via wireless communication, which may in turn provide feedback for the automatic or manual adjustment of the powering coil. In one variant of the present variation, the inductive coils ma be magnetically coupled to a needle targeting the posterior tibial nerve.

An exemplary method of use of an apparatus as described herein on a patient suffering from VI and/or OAB includes the following steps:

The patient places a conductive wrap contained within a flexible material over a region of the ankle (or alternatively over the knee) to provide the required pulsed magnetic field. Alternatively, the patient may use an ergonomic foot/leg rest or cradle having embedded coils.

A sensor (for example, a sensor patch) is placed on the patient's body along the path of the nerve, ideally, proximal to the stimulation site to ensure afferent nerve stimulation, and is connected to a logic controller.

A physician or healthcare provider adjusts the coils in the wrap or cradle until nerve conduction is achieved based on patient and sensor feedback. An optimal position is sought, and the coils may be reversibly locked into position within the conductive wrap or ergonomic cradle and remain in this position during subsequent use.

During the therapy session, the logic controller provides an electric current to the coils, generating an inductive magnetic field. In one variation, this field begins at low amplitude and slowly ramps up until nerve conduction exceeds a threshold level, as signaled by the sensor and possibly by the patient, who may feel motory conduction. Alternatively, or more coils may also be activated to increase the covered area of stimulation in the event that stimulation does not occur with the initial coil configuration or is inadequate.

The optimal stimulation may be determined in a variety of manners, for example, by measuring exposure to electromagnetic fields capable of generating a square wave electric signal at a frequency of 10-30 Hz at the targeted tissue depth. The square wave configuration of the signal may be generated via Fourier transformation or may be a ramped current generated in any manner.

The inductive magnetic pulses continue for an appropriate duration of use, for example, for 15-30 minutes. The sensor may remain in place during the entire therapy session to ensure that stimulation occurs consistently and to provide for appropriate corrections if nerve conduction deteriorated. The logic controller may be powered either by a portable power source such as a battery, or by or a fixed power source such as a traditional wall outlet.

The conductive wrap and/or ergonomic cradle is removed from the body when therapeutic stimulation is riot being delivered, typically at the end of the therapy session.

The conductive wrap and/or ergonomic cradle is reapplied along with the sensor patch (ideally disposable) from time to time as indicated, for example, on a daily basis, and steps 4-8 are repeated.

The devices and methods described herein may be applied to any body tissues, including nerve, muscle, skin, vasculature, or any other organ or tissue, within the human body. Further, the devices and methods described herein may be used to treat any conditions suited for neuromodulation regardless of whether the stimulation source is an electromagnetic field, a direct electric current, a RF field, infrared energy, visible light, ultraviolet light, ultrasound, or other energy dispensing device.

In other variations, as shown in FIG. **12**, an energy emitting system **210** for providing a medical therapy includes one or more conductive coils **212** disposed within or along a housing **214**, one or more sensors **216** configured to detect electrical conduction in a target nerve or to detect muscle stimulation, and a controller **218** connected or coupled to the conductive coils **212** and optionally in communication with the sensor **216**. In certain variations (as shown in FIG. **12**), the controller **218** can be integral with the housing **214**). The coils **212** are configured such that an electrical current generated by the controller **218** is passed through the coils **212** generating a magnetic field which will stimulate a target nerve, e.g., the tibial nerve **220**, a muscle or other body part containing a portion of a target nerve, or any nerves branching off of a target nerve, located in proximity to the coils **212**. In this particular variation, the housing **214** is in the form of a foot cradle, as shown in FIG. **4**, however, the housing could also be in the form of a flexible wrap, garment or other design suitable for use with a subject. In various variations described herein, sensors may detect voltage or current and may be connected, coupled, wirelessly connected or coupled or otherwise in communication with the housing and/or controller using a variety of methods or techniques known in the art. The sensor may be placed over a muscle to detect muscle stimulation resulting from stimulating the target nerve (as shown in FIG. **12**) or over any other portion of the subject's body suitable for detecting conduction of the target nerve.

Referring to FIGS. **13** and **16**, the sensor may be in the form of a microneedle patch **228**, which can be removably attached to the skin surface of a subject. The microneedle patch **228** may include a housing **231**, having one or more electrodes **232** and one or more microneedles **235** deposited or arrayed on a surface of the electrode **232**, forming one or more microneedle arrays **234**. In FIG. **13**, microneedle patch **22$** has the shape of a square, and the microneedles **235** are arrayed on the bottom surface **236** of the electrode **232** in a 16×16 configuration. However, as shown in FIGS. **14-15**, microneedle patches may be designed in a variety of shapes, e.g., round, oval **229**, rectangular **230**, hexagonal, and a variety of sizes. The microneedles may be arrayed in a variety of arrangements and patterns (e.g., 14×14, 12×12, etc.) depending on the particular use and needles.

Additionally, microneedles may be attached, deposited, or arrayed on an electrode surface or patch in a variety of configurations and arrangements, depending on where the particular microneedle patch will be utilized and the treatment to be delivered. The number of microneedles included in an array can vary. For example, the number of

microneedles may range from about 5 to 500 or 100 to 400 or about 200 to 300 or about 256. In certain variations where microneedles are composed of strong, highly conductive material, the number of microneedles necessary may be less and may range from about 5 to 100 or 10 to 50 or 5 to 50. However, where microneedles are composed of higher resistance metal, a greater number of needles may be needed, e.g., about 100 to 500 or about 200 to 300 or greater than 500.

Referring to FIG. **18**, a magnified view of a microneedle array **234** composed of one or more microneedles **235** is shown. Microneedles **235** may include a base portion **238** and an upper portion **239**. Microneedles **235** may have lengths in the range of about 1 to 400 microns or 10 to 400 microns or preferably about 100 to 150 microns, and a diameter in the range of about 1 to 100 microns. A microneedle **235** may be tapered in diameter, going from a larger to smaller diameter from the base portion **238** to the upper portion **239** where the distal tip **240** of the microneedle is preferably pointed or sharp. The upper portion **239** of the microneedle **235** may have a diameter in the range of about 10-30 microns or about 15 to 25 microns. Optionally, for ease of production, the base portion **238** of the microneedle **235** may be thicker than the distal tip **240** or upper portion **239** of the microneedle **235**. In certain variations, as shown in FIG. **17**, a bulb **237** may be provided at the distal tip **240** of a microneedle **235** to provide for effective anchoring of the microneedle **235** in the skin of a patient or subject. Microneedles **335** can include any number of friction or grip increasing features. For example, they may include projections, barbs, bulbs or a roughened surface or tip. Microneedles **235** may take on various configurations, e.g., straight, bent, filtered, hollow or a combination of the above.

In other variations, microneedles may have lengths that range from about 480 to 1450 microns, widths from about 160 to 470 microns, thicknesses from about 30 to 100 microns and tip angles from about 20 to 90 degrees, and arrays can contain from 5 to 50 microneedles. For example, microneedles having these dimensions have been shown to be less painful than hypodermic needles. Length and number of microneedles can affect the level of pain experienced. Decreasing microneedle length and/or the number of microneedles may be beneficial and act to further reduce pain and provide comfort.

In certain variations, the one or more microneedles may include an electrically conductive material such that the microneedles may transmit an electrical signal to an overlying electrode or other surface. Microneedles may be constructed of an electrically conductive material and/or coated with an electrically conductive material. Optionally, microneedles may be coated with an electrically conductive material and constructed of a non-conductive material. Microneedles may be fabricated using a variety of materials, e.g., metals, stainless steel, solid or coat of gold over NI, Pd or Pd—Co, Pt, silicon, silicon dioxide, polymers, glass, biocompatible polymers, titanium, silver, or suture materials. Biodegradable polymers may also be used such that if a tip of a microneedle were to snap or break off during insertion, it would easily biodegrade.

A microneedle array **234** may be constructed or fabricated using any variety of manufacturing methods known to persons of ordinary skill in the art. Microneedles may be arrayed, attached, etched or deposited onto a surface of an electrode. In another variation, microneedles may be etched from or deposited onto a silicon electrode, such that the microneedle patch, including electrode and microneedles, are made from one material creating a durable and stable microneedle patch.

As shown in FIG. **18**, microneedles may be fabricated by creating micron sized holes on a silicon substrate and by using a KOH solution to create the needle shape. In other variations, the microneedles may be made of non-conductive material but may still be utilized to provide superior anchoring properties such that a microneedle patch may effectively adhere or attache to a subject's skin.

In certain variations, microneedle arrays are fabricated by patterning SU-8 onto glass substrates and defining needle shapes by lithography. The tips of the needles can be sharpened using reactive ion etching. Optionally, holes may be drilled, e.g., by laser, through the microneedles and base substrate. Holes may be drilled off-center, but parallel to the microneedle axis, terminating in side-opening, holes along the needle shaft below the needle tip. If desired, the holes can serve as micro fluidic needle bores for injection or infusion of drugs, medicines, insulin, proteins, nanoparticles that would encapsulate a drug or demonstrate the ability to deliver a virus for vaccinations, etc. to be used separately or in combination with electrical or magnetic therapy. The microneedles may also be coated with nickel by electroplating, which can increase their mechanical strength.

In certain variations, microneedle patches or microneedle electrode arrays are made by fabricating master structures from which replicates are molded and then made electrically active. For example, SU-8 may, be spun on a glass substrate bearing an array mask pattern, baked, and then exposed from the backside to from a tapered needle structure. Microneedles may be sharpened by RIE etching. A PDMS (polydimethylsiloxane) or similar material mold can then he copied from the master. A PMMA (polymethylmethacrylate) microneedle array is formed by solvent-casting and then released from the mold.

To provide the arrays with electrical functionality, a Ti/Cu seed layer may be deposited on the PMMA array and patterned by excimer laser to electrically isolate adjacent rows. A Ni layer (e.g., about 15 to 30 microns or 20 to 25 microns thick) may be electroplated on the patterned seed layer to enhance structural rigidity. A backside electrical connection to the array may be formed by backside etching of a hole and forming an electrical connection through the hole.

In another variation, the microneedle array is arranged in a 16×16 array (i.e., 256 needles). Each needle has a height of about 400 microns and the base diameter is about 100 microns. The pitch between Microneedles can be about 250 microns. The microneedle arrays are then coated with metal and laser-etched to provide electrical functionality. Optionally, rows of microneedles can be electrically isolated from each other so that alternating rows can provide alternating electrical polarity. The arrays are also interfaced with a power source. Microneedles may be made of polymer, coated with a metal, and etched to act as alternating electrodes. In certain variations, the firing sequence of the microneedles by rows or groups may be varied or configured to alternate.

In certain variations, a microneedle array may include one or more microneedles having multiple channels. For example, a multichannel silicon microneedle may be constructed to deliver bioactive compounds into neural or other tissue while simultaneously monitoring and stimulating neurons and nerves.

FIG. **19** shows a cross sectional view of the skin **10** composed of an outer stratum corneum **15** covering the

epidermis **16**. The skin also includes the dermis **18**, subcutaneous tissue/fat **12**, and these layers cover muscle tissue **14**. As shown in FIG. **19**, when a microneedle patch **228** is attached to a subject's skin, the microneedles **235** pierce the outer insulating stratum corneum layer **15**. The microneedle patch **228** can detect current passing through a stimulated nerve, and provide a superior signal as the current detected is conducted through the microneedles **235**, thereby bypassing the poorly conductive stratum corneum layer **15** which generally encompasses the outer 10 to 15 microns of skin, in other variations, microneedles **235** may be fabricated to be long enough to penetrate the stratum corneum **15**, but short enough not to puncture nerve endings, thus reducing the risk of pain, infection or injury.

In certain variations, microneedles are formed such that they are in direct contact with their corresponding or overlying electrodes. For example, a microneedle patch may include an adhesive electrode pad and may utilize a conductive gel to help hold the microneedles in place to prevent shear forces from breaking or bending the microneedles.

In certain variation, as shown in Ms. **20***a*-**20***d*, a microneedle patch or applicator may include multiple electrodes on a single patch or applicator, positive, negative, and/or control or ground electrodes, where the microneedles will he grouped in multiple arrays such that they conduct to the appropriate electrode. For example, FIGS. **20***a* and **20***b* show a single patch having positive, negative and control electrodes where a separate array of electrodes is in contact with each respective electrode. This arrangement can be created using a single patch. Alternatively, as shown in FIG. **20***c*, two patches may he implemented, one including the control electrode with corresponding microneedle array and the other including the positive and negative electrodes with corresponding microneedle arrays. The various electrodes could be interchanged. Alternatively, as shown in. FIG. **20***d*, three patches may be implemented, each having a separate electrode (control, positive, or negative) with a corresponding microneedle array. In use, in certain variations, the control may he attached above or near bone, while the positive and/or negative electrodes may be attached above nerve or muscle.

Referring again to FIG. **12**, the energy emitting system **210** can be used to treat or prevent various conditions, e.g., urinary incontinence, restless leg syndrome and fecal incontinence, among others. Energy emitting system **210** includes one or more conductive coils **212** disposed within or along a housing **214**, one or more sensors **216** configured to detect electrical conduction in the target nerve or to detect muscle stimulation, and a controller **218** coupled to the conductive coils **212** and optionally in communication with the sensor **216**. The coils **212** are configured such that an electrical current generated by the controller **218** is passed through the coils **212** generating a magnetic field which will stimulate a target nerve, e.g., the tibial nerve **220**, a muscle or other body part containing a portion of a target nerve, or any nerves branching off of a target nerve, located in proximity to the coils **212**. In this particular variation, the housing **214** is in the form of a foot cradle, as shown in FIG. **4**, however, the housing could also be in the form of a flexible wrap, garment or other design suitable for use with a subject.

Referring again to FIG. **12**, energy emitting system **210** may be used to treat or prevent various conditions, e.g., urinary incontinence, restless leg syndrome or fecal incontinence. In certain variations, a method of using the energy emitting system **210** includes positioning a first portion of a patient's body, for example a foot, ankle, or leg, relative to housing **214** such that a posterior tibial nerve **220** within the first portion of the patient's body is in proximity to one or more conductive coils **212** disposed within or along the housing. In this particular variation, a patient's foot is positioned in a housing which is in the form of a foot cradle **215**. A sensor in the form of a microneedle patch **228** may optionally be positioned along a second portion of the patient's body in proximity to the posterior tibial nerve **220**. In this particular variation, microneedle patch **228** is attached to the patient's foot over a muscle to detect muscle stimulation. Alternatively, a patch could be placed elsewhere on the patient, for example, on the leg in proximity to the posterior tibial nerve **220**, proximal to and up-stream from coils **212**. Microneedle patch **228** may be composed of one or more microneedle arrays and one or more electrodes, as described supra.

Once the patient's foot is in position and the microneedle patch **228** (e.g., conductive microneedle patch) is in place, a current is passed from controller **218** through coils **212**, and as a result, the coils **212** generate a magnetic field which is focused on the posterior tibial nerve **220**. The magnetic field stimulates tibial nerve **220**, generating a current that will flow along the tibial nerve **220** and spread along its length, to its sacral or pudendal nerve roots. Microneedle patch **228** detects corresponding muscle stimulation or twitching or electrical conduction through the stimulated posterior tibial nerve. Upon detection, the microneedle array may conduct and transmit an electrical signal to the overlying electrode of microneedle patch **228**. The signal may be transmitted to controller **218**, which can be integral or a separate controller or device, or a separate controller coupled to controller **218**. The controller can then be varied or adjusted (to adjust the current or magnetic field) based on the signal received from microneedle patch **228** to ensure that adequate conduction of the posterior tibial nerve **220** occurs and an adequate and accurate dosage of treatment is being received. Although shown utilizing, a sensor, it is also contemplated that the system could be used without a sensor.

Referring to FIG. **21**, the method of using energy emitting system **210** described above with respect to FIG. **12** may be varied such that a conductive microneedle patch **228** is placed in proximity to or proximally over the afferent posterior tibial nerve **220**, i.e., behind the patients knee. In this position, a conductive microneedle patch **228** detects electrical conduction through the afferent posterior tibial nerve, i.e., it detects the electrical signal traveling through the posterior tibial nerve back up to the brain and spinal cord or it may detect corresponding muscle stimulation. The microneedle patch **228** sends the signal to controller **218** or to a separate controller coupled to controller **218**. The controller can then be varied or adjusted based on the signal received from microneedle patch **228** to ensure that adequate conduction or stimulation of the posterior tibial nerve **220** occurs and an adequate and accurate dosage of treatment is being received.

A sensor utilized in the energy emitting system **210** may be a microneedle patch **228** as described above or optionally the sensor may a sensor type known in the art (e.g., EKG sensor) or as described in any of the variations herein. It is also contemplated that energy emitting system **250** can be utilized without a sensor. Optionally, the sensor may be positioned within or along the housing, e.g., the foot cradle, along with the one or more conductive coils, or positioned at a site distant from the housing or conductive coils.

In certain variations, energy emitting system **210** my optionally include one or more conductive microneedle patches which can be positioned in proximity to the target

nerve or muscle and provide an additional or supplemental electrical or magnetic stimulus to the target nerve or muscle.

Referring to FIG. **22**, the energy emitting system **210** described above with respect to FIG. **12** may be varied to create energy emitting system **260**. Energy emitting system **260** further includes one or more percutaneous electrode needles **262** or other needles or other percutaneous electrodes coupled to a controller **218** and having an end insertable into a subject's hod in proximity to said target nerve or stimulation site. The percutaneous electrode needle **262** is inductively coupled to one or more conductive coils **212**. In use, a first portion of a patient's body, for example a foot, ankle, or leg, is positioned relative to housing **214**, e.g., foot cradle **215**, such that a target nerve, e.g., posterior tibial nerve **220**, located within the first portion of the patient's body is in proximity to one or more conductive coils **212** disposed within or along the housing **214** Conductive coils **212** are positioned proximate, optionally down-stream or distal to, a selected stimulation site **261**. The percutaneous electrode needle **262** is inserted through the skin at a location and to a depth that brings the tip in close proximity to the stimulation site or target nerve to be stimulated. The controller **218** is activated and a current passes through conductive coils **212**. The resulting magnetic field generates a current that traverses the internal stimulation site **261** by passing from conductive coils **212** to the internal percutaneous electrode needle **262**, as indicated by arrow i. Also, the percutaneous electrode needle may be positioned within the generated magnetic field, whereby the magnetic field itself generates a current in the percutaneous electrode which stimulates a target nerve or traverses an internal stimulation site. Optionally, a current may be passed from the controller **218** through conductive coils **212** and/or from the controller **218** through percutaneous electrode needle **262**, traversing the internal stimulation site as the current passes between the coils and needle.

In energy emitting system **260**, current density and subsequent electric field intensity generated between conductive coils **212** and percutaneous electrode needle **262** is greater than that generated by traditional percutaneous stimulators. A greater electric field intensity makes site location for conductive coils **212** and percutaneous electrode needle **262** easier. Furthermore, the load impedance through the surface of the skin is much higher than the internal impedance, and as such, the relatively high load impedance lessens the likelihood of damage to tissue and nerves due to high current pulses.

Referring again to FIG. **22**, a percutaneous electrode needle for use in any of the energy emitting systems described herein may include a variety of designs. For example, percutaneous electrode needle **262** may include a metal or plastic handle **263** to provide a secure grip for the user, while minimizing the risk of shock to the user. The needle tip can have a terminal portion **264** which my extend between about 0.5 and 10 mm or about 2.0 mm from the needle tip and may be constructed out of medical grade stainless steel or other biocompatible metals. The diameter of the needle can be small (less than about 0.25 mm) which minimizes trauma during insertion. Optionally, needle **262** can be coated with Teflon or similar insulative material **265** except for an exposed tip area **264**. This allows for a higher field density at the tip for more precise operation. The exposed needle tip area **264** should have a sufficiently large surface area so as not to create too high a local current field that may cause irritation or pain.

In another variation, as shown in FIG. **23**, percutaneous electrode needle **272** may be used in energy emitting system **260**. Percutaneous electrode needle **272** may be constructed out of medical grade stainless steel or other biocompatible electrically conductive metal. Percutaneous electrode needle **272** includes a first end **276** for insertion into the patient's body in proximity to the preselected internal stimulation site or target nerve to be stimulated, and a second end **277**. The size of the needle electrode **272** is preferably small, fir example **34**G needle electrode (0.22×10 mm), to minimize trauma during insertion. Percutaneous electrode needle **272** may also include an electrically conductive adaptor, e.g., an electrically conductive tape member **273**. The tape member **273** includes an electrically conductive adhesive portion **274** and an electrically conductive non-adhesive portion **275**. Alternatively, the adaptor may include an electrically conductive clip. The second end **277** of the needle electrode **272** preferably includes an enlarged portion to enable the electrically conductive tape member **273** to be more easily adhered thereto. Once it is determined that the percutaneous needle electrode **272** is properly positioned, the needle is fixedly adhered to the electrically conductive tape member **273** by folding the ends of the adhesive portion **274** of the electrically conductive tape member **272** over the second end **277** of the needle electrode thereby forming an electrical connection there between. The percutaneous needle electrode **272** is electrically coupled to controller **218** via electrically conductive tape member **273**. Various other implantable or insertable electrode needles known to persons of skill in the art may also be utilized in the above described systems.

In certain variations of energy emitting system **260** as described above and shown in FIGS. **22-23**, a sensor **216**, such as a conductive microneedle patch **228**, may be utilized to detect electrical conduction through the stimulated posterior tibial nerve **220** or to detect muscle stimulation, and transmit the signal to controller **218**. The signal may be transmitted to controller **218**, a separate controller or device, or a separate controller coupled to controller **218**. The controller can then be varied or adjusted based on the signal from microneedle patch **228** to ensure that adequate conduction of the posterior tibial nerve **220** occurs and an adequate and accurate dosage of treatment is being received. It is also contemplated that energy system **260** may be utilized without a sensor **216**, see for example FIGS. **24-25**. Optionally, other types of sensors may be used in place of a microneedle patch sensor, such as other sensors described herein and sensors known to persons of ordinary skill in the art. The sensor may be placed over a portion of the subject's body suitable for detecting conduction of the target nerve (e.g., on the leg as shown) or over a muscle to detect muscle stimulation resulting from stimulating the target nerve.

In certain variations, as shown in FIG. **26**, an energy emitting system **250** for providing a medical therapy includes a microneedle patch **252** (e.g., conductive microneedle patch) having one or more microneedle arrays deposited on a surface of one or more electrodes; one or more sensors **221** configured to detect electrical conduction in the target nerve or to detect muscle stimulation; and a controller **218** coupled to microneedle patch **252** and in communication with sensor **221**. The microneedle patch **252** is configured such that an electrical current generated by the controller **218** is passed through the microneedle patch **252**, generating a magnetic field or delivering or generating an electrical or magnetic stimulus to a target nerve, e.g., the tibial nerve **220**, a muscle or other body part containing a portion of a target nerve, or any nerves branching off of a target nerve, located in proximity to microneedle patch **252**.

Referring to FIG. **26**, a method of using the energy emitting system **250** may include placing a conductive microneedle patch **252** on a first portion of a patient's body, for example a foot, ankle, or leg, in proximity to posterior tibial nerve **220** within the first portion of the patient's body. Sensor **221** is positioned along a second portion of the patient's body in proximity to the posterior tibial nerve **220**. In this particular variation, sensor **216** is attached to the patient's leg in proximity to the posterior tibial nerve **220**, proximal to and up-stream from conductive microneedle patch **25.2**. Conductive microneedle patch **252** is composed of one or more microneedle arrays and one or more electrodes, as described in the variations above.

Once conductive microneedle patch **252** and sensor **221** are in position, a current is passed from controller **218** through conductive microneedle patch **252**, resulting in an electrical stimulus of the posterior tibial nerve **220**. Alternatively, the microneedle array may be insulated or constructed of non conductive material such that the microneedle patch **252** generates a magnetic field that stimulates tibial nerve **220** in a manner similar to the one or more coils described in the variations above, without an electrical stimulus. Whether the stimulus is electrical or magnetic, either stimulus will generate a current that will flow along the tibial nerve **220** and spread along its length, to its sacral or pudendal nerve roots. Sensor **221** detects electrical conduction through the stimulated posterior tibial nerve **220**, and then transmits the signal to controller **218**. In certain variations, the sensor may be in the form of a microneedle patch sensor. The signal may be transmitted to controller **218**, a separate controller or device, or a separate controller coupled to controller **218**. The controller can then be varied or adjusted based on the signal from sensor **221** to ensure that adequate conduction of the posterior tibial nerve **220** occurs and an adequate and accurate dosage of treatment is being received.

The sensor utilized in the energy emitting system **250** may be a sensor of the type described above, with respect to other variations. Optionally, for example, the sensor may be a microneedle patch. It is also contemplated that energy emitting system **250** can be utilized without a sensor. The sensor may be placed over a portion of the subject's body suitable for detecting conduction of the target nerve (e.g., on the leg as shown) or over a muscle to detect muscle stimulation resulting from stimulating the target nerve.

In certain variations, energy emitting system **250** my optionally include one or more conductive coils disposed within or along a housing which can be positioned in proximity to the target nerve or muscle and provide an additional or supplemental stimulation of the target nerve or muscle.

Referring to FIG. **27**, the energy emitting system **250** described above with respect to FIG. **26** may be varied to create energy emitting system **280**. Energy emitting system **280** further includes one or more percutaneous electrode needles **262** coupled to a controller **218** and having an end insertable into a subject's body in proximity to said target nerve. Optionally, the electrode needle may be non-percutaneous, such that it is insertable in an orifice or opening in the subject, such as a natural orifice. The percutaneous electrode needle **262** is inductively coupled to conductive microneedle patch **252**. In use, a microneedle patch **252** is placed on a first portion of a patient's body, for example a foot, ankle, or leg, in proximity to posterior tibial nerve **220** within the first portion of the patient's body and downstream or distal to a selected stimulation site **261**. The percutaneous electrode needle **262** is inserted through the skin at a location and to a depth that brings the tip in close proximity to the target nerve to be stimulated.

The controller **218** is activated and a current passes through microneedle patch **252** and traverses the internal stimulation site **261** by passing from microneedle patch **252** to the internal percutaneous electrode needle **262**, as indicated by arrow i. The current passing through microneedle patch **252** may also generate a magnetic field which can generate a current that traverses the internal stimulation site **261** by passing from microneedle patch **252** to the internal percutaneous electrode needle **262**. Also, the percutaneous electrode needle may be positioned within the generated magnetic field, whereby the magnetic field generates a current in the percutaneous electrode which stimulates a target nerve and traverses an internal stimulation site. Optionally, a current may be passed from the controller **218** through microneedle patch **252** and/or from the controller **218** through percutaneous electrode needle **262**, traversing the internal stimulation site as the current passes between the patch and needle.

Referring to FIG. **28**, energy emitting system **280** may be modified by using percutaneous electrode needle **272** in place of percutaneous electrode needle **262**. Percutaneous electrode needle **272** would be constructed and function as described above with respect to FIG. **23**. Various other implantable or insertable electrode needles known to persons of skill in the art may also be utilized in the above described systems. Additionally, energy emitting system **280** may utilize a sensor to detect electrical conduction through the stimulated posterior tibial nerve **220** and send a corresponding signal indicative of the detected conduction to controller **218** or other device such that the electrical or magnetic stimulus can be adjusted as necessary. The sensor may be a sensor **221**, or optionally the sensor may be a microneedle patch. It is also contemplated that energy emitting system **280** can be utilized without a sensor. The sensor may be placed over a portion of the subject's body suitable for detecting conduction of the target nerve (e.g., on the leg as shown) or over a muscle to detect muscle stimulation resulting from stimulating the target nerve.

In any of the above systems, variations are contemplated where the sensors are also coupled or connected to or otherwise in communication with energy emitting devices, e.g., the conductive coils or conductive microneedle patches.

In certain variations, the one or more microneedles of the microneedle patch may include an electrically conductive material such that the microneedles may transmit an electrical signal to an overlying electrode or other surface. Microneedles may be constructed of an electrically conductive material and/or coated with an electrically conductive material. Optionally, microneedles may be coated with an electrically conductive material and constructed of a non-conductive material. Microneedles may be fabricated using a variety of materials, e.g. metals, stainless steel, solid or coat oft old over NI, Pd or Pd—Co, Pt, silicon, silicon dioxide, polymers, glass, biocompatible polymers, titanium, silver, or suture materials. Biodegradable polymers may also be used such that if a tip of a microneedle were to snap or break off during insertion, it would easily biodegrade. Optionally, the microneedle patch may be non-conductive.

In certain variations, an electrode patch for improved conductance or conduction is provided. The patch can include at least one electrode having a first surface and/or a second surface. The electrode may optionally be attached to various other materials or adhesive materials. An array of microneedles may be deposited on a surface of the electrode, or attached to a patch or other material and indirectly or

directly connected to the electrode. The array of microneedles may include a conductive material. Such patches may be used as a sensor to detect muscle stimulation or electrical conduction, or to provide or deliver an electrical stimulus or magnetic field, e.g., to a target nerve, and may optionally he used in any of the variations described herein or in any application where improved conductance or conduction is desired. Microneedles yield improved reduction in impedance compared to simple abrasion and other techniques, and are less painful and more comfortable for the patient.

In certain variations, typical voltage sensed at the skin and detectable or conductable by a microneedle patch or microneedle array may range from about 1 to 400 microvolts or about 10 to 300 microvolts.

In certain variations, methods of treating a subject with urinary incontinence or various pelvic floor disorders utilizing the energy emitting systems described herein are contemplated. Symptoms associated with urinary incontinence may be observed, detected, or diagnosed. An energy emitting device having one or more energy generators, e.g., one or more conductive coils or one or more microneedle patches, may be positioned in proximity to a target nerve, e.g., the tibial or posterior tibial nerve or popliteal or sacral nerve or branches thereof of a subject or patient along a first portion of a subject's or patient's body. The subject may or may not be exhibiting symptoms associated with urinary incontinence. In the case of the conductive coils, the coils may be positioned within or along a housing, such as a foot or knee cradle, and a foot or leg may be positioned therein. In the case of a microneedle patch, the patch may be attached to a subject's skin. Optionally, the method involves positioning a first portion of a subject's body, the subject exhibiting symptoms associated with urinary incontinence, relative to an energy emitting device such that a target nerve within the first portion of the body is in proximity to at least one energy generator disposed within or along the energy emitting device.

A current is then passed through the energy generator to produce, generate or deliver energy, e.g., a magnetic or electromagnetic field or electrical or magnetic energy or stimulus, focused on the tibial or posterior tibial nerve or branches thereof. This in turn may cause the stimulation of a pudendal nerve, sacral plexus, or other nerves in the pelvic floor. Various nerves innervating the various muscles, sphincters, nerves, organs and conduits of the urinary tract and bladder may be stimulated directly or indirectly. In certain variations, a current is passed through one more coils, which generate a magnetic or electromagnetic field which stimulates the posterior tibial nerve. In certain variations, the positioning of the coils relative to the first portion of the subject's body may be adjusted to re-focus the magnetic field on the posterior tibial nerve as needed. In certain variations, a current is passed through a microneedle patch generating or delivering; an electrical or magnetic stimulus or field. The positioning of the microneedle patch relative to the first portion of the subject's body may be adjusted to re-focus the electrical or magnetic stimulus or field on the posterior tibial nerve as needed.

Optionally, electrical conduction through the target nerve, e.g., the posterior tibial nerve, or muscle stimulation can be detected via at least one sensor. A conductive sensor may be positioned in proximity to the posterior tibial nerve along a second portion of the subject's body. Optionally, a sensor may be positioned over a corresponding muscle to detect muscle stimulation or twitching resulting from nerve stimulation. Optionally, the electrical conduction is detected along a second portion of the subject's body which is different from the first portion of the body. Optionally, the sensor in the form of a microneedle patch. In certain variations, the sensor may be positioned behind a subject's knee to detect the electrical conduction along the afferent posterior tibial nerve or on another portion of a patient's leg or foot. In other variations, the sensor may be positioned within or along a housing along with the one or more conductive coils.

Where a sensor is used, a signal is received from the sensors and the signal is indicative of the electrical conduction of the target nerve, e.g., posterior tibial nerve. The current may be adjusted or varied using a controller which is in communication with the energy generator. Adjustments may be made in response to the nerve or muscle stimulation detected by the conductive sensor, in order to optimize or ensure adequate treatment of urinary incontinence bye achieving the appropriate level of conductance and appropriate level of nerve or muscle stimulation. Appropriate levels or parameters for current, frequency, magnetic field, treatment duration, etc., are those that result in an observed or detected reduction or prevention of symptoms associated with urinary incontinence. Treatment could also be administered and the appropriate levels and parameters achieved through observing or detecting reduction or prevention of symptoms where a sensor is not used. Examples of these symptoms include but are not limited to the inability to control urinary function, urinary leakage, and loss of bladder control.

In certain variations, the amplitude, frequency, direction of a generated magnetic field, electrical or magnetic stimulus, or firing sequence of the coils or microneedles making up the microneedle array may be adjusted. Optionally, the current may be varied according to a muscular response in the patient. Thus, to treat urinary incontinence, the magnetic field or electrical stimulus is applied to a subject or patient until the desired effects (e.g., reduction of symptoms) are achieved.

In certain variations, methods of treating a subject with fecal incontinence utilizing the energy emitting systems described herein are contemplated. Symptoms associated with fecal incontinence may be observed, detected, or diagnosed. An energy emitting device having one or more energy generators, e.g., one or more conductive coils or one or more microneedle patches, may be positioned in proximity to a target nerve, e.g., the tibial or posterior tibial nerve, or popliteal or sacral nerve or branches thereof, of a subject along a first portion of a subject's body. The subject may or may not be exhibiting symptoms associated with fecal incontinence, in the case of the conductive coils, the coils may be positioned within or along a housing, such as a foot or knee cradle, and a foot or leg may be positioned therein. In the case of a microneedle patch, the patch may be attached to a subject's skin. Optionally, the method involves positioning a first portion of a subject's body, the subject exhibiting symptoms associated with fecal incontinence, relative to an energy emitting device such that a target nerve within the first portion of the body is in proximity to at least one energy generator disposed within or along the energy emitting device.

A current is then passed through the energy generator to produce, generate or deliver energy, e.g., a magnetic or electromagnetic field or electrical or magnetic energy or stimulus, focused on the tibial or posterior tibial nerve or branches thereof This in turn causes the stimulation of a pudendal nerve, sacral plexus, or nerves in the pelvic floor. Various nerves innervating the various muscles, sphincters, rectum, nerves, organs and conduits associated with bowel

movements, fecal control, and the intestines may be stimulated directly or indirectly. Optionally, a current is passed through one more coils, which generate a magnetic or electromagnetic field which stimulates the posterior tibial nerve. In certain variations, the positioning of the coils relative to the first portion of the subject's body may be adjusted to re-focus the magnetic field on the posterior tibial nerve as needed. In certain variations, a current is passed through a microneedle patch generating or delivering an electrical or magnetic stimulus or field. The positioning of the microneedle patch relative to the first portion of the subject's body may be adjusted to re-focus the electrical or magnetic stimulus or field on the posterior tibial nerve as needed.

Optionally, electrical conduction through the target nerve, e.g., the posterior tibial nerve, or muscle stimulation can be detected via at least one sensor. A conductive sensor may be positioned in proximity to the posterior tibial nerve along a second portion of the subject's body. Optionally, a sensor may be positioned over a corresponding muscle to detect muscle stimulation or twitching resulting; from nerve stimulation. Optionally, the electrical conduction is detected along a second portion of the subject's body which is different from the first portion of the body. Optionally, the sensor is in the form a of a microneedle patch. In certain variations, the sensor may be positioned behind a subject's knee to detect the electrical conduction along the afferent posterior tibial nerve or on another portion of a patient's leg or foot. In other variations, the sensor may be positioned within or along a housing along with the one or more conductive coils.

Where a sensor is used, a signal is received from the sensors and the signal is indicative of the electrical conduction of the target nerve, e.g., posterior tibial nerve. The current may be adjusted or varied using a controller which is in communication with the energy generator. Adjustments may be made in response to the nerve or muscle stimulation detected by the conductive sensor, in order to optimize or ensure adequate treatment of fecal incontinence by achieving the appropriate level of conductance and appropriate level of nerve or muscle stimulation. Appropriate levels or parameters for current, frequency, magnetic field, treatment duration, etc., are those that result in an observed or detected reduction or prevention of symptoms associated with fecal incontinence. Treatment could also be administered and the appropriate levels and parameters achieved through observing or detecting reduction or prevention of symptoms where a sensor is not used. Examples of these symptoms include but are not limited: the loss of voluntary control to retain stool in the rectum; loss of fecal control; inability to control bowel movements, and focal leaking.

In certain variations, the amplitude, frequency, direction of a generated magnetic field, electrical or magnetic stimulus, or firing sequence of the coils or microneedles making up the microneedle array may be adjusted. Optionally, the current may be varied according to a muscular response in the patient. Thus, to treat fecal incontinence, the magnetic field or electrical stimulus is applied to a subject or patient until the desired effects (e.g., reduction of symptoms) are achieved.

In certain variations, methods of treating a subject with restless leg syndrome utilizing the energy emitting systems described herein are contemplated. Victims afflicted with Restless Leg Syndrome (RLS or Ekbom's syndrome), are unable to remain seated or to stand still. Activities that require maintaining motor rest and limited cognitive stimulation, such as transportation, e.g., in a car, plane, train, etc., or attending longer meetings, lectures, movies or other performances, become difficult if not impossible. These sensations become more severe at night and RLS patients find sleep to be virtually impossible, adding to the diminishing quality of their lives. The urge to move, which increases over periods of rest, can be completely dissipated by movement, such as walking. However, once movement ceases, symptoms return with increased intensity. If tin RLS patient is forced to lie still, symptoms will continue to build like a loaded spring and, eventually, the legs will involuntary move, relieving symptoms immediately.

Thus, symptoms associated with restless leg syndrome may be observed, detected, or diagnosed. An energy emitting, device having one or more energy generators, e.g., one or more conductive coils or one or more microneedle patches, may be positioned in proximity to a target nerve, e.g., the tibial or posterior tibial nerve, or popliteal or sacral nerve or branches thereof or other nerves associated with restless leg syndrome, of a subject along a first portion of a subject's body. The subject may or may not be exhibiting symptoms associated with restless leg syndrome. In the case of the conductive coils, the coils may be positioned within or along a housing, such as a foot or knee cradle, and a foot or leg may be positioned therein. In the case of a microneedle patch, the patch may be attached to a subject's skin. Optionally, the method involves positioning a first portion of a subject's body, the subject exhibiting symptoms associated with restless leg syndrome, relative to an energy emitting device such that a target nerve within the first portion of the body is in proximity to at least one energy generator disposed within or along the energy emitting device.

A current is then passed through the energy generator to produce, generate or deliver energy, e.g., a magnetic field or electrical or magnetic energy or stimulus, focused on the tibial or posterior tibial nerve or branches thereof or other nerves associated with restless leg syndrome. This in turn causes the stimulation of a pudendal nerve, sacral plexus or other nerves innervating the pelvic floor or various muscles, nerves, or organs associated with restless leg syndrome. The various nerves may stimulated directly or indirectly. Optionally, a current is passed through one more coils, which generates a magnetic or electromagnetic field which stimulates the posterior tibial nerve. In certain variations, the positioning of the coils relative to the first portion of the subject's body may be adjusted to re-focus the magnetic field on the posterior tibial nerve as needed. In certain variations, a current is passed through a microneedle patch generating or delivering an electrical or magnetic stimulus or field. The positioning of the microneedle patch relative to the first portion of the subject's body may be adjusted to re-focus the electrical or magnetic stimulus or field on the posterior tibial nerve as needed.

Optionally, electrical conduction through the target nerve, the posterior tibial nerve, or muscle stimulation can be detected via at least one Sensor. A conductive sensor may be positioned in proximity to the posterior tibial nerve along a second portion of the subject's body. Optionally, a sensor may be positioned over a corresponding muscle to detect muscle stimulation or twitching resulting from nerve stimulation. Optionally, the electrical conduction is detected along a second portion of the subject's body which is different from the first portion of the body. Optionally, the sensor in the form a of a microneedle patch. In certain variations, the sensor may be positioned behind a subject's knee to detect the electrical conduction along the afferent posterior tibial nerve or on another portion of a patient's leg or foot. In other

variations, the sensor may be positioned within or along a housing along with the one or more conductive coils.

Where a sensor is used, a signal is received from the sensors and the signal is indicative of the electrical conduction of the target nerve, e.g., posterior tibial nerve. The current may be adjusted or varied using a controller which is in communication with the energy generator. Adjustments may be made in response to the nerve or muscle stimulation detected by the conductive sensor, in order to optimize or ensure adequate treatment of restless leg syndrome by achieving the appropriate level of conductance and appropriate level of nerve or muscle stimulation. Appropriate levels or parameters for current, frequency, magnetic field, treatment duration, etc., are those that result in an observed or detected reduction or prevention of symptoms associated with restless leg syndrome. Treatment could also be administered and the appropriate levels and parameters achieved through observing or detecting reduction or prevention of symptoms where a sensor is not used. Examples of these symptoms include but are not limited to: uncomfortable sensations in the limbs, irresistible urges to move, usually the legs; motor restlessness; when at rest, symptoms return or worsen; and symptoms worsen in the evening and at night.

In certain variations, the amplitude, frequency, direction of a generated magnetic field, electrical or magnetic stimulus, or firing sequence of the coils or microneedles making up the microneedle array may be adjusted. Optionally, the current may be varied according to a muscular response in the patient. Thus, to treat restless leg syndrome, the magnetic field or electrical stimulus is applied to a subject or patient until the desired effects (e.g., reduction of symptoms) are achieved.

In certain variations, methods of treating a subject suffering from premature ejaculation or various pelvic floor disorders utilizing the energy emitting systems described herein are contemplated. Symptoms associated with premature ejaculation may be observed, detected, or diagnosed. An energy emitting device having one or more energy generators, e.g., one or more conductive Coils or one or more microneedle patches, may be positioned in proximity to a target nerve, e.g., the tibial or posterior tibial nerve or popliteal or sacral nerve or branches thereof of a subject along a first portion of a subject's body. The subject may or may not be exhibiting symptoms associated with premature ejaculation. In the case of the conductive coils, the coils may be positioned within or along a housing, such as a foot or knee cradle, and a foot or leg may be positioned therein. In the case of a microneedle patch, the patch ma be attached to a subject's skin. Optionally, the method involves positioning a first portion of a subject's body, the subject exhibiting symptoms associated with premature ejaculation, relative to an energy emitting device such that a target nerve within the first portion of the body is in proximity to at least one energy generator disposed within or along the energy emitting device.

A current is then passed through the energy generator to produce, generate or deliver energy, e.g., a magnetic or electromagnetic field or electrical or magnetic energy or stimulus, focused on the tibial or posterior tibial nerve or branches thereof. This in turn may cause the stimulation of a pudendal nerve, sacral plexus, or other nerves in the pelvic floor or nerves associated with the control of ejaculation. Various nerves innervating the various muscles, sphincters, nerves, organs and conduits of the urinary tract, bladder or reproductive system, or pelvic floor may be stimulated directly or indirectly. Optionally, a current is passed through one more coils, which generates a magnetic or electromagnetic field which stimulates the posterior tibial nerve. In certain variations, the positioning of the coils relative to the first portion of the subject's body may be adjusted to re-focus the magnetic field on the posterior tibial nerve as needed. In certain variations, a current is passed through a microneedle patch generating or delivering an electrical or magnetic stimulus or field. The positioning of the microneedle patch relative to the first portion of the subject's body may be adjusted to re-focus the electrical or magnetic stimulus or field on the posterior tibial nerve as needed.

Optionally, electrical conduction through the target nerve, e.g., the posterior tibial nerve, or muscle stimulation can be detected via at least one sensor. A conductive sensor may be positioned in proximity to the posterior tibial nerve along a second portion of the subject's body. Optionally, a sensor may be positioned over a corresponding muscle to detect muscle stimulation or twitching resulting from nerve stimulation. Optionally, the electrical conduction is detected along a second portion of the subject's body which is different from the first portion of the body. Optionally, the sensor in the form of a microneedle patch. In certain variations, the sensor may be positioned behind a subject's knee to detect the electrical conduction along the afferent posterior tibial nerve or on another portion of a patient's leg or foot. In other variations, the sensor may be positioned within or along a housing along with the one or more conductive coils.

Where a sensor is used, a signal is received from the sensors and the signal is indicative of the electrical conduction of the posterior tibial nerve. The current may be adjusted or varied using a controller which is in communication with the energy generator. Adjustments may be made in response to the nerve or muscle stimulation detected by the conductive sensor, in order to optimize or ensure adequate treatment of premature ejaculation by achieving the appropriate level of conductance and appropriate level of nerve or muscle stimulation Appropriate levels for current, frequency, magnetic field, treatment duration. etc., are levels that result in an observed or detected reduction or prevention of symptoms associated with premature ejaculation. Treatment could also be administered and the appropriate levels and parameters achieved through observing or detecting reduction or prevention of symptoms where a sensor is not used. Examples of these symptoms include but are not limited to: ejaculation that frequently occurs within one minute or less of penetration, the inability to delay ejaculation on penetrations; or persistent or recurrent ejaculation with minimal stimulation before, on or shortly after penetration.

In certain variations, the amplitude, frequency, direction of a generated magnetic field, electrical or magnetic stimulus, or firing sequence of the coils or microneedles making up the microneedle array may be adjusted. Optionally, the current may be varied according to a muscular response in the patient. Thus, to treat premature ejaculation, the magnetic field or electrical stimulus is applied to a subject or patient until the desired effects (e.g., reduction of symptoms) are achieved.

Exemplary treatment parameters for treating various conditions, e.g., urinary incontinence, using the systems and methods described herein may include the following. Operation of a conductive coil at about 10 to 20 hertz generating a magnetic field of about 0.25 to 1.5 tesla, where the coil is administered to a patient for a duration of about 30 minutes/day or 30 minutes per week, depending on the severity of the symptoms, until the symptoms subside. The above treatment parameters or variations on the parameters may be used for

treatment of urinary incontinence, fecal incontinence, restless leg syndrome, or premature ejaculation or other conditions. For example, the coil may be operated at various parameter ranges Ming with the following ranges: about 5 to 100 hertz, about 1 to 10 tesla, for about 15 minutes to 2 hours per day or week. In treating premature ejaculation, a patient may receive treatment about 4 to 10 hours prior to intercourse. A maintenance phase of treatment, after the initial treatment, may vary for various conditions. For example, the maintenance phase may require application of the systems and methods described herein at the parameters described herein for 30 minutes/week or 30 minutes/month. Any treatment parameter may be varied or modified based on the effect on the patient or sensor or patient feedback regarding stimulation, until the desired result of treating or preventing a condition is achieved.

In certain variations, as shown in FIGS. **29***a*-**29***d*, energy emitting device may include a controller **289** and a foot cradle **290**. Foot cradle **290** may include vertical foot plate **291**, and horizontal foot plate **292**, where each plate can be adjusted using vertical foot plate knob **293** and horizontal foot plate knob **294**. One or more EMG plugs **295** are provided. An air core coil **297** or other type of coil is provided. A display screen **296** may also be provided along with power cord **298**. The display screen **296** can display a variety of information to the user and/or practitioner such as the level of power or current applied, treatment time, temperature of the cradle device, detected current levels and/or physiological parameters, etc., to facilitate effective and efficient therapeutic treatment. The information can be used to vary or adjust the controller to ensure that adequate conduction of a target nerve, e.g., posterior tibial nerve **220** or muscle stimulation occurs and an adequate and accurate dosage of treatment is being received. Controls may also be included to affect the following: power, field strength, frequency, pulse, start/pause and cancelation of therapy (as shown) or other parameters one of skill in the art would find necessary or useful to control or monitor. In certain variations, a sensor may be connected, connected or in communication with the foot cradle or other energy emitting apparatus, controller, housing, conductive coils, or microneedle patch.

In certain variations, as shown in FIGS. **30**A-**30**B, an energy emitting device may include a controller and a knee support or knee cradle. The cradle may be configured to provide the conductive coil in proximity to the popliteal fossa or area directly behind the knee. In certain variations, the knee cradle may be configured to cradle or surround at least a portion of the knee or substantially the entire knee without placing direct pressure on the popliteal fossa, thereby minimizing or avoiding venous thrombosis. In one variation, the device may be utilized while the knee is in the flexed position (FIG. **30**A). In another variation, the device may be utilized while the knee is in a non-flexed position (FIG. **30**B).

In certain variations, the energy emitting device, e.g., foot support or cradle, knee support or cradle, etc., includes a conductive coil positioned such that a target nerve is automatically targeted. The conductive coil is configured, sized and positioned within the device such that the generated magnetic field may encompass and stimulate the target nerve in any patient based on the target nerve's anatomical location, thus providing automatic targeting of the nerve in any patient once the patient positions a particular body portion in the device.

In certain variations described herein, sensors may detect voltage or current and may be connected, coupled, wirelessly connected or coupled or otherwise in communication with housing, conductive coils, microneedle patch, energy emitting apparatus, energy generators, or electrode needles and/or controller using a variety of methods or techniques known in the art. In various variations described herein, housings, conductive coils, microneedle patches, energy emitting apparatus, energy generators, or electrode needles may be connected, coupled, wirelessly connected or coupled or otherwise in communication with each other, controllers or sensors, using a variety of methods or techniques known in the art.

Coils used in any of the variations described herein and illustrated in the corresponding figures may take on a variety of shapes, sizes, and configurations. For example, a coil may be shaped as a spiral (as shown) or have a simple helical pattern or be a figure eight coil, a four leaf clover coil, a Helmholtz coil, a modified Helmholtz coil, or may be shaped as a combination of the aforementioned coil patterns. Additionally, other coil designs beyond those mentioned hereinabove might be utilized as long as a magnetic field is developed that will encompass a target nerve.

The coils may have a variety of dimensions and configurations. In certain variations, a coil may have a central aperture. The diameter of the aperture may range from about 0.5 inch to 2 inches or 1 inch to 1.5 inches or the aperture may have a diameter of about 1 inch. The diameter of the coil body may vary. For example, the diameter may range from about 3.0 to about 7 inches or from about 4 to about 5 inches or the diameter may about 4.5 inches. The coil body may include any suitable number of turns. For example, the coil body may include from about 2 to about 25 turns or from about 10 to about 20 turns or 14 to 17 turns. The adjacent turns may be spaced apart from each other, providing a gap there between. An end or cross section of a turn may have various dimensions. For example, the end or cross section may have a height that is greater than its width. An end or cross section of a turn may have a height ranging from about 1 to 5 cm or from about 10 mm to 51 mm (about 0.3 inches to 2 inches) or about 25 mm to 40 mm (about 1 inch to 1.5 inches) or about 12 mm to 40 mm (about 0.5 inch to 1.5 inch) or about 0.5 inch to 2 inch. The end or cross section of the turn may have a width ranging from about 0.5 mm to about 5 mm (about 0.019 inch to 0.19 inch) or from about 1 mm to about 2 mm (about 0.03 inch to 0.07 inch) or about 0.2 mm to about 1.6 mm (about 0.01 inch to 0.06 inch). The above are all exemplary dimensions, where other dimensions are also contemplated depending on the use and configuration of a device.

In certain variations, a system or device for electromagnetic or magnetic induction therapy may include one or more conductive coils disposed within or along an applicator. The coil may be configured to generate an electromagnetic or magnetic field focused on a target nerve, muscle or other body tissue positioned in proximity to the coil. The system may also include one or more sensors. The sensor may be configured to detect electrical conduction in the target nerve or to detect stimulation of a muscle or other body tissue. The sensor may also detect a muscular response caused by an electrical conduction in a target nerve. The sensor provides feedback about the efficacy of the applied electromagnetic or magnetic induction therapy. Optionally, a user may provide such feedback based on detection by the user, with or without the use of a sensor. The system may also include a controller which is in communication with the sensor. The controller may be adjustable to vary a current through the coil in order to adjust the magnetic field focused upon the target nerve based on feedback from the sensor or

user. The various systems or devices described herein may be utilized with or without a sensor.

A variety of electromagnetic or magnetic induction applicators designed or configured to stimulate various portions of a patient's body for treating various conditions are contemplated herein.

FIG. **31** illustrates a variation of a hand or arm applicator **310**. The hand or arm applicator **310** may be ergonomic or contoured to a hand or arm to be positioned relative to or in proximity to a hand or arm to generate an electromagnetic or magnetic field focused on a target nerve, muscle or other tissue within the hand or arm. Optionally, a hand or arm applicator **310** may be designed to stimulate the entire hand or arm of a patient, for example, where the patient has limited or reduced nerve innervation to those portions of the body.

FIG. **31** also illustrates a variation of a foot, knee or leg applicator **320**. The foot, knee or leg applicator **320** may be ergonomic or contoured to a foot, knee or leg to be positioned relative to or in proximity to a foot, knee or leg to generate an electromagnetic or magnetic field focused on a target nerve, muscle or other tissue within the foot, knee or leg. Optionally, a foot, knee or leg applicator **320** may be designed to stimulate the entire foot, knee or leg of a patient, for example, where the patient has limited or reduced nerve innervation to those portions of the body.

FIG. **32** illustrates a variation of a stand alone back applicator **330**. The back applicator **330** may be ergonomic or contoured to the back or to a specific area of the back to be positioned relative to or in proximity to the back to generate an electromagnetic or magnetic field focused on a target nerve, muscle or other tissue within the back. A back applicator **330** may be aligned along the spine or positionable in proximity to the spine. The back applicator **330** may be utilized to stimulate nerve offshoots, dorsal ganglion, the spinal cord itself or any other nerve in the body, to treat various conditions, for example, to treat atrophy or paralysis.

The back applicator **330** may include several coils, which may be pulsed intermittently. In certain variations, a sensor may be placed on muscle in dermatome to provide feedback to ensure stimulation of the proper dorsal root ganglion or vertebral body. The sensor may provide feedback to channel energy or current to the proper or effective coil in an applicator, e.g., in an applicator having multiple coils.

FIG. **33** shows a system including a corded back applicator **340**, a sensor **342** and a logic controller **344**. Various sensors may be utilized, e.g., a three lead EMG, other EMG electrode, a microneedle electrode, or any sensor for detecting physiologic changes associated with nerve firing and/or muscle contraction. The sensor **342** provides feedback which may be used to monitor and/or control therapy. The sensor **342** may be used to position or optimize therapy in a clinic or home healthcare setting. The applicator **340** may or may not contain a pulse generator and/or logic controller circuitry. FIG. **33** shows the logic controller **344** and pulse generator as a separate unit. The logic controller may optimize therapy and minimize energy usage or overheating based on feedback from sensor **342**. Optionally, the logic controller **344** may be incorporated into an applicator. The logic controller **344**, whether separate from the applicator or incorporated in the applicator, may be controlled based on feedback from the sensor.

FIG. **34** shows a system including a whole back applicator **350**, a sensor **352** and a logic controller **354**. One or more back applicators **350** may be provided. One or more applicators **350** may include automated therapy targeting. The applicators **350** may include multiple coils, which can be fired sequentially to stimulate the entire spine or chain of dorsal root ganglion (with or without user or sensor feedback) for osteoarthritis therapy, back or neck pain therapy, prevention of muscular atrophy and/or nerve recovery after paralysis, stroke, or after suffering other nerve damaging conditions. In one variation, one or more applicators **350** may include multiple coils fired sequentially in order to determine the optimal coil for stimulation based on user or sensor feedback. Once the optimal coil is determined, that coil may be selected and used for the remainder of the therapy. In another variation, one or more applicators may include one or more coils that are slidable, adjustable or movable within the applicator housing. The coils may be moved within the applicator housing to treat a large area and/or to be focused on the optimal treatment zone based on feedback from the user and/or feedback from the sensor.

FIG. **35** shows a variation of a back applicator **360** which may be positioned in proximity to or aligned along a spine. The back applicator **360** may have ergonomic features or may be placed in proximity to a spine or a spine may be positioned in proximity to the applicator **360**. The applicator **360** may include several coils that are pulsed intermittently. As shown in FIG. **35**, the back applicator **360** or focused back applicator may me held on a patient by an ergonomic positioning element **361** (e.g., a belt) and may be fit such the cervical, thoracic, lumbar, sacral and/or lumbosacral curvatures bold the back applicator **360** in the optimal position. The applicator **360** may be located anywhere along the positioning element **361** depending on the individual and area to he stimulated. Optionally, a sensor lead **362** may be placed over musculature or along a nerve excited by activation of the applicator **360**. In one variation, a coil power line **365** for supplying power or current from the logic controller **364** to coils positioned in the applicator **360** may include fluid cooling, e.g., air or liquid cooling.

FIG. **36** shows an applicator **366** designed or configured to generate a magnetic field focused on a target nerve responsible for phantom or neuropathic pain. The applicator **366** or phantom pain therapeutic stimulator unit may be utilized to treat phantom pain or neuropathic pain, to provide phantom pain or neuropathic pain therapy. The applicator **366** may be ergonomic or contoured to be positioned relative to or in proximity to a nerve responsible for phantom or neuropathic pain.

FIG. **37** shows a facial neuralgia applicator **380**. Facial neuralgia applicator **380** may be may be ergonomic or contoured to a face or head to be positioned relative to a face or head to stimulate a nerve responsible for facial neuralgias. The applicator **380** may be designed or configured to be positioned relative to, in proximity to or on a patient's face or head and to generate a magnetic field focused on nerves responsible for facial neuralgias, the trigeminal nerve, to treat facial neuralgia. Optionally, a sensor may be positioned along a facial nerve to ensure adequate therapy and to provide feedback, e.g., to a logic controller, regarding nerve conduction or body stimulation.

In certain variations, an applicator may be designed to ergonomically target common nerves responsible for common neuralgias in order to treat such neuralgias. In other variations, an applicator may be used for treating neuralgias virtually any on a patient's body including in deep nerves due to the ability of magnetic fields generated by the applicator to penetrate painlessly. In certain variations, an applicator may be designed to generate a magnetic field focused on a target nerve to treat central or peripheral neuralgias.

FIG. **38** shows a depression applicator **386** which is designed or configured to be positioned relative to, in proximity to or over a frontal cortex. The applicator **386** may be ergonomic or contoured to a head to be positioned relative to a head to stimulate the frontal cortex. The applicator **386** may, generate an electromagnetic or magnetic field focused on the frontal cortex to treat depression. A sensor may be positioned in the offshoots of the motor cortex. The sensor may provide feedback to ensure appropriate placement of the applicator **386** or coil. In one variation, the applicator **386** may include a therapeutic coil and a targeting coil (e.g., a small non-treatment coil), which may be positioned a certain distance behind the therapeutic coil, e.g., about 5 cm behind the therapeutic coil. When firing of the targeting coil is sensed by the sensor (or user-feedback), the therapeutic coil may be positioned in the correct or optimal position over the frontal cortex for depressive therapy.

FIG. **39** shows a migraine applicator **390** which is designed or configured to be positioned relative to, in proximity to or over an occipital nerve. The applicator **390** may be ergonomic or contoured to a face or head to be positioned relative to a face or head to stimulate the occipital nerve. The applicator **390** may generate an electromagnetic or magnetic field focused on the occipital nerve to halt, prevent or treat migraines. The applicator **390** may have an ergonomic design to ensure appropriate placement over the occipital nerve. In one variation, the applicator **390** may be a single (or few) pulse device. The applicator **390** may be in a portable format. The applicator **390** may also be without any significant cooling features. Optionally, the applicator **390** may have cooling features. In another variation, an applicator may be a multiple pulse, higher frequency device. Such an applicator may include cooling features, where cooling is provided by utilizing liquids or airflow, such as rapid airflow to cool the coils or applicator.

FIG. **40** shows a variation of an applicator **396** in the form of a stimulatory coil platform which may be ergonomic and contoured to, a knee. The applicator **396** is configured to be positioned relative to or in proximity to a knee or the applicator **396** is configured such that a knee may be positioned relative to or in proximity to the applicator **396**. The applicator **396** may be configured to generate an electromagnetic or magnetic field focused on the popliteal nerve for peripheral nerve stimulation to treat various conditions, e.g., overactive bladder, neuropathic pain or restless legs. In one variation, a stimulatory coil may target an area behind a patient's knee or the popliteal fossa, and the knee may be rested on a stimulatory coil platform applicator in any position.

In certain variations, an applicator may include one or two (bilateral) magnetic field generating coils, which may be positioned around the knee when the patient is in a sitting, standing or prostrate position. In certain variations, a pulse generator or logic controller **397** may send energy through one or more coils to create art electromagnetic or magnetic field. The applicator or coils may generate stimulatory or non-stimulatory fields. Sensor or user feedback may provide feedback to logic controller to optimize therapy, e.g., with the stimulatory fields. An applicator may be utilized for generating magnetic fields focused on an area of a patient's body, e.g., the knee, to treat various orthopedic indications, e.g., knee pain or osteoarthritis. An applicator may be utilized for generating magnetic fields focused on a area of a patient's body to treat various non-orthopedic indications, via, e.g. peripheral nerve stimulation.

FIGS. **30**A-**30**B, show a variation of an applicator **400** which may be utilized for popliteal nerve stimulation and/or treatment of the knee. The applicator may be designed or configured to generate an electromagnetic or magnetic field focused on the popliteal nerve for popliteal nerve stimulation or on the knee for treating osteoarthritis. The applicator is configured to be positioned relative to or in proximity to a knee or the applicator is configured such that a knee may be positioned relative to or in proximity to the applicator. A leg may rest on the applicator coil or be positioned above it. Optionally, as shown in FIG. **30**B, a foot rest **104** may be provided for holding up a foot.

FIG. **41** shows a system including a variation of an ergonomic hack applicator **410** held on a patient's body by an ergonomic positioning element **411** in the form of a shoulder harness. A sensor **412**, and a logic controller **414** are also provided. The applicator **410** may include various positioning elements **411**, e.g., a shoulder harness, an upper torso garment, or an ergonomic hack-countered plate. The applicator **410** may be stimulatory or non-stimulatory. In another variation, an applicator may be rested on a seat or chair such that a stimulatory coil reliably overlies the area of the patient's body requiring stimulation. In certain variations, one or more coils may be fixed on the applicator (requiring prior targeting by a healthcare provider or patient) or one or more coils may move freely within or along the applicator and may be locked into position when the desired or optimal position is located. Coils may also move automatically in order to optimize targeting of the coil based on sensor or user feedback. The system may be incorporated into a single unit or, as illustrated, have at least two components including a separate logic controller.

For any of the applicators described herein, such applicators may include one or more of the following features. The applicators may be ergonomic or contoured to the specific region of the body or anatomy to which the applicator will be delivering stimulation. The applicators may be configured or designed to be positioned relative to, on, around, or in proximity to a specific region of the body or the applicators may be configured or designed such that the targeted region of the body may be positioned relative to, on, around or in proximity to the applicator. The applicators may be openable or adjustable to allow for insertion or entrance of the targeted body part or anatomy into the applicator or to allow for placement of the applicator onto or around the targeted body part or anatomy. The applicators may be flexible or ergonomic to accommodate nearly any type of body habitus. In certain variations, a solenoid-type coil may incorporated into an applicator for delivering PEMF stimulation directly to the targeted areas or regions of a body. In certain variations, any of the applicators described herein may approximate the respective targeted body area or anatomy or the applicators may be designed such that the body region or targeted anatomy may approximate the applicator.

In certain variations, any of the applicators or systems described herein may be used to provide electromagnetic or magnetic induction therapy with or without a sensor.

In certain variations, electromagnetic stimulating devices or applicators for providing stimulation to tissues of the human body, including nerves, muscles (including superficial and deep muscles), and/or other body tissues for the treatment of various conditions, including, e.g., chronic and acute pain, are provided.

The devices may utilize an inductive coil encased within an ergonomic, body-contoured applicator to target specific regions of the body. The coils may be designed to target

peripheral nerves throughout the body that have been implicated or involved in pain syndromes.

The various designs and configuration of the devices described herein allow for easier application, more consistent therapy and home use while targeting anatomic regions with therapeutic pulsed electromagnetic fields. The fields may also be delivered or applied in an intermittent manner to allow for convenience and ease of use while providing a durable benefit. With intermittent external stimulation by pulsed electromagnetic or magnetic fields, a nerve or other tissues may be stimulated in manner that provides a continued and lasting effect on nerve, muscle or tissue function, without habituation.

The electromagnetic or magnetic induction stimulation devices described herein substantially improve the state of the art electromagnetic stimulation technology and may incorporate the delivery of PEMF therapy into a user friendly, body contoured applicator. In certain variations, a delivery system for PEMF therapy may include elements such as, e.g., (1) an ergonomic, body contoured applicator which provides for repetitive application and consistent therapy onto the same body area. The applicator may be coded with clear markings to facilitate repetitive and consistent therapy onto the same body area; (2) the use of a sensor to provide feedback that stimulation is occurring effectively; and/or (3) the use of intermittent stimulation to effectively treat various conditions, e.g., chronic pain, without habituation. These elements individually or the various combinations of these elements have provided for an easy to use, ergonomically designed system that has applications within a host of clinical and home ease of use health applications.

In certain variations, an electromagnetic or magnetic induction stimulation device able to provide stimulation to tissues of the human body, including nerves, muscles (including superficial and deep muscles), and/or other body tissues without significant discomfort to the patient is provided. Conductive stimulating coils may be encased in an ergonomic, body-contoured applicator that is coded with clear markings to provide for repetitive application and consistent therapy onto the same body area. The design of the applicator allows for ease of use and also for the targeting of anatomic regions to be exposed to the impulses of the PEMFs. The electromagnetic stimulating device may provide PEMF in a manner that is patient user friendly and the device may he portable. The device may he utilized in a hospital, an outpatient clinic, a therapist's office, or at a patient's home.

In certain variations, an electromagnetic or magnetic induction stimulation device may stimulate regions of the body to treat conditions requiring both maximal stimulation (i.e., sufficient to cause contraction of muscle fibers and firing of nerves) as well as submaximal stimulation (which will be sufficient to provide therapy but not to cause contraction of muscle fibers).

The electromagnetic or magnetic induction or stimulating devices described herein may be utilized for various indications. The indications may be divided into maximal and submaximal categories, in which the former requires significantly higher levels of inducting current than the latter. The maximal applications of the device include, but are not limited to: Non-invasive stimulation (intermittent or continuous) of the peripheral nervous system for treating chronic pain, stimulation of a nerve for the up- or down-regulation of hormones or cellular proliferation; treatment and/or prevention of atrophy, which would be therapeutic during recovery after an individual sustains a fracture, experiences paralysis of a limb or other body part, or undergoes surgery, such as ACL repair in the knee; treatment of neurogenic or overactive bladder and bowel; and stimulation of the central nervous system to alter neural pathways or up/down-regulate the aforementioned factors.

Additional applications of the devices include hut are not limited to; treatment of neuropathic pain (e.g., phantom pain in limbs or other neurologic pain) or orthopedic pain (back and neck pain or skeletal related pain); treatment of overactive bladder and bowel; and treatment of arthritis and/or orthopedic conditions.

In certain variations, a device is provided for delivering PEMF stimulation to selective anatomic regions of the body, utilizing an ergonomic applicator designed to facilitate accurate and targeted delivery of therapy. The applicator may be coded with clear or solid markings to provide for repetitive application and consistent therapy onto the same body area of the body. This design may facilitate the placement of the device for the stimulation of key nerves, muscles, and/or body tissues.

In certain variations, a device is provided which may he utilized to electromagnetically stimulate selective nerves, muscles, and/or body tissues, where the device is user friendly and capable of being used even by an unskilled patient in a home healthcare setting.

In certain variations, a device is provided to electromagnetically stimulate selective nerves, muscles, and body tissues to provide consistent therapy, with an ergonomic applicator targeting key nerves and eliminating the requirement for a highly trained operator to manipulate the device.

In certain variations, an electromagnetic or magnetic induction system or device may be configured or designed to provide intermittently applied pulsed magnetic fields in the treatment of chronic conditions, such as pain. For example, a device as described herein may provide shorter, intermittent stimulation to treat chronic pain or other chronic conditions. The delivery of pulsed magnetic fields may have a continued and lasting effect on nerve function in treating conditions, such as, overactive bladder as well as other chronic neurological and orthopedic conditions such as neuropathic pain restless legs and orthopedic pain (e.g., spinal pain, back pain, etc.)

In certain variations, intermittent pulsed magnetic fields may be utilized for the treatment of chronic and acute non-orthopedic conditions such as neuropathic pain, phantom pain and chronic neuralgias, as well chronic and acute orthopedic conditions, such as back pain and neck pain. The therapeutic magnetic fields may he applied frequently (e.g., several times a day) or less frequently (e.g., once a week or once a month) depending on the durability of the effect for the individual patient. Treatment involving the use of magnetic fields does not require surgery or needles to stimulate a nerve. Also, the deliver of intermittent pulsed magnetic fields prevents the nerve from becoming habituated to the stimulator signal by ensuring that there are periods during which the nerve is not subjected to the stimulatory signal. Accordingly, the electromagnetic or magnetic induction systems or devices described herein may provide unparalleled ease of use, non-invasiveness, reliability of therapy based on sensor feedback and/or ergonomic targeting, and/or a lack of habituation due to intermittent stimulation provided by certain systems and devices.

In certain variations, the electromagnetic or magnetic induction systems or devices described herein may incorporate an air-cooled coil wherein the air coolant, e.g., liquid or air, is drawn through and/or in between the turns of the inductive coil, in direct contact with conductive surfaces of

the coil. Drawing air or other fluid through the coil prevents the coil from heating up to the degree that could damage the coil and the electronics of a device, or expose the patient to excessive temperatures.

In certain variations, the systems and devices described therein may be utilized to stimulate nerves for a variety of conditions, including, e.g., atrophy prevention, nerve repair/regeneration, neuromodulation, chronic pain, up or down regulation of hormones, restless legs, phantom pain, etc. The systems and devices may also be used to stimulate muscles and/or other body tissues to accelerate tissue healing, regeneration and/or growth.

In certain variations, the electromagnetic or magnetic induction systems or devices described herein and other implantable or extracorporeal devices may allow for the automatic adjusting of nerve stimulation based on feedback.

In one variation, extracorporeal or implantable device, e.g., any of the electromagnetic or magnetic induction devices described herein, a pacemaker, defibrillator, or nerve stimulator, may include a feature that allows for automatic adjustment of nerve stimulation based on feedback provided by a sensor or user. This feature may minimize pain and power usage while ensuring optimal therapy delivery. A device may include a stimulator and a sensing component. The stimulator may be automatically adjustable based on feedback from the sensor up to a maximal (safe) threshold. Each therapy may start with lower powered pulses, followed by increasing power pulses until the sensor detects stimulation. The algorithm allows for the minimal amount of power to be used and allows for automatic adjustment of power settings as conditions change.

In one variation, an implantable device may include a sensor, such that the device can stimulate tissue or nerves and sense stimulation at the same site. For example, the sensor may provide feedback to the implantable device regarding nerve conduction at the site of stimulation. As fibroses develops around an implant, at the site of stimulation, the feedback will indicate whether a target nerve is no longer being effectively stimulated due to the fibroses, which will cause the power or level of stimulation to increase or decrease, as is necessary, to effectively stimulate the target site and overcome any obstruction due to fibroses. As fibroses occurs around an implant, a patient need not report back to a physician or other operator for adjustment of the stimulatory power of the device. The device will automatically adjust the stimulatory power or level based on sensing stimulation of the target nerve or tissue.

This eliminate the guesswork involved by the user in monitoring their therapy one day at a time on their own, as they notice the effect of the therapy wear off. This also eliminates the risk of the user being exposed to unnecessarily high power levels that might otherwise by set in order to minimize frequent return visits to a physician or operator for adjustments.

FIGS. **42**A and **42** show an example of how the amount of stimulatory power required to achieve a desired stimulus may be automatically adjusted as a result of fibroses, according to the above described feature. According to FIG. **42**A, after the initial implant of the device, the level of stimulatory power is increased until stimulation of the target nerve or tissue is sensed (indicated by square box at, e.g., about 10 mV). An effective stimulatory therapy may then be delivered. According to FIG. **42**B, after fibroses sets in, in order to maintain the desired level of stimulation to provide an effective stimulatory therapy, the level of stimulatory power is increased until stimulation of the target nerve or tissue is sensed (indicated by square box, e.g., at 20 mV) According to the example in FIG. **42**B, the presence of fibroses required an increase in the stimulatory power level to deliver an effective stimulatory therapy.

The automatic adjustment feature based on sensor feedback may be utilized in any stimulator or non-stimulatory implant or extracorporeal device, where the device incorporates a sensor capable of detecting the desired stimulus and a feedback loop capable of automatically adjusting parameters (e.g., power, frequency, etc.) to ensure appropriate stimulation.

In certain variations, the electromagnetic or magnetic induction systems or devices described herein and other implantable or extracorporeal devices may include a feature that allows for automatic targeting of coils.)

A device may include multiple inductive coils or one or more movable inductive coils. The device may also include a sensor based feedback algorithm. In one variation, the device includes a targeting or movable coil which may be positioned over or in proximity to a patient's body at a site that elicits a response that can be sensed automatically or detected by a user. Once this response is detected, the coil may either move to its stimulation position, or in the event that a small targeting coil is used, the therapeutic coil may already overlie the treatment area. Once the response is detected, the therapy may automatically begin.

In one example, relating to the treatment of depression, the motor cortex is stimulated until the thumb is seen to move. The coil may then be advanced, e.g., about 5 cm, to about 5 inches, forward to a position over the frontal cortex. This feature eliminates the guesswork that may otherwise be involved in moving or positioning a coil, and automates therapy based on user feedback or EMG senor or other sensor feedback, e.g., over a thumb.

FIG. **43**A shows an example of a device **420** positioned on a skull. The device includes a treatment coil **422** and a targeting coil **423**. The treatment coil **422** may be positioned by EMG detection with targeting coil **423** stimulation, where the targeting coil may not move.

In another variation shown in FIG. **43**B, art ergonomic fixture or applicator **430** (e.g., a helmet) may be worn and a coil **432** positioned on the applicator may slide or move from its targeting position to its therapeutic position automatically or by user intervention.

The feature that allows for automatic targeting of coils may be utilized in any device designed to stimulate nerve, body or other tissues with stimulatory or sub-stimulatory fields in which the device may be targeted based on a detectable signal or response.

Other conditions that may be treated utilizing the various electromagnetic or magnetic induction stimulation systems and methods described herein include but are not limited to: pelvic pain, interstitial cystitis, fibromyalgia, chronic fatigue and preterm labor, pain syndromes, Irritable Bowel Syndrome, Vulvodynia, Herpetitic neuralgia, trigeminal neuralgia and Myofascial pain.

## EXAMPLES

The following Examples are provided for illustration, not limitation. One with Skill in the art would be able to use these examples as guidelines for making and using comparable devices.

In each example, intermittent therapy should be applied and symptoms/scores tracked for a minimum of 6 weeks in order to determine the full extent of the therapies effect.

Example 1

Empirical Testing of Efficacy in the Treatment of Neuropathic Pain

The optimal stimulus intensity for neuropathic pain treatment; the optimal application parameters, i.e., frequency of stimulation, duration of treatment, location of stimulatory coils in each disposable array of coils; and the optimal coil diameter/placement within the strays can be determined using the following experimental protocol: Before, during and after treatment, patients will report scores of neuropathic pain after weekly stimulation over a minimum of 6 weeks.

Example 2

Empirical Testing of Efficacy in the Treatment of Neuromuscular Pain

The efficacy of neuromuscular pain treatment can be tested by monitoring patient reported pain scores. A standardized scale may be utilized and, when feasible, local biopsy and blood tests can be useful in determining the impact of the therapeutic fields on circulating factors and local mediators. The optimal pulse amplitude, duration site of stimulation will be assessed based on reported pain scores and diagnostic tests.

Example 3

Empirical Testing of Efficacy in the Treatment of Orthopedic Conditions (i.e., Arthritis, Back Pain and Neck Pain)

The efficacy of arthritis treatment can be tested by monitoring patient reported functionality scores. A standardized subjective functionality scale may be utilized and, when feasible, local biopsy may be useful in determining the impact of the therapeutic fields on the cartilage and arthritic regions treated. As cartilage destruction is a well-studied side-effect of arthritis, reduction of this degeneration will be a valuable marker for efficacy of therapeutic treatments. The optimal pulse amplitude, duration, site of stimulation will be assessed based on reported functionality scores and diagnostic tests. Pain scores may also be measured to determine the device's impact on orthopedic conditions such as back pain, neck pain, etc. A standardized pain scale may be used before and after treatment to determine potential benefit.

It is also contemplated that any of the energy emitting systems or devices described herein can be used with or without a sensor for detecting conduction of a stimulated nerve or muscle of tissue stimulation resulting from the electromagnetic or magnetic field generated by the conductive coil and delivered to a patient or an electrical stimulus delivered to a patient. Also, in any of the above variations, a controller may optionally be connected, coupled, integral to or otherwise in communication with the conductive coils ardor the sensor. Optionally, the sensor may be connected, coupled, integral to or otherwise in communication with the conductive coil.

Each of the individual variations described and illustrated herein has discrete components and features which may be readily separated from or combined with the features of any of the other variations. Modifications may be made to adapt a particular situation, material, composition of matter, process, process act(s) or step(s) to the objective(s, spirit or scope of the present invention.

Methods recited herein may be carried out in any order of the recited events which is logically possible, as well as the recited order of events. Furthermore, where a range of values is provided, every intervening value between the upper and lower limit of that range and any other stated or intervening value in that stated range is encompassed within the invention. Also, any optional feature of the inventive variations described may be set forth and claimed independently, or in combination with any one or more of the features described herein.

All existing subject matter mentioned herein (e.g. publications, patents, patent applications and hardware) is incorporated by reference herein in its entirety except insofar as the subject matter may conflict with that of the present invention (in which case what is present herein shall prevail). The referenced items are provided solely for their disclosure prior to the filing date of the present application. Nothing herein is to be construed as an admission that the present invention is not entitled to antedate such material by virtue of prior invention.

Reference to a singular item, includes the possibility that there are plural of the same items present. More specifically, as used herein and in the appended claims, the singular forms "a," "an," "said" and "the include plural referents unless the context clearly dictates otherwise. It is further noted that the claims may be drafted to exclude any optional element. As such, this statement is intended to serve as antecedent basis for use of such exclusive terminology as "solely," "only" and the like in connection with the recitation of claim elements, or use of a "negative" limitation. Unless defined otherwise, all technical and scientific terms used herein have the same meaning as commonly understood by one of ordinary skill in the art to which this invention belongs.

This disclosure is not intended to be limited to the scope of the particular forms set forth, but is intended to cover alternatives, modifications, and equivalents of the variations described herein. Further, the scope of the disclosure fully encompasses other variations that may become obvious to those skilled in the art in view of this disclosure. The scope of the present invention is limited only by the appended claims.

What is claimed is:

**1**. A method of treating overactive bladder or incontinence, comprising:

non-invasively positioning a first portion of a patient's body relative to an electrical stimulator such that a branch of a posterior tibial nerve within the first portion of the body is directly targeted by the electrical stimulator;

passing a current through the electrical stimulator; and

delivering an electrical stimulus from the electrical stimulator to the branch of the posterior tibial nerve such that the branch directly receives the electrical stimulation to treat overactive bladder or incontinence.

**2**. The method of claim **1**, wherein non-invasively positioning comprises positioning an electrode patch in communication with the electrical stimulator upon a foot of the patient.

**3**. The method of claim **1**, further comprising detecting a muscular response caused by an electrical conduction or stimulation of the branch of the posterior tibial nerve.

**4**. The method of claim **1**, wherein delivering the electrical stimulus comprises activating the electrical stimulator for a duration of about 30 minutes per week to treat the patient.

**5**. The method of claim **1** further comprising displaying physiological parameters detected from the patient.

**6**. The method of claim **1** further comprising detecting for a lack of presence of electrical conduction at a second portion of the patient's body distant from the first portion as an indicator of electrode migration from the first portion.

**7**. The method of claim **6** wherein detecting for the presence of electrical conduction comprises detecting via an electrode patch positioned upon the second portion.

**8**. The method of claim **1** further comprising detecting for a lack of presence of electrical conduction at a second portion of the patient's body distant from the first portion as an indicator of electrode malfunction from the first portion.

**9**. The method of claim **8** wherein detecting for the presence of electrical conduction comprises detecting via an electrode patch positioned upon the second portion.

**10**. The method of claim **1** further comprising detecting for a lack of presence of electrical conduction at a second portion of the patient's body distant from the first portion as an indicator of proper electrode placement upon the first portion.

**11**. The method of claim **10** wherein detecting for the presence of electrical conduction comprises detecting via an electrode patch positioned upon the second portion.

**12**. The method of claim **1** further comprising detecting for a lack of presence of electrical conduction through tissue at a second portion of the patient's body distant from the first portion as an indicator of electrode placement upon the first portion.

**13**. The method of claim **12** wherein detecting for the presence of electrical conduction through tissue comprises detecting via an electrode patch positioned upon the second portion.

* * * * *