US007801603B2

(12) **United States Patent**
Westlund et al.

(10) **Patent No.: US 7,801,603 B2**
(45) **Date of Patent: Sep. 21, 2010**

(54) **METHOD AND APPARATUS FOR OPTIMIZING VAGAL NERVE STIMULATION USING LARYNGEAL ACTIVITY**

(75) Inventors: **Randy Westlund**, River Falls, WI (US); **Anthony V. Caparso**, St. Louis Park, MN (US); **Mark Bly**, Falcon Heights, MN (US)

(73) Assignee: **Cardiac Pacemakers, Inc.**, St. Paul, MN (US)

(*) Notice: Subject to any disclaimer, the term of this patent is extended or adjusted under 35 U.S.C. 154(b) by 1032 days.

(21) Appl. No.: **11/469,551**

(22) Filed: **Sep. 1, 2006**

(65) **Prior Publication Data**

US 2008/0058874 A1 Mar. 6, 2008

(51) **Int. Cl.**
A61N 1/36 (2006.01)

(52) **U.S. Cl.** **607/2**; 607/46

(58) **Field of Classification Search** 600/23; 607/41, 47, 72, 1, 46
See application file for complete search history.

(56) **References Cited**

U.S. PATENT DOCUMENTS

4,817,628 A 4/1989 Zealear et al.
5,111,814 A * 5/1992 Goldfarb 607/48
5,263,491 A * 11/1993 Thornton 600/587
5,275,159 A 1/1994 Griebel
5,590,241 A 12/1996 Park et al.
5,865,759 A 2/1999 Koblanski
6,721,603 B2 * 4/2004 Zabara et al. 607/46
7,069,082 B2 * 6/2006 Lindenthaler 607/41
2002/0169485 A1 11/2002 Pless et al.
2003/0149457 A1 8/2003 Tcheng et al.
2005/0010265 A1 1/2005 Baru et al.
2005/0107843 A1 5/2005 McDermott et al.

FOREIGN PATENT DOCUMENTS

WO WO-2008030348 A1 3/2008

OTHER PUBLICATIONS

PCT Application No. PCT/US2007/018696, International Search Report mailed Jan. 21, 2008, 4 pgs.
PCT Application No. PCT/US2007/018696, Written Opinion mailed Jan. 21, 2008, 7 pgs.
"European Application Serial No. 07837286.9", Office Action mailed Sep. 29, 2009, 2 pgs.

* cited by examiner

Primary Examiner—Carl H Layno
Assistant Examiner—Brian T Gedeon
(74) *Attorney, Agent, or Firm*—Schwegman, Lundberg & Woessner, P.A.

(57) **ABSTRACT**

A neural stimulation system delivers neural stimulation to the vagus nerve and senses a signal indicative of laryngeal activity resulting from the neural stimulation. The signal indicative of laryngeal activity is used, for example, to guide electrode placement, determine stimulation threshold, detect lead/electrode problems, detect neural injury, and monitor healing processing following the electrode placement inside the body of a patient.

39 Claims, 12 Drawing Sheets

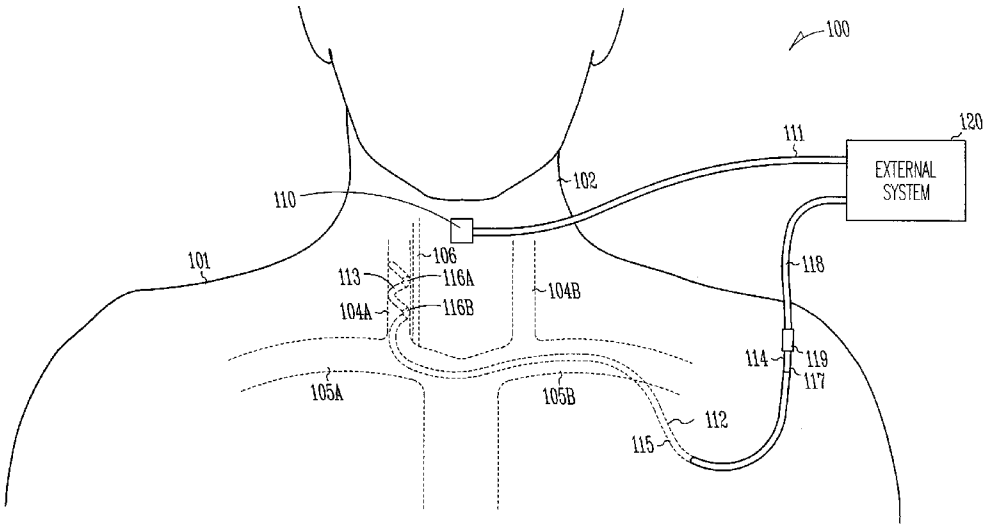

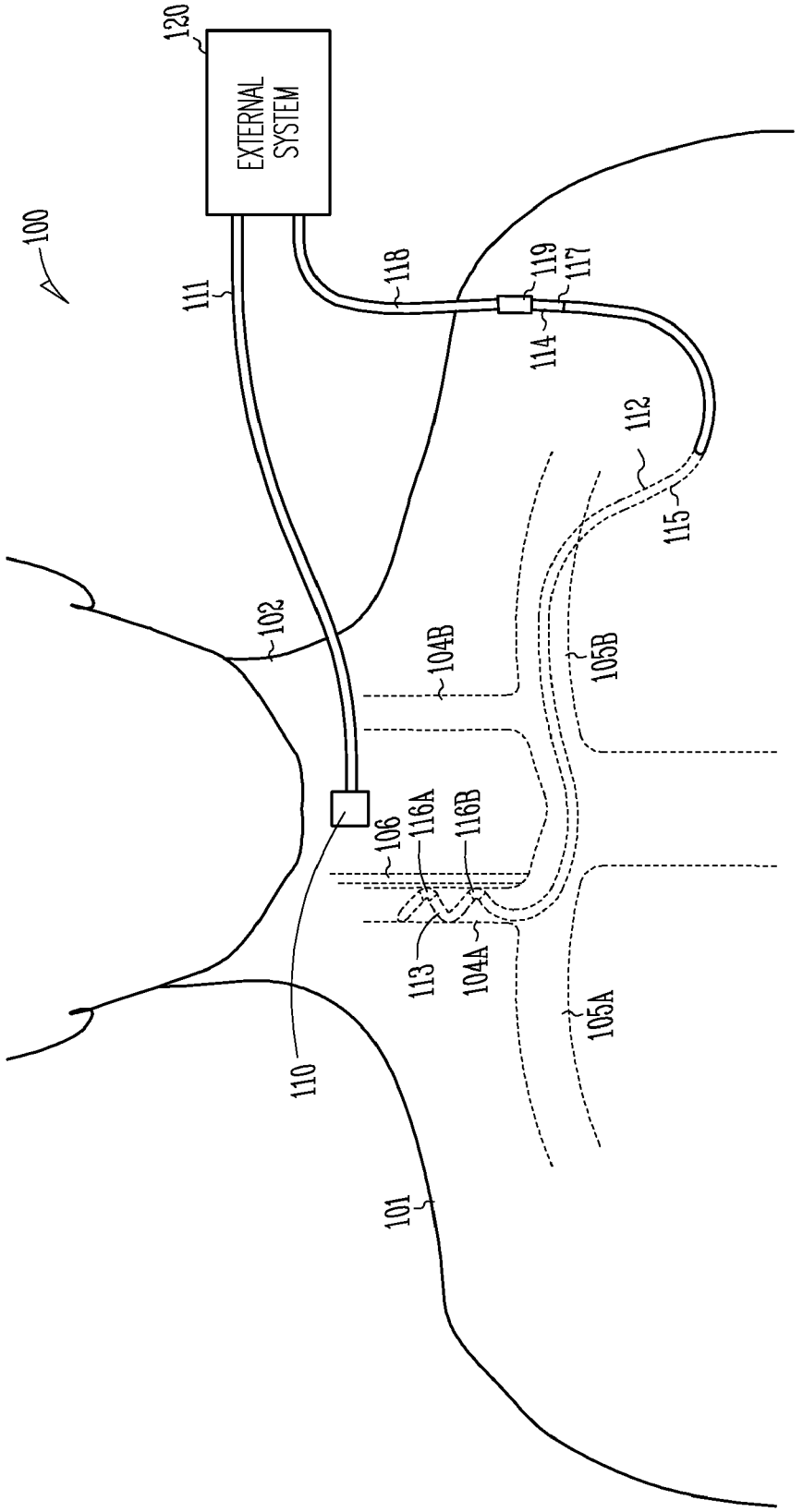
EXTERNAL SYSTEM
120
100
111
118
119
117
114
112
115
102
104B
105B
106
116A
116B
113
104A
105A
110
101

Fig. 1

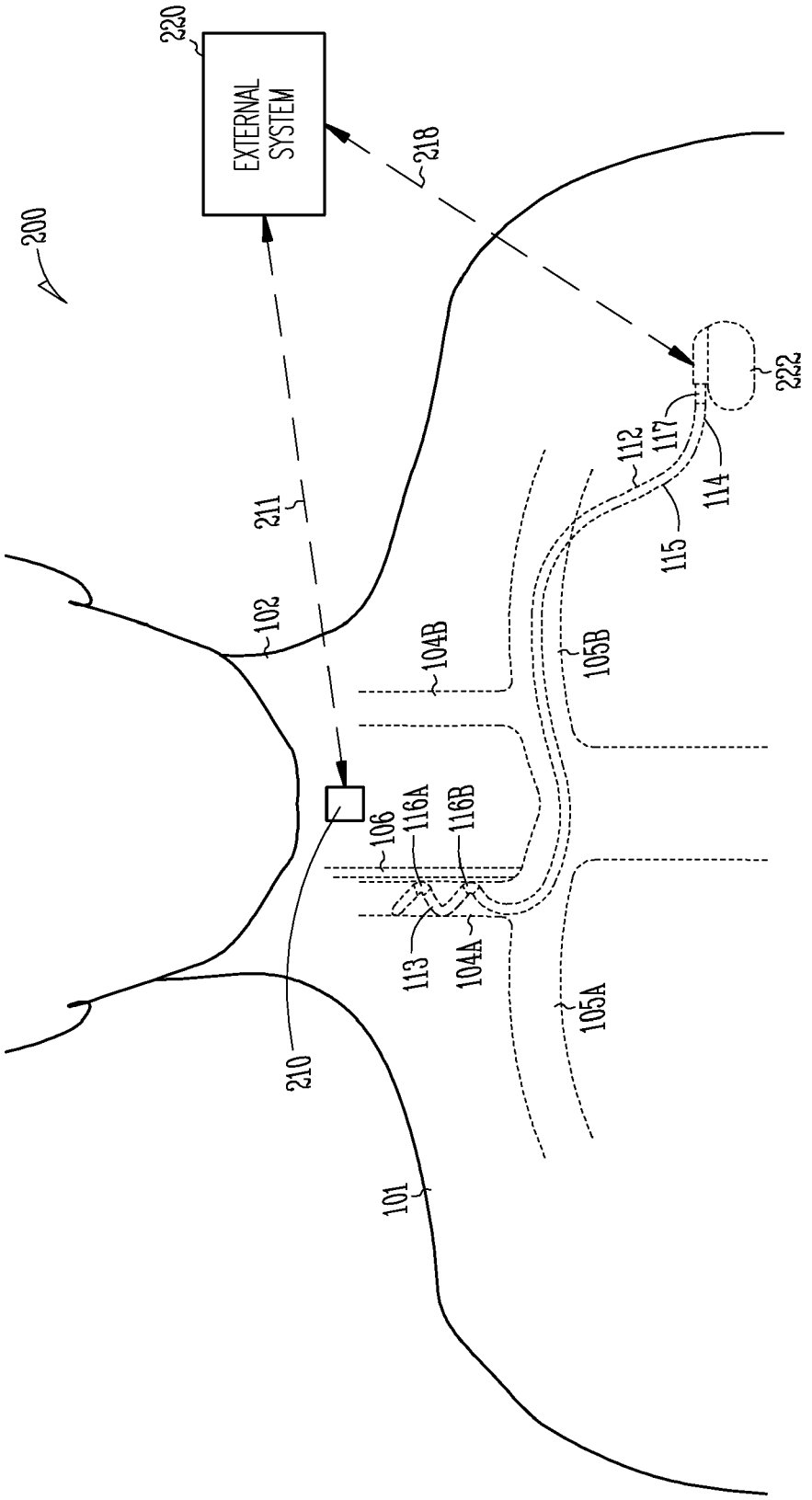
200
220
EXTERNAL SYSTEM
218
222
211
102
112
117
114
115
104B
105B
106
116A
116B
113
104A
105A
210
101

Fig. 2

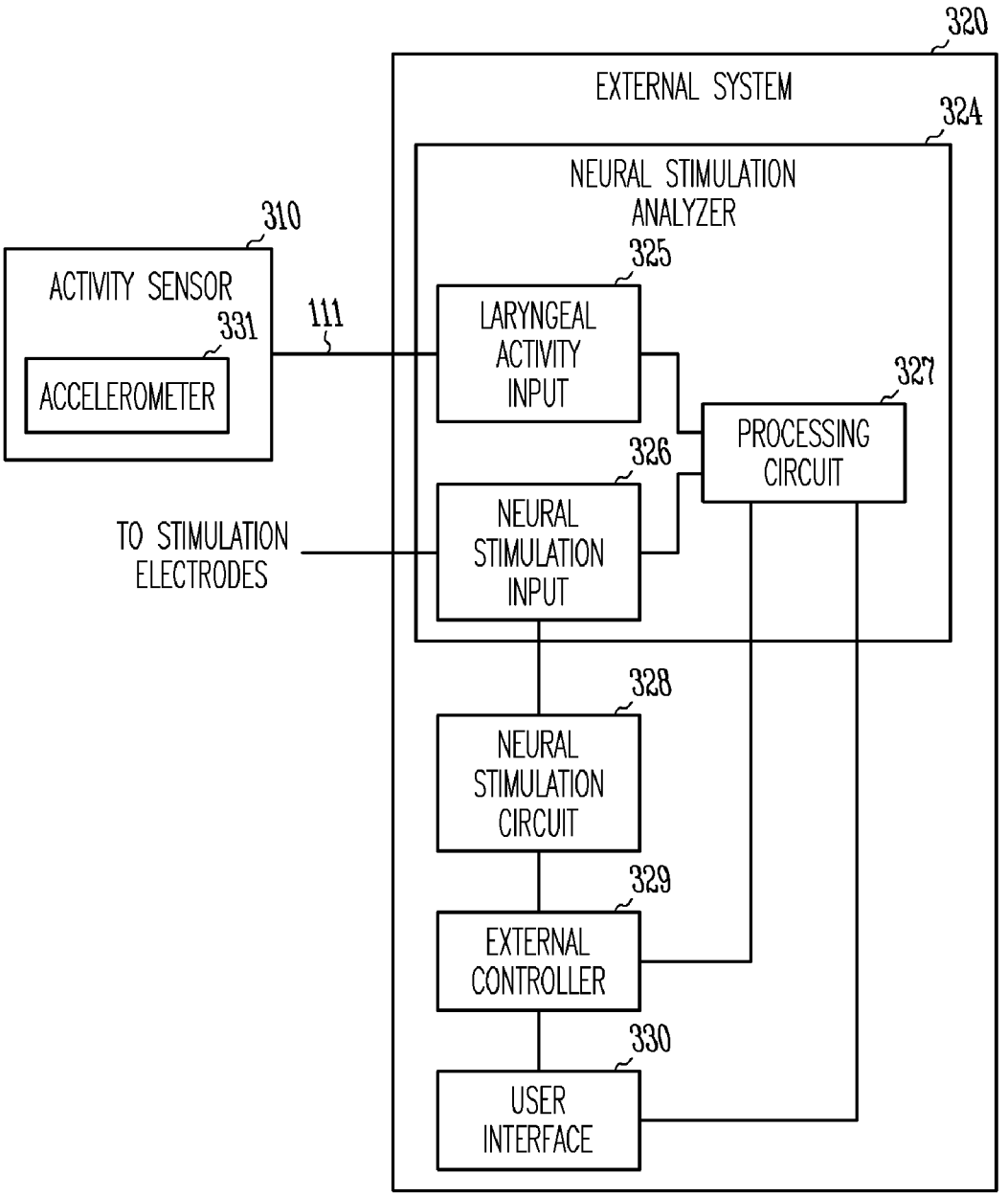
320
EXTERNAL SYSTEM
324
NEURAL STIMULATION ANALYZER
310
ACTIVITY SENSOR
331
ACCELEROMETER
111
325
LARYNGEAL ACTIVITY INPUT
327
PROCESSING CIRCUIT
326
NEURAL STIMULATION INPUT
TO STIMULATION ELECTRODES
328
NEURAL STIMULATION CIRCUIT
329
EXTERNAL CONTROLLER
330
USER INTERFACE

Fig. 3

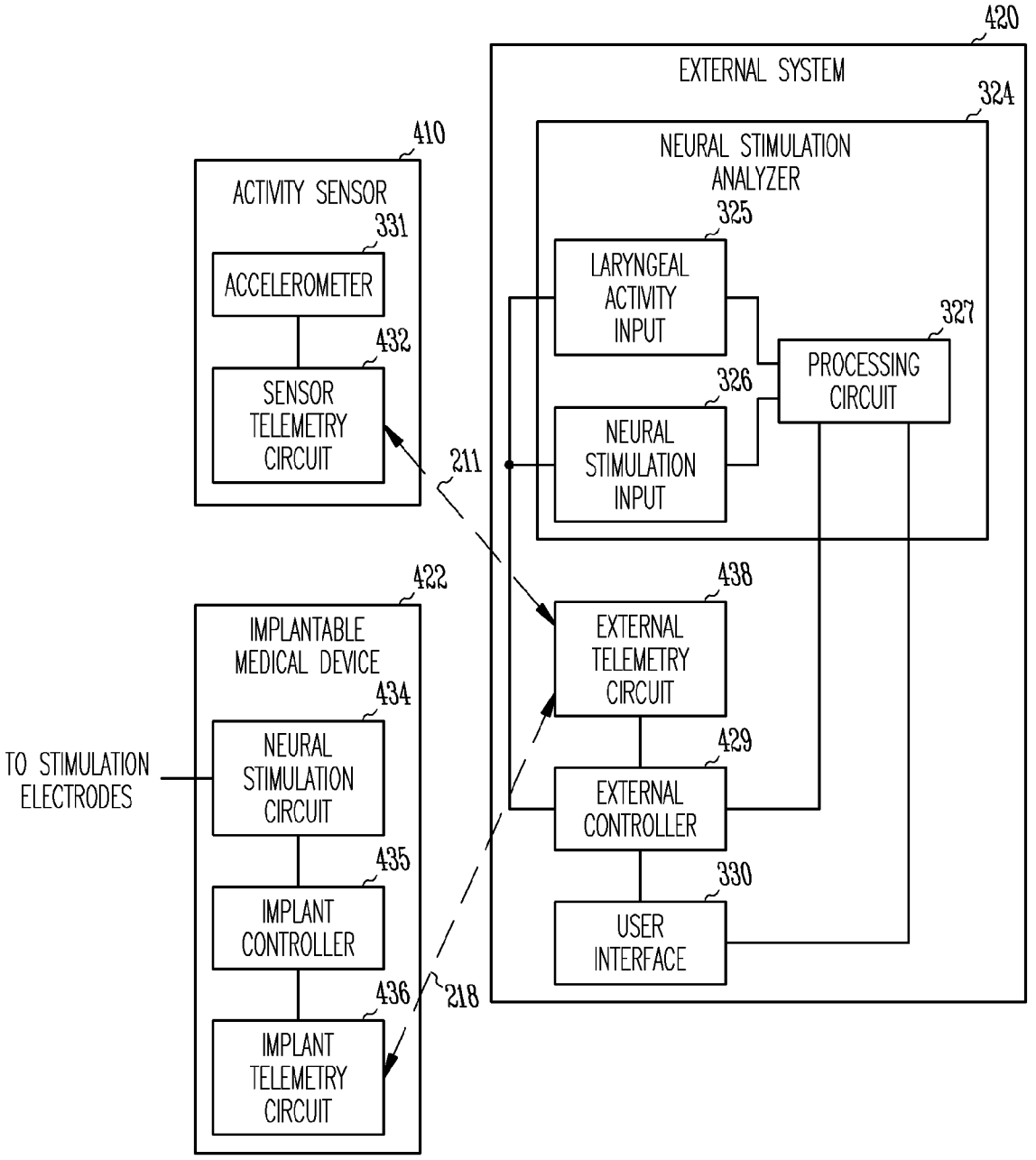
420
EXTERNAL SYSTEM
324
NEURAL STIMULATION ANALYZER
325
LARYNGEAL ACTIVITY INPUT
327
PROCESSING CIRCUIT
326
NEURAL STIMULATION INPUT
410
ACTIVITY SENSOR
331
ACCELEROMETER
432
SENSOR TELEMETRY CIRCUIT
211
438
EXTERNAL TELEMETRY CIRCUIT
429
EXTERNAL CONTROLLER
330
USER INTERFACE
422
IMPLANTABLE MEDICAL DEVICE
434
NEURAL STIMULATION CIRCUIT
TO STIMULATION ELECTRODES
435
IMPLANT CONTROLLER
436
IMPLANT TELEMETRY CIRCUIT
218

Fig. 4

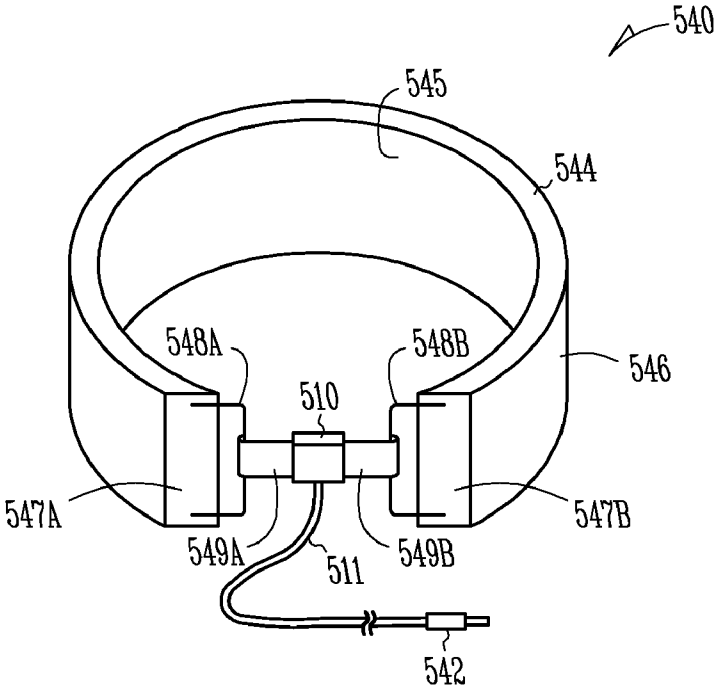
540
545
544
548A
548B
546
510
547A
547B
549A
549B
511
542

Fig. 5

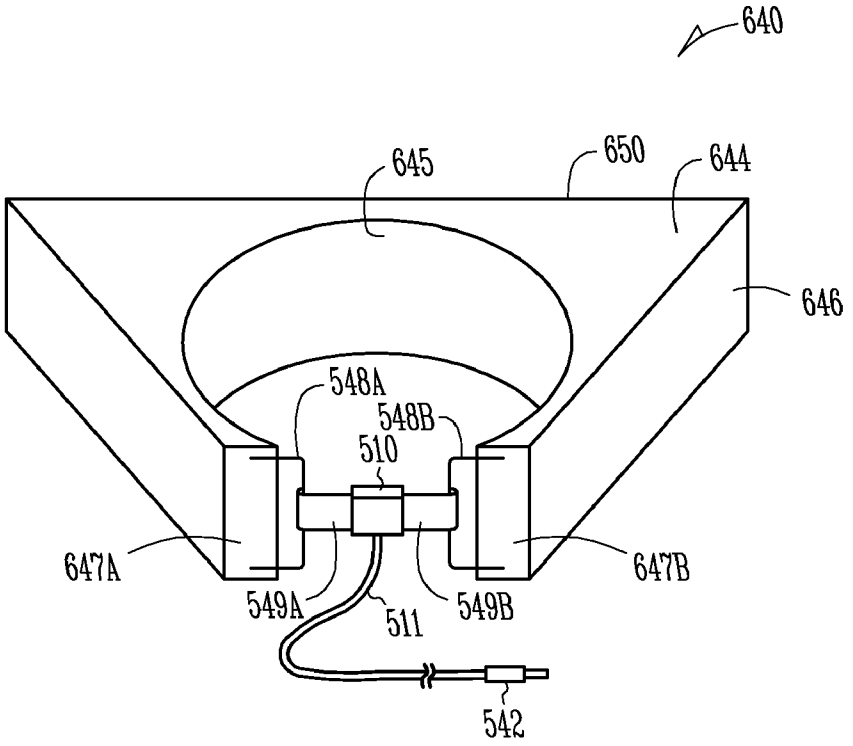
640
645
650
644
646
548A
548B
510
647A
647B
549A
549B
511
542

Fig. 6

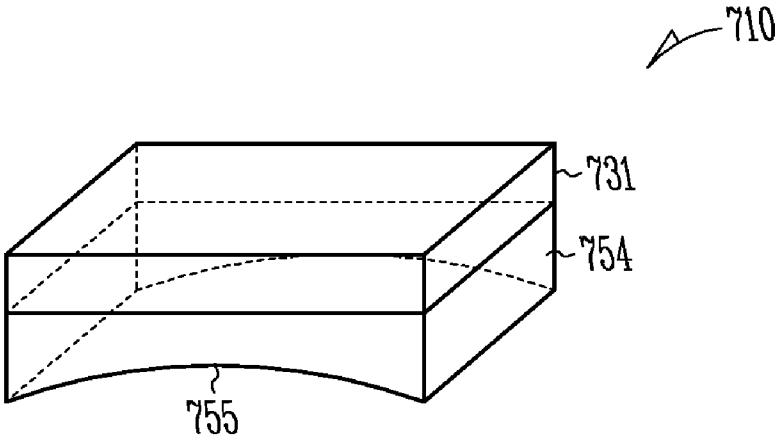

Fig. 7

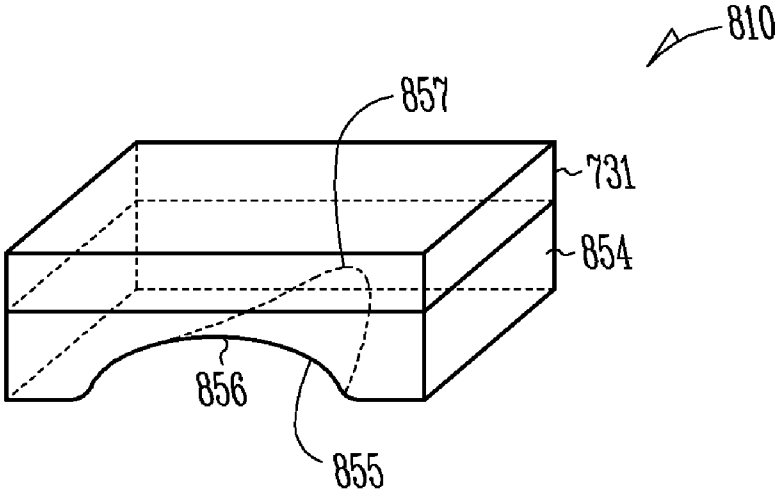

Fig. 8

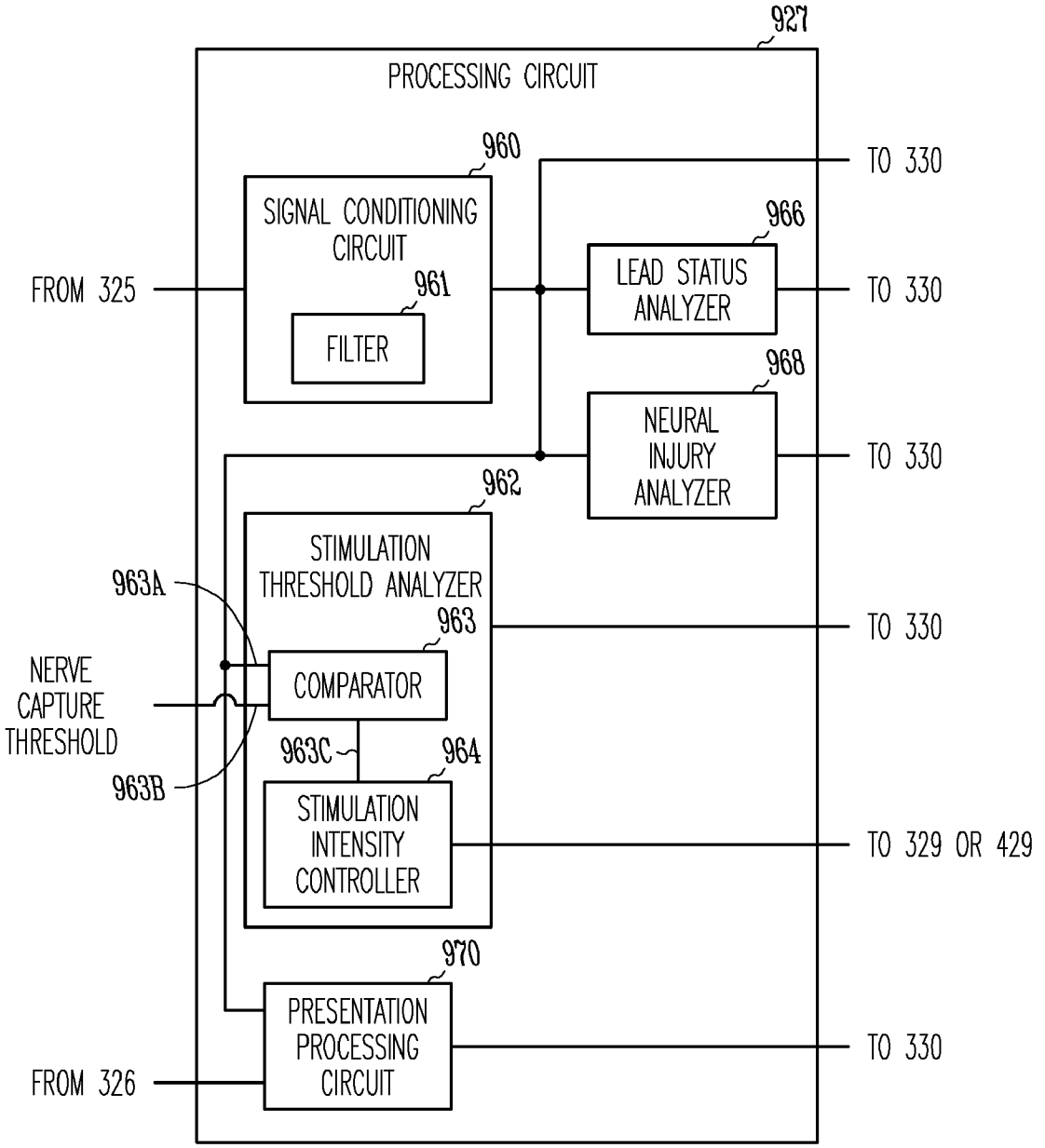
927
PROCESSING CIRCUIT
960
SIGNAL CONDITIONING CIRCUIT
961
FILTER
FROM 325
966
LEAD STATUS ANALYZER
968
NEURAL INJURY ANALYZER
TO 330
TO 330
TO 330
962
STIMULATION THRESHOLD ANALYZER
963
COMPARATOR
963A
963B
963C
964
STIMULATION INTENSITY CONTROLLER
NERVE CAPTURE THRESHOLD
TO 330
TO 329 OR 429
970
PRESENTATION PROCESSING CIRCUIT
FROM 326
TO 330

Fig. 9

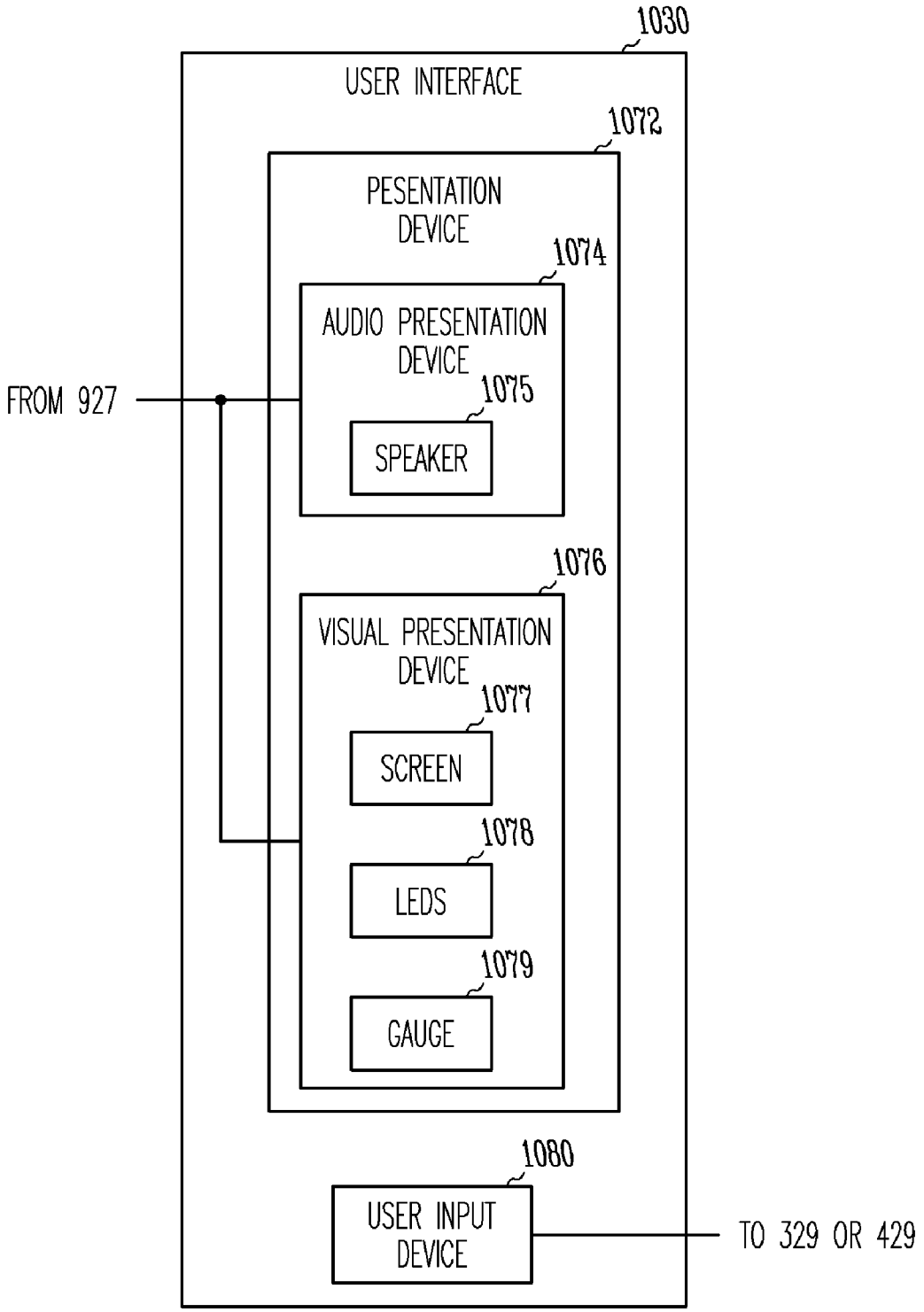
1030
USER INTERFACE
1072
PESENTATION DEVICE
1074
AUDIO PRESENTATION DEVICE
1075
SPEAKER
FROM 927
1076
VISUAL PRESENTATION DEVICE
1077
SCREEN
1078
LEDS
1079
GAUGE
1080
USER INPUT DEVICE
TO 329 OR 429

Fig. 10

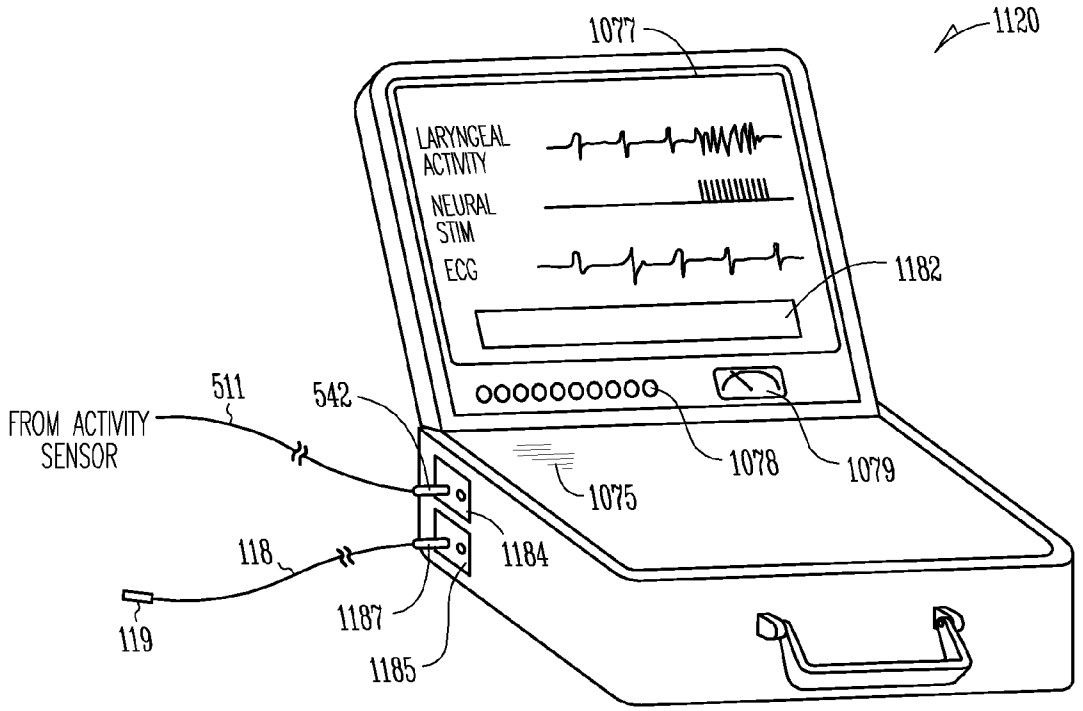
1120
1077
LARYNGEAL ACTIVITY
NEURAL STIM
ECG
1182
511
542
FROM ACTIVITY SENSOR
1078
1079
1075
118
1184
1187
119
1185

Fig. 11

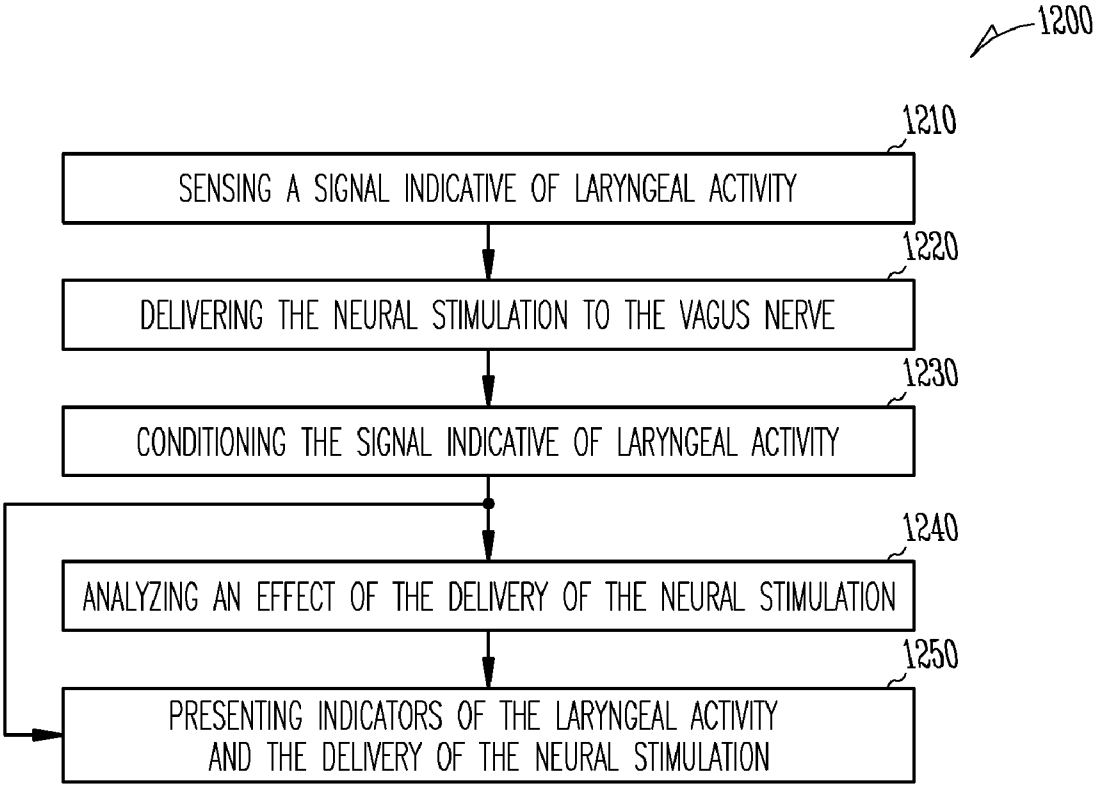
1200
1210
SENSING A SIGNAL INDICATIVE OF LARYNGEAL ACTIVITY
1220
DELIVERING THE NEURAL STIMULATION TO THE VAGUS NERVE
1230
CONDITIONING THE SIGNAL INDICATIVE OF LARYNGEAL ACTIVITY
1240
ANALYZING AN EFFECT OF THE DELIVERY OF THE NEURAL STIMULATION
1250
PRESENTING INDICATORS OF THE LARYNGEAL ACTIVITY AND THE DELIVERY OF THE NEURAL STIMULATION

Fig. 12

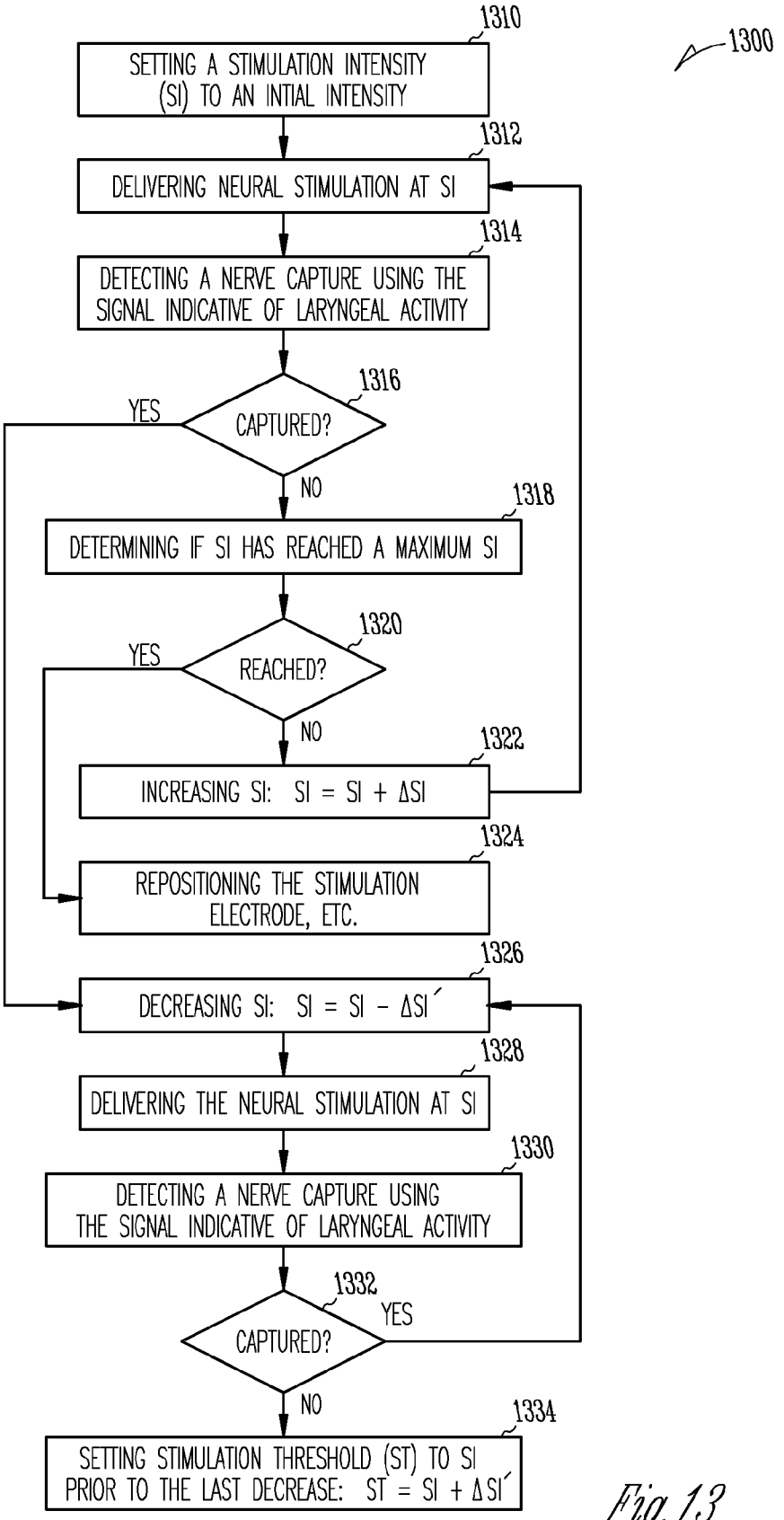
1300
1310
SETTING A STIMULATION INTENSITY (SI) TO AN INTIAL INTENSITY
1312
DELIVERING NEURAL STIMULATION AT SI
1314
DETECTING A NERVE CAPTURE USING THE SIGNAL INDICATIVE OF LARYNGEAL ACTIVITY
1316
CAPTURED?
YES
NO
1318
DETERMINING IF SI HAS REACHED A MAXIMUM SI
1320
REACHED?
YES
NO
1322
INCREASING SI: SI = SI + ΔSI
1324
REPOSITIONING THE STIMULATION ELECTRODE, ETC.
1326
DECREASING SI: SI = SI − ΔSI´
1328
DELIVERING THE NEURAL STIMULATION AT SI
1330
DETECTING A NERVE CAPTURE USING THE SIGNAL INDICATIVE OF LARYNGEAL ACTIVITY
1332
CAPTURED?
YES
NO
1334
SETTING STIMULATION THRESHOLD (ST) TO SI PRIOR TO THE LAST DECREASE: ST = SI + ΔSI´

Fig. 13

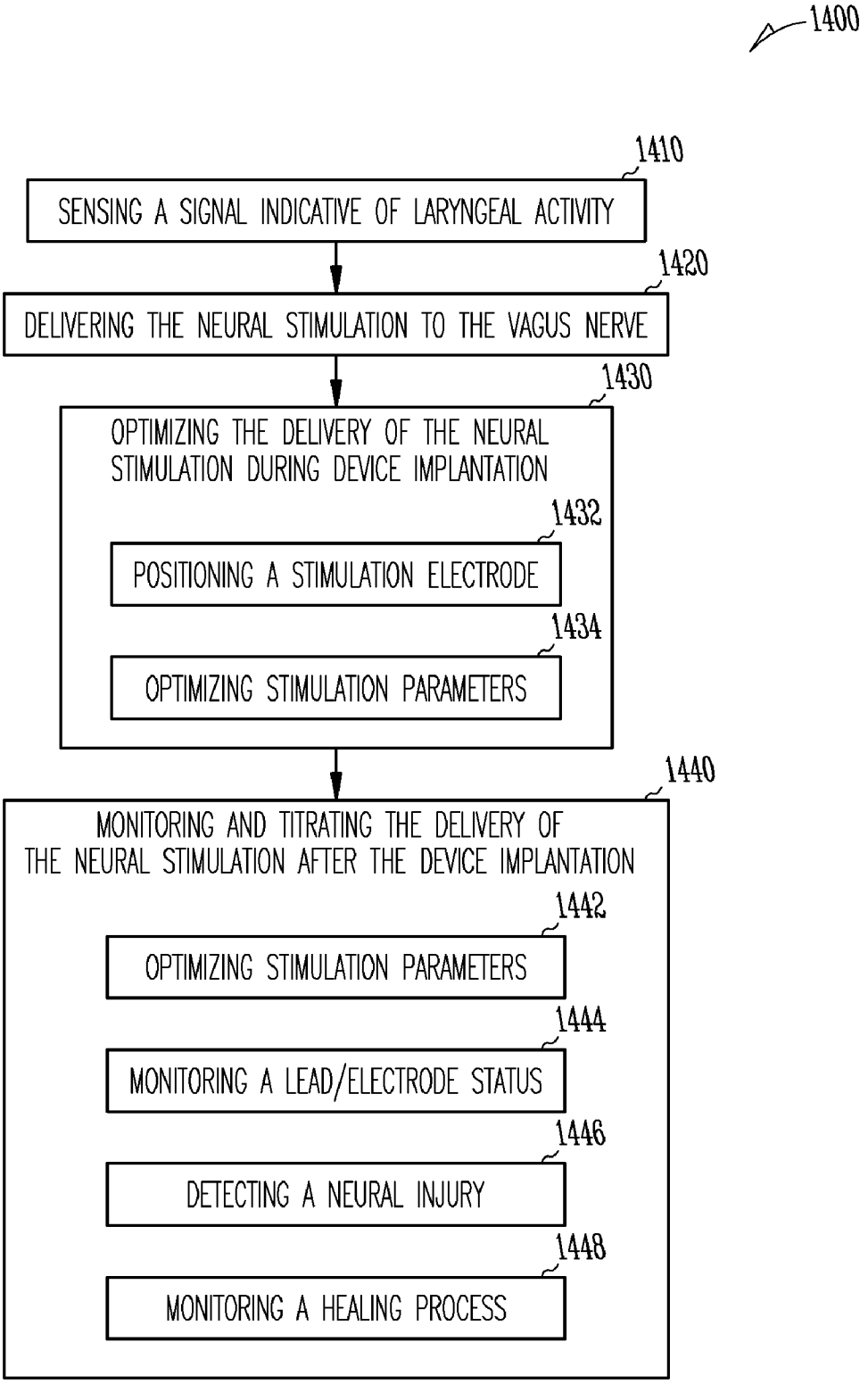
1400
1410
SENSING A SIGNAL INDICATIVE OF LARYNGEAL ACTIVITY
1420
DELIVERING THE NEURAL STIMULATION TO THE VAGUS NERVE
1430
OPTIMIZING THE DELIVERY OF THE NEURAL STIMULATION DURING DEVICE IMPLANTATION
1432
POSITIONING A STIMULATION ELECTRODE
1434
OPTIMIZING STIMULATION PARAMETERS
1440
MONITORING AND TITRATING THE DELIVERY OF THE NEURAL STIMULATION AFTER THE DEVICE IMPLANTATION
1442
OPTIMIZING STIMULATION PARAMETERS
1444
MONITORING A LEAD/ELECTRODE STATUS
1446
DETECTING A NEURAL INJURY
1448
MONITORING A HEALING PROCESS

Fig. 14

METHOD AND APPARATUS FOR OPTIMIZING VAGAL NERVE STIMULATION USING LARYNGEAL ACTIVITY

TECHNICAL FIELD

This document relates generally to neural stimulation and particularly to a system and method for optimizing vagal nerve stimulation using an activity sensor that senses a signal indicative of laryngeal activity.

BACKGROUND

Vagal nerve stimulation has been applied to modulate various physiologic functions and treat various diseases. One example is the modulation of cardiac functions in a patient suffering heart failure or myocardial infarction. The myocardium is innervated with sympathetic and parasympathetic nerves including the cardiac branches of the vagus nerve. Activities in the vagus nerve, including artificially applied electrical stimuli, modulate the heart rate and contractility (strength of the myocardial contractions). Electrical stimulation applied to the vagus nerve is known to decrease the heart rate and the contractility, lengthening the systolic phase of a cardiac cycle, and shortening the diastolic phase of the cardiac cycle. This ability of the vagal nerve stimulation is utilized, for example, to control myocardial remodeling.

In addition to treating cardiac disorders such as myocardial remodeling, vagal nerve stimulation is also know to be effective in treating disorders including, but not limited to, depression, anorexia nervosa/eating disorders, pancreatic function, epilepsy, hypertension, inflammatory disease, and diabetes. The intended therapy outcomes of vagal nerve stimulation in treating such disorders may be difficult to measure, either acutely or chronically, for purposes of therapy titration or optimization. Therefore, there is a need for titrating or optimizing vagal nerve stimulation using parameters other than the intended therapy outcomes.

SUMMARY

A neural stimulation system delivers neural stimulation to the vagus nerve and senses a signal indicative of laryngeal activity resulting from the neural stimulation. The signal indicative of laryngeal activity is used, for example, to guide electrode placement, determine stimulation threshold, detect lead/electrode problems, detect neural injury, and monitor healing processing following the electrode placement inside the body of a patient.

In one embodiment, a neural stimulation system includes an activity sensor and a neural stimulation analyzer. The activity sensor senses a signal indicative of laryngeal activity. The neural stimulation analyzer includes a laryngeal activity input to receive the signal indicative of laryngeal activity, a neural stimulation input to receive a signal indicative of the delivery of the neural stimulation to the vagus nerve, and a processing circuit. The processing circuit processes the signal indicative of laryngeal activity for analyzing the neural stimulation system using the signal indicative of laryngeal activity.

In one embodiment, a neural stimulation system includes an activity sensor, a signal conditioning circuit, a neural stimulation circuit, and a presentation device. The activity sensor senses a signal indicative of laryngeal activity. The signal conditioning circuit conditions the signal indicative of laryngeal activity. The neural stimulation circuit delivers neural stimulation to the vagus nerve. The presentation device presents indicators of the laryngeal activity and the delivery of the neural stimulation.

In one embodiment, a method for applying neural stimulation is provided. A signal indicative of laryngeal activity is sensed. The neural stimulation is delivered to the vagus nerve. The signal indicative of laryngeal activity is conditioned to isolate laryngeal activity resulting from the delivery of the neural stimulation.

This Summary is an overview of some of the teachings of the present application and not intended to be an exclusive or exhaustive treatment of the present subject matter. Further details about the present subject matter are found in the detailed description and appended claims. Other aspects of the invention will be apparent to persons skilled in the art upon reading and understanding the following detailed description and viewing the drawings that form a part thereof. The scope of the present invention is defined by the appended claims and their legal equivalents.

BRIEF DESCRIPTION OF THE DRAWINGS

The drawings illustrate generally, by way of example, various embodiments discussed in the present document. The drawings are for illustrative purposes only and may not be to scale.

FIG. **1** is an illustration of an embodiment of a neural stimulation system and portions of an environment in which the neural stimulation system is used.

FIG. **2** is an illustration of another embodiment of the neural stimulation system and portions of the environment in which the neural stimulation system is used.

FIG. **3** is a block diagram illustrating an embodiment of portions of a circuit of the neural stimulation system of FIG. **1**.

FIG. **4** is a block diagram illustrating an embodiment of portions of a circuit of the neural stimulation system of FIG. **2**.

FIG. **5** is an illustration of an embodiment of a laryngeal activity sensor assembly of the neural stimulation system.

FIG. **6** is an illustration of another embodiment of the laryngeal activity sensor assembly of the neural stimulation system.

FIG. **7** is an illustration of an embodiment of an activity sensor including a sensor base.

FIG. **8** is an illustration of another embodiment of the activity sensor including the sensor base.

FIG. **9** is a block diagram illustrating an embodiment of a processing circuit of a neural stimulation analyzer of the neural stimulation system.

FIG. **10** is a block diagram illustrating an embodiment of a user interface of the neural stimulation system.

FIG. **11** is an illustration of an embodiment of an external programmer of the neural stimulation system.

FIG. **12** is a flow chart illustrating an embodiment of a method for analyzing effect of vagal nerve stimulation using a signal indicative of laryngeal activity.

FIG. **13** is a flow chart illustrating an embodiment of a method for automatically determining a stimulation threshold for the vagal nerve stimulation using the signal indicative of laryngeal activity.

FIG. **14** is a flow chart illustrating an embodiment of a method for monitoring and titrating the vagal nerve stimulation acutely and chronically using the signal indicative of laryngeal activity.

DETAILED DESCRIPTION

In the following detailed description, reference is made to the accompanying drawings which form a part hereof, and in

which is shown by way of illustration specific embodiments in which the invention may be practiced. These embodiments are described in sufficient detail to enable those skilled in the art to practice the invention, and it is to be understood that the embodiments may be combined, or that other embodiments may be utilized and that structural, logical and electrical changes may be made without departing from the spirit and scope of the present invention. References to "an", "one", or "various" embodiments in this disclosure are not necessarily to the same embodiment, and such references contemplate more than one embodiment. The following detailed description provides examples, and the scope of the present invention is defined by the appended claims and their legal equivalents.

This document discusses a system providing for optimization of vagal nerve stimulation using a laryngeal activity sensor. The optimization includes, for example, optimization of electrode placement, automatic threshold determination or verification, monitoring of lead/electrode status, detecting of neural injury, and monitoring a healing process that follows the electrode placement. In many applications of vagal nerve stimulation, the target response (intended outcome) may be difficult to monitor and analyze for the purpose of therapy optimization. For example, a transvenous lead is used to deliver vagal nerve stimulation for controlling cardiac remodeling. The transvenous lead includes one or more electrodes at its distal end to be placed within an internal jugular vein adjacent to the vagus nerve in the cervical region. The internal jugular vein is a large vessel providing for a wide range of possible electrode positions. It is practically difficult to use effects of the vagal nerve stimulation in cardiac remodeling for guidance in the electrode placement and stimulation parameter adjustment.

On the other hand, it is known that vagal nerve stimulation causes vibration of the larynx through the recurrent laryngeal nerves, which are branches of the vagus nerve that innervate the larynx. Thus, laryngeal activity, including the magnitude and frequency of the vibration of the larynx, provides for an indication of whether the vagus nerve is activated by neural stimulation. This allows for optimization of therapy without the need to monitor and analyze the target response (such as cardiac remodeling) of the vagal nerve stimulation.

The present subject matter is applicable to stimulation of the vagus nerve using various energy forms and various signal morphology. In one embodiment, vagal nerve stimulation includes delivery of electrical pulses to the vagus nerve to artificially elicit action potentials in that nerve. In other embodiments, vagal nerve stimulation includes delivery of any form of energy that is capable of eliciting or modulating neural activities in the nervous system, such as mechanical, thermal, optical, chemical, and biological energies.

The present subject matter is applicable to neural stimulation systems providing for activation and/or inhibition of the vagus nerve for treatment of various disorders including, but not limited to, cardiac remodeling, depression, anorexia nervosa/eating disorders, pancreatic function, epilepsy, hypertension, inflammatory disease, and diabetes. In general, the present subject matter is applicable to any system providing for vagal nerve stimulation in which the neural stimulation results in detectable laryngeal activity.

While delivery of neural stimulation through a transvenous lead having one or more electrodes placed in an internal jugular vein adjacent to the vagus nerve in the cervical region is specifically discussed in this document as an example, the present subject matter is applicable to any lead and/or electrode configuration and placement for vagal nerve stimulation. Optimization of electrode placement and stimulation parameters using laryngeal activity is particularly useful when the target response of the neural stimulation is difficult to measure acutely and/or when the intended stimulation site is difficult to locate precisely without a substantially invasive surgical procedure.

FIG. **1** is an illustration of an embodiment of a neural stimulation system **100** and portions of an environment in which system **100** is used. System **100** includes an activity sensor **110** for sensing laryngeal activity, a transvenous lead **112** for delivering vagal nerve stimulation, and an external system **120** coupled to activity sensor **110** via a cable **111** and coupled to lead **112** via a cable **118**. External system **120** allows for optimization of the vagal nerve stimulation using the sensed laryngeal activity.

Lead **112** is a transvenous lead having a proximal end **114**, a distal end **113**, and an elongate body **115** coupled between proximal end **114** and distal end **113**. Proximal end **114** includes a connector **117**. In the illustrated embodiment, distal end **113** includes stimulation electrodes **116**A-B. As illustrated in FIG. **1**, a body **101** includes a neck **102**, a right internal jugular vein **104**A, a left internal jugular vein **104**B, a right subclavian vein **105**A, and a left subclavian vein **105**B. Lead **112** is inserted using techniques similar to those employed in implanting cardiac pacing leads. During the insertion, distal end **113** enters the left subclavian vein **105**B through an incision, advances in the subclavian veins **105**B and then **105**A toward right internal jugular vein **104**A, enters right internal jugular vein **104**A, advances in right internal jugular vein **104**A until electrodes **116**A-B reach one or more vagal nerve stimulation sites. After distal end **113** is in right internal jugular vein **104**A, stimulation electrodes **116**A-B are positioned, and repositioned when necessary, using lead **112** and/or a lead insertion tool such as a stylet, a guide wire, or a guide catheter.

Electrodes **116**A-B allow neural stimulation to be delivered to a vagus nerve **106**, which is adjacent to right internal jugular vein **104**A in the cervical region. Activity sensor **110** is placed on the neck over the larynx to sense a signal indicative of laryngeal activity. The laryngeal activity is used as a measure of response of vagus nerve **106** to the neural stimulation delivered to vagus nerve **106**. In various embodiments, the laryngeal activity is monitored for placement of stimulation electrodes such as electrodes **116**A-B, optimization of stimulation parameter such as those controlling stimulation intensity (e.g., stimulation amplitude, frequency, duration, and duty cycle), and detection or monitoring of various events that affect the response of vagal nerve **106** to the neural stimulation.

As illustrated in FIG. **1**, proximal end **114** remains outside of body **101**, such as during an operation of implantation of lead **112** and an implantable medical device such as one discussed below with reference to FIG. **2**. This allows electrodes **116**A-B to be placed as desired before connecting proximal end **114** to the implantable medical device. Proximal end **114** includes a connector **117** coupled to a connector **119** of cable **118** to allow delivery of the neural stimulation from external system **120**. External system **120** allows a user such as a physician or other caregiver to control the delivery of neural stimulation via lead **112** and monitor the signal indicative of larynx sensed by activity sensor **110**.

The configuration of system **100** shown in FIG. **1** is an example presented for illustrative purposes. The present subject matter generally includes monitoring and optimization of vagal nerve stimulation delivered using any electrode configuration using any signal that indicates laryngeal activity resulting from the vagal nerve stimulation. For example, lead **112** may include one or more stimulation electrodes, and an electrode pair for delivering the neural stimulation may

include two electrodes on lead **112** or an electrode on lead **112** and a reference electrode not necessarily adjacent to the vagus nerve. In one embodiment, the reference electrode is a skin patch electrode for acute use. In one embodiment, in addition to, or instead of, stimulation electrodes on lead **112** one or more nerve cuff electrodes each surrounding vagus nerve **106** are used. In one embodiment, electrodes **116**A-B are placed in the left interval jugular vein **104**B. During the insertion, distal end **113** enters the left subclavian vein **105**B or right subclavian vein **105**A through an incision, enters left internal jugular vein **104**B from right subclavian vein **105**A, advances in left internal jugular vein **104**B until electrodes **116**A-B reach one or more vagal nerve stimulation sites.

FIG. **2** is an illustration of an embodiment of a neural stimulation system **200** and portions of the environment in which system **200** is used. System **200** differs from system **100** primarily in that the neural stimulation is delivered from an implantable medical device **222** implanted in body **101**. In one embodiment, FIGS. **1** and **2** illustrate different stages of implantation and use of an implantable neural stimulation system. FIG. **1** illustrates a system setup in the middle of an implantation procedure during which lead **112** is inserted with electrodes **116**A-B placed to achieve desirable performance of vagal nerve stimulation. FIG. **2** illustrates the system set-up after the implantable neural stimulation system is fully implanted, such as during the end stage of the implantation procedure when the implantable neural stimulation system is programmed for chronic use or during a follow-up examination during which the implantable neural stimulation system is adjusted if necessary.

An activity sensor **210** represents an embodiment of activity sensor **110** that is capable of communicating with an external system **220** via a wireless link. In one embodiment, activity sensor **110** and external system **220** are electrically connected using a cable, and a communication link **211** represents the cable. In another embodiment, activity sensor **110** and external system **220** are wirelessly coupled through telemetry such as a radio-frequency electromagnetic telemetry link, and communication link **211** represents the telemetry link.

Implantable medical device **222** delivers the neural stimulation through one or both of electrodes **116**A-B. After electrodes **116**A-B are placed, proximal end **114** of lead **112** is connected to implantable medical device **222** via connector **117**. In one embodiment, the housing of implantable medical device **222** functions as a reference electrode, and the neural stimulation can be delivered using any pair of electrodes selected from electrodes **116**A-B and the housing of implantable medical device **222**. In one embodiment, neural activity in vagus nerve **106** is sensed using any pair of electrodes selected from electrodes **116**A-B and the housing of implantable medical device **222**.

In one embodiment, in addition to the neural stimulation circuit, implantable medical device **222** includes other monitoring or therapeutic circuits or devices such as one or more of cardiac pacemaker, cardioverter/defibrillator, drug delivery device, and biological therapy device. External system **220** provides for control of and communication with implantable medical device **222** by the user. External system **220** and implantable medical device **222** are communicatively coupled via a telemetry link **218**. In one embodiment, external system **220** includes a programmer. In another embodiment, external system **220** is a patient management system including an external device communicating with implantable medical device **222** via telemetry link **218**, a remote device in a remote location, and a telecommunication network linking the external device and the remote device. The patient management system allows access to implantable medical device **222** from the remote location, for purposes such as monitoring patient status and adjusting therapies. In one embodiment, telemetry link **218** is an inductive telemetry link. In an alternative embodiment, telemetry link **218** is a far-field radio-frequency telemetry link.

FIG. **3** is a block diagram illustrating an embodiment of portions of a circuit of system **100**, including an activity sensor **310** coupled to an external system **320** by cable **111**. Activity sensor **310** is an embodiment of activity sensor **110** and includes an accelerometer **331** to sense an acceleration signal being the signal indicative of laryngeal activity. Accelerometer **331** has characteristics suitable for sensing the magnitude and frequency of vibrations of the larynx that indicate activity in the vagus nerve when vagal nerve stimulation is delivered. In one embodiment, accelerometer **331** represents a plurality of accelerometers allowing for selection of an acceleration signal as the signal indicative of laryngeal activity based on the signal quality. External system **320** includes a neural stimulation analyzer **324**, a neural stimulation circuit **328**, an external controller **329**, and a user interface **330**. Neural stimulation analyzer **324** includes a laryngeal activity input **325**, a neural stimulation input **326**, and a processing circuit **327**. Laryngeal activity input **325** receives the signal indicative of laryngeal activity from activity sensor **310** via cable **111**. Neural stimulation input **326** receives a signal indicative of the delivery of the neural stimulation to the vagus nerve. Processing circuit **327** processes the signal indicative of laryngeal activity for analyzing the operation and performance of system **100** using that signal. Neural stimulation circuit **328** delivers the neural stimulation to stimulation electrodes such as electrodes **116**A-B. External controller **329** controls overall operation of external system **320**, including the delivery of the neural stimulation from neural stimulation circuit **328**. User interface **330** allows the user to control the neural stimulation and monitor the response of the vagus nerve to the neural stimulation using the signal indicative of laryngeal activity.

FIG. **4** is a block diagram illustrating an embodiment of portion of a circuit of system **200**, including an activity sensor **410** coupled to an external system **420** via communication link **211** and an implantable medical device **422** coupled to external system **420** via telemetry link **218**. Activity sensor **410** is an embodiment of activity **210** and includes accelerometer **331** and a sensor telemetry circuit **432**. In the illustrated embodiment, communication link **211** is a telemetry link. Sensor telemetry circuit **432** transmits the sensed signal indicative of laryngeal activity to external system **420** via telemetry link **211**. In another embodiment, communication link **211** is a cable providing an electrical connection between accelerometer **331** and laryngeal activity input **325**. External system **420** includes neural stimulation analyzer **324**, external telemetry circuit **438**, external controller **429**, and user interface **330**. External telemetry circuit **438** receives the signal indicative of laryngeal activity from activity sensor **410** via communication link **211** and communicates with implantable medical device **422** via telemetry link **218** to control the neural stimulation delivered from implantable medical device **422**. External controller **429** controls overall operation of external system **420**, including the transmission of commands for controlling the neural stimulation delivered from the implantable medical device **422**. Implantable medical device **422** includes a neural stimulation circuit **434**, an implant controller **435**, and an implant telemetry circuit **436**. Neural stimulation circuit **434** delivers the neural stimulation through stimulation electrodes such as electrodes **116**A-B. Implant controller **435** controls the delivery of the neural

stimulation and is responsive to the commands transmitted from external system **420**. Implant telemetry circuit **436** receives the commands from external system **420** via telemetry link **218** and when needed, transmits signals to external system **420** via telemetry link **218**.

FIG. **5** is an illustration of an embodiment of a laryngeal activity sensor assembly **540** that allows for a substantially stable attachment of an activity sensor on a patient's neck over the larynx. Laryngeal activity sensor assembly **540** includes an activity sensor **510** and a neck-bracing structure configured to hold activity sensor **510** on the neck over the larynx. Activity sensor **510** senses the signal indicative of laryngeal activity and represents any of activity sensors **110**, **210**, **310**, and **410**. In the illustrated embodiment, a cable **511** is connected to activity sensor **510** and has a connector **542** to provide electrical connections between activity sensor **510** and external system **120** or **320**. In a specific embodiment, cable **511** is detachably coupled to activity sensor **510**. In another embodiment, activity sensor **510** is communicatively coupled to external system **220** or **420** via telemetry, and cable **511** is not needed.

Laryngeal activity sensor assembly **540** includes a neck brace **544** that is configured to wrap around a substantial portion of the neck and limits the movement of the neck. Neck brace **544** includes two ends **547**A-B that are separated by a substantial gap over an anterior portion of the neck. In one embodiment, neck brace **544** is made of a material selected to limit the sensing of noise by activity sensor **510** by damping vibrations of environmental sources such as vibrations from equipment and activity of medical personnel. In one embodiment, neck brace **544** is made of a substantially soft material such as foam. Neck brace **544** has an interior surface **545** and an exterior surface **546**. Interior surface **545** is configured for contacting the neck. In one embodiment, as illustrated in FIG. **5**, neck brace **544** has a substantially even thickness between interior surface **545** and exterior surface **546**. This thickness is, for example, between approximately 10 mm and 80 mm.

Laryngeal activity sensor assembly **540** further includes two brackets **548**-B each affixed onto one of ends **547**A-B. Straps **549**A-B are coupled to brackets **548**A-B and activity sensor **510**. In one embodiment, straps **549**A-B represent different portions of a single strap. In another embodiment, straps **549**A-B represent two straps each coupled between activity sensor **510** and one of brackets **548**A-B. Straps **549**A-B are configured to press activity sensor **510** on the neck over the larynx for a substantially stable sensor placement. In one embodiment, straps **549**A-B are stretchable elastic straps. In one embodiment, at least one of straps **549**A-B is releasably coupled to one of brackets **547**A-B. In one embodiment, straps **549**A-B are coupled to the brackets in a way allowing adjustment of a position of activity sensor **510** in cranial/caudal directions.

In one embodiment, neck brace **544** is shaped to fit over the patient's head and/or shoulders to further limit the relative movement between activity sensor **510** and the larynx. In a specific embodiment, the edge of neck brace **544** that is toward the caudal direction when worn by a patient includes a contour that approximately fits over the patient's shoulders. This provides additional stability of sensor placement when the patient is sitting while the signal indicative of laryngeal activity is sensed.

FIG. **6** is an illustration of an embodiment of a laryngeal activity sensor assembly **640**, which is an alternative embodiment to laryngeal activity sensor assembly **540**. Laryngeal activity sensor assembly **640** is similar to laryngeal activity sensor assembly **540** except for a neck brace **644**, which is made of a material similar or identical to that of neck brace **544** but has a shape that is substantially different from that of neck brace **544**.

Neck brace **644** includes two ends **647**A-B that are separated by a substantial gap over an anterior portion of the neck. Brackets **548**A-B are each affixed to one of ends **647**A-B. Neck brace **644** has an interior surface **645** and an exterior surface **646**. Interior surface **644** is configured for contacting the neck. Exterior surface **646** is configured to increase stability of the sensor placement by further limiting movement of the neck. In one embodiment, as illustrated in FIG. **6**, exterior surface **646** has a flat back portion **650** over the posterior portion of the neck.

FIG. **7** is an illustration of an embodiment of an activity sensor **710**. Activity sensor **710** is an embodiment of activity sensor **510** that includes an accelerometer **731** affixed onto a sensor base **754**. Accelerometer sensor **731** represents a specific embodiment of accelerometer **331** and senses the signal indicative of laryngeal activity. Sensor base **754** is configured to be an interface between accelerometer sensor **731** and the neck, and has a surface **755** curved to fit onto the neck.

FIG. **8** is an illustration of an embodiment of an activity sensor **810**. Activity sensor **810** is an embodiment of activity sensor **710** and includes accelerometer **731** and a sensor base **854**. Sensor base **854** has a surface **855** curved to fit onto the neck of a male patient over part of his thyroid cartilage. In one embodiment, as illustrated in FIG. **8**, surface **855** includes a recess **856** on one end and a notch **857** at the other end for fitting over part of the thyroid cartilage.

FIG. **9** is a block diagram illustrating an embodiment of a processing circuit **927**, which is a specific embodiment of processing circuit **327**. Processing circuit **927** includes a signal conditioning circuit **960**, a stimulation threshold analyzer **962**, a lead status analyzer **966**, a neural injury analyzer **968**, and a presentation processing circuit **970**.

Signal conditioning circuit **960** conditions the signal indicative of laryngeal activity for analysis or presentation purposes. Signal conditioning circuit **960** increases the signal-to-noise ratio of the signal indicative of laryngeal activity, where the signal includes components of the signal indicative of laryngeal activity that result from the vagal nerve stimulation, and the noise includes components of the signal indicative of laryngeal activity that is not an effect of the vagal nerve stimulation. Signal conditioning circuit **960** includes a filter **961** that filters out the noise. In one embodiment, filter **961** has a pass-band selected based on the frequency at which neural stimulation pulses are delivered to the vagus nerve.

Stimulation threshold analyzer **962** automatically measures a stimulation threshold associated with each pair of stimulation electrodes via which the neural stimulation is delivered to the vagus nerve, such as stimulation electrodes **116**A-B. The stimulation threshold is the minimum stimulation intensity at which the neural stimulation activates the vagus nerve. Stimulation threshold analyzer **962** includes a comparator **963** and a stimulation intensity controller **964**. Comparator **963** includes a first input **963**A to receive an amplitude of the signal indicative of laryngeal activity, a second input **963**B to receive a nerve capture threshold, and an output **963**C that indicates a nerve capture when the amplitude of the signal indicative of laryngeal activity exceeds the nerve capture threshold. That is, an amplitude of the signal indicative of laryngeal activity that exceeds the nerve capture threshold is the indication that the neural stimulation has elicited action potentials propagating in the vagus nerve. In various embodiments, the nerve capture threshold is determined empirically based a patient population or each individual patient. Stimulation intensity controller **964** adjusts

the stimulation intensity of the neural stimulation such that a plurality of stimulation intensities may be tested, and stimulation threshold analyzer **962** automatically determines the stimulation threshold by selecting the tested minimum stimulation intensity that results in a nerve capture. In various embodiments in which the neural stimulation includes delivery of electrical pulses, the stimulation intensity is controlled by stimulation amplitude (voltage or current) and/or stimulation pulse width. Stimulation intensity controller **964** adjusts the stimulation intensity by adjusting the stimulation amplitude, the stimulation pulse width, or both. In one embodiment, stimulation intensity controller **964** increases the stimulation intensity from an initial intensity until the nerve capture is indicated or a specified maximum stimulation intensity is reached. If the maximum stimulation intensity is reached before the nerve capture is indicated, the stimulation electrodes are repositioned before the determination of the stimulation threshold continues. In one embodiment, stimulation threshold analyzer **962** presents the minimum capture intensity at which the nerve capture is indicated when the stimulation intensity is being increased as the stimulation threshold. In another embodiment, after the minimum capture intensity is reached, stimulation intensity controller **964** decreases the stimulation intensity from that minimum capture intensity until the nerve capture is no longer indicated. Stimulation threshold analyzer **962** presents the minimum stimulation intensity at which the nerve capture is indicated when the stimulation intensity is being decreased as the stimulation threshold.

Lead status analyzer **966** detects dislodgment or breakage of a lead for delivering the neural stimulation, such as lead **112**, by detecting a substantial change in the stimulation threshold between two stimulation threshold measurements. In one embodiment, upon detection of the dislodgment or breakage of the lead, lead status analyzer **966** produces a warning signal or message to be presented to the user through user interface **330**.

Neural injury analyzer **968** detects a nerve injury by monitoring the change in the stimulation threshold and/or the change in the amplitude of the signal indicative of laryngeal activity over time. The laryngeal nerves include efferent nerve fibers. A neural injury occurring in the nervous path between the stimulation site and the larynx is indicated by absence or weakening of laryngeal response to the vagal nerve stimulation. A weakened laryngeal response may serve as an early indication of the neural injury. Appropriate treatments may be applied in response, thereby preventing the neural injury from progressing to a degree associated with a major functional impairment. In one embodiment, neural injury analyzer **968** monitors the change in the stimulation threshold over time, determines the speed of the change in the stimulation threshold, and detects a neural injury based on the speed of the change in the stimulation threshold. In another embodiment, neural injury analyzer **968** monitors the amplitude of the signal indicative of laryngeal activity in response to delivering the neural stimulation at a specified stimulation intensity over time, determines the speed of the change in the amplitude of the signal indicative of laryngeal activity, and detects a neural injury based on the speed of the change in the amplitude of the signal indicative of laryngeal activity. In another embodiment, neural injury analyzer **968** detects a substantial change in neural conduction velocity as an indication of neural injury. In a specific embodiment, neural injury analyzer **968** measures the neural conduction velocity as the ratio of a neural conduction time to an estimated neural conduction distance, and detects a neural injury based on the change in the neural conduction velocity over time. The neural conduction time is the time interval between the delivery of a stimulus and the beginning of the elicited response in the signal indicative of laryngeal activity. In another specific embodiment, neural injury analyzer **968** measures the neural conduction time being the time interval between the delivery of a stimulus and the beginning of the elicited response in the signal indicative of laryngeal activity, and detects a neural injury based on the change in the neural conduction time over time. In one embodiment, upon detection of a possible neural injury, neural injury analyzer **968** produces a warning signal or message to be presented to the user through user interface **330**.

Presentation processing circuit **970** processes the signal indicative of laryngeal activity for presentation to the user in one or more forms through user interface **330**. In one embodiment, presentation processing circuit **970** also processes other signals, messages, and/or indicators related to laryngeal activity, lead status, neural injury, and/or other related information for presentation to the user through user interface **330**.

FIG. **10** is a block diagram illustrating an embodiment of a user interface **1030**. User interface **1030** is a specific embodiment of user interface **330** and includes a presentation device **1072** and a user input device **1080**. Presentation device **1072** presents indicators of the laryngeal activity and the neural stimulation in one or more forms. User input device **1080** allows the user to control the neural stimulation by entering commands and parameters, and to control presentation device **1080** by choosing how the laryngeal activity and the neural stimulation are indicated.

In the illustrated embodiment, presentation device **1072** includes an audio presentation device **1074** and a visual presentation device **1076**. Audio presentation device **1074** includes a speaker **1075** that generates an audible tone indicative of the laryngeal activity. The audible tone has a pitch indicative a frequency at which the larynx vibrates and/or a magnitude of the laryngeal activity. In one embodiment, the audible tone has a pitch indicative the frequency at which the larynx vibrates and a volume indicative of the magnitude of the laryngeal activity. When the neural stimulation is delivered as electrical pulses, as the stimulation frequency (the frequency at which the electrical pulses are delivered) increases, the muscular response in the larynx may change from a twitch response to a tentatic response (which means the muscle stays contracted during the delivery of an entire pulse train). In one embodiment, the stimulation frequency is selected such that the delivery of the electrical pulses elicits a twitch response but not a tentatic response. Thus, the frequency at which the larynx vibrates is the stimulation frequency, and the magnitude of the laryngeal activity is a function of the stimulation intensity.

Visual presentation device **1076** includes a screen **1077**, light-emitting diodes (LEDs) **1078**, and a gauge **1079**. Screen **1077** displays the signal indicative of laryngeal activity and a signal indicative of the neural stimulation. Examples of the signal indicative of the neural stimulation include neural stimulation markers and a neural signal indicative of vagal nerve activity sensed by the stimulation electrodes such as electrodes **116**A-B. In various embodiments, screen **1077** further displays one or more sensed physiological signals such as electrocardiogram (ECG) and various signals, messages, and/or indicators related to laryngeal activity, lead status, neural injury, and/or other related information. LEDs **1078** are each turned on when the amplitude of the signal indicative of laryngeal activity exceeds a predetermined threshold. A plurality of different thresholds each associated with one or more of LEDs **1078** allows for selective lighting of each of LEDs **1078** according to the amplitude of the signal

indicative of laryngeal activity. Gauge **1079** indicates the magnitude of the laryngeal activity. In one embodiment, gauge **1079** is in the form of an image displayed in screen **1077**. In another embodiment, gauge **1079** is a device separated from screen **1077**.

FIG. **11** is an illustration of an external programmer **1120**, which is an embodiment of external system **120**, **220**, **320**, or **420**. In the illustrated embodiment, external programmer **1120** includes speaker **1075**, screen **1077**, LEDs **1078**, and gauge **1079**. In other embodiments, external programmer **1120** includes any one or more of speaker **1075**, screen **1077**, LEDs **1078**, and gauge **1079**. In the illustrated embodiment, screen **1077** includes a trace of the signal indicative of laryngeal activity, a signal indicative of the neural stimulation, a trace and an ECG signal, and an area **1182** displaying the various signals, messages, and/or indicators related to laryngeal activity, lead status, neural injury, and/or other related information.

Programmer **1120** receives the signal indicative of laryngeal activity and controls the neural stimulation by allowing the user to enter commands and parameters. In the illustrated embodiment, programmer **1120** includes a sensor input **1184** and a stimulation output **1185**. Activity sensor **510** senses the signal indicative of laryngeal activity and transmits the sensed signal to programmer **1120** through cable **511** and connector **542**, which is detachably connected to sensor input **1184**. Cable **118** with a connector **1187** detachably connected to stimulation output **1185** and connector **119** provides for connection to stimulation electrodes such as stimulation electrodes **116**A-B on lead **112**. This allows for delivery of the neural stimulation from a neural stimulation circuit of programmer **1120**. In one embodiment, programmer **1120** is also capable of receiving the signal indicative of laryngeal activity from activity sensor **510** via telemetry. In one embodiment, programmer **1120** is also capable of controlling the delivery of the neural stimulation from a neural stimulation circuit of an implantable medical device via telemetry.

FIG. **12** is a flow chart illustrating an embodiment of a method **1200** for analyzing effect of neural stimulation using a signal indicative of laryngeal activity. In one embodiment, method **1200** is performed by systems **100** or **200**.

The signal indicative of laryngeal activity is sensed at **1210**. The neural stimulation is delivered to the vagus nerve at **1220**. The signal indicative of laryngeal activity is conditioned at **1230**, to isolate laryngeal activity resulting from the delivery of the neural stimulation from other components of the sensed signal indicative of laryngeal activity. An effect of the delivery of the neural stimulation is analyzed at **1240** using the signal indicative of laryngeal activity. Indicators of the laryngeal activity and the delivery of the neural stimulation are presented at **1250**. In one embodiment, an audible tone indicative of the laryngeal activity is generated. In a specific embodiment, the audible tone has a pitch indicative a magnitude of the laryngeal activity. In another specific embodiment, the audible tone has a pitch indicative a frequency at which the larynx vibrates and a volume indicative of a magnitude of the laryngeal activity. In another embodiment, a visual indication of the laryngeal activity is produced. Examples of the visual indication include traces of the signal indicative of laryngeal activity, a signal indicative of the neural stimulation, and a gauge indicative of magnitude of the laryngeal activity.

FIG. **13** is a flow chart illustrating an embodiment of a method **1300** for automatically determining a stimulation threshold for the neural stimulation using the signal indicative of laryngeal activity. The stimulation threshold is indicative of the minimum stimulation intensity required to capture the vagus nerve. In one embodiment, method **1300** is performed by stimulation threshold analyzer **962**.

The stimulation intensity (SI) of the neural stimulation is set to an initial intensity at **1310**. In one embodiment, the initial intensity is an empirically determined parameter. In one embodiment, the initial intensity is selected by the user. When the neural stimulation is delivered as electrical pulses, the SI is controlled by the (voltage or current) and the pulse width of each of the electrical pulses.

The neural stimulation is delivered to the vagus nerve at the SI at **1312**. A nerve capture is being detected using the signal indicative of laryngeal activity at **1314**, by comparing the amplitude of the signal indicative of laryngeal activity to a nerve capture threshold. The nerve capture is detected at **1316** if the amplitude of the signal indicative of laryngeal activity exceeds the nerve capture threshold.

If the nerve capture is not detected at **1316**, whether the SI has reached a specified maximum SI is determined at **1318**. If the SI has reached the specified maximum SI at **1320**, the stimulation electrodes are repositioned, or other approaches must be taken to increase the specified maximum SI and/or decrease the stimulation threshold, at **1324**. In one embodiment, the stimulation electrodes are "repositioned", or selected, electronically. The neural stimulation is delivered to the vagus nerve using an active set of stimulation electrodes electronically selected from multiple available sets of stimulation electrodes, and electronically repositioning means electronically selecting a different set of available stimulation electrodes to be the active set of stimulation electrodes. If the SI has not reached the specified maximum SI at **1320**, the SI is increased by ΔSI at **1322**, and method **1300** returns to **1312** to continue therefrom. In one embodiment, the stimulation threshold is determined as a voltage of an electrical pulse at a specified pulse width. In a specific embodiment, ΔSI is about 0.2 V.

If the nerve capture is detected at **1316**, the current SI is the minimum capture intensity at which the nerve capture is detected as the stimulation intensity is being increased. The SI is decreased from that minimum capture intensity, with ΔSI' being the decrement step, at **1326**. In one embodiment, ΔSI' and ΔSI are set to the same value. In a specific embodiment, ΔSI' is about 0.2 V.

The neural stimulation is delivered at the (decreased) SI at **1328**. A nerve capture is being detected using the signal indicative of laryngeal activity at **1330**, by comparing the amplitude of the signal indicative of laryngeal activity to the nerve capture threshold. The nerve capture is detected at **1332** if the amplitude of the signal indicative of laryngeal activity exceeds the nerve capture threshold.

If the nerve capture is detected at **1332**, method **1300** returns to **1326** to further decrease the SI and continue therefrom. If the nerve capture is not detected at **1332**, the SI prior to the last decrease at **1326** is set to the stimulation threshold at **1334**. That is, the stimulation threshold (ST) is the current SI (after 1326) plus ΔSI'.

FIG. **14** is a flow chart illustrating an embodiment of a method **1400** for monitoring and titrating the neural stimulation acutely and chronically using the signal indicative of laryngeal activity. Method **1400** is performed during and after the implantation of an implantable neural stimulation system. In one embodiment, method **1400** is performed with systems **100** and/or **200**.

The signal indicative of laryngeal activity is sensed at **1410**. The neural stimulation is delivered to the vagus nerve at **1420**. The laryngeal activity indicates the response of the vagus nerve to the neural stimulation. The response depends on, for example, the position of the stimulation electrodes,

stimulation parameters, condition of the neural stimulation system such as condition of the leads and/or stimulation electrodes, existence and progress of neural injury, and healing of tissue surrounding the stimulation electrodes following implantation of the stimulation electrodes.

The delivery of the neural stimulation is optimized during the implantation of an implantable medical device at **1430**. This includes, for example, positioning a stimulation electrode at **1432** and optimizing stimulation parameters associated with that stimulation electrode at **1434**. In various embodiments, **1432** and **1434** are performed for each stimulation electrode or each pair of stimulation electrodes. The stimulation electrode is placed for delivering the neural stimulation to the vagus nerve using the signal indicative of laryngeal activity. In one embodiment, the stimulation electrode is incorporated onto the distal end of a transvenous lead. The transvenous lead is inserted into the vascular system such that the stimulation electrode is in a position within an approximate target region in an internal jugular vein. A stimulation threshold is determined automatically, such as by performing method **1300**, for that position using the signal indicative of laryngeal activity. If the stimulation threshold is not satisfactory, the stimulation electrode is placed in another position within the approximate target region, and the stimulation threshold is determined for the new position. The repositioning and threshold determination are repeated until a satisfactory stimulation threshold is obtained. In one embodiment, the repositioning is performed electronically. The neural stimulation is delivered using an active stimulation electrode electronically selected from a plurality of available stimulation electrodes, and placing a stimulation electrode in another position means electronically selecting an available stimulation electrode placed in another position to be the active stimulation electrode. In another embodiment, after the transvenous lead is inserted and the stimulation electrode is in the position within the approximate target region, a minimal electrical current is delivered to the vagus nerve using the stimulation electrode. The amplitude is kept low but sufficient to produce laryngeal activity that can be sensed. The amplitude of the signal indicative of laryngeal activity is monitored while the stimulation electrode is moved to evaluate positions within the approximate target region. The stimulation electrode is positioned permanently in the location associated with a maximum amplitude of the signal indicative of laryngeal activity.

After the stimulation electrode is positioned at **1432**, the stimulation parameters associated with the stimulation electrode are optimized at **1434**. In one embodiment, this includes determining the stimulation threshold associated with the stimulation electrode automatically, such as by performing method **1300**, for the permanent position of the stimulation electrode. The stimulation intensity associated with the stimulation electrode is programmed for chronic use based on the stimulation threshold, such as by setting the stimulation intensity to a value exceeding the stimulation threshold by a predetermined margin.

The delivery of the neural stimulation is monitored and titrated after the device implantation at **1440**. This includes, for example, optimizing stimulation parameters at **1442**, monitoring a lead or stimulation electrode status at **1444**, detecting a neural injury at **1446**, and monitoring a healing process at **1448**. In various embodiments, **1440**, or any portion thereof, is performed by the user during a follow-up examination according a specified schedule, such as on an approximately periodic basis.

The stimulation parameters are optimized at **1442**. In one embodiment, this includes determining the stimulation threshold associated with each stimulation electrode automatically, such as by performing method **1300**. If the stimulation threshold associated with an electrode has changed substantially from the previous measurement, the stimulation intensity associated with that stimulation electrode is adjusted based on the new stimulation threshold, such as by setting the stimulation intensity to a value exceeding the new stimulation threshold by a predetermined margin.

The lead or stimulation electrode status is monitored at **1444**. This includes, for example, detection of possible displacement, dislodgement, and breakage of the lead. A possible lead problem is indicated by a substantial, abnormal change in the stimulation threshold between measurements of the stimulation threshold.

A neural injury is detected at **1446**. In one embodiment, the neural injury is detected by monitoring the change in the stimulation threshold over time. A possible neural injury is indicated by a detected abnormal speed of change in the stimulation threshold. In another embodiment, the neural injury is detected by monitoring the amplitude of the signal indicative of laryngeal activity in response to delivering neural stimulation at a specified stimulation intensity over time. A possible neural injury is indicated by a detected abnormal speed of the change in the amplitude of the signal indicative of laryngeal activity. The neural injury detection at **1446** allows for early discovery of a neural injury that needs immediate treatment to prevent from developing into a major functional impairment.

A healing process is monitored at **1448**. After the implantation of the implantable medical device and the lead or stimulation electrodes, it may take weeks or months for the tissue injured during the implantation to heal and the interface between the body and the implanted system to stabilize. This healing process is monitored by monitoring the change in the stimulation threshold over time. A stabilized stimulation threshold is an indication that the healing process may have substantially completed.

It is to be understood that the above detailed description is intended to be illustrative, and not restrictive. Other embodiments will be apparent to those of skill in the art upon reading and understanding the above description. The scope of the invention should, therefore, be determined with reference to the appended claims, along with the full scope of equivalents to which such claims are entitled.

What is claimed is:

1. A neural stimulation system for applying neural stimulation to a body having a neck, a larynx, and a vagus nerve, the system comprising:

an activity sensor adapted to sense a signal indicative of laryngeal activity;

a laryngeal activity sensor assembly including a neck-bracing structure configured to hold the activity sensor on the neck over the larynx; and

a neural stimulation analyzer communicatively coupled to the activity sensor, the neural stimulation analyzer including:

a laryngeal activity input to receive the signal indicative of laryngeal activity;

a neural stimulation input to receive a signal indicative of a delivery of the neural stimulation to the vagus nerve; and

a processing circuit coupled to the laryngeal activity input and the neural stimulation input, the processing circuit configured to process the signal indicative of laryngeal activity for analyzing the neural stimulation system using the signal indicative of laryngeal activity.

2. The neural stimulation system of claim 1, wherein the activity sensor comprises an accelerometer adapted to sense an acceleration signal being the signal indicative of laryngeal activity.

3. A neural stimulation system for applying neural stimulation to a body having a neck, a larynx, and a vagus nerve, the system comprising:

an activity sensor adapted to sense a signal indicative of laryngeal activity;

a laryngeal activity sensor assembly including the activity sensor and a neck brace configured to wrap around a portion of the neck; and

a neural stimulation analyzer communicatively coupled to the activity sensor, the neural stimulation analyzer including:

a laryngeal activity input to receive the signal indicative of laryngeal activity;

a neural stimulation input to receive a signal indicative of a delivery of the neural stimulation to the vagus nerve; and

a processing circuit coupled to the laryngeal activity input and the neural stimulation input, the processing circuit configured to process the signal indicative of laryngeal activity for analyzing the neural stimulation system using the signal indicative of laryngeal activity.

4. The neural stimulation system of claim 3, wherein the neck brace comprises two ends separated by a gap over an anterior portion of the neck, and the laryngeal activity sensor assembly further comprises:

brackets each affixed onto one of the two ends of the neck brace; and

one or more straps coupled to the brackets and the activity sensor, the one or more straps configured to press the activity sensor on the neck over the larynx.

5. The neural stimulation system of claim 4, wherein the one or more straps are coupled to the brackets in a way allowing adjustment of a position of the activity sensor in cranial/caudal directions.

6. The neural stimulation system of claim 4, wherein the activity sensor comprises a sensor base including a surface curved to fit onto the neck.

7. A neural stimulation system for applying neural stimulation to a body having a neck, a larynx, and a vagus nerve, the system comprising:

an activity sensor adapted to sense a signal indicative of laryngeal activity; and

a neural stimulation analyzer communicatively coupled to the activity sensor, the neural stimulation analyzer including:

a laryngeal activity input to receive the signal indicative of laryngeal activity;

a neural stimulation input to receive a signal indicative of a delivery of the neural stimulation to the vagus nerve;

a signal conditioning circuit adapted to increase a signal-to-noise ratio of the signal indicative of laryngeal activity, the signal including components of the signal indicative of laryngeal activity resulting from the neural stimulation; and

a processing circuit coupled to the laryngeal activity input and the neural stimulation input, the processing circuit configured to process the signal indicative of laryngeal activity for analyzing the neural stimulation system using the signal indicative of laryngeal activity.

8. The neural stimulation system of claim 7, comprising a laryngeal activity sensor assembly including a neck-bracing structure configured to hold the activity sensor on the neck over the larynx.

9. The neural stimulation system of claim 7, further comprising:

stimulation electrodes to deliver the neural stimulation to the vagus nerve; and

a neural stimulation circuit, coupled to the stimulation electrodes, to deliver neural stimulation pulses through to the vagus nerve through the stimulation electrodes.

10. The neural stimulation system of claim 9, further comprising a presentation device adapted to present indicators of the laryngeal activity and the delivery of the neural stimulation pulses.

11. The neural stimulation system of claim 9, wherein the neural stimulation analyzer comprises a stimulation threshold analyzer adapted to measure at least one stimulation threshold automatically, the stimulation threshold being a minimum stimulation intensity required for the neural stimulation pulses to elicit a neural response in the vagus nerve.

12. The neural stimulation system of claim 11, wherein the stimulation threshold analyzer comprises a comparator including a first input to receive an amplitude of the signal indicative of laryngeal activity, a second input to receive a nerve capture threshold, and an output indicative of a nerve capture when the amplitude of the signal indicative of laryngeal activity exceeds the nerve capture threshold.

13. The neural stimulation system of claim 12, wherein the stimulation threshold analyzer comprises a stimulation intensity controller adapted to increase a stimulation intensity from an initial intensity until the nerve capture is indicated or a predetermined maximum stimulation intensity is reached.

14. The neural stimulation system of claim 13, wherein the stimulation intensity controller is further adapted to decrease the stimulation intensity, after the nerve capture is indicated, until the nerve capture is no longer indicated.

15. The neural stimulation system of claim 11, further comprising a transvenous lead including:

a proximal end coupled to the neural stimulation circuit;

a distal end including at least one of the stimulation electrodes; and

an elongate body coupled between the proximal end and the distal end.

16. The neural stimulation system of claim 15, wherein the neural stimulation analyzer comprises a lead status analyzer adapted to produce a warning of lead dislodgment or breakage based on the change in the at least one stimulation threshold associated with the at least one of the stimulation electrodes included in the distal end of the lead between measurements of that stimulation threshold.

17. The neural stimulation system of claim 11, wherein the neural stimulation analyzer comprises a neural injury analyzer adapted to detect a nerve injury by monitoring one or more of a change in the at least one stimulation threshold over time, a change in the amplitude of the signal indicative of laryngeal activity over time, and a change in a neural conduction velocity over time.

18. The neural stimulation system of claim 9, further comprising:

an implantable medical device including the neural stimulation circuit; and

an external system communicatively coupled to the implantable medical device via telemetry, the external system including the neural stimulation analyzer.

19. A neural stimulation system for applying neural stimulation to a body having a neck, a larynx, and a vagus nerve, the system comprising:

an activity sensor adapted to sense a signal indicative of laryngeal activity;

a laryngeal activity sensor assembly configured to hold the activity sensor on the neck over the larynx;

a signal conditioning circuit, communicatively coupled to the activity sensor, to condition the signal indicative of laryngeal activity;

a neural stimulation circuit adapted to deliver the neural stimulation to the vagus nerve; and

a presentation device coupled to the signal conditioning circuit and the neural stimulation circuit, the presentation device adapted to present indicators of the laryngeal activity and the delivery of the neural stimulation.

20. The neural stimulation system of claim **19**, wherein the activity sensor comprises an accelerometer.

21. The neural stimulation system of claim **19**, wherein the presentation device comprises a speaker configured to produce an audible tone indicative of the laryngeal activity.

22. The neural stimulation system of claim **19**, wherein the presentation device comprises a visual indicator configured to produce a visual indication of the laryngeal activity.

23. The neural stimulation system of claim **22**, wherein the visual indicator comprises a screen displaying the signal indicative of laryngeal activity and a signal indicative of the neural stimulation.

24. The neural stimulation system of claim **22**, wherein the visual indicator comprises one or more light-emitting diodes each turned on when an amplitude of the signal indicative of laryngeal activity exceeds a threshold.

25. The neural stimulation system of claim **22**, wherein the visual indicator comprises a gauge indicative of a magnitude of the laryngeal activity.

26. A method for applying neural stimulation to a body having a neck, a larynx, and a vagus nerve, the method comprising:

sensing a signal indicative of laryngeal activity;

delivering the neural stimulation to the vagus nerve;

conditioning the signal indicative of laryngeal activity to isolate laryngeal activity resulting from the delivery of the neural stimulation; and

presenting indicators of the laryngeal activity.

27. The method of claim **26**, wherein presenting the indicators of the laryngeal activity comprises producing an audible tone indicative of the laryngeal activity, the audible tone having a pitch indicative at least one of a frequency at which the larynx vibrates and a magnitude of the laryngeal activity.

28. The method of claim **27**, wherein presenting the indicators of the laryngeal activity comprises displaying the signal indicative of laryngeal activity on a screen.

29. The method of claim **27**, wherein presenting the indicators of the laryngeal activity comprises presenting a magnitude of the laryngeal activity using light emitting diodes.

30. The method of claim **27**, wherein presenting the indicators of the laryngeal activity comprises presenting a magnitude of the laryngeal activity using a gauge.

31. The method of claim **26**, further comprising determining a stimulation threshold automatically using the signal indicative of laryngeal activity, the stimulation threshold indicative of a minimum stimulation intensity required to capture the vagus nerve by the neural stimulation.

32. The method of claim **31**, wherein determining the stimulation threshold automatically comprises:

setting a stimulation intensity of the neural stimulation to an initial intensity;

detecting a nerve capture by comparing the amplitude of the signal indicative of laryngeal activity to a nerve capture threshold; and

increasing the stimulation intensity from the initial intensity until the nerve capture is detected or if a predetermined maximum stimulation intensity is reached before the nerve capture is detected.

33. The method of claim **32**, wherein determining the stimulation threshold automatically further comprises decreasing the stimulation intensity, after the nerve capture is detected, until the nerve capture is no longer detected, and further comprising presenting a minimum intensity at which the nerve capture is detected when the stimulation intensity is being decreased as the stimulation threshold.

34. The method of claim **31**, further comprising detecting a lead dislodgement or breakage by monitoring a change in the stimulation threshold over two or more measurements of the stimulation threshold.

35. The method of claim **31**, further comprising detecting a neural injury by monitoring a change in the stimulation threshold over time.

36. The method of claim **35**, further comprising detecting a neural injury by monitoring a change in a neural conduction velocity over time.

37. The method of claim **26**, wherein delivering the neural stimulation to the vagus nerve comprises delivering neural stimulation pulses through a stimulation electrode, and further comprising positioning the stimulation electrode by using the laryngeal activity for guidance.

38. The method of claim **37**, further comprising monitoring a tissue healing process following an implantation of the stimulation electrode by monitoring a change in the stimulation threshold over time.

39. The method of claim **37**, wherein positioning the stimulation electrode comprises electronically selecting one or more active stimulation electrodes from a plurality of available stimulation electrodes.

* * * * *