ELSEVIER

Journal of Materials Processing Technology 177 (2006) 396–400

Journal of Materials Processing Technology

www.elsevier.com/locate/jmatprotec

Investigation of 22MnB5 formability in hot stamping operations

A. Turetta*, S. Bruschi, A. Ghiotti

DIMEG University of Padova, Via Venezia, 1-35131 Padova, Italy

Abstract

In the automotive industry, the hot forming of high strength steels offers the possibility to obtain significant reduction of weight without affecting the structural performances of final products. The main reason of its restricted application in the industry lies however in the lack of basic knowledge about mechanical and microstructural characteristics of sheets at elevated temperature, boundary conditions (i.e. friction and heat transfer), sensitivity of the formed component geometrical and mechanical characteristics to all the process parameters. To partially overcome this limitation, this paper presents a novel test based on the Nakazima concept which is able to evaluate the material formability at elevated temperature. Thermal tests with the aid of a dilatometer device were utilised to generate phase transformation data while uni-axial tensile tests, performed simultaneously with quenching, provided flow stress data at different temperatures and strain rates. The effective thermal cycle to apply during the formability test was optimized through numerical simulations of the test itself suitably calibrated through the above data.
© 2006 Elsevier B.V. All rights reserved.

Keywords: High strength steels; Hot stamping; Sheet metal formability

1. Introduction

In the automotive industry the demand of coupling performances with cost reduction and respect of environment is stronger and stronger. These requirements force car manufacturers to a continuous search of new solutions, in direction of both new product features and novel manufacturing processes. In the last decade, the most challenging objectives have been represented by: (i) the increase of crash performance and safety, (ii) the reduction of fuel consumption and environmental impact, and (iii) the increase of accuracy and precision for easy, cheap and reliable joining and assembly. With regards to these aspects, the introduction of high strength steels (HSS) represents the better solution to increase the strength-to-mass ratio of sheet components.

However, the multi-phase microstructure, which is at the base of the strengthening mechanisms in most of these steels, leads to unacceptably high stresses during forming and significant spring-back phenomena, thus making traditional sheet metal forming technologies unsuitable. The possibility to perform stamping operations at elevated temperatures represents a solution of these problems, allowing lower loads on tools and higher accuracy of formed components. Compared with conventional sheet metal forming, the proper design of hot stamping process chain requires the deep knowledge of both interface phenomena and material behaviour at high temperatures in order to obtain the desired properties of final products in terms of microstructure and strength characteristics. In the industrial process, the blank is heated in the range between 850 and 950 °C and then transferred to the press where the whole deforming phase should take place in fully austenitic conditions; the use of cooled dies assures a rapid cooling of the sheet during the deformation in order to obtain a martensitic microstructure in the sheet component at room temperature [1–3].

The work presented in this paper is part of a research project, which aims at developing a general approach that will be able to offer accurate evaluations of the influence of process parameters on the properties of final sheet components produced in hot forming operations. In particular, the objective of the paper is to present a novel test, based on the Nakazima test concept, for the investigation of material formability at elevated temperatures under the same processing conditions the sheet experiences during the industrial process. The first part of the paper presents thermal tests on 22MnB5 sheets to obtain all the data needed to trace the CCT curves of the material; uni-axial tensile tests were also carried out to determine the material rheological behaviour as function of temperature and strain rate [4]. All the material and phase transformation data were implemented in the numerical model of the formability test and

* Corresponding author.
E-mail address: alberto.turetta@unipd.it (A. Turetta).
URL: http://www.dimeg.unipd.it.

0924-0136/$ – see front matter © 2006 Elsevier B.V. All rights reserved.
doi:10.1016/j.jmatprotec.2006.04.041

Ex. 2023
IPR2024-01376

a sensitivity analysis to thermal parameters were performed to identify the heating and cooling phases parameters capable to assure the achievement of the microstructural constraints characterising hot stamping processes. Finally, in the second part of the paper, the new experimental set-up, developed by following the rules previously identified, is described in its main components.

2. Mechanical and phase transformation experiments

The accuracy of the results from the numerical simulations of the Nakazima test is strongly related to the goodness of the data implemented in the model that deal with the phase transformation from austenite to martensite [5]. Data about the material CCT curves depending on the initial grain size have to be experimentally determined together with the rheological behaviour of the material at the processing temperatures. In this work two different tests were carried out at elevated temperatures on a Gleeble 3800 system: the first one, performed with a dilatometer, was a thermal cycle to identify the CCT curves of the material; while the second test was a tensile one to identify the material rheological behaviour. The material investigated was boron steel 22MnB5 in the form of sheet, 1.5 mm thick, widely utilised in hot stamping operations.

Preliminary heating tests were carried out to determine the most suitable austenitization temperature and the related holding time in order to assure a completely homogeneous microstructure. This information can help in designing the thermal cycle the specimen has to be subjected during the Nakazima test. Different austenitization times and temperatures were used, characterised by steps of 1, 2, 5, and 10 min, at 850, 900, and 950 °C. The temperature of grain coarsening starting is considered the upper temperature limit.

Considering the resulting microstructure in terms of grain size (Fig. 1), an austenitization temperature equal to 900 °C together with an holding time of 5 min assures a complete austenitization (non-transformed ferrite is not present any more) without significant grain coarsening (Fig. 2). To determine the characteristic features of the CCT curves, different cooling rates were applied to the specimen, while monitoring the onset and the completion of the phase transformation through a dilatometer. The slowest cooling rate avoiding the bainitic transformation

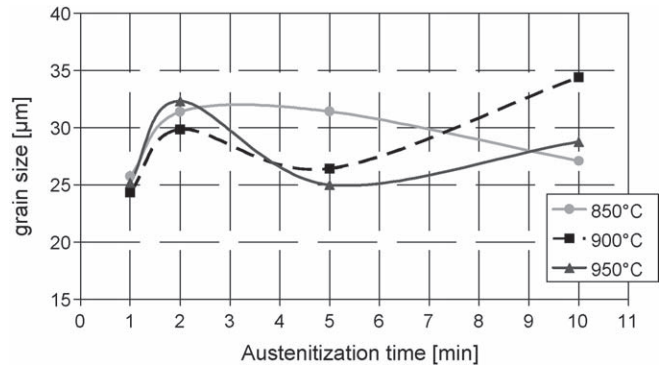

Fig. 2. Austenitic grain size of quenched specimens after different austenitization times and temperatures.

was recognized to be 30 °C/s, while the temperature of martensite start was found to be 382 °C.

To investigate the material behaviour, tensile tests were carried out where the specimens were austenitized at 900 °C for 5 min, cooled in air for a few seconds to reproduce the heat loss during the transfer to the press, and then subjected to a cooling rate equal to 40 °C/s to avoid the bainitic transformation. Once the chosen testing temperature was reached, uni-axial tensile tests were carried out while continuing quenching the specimen. The temperature versus time diagram of the tensile test is reported in Fig. 3. Metallographic observations were as well carried out proving that all the specimens presented a fully martensitic microstructure at the end of the test.

Fig. 4 shows the material sensitivity to strain rate and temperature: temperature has a strong effect while strain rate seems less influencing the material process window.

3. Numerical model of the formability test

Numerical simulations of the Nakazima test at elevated temperatures were carried out in order to evaluate the influence of punch speed and temperature on the specimen microstructure evolution. Rheological and microstructural data obtained from the experiment presented above were used to generate the 22MnB5 material database necessary to calibrate the FE model. The initial specimen temperature was set to 900 °C, while the die and the blank holder were kept at room temperature; the microstructure evolution of the specimen were controlled

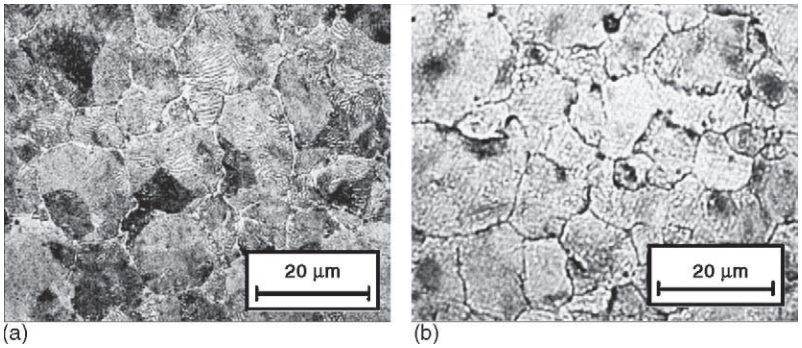

Fig. 1. Micrographs of austenitized specimens: (a) after 5 min at 850 °C and (b) after 5 min at 900 °C (microstructures revealed through the McQuaid-Ehn procedure).

Ex. 2023
IPR2024-01376

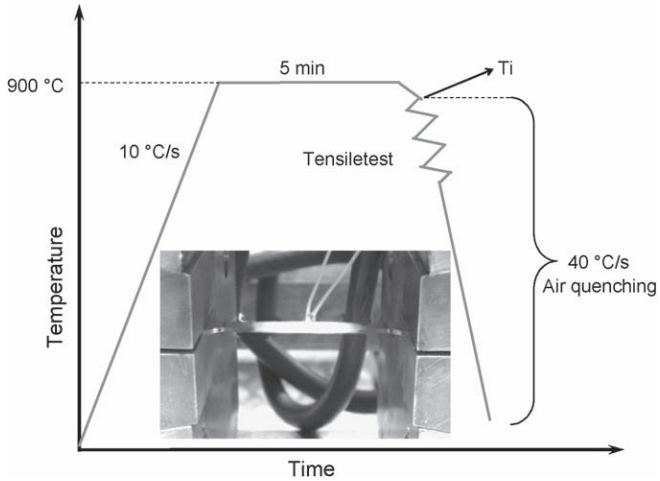

Fig. 3. Thermo-mechanical cycle for tensile testing and tensile specimen during a heating test.

through six sensors located in the sheet (Fig. 5a). The imposed punch stroke was 40 mm.

Considering the specimen microstructure resulting from simulations at different test condition, the lower limit for punch speed capable to assure that deformation takes place with a reasonably high percentage of austenitic phase was 10 mm/s (see Fig. 5b). Increasing the punch temperature it is possible to enhance the percentage of austenitic phase during deformation as shown in Fig. 6, reducing furthermore the presence of ferrite and bainite at the end of the process and assuring the maximum amount of martensite [6].

4. Experimental apparatus

Based on phase transformation data and numerical analyses, a novel formability test at elevated temperatures was developed. The experimental set-up is shown in Fig. 7. The test is based on the Nakazima concept, in which the specimen is heated up to the austenitization temperature and then cooled simultaneously with deformation.

The specimens are rectangular blanks, with different widths, from 200 to 25 mm. By varying the dimensions of each specimen, different strain paths can be obtained in order to determine the whole formability curve. The influence of anisotropy can be as well evaluated by utilising specimens with different orientation with respect to the rolling direction.

In the blank holder a die beading is included blocking up uncontrolled drawing-in of the testing material. The punch diameter is fixed in the experimentation and its velocity can be selected variable between 10 and 1500 mm/min. The elements of the experimental equipment and the temperature fields were optimized by using coupled thermo-mechanical simulations based on FE method, as shown in Fig. 8 for the temperature distribution in the blank holder.

The specimens are heated up to the austenitization temperature by means of inductors heads of appropriate shape and dimensions: pancake for strip having the width superior than 100 mm and rectangular frontal inductor for the thinner sheets. During the heating and the deforming phases, the temperature fields in the specimen and in the dies are monitored using an infrared thermo-camera system.

The deformation of the sheet is measured by an optical deformation measurement system including the CCD cameras and the lighting equipment, which combines the advantages of photogrammetry with the object grating method [7]. A stochastic pattern, characterised by a black base coat (to avoid reflection) and small white spots, is applied on the specimen. During deformation, the 3D-coordinates of the surface of the specimen are monitored and afterwards the acquired data are elaborated. Details on the design and the manufacture of the testing equipment are in Ref. [8].

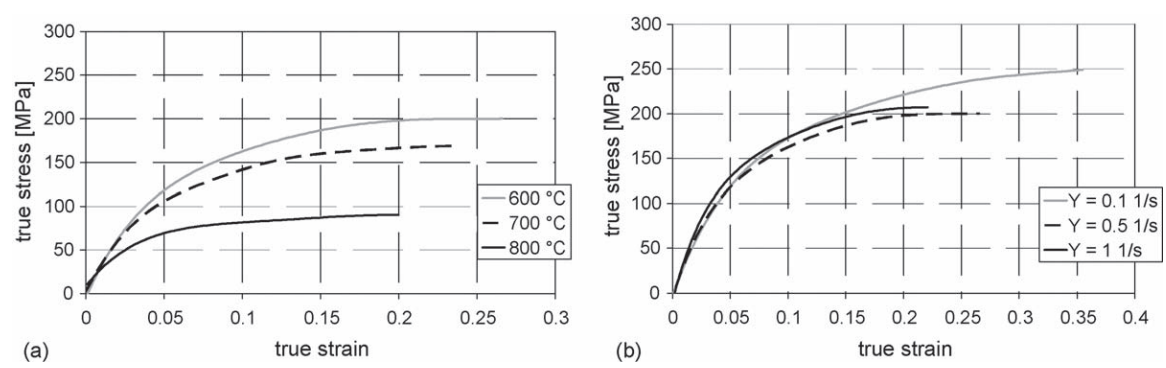

Fig. 4. Material sensitivity to temperature: (a) at strain rate equal to 0.5 s^{-1} and to strain rate (b) at initial testing temperature of 600 °C.

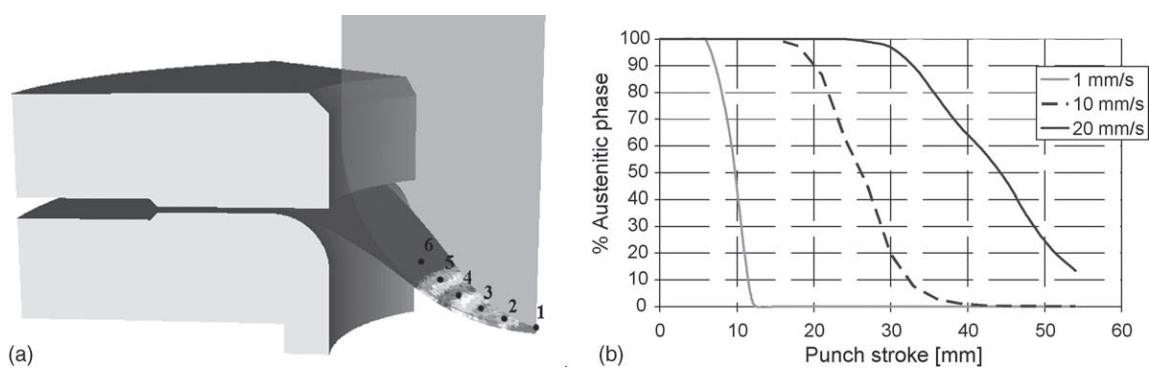

Fig. 5. (a) Sensors position in the sheet and (b) evolution of the austenitic phase proportion for sensor no. 3 at different punch speeds.

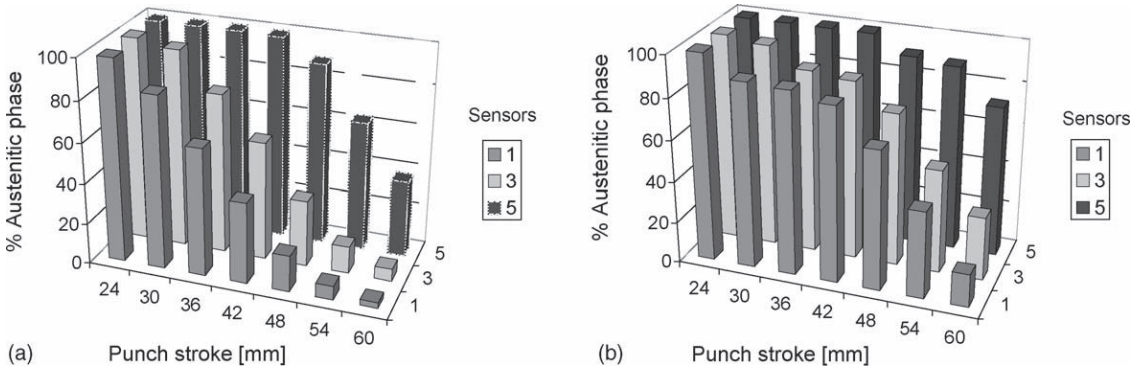

Fig. 6. Austenitic phase evolution during deformation at 20 mm/s with punch at room temperature (a) and at 300 °C (b).

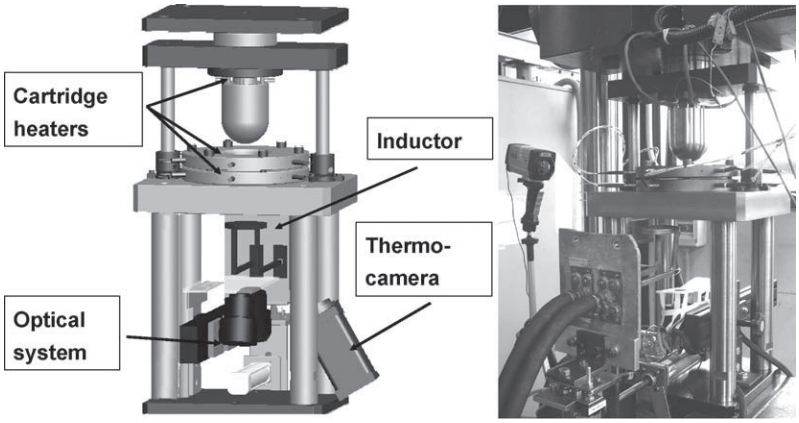

Fig. 7. Scheme on the left and experimental apparatus on the right for FLD determination at elevated temperature.

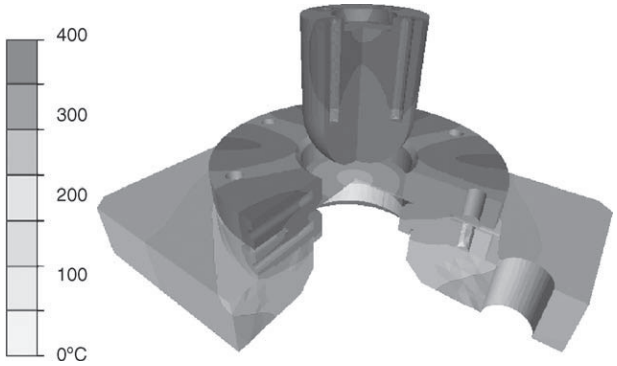

Fig. 8. Thermal field in the equipment from FE simulation of the heating process.

5. Conclusions

In hot stamping operations an accurate evaluation of the influence of process parameters on the properties of final sheet components is fundamental in the design and optimisation of the forming process. 22MnB5 mechanical and phase transformation data were identified through thermo-mechanical tests reproducing the industrial conditions. Thermal tests were used to determine CCT curves of the material and uni-axial tensile tests generated rheological data. Based on these data, a novel experimental test was developed, which allows the determination of sheet formability, reproducing the hot stamping process conditions in terms of cooling rates and phase distributions during and after deformation. The coupling of strain paths and temperature conditions in the sheet is achieved thanks to a closed loop control, which integrates an infrared thermo-camera and an induction heating system, together with a flexible optical system for strain measurement. The apparatus developed is suitable to test HSS steels up to 900 °C.

References

[1] D. Lorenz, K. Roll, Simulation of hot stamping and quenching of boron alloyed steel, in: Presented at Seventh Int. ESAFORM Conf. on Mat. Forming, Trondheim, Norway, 2004.

[2] M. Geiger, M. Merklein, C. Hoff, Basic investigation on the hot stamping steel 22MnB5, in: Proceedings of the Sheet Metal 2005 Conf., 2005, pp. 795–802.

[3] M. Suehiro, K. Kusumi, T. Miyakoshi, J. Maki, M. Ohogami, Properties of aluminium-coated steels for hot-forming, Nippon Steel Technical Report No. 88, July 2003.

[4] L.G. Aranda, P. Ravier, Y. Chastel, Hot stamping of quenchable steels: material data and process simulations, in: Proceedings of the IDDRG 2003 Conf., 2003, pp. 164–166.

[5] D. Lorenz, K. Roll, Modelling and analysis of integrated hotforming and quenching processes, in: Proceedings of the Sheet Metal 2005 Conf., 2005, pp. 787–794.
[6] P. Hein, A global approach of the finite element simulation of hot stamping, in: Proceedings of the Sheet Metal 2005 Conf., 2005, pp. 763–770.
[7] M. Geiger, M. Merklein, Determination of forming limit diagrams—a new analysis method for characterization of materials formability, Ann. CIRP 52 (1) (2003) 213.
[8] M. Turcato, A. Turetta, A. Ghiotti, Macchina per prove di formabilità di lamiere in temperatura: progetto e collaudo, Internal Report, DIMEG, 2006.

Ex. 2023
IPR2024-01376