US 20050021103A1

(19) United States

(12) Patent Application Publication

(10) Pub. No.: US 2005/0021103 A1

(43) Pub. Date: Jan. 27, 2005

DiLorenzo

(54) **APPARATUS AND METHOD FOR CLOSED-LOOP INTRACRANIAL STIMULATION FOR OPTIMAL CONTROL OF NEUROLOGICAL DISEASE**

(76) Inventor: **Daniel John DiLorenzo**, Ft. Washington, MD (US)

Correspondence Address:
Lloyd W. Sadler
Parsons Behle & Latimer
Suite 1800
201 South Main Street
Salt Lake City, UT 84111 (US)

(21) Appl. No.: **10/718,248**

(22) Filed: **Nov. 20, 2003**

Related U.S. Application Data

(63) Continuation of application No. 09/340,326, filed on Jun. 25, 1999, now Pat. No. 6,366,813.

(60) Provisional application No. 60/436,792, filed on Dec. 27, 2002. Provisional application No. 60/427,699, filed on Nov. 20, 2002. Provisional application No. 60/095,413, filed on Aug. 5, 1998.

Publication Classification

(51) **Int. Cl.**[7] **A61N 1/18**

(52) **U.S. Cl.** **607/45**

(57) **ABSTRACT**

A neurological control system for modulating activity of any component or structure comprising the entirety or portion of the nervous system, or any structure interfaced thereto, generally referred to herein as a "nervous system component." The neurological control system generates neural modulation signals delivered to a nervous system component through one or more intracranial (IC) stimulating electrodes in accordance with treatment parameters. Such treatment parameters may be derived from a neural response to previously delivered neural modulation signals sensed by one or more sensors, each configured to sense a particular characteristic indicative of a neurological or psychiatric condition.

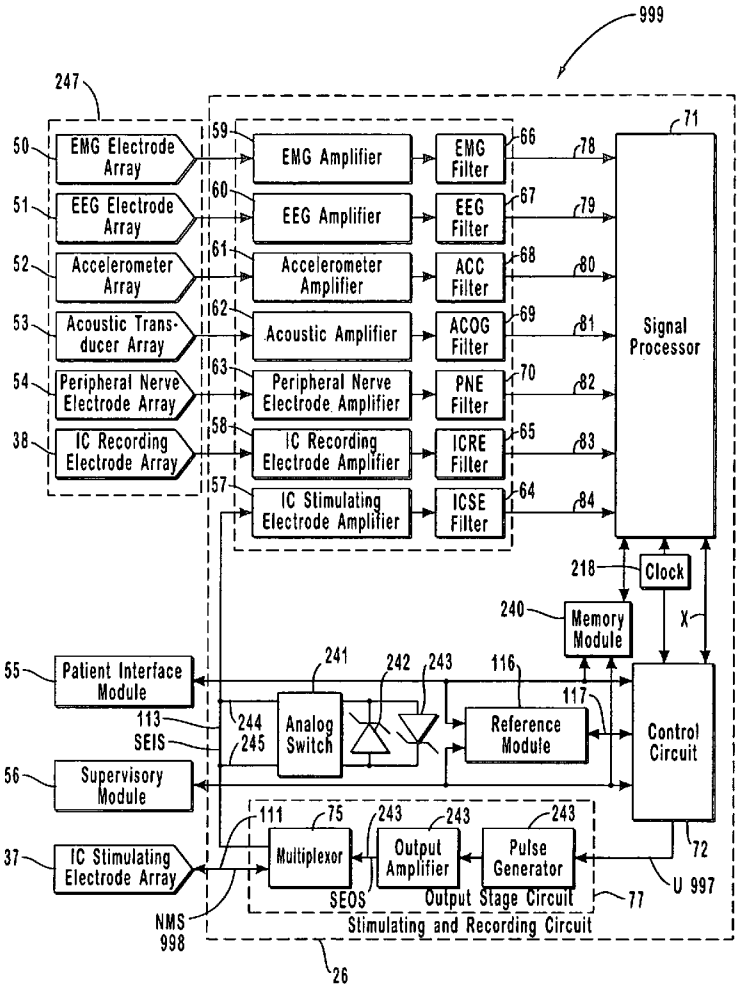

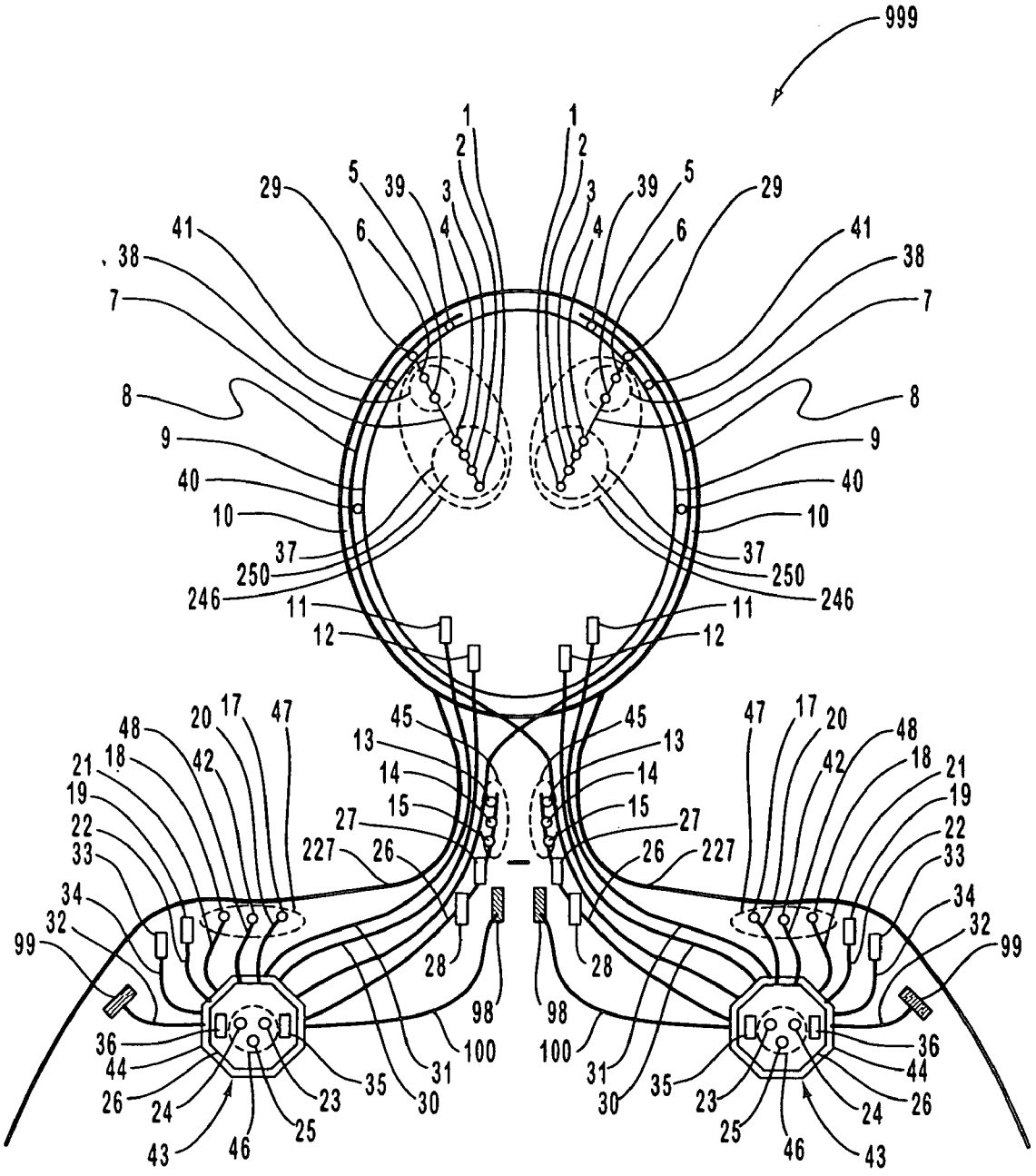
999
1
2
3
4
5
6
7
8
9
10
11
12
13
14
15
17
18
19
20
21
22
23
24
25
26
27
28
29
30
31
32
33
34
35
36
37
38
39
40
41
42
43
44
45
46
47
48
98
99
100
227
246
250

FIG. 1

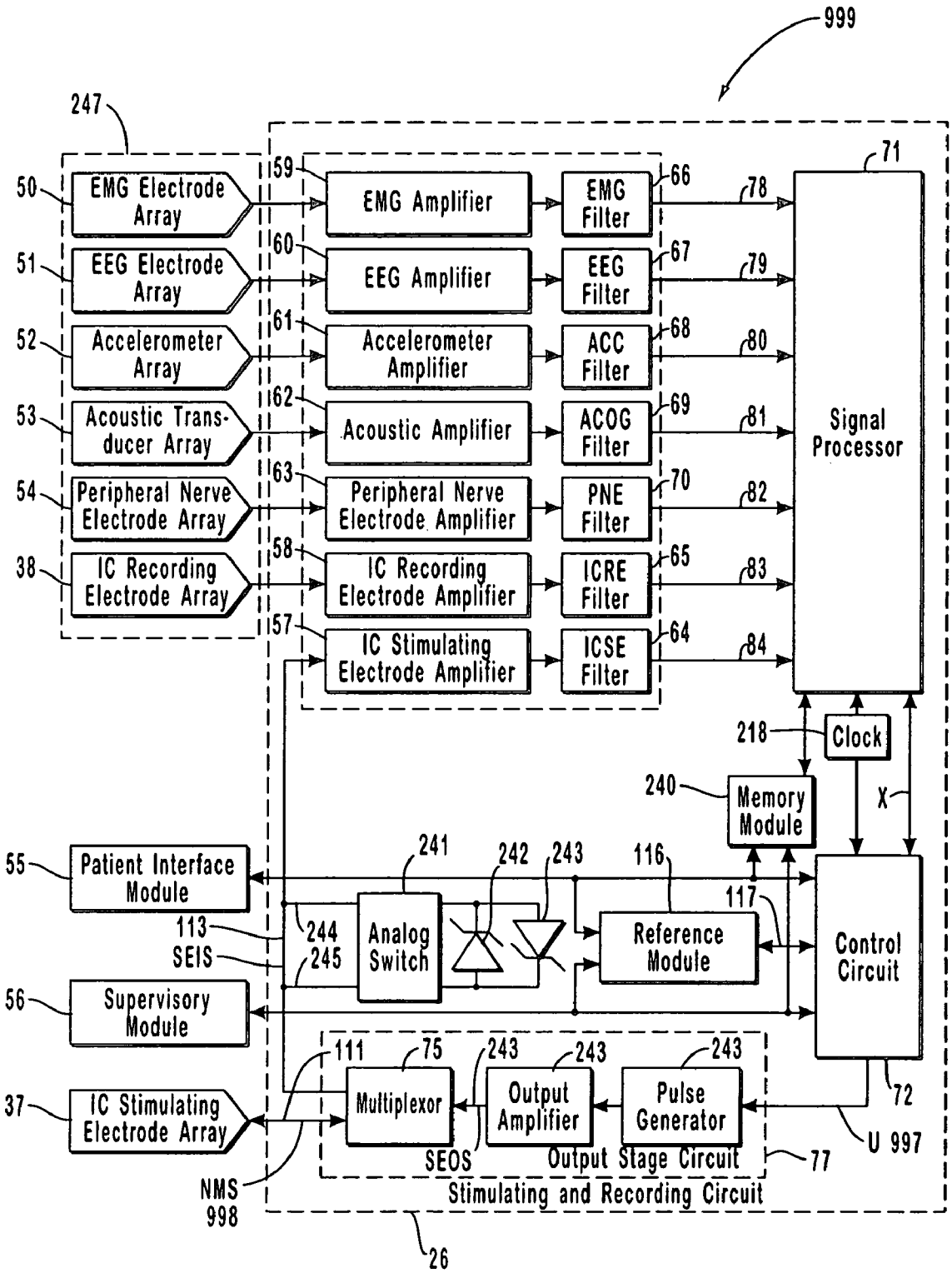
999
247
50
EMG Electrode Array
51
EEG Electrode Array
52
Accelerometer Array
53
Acoustic Transducer Array
54
Peripheral Nerve Electrode Array
38
IC Recording Electrode Array
59
EMG Amplifier
60
EEG Amplifier
61
Accelerometer Amplifier
62
Acoustic Amplifier
63
Peripheral Nerve Electrode Amplifier
58
IC Recording Electrode Amplifier
57
IC Stimulating Electrode Amplifier
66
EMG Filter
67
EEG Filter
68
ACC Filter
69
ACOG Filter
70
PNE Filter
65
ICRE Filter
64
ICSE Filter
78
79
80
81
82
83
84
71
Signal Processor
218
Clock
240
Memory Module
X
55
Patient Interface Module
241
242
243
116
117
113
SEIS
244
245
Analog Switch
Reference Module
Control Circuit
56
Supervisory Module
111
75
243
243
243
37
IC Stimulating Electrode Array
Multiplexor
Output Amplifier
Pulse Generator
72
U 997
SEOS
Output Stage Circuit
77
NMS 998
Stimulating and Recording Circuit
26

FIG. 2

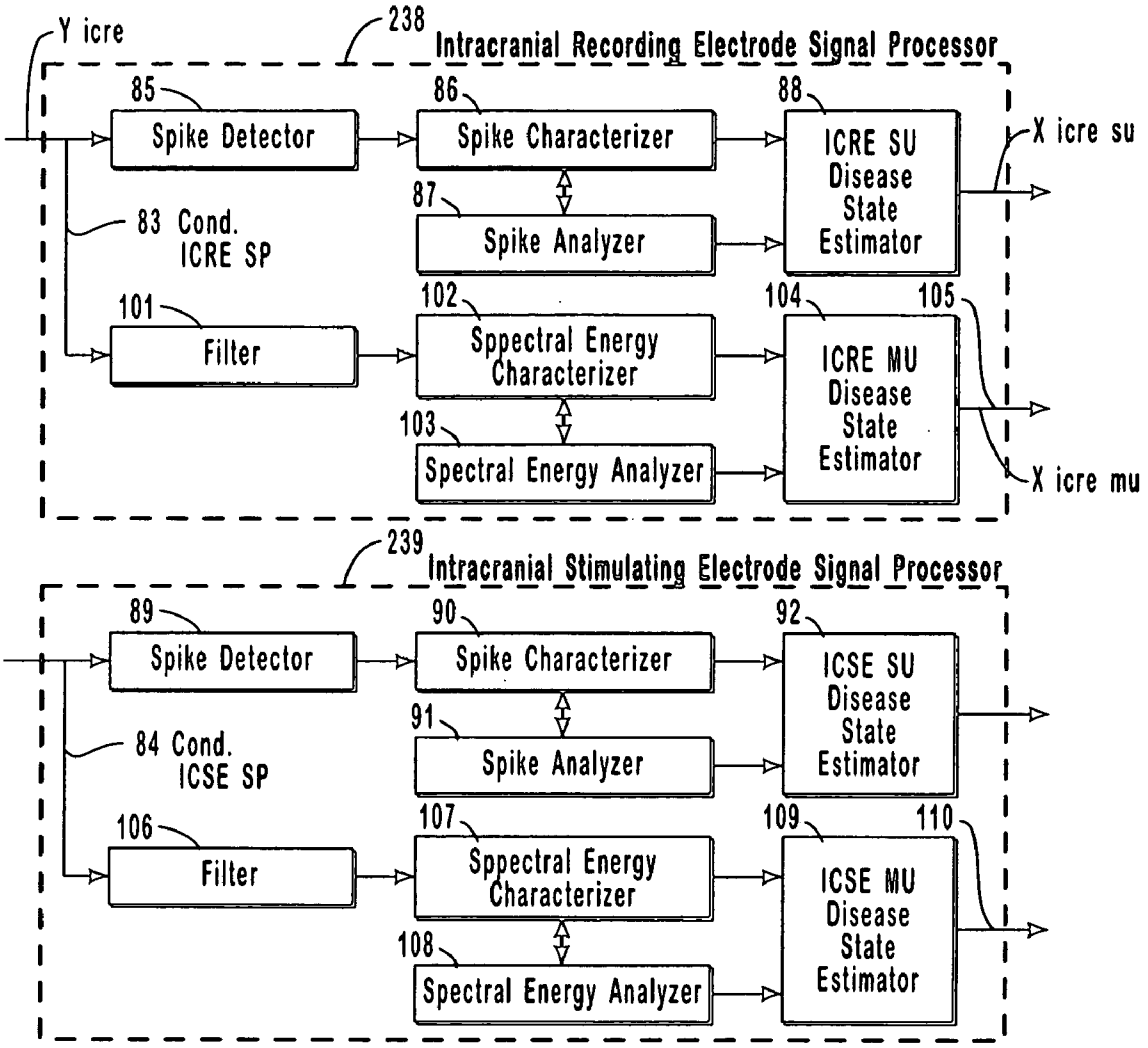
Y icre
238
Intracranial Recording Electrode Signal Processor
85
Spike Detector
86
Spike Characterizer
88
ICRE SU Disease State Estimator
X icre su
87
Spike Analyzer
83 Cond. ICRE SP
101
Filter
102
Sppectral Energy Characterizer
104
105
ICRE MU Disease State Estimator
103
Spectral Energy Analyzer
X icre mu
239
Intracranial Stimulating Electrode Signal Processor
89
Spike Detector
90
Spike Characterizer
92
ICSE SU Disease State Estimator
91
Spike Analyzer
84 Cond. ICSE SP
106
Filter
107
Sppectral Energy Characterizer
109
110
ICSE MU Disease State Estimator
108
Spectral Energy Analyzer

FIG. 3

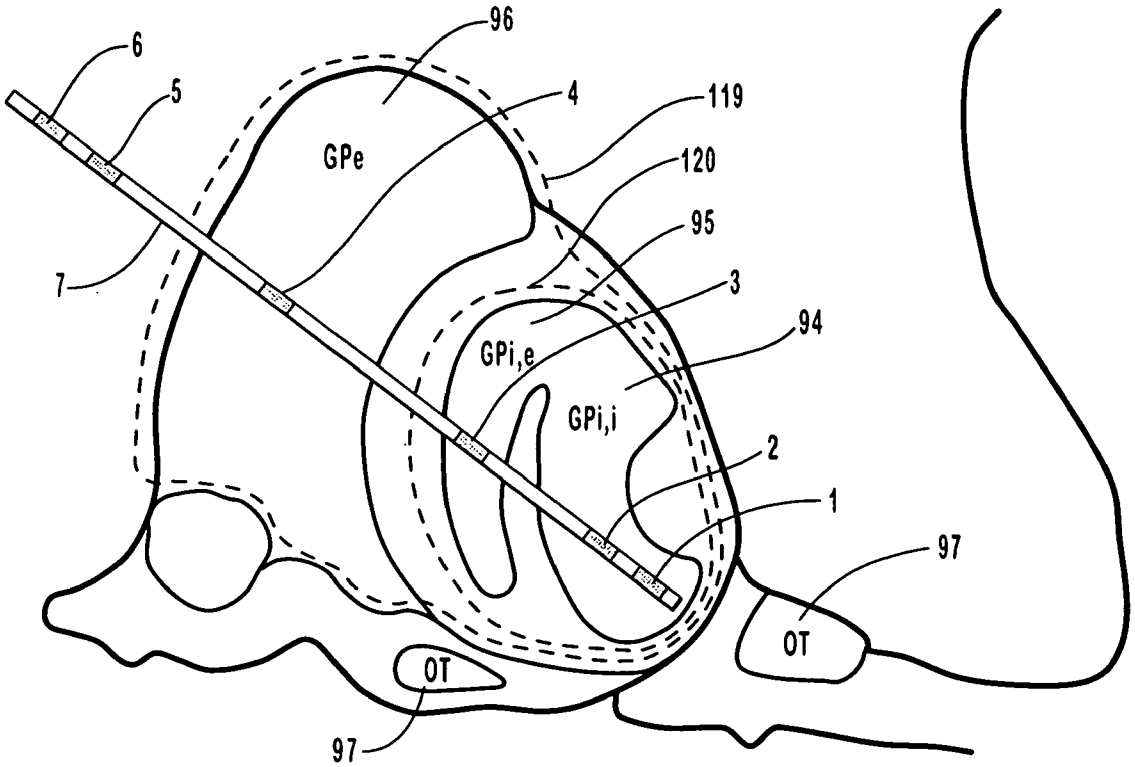

FIG. 4

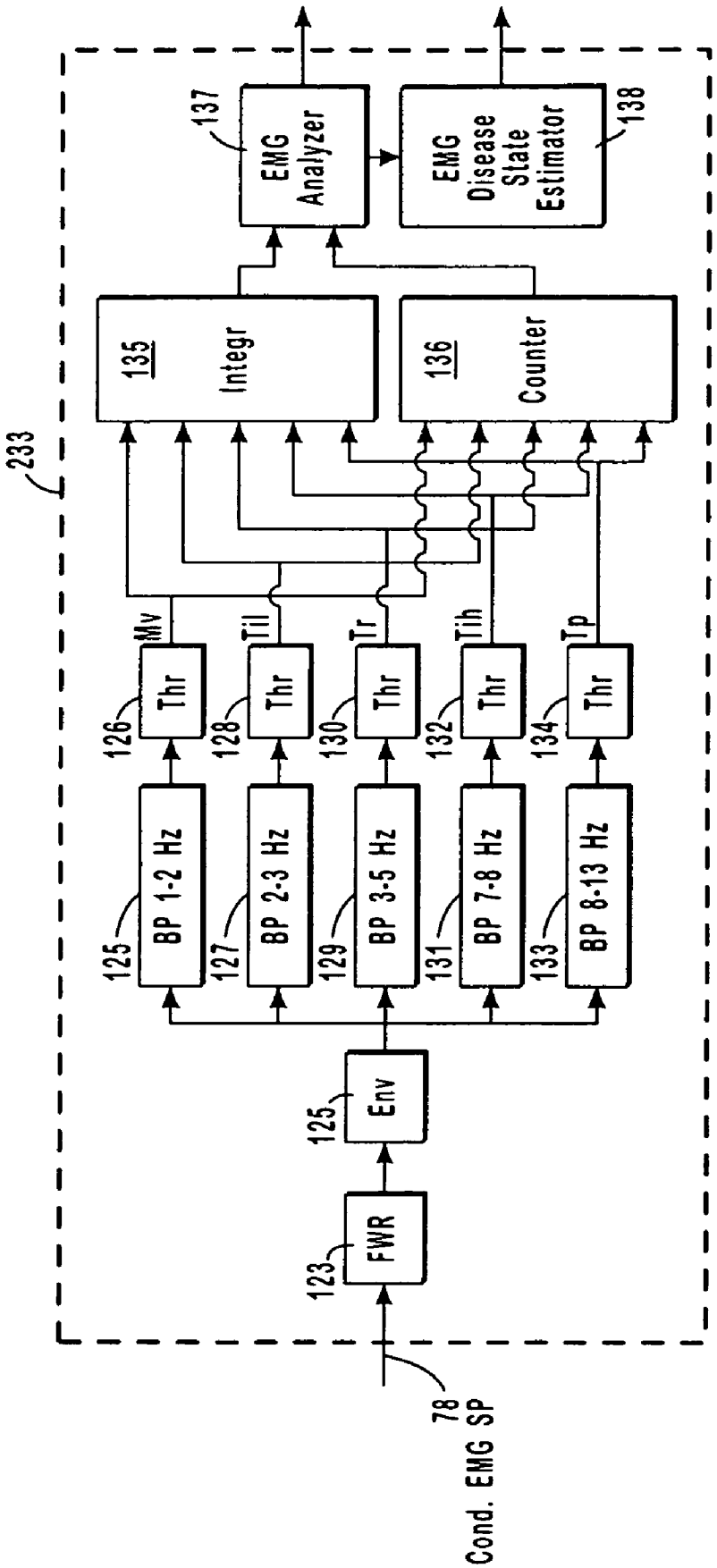
233
78
Cond. EMG SP
123
FWR
125
Env
125
BP 1-2 Hz
127
BP 2-3 Hz
129
BP 3-5 Hz
131
BP 7-8 Hz
133
BP 8-13 Hz
126
Thr
128
Thr
130
Thr
132
Thr
134
Thr
Mv
Til
Tr
Tih
Tp
135
Integr
136
Counter
137
EMG Analyzer
138
EMG Disease State Estimator

FIG. 5

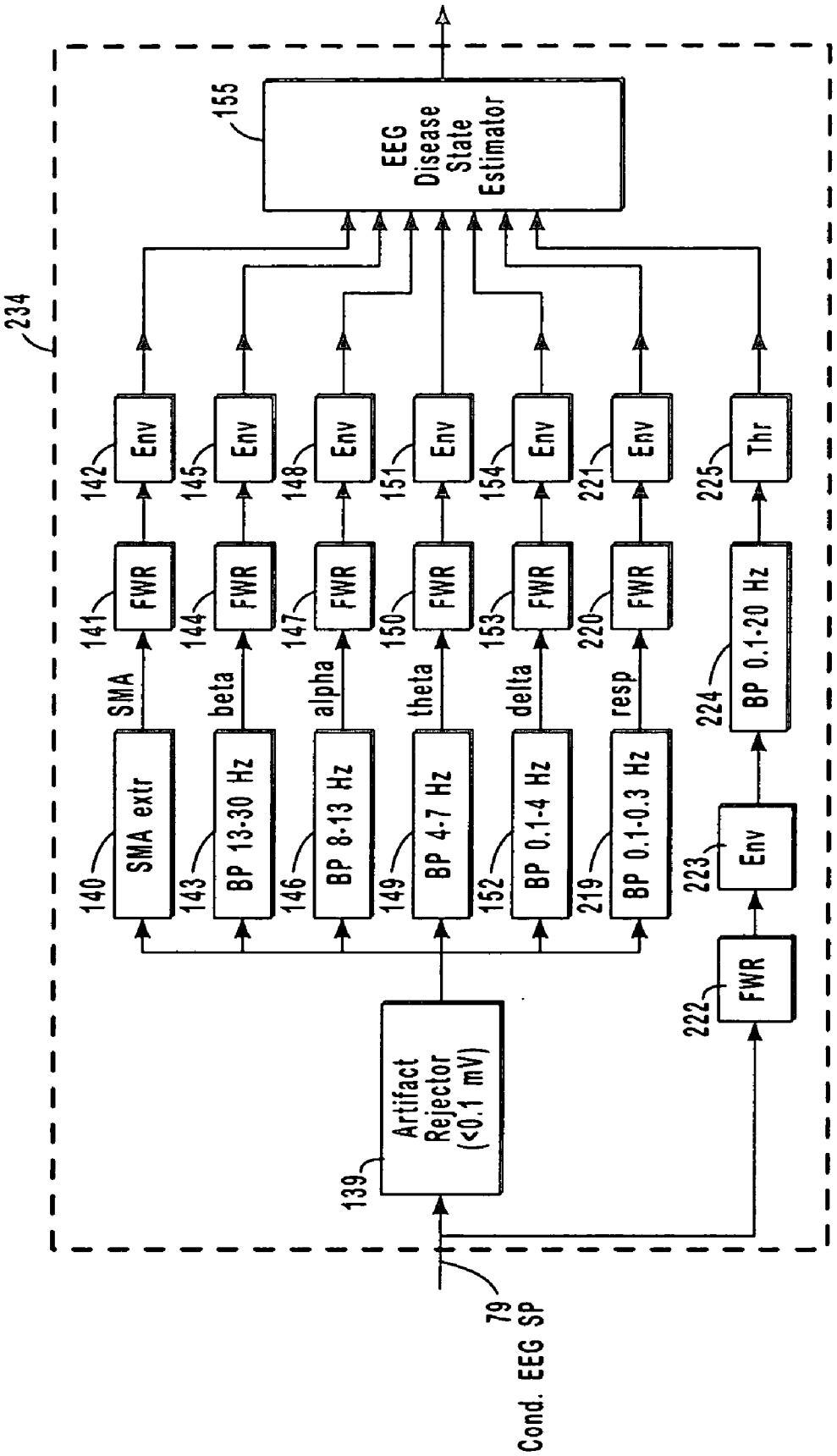
234
155
EEG Disease State Estimator
142
Env
141
FWR
SMA
140
SMA extr
145
Env
144
FWR
beta
143
BP 13-30 Hz
148
Env
147
FWR
alpha
146
BP 8-13 Hz
151
Env
150
FWR
theta
149
BP 4-7 Hz
154
Env
153
FWR
delta
152
BP 0.1-4 Hz
221
Env
220
FWR
resp
219
BP 0.1-0.3 Hz
225
Thr
224
BP 0.1-20 Hz
223
Env
222
FWR
139
Artifact Rejector (<0.1 mV)
79
Cond. EEG SP

FIG. 6

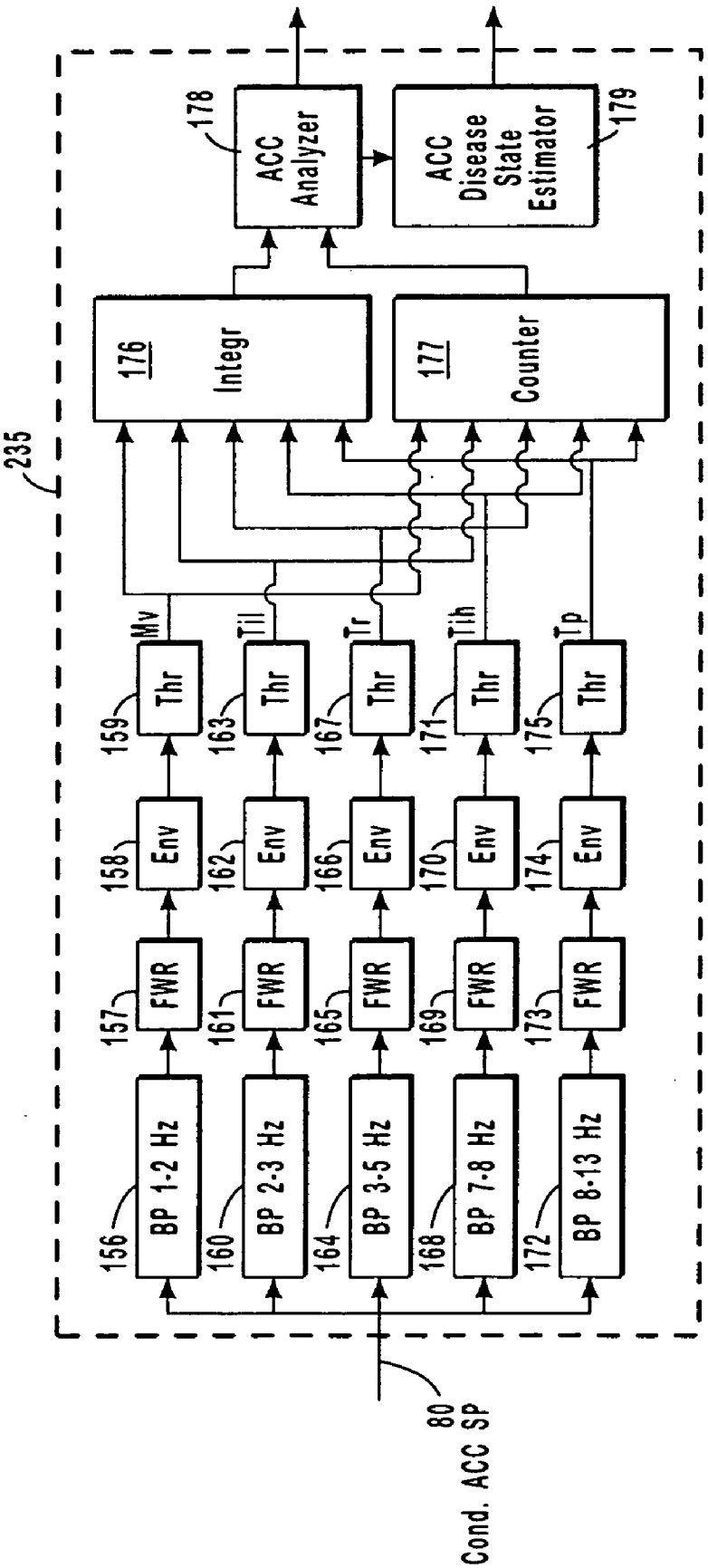
235
156
BP 1-2 Hz
157
FWR
158
Env
159
Thr
160
BP 2-3 Hz
161
FWR
162
Env
163
Thr
164
BP 3-5 Hz
165
FWR
166
Env
167
Thr
168
BP 7-8 Hz
169
FWR
170
Env
171
Thr
172
BP 8-13 Hz
173
FWR
174
Env
175
Thr
Mv
Til
Tr
Tih
Tp
176
Integr
177
Counter
178
ACC Analyzer
179
ACC Disease State Estimator
80
Cond. ACC SP

FIG. 7

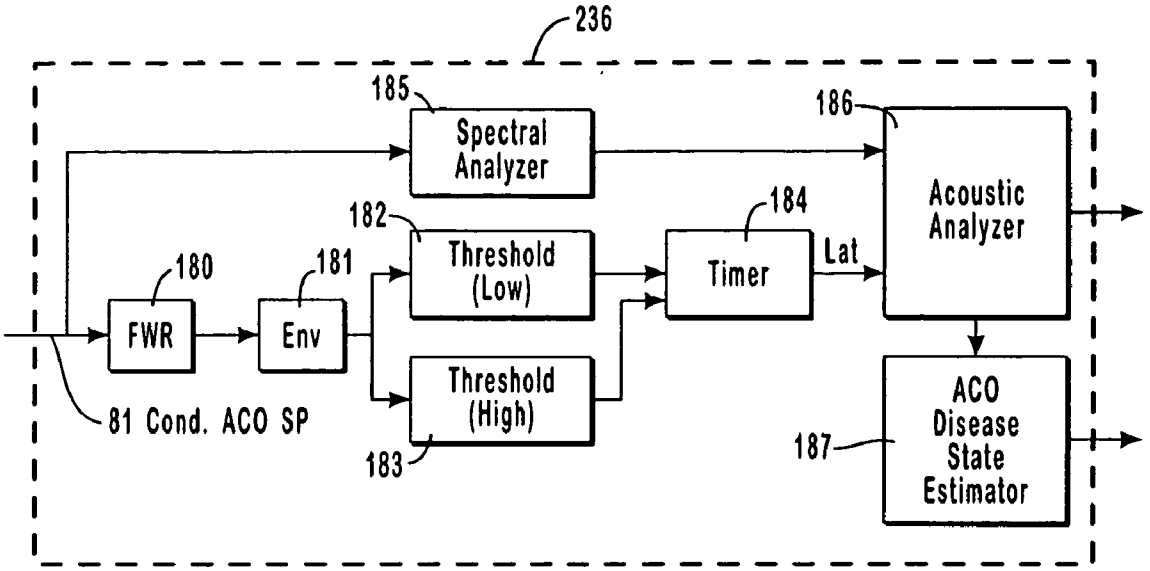
236
185
Spectral Analyzer
186
Acoustic Analyzer
182
Threshold (Low)
184
Timer
Lat
180
181
FWR
Env
Threshold (High)
81 Cond. ACO SP
183
187
ACO Disease State Estimator

FIG. 8

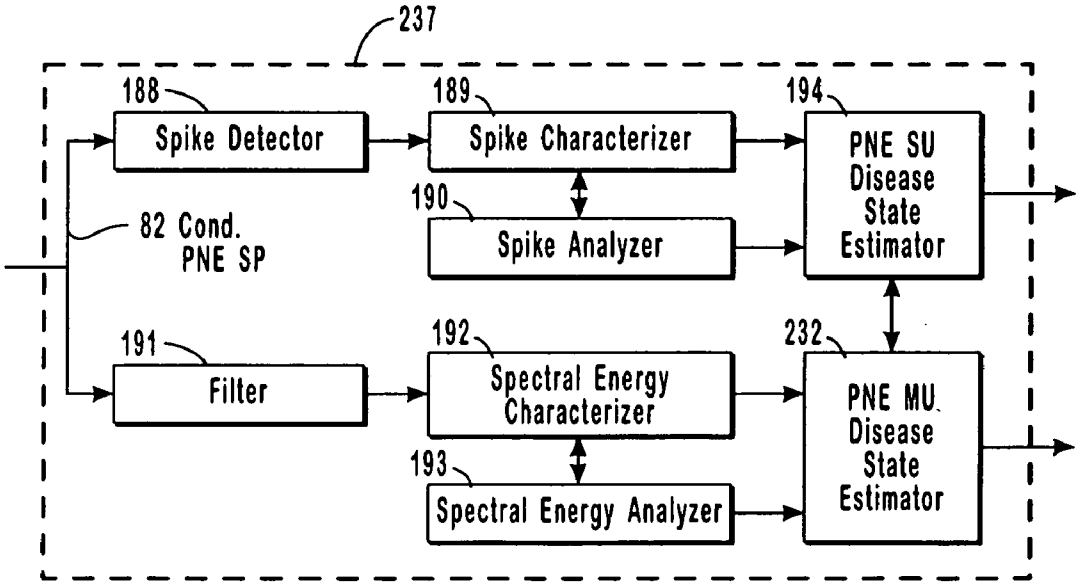
237
188
Spike Detector
189
Spike Characterizer
194
PNE SU Disease State Estimator
190
Spike Analyzer
82 Cond. PNE SP
191
Filter
192
Spectral Energy Characterizer
232
PNE MU Disease State Estimator
193
Spectral Energy Analyzer

FIG. 9

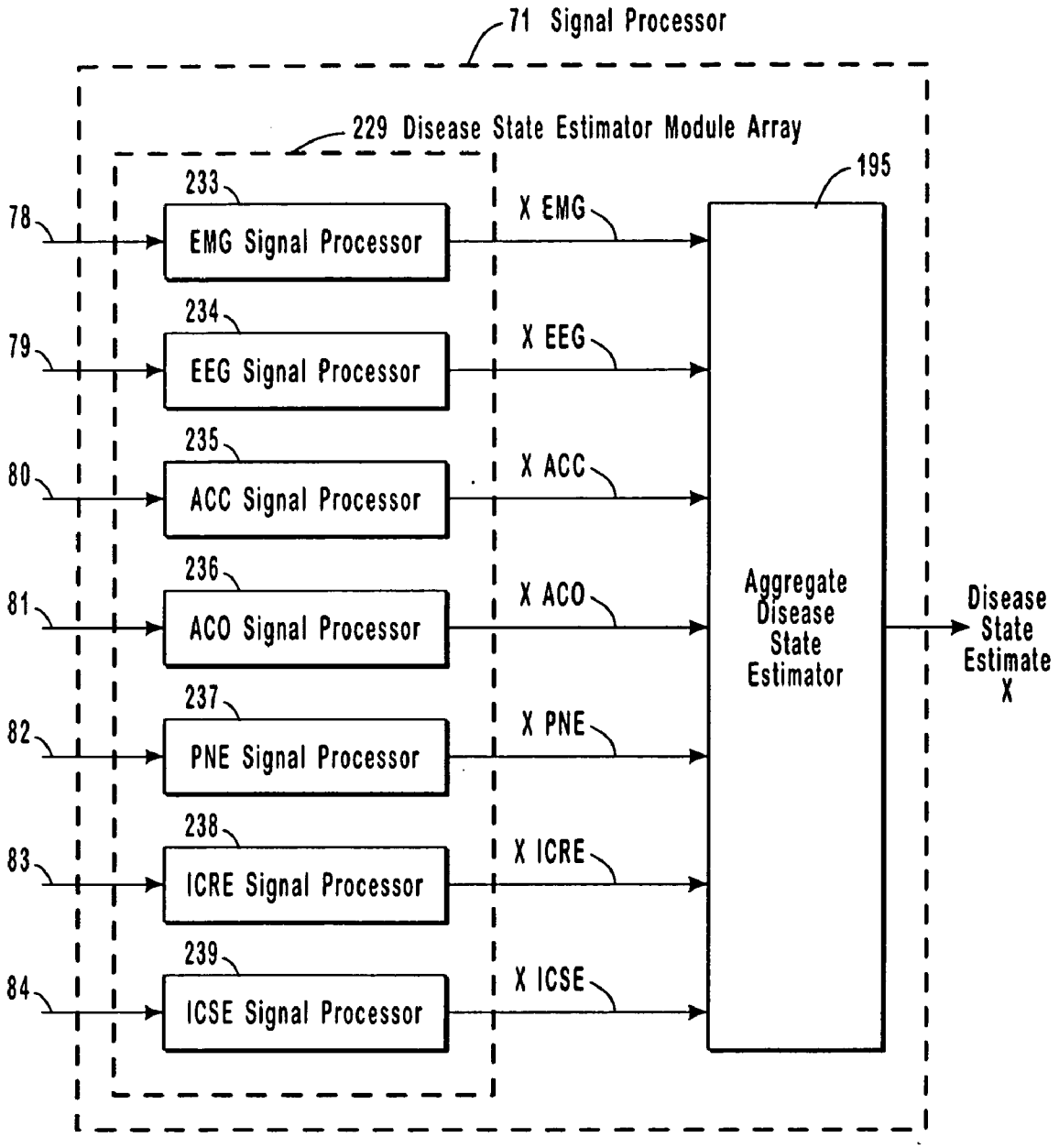
71 Signal Processor
229 Disease State Estimator Module Array
195
233
EMG Signal Processor
234
EEG Signal Processor
235
ACC Signal Processor
236
ACO Signal Processor
237
PNE Signal Processor
238
ICRE Signal Processor
239
ICSE Signal Processor
78
79
80
81
82
83
84
X EMG
X EEG
X ACC
X ACO
X PNE
X ICRE
X ICSE
Aggregate Disease State Estimator
Disease State Estimate X

FIG. 10

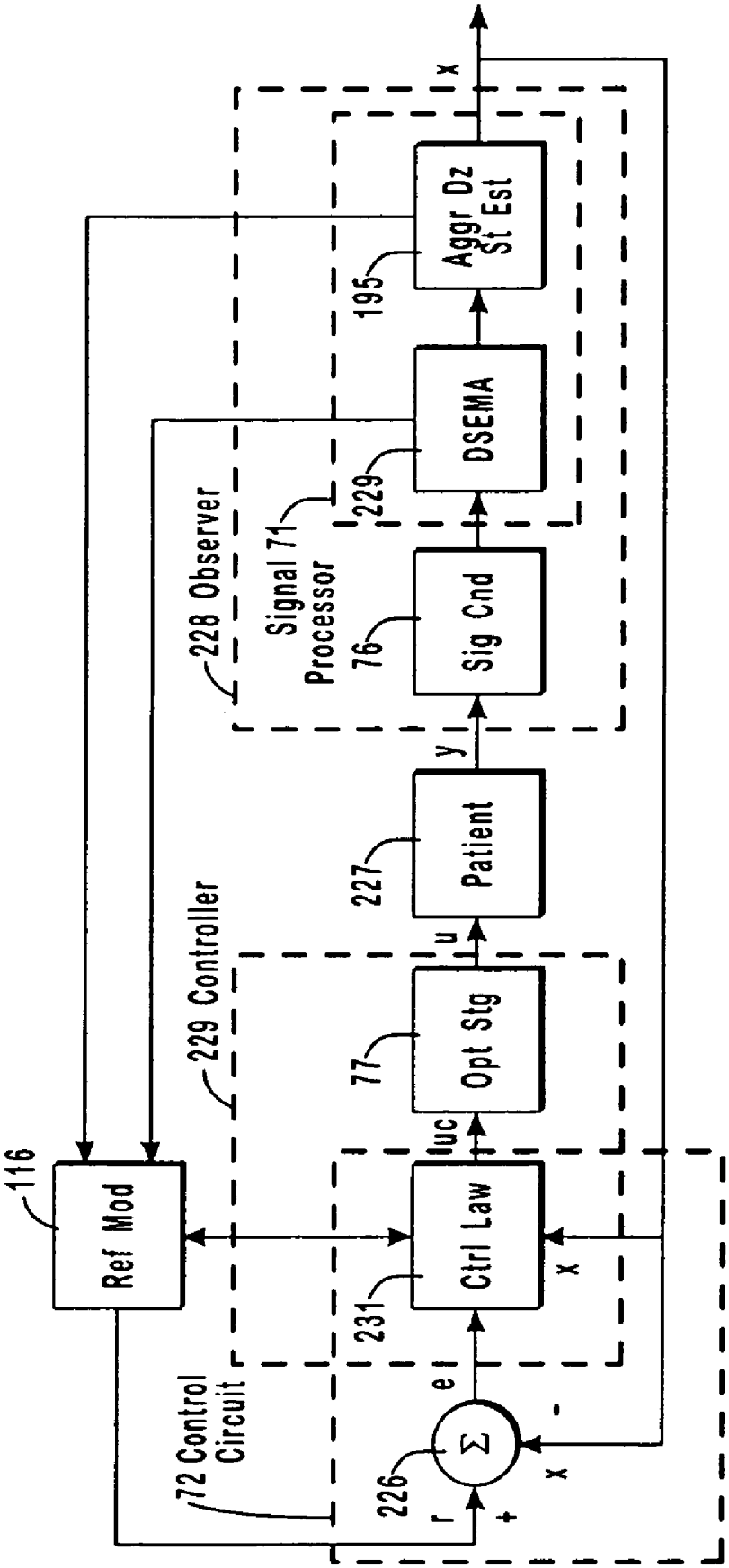
116
Ref Mod
72 Control Circuit
229 Controller
228 Observer
Signal 71 Processor
r
+
226
Σ
e
-
x
231
Ctrl Law
x
luc
77
Opt Stg
u
227
Patient
y
76
Sig Cnd
229
DSEMA
195
Aggr Dz St Est
x

FIG. 11

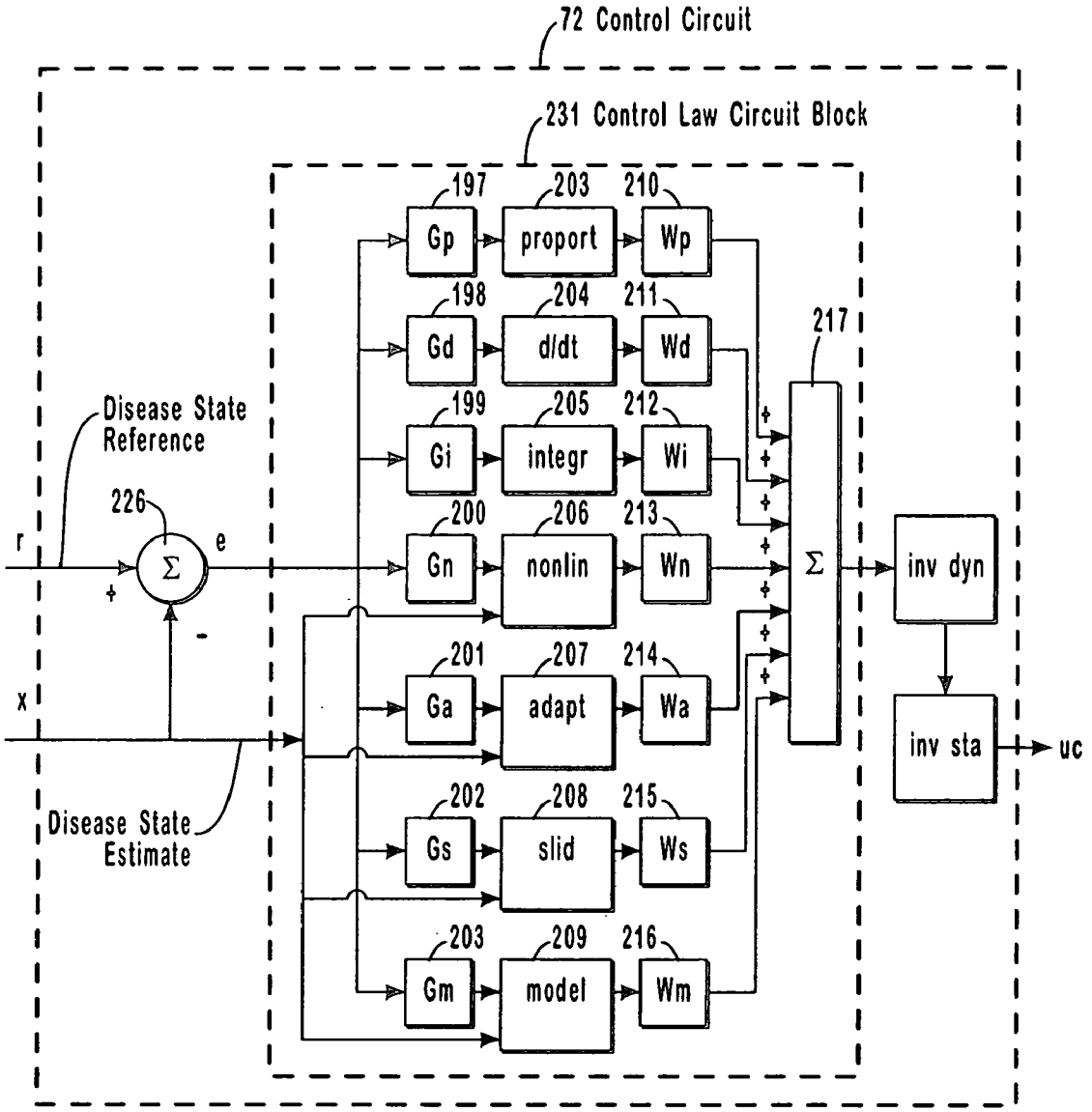
72 Control Circuit
231 Control Law Circuit Block
197
203
210
Gp
proport
Wp
198
204
211
Gd
d/dt
Wd
217
199
205
212
Gi
integr
Wi
200
206
213
Gn
nonlin
Wn
201
207
214
Ga
adapt
Wa
202
208
215
Gs
slid
Ws
203
209
216
Gm
model
Wm
Disease State Reference
226
r
e
x
Disease State Estimate
Σ
inv dyn
inv sta
uc

FIG. 12

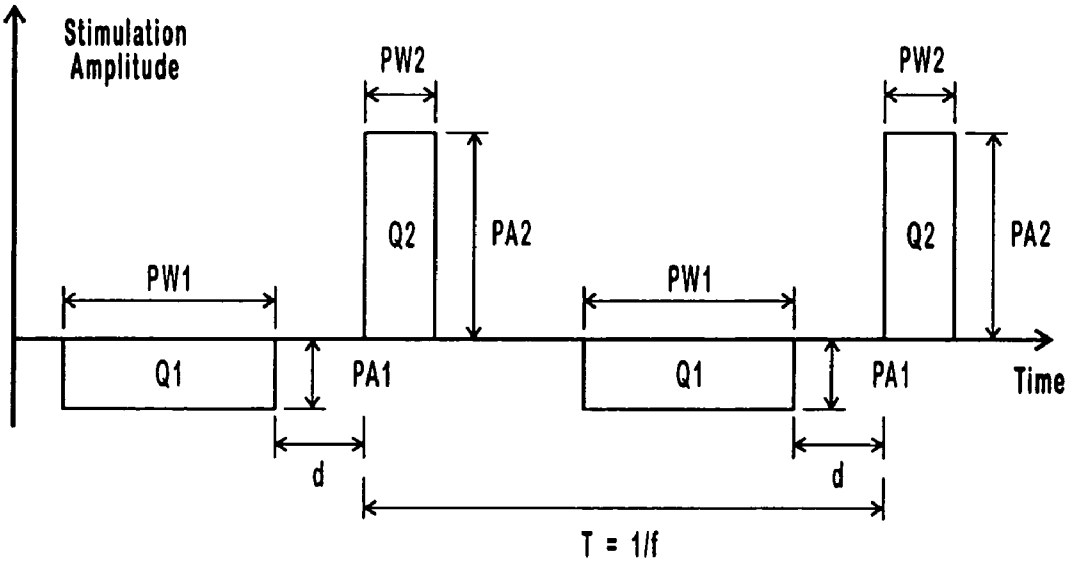
Stimulation Amplitude
PW2
PW2
Q2
PA2
Q2
PA2
PW1
PW1
Q1
PA1
Q1
PA1
Time
d
d
T = 1/f

FIG. 13

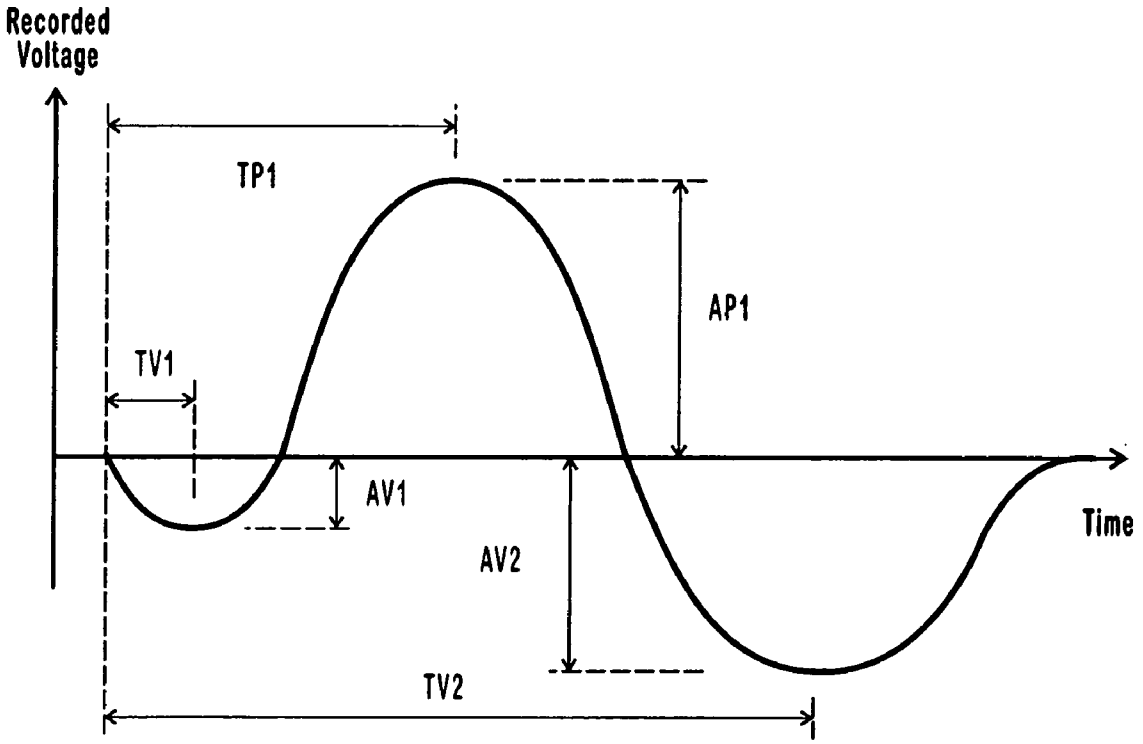
Recorded Voltage
TP1
AP1
TV1
AV1
AV2
Time
TV2

FIG. 14

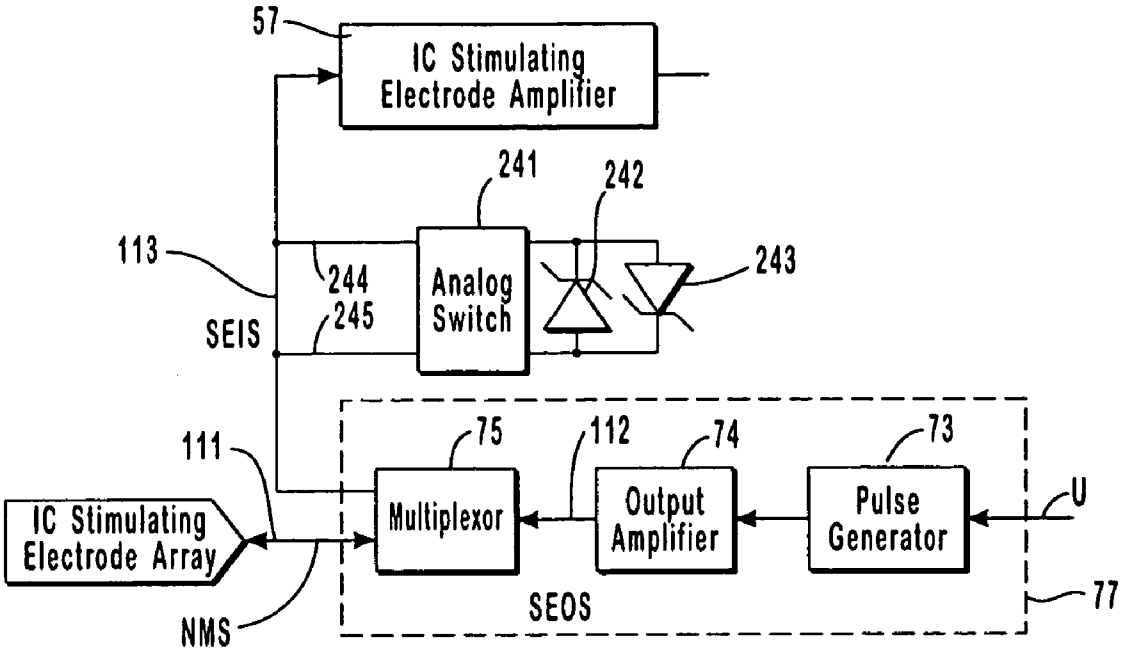
57
IC Stimulating Electrode Amplifier
241
242
113
244
245
SEIS
Analog Switch
243
111
75
112
74
73
IC Stimulating Electrode Array
Multiplexor
Output Amplifier
Pulse Generator
U
NMS
SEOS
77

FIG. 15

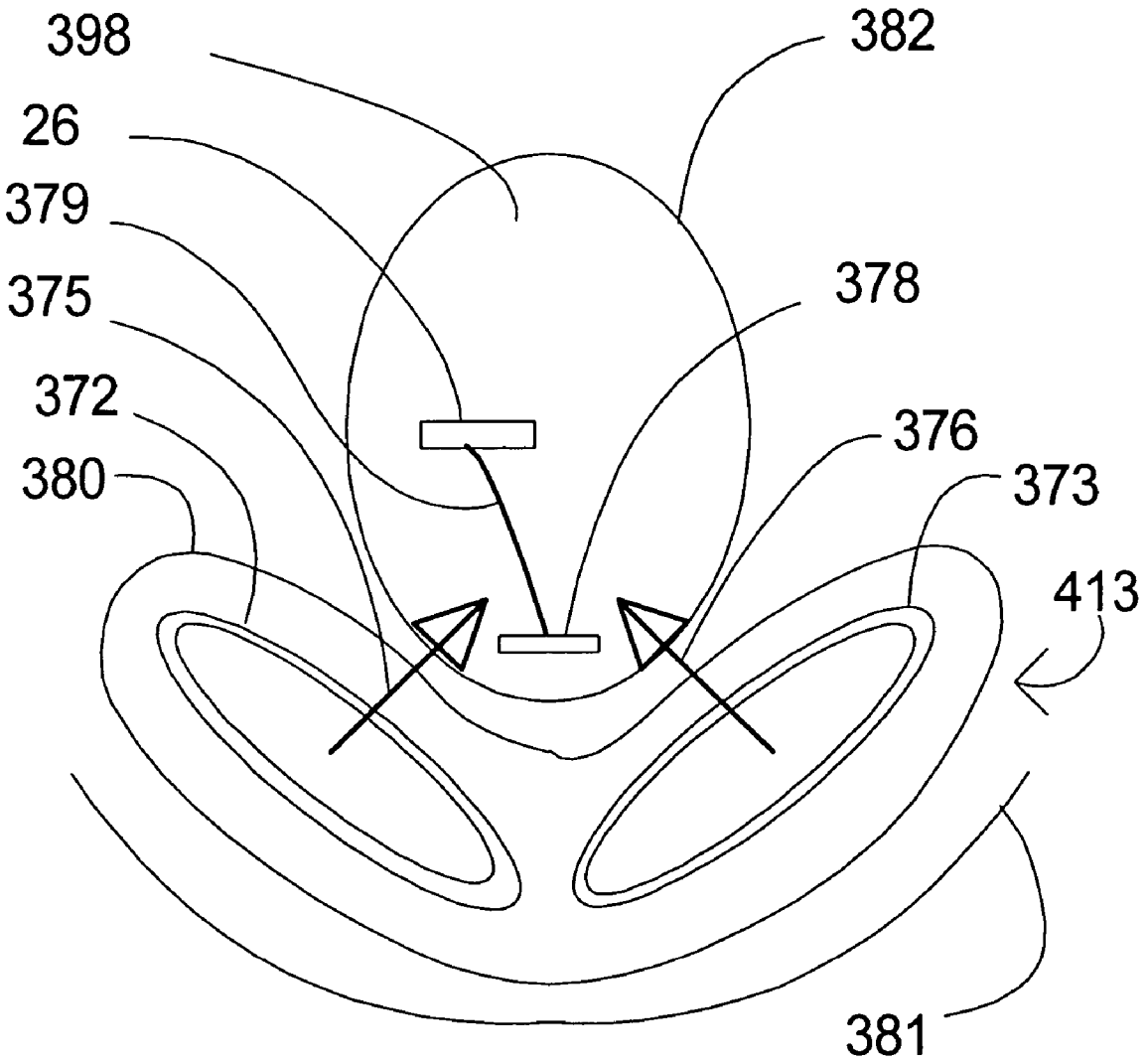

Figure 16

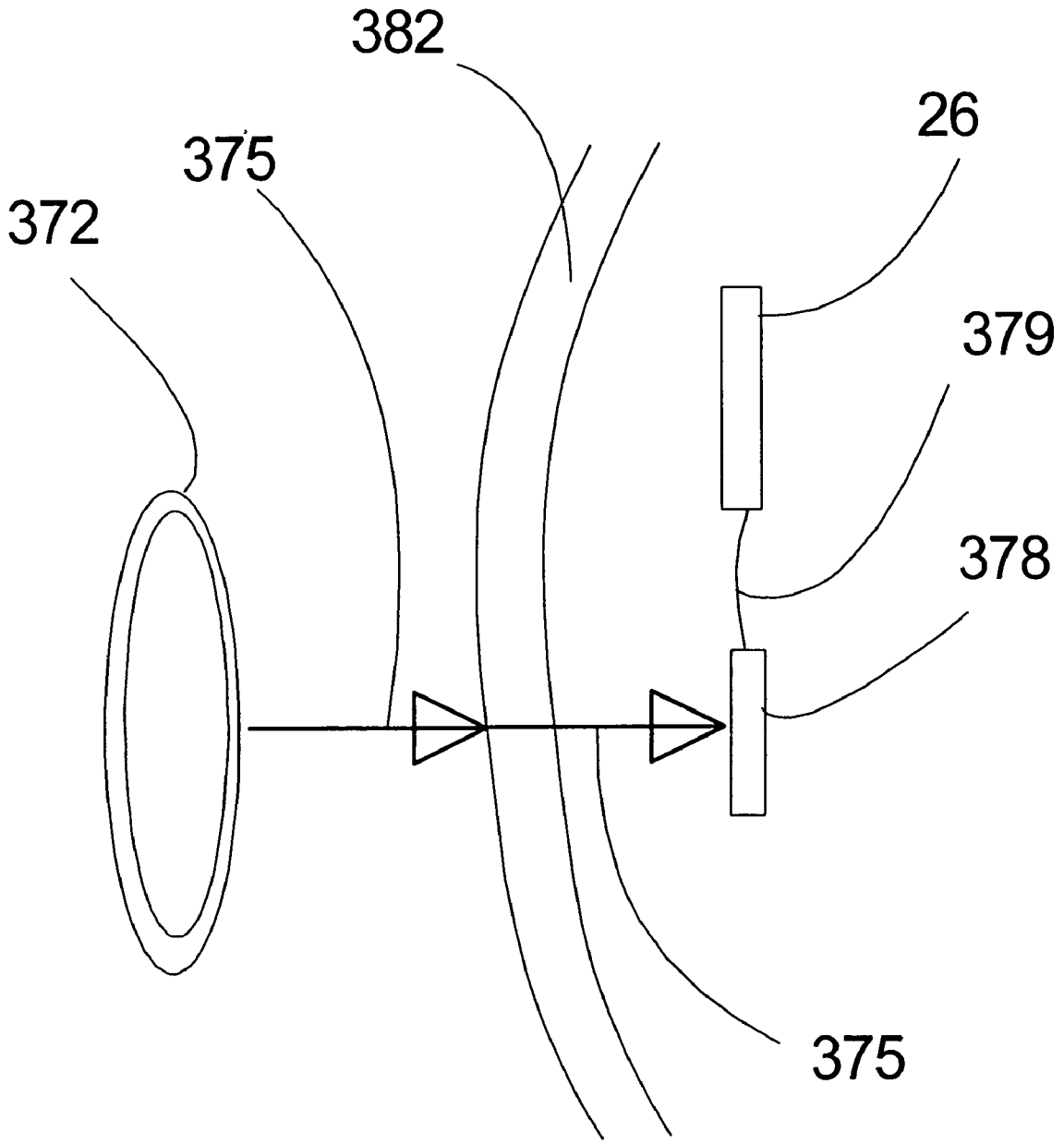

Figure 17

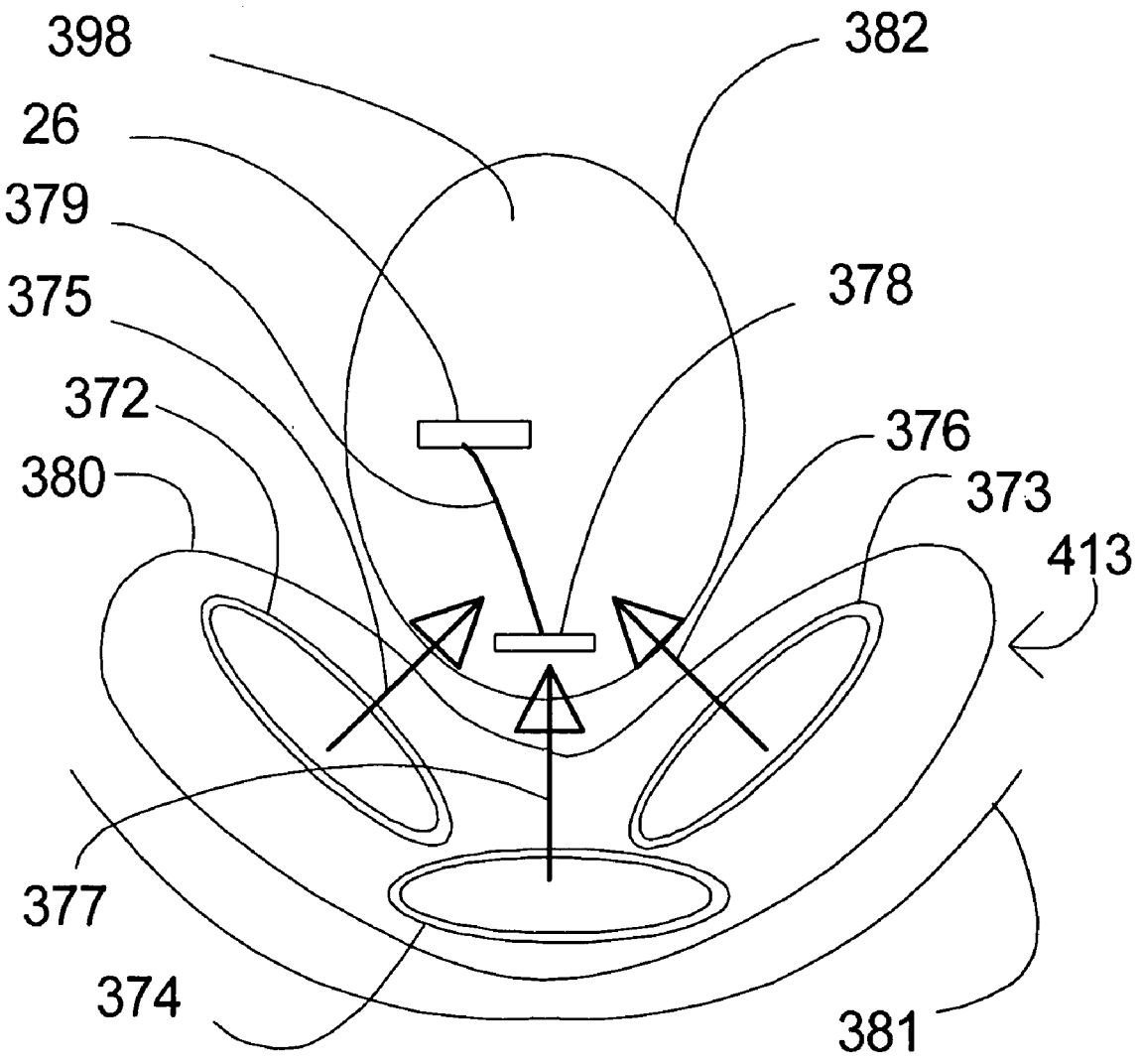

Figure 18

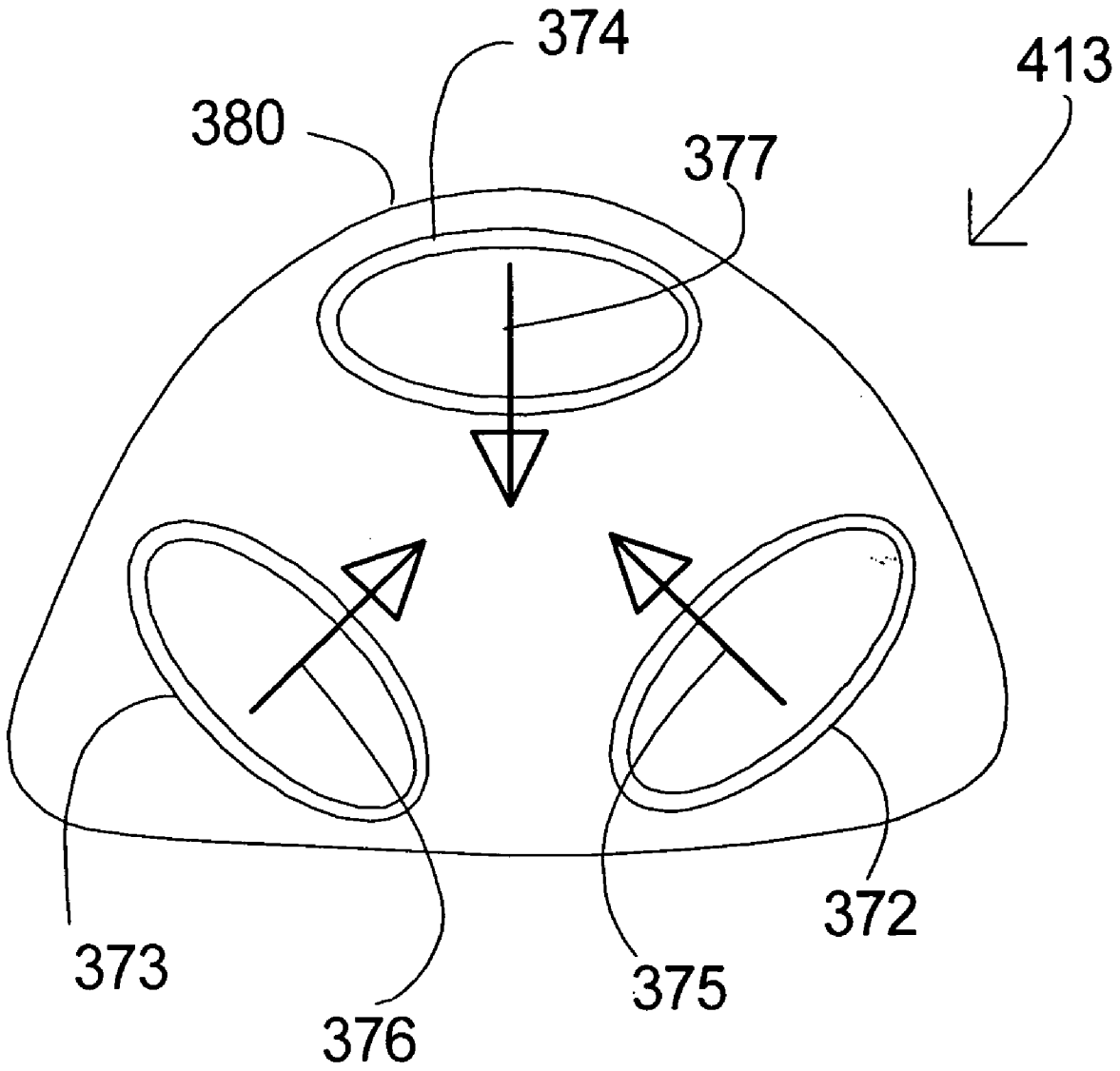

Figure 19

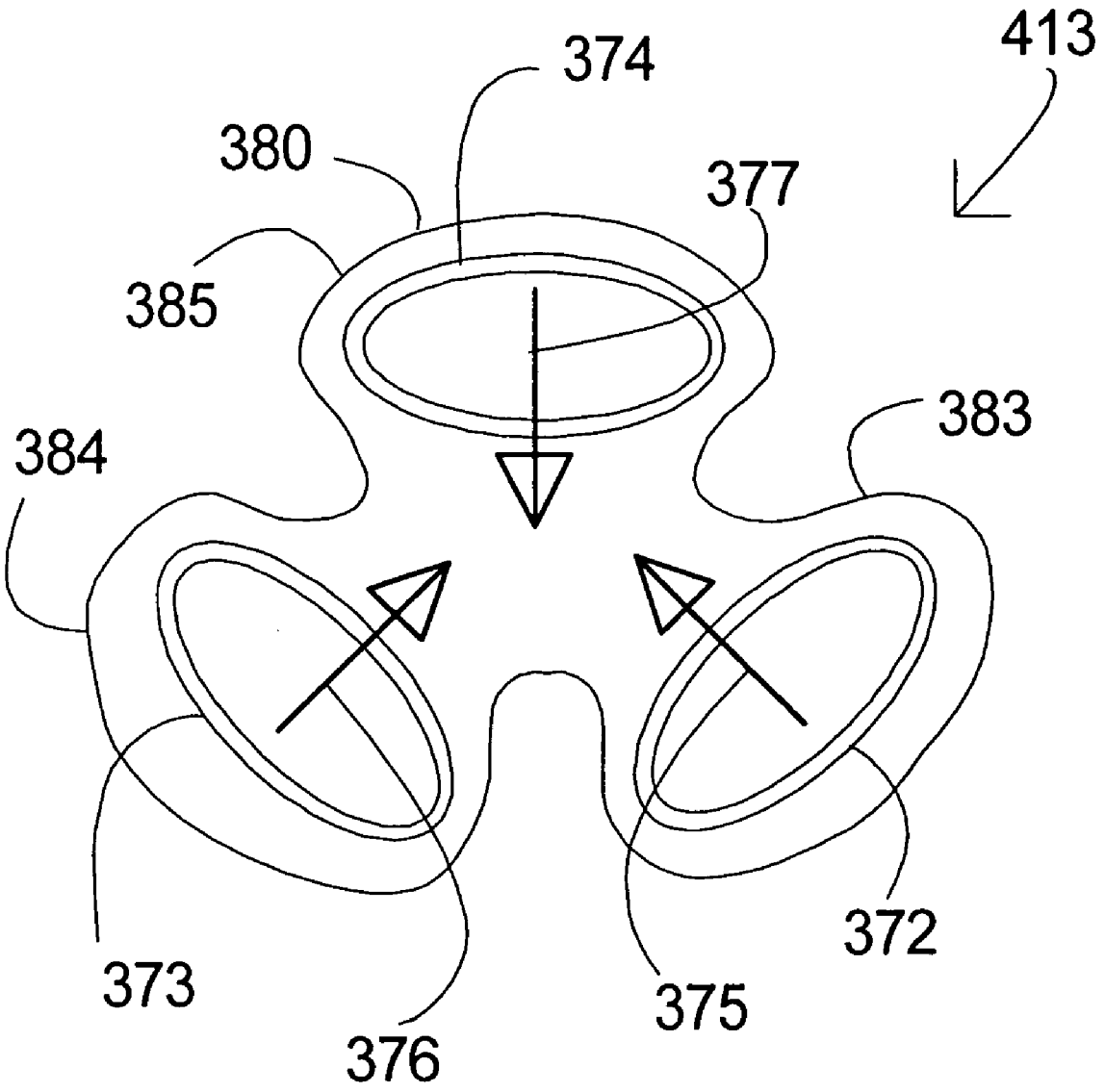

Figure 20

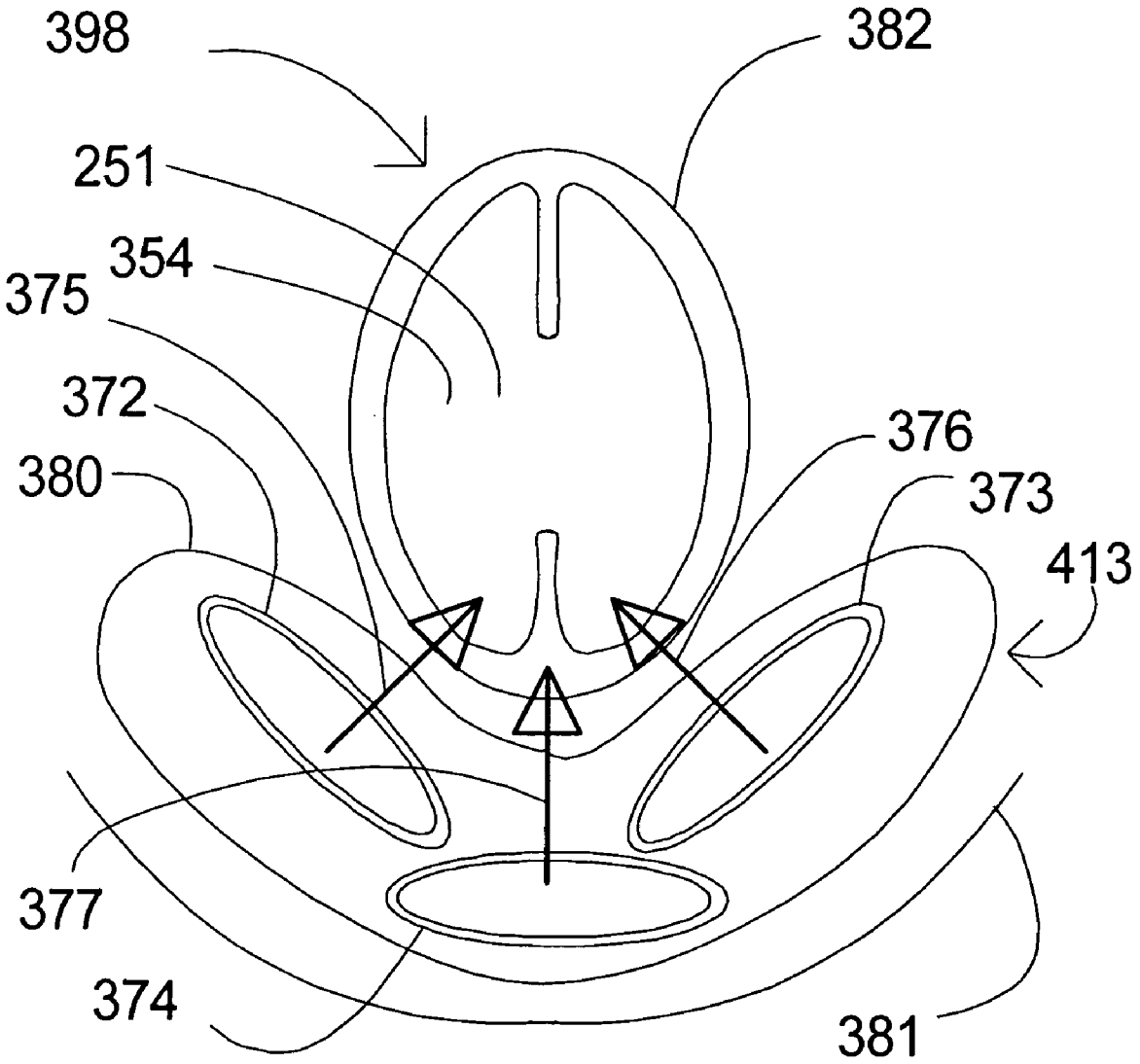

Figure 21

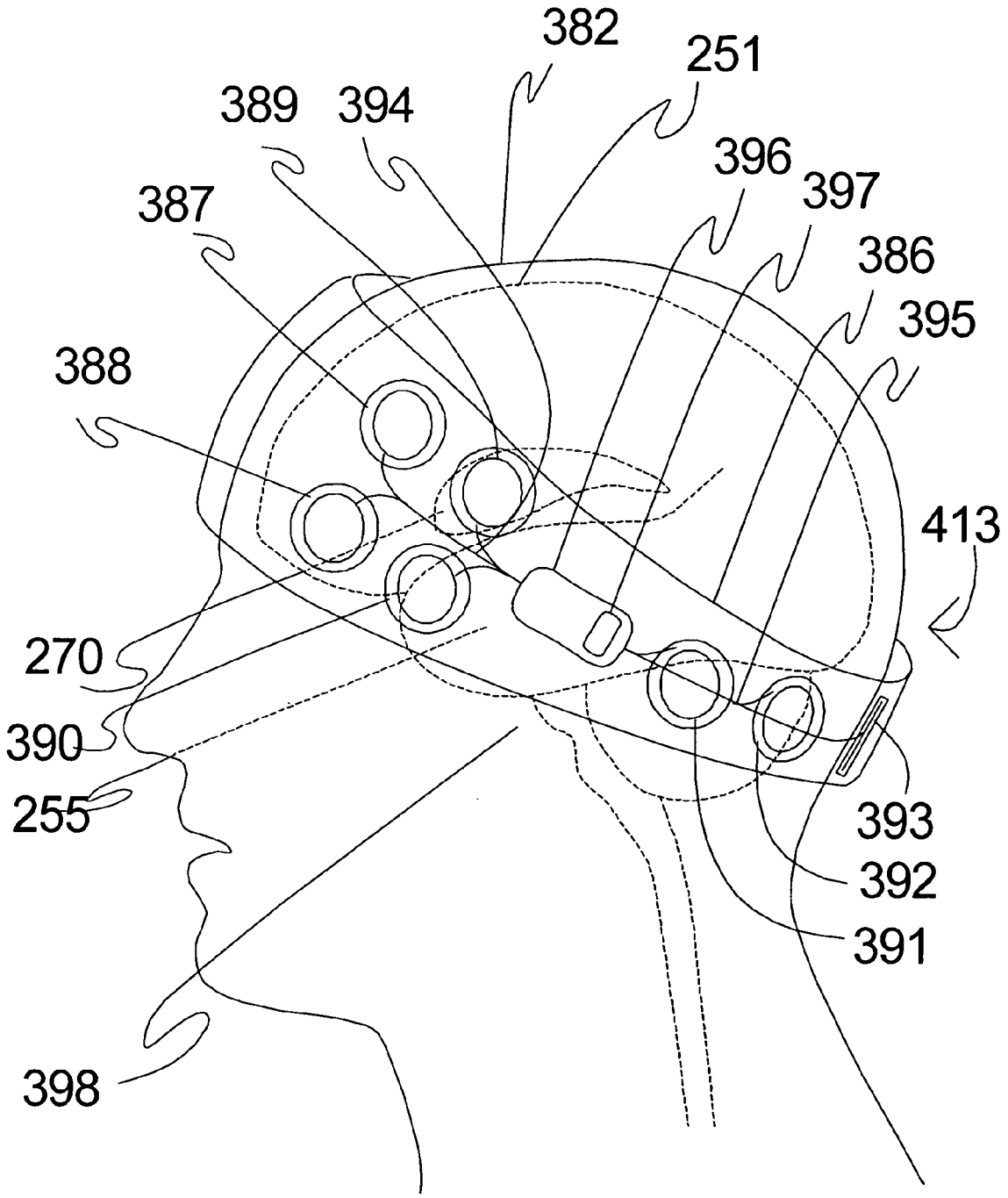
382
251
389
394
396
397
387
386
395
388
413
270
390
255
393
392
391
398

Figure 22

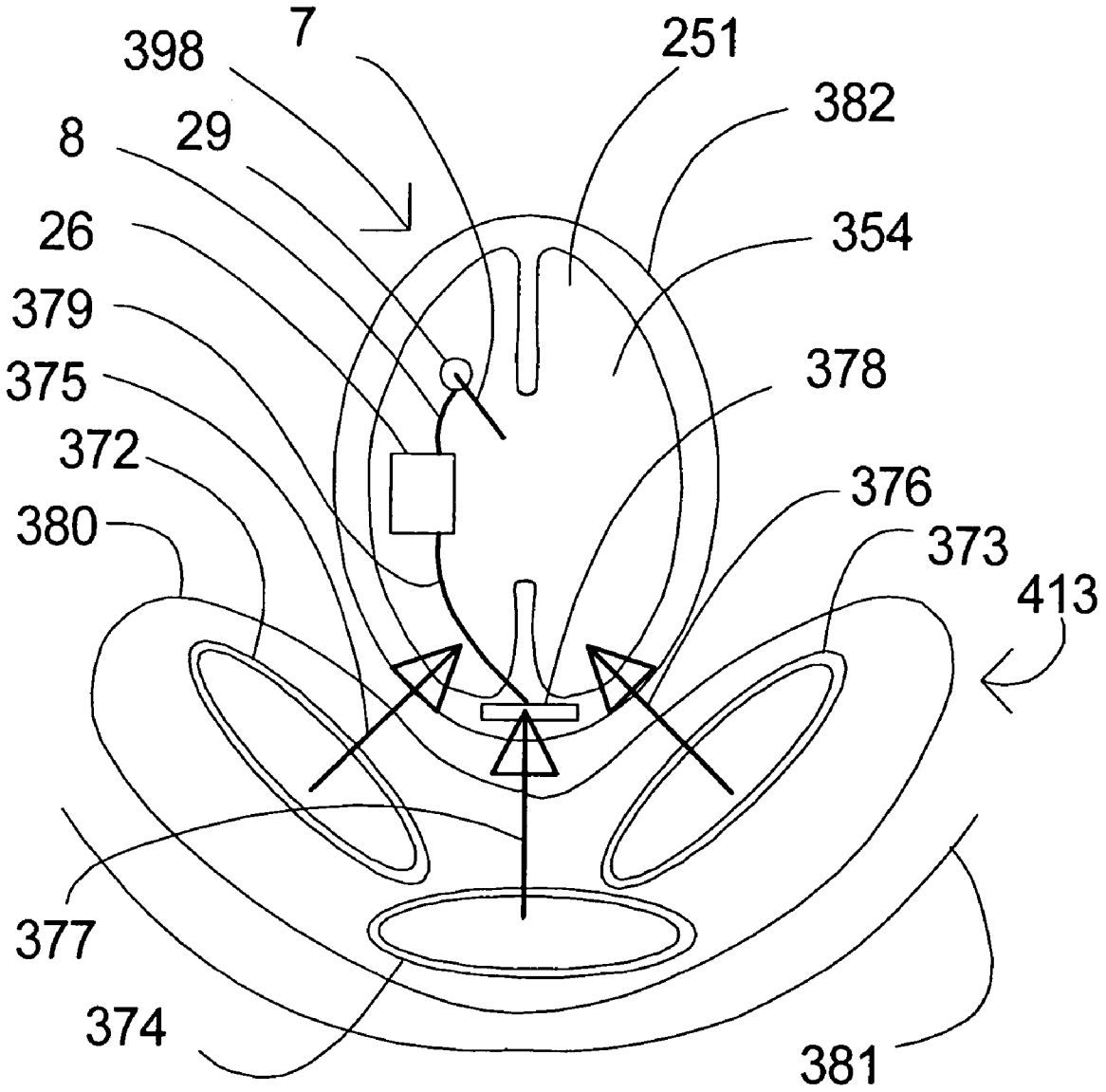
398
7
251
382
8
29
26
354
379
375
378
372
376
380
373
413
377
374
381

Figure 23

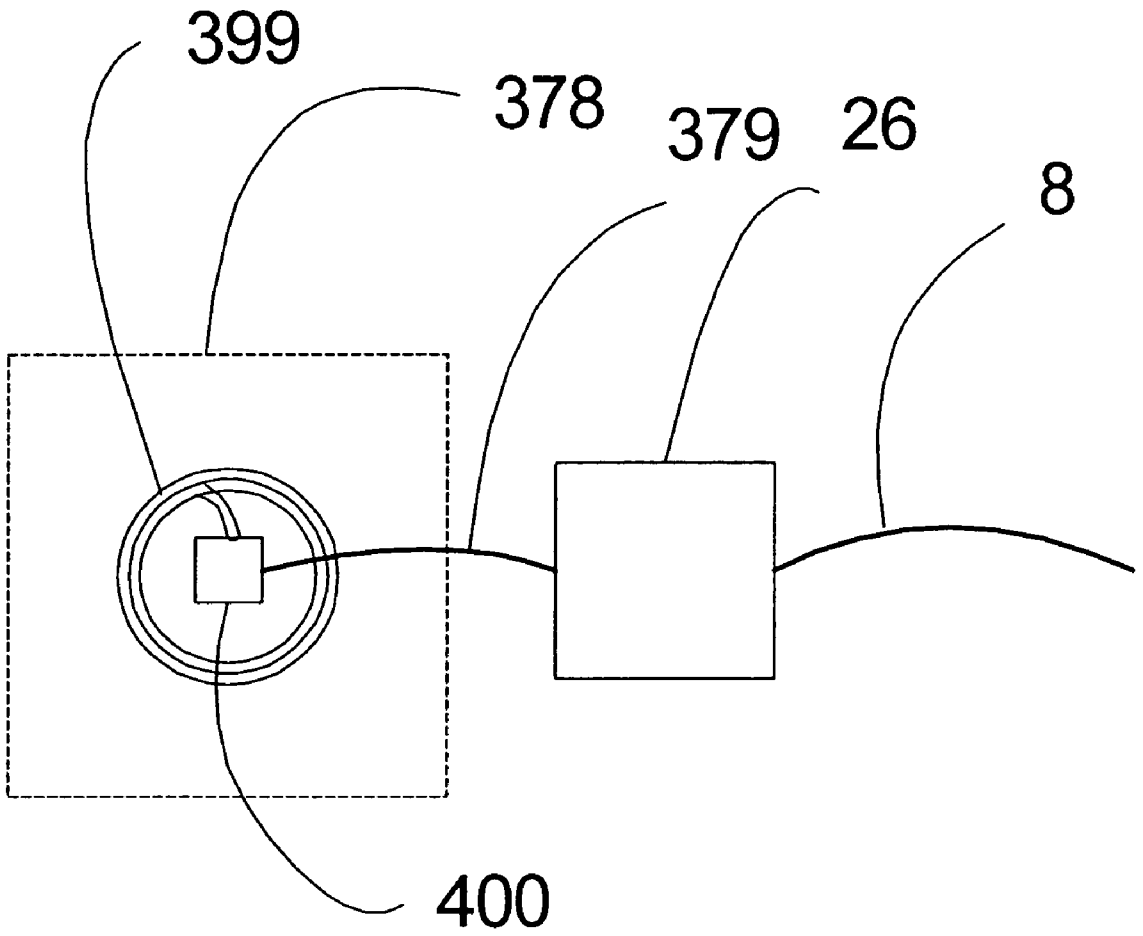

Figure 24

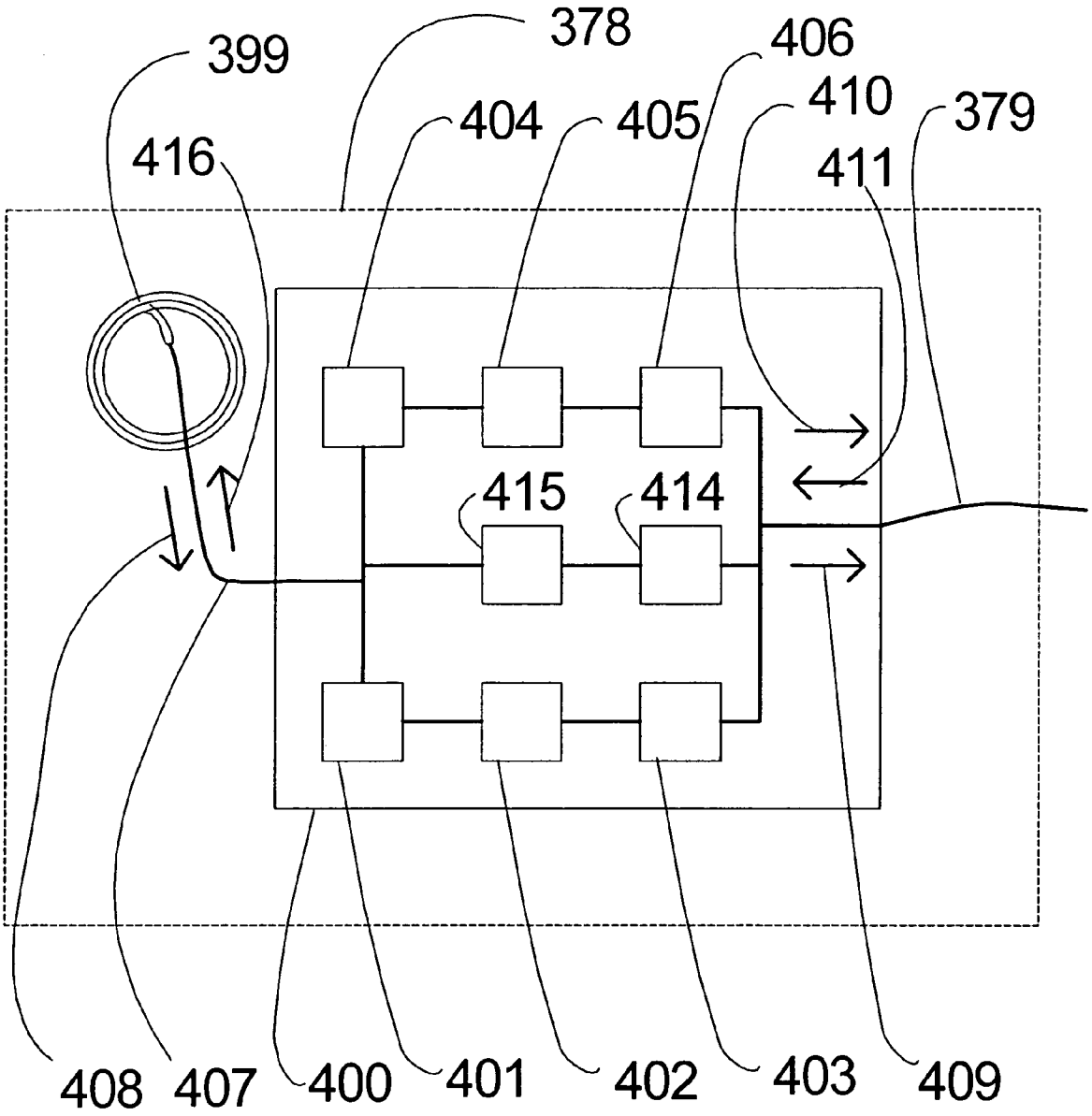
399
378
406
410
379
404
405
416
411
415
414
408
407
400
401
402
403
409

Figure 25

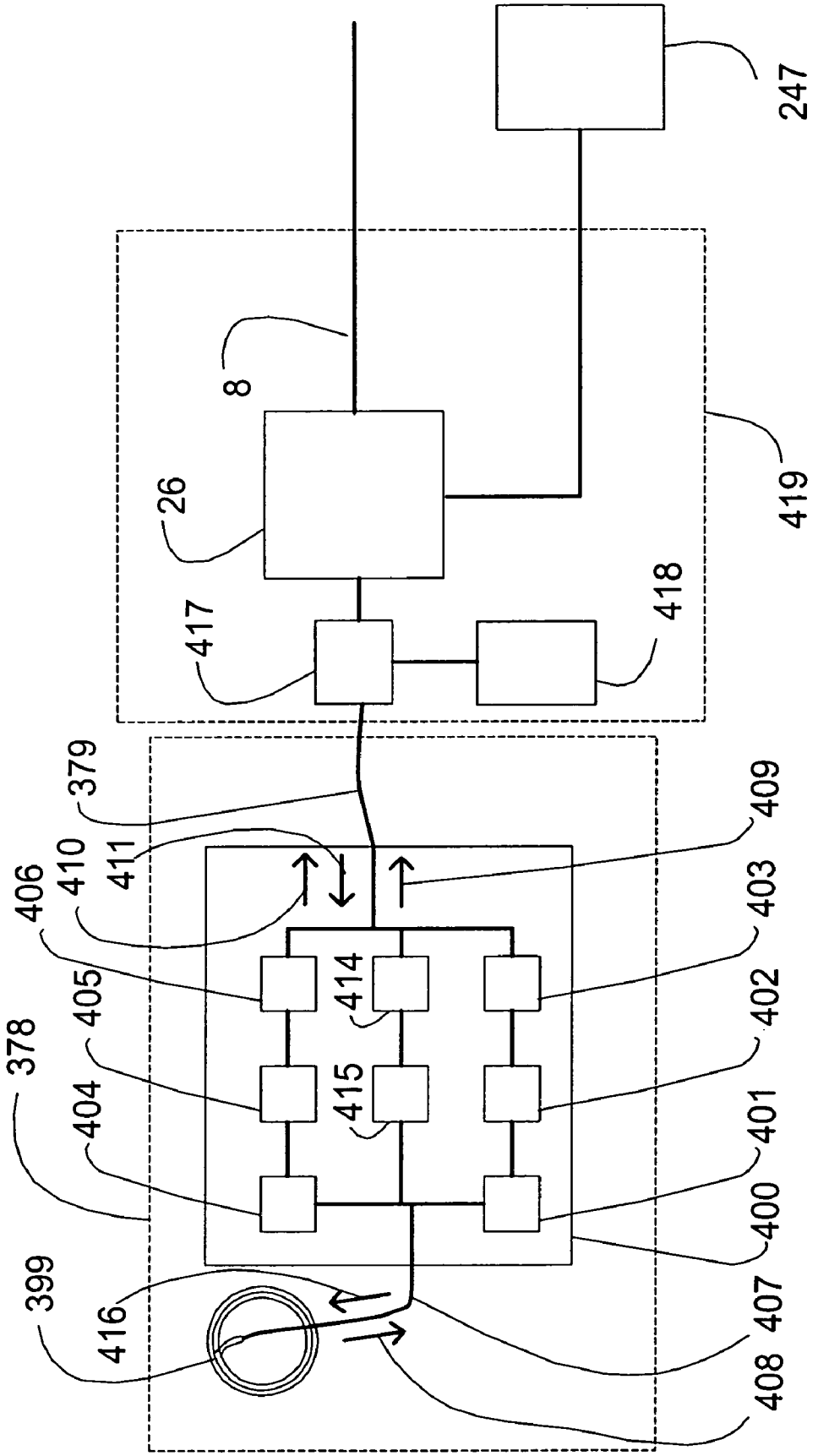
247
8
26
419
417
418
379
409
411
410
406
403
414
405
402
378
415
404
401
400
399
416
407
408

Figure 26

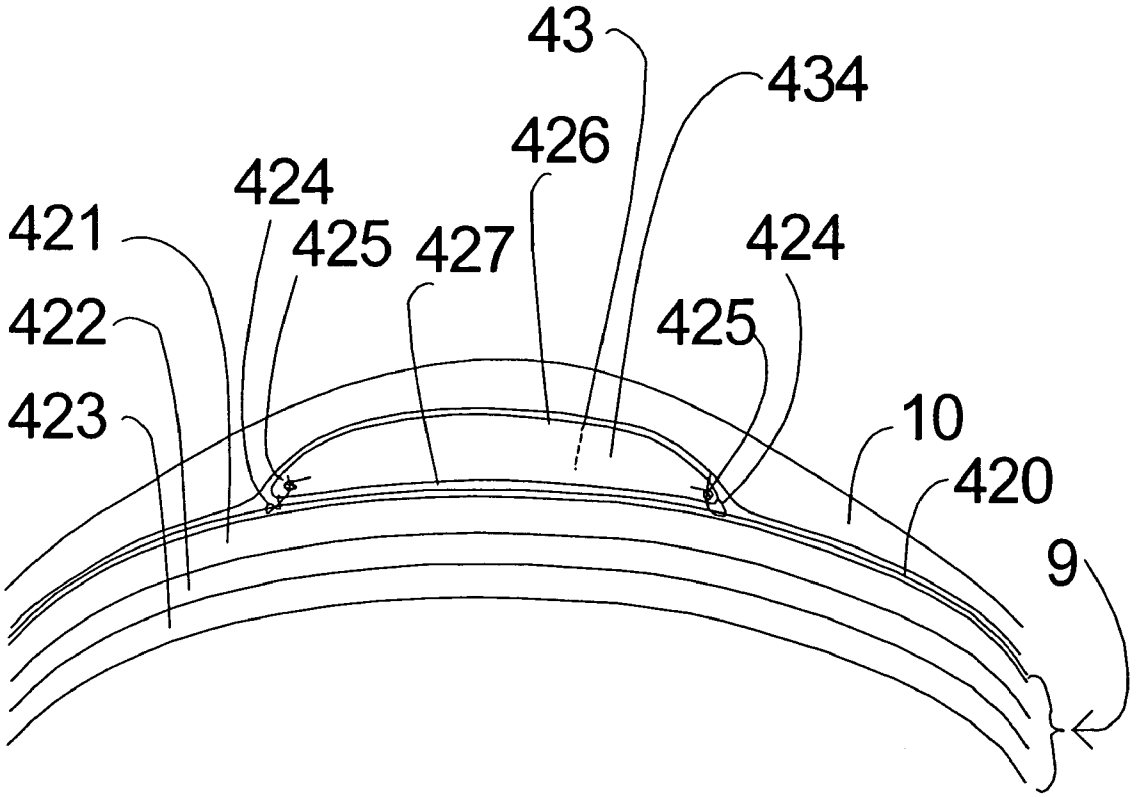

Figure 27

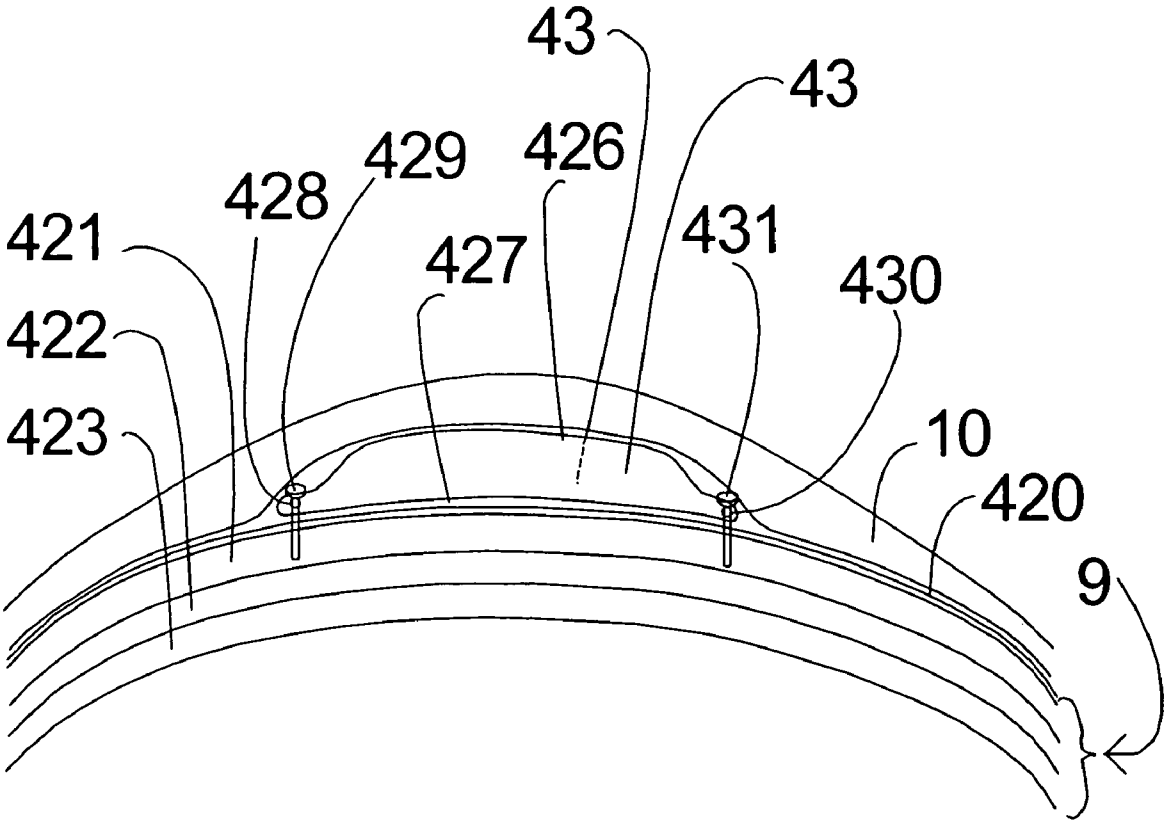

Figure 28

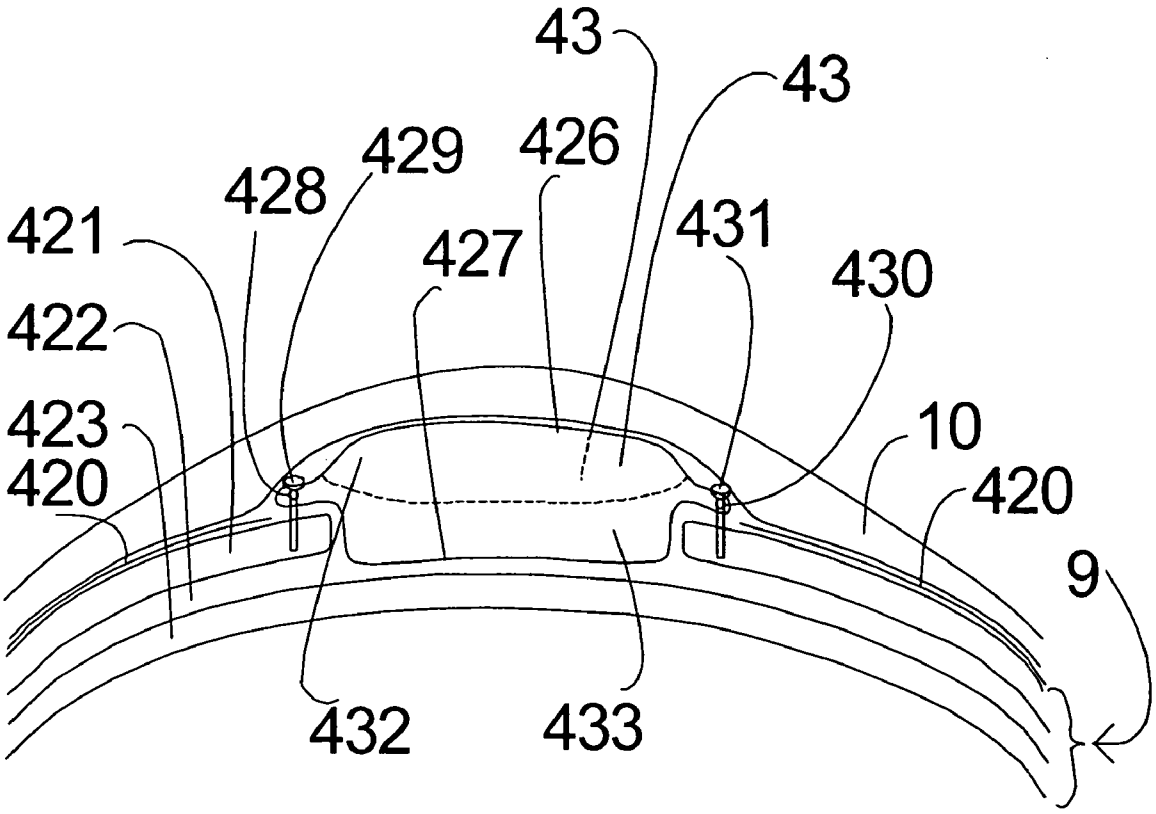

Figure 29

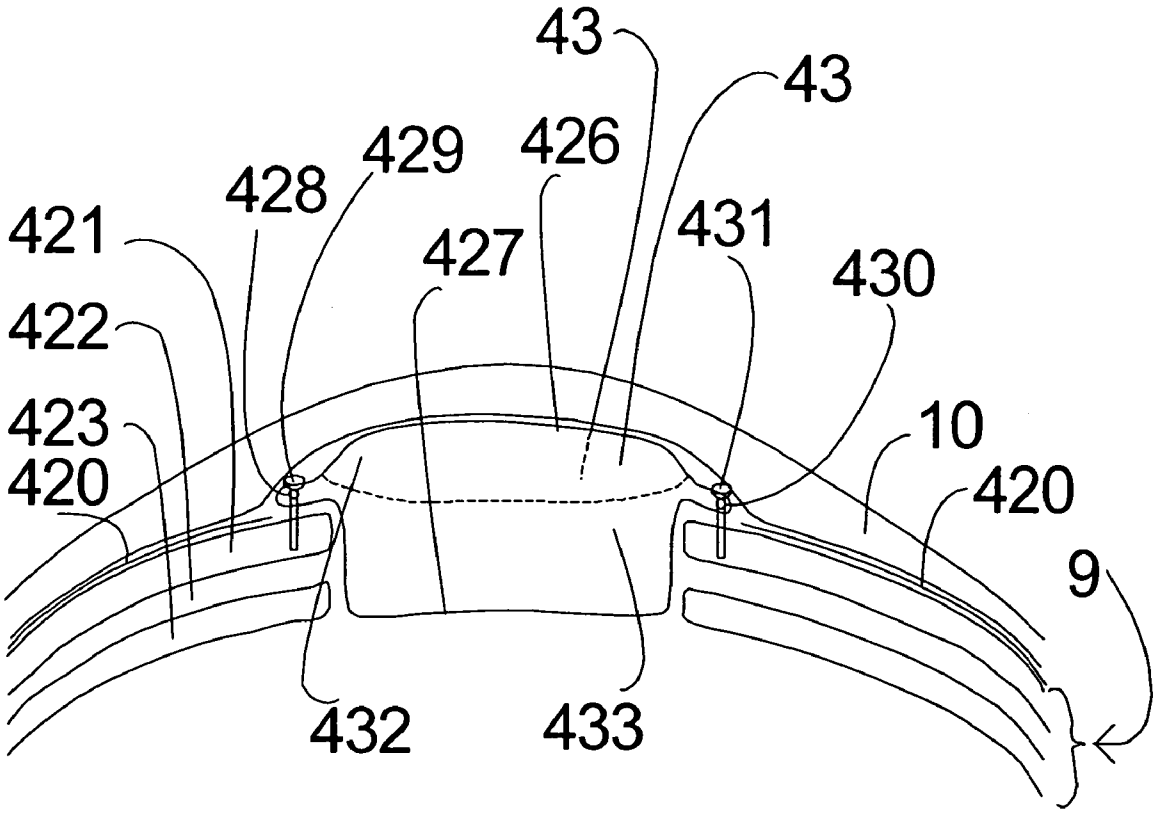

Figure 30

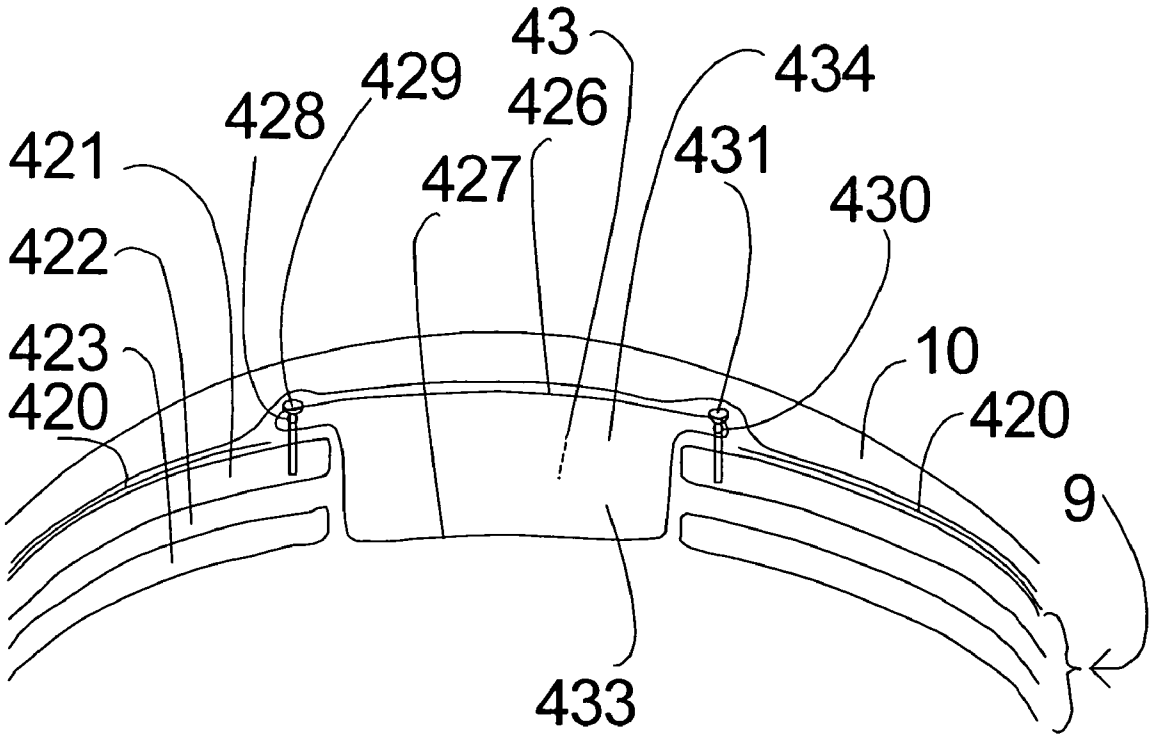

Figure 31

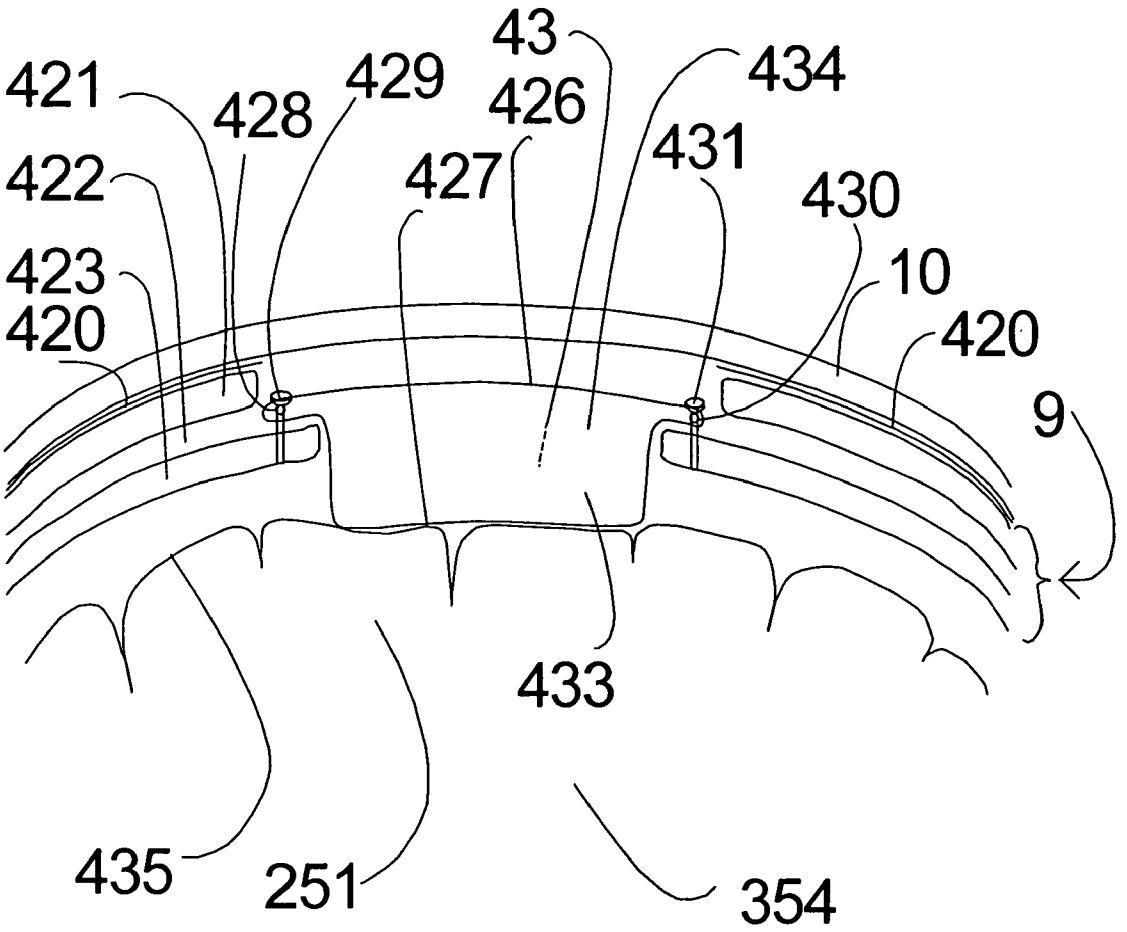
43
421
429
434
428
426
422
427
431
430
423
10
420
420
9
433
435
251
354

Figure 32

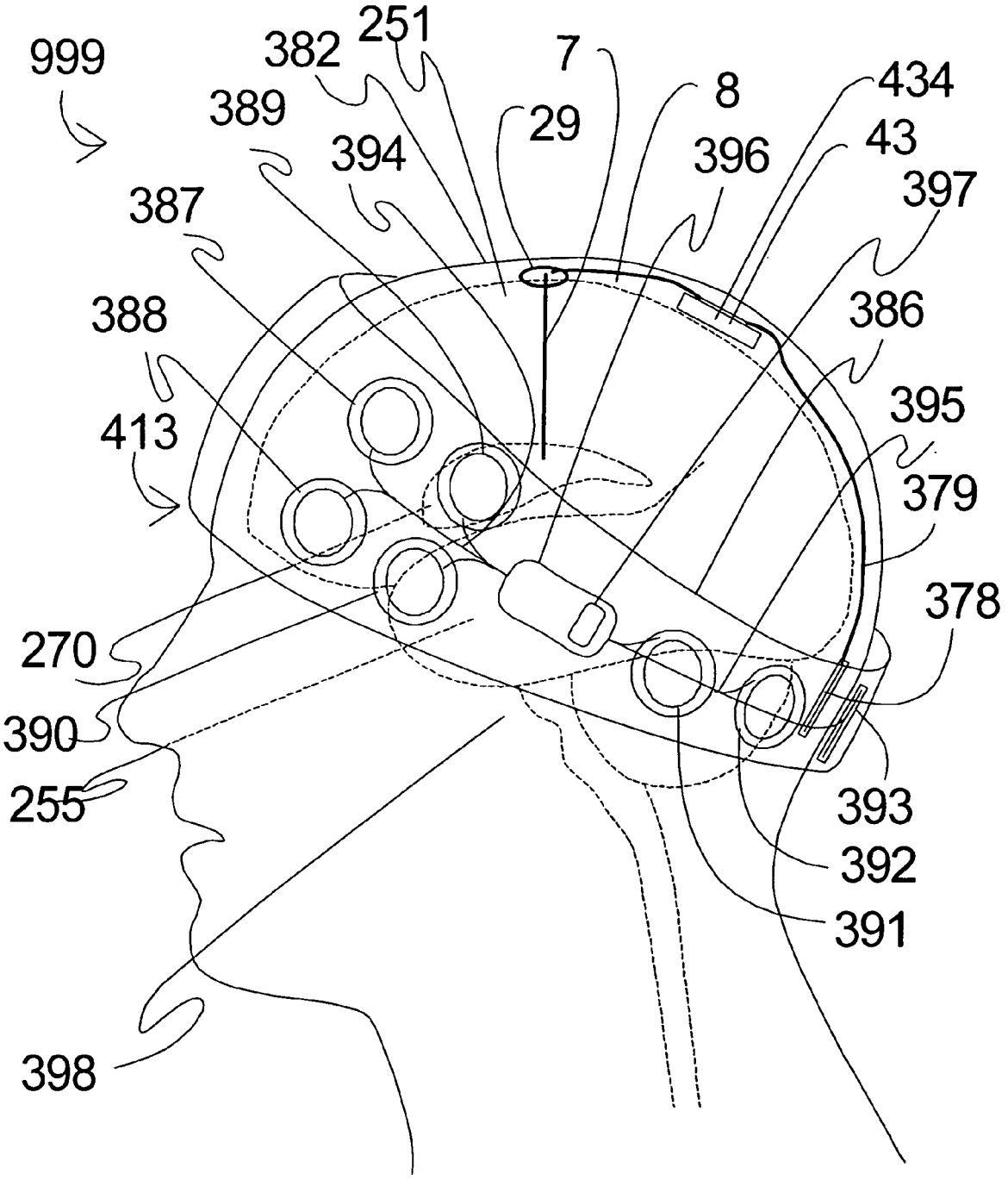
999
382
251
7
8
434
389
29
394
396
43
387
397
388
386
413
395
379
378
270
390
255
393
392
391
398

Figure 33

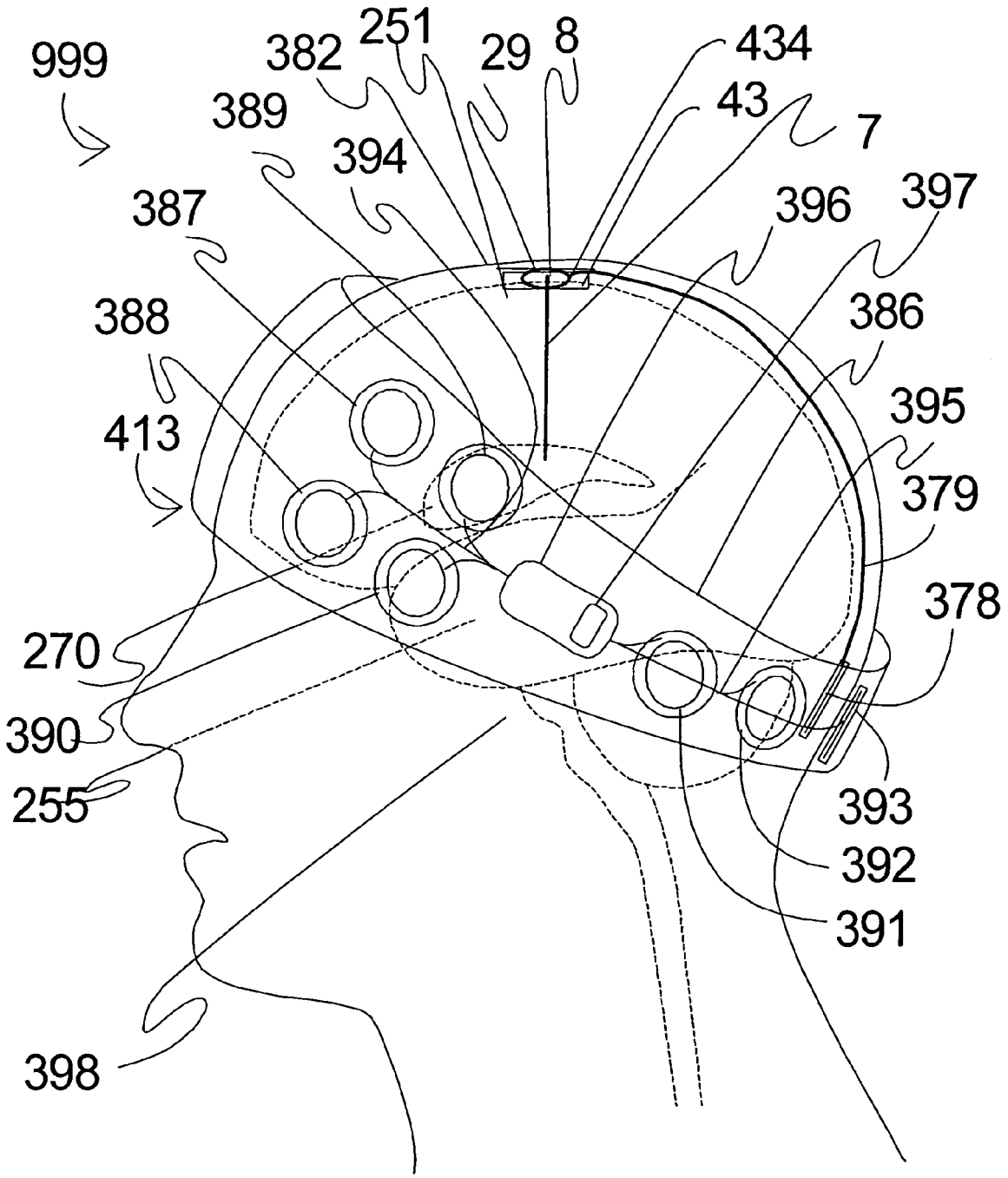
999
382
251
29
8
434
43
7
389
394
387
396
397
388
386
413
395
379
378
270
390
255
393
392
391
398

Figure 34

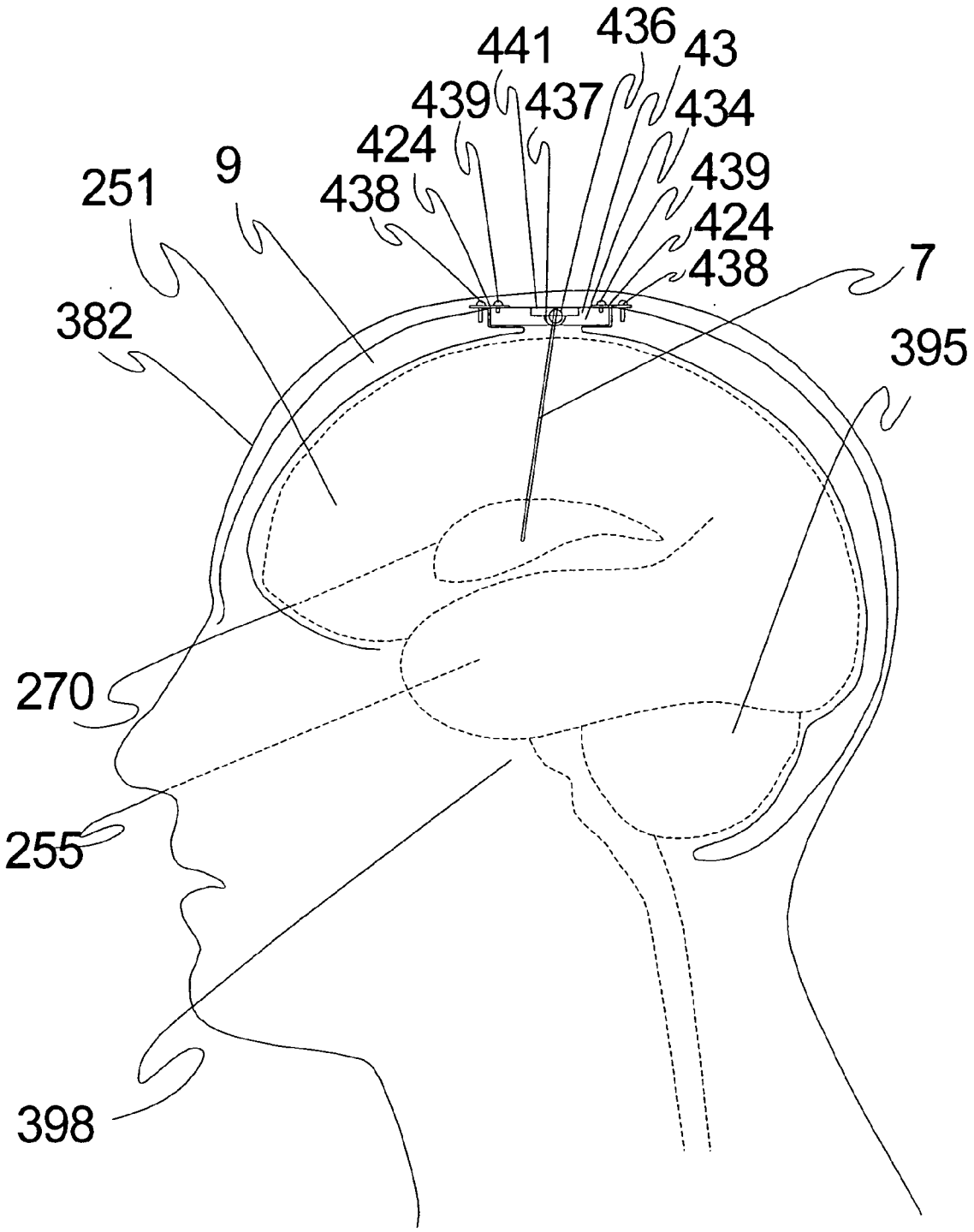
441
436
43
439
437
434
424
439
251
9
438
424
438
7
382
395
270
255
398

Figure 35

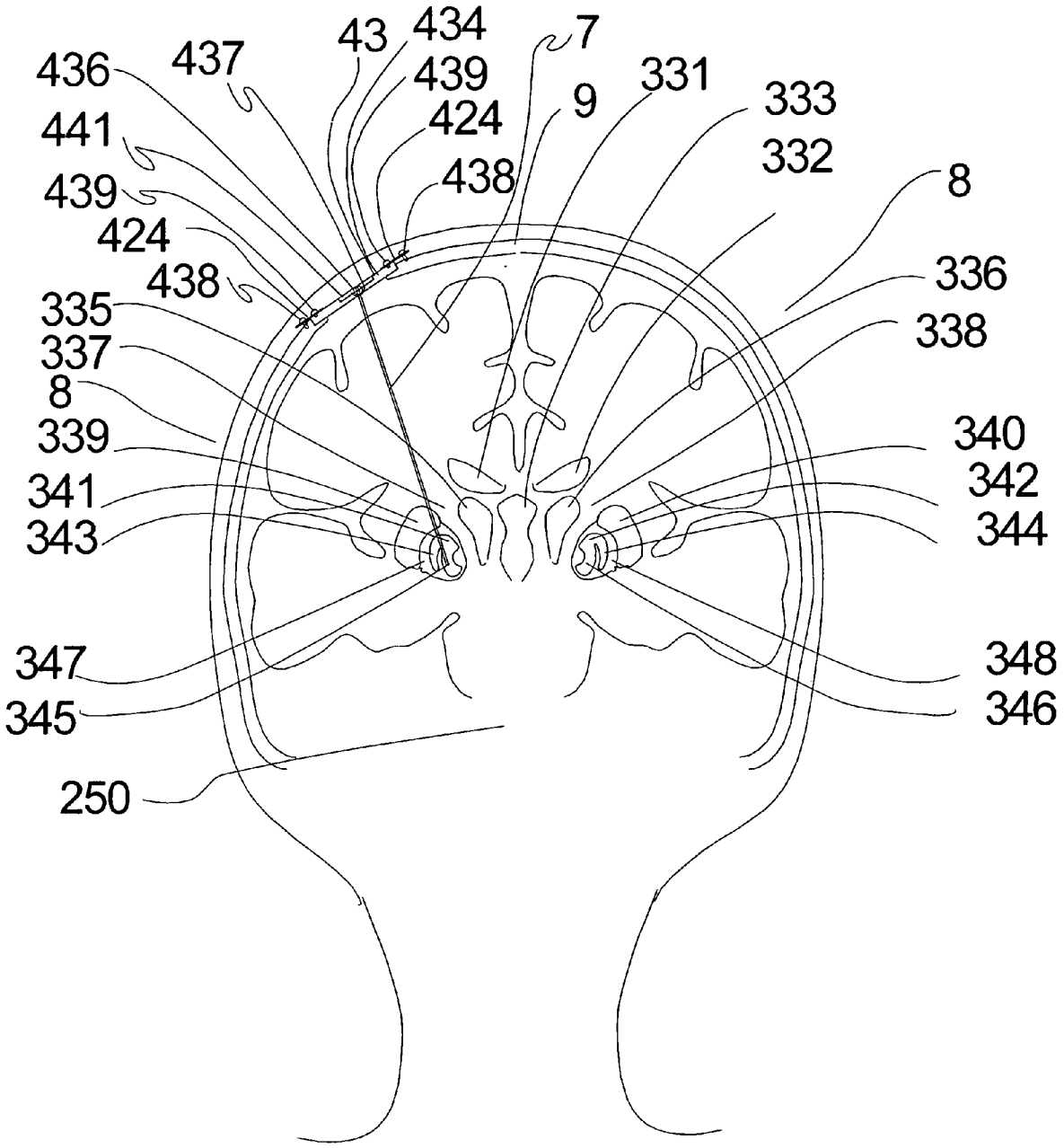
436
437
43
434
439
7
331
333
441
424
9
332
439
438
8
424
438
336
335
338
337
8
339
340
341
342
343
344
347
348
345
346
250

Figure 36

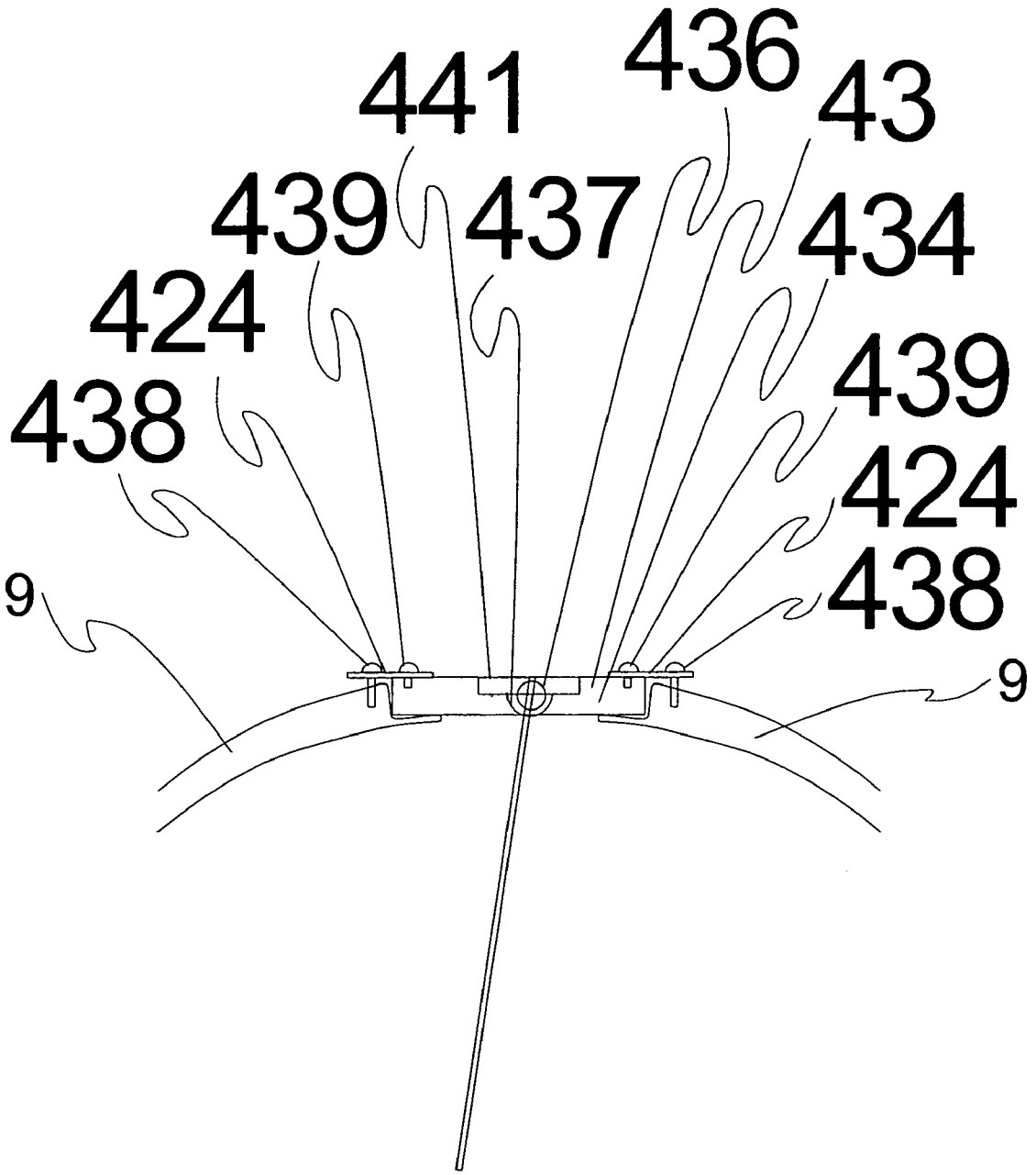

Figure 37

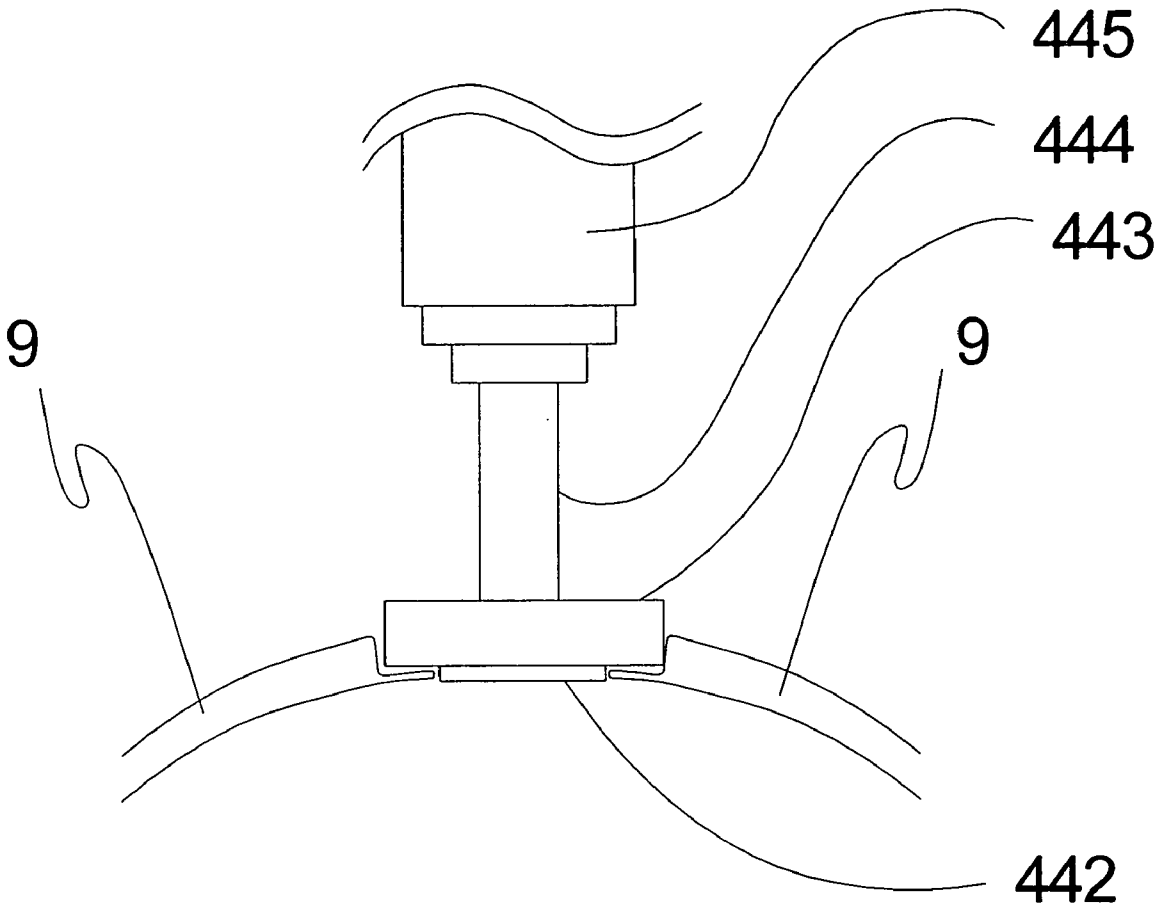

Figure 38

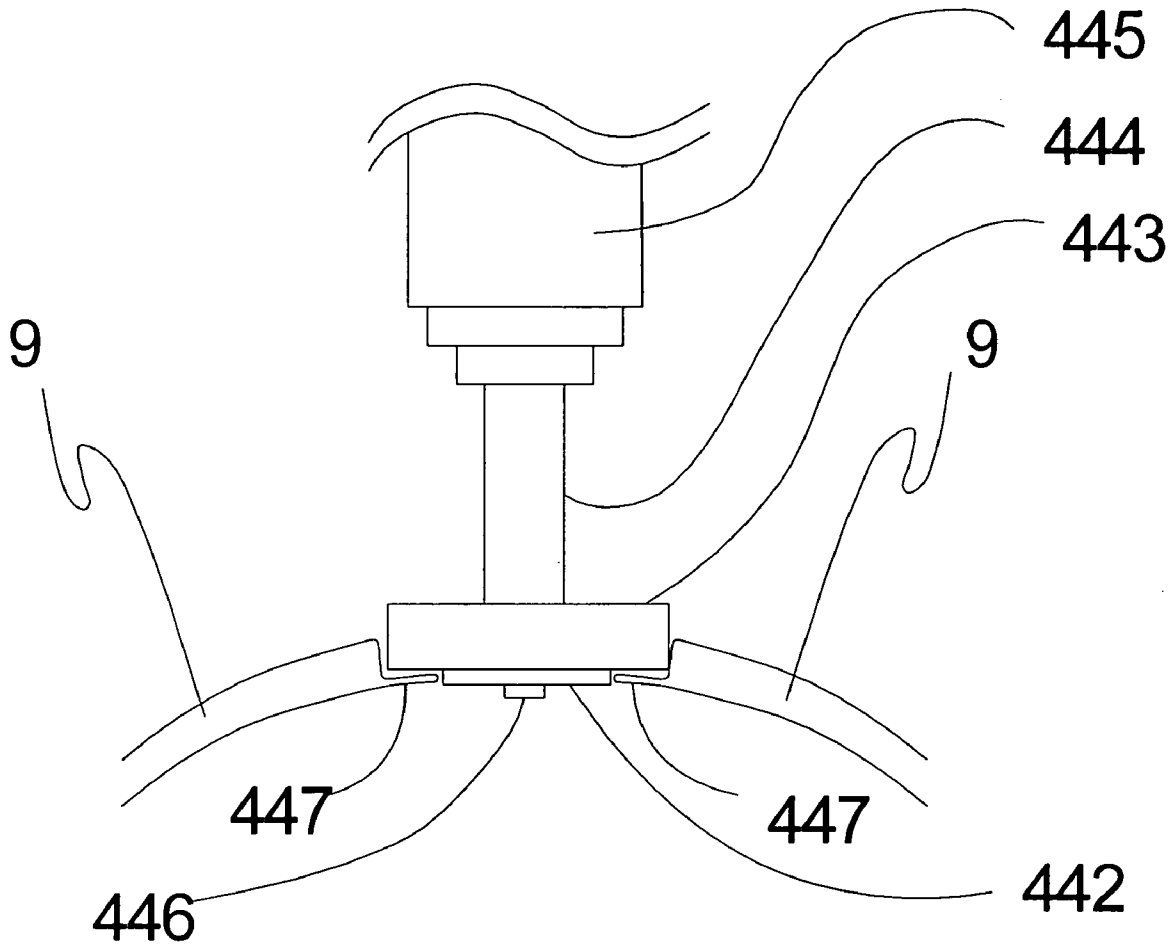

Figure 39

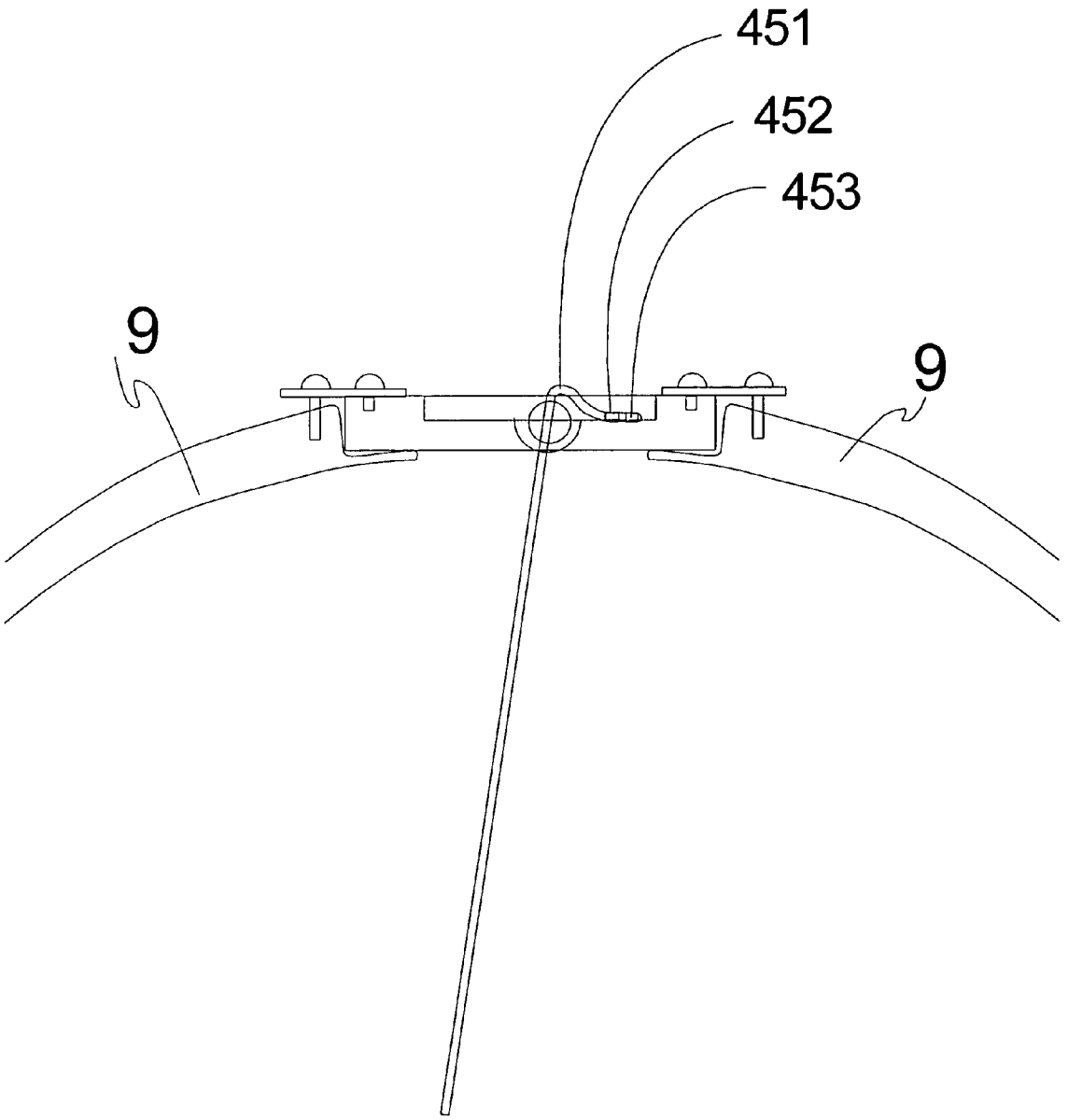

Figure 40

APPARATUS AND METHOD FOR CLOSED-LOOP INTRACRANIAL STIMULATION FOR OPTIMAL CONTROL OF NEUROLOGICAL DISEASE

CROSS REFERENCE TO RELATED APPLICATIONS

[0001] This application claims the benefit of prior, co-pending U.S. patent application Ser. No. 10/008,576, entitled OPTIMAL METHOD AND APPARATUS FOR NEURAL MODULATION FOR THE TREATMENT OF NEUROLOGICAL DISEASE, PARTICULARLY MOVEMENT DISORDERS, filed Nov. 11, 2001, and naming as inventor Daniel John DiLorenzo; and of U.S. patent application Ser. No. 09/340,326, entitled APPARATUS AND METHOD FOR CLOSED-LOOP INTRACRANIAL STIMULATION FOR OPTIMAL CONTROL OF NEUROLOGICAL DISEASE, filed Jun. 25, 1999, and naming as inventor Daniel John DiLorenzo; and of U.S. Provisional Patent Application Ser. No. 60/095,413 entitled OPTIMAL METHOD AND APPARATUS FOR NEURAL MODULATION FOR THE TREATMENT OF NEUROLOGICAL DISEASE, PARTICULARLY MOVEMENT DISORDERS, filed Aug. 5, 1998 and naming as inventor Daniel John DiLorenzo.

[0002] This application also claims the benefit of prior, co-pending U.S. patent application Ser. No. 10/198,871, entitled METHOD AND APPARATUS FOR NEUROMODULATION AND PHSYIOLOGIC MODULATION FOR THE TREATMENT OF METABOLIC AND NEUROPSYCHIATRIC DISEASE, filed Jul. 19, 2002, and naming as inventor Daniel John DiLorenzo, and of U.S. Provisional Patent Application Ser. No. 60/307,124, entitled PHYSIOLOGIC MODULATION FOR THE CONTROL OF OBESITY, DEPRESSION, EPILEPSY, AND DIABETES, filed Jul. 19, 2001, and naming as inventor Daniel John DiLorenzo.

[0003] This application also claims the benefit of prior, co-pending U.S. Provisional Application Ser. No. 60/427,699, entitled APPARATUS AND METHOD FOR CLOSED-LOOP INTRACRANIAL SIMULATION FOR OPTIMAL CONTROL OF NEUROLOGICAL DISEASE, filed Nov. 20, 2002, and naming as inventor Daniel John DiLorenzo.

[0004] This application also claims the benefit of prior, co-pending U.S. Provisional Application Ser. No. 60/436,792, entitled APPARATUS AND METHOD FOR CLOSED-LOOP INTRACRANIAL STIMULATION FOR OPTIMAL CONTROL OF NEUROLOGICAL DISEASE, filed Dec. 27, 2002, and naming as inventor Daniel John DiLorenzo.

BACKGROUND OF THE INVENTION

[0005] 1. Field of the Invention

[0006] The present invention relates generally to neurological disease and, more particularly, to intracranial stimulation for optimal control of movement disorders and other neurological disease.

[0007] 2. Related Art

[0008] There are a wide variety of treatment modalities for neurological disease including movement disorders such as Parkinson's disease, Huntington's disease, and Restless Leg Syndrome, as well as psychiatric disease including depression, bipolar disorder and borderline personality disorders. These treatment modalities are moderately efficacious; however, they suffer from several severe drawbacks. Each of these traditional treatment modalities and their associated limitations are described below.

[0009] One common conventional technique for controlling neurological disease includes the use of dopaminergic agonists or anticholinergic agents. Medical management using these techniques requires considerable iteration in dosing adjustments before an "optimal" balance between efficacy and side effect minimization is achieved. Variation, including both circadian and postprandial variations, causes wide fluctuation in symptomatology. This commonly results in alternation between "on" and "off" periods during which the patient possesses and loses motor functionality, respectively.

[0010] Another traditional approach for controlling movement disorders is tissue ablation. Tissue ablation is most commonly accomplished through stereotactic neurosurgical procedures, including pallidotomy, thalamotomy, subthalamotomy, and other lesioning procedures. These procedures have been found to be moderately efficacious. However, in addition to posing risks that are inherent to neurosurgical operations, these procedures suffer from a number of fundamental limitations. One such limitation is that tissue removal or destruction is irreversible. As a result, excessive or inadvertent removal of tissue cannot be remedied.

[0011] Furthermore, undesirable side effects, including compromise of vision and motor or sensory functions, are likely to be permanent conditions. In particular, bilateral interventions place the patient at considerable risk for developing permanent neurologic side effects, including incontinence, aphasia, and grave psychic disorders. An additional drawback to this approach is that the "magnitude" of treatment is constant. That is, it is not possible to vary treatment intensity over time, as may be required to match circadian, postprandial, and other fluctuations in symptomatology and consequent therapeutic needs. Thus, decrease in treatment "magnitude" is not possible while an increase in treatment "magnitude" necessitates reoperation. Some adjustment is possible through augmentation with pharmacologic treatment; however, these additional treatments are subject to the above-noted limitations related to drug therapy.

[0012] Another traditional approach for controlling movement disorders and other neurological disease includes tissue transplantation, typically from animal or human mesencephalic cells. Although tissue transplantation in humans has been performed for many years, it remains experimental and is limited by ethical concerns when performed using a human source. Furthermore, graft survival, as well as subsequent functional connection with intracranial nuclei, are problematic. The yield, or percentage of surviving cells, is relatively small and is not always predictable, posing difficulties with respect to the control of treatment "magnitude."

[0013] Another traditional approach for controlling neurological disease is the continuous electrical stimulation of a predetermined neurological region. Chronic high frequency intracranial electrical stimulation is typically used to inhibit cellular activity in an attempt to functionally replicate the effect of tissue ablation, such as pallidotomy and thala-

motomy. Acute electrical stimulation and electrical recording and impedance measuring of neural tissue have been used for several decades in the identification of brain structures for both research purposes as well as for target localization during neurosurgical operations for a variety of neurological diseases. During intraoperative electrical stimulation, reduction in tremor has been achieved using frequencies typically on the order of 75 to 330 Hz. Based on these findings, chronically implanted constant-amplitude electrical stimulators have been implanted in such sites as the thalamus, subthalamic nucleus and globus pallidus.

[0014] Chronic constant-amplitude stimulation has been shown to be moderately efficacious. However, it has also been found to be limited by the lack of responsiveness to change in patient system symptomatology and neuromotor function. Following implantation, a protracted phase of parameter adjustment, typically lasting several weeks to months, is endured by the patient while stimulation parameters are interactively adjusted during a series of patient appointments. Once determined, an "acceptable" treatment magnitude is maintained as a constant stimulation level. A drawback to this approach is that the system is not responsive to changes in patient need for treatment. Stimulation is typically augmented with pharmacological treatment to accommodate such changes, causing fluctuation of the net magnitude of treatment with the plasma levels of the pharmacologic agent.

[0015] As noted, while the above and other convention treatment modalities offer some benefit to patients with movement disorders, their efficacy is limited. For the above-noted reasons, with such treatment modalities it is difficult and often impossible to arrive at an optimal treatment "magnitude," that is, an optimal dose or intensity of treatment. Furthermore, patients are subjected to periods of overtreatment and undertreatment due to variations in disease state. Such disease state variations include, for example, circadian fluctuations, postprandial (after meal) and nutrition variations, transients accompanying variations in plasma concentrations of pharmacological agents, chronic progression of disease, and others.

[0016] Moreover, a particularly significant drawback to the above and other traditional treatment modalities is that they suffer from inconsistencies in treatment magnitude. For example, with respect to drug therapy, a decrease in responsiveness to pharmacologic agents eventually progresses to eventually preclude effective pharmacologic treatment. With respect to tissue ablation, progression of disease often necessitates reoperation to extend pallidotomy and thalamotomy lesion dimensions. Regarding tissue transplantation, imbalances between cell transplant formation rates and cell death rates cause unanticipated fluctuations in treatment magnitude. For continuous electrical stimulation, changes in electrode position, electrode impedance, as well as patient responsiveness to stimulation and augmentative pharmacologic agents, cause a change in response to a constant magnitude of therapy.

[0017] Currently, magnets commonly serve as input devices used by patients with implantable stimulators, including deep brain stimulators, pacemakers, and spinal cord stimulators. Current systems require the patient to manually turn the system off at night time to conserve battery power and use such magnets to maintain system power. This presents considerable difficulty to many patients whose tremor significantly impairs arm function, as they are unable to hold a magnet in a stable manner over the implanted electronics module. Consequently, many patients are unable to turn their stimulators on in the morning without assistance.

[0018] What is needed, therefore, is an apparatus and method for treatment of patients with neurological disease in general and movement disorders in particular that is capable of determining and providing an optimal dose or intensity of treatment. Furthermore, the apparatus and method should be responsive to unpredictable changes in symptomatology and minimize alternations between states of overtreatment and undertreatment. The system should also be capable of anticipating future changes in symptomatology and neuromotor functionality, and being responsive to such changes when they occur.

SUMMARY OF THE INVENTION

[0019] The present invention is a neurological control system for modulating activity of any component or structure comprising the entirety or portion of the nervous system, or any structure interfaced thereto, generally referred to herein as a "nervous system component." The neurological control system generates neural modulation signals delivered to a nervous system component through one or more intracranial (IC) stimulating electrodes in accordance with treatment parameters. Such treatment parameters may be derived from a neural response to previously delivered neural modulation signals sensed by one or more sensors, each configured to sense a particular characteristic indicative of a neurological or psychiatric condition. Neural modulation signals include any control signal that enhances or inhibits cell activity. Significantly the neurological control system considers neural response, in the form of the sensory feedback, as an indication of neurological disease state and/or responsiveness to therapy, in the determination of treatment parameters.

[0020] In one aspect of the invention, a neural modulation system for use in treating disease which provides stimulus intensity that may be varied is disclosed. The stimulation may be at least one of activating, inhibitory, and a combination of activating and inhibitory and the disease is at least one of neurologic and psychiatric. For example, the neurologic disease may include Parkinson's disease, Huntington's disease, Parkinsonism, rigidity, hemiballism, choreoathetosis, dystonia, akinesia, bradykinesia, hyperkinesia, other movement disorder, epilepsy, or the seizure disorder. The psychiatric disease may include, for example, depression, bipolar disorder, other affective disorder, anxiety, phobia, schizophrenia, multiple personality disorder. The psychiatric disorder may also include substance abuse, attention deficit hyperactivity disorder, impaired control of aggression, or impaired control of sexual behavior.

[0021] In another aspect of the invention, a neurological control system is disclosed. The neurological control system modulates the activity of at least one nervous system component, and includes at least one intracranial stimulating electrode, each constructed and arranged to deliver a neural modulation signal to at least one nervous system component; at least one sensor, each constructed and arranged to sense at least one parameter, including but not limited to physi-

ologic values and neural signals, which is indicative of at least one of disease state, magnitude of symptoms, and response to therapy; and a stimulating and recording unit constructed and arranged to generate said neural modulation signal based upon a neural response sensed by said at least one sensor in response to a previously delivered neural modulation signal.

[0022] In another aspect of the invention, an apparatus for modulating the activity of at least one nervous system component is disclosed. The apparatus includes means for delivering neural modulation signal to said nervous system component; and means for sensing neural response to said neural modulation signal. In one embodiment, the delivery means comprises means for generating said neural modulation signal, said generating means includes signal conditioning means for conditioning sensed neural response signals, said conditioning including but not limited to at least one of amplification, lowpass filtering, highpass filtering, bandpass filtering, notch filtering, root-mean square calculation, envelope determination, and rectification; signal processing means for processing said conditioned sensed neural response signals to determine neural system states, including but not limited to a single or plurality of physiologic states and a single or plurality of disease states; and controller means for adjusting neural modulation signal in response to sensed neural response to signal.

[0023] Advantageously, aspects of the neurological control system are capable of incorporating quantitative and qualitative measures of patient symptomatology and neuromotor circuitry function in the regulation of treatment magnitude.

[0024] Another advantage of certain aspects of the present invention is that it performs automated determination of the optimum magnitude of treatment. By sensing and quantifying the magnitude and frequency of tremor activity in the patient, a quantitative representation of the level or "state" of the disease is determined. The disease state is monitored as treatment parameters are automatically varied, and the local or absolute minimum in disease state is achieved as the optimal set of stimulation parameters is converged upon. The disease state may be represented as a single value or a vector or matrix of values; in the latter two cases, a multi variable optimization algorithm is employed with appropriate weighting factors. Automated optimization of treatment parameters expedites achievement of satisfactory treatment of the patient, reducing the time and number of interactions, typically in physician visits, endured by the patient. This optimization includes selection of electrode polarities, electrode configurations stimulating parameter waveforms, temporal profile of stimulation magnitude, stimulation duty cycles, baseline stimulation magnitude, intermittent stimulation magnitude and timing, and other stimulation parameters.

[0025] Another advantage of certain aspects of the present invention is its provision of signal processed sensory feedback signals to clinicians to augment their manual selection of optimum treatment magnitude and pattern. Sensory feedback signals provided to the clinician via a clinician-patient interface include but are not limited to tremor estimates, electromyography (EMC) signals, EEC signals, accelerometer signals, acoustic signals, peripheral nerve signals, cranial nerve signals, cerebral or cerebellar cortical signals, signals from basal ganglia, signals from other brain or spinal cord structures, and other signals.

[0026] A further advantage of certain aspects of the present invention is that it provides modulation of treatment magnitude to compensate for predictable fluctuations in symptomatology and cognitive and neuromotor functionality. Such fluctuations include those due to, for example, the circadian cycle, postprandial and nutritional changes in symptomatology, and variations in plasma levels of pharmacologic agents.

[0027] A further advantage of certain aspects of the present invention is that it is responsive to patient symptomatology, as tremor typically abates during sleep. This overcomes the above-noted problems of patient inability to hold a magnet in a stable manner over the implanted electronics module and the resulting problem of not being able to turn their stimulators on in the morning without assistance.

[0028] A still further advantage of certain aspects of the present invention is that it provides prediction of future symptomatology, cognitive and neuromotor functionality, and treatment magnitude requirements. Such predictions may be based on preset, learned and real-time sensed parameters as well as input from the patient, physician or other person or system.

[0029] A still further advantage of certain aspects of the present invention is that it optimizes the efficiency of energy used in the treatment given to the patient. Stimulation intensity may be minimized to provide the level of treatment magnitude necessary to control disease symptoms to a satisfactory level without extending additional energy delivering unnecessary overtreatment.

[0030] Further features and advantages of the present invention, as well as the structure and operation of various embodiments of the present invention, are described in detail below with reference to the accompanying drawings.

BRIEF DESCRIPTION OF THE DRAWINGS

[0031] The present invention is described with reference to the accompanying drawings. In the drawings, like reference numerals indicate identical or functionally similar elements.

[0032] **FIG. 1** is a schematic diagram of one embodiment of the present invention implanted bilaterally in a human patient.

[0033] **FIG. 2** is an architectural block diagram of one embodiment of the neurological control system of the present invention.

[0034] **FIG. 3** is a block diagram of one embodiment of an intracranial recording electrode (ICRE) signal processor and an intracranial stimulating electrode (ICSE) signal processor each of which are included within the signal processor illustrated in **FIG. 2**.

[0035] **FIG. 4** is a schematic diagram of a globus pallidus implanted with stimulating and recording electrodes in accordance with one embodiment of the present invention.

[0036] **FIG. 5** is a block diagram of one embodiment of an EMG signal processor that is included in one embodiment of the signal processor illustrated in **FIG. 2**.

[0037] **FIG. 6** is a block diagram of one embodiment of an EEG signal processor module that is included in one embodiment of the signal processor illustrated in **FIG. 2**.

[0038] **FIG. 7** is a block diagram of one embodiment of an accelerometer signal processor that is incorporated into certain embodiments of the signal processor illustrated in **FIG. 2**.

[0039] **FIG. 8** is a block diagram of one embodiment of an acoustic signal processor that is included in certain embodiments of the signal processor illustrated in **FIG. 2**.

[0040] **FIG. 9** is block diagram of one embodiment of a peripheral nerve electrode (PNE) signal processor **237** that is implemented in certain embodiments of signal processor **71**. PNE signal

[0041] **FIG. 10** is a schematic diagram of one embodiment of the signal processor illustrated in **FIG. 2**.

[0042] **FIG. 11** is a schematic diagram of the patient-neural modulator system illustrated in **FIG. 2** illustrated to show its controller and observer components.

[0043] **FIG. 12** is a schematic diagram of one embodiment of the control circuit illustrated in **FIG. 2**.

[0044] **FIG. 13** is a schematic diagram of electrical stimulation waveforms for neural modulation.

[0045] **FIG. 14** is a schematic diagram of one example of the recorded waveforms.

[0046] **FIG. 15** is a schematic block diagram of an analog switch used to connect one or an opposing polarity pair of Zener diodes across the noninverting and inverting inputs of an intracranial recording electrode amplifier.

[0047] **FIG. 16** is a diagram of a two coil embodiment of the power delivery unit.

[0048] **FIG. 17** is a magnification of the configurations of **FIGS. 16 and 18** showing the magnetic flux penetrating the skin.

[0049] **FIG. 18** is a diagram of a three coil embodiment of the power delivery unit.

[0050] **FIG. 19** is a diagram of the power delivery unit with coil holder.

[0051] **FIG. 20** is a diagram of the coil holder.

[0052] **FIG. 21** is a diagram of the electromagnetic copies in proximity to the head of a patient.

[0053] **FIG. 22** is a diagram of multiple coil embodiments.

[0054] **FIG. 23** is a diagram of the paracranial design, with implanted components in close proximity to the patient's head.

[0055] **FIG. 24** is a diagram of the power conversion unit that includes the electromagnetic coupling element.

[0056] **FIG. 25** is a diagram of the power conversion circuit.

[0057] **FIG. 26** is a diagram of the overall system.

[0058] **FIG. 27** is a diagram of the stimulating and recording unit.

[0059] **FIG. 28** is a diagram of the system enclosure secured to the calvarium.

[0060] **FIG. 29** is a diagram of a lower profile design.

[0061] **FIG. 30** is a diagram of a lower profile design with the system enclosure partially recessed into the calvarium.

[0062] **FIG. 31** is a diagram of a lower profile design with the system enclosure fully recessed into the calvarium.

[0063] **FIG. 32** is a diagram of a second lower profile design with the system enclosure fully recessed into the calvaium.

[0064] **FIG. 33** is a diagram of a neurological control system.

[0065] **FIG. 34** is a diagram of a second neurological control system.

[0066] **FIG. 35** is a schematic diagram of one embodiment of the present invention implanted unilaterally in a human patient, with the system enclosure recessed in the calvarium, shown as a lateral view.

[0067] **FIG. 36** is a schematic diagram of one embodiment of the present invention implanted unilaterally in a human patient, with the system enclosure recessed in the calvarium, shown as a anteroposterior view.

[0068] **FIG. 37** is a schematic diagram of a cross section of calvarium with system enclosure shown implanted recessed within the calvarium.

[0069] **FIG. 38** is a schematic diagram of a cross section of calvarium with drill bit shown in place after completion of process of drilling hole in calvarium.

[0070] **FIG. 39** is a schematic diagram of a cross section of calvarium with drill bit, with a penetration detection release mechanism, shown in place after completion of process of drilling hole in calvarium.

[0071] **FIG. 40** is a diagram depicting the path of the intracranial catheter and its connection to the electrical elements.

DETAILED DESCRIPTION

[0072] **FIG. 1** is a schematic diagram of one embodiment of the intracranial stimulator of the present invention implanted bilaterally in a human patient. In the embodiment illustrated in **FIG. 1**, two neurological control systems **999** are shown implanted bilaterally. Each system **999** includes a stimulating and recording unit **26** and one or more intracranial components described below. As described in this illustrative embodiment, the intracranial components preferably include a stimulating electrode array **37**. However, it should become apparent to those of ordinary skill in the relevant art after reading the present disclosure that the stimulating electrodes may also be extracranial; that is, attached to a peripheral nerve in addition to or in place of being located within the cranium. As shown in **FIG. 1**, stimulating and recording unit **26** of each neurological control system **999** is preferably implanted contralateral to the intracranial components of the device.

[0073] As one skilled in the relevant art would find apparent from the following description, the configuration illustrated in **FIG. 1** is just one example of the present

invention. Many other configurations are contemplated. For example, in alternative embodiments of the present invention, the stimulating and recording unit **26** is implanted ipsilateral or bilateral to the intracranial components. It should also be understood that the stimulating and recording unit **26** can receive ipsilateral, contralateral or bilateral inputs from sensors and deliver ipsilateral, contralateral, or bilateral outputs to a single or a plurality of intracranial stimulating electrode arrays **37**. Preferably, these inputs are direct or preamplified signals from at least one of EMG electrode array **50**, EEG electrode array **51**, Accelerometer Array **52**, Acoustic Transducer Array **53**, Peripheral Nerve Electrode Array **54**, and Intracranial Recording Electrode Array **38**. The signals input from these sensors will be referred to herein as "sensory input modalities"**247**. The outputs include but are not limited to one or more stimulating current signals or stimulating voltage signals to Intracranial Stimulating Electrode Array **37**.

[**0074**] In the embodiment illustrated in **FIG. 1**, the two unilateral systems **26** are shown to receive sensory inputs from the side contralateral as well as the intracranial stimulating electrode arrays **37**. In the illustrative embodiment, systems **26** also receive sensory inputs from intracranial recording electrode arrays **38**. As will become apparent from the following description, intracranial recording electrode arrays **38** may provide valuable feedback information.

[**0075**] It should be understood that this depiction is for simplicity only, and that any combination of ipsilateral, contralateral or bilateral combination of each of the multiple sensory input modalities and multiple stimulation output channels may be employed. In addition, stimulating and recording units **26** may be a single device, two communicating devices, or two independent devices. Accordingly, these and other configurations are considered to be within the scope of the present invention. It is anticipated that stimulating and recording units **26**, if implemented as distinct units, would likely be implanted in separate procedures (soon after clinical introduction) to minimize the likelihood of drastic neurological complications.

[**0076**] In the exemplary embodiment illustrated in **FIG. 1**, the intracranial stimulating electrode array **37** includes a plurality of intracranial stimulating electrodes **1**, **2**, **3** and **4**. Array **37** may, of course, have more or fewer electrodes than that depicted in **FIG. 1**. These intracranial stimulating electrodes **1-4** may be used to provide stimulation to a predetermined nervous system component. The electrical stimulation provided by the intracranial stimulating electrodes **1-4** may be excitatory or inhibitory, and this may vary in a manner which is preprogrammed, varied in real-time, computed in advance using a predictive algorithm, or determined using another technique now or latter developed.

[**0077**] The intracranial recording electrode arrays **38** includes intracranial recording electrodes **5** and **6**. In accordance with one embodiment of the present invention, the intracranial recording electrodes **5**, **6** are used to record cortical activity as a measure of response to treatment and as a predictor of impeding treatment magnitude requirements. In the illustrative embodiment, intracranial recording electrodes **5** and **6** are depicted in a location superficial to the intracranial stimulating electrodes **1-4**. However, this positioning may be reversed or the intracranial stimulating electrodes **1-4** and intracranial recording electrodes **5** and **6** may be interspersed in alternative embodiments. For example, these electrodes may be placed in at least one of motor cortex, premotor cortex, supplementary motor cortex, other motor cortical areas, somatosensory cortex, other sensory cortical areas, Wernicke's area, Broca's area, other cortical region, other intracranial region, and other extracranial region.

[**0078**] In the illustrative embodiment, an intracranial catheter **7** is provided to mechanically support and facilitate electrical connection between intracranial and extracranial structures. In this embodiment, intracranial catheter **7** contains one or more wires connecting extracranial stimulating and recording circuit **26** to the intracranial electrodes, including but not limited to, intracranial stimulating electrodes **1-4** and intracranial recording electrodes **5**, **6**. The wires contained within intracranial catheter **7** transmit stimulating electrode output signal (SEOS) to intracranial stimulating electrode array **37**. Such wires additionally transmit stimulating electrode input signal (SEIS) and recording electrode input signal (REIS), from intracranial stimulating electrode array **37** and intracranial recording electrode array **38** respectively, to stimulating and recording circuit **26**.

[**0079**] Stimulating and recording circuit **26** is protected within a circuit enclosure **44**. Circuit enclosure **44** and contained components, including stimulating and recording circuit **26** comprise stimulating and recording unit **43**. It should be understood that more or fewer of either type of electrode as well as additional electrode types and locations may be incorporated or substituted without departing from the spirit of the present invention. Furthermore, stimulating and recording circuit **26** can be placed extra cranially in a subclavian pocket as shown in **FIG. 1**, or it may be placed in other extracranial or intracranial locations.

[**0080**] Connecting cable **8** generally provides electrical connection between intracranial or intracranial locations. A set of electrical wires provides the means for communication between the intracranial and extracranial components; however, it should be understood that alternate systems and techniques such as radiofrequency links, optical (including infrared) links with transcranial optical windows, magnetic links, and electrical links using the body components as conductors, may be used without departing from the present invention. Specifically, in the illustrative embodiment, connecting cable **8** provides electrical connection between intracranial components **246** and stimulating and recording circuit **26**. In embodiments wherein stimulating and recording circuit **26** has an intracranial location, connecting cable **8** would likely be entirely intracranial. Alternatively, connecting in embodiments wherein stimulating and recording circuit **26** is implanted under scalp **10** or within or attached to calvarum **9**, connecting cable **8** may be confined entirely to subcutaneous region under the scalp **10**.

[**0081**] A catheter anchor **29** provides mechanical connection between intracranial catheter **7** and calvarum **9**. Catheter anchor **29** is preferably deep to the overlying scalp **10**. Such a subcutaneous connecting cable **8** provides electrical connection between intracranial electrodes **246** and stimulating and recording circuit **26**. Cable **8** may also connect any other sensors, including but not limited to any of sensory input modalities **247**, or other stimulating electrodes, medication dispensers, or actuators with stimulating and recording circuit **26**.

[0082] Sensory feedback is provided to recording and stimulating unit **26** from a multiplicity of sensors, collectively referred to as sensory input modalities **247**. Intracranial recording electrode array **38**, previously described, is intracranial in location. Additional sensors, most of which are located extracranially in the preferred embodiment, comprise the remainder of sensory input modalities **247**. Sensory input modalities **247** provide information to stimulating and recording unit **26**. As will be described in greater detail below, such information is processed by stimulating and recording unit **26** to deduce the disease state and progression and its response to therapy.

[0083] In one embodiment of the invention, a head-mounted acoustic sensor **11** is used to monitor any number of vibratory characteristics such as high frequency head vibration, muscle vibration, and/or speech production. Head-mounted acoustic sensor **11** is connected to stimulating and recording circuit **26** with an acoustic sensor connecting cable **30**.

[0084] A head-mounted accelerometer **12** is implemented in certain embodiments of the present invention to monitor head movement and position with respect to gravity. Head-mounted accelerometer **12** may be mounted to any structure or structures that enables it to accurately sense a desired movement. Such structures include, for example, the skull base, calvarum, clavicle, mandible, extraocular structures, soft tissues and vertebrae. Head-mounted accelerometer **12** is connected to stimulating and recording circuit **26** with an accelerometer connecting cable **31**.

[0085] A proximal electromyography (EMG) electrode array **45** is also included in certain preferred embodiments of the invention. Proximal EMG electrode array **45** includes a positive proximal EMG electrode **13**, a reference proximal EMG electrode **14**, and a negative proximal EMG electrode **15**. As one skilled in the relevant art would find apparent, proximal EMG electrode array **45** may include any number of type of electrodes. Proximal EMG electrode array **45** is implanted in or adjacent to muscle tissue. In the embodiment illustrated in **FIG. 1**, proximal EMG electrode array **45** is shown implanted within the neck of the human patient. However, it should be understood that this location is illustrative only and that proximal EMG electrode array **45** may be implanted in or adjacent to any muscle without departing from the spirit of the present invention.

[0086] A proximal acoustic sensor **27** may also be implemented in the present invention. Proximal acoustic sensor **27** senses muscle vibration and may be used to augment, supplement or replace EMG recording. Also, a proximal accelerometer **28** may be used to sense movement, including tremor and voluntary activity, and orientation with respect to gravity. Proximal connecting cable **16** provides electrical connection from the proximal EMG electrodes **14** and **15**, proximal acoustic sensor **27**, and proximal accelerometer **28** to stimulating and recording circuit **26**. In the illustrative embodiment, these sensors are shown connected to a common proximal connecting cable **16**. However, in alternative embodiments, this configuration may include the use of multiple connecting cables or implement other types of communication media without departing from the present invention. It should also be understood from the preceding description that the number of each type of sensor may also be increased or decreased, some sensor types may be eliminated, and other sensor types may be included without departing from the spirit of the present invention.

[0087] A distal EMG electrode array **47** may also be included in certain embodiments of the present invention. In such embodiments, distal EMG electrode array **47** typically includes a positive distal EMG electrode **17**, a reference distal EMG electrode **42**, and a negative distal EMG electrode **18**. Positive distal EMG electrode **17** is connected to stimulating and recording circuit **26** by positive distal EMG connecting cable **20**. Negative distal EMG electrode **18** is connected to stimulating and recording circuit **26** by negative distal EMG connecting cable **21**. Reference distal EMG electrode **42** is connected to stimulating and recording circuit **26** by reference distal EMG connecting cable **48**.

[0088] In other embodiments, a distal acoustic sensor **19** is connected to stimulating and recording circuit **26** by distal acoustic connecting cable **22**. Distal accelerometer **33** is connected to stimulating and recording circuit **26** by distal accelerometer connecting cable **34**. Distal accelerometer **33** is connected to stimulating and recording circuit **26** by distal accelerometer connecting cable **34**.

[0089] In the embodiment illustrated in **FIG. 1**, distal EMG electrode array **47**, distal acoustic sensor **19**, and distal accelerometer **33** are shown located in the shoulder region. However, the distal EMG electrode array **47** may be located in other locations, including, for example, the masseter, temporalis, sternocleidomastoid, other portion of the head and neck, pectoralis, torso, abdomen, upper extremities, lower extremities, and other locations. The number of each type of sensor may be increased or decreased, some sensor types may be eliminated, and other sensor types may be included without departing from the spirit of the present invention.

[0090] An enclosure-mounted EMG electrode array **46** is illustrated in **FIG. 1**. Enclosure-mounted EMG electrode array **46** includes enclosure-mounted positive EMG electrode **23**, enclosure-mounted negative EMG electrode **24** and enclosure-mounted reference EMG electrode **25**, all of which are attached to the circuit enclosure **44** that encloses stimulating and recording unit **26**. The circuit enclosure **44** is preferably included to provide robustness against potential lead entanglement and fracture. In one particular embodiment, circuit enclosure **44** is constructed of titanium and epoxy, or other single or combination of bio-compatible materials. Enclosure-mounted acoustic sensor **35** and enclosure-mounted accelerometer **36** are mounted to stimulating and recording unit **43**. The number of each type of sensor may be increased or decreased, their locations changed, some sensor types eliminated, and other sensor types included without departing from the spirit of the present invention.

[0091] In the embodiment illustrated in **FIG. 1**, EEG electrodes **39**, **40**, **41** are provided. The EEG electrodes may be mounted directly to connecting cable **8** or may be connected via intermediate cables. Any one of the numerous standard and new electrode configurations, or montages, may be employed in EEG electrodes **39-41** without departing from the present invention.

[0092] In one embodiment, a proximal peripheral nerve electrode array **98** is connected to stimulating and recording circuit **26** by proximal peripheral nerve electrode array

connecting cable **100**. Proximal peripheral nerve electrode array **98** is shown located in the neck region. In this location proximal peripheral nerve electrode array **98** can interface with the vagus nerve, spinal accessory nerve, or nerve arising from cervical roots.

[**0093**] A distal peripheral nerve electrode array **99** is connected to stimulating and recording circuit **26** by distal peripheral nerve electrode array connecting cable **32**. Distal peripheral nerve electrode array **99** is shown located by the proximal arm, in position to interface with the brachial plexus or proximal arm nerve. One or more of these peripheral nerve electrode arrays may be implanted in these or other locations, including but not limited to the head, cranial nerves, neck, torso, abdomen, upper extremities, and lower extremities, without departing from the present invention.

[**0094**] In one preferred embodiment, the peripheral nerve electrode arrays are each comprised of three epineural platinum-iridium ring electrodes, each in with an internal diameter approximately 30% larger than that of the epineurium, longitudinally spaced along the nerve. Electrodes of differing dimensions and geometries and constructed from different materials may alternatively be used without departing from the present invention. Alternative electrode configurations include but are not limited to epineural, intrafascicular, or other intraneural electrodes; and materials include but are not limited to platinum, gold, stainless steel, carbon, and other element or alloy.

[**0095**] **FIG. 2** is an architectural block diagram of one embodiment of the neurological control system **999** of the present invention for modulating the activity of at least one nervous system component in a patient. As used herein, a nervous system component includes any component or structure comprising an entirety or portion of the nervous system, or any structure interfaced thereto. In one preferred embodiment, the nervous system component that is controlled by the present invention includes the globus pallidus internus. In another preferred embodiment, the controlled nervous system component is the subthalamic nucleus.

[**0096**] The neurological control system **999** includes one or more implantable components **249** including a plurality of sensors each configured to sense a particular characteristic indicative of a neurological or psychiatric condition. One or more intracranial (IC) stimulating electrodes in an IC stimulating electrode array **37** delivers a neural modulation signal to the same or other nervous system component as that being monitored by the system **26**. One or more sensors **38**, **51**, **52**, **53**, and **54** sense the occurrence of neural responses to the neural modulation signals. Stimulating and recording unit **26** generates the neural modulation signal based on the neural response sensed by the sensors.

[**0097**] The neurological control system **999** preferably also includes a patient interface module **55** and a supervisory module **56**. A control circuit **72** (described below) is communicably coupled to the patient interface module **55** and receives signal inputs from and provides signal outputs to patient interface module **55** and supervisory module **56**. In one preferred embodiment, patient interface module **55** and supervisory module **56** remain external to the body of the patient. However either of these devices may be connected via percutaneous leads or be partially or totally implanted without departing from the present invention.

[**0098**] Patient interface module **55** and supervisory module **56** facilitate adjustment of control parameters, monitoring of disease state, monitoring of response to therapy, monitoring of stimulating and recording circuit **26**, monitoring of impedance and other characteristics of intracranial stimulating electrode array **37**, monitoring of physiologic parameters, monitoring of vital signs, monitoring of any other characteristic or function of components of the present invention, including but not limited to the stimulating and recording circuit **26**, stimulating and recording unit **43**, circuit enclosure **44**, EMG electrode array **50**, EEG electrode array **51**, accelerometer array **52**, acoustic transducer array **53**, peripheral nerve electrode array **54**, and intracranial recording electrode array **38**. Such monitoring and adjustment is accomplished through the use of any well known bi-directional communication between control circuit **72** and supervisory module **56**. In one preferred embodiment, a radio frequency link is employed. In alternative embodiments, other communication technologies, including but not limited to optical, percutaneous, or electromagnetic, may be used.

[**0099**] In one preferred embodiment, patient interface module **55** and supervisory module **56** are placed adjacent to the patients garments overlying the implanted stimulating and recording unit **43**. When neurological control system **999** is turned on in this position, a communications handshaking protocol is executed. Communication handshaking routines are known to those or ordinary skill in the art, and they enable establishment of a communication rate and protocol and facilitate mutual identification of devices. Patient interface module **55** automatically downloads parameters from stimulating and recording circuit **26** and stores values of such parameters in a memory. When the transfer of these parameter values is complete, patient interface module **55** emits a audible signal such as a series of beeps, and the patient turns off patient interface module **55** and removes it from its position overlying the implanted stimulating and recording unit **43**. Parameter values may then be retrieved by the patient by a routine including but not limited to a menu driven interface, and the values may be transmitted via telephone conversation or other communication method toga health care professional. Supervisory module **56** operates in the same manner with one addition; a step is provided during which the health care professional may upload parameters to stimulating and recording circuit **26** to alter its function including by means of changing parameters including but not limited to control laws gains and thresholds, filter parameters, signal processing parameters, stimulation waveform modes (including at least one of current regulated, voltage regulated, frequency regulated, or pulse width regulated), and stimulation waveform parameters.

[**0100**] Control laws, well known to those of ordinary skill in the field of control theory, are defined by a set of parameters specific to the particular control law. Common parameters include preset gains, threshold levels, saturation amplitudes, sampling rates, and others. Adaptive controllers change in response to the behavior of the system being controlled; as such, in addition to preset parameters, adaptive controllers possess a set of varying parameters. These varying parameters contain information indicative of the behavior of the system being controlled; downloading of these parameters provides one set of measures of the disease state and its response to therapy.

[0101] Such monitoring includes observation of time history of disease state, stimulation parameters, response to therapy, and control law parameters, including time-varying adaptive controller parameters. Such adjustments includes modification of actual stimulation parameters and allowable ranges thereof, including but not limited to pulse width, pulse amplitude, interpulse interval, pulse frequency, number of pulses per burst frequency. Adjustments can further include modification of actual control law parameters and allowable ranges thereof, including but not limited to gains, thresholds and sampling rates, of said stimulation waveforms. Signal processor **71** contains signal processor modules for each of the sensory input modalities **247**. Signal processing algorithms for each of the said sensory input modalities **247** may be independent. Additionally, signal processing algorithms the said sensory input modalities **247** may be coupled, such that the processing of one of the sensory input modalities **247** is dependent on another of the sensory input modalities **247**. Adjustments may additionally include modification of actual signal processor parameters and allowable ranges thereof, including but not limited to gains, filter cutoff frequencies, filter time constants, thresholds, and sampling rates. In a preferred embodiment, the stimulation and control law parameters are stored in at least one of random access memory and central processing unit registers (not shown).

[0102] It is anticipated that patient interface module **55** is to be used by the patient, a family member or associate, or home health care personnel to monitor the functions and performance of neurological control system **999**. In such an embodiment, the use of the patient interface module **55** is restricted to monitoring operations; adjustment of stimulation and control parameters is not enabled. However, adjustment of all or a subset of stimulation and control parameters (described below) may be facilitated by patient interface module **55** without departing from the present invention. Supervisory module **56**, on the other hand, is used by a physician or other health care personnel to monitor function and performance of neurological control system **999** and to adjust stimulation and control parameters. Control parameters controlled by patient interface module **55** and supervisory module **56** include allowable stimulation magnitude range, such as maximum combination of stimulation voltage, current, pulse width, pulse frequency, train frequency, pulse train count, pulse train duration. Control parameters may also include variables and constants used to define control laws implemented in control circuit **72**. Such control parameters include, but are not limited to, control law gains **197-203**, and other parameters for control laws, including but not limited to proportional controller **230**, differential controller **204**, integral controller **205**, nonlinear controller **206**, adaptive controller **207**, sliding controller **208**, model reference controller **209**, and other controllers. In addition, amplitudes for other controller parameters, including but not limited to amplitudes for controller weights **210-216** may be set by supervisory module **56**. Additionally, the parameters specifying the maximum amplitudes, or saturation values, may be set by supervisory module **56**. Control circuit **72** **(FIG. 12)** will be described in detail below.

[0103] The majority of the computation accomplished by stimulating and recording circuit **26** is performed in signal conditioning unit **76**, signal processor **71**, and control circuit **72**; the algorithms and behavior of which are determined by corresponding sets of control parameters, of which some may be set by the supervisory module **56** and a typically more restricted set by patient interface module **55**. In one embodiment, control parameters further includes signal conditioning parameters. Signal conditioning parameters may include, for example, amplifier gains, filter gains and bandwidths, threshold values, and other parameters. In certain embodiments, control parameters additionally include signal processing parameters, including envelope determinator gains and time constants, filter passbands, filter gains, threshold values, integrator gains, analyzer parameters, disease state estimator parameters, artifact rejecter thresholds, envelope determinator time constants, rectifier parameters, spectral analyzer parameters and timer parameters.

[0104] In the illustrative embodiment described herein, control parameters further include spike detector **188** **(FIG. 9)** parameters, spike characterizer **189** **(FIG. 9)** parameters, spike analyzer **190** **(FIG. 9)** parameters, spectral energy characterizer **192** **(FIG. 9)** parameters, spectral energy analyzer **193** **(FIG. 9)** parameters, aggregate disease state estimator **195** **(FIG. 10)** parameters.

[0105] In accordance with the present invention, tremor are quantified and monitored by any sensors over time as indicators of disease state. Such sensors include but are not limited to EMG electrode array **50**, EEG electrode array **51**, accelerometer array **52**, acoustic transducer array **53**, peripheral nerve electrode array **54**, intracranial recording electrode array **38**, and intracranial stimulating electrode array **37**. In one particular embodiment, the sensed tremor characteristics include, but are not limited to, magnitude, frequency, duration and frequency of occurrence of tremors. Changes in these and other parameters are compared to current levels of, and changes in, treatment parameters. These changes are then used by aggregate disease state estimator **195** to estimate the response to therapy as functions of various electrical stimulation treatment parameters. Electrical stimulation treatment parameters are adjusted by control circuit **72** in real-time to provide optimal control of disease state.

[0106] Modulation parameters are optimized to achieve at least one of minimization of disease state, minimization of symptoms of disease, minimization of stimulation magnitude, minimization of side effects, and any constant or time-varying weighted combination of these. Patient interface module **55** and supervisory module **56** also preferably monitor the function and operation of other components of neurological control system **999**, including stimulating and recording unit **26** and implanted components **249**.

[0107] Stimulating and recording unit **26** receives and processes signals generated by implanted components **249** to provide conditioned signals **78-84** to a signal processor **71**. For each type of implanted components **249** coupled to stimulating and recording unit **26**, signal conditioning circuit **76** preferably includes an associated amplifier and filter. Each amplifier and associated filter is configured to receive and process the signal generated by the associated one of the set of sensors **38**, **51**, **52**, **53**, and **54**.

[0108] In the illustrative embodiment, implanted components **249** include an electromyography (EMG) electrode array **50** which generate EMG signals. Preferably, EMG electrode array **50** comprises of all EMG electrodes implemented in the particular embodiment of the present invention. These include, in the exemplary embodiment illustrated

in **FIG. 1**, proximal EMG electrode array **45**, enclosure-mounted EMG electrode array **46** and distal EMG electrode array **47**. Array **50** may also include, for example, EMG electrodes implanted in the head or other location, and surface EMG electrodes.

[**0109**] Implanted components **249** also include an electroencephalography (EEG) electrode array **51** which generate EEG signals and accelerometer array **52** which generates acceleration signals. EEG electrodes **39**, **40**, **41** illustrated in **FIG. 1** are representative of EEG electrode array **51**. EEG electrodes **39-41** may be mounted directly to connecting cable **8** or connected via intermediate cables. EEG electrode array **51** may include more or fewer elements than EEG electrodes **39-41** depicted; and any of numerous standard and new electrode configurations, or montages, may be employed without departing from the present invention.

[**0110**] Accelerometer array **52**, which produces well-known acceleration signals, preferably includes all accelerometers implemented in the patient associated with the present invention. For example, in the embodiment illustrated in **FIG. 1**, accelerometer array **52** includes head-mounted accelerometer **12**, proximal accelerometer **28**, enclosure-mounted accelerometer **36** and distal accelerometer **33**. Accelerometer array **52** may include more or fewer accelerometers than these accelerometers, and accelerometers of any types and locations may be employed without departing from the present invention.

[**0111**] Acoustic transducer array **53** includes all acoustic sensors utilized by the present invention. In the exemplary embodiment illustrated in **FIG. 1**, acoustic transducer array **53**, includes head-mounted acoustic sensor **11**, proximal acoustic sensor **27**, enclosure-mounted acoustic sensor **35** and distal acoustic sensor **19**. It should be understood that acoustic transducer array **53** may include more or fewer elements than said acoustic sensors listed above; and any of numerous acoustic sensor types and locations may be employed without departing from the present invention.

[**0112**] Peripheral nerve electrode array **54** generates peripheral neural signals, including but not limited to efferent and afferent axonal signals. Preferably, peripheral nerve electrode array **54** includes all peripheral nerve electrodes implemented in present invention. For example, in the illustrative embodiment illustrated in **FIG. 1**, peripheral nerve electrode array **54** includes proximal peripheral nerve electrode array **98** and distal peripheral nerve electrode array **99**. The single or plurality of individual peripheral nerve electrode arrays which comprise peripheral nerve electrode array **54** may be implanted in the illustrated or other locations, as noted above.

[**0113**] Intracranial (IC) recording electrode array **38** generates central neural signals, including but not limited to cortical, white matter, and deep brain nuclear signals. Neural activity to be sensed includes but is not limited to that found in the primary motor cortex, premotor cortex, supplementary motor cortex, somatosensory cortex, white matter tracts associated with these cortical areas, the globus pallidus internal segment, the globus pallidus external segment, the caudate, the putamen, and other cortical and subcortical areas. As one of ordinary skill in the relevant art will find apparent, the present invention may include additional or different types of sensors that sense neural responses for the type and particular patient. Such sensors generate sensed signals that may be conditioned to generate conditioned signals, as described below. One example of the placement of these electrodes is described above with reference to the embodiment illustrated in **FIG. 1**. Many others are contemplated by the present invention.

[**0114**] As noted, for each of the different types of sensors included in implanted components **249**, signal conditioning circuit **76** includes an associated amplifier and filter in the illustrative embodiment. Accordingly, signal conditioning circuit **76** includes an EMG amplifier **59** and filter **66**, each constructed and arranged to amplify and filter, respectively, the EMG signals received from EMG electrode array **50**. Similarly, signal conditioning circuit **76** also includes an EEG amplifier **60** and filter **67**, accelerometer (ACC) amplifier **61** and filter **68**, acoustic (ACO) amplifier **62** and filter **69**, peripheral nerve electrode (PNE) amplifier **63** and filter **70** and intracranial (IC) recording electrode (ICRE) amplifier **58** and filter **65**.

[**0115**] Simplifiers **57-63** may be single or multi-channel amplifiers depending upon the number of electrodes with which it interfaces. In one preferred embodiment, amplifiers **57-63** are physically located in the same enclosure as filters **64-70**; that is, in a single signal conditioning circuit **76**. Preferably, signal conditioning circuit **76** is physically contained within stimulating and recording unit **102**. However, amplifiers **57-63** may be located separately from stimulating recording unit **102**. For example, amplifiers **57-63** may be affixed to or situated proximate to their associated electrode arrays **38**, **50-54**. This arrangement facilitates the preamplification of the associated signals generated by the associated electrode arrays **38**, **50-54**, increasing the signal-to-noise ratio of the signals. Amplifiers **57-63** may be any known voltage amplifier now or later developed suitable for amplifying the particular signals generated by their associated electrodes.

[**0116**] As noted, the amplified signals are passed to their associated filters **64-70** as shown in **FIG. 2**. As with amplifiers **57-59**, filters **64-70** may be physically separate from or incorporated into signal conditioning circuit **76** and stimulating and recording unit **26**. In one preferred embodiment, filters **64-70** are low pass filters having a cut-off frequency of, for example, 3,000 Hz. In alternative embodiments, filters **64-70** may include a notch filter to remove, for example, 60 Hz noise, or other types of filters appropriate for the type of signals generated by the associated sensors **38**, **51**, **52**, **53**, and **54**. Selection of the appropriate frequencies for the cut-off and notch filter frequencies is considered to be well known in the relevant art and within the scope of the present invention. Filters **66-70**, **65** and **64** generate conditioned sensed signals **84**, **83** and **78-82**, respectively.

[**0117**] Signal processor **71** processes the conditioned sensed neural response signals **78-84** generated by signal conditioning circuit **76** in accordance with the present invention to determine neural system states. Signal processor **71** generally performs well known filtering operations in the time and frequency domains. In one preferred embodiment, the neural system states include one or more physiologic or disease states. Signal processor **71**, which can be implemented in a fast microprocessor, a DSP (digital signal processor) chip, or as analog circuitry, for example, is described in detail below.

[**0118**] Control circuit **72**, responsive to the signal processor **71**, patient interface module **55** and supervisory module

56, adjusts the magnitude of a neural modulation signal in response to the sensed neural response. Signal processor **71** extracts relevant information from the sensed condition signals, and control circuit **72** uses this extracted information in the calculation of an output neuromodulation signal (NMS) **998**. Neuromodulation signal **998** subsequently travels along stimulator output path **111** to IC stimulating electrode array **37**. In one embodiment, control circuit **72** is a state machine, utilizing current and past system behavior in the calculation of a control signal. In an alternative embodiment, control circuit **72** includes an embedded microprocessor to process nonlinear control laws. Alternative embodiments of the control circuit **72** appropriate for the particular application may be also be used.

[**0119**] Control circuit **72** receives control law selection information, control law parameter information, stimulation waveform parameter range information, stimulation modulation mode, output stage regulation mode, and medication dose and timing information from patient interface module **55** and supervisory module **56**. The waveform parameter or parameters which are modulated by control law output signal U **997** are determined by the stimulation modulation mode; these parameters include but are not limited to pulse amplitude, pulse width, pulse frequency, pulses per burst, and burst frequency. Selection between regulation of pulse voltage or pulse current as the regulated pulse amplitude is determined by the output stage regulation mode.

[**0120**] Control circuit **72** provides stimulation waveform parameter history information, disease state history information, control law state variable history information, control law error history information, control law input variable history information, control law output variable history information, stimulating electrode impedance history information, sensory input history information, battery voltage history information, and power consumption history information to patient interface module **55** and supervisory module **56**.

[**0121**] Provision of stimulating electrode impedance history information allows monitoring of stimulating electrode performance and functionality. If an electrode is determined to be fractured, shorted, or encapsulated by fibrotic tissue, any of various control law parameters, output stage parameters, and waveform range parameters may be adjusted to allow compensation for these changes. Additionally, the Neuromodulation Signal (NMS) **998** may be delivered to different sets of electrodes to insure that it reaches neural tissue **250**. Sensory input history information allows evaluation of validity of any given sensory input. This is useful in determining the functionality of a given sensor and serves as an indicator for sensor replacement or adjustment of the signal processing parameters or algorithm or the control law parameters or algorithm to continue to generate reliable disease state estimate signals X and control law outputs U despite the loss of any particular individual or set of sensory signals.

[**0122**] Signal processor **71** receives amplifier gain setting information, filter parameter information, weighting information, and disease state estimator parameter and algorithm information from patient interface module **55** and supervisory module **56**. The function and operation of patient interface module **55** and supervisory module **56** are described above. As noted, patient interface module **55** may be used by the patient or home health care personnel to monitor disease state, stimulation parameters, and response to therapy. Limited adjustment of stimulation parameters and ranges is facilitated. Patient interface module **55** may be used by the patient or home health care personnel to provide information to the physician, avoiding the need for an office visit for the obtainment of said information.

[**0123**] Patient information module **55** queries signal processor **71** for present and time histories of monitored values. Time histories of selected variables in signal processor **71** and control circuit **72** are stored in memory module **240** for subsequent retrieval by patient interface module **55** and supervisory module **56**. Selected variables include but are not limited to disease state, tremor frequency, tremor magnitude, EMG magnitude, EMG frequency spectra (EMG magnitude within frequency ranges), and acceleration of limb, head, mandible, or torso. Selected variables may also include disease state, frequency spectra of limb, torso, and head movements, as determined by EMG and accelerometer signals.

[**0124**] Stimulating and recording unit **26** also includes an output stage circuit **77**. Output stage circuit **77** takes for an input the control law output signal U, which may be comprised of a single or multiplicity of channels or signals, from control circuit **72**. This control law output signal U **997** modulates the magnitude of the sequence of waveforms comprising the desired output neuromodulation signal (NMS_D) which is produced by output stage circuit **77** and delivered via intracranial stimulating electrode array **37** to neural tissue **250**.

[**0125**] Output stage circuit **77** generates a neuromodulation signal (NMS_D) **998** with a magnitude specified by control law output signal U **997** received from control circuit **72**. In one preferred embodiment, the waveform parameter of the desired output neuromodulation signal (NMS_D) which is modulated by control law output signal U is the stimulation current magnitude. The capability to specifically modulate the stimulation current confers efficacy resistance to perturbations or changes in electrode impedance. Presently implanted systems suffer from a decline in efficacy which results from an increase in electrode impedance which accompanies the normal tissue response to a foreign body, that is fibrotic encapsulation of the electrode. In this design taught in the present invention, a the magnitude of the current delivered to the neural tissue **250** will not vary as the electrode becomes encapsulated with fibrotic tissue or its impedance otherwise changes over time. A further advantage conferred by current modulation is the ability to monitor electrode impedance. If a current-modulated waveform, preferably a sinusoid, is delivered to the electrodes, and the resultant voltage potential waveform is concurrently monitored, the relative magnitudes and phase shifts of these waveforms may be computed. From these magnitudes and phases, the complex impedance and hence the resistive and capacitive components of the electrode impedance may be calculated.

[**0126**] In an alternative embodiment, the waveform parameter of the desired output neuromodulation signal (NMS_D) which is modulated by control law output signal U **997** is the stimulation voltage magnitude. This design would not enjoy the independence of the stimulation current and efficacy from impedance variation enjoyed by the embodi-

ment described above. If fibrosis was uneven around the surface of the electrode, this embodiment would avoid potentially undesirably large current densities along narrow tracts of remaining low resistance unfibrosed regions of neural tissue **250**.

[**0127**] Alternatively, regulation of stimulus pulse width may be desired. In certain circuit implementations, the available resolution or bits for specifying the magnitude of pulse width may be greater than that for specifying the pulse voltage or current. In such a case, if finer control of the magnitude of Neuromodulation signal (NMS) **998** is desired than is provided by the control of pulse current or pulse voltage, then it may be desirable to modulate the pulse width. Furthermore, the spatial neuron recruitment characteristics of a pulse width modulated neuromodulation signal (NMS) **998** may provide a more linear, predictable, or controllable response than that obtained with current or voltage modulation. Selection between regulation of pulse voltage, pulse current, or pulse width as the regulated pulse amplitude parameter is determined by the output stage regulation mode, which may be set using supervisory module **56**. In alternative embodiments, the modulation of pulse frequency and the modulation of the number of pulses per burst are regulated. As one of ordinary skill in the relevant art would find apparent. Other such characteristics may be regulated in addition to or instead of the ones noted above.

[**0128**] Output stage circuit **77** includes a pulse generator **73**, an output amplifier **74** and a multiplexor **75**. Pulse generator **73** generates one or more stimulus waveforms, each of which is characterized by several parameters, including but not limited to pulse amplitude, pulse width, pulse frequency, number of pulses per burst, and burst frequency. As noted above, pulse amplitude may comprise pulse voltage or pulse current. Preferably, each of these parameters may be independently varied, as specified by control law output signal U **997** generated by control circuit **72**. As noted, the stimulus waveforms comprising the neuromodulation signal (NMS) generated by output stage circuit **77** are applied to patient through intracranial (IC) stimulating electrode array **37**. Pulse generator **73** generates a single waveform when single channel stimulation is to be used, and a plurality of waveforms when multiple channel stimulation is to be used. It may generate monophasic or biphasic waveforms.

[**0129**] In one preferred embodiment, charge balanced biphasic waveforms are produced. Those skilled in the art are aware that the net charge contained in a given pulse is given by the time integral of the stimulus current over the duration of the pulse. In a biphasic configuration, a pair of pulses of opposite polarity is generated, and the pulse current amplitude and pulse width are chosen such that the charge amplitude is equal in magnitude and opposite in polarity. In some cases, it is desirable for the pulses comprising the biphasic pulse pair to have different amplitudes; in this case, the pulse widths are chosen to insure equal and opposite charges so the pulse par introduces zero net charge to the neural tissue **250**. The capability to deliver pulse pairs with balanced charges is yet a further advantage conferred by the current regulation mode described above.

[**0130**] Even though the waveform parameters of the pulse pairs are calculated to deliver a zero net charge, in practice, noise and precision limitations in computation and resolution limitations and nonlinearities in the digital to analog conversion and amplification stages may result in slight imbalances in the pulse pair charges. Over time, this can result in the delivery of a substantial accumulated net charge to the neural tissue. To eliminate this potential for net charge delivery to neural tissue, a direct current (DC) blocking capacitor is employed. This is a technique that is well known to those or ordinary skill in the art. In one preferred embodiment, a DC blocking capacitor is included within multiplexor **75** in series with stimulator output path **111**.

[**0131**] Typically, multi-channel stimulation is used in the case of bilateral stimulation. Since the disease progression is typically asymmetrical, and the normal motor control systems governing movement on the left and right side of the body are also highly independent of each other, the delivery of treatment to the left and right sides of the body should be controlled separately. This represents one need for a multiple channel neuromodulation signal (NMS) **998**. Multichannel stimulation is also expected to be beneficial in treating patients with variable involvement of different limbs. For example, the magnitude neuromodulation of a portion of the globus pallidus required to achieve optimal controls of arm tremor may be different from the optimal level of neuromodulation of separate portion of the globus pallidus to achieve optimal control of leg tremor. In this case, separate electrodes or electrode pairs are required to deliver optimal levels of neuromodulation to control tremor in these two regions of the body. Correspondingly, these separate electrodes or electrode pairs will be driven by separate neuromodulation signal (NMS) channels, necessitating a multichannel system.

[**0132**] A further need for multichannel neuromodulation signal (NMS) is the control of multiple symptoms of the movement disorder and the side effects arising from pharmacologic treatment. Optimal control of tremor, dyskinesias, and rigidity are not achieved by modulation of the same site at the same intensity. For this reason, multiple and separately controlled channels of neuromodulation are required to simultaneously achieve optimal control of these multiple symptoms and side effects. Each of these symptoms and side effects may be considered to comprise one or more element in a multivariable disease state. A multivariable control system will be required to optimally drive each of these disease state elements to its desired value, ideally toward a target minimum level and thus achieve optimal control of this multiplicity of disease states. This multivariable control system may be implemented as multiple independent control laws each with separate though potentially overlapping sensory inputs or as a multivariable control law matrix.

[**0133**] Stimulation via each of the multiple channels comprising the neuromodulation signal (NMS) **998** is characterized by separate though possibly overlapping sets of one or more of the following parameters: stimulation voltage, stimulation current stimulation frequency of pulses within the same burst, frequency of bursts, pulse width, pulses per burst, duration of burst, and interpulse interval. The stimulus waveforms are amplified by output amplifier **74** to generate an amplified stimulus waveform. Specifically, pulse generator **73** transfers information to output amplifier **74** which includes information that uniquely specifies the desired stimulation waveform. In a preferred embodiment, the information is in the form of an analog signal which represents

a scaled version of the voltage or current waveform to be delivered to the tissue. It should be understood that other forms of the signal generated by pulse generator **73** may be used, including combinations of at least one of analog and digital representations. Output amplifier **74** performs amplification and regulation of the received stimulus waveform generated by the pulse generator **73**. This may be regulation of electrical current to achieve desired voltage or regulation of electrical voltage to achieve desired current, depending on whether a voltage or current waveform is to be delivered to the nervous system component.

[**0134**] As one skilled in the relevant art would find apparent, voltage regulation is simpler to implement, and is a technique which is commonly used by many conventional stimulators. Current regulation, on the other hand, is more complex but allows for more precise control of the applied stimulation. Current regulation insures that a specified amount of current is delivered, regardless of the impedance of the electrode. Current regulation is advantageous in that it allows for precise control of stimulation level despite changes in electrode impedance which invariably occur over time. Since electrode impedances often change, typically increasing as they become encapsulated by fibrosis, current regulation is preferred to avoid the decrease in current which would occur if voltage regulation were to be used in such circumstances.

[**0135**] The amplified stimulus waveform generated by output amplifier **74** is conducted along stimulator amplifier output path **112** to multiplexor **75**. Multiplexor **75** allows for delivery of a stimulating electrode output signal (SEOS) to the intracranial stimulating electrode array **37**, multiplexed with sensing of a stimulating electrode input signal (SEIS). Specifically, multiplexor **75** serves to alternately connect intracranial stimulating electrode (ICSE) array **37** to output amplifier **74** and intracranial stimulating electrode amplifier **57**. Connection of intracranial stimulating electrode (ICSE) array **37** to output amplifier **74** facilitates delivery of neural modulation signal to neural tissue, while connection of intracranial stimulating electrode (ICSE) array **37** to intracranial stimulating electrode amplifier **57** facilitates monitoring of neural activity in the region being stimulated.

[**0136**] Multiplexor **75** allows delivery of neural modulation signals to neural tissue concurrent with monitoring of activity of same neural tissue; this facilitates real-time monitoring of disease state and response to treatment. Stimulating electrode output signal (SEOS) from output amplifier **74** is conducted along stimulator amplifier output path **112** to multiplexor **75**. Multiplexor **75** conducts output from output amplifier **74** to stimulator output path **111** which conducts the stimulating electrode output signal to intracranial stimulating electrode array **37**. To facilitate periodic sampling of neural activity in tissue being stimulated, multiplexor **75** alternatively conducts signal arising from stimulated tissue via intracranial stimulating electrode array (ICSE) **37** and stimulator output path **111** to multiplexed stimulator recording input path **113** and intracranial stimulating electrode amplifier **57**.

[**0137**] Multiplexor **75** selectively conducts the signal on multiplexed stimulator recording input path **113** to amplifier **57**. Multiplexor **75** may alternate conduction between path **111** and path **112** or path **113** using temporal multiplexing, frequency multiplexing or other techniques to allow concurrent access to the intracranial stimulating electrode (ICSE) array **37** for modulation of tissue activity and monitoring of tissue activity. Temporal multiplexing is a well known technique and frequency multiplexing of stimulation and recording signals in known to those skilled in the art. In this embodiment, temporal multiplexing is accomplished by alternately connecting stimulator output path **111** to stimulator amplifier output path **112** and multiplexed stimulator recording input path **113**. In one embodiment, frequency multiplexing is accomplished by passing a band-limited portion of stimulating electrode output signal SEOS via the stimulator output path **111** to intracranial stimulating electrode array **37** while simultaneously monitoring activity on intracranial stimulating electrode array **37** within a separate frequency band, thereby generating a stimulating electrode input signal SEIS. Thus, stimulating electrode input signal SEIS is conducted from the intracranial stimulating electrode array **37** to stimulator output path **111** to multiplexor **75** and via multiplexed stimulator recording input path **113** to intracranial stimulating electrode array amplifier **57**.

[**0138**] Multiplexor **75** facilitates conduction between stimulator amplifier output path **112** and multiplexed stimulator recording input path **113** to allow automated calibration. In this mode, a calibration signal of known amplitude is generated by pulse generator **73** and amplified by output amplifier **74** which, for calibration purposes, delivers a voltage regulated signal via stimulator amplifier output path **112** to multiplexor **75**. Multiplexor **75** conducts amplified calibration signal to multiplexed stimulator recording input path **113** which conducts signal to intracranial stimulating electrode amplifier **57**.

[**0139**] Although not included in the illustrative embodiment, multiplexed or intermittent connection of stimulator amplifier output path **112** to the inputs of at least on of the other amplifiers, including EMG amplifier **59**, EEG amplifier **60**, accelerometer amplifier **61**, acoustic amplifier **62**, peripheral nerve electrode amplifier **63**, and intracranial recording electrode amplifier **58**, may be implemented without departing from the present invention. The same multiplexed connections may be used to calibrate the pulse generator **73** and output amplifier **74**.

[**0140**] Referring to **FIG. 15**, an analog switch may be used to connect one or an opposing polarity pair of Zener diodes across the noninverting and inverting inputs of intracranial recording electrode amplifier **58**. In this configuration, the Zener diodes would limit the maximal amplitude of the calibration signal in one or both polarities to known values, allowing for accurate calibration of intracranial recording electrode amplifier **58**. The analog switch may then be deactivated, removing the cathode of the single or pair of Zener diodes from the input of intracranial recording electrode amplifier **58** to allow measurement of stimulating electrode output signal (SEOS) for calibration of pulse generator **73** and output amplifier **74**. This is described in greater detail below.

[**0141**] Multiplexor **75** also facilitates conduction between stimulator amplifier output path **112**, multiplexed stimulator recording input path **113**, and stimulator output path **111** to allow measurement of impedances of components of intracranial stimulating electrode array **37**. In this electrode impedance measurement mode, a three way connection between stimulator amplifier output path **112**, multiplexed

stimulator recording input path **13**, and stimulator output path **111** is created. When output amplifier **74** is operated in current regulated mode, it delivers an SEOS of known current via stimulator output path **111** to intracranial stimulating electrode array **37**. The voltages generated across the elements of intracranial stimulating electrode array **37** generally are the products of the electrode impedances and the known stimulating currents. These voltages are sensed as the stimulating electrode input signal SEIS by the intracranial stimulating electrical amplifier **57**.

[**0142**] Reference module **116** contains memory registers in which control law reference values are stored. Such reference values include but are not limited to target disease state levels, target symptom levels, including target tremor level, and threshold levels. Threshold levels include but are not limited to disease and symptom levels, including tremor threshold levels. Neural modulation amplitude may be increased when at least one of disease state and symptom level exceed the corresponding threshold. Similarly neural modulation amplitude may be decreased or reduced to zero when either the disease state or symptom level falls below the corresponding threshold.

[**0143**] Reference module **116** is connected to patient interface module **55**, facilitating both monitoring and adjustment of reference values by patient. Reference module **116** is also connected to supervisory module **56**, facilitating both monitoring and adjustment of reference values by physician or other health care provider. Supervisory module **56** may be used by the neurologist, neurosurgeon, or other health care professional, to adjust disease state reference R values for the one or more control laws implemented in control circuit **72**. The disease state reference R values specify the target level at which the corresponding disease states are to be maintained, as quantified by the disease state estimate X values, providing reference values for control laws implemented in control law circuit block **231** (**FIG. 11**; discussed below) and contained within control circuit **72**. Reference module **116** may also receive input from control circuit **72**, facilitating the dynamic adjustment of reference disease state "r" (discussed below). Reference module **116** may additionally receive input from disease state estimator module array (DSEMA) **229** (**FIG. 11**; discussed below) and aggregate disease state estimator **195** (**FIG. 11**; discussed below) and components of signal processor **71**, for use in dynamically determining reference disease state "r".

[**0144**] **FIG. 10** is a schematic diagram of signal processor **71**. In this illustrative embodiment, signal processor **71** includes a disease state estimator module array **229** that includes one or more signal processor modules that generate a quantitative estimate of at least one disease state or parameter thereof based upon its respective input. For example, magnitude of tremor in the 3 to 5 Hz range represents one possible representation of a disease state. This could be an absolute or normalized quantification of limb acceleration in meters per second squared. This component of the disease state would be calculated almost exclusively from sensory feedback from accelerometer array **52**. Another possible disease state is the frequency of occurrence of episodes of tremor activity per hour. This element of the disease state may be estimated from any of several of the sensory feedback signals. In this case, the most accurate representation of this disease state element is obtained by applying a filter such as a Kalman filter to calculate this parameter based upon a weighted combination of the sensory feedback signals. Such weighting coefficients are calculated from quantified measures of the accuracy of and noise present upon each sensory feedback channel.

[**0145**] In the illustrative embodiment, disease state estimator module array **229** includes an EMG signal processor **233**, EEG signal processor **234**, accelerometer signal processor **235**, acoustic signal processor **236**, peripheral nerve electrode (PNE) signal processor **237**, intracranial recording electrode (ICRE) signal processor **238**, and intracranial stimulating electrode (ICSE) signal processor **239**. It should be understood that other signal processors may also be included in the array **229**. Inputs to these modules include conditioned EMG signal path **78**, conditioned EEG signal path **79**, conditioned accelerometer signal path **80**, conditioned acoustic signal path **81**, conditioned peripheral nerve electrode (PNE) signal path **82**, conditioned intracranial recording electrode (ICRE) signal path **83**, and conditioned intracranial stimulating electrode (ICSE) signal path **84**, respectively. Communication between these modules is facilitated. The output(s) of each of the modules is connected to an aggregate disease state estimator **195**. Aggregate disease state estimator **195** generates a single or plurality of disease state estimates "X" indicative of state of disease and response to treatment.

[**0146**] In the preferred embodiment, the acceleration of at least one of the affected limb and the head, each of which is sensed as a sensory feedback channel by an element of the accelerometer array **52**, serves as respective elements in the disease state estimate X. These elements of disease state estimate X are inputs to respective control laws implemented in control circuit **72**. of input to the control law. A control law governing the function of a proportional controller using acceleration as its single sensory feedback channel is given by equation (1):

$$u_1=0.316(V*S^2/m)*ACC \quad (1)$$

and if

$$u_2=0.6333(V*S^2/m)*ACC \quad (2)$$

[**0147**] where u_1 and u_1 are the stimulation voltage given in volts; and ACC is the limb, mandible, or head acceleration given in meters per second squared (m/s^2).

[**0148**] In equation (1), the stimulation site is the ventroposterolateral pallidum, the output stage mode is voltage regulated, the waveform is a continuous train of square waves, the amplitude u_1 is given in volts (typically approximately 1 volt), and the remaining stimulation parameters include a pulse width of 210 microseconds, and a stimulation frequency of 130 Hz. In equation (2), the stimulation site is the ventral intermediate thalamic nucleus (Vim), the output stage mode is voltage regulated, the waveform is an intermittent train of square waves with an on time of 5 minutes and an off time of 45 seconds, the amplitude u_2 is given in volts (typically approximately 3 volts), and the remaining stimulation parameters include a pulse width of 60 microseconds, and a stimulation frequency of 130 Hz.

[**0149**] In one preferred embodiment, the ACC signal represents the average acceleration over a finite time window, typically 15 to 60 seconds. This effective lowpass filtering provides a stable sensory feedback signal for which a proportional control law is appropriate. If stability and

performance requirements dictate, as is familiar to those practiced in the art of feedback control, other components, including an integrator and a differentiator may be added to the control law to produce a proportional-integral-differential (PID) controller, as needed.

[0150] One preferred embodiment also includes electromyographic (EMG) signals as sensory feedback in the calculation of at least one element of the disease state estimate X which is an input to the control law. As discussed in the section describing EMG signal processor **233**, the EMG signals are rectified by full wave rectifier **123**, passed through envelope determiner **124**, passed through several bandpass filters **125**, **127**, **129**, **131**, **133** and associated threshold discriminators **126**, **128**, **130**, **132**, **134** and then passed in parallel to each of integrator **135** and counter **136**. Integrator **135** generates an output which is a weighted function of it inputs and represents the average magnitude of tremor activity over a given time window −w/2 to +w/2. A simplified representation of this is given by equation (3):

$$u_3=\int_{-w/2}^{w/2} X_{EMG}-dt \tag{3}$$

[0151] over a given time window −w/2 to +w/2. A simplified representation of this is given by the equation:

[0152] As is familiar to those skilled in the art of control theory, an integral controller is marginally stable. To confer stability to this control law, the equivalent of a finite leak of the output magnitude u_4 to zero is added to maintain stability. A more general form of this equation is given by equation (4):

$$-C_1\partial u_4/dt+C_2\cdot u_4=B_1\cdot\partial X_{EMG}/dt+B_2\cdot X_{EMG} \tag{4}$$

[0153] Shown as a system function, the control law output U is given as the product of a transfer function H(s) and the disease estimate X, the input to the control law:

$$u(s)(C_1\circ s+C_2)=X_{EMG}(s)(B_1\circ s+B_2) \tag{5}$$

$$u(s)/X_{EMG}(s)=(B_1\circ s+B_2)/(C_1\circ s+C_2) \tag{6}$$

$$H(s)=u(s)/X_{EMG}(s)=(B_1\circ s+B_2)/(C_1\circ s+C_2) \tag{7}$$

[0154] One such control law with an appropriate time response is given by:

$$H(s)=u(s)/X_{EMG}(s)=G_{VIEMG}(0.1\circ s+1)/(2\circ s+1) \tag{8}$$

[0155] where $G_{V/EMG}$ is the gain in neuromodulation signal (NMS) (volts per volt of EMG signal).

[0156] For intramuscular EMG electrodes, signal amplitudes are on the order of 100 microvolts. For neuromodulation signal (NMS) parameters of 2 volts amplitude, 60 microseconds pulse width, 130 Hz stimulation frequency, the appropriate overall gain $G'_{V/EMG}$ is 20,000 $volts_{NMS}/volts_{EMG}$. Since the preamplifier stage performs amplification, **1000**, in the preferred embodiment, the actual value for $G_{V/EMG}$ as implemented in the control law is 20 $volts_{NMS}/volts_{PREAMPL\ EMG}$.

[0157] Disease state estimator **195** determines estimates of disease state including but not limited to long-term, or baseline, components, circadian components, postprandial components, medication induced alleviation of components, medication induced components, and future predicted behavior of said components. Output of disease state estimator **195** includes output of observer **228**, depicted in **FIG. 11**, which makes use of an adaptive model of disease behavior to estimate disease states which are not directly detectable from sensors. Such sensors provide input to the adaptive model to correct state estimates and model parameters. Each of the signal processor modules in disease state estimator module array **229** are described below.

[0158] **FIG. 3** is a block diagram of intracranial recording electrode (ICRE) signal processor **238** and intracranial stimulating electrode (ICSE) signal processor **239**, each of which are included within signal processor **71** in the illustrative embodiment illustrated in **FIGS. 2 and 10**. ICRE signal processor module **238** and ICSE signal processor module **239** process signals from one or more intracranial electrodes, including but not limited to those comprising intracranial recording electrode array **38** and intracranial stimulating electrode array **37**. As noted, intracranial stimulating electrode array **37** is comprised of one or more intracranial stimulating electrodes while intracranial recording electrode array **38** is comprised of one or more intracranial recording electrodes.

[0159] Input to ICRE signal processor **238** is conditioned intracranial recording electrode (ICRE) signal path **83** noted above. This input is connected to a spike detector **85** which identifies action potentials. Spike detection techniques are well known to those skilled in the art and generally employ low and high amplitude thresholds. Waveforms having amplitudes greater than the low threshold and lower than the high threshold are determined to be action potentials. These thresholds may be predetermined or adjusted manually using supervisory module **56** or may be adapted in real-time by an algorithm which sweeps the threshold through a range of values to search for values at which action potential spikes are consistently recorded. The low amplitude threshold is set above the amplitude of background noise and that of nearby cells not of interest, and the high amplitude threshold is set above the amplitude of the desired action potentials to allow their passage while eliminating higher amplitude noise spikes, such as artifacts arising from electrical stimulation currents. Bandpass, notch, and other filtering techniques may also be used to improve signal to noise ratio and the sensitivity and specificity of spike detectors. Individual neuron action potentials are usually recorded using fine point high-impedance electrodes, with impedances typically ranging from 1 to 5 megohms. Alternatively, larger lower-impedance electrodes may be used for recording, in which case the signals obtained typically represent aggregate activity of populations of neurons rather than action potentials from individual neurons. Spike detector **85** passes the waveform(s) to a spike characterizer **86**. Spike characterizer **86** determines firing patterns of individual neurons. The patterns include, for example, tonic activity, episodic activity, and burst firing. Spike characterizer **86** calculates parameters that characterize the behavior of the individual and groups of neurons, the activity of which is sensed by intracranial recording electrode array **38**. In one embodiment, the characterization includes parameterization of recorded action potentials, also referred to as spikes, bursts of spikes, and overall neural activity patterns. This parameterization includes, but is not limited to, calculation of frequencies of spikes, frequencies of bursts of spikes, interspike intervals, spike amplitudes, peak-to-valley times, valley-to-peak times, spectral composition, positive phase amplitudes, negative phase amplitudes, and positive-negative phase differential amplitudes. These parameters are

depicted in **FIG. 14** and are discussed below. Based on these parameterization, spike characterizer **86** discriminates individual spikes and bursts originating from different neurons. This discrimination facilitates serial monitoring of activity of individual and groups of neurons and the assessment and quantification of activity change, reflective of change in disease state and of response to therapy.

[**0160**] A spike analyzer **87** receives as input the parameters from spike characterizer **86**. Spike analyzer **87** extracts higher level information, including but not limited to average spike frequencies, average interspike intervals, average amplitudes, standard deviations thereof, trends, and temporal patterning. By comparing current spike frequency rates to historical spike frequency data, spike analyzer **87** additionally calculates the rates of change of spike parameters. Prior trends and current rates of change may then be used to predict future behaviors. Rates of change of the parameters include but are not limited to autocorrelation and digital filtering.

[**0161**] Spike analyzer **87** may receive additional input from accelerometers, inrcluding but not limited to at least one of head mounted accelerometer **12**, proximal accelerometer **28**, enclosure mounted accelerometer **36**, and distal accelerometer **33**. Spike analyzer **87** may receive indirect input from accelerometers, such as from conditioned or processed signals arising therefrom. This may include, for example, the signal transmitted by conditioned accelerometer signal path **80**.

[**0162**] Spike analyzer **87** may also receive additional input from EMG arrays **50**, such as a proximal EMG electrode array **45**, enclosure-mounted EMG electrode array **46**, or distal EMG electrode array **47**. Spike analyzer **87** may receive indirect input from such EMG electrode arrays **50**, such as from conditioned or processed signals arising therefrom, including but not limited to the signal transmitted by conditioned EMG signal path **78**.

[**0163**] These additional inputs from accelerometers and EMG arrays facilitates the characterization of neuronal firing patterns relative to activity of muscle groups and movement of joints, including but not limited to characterization of neuronal spike amplitudes and tuning of firing to movement, including but not limited to movement velocity and direction. The characterization may be used to assess functioning of the sensorimotor system, including but not limited to motor response time, and to measure the disease state and response to therapy.

[**0164**] Intracranial recording electrode (ICRE) single unit-based (SU) disease state estimator **88** receives input from spike characterizer **86** and/or spike analyzer **87**. Spike analyzer **87** provides higher level information, including but not limited to average spike frequencies, average interspike intervals, average amplitudes, standard deviations thereof, trends, and temporal patterning to disease state estimator **88** . These inputs are representative of the current neuronal activity in the tissue from which the intracranial recording electrodes (ICRE) are recording. ICRE SU disease state estimator **88** may also receive input representative of one or more signals, including desired neuronal activity, from control circuit **72**. The ICRE SU disease state estimate X_{ICRE_SU} calculated by ICRE SU disease state estimator **88**, may be comprised of a single or a plurality of signals, consistent with a representation of the disease state by a single or a multitude of state variables, respectively. The ICRE MU disease state estimate X_{ICRE_MU} calculated by ICRE MU disease state estimator **88**, may be comprised of a single or a plurality of signals, each representative of multiunit neurophysiological signals, i.e. reflective of concurrent activity of numerous neurons. Both ICRE SU disease state estimate X_{ICRE_SU} and ICRE MU disease state estimate X_{ICRE_MU} are output to aggregate disease state estimator **195**.

[**0165**] Referring to **FIG. 3**, conditioned intracranial recording electrode (ICRE) signal path **83** additionally connects to filter **101**. Filter **101** is preferably of the bandpass type filter. In one embodiment, the bandpass filter **101** has a passband of 0.1 to 100 Hz, although other ranges may be used. Output of filter **101** connects to spectral energy characterizer **102**, which may be implemented in any of several hardware or software forms. For example, in one embodiment, the spectral energy characterizer **102** is implemented using real-time fast Fourier transform (FFT) techniques. Alternatively, other digital or analog techniques may also be used.

[**0166**] It should be understood that inputs and outputs from spike detector **85**, spike characterizer **86**, spike analyzer **87**, disease state estimator **88**, filter **101**, spectral energy characterizer **102**, spectral energy analyzer **103**, and disease state estimator **104** may be comprised of individual signals or a plurality of signals. Further, spike detector **85**, spike characterizer **86**, spike analyzer **87**, disease state estimator **88**, filter **101**, spectral energy characterizer **102**, spectral energy analyzer **103**, and disease state estimator **104** may each have different parameters and signal processing characteristics for each of the multiple signals processed. Because baseline neuronal firing rates differ among various anatomical and functional regions of the brain, and their involvement in disease states and susceptibility to change in firing patterns varies, the respective signal processing circuitry and logic will vary correspondingly. For example, baseline firing rates among neurons in the globus pallidus externus are approximately 43 Hz and those in the globus pallidus internus are 59 Hz..

[**0167**] The input to intracranial stimulating electrode ICSE signal processor **239**, referred to above as conditioned intracranial stimulating electrode (ICSE) signal path **84**, connects to spike detector **89**. Spike detector **89** identifies action potentials in a manner similar to that described above with reference to spike detector **85**. Intracranial stimulating electrode ICSE signal processor **239** performs a similar set of functions as intracranial recording electrode ICRE signal processor **238** on a different set of sensory feedback signals. As noted above, spike detection techniques are well known to those skilled in the art.

[**0168**] Spike detector **89** passes waveforms to spike characterizer **90**, which uses well known techniques to calculate parameters than characterize the behavior of the individual and groups of neurons, the activity of which is sensed by intracranial stimulating electrode array **37**. As noted above with respect to spike characterizer **86**, this characterization may include parameterization of spikes, bursts of spikes, and overall neural activity patterns. Similarly, the parameterization may include calculation of spike frequencies, burst frequencies, inter-spike intervals, amplitudes, peak-to-valley times, valley-to-peak times, spectral composition, positive phase amplitudes, negative phase amplitudes, and posi-

tive-negative phase differential amplitudes. Such characterization of neural spikes is known to those skilled in the art of neurophysiology. Based on this parameterization, spike characterizer **90** discriminates individual spikes and bursts originating from different neurons. As noted, such discrimination facilitates serial monitoring of activity of individual and groups of neurons and the assessment and quantification of activity change, reflective of change in disease state and of response to therapy.

[**0169**] Spike analyzer **91** receives the parameters from spike characterizer **90**, and extracts higher level information, including average spike frequencies, average interspike intervals, average amplitudes, standard deviations thereof, trends, and temporal patterning. The function and operation of spike analyzer **91** is similar to that described herein with reference to spike analyzer **87**. Similarly, spike analyzer **91** may receive additional input directly or indirectly from accelerometers and/or EMG arrays to facilitate the characterization of neuronal firing patterns relative to activity of muscle groups and movement of joints. This may include, for example, characterization of neuronal spike amplitudes and tuning of firing to movement, including but not limited to movement velocity and direction. Such characterization may be used to asses functioning of the sensorimotor system, including but not limited to motor response time, and to measure the disease state and response to therapy.

[**0170**] Intracranial stimulating electrode (ICSE) single unit-based (SU) disease state estimator **92** receives input from either or both spike characterizer **90** and spike analyzer **91**. ICSE SU disease state estimator **92** receives input representative of the current neuronal activity from spike characterizer **90**. ICSE SU disease state estimator **92** may receive input representative of at least one of several signals, including desired neuronal activity, actual neuronal activity, and the difference between these quantities. The ICSE SU disease state estimate, calculated by ICSE SU disease state estimator **92**, may be comprised of a single or a plurality of signals, consistent with a representation of the disease state by a single or a multitude of state variables, respectively.

[**0171**] As with intracranial recording electrode signal processor **238**, inputs and outputs from spike detector **89**, spike characterizer **90**, spike analyzer **91**, disease state estimator **92**, filter **106**, spectral energy characterizer **107**, spectral energy analyzer **108**, and disease state estimator **109** may include individual or a plurality of signals, and each may have different parameters and signal processing characteristics for each of the multiple signals processed. Because baseline neuronal firing rates differ among various anatomical and functional regions of the brain, and their involvement in disease states and susceptibility to change in firing patters varies, the respective signal processing circuitry and logic varies correspondingly.

[**0172**] **FIG. 4** is a schematic diagram of a globus pallidus **119** implanted with stimulating and recording electrodes. Intracranial catheter **7** is shown in place with electrode of the intracranial stimulating electrode array **37** located within the globus pallidus internus (Gpi) **120**, including globus pallidus internus internal segment (GPi,i) **94** and globus pallidus internus external segment (GPi,e) **95**, and globus pallidus externus (GPe) **96**.

[**0173**] Intracranial stimulating electrodes **1** and **2** are shown implanted in the globus pallidus internus internal segment (GPi,i) **94**; and intracranial stimulating electrodes **3** and **4** are shown implanted in the globus pallidus internus external segment (GPi,e) **95** and globus pallidus externus (GPe) **96**, respectively. It should be understood that this arrangement is illustrative of one preferred embodiment, and other stimulating and recording electrode configurations may be employed without departing from the present invention.

[**0174**] The optic tract **97** is shown in its close anatomical relationship to the globus pallidus internus (Gpi) **120**. The risk inherent in treatment modalities involving irreversible tissue ablation should be apparent; stereotactic errors of only one to several millimeters during lesioning of the globus pallidus internus (Gpi) **12***o* may result in irreversible damage or complete destruction of the optic tract **97**. Furthermore, the advantage of a system which dynamically adjusts the amplitude of inhibitory electrical stimulus to the globus pallidus **119** to dilinimize said amplitude offers the potential advantage of minimization of side effects including interference with visual signals of the optic tract **97** and prevention of overtreatment.

[**0175**] Intracranial stimulating electrodes **1**,**2**,**3**,**4** are shown implanted in the GPi,i **94**, GPi,e **95**, GPe **96**, respectively. This is one preferred embodiment. Numerous permutations of electrode stimulation site configuration may be employed, including more or fewer electrodes in each of these said regions, without departing from the present invention. Electrodes may be implanted within or adjacent to other regions in addition to or instead of those listed above without departing from the present invention, said other reasons including but not limited to the ventral medial Vim thalamic nucleus, other portion of the thalamus, subthalamic nucleus (STN), caudate, putamen, other basal ganglia components, cingulate gyrus, other subcortical nuclei, nucleus locus ceruleus, pedunculopontine nuclei of the reticular formation, red nucleus, substantia nigra, other brainstem structure, cerebellum, internal capsule, external capsule, corticospinal tract, pyramidal tract, ansa lenticularis, white matter tracts, motor cortex, premotor cortex, supplementary motor cortex, other motor cortical regions, somatosensory cortex, other sensory cortical regions, Broca's area, Wernickie's area, other cortical regions, other central nervous system structure, other peripheral nervous system structure, other neural structure, sensory organs, muscle tissue, or other non-neural structure.

[**0176**] Referring to **FIGS. 3 and 4**, a small percentage of cells in the globus pallidus internus internal segment **94** and globus pallidus internus external segment **95** exhibit tremor-synchronous discharges. As noted, at least one of single unit recordings from individual cells and multiple unit recordings from a plurality of cells are processed by signal processor **71**. The single and multiple unit recordings may be derived from signals arising from intracranial stimulating electrode array **37**, intracranial recording electrode array **38**, or other sources. The output from signal processor **71** is connected to control circuit **72** and the output may represent at least one of disease state, magnitude of symptomatology, response to therapy, other parameter, and combination thereof.

[**0177**] Individual electrodes comprising intracranial stimulating electrode array **37** and intracranial recording electrode array **38** may each be of the microelectrode type for single unit recordings, macroelectrode type for multiple

unit recordings, other electrode type, or a combination thereof, without departing from the spirit of the present invention. In one preferred embodiment, intracranial stimulating electrode array **37** consists of macroelectrodes. The macroelectrodes facilitate delivery of stimulation current at a lower charge density (coulombs per unit of electrode surface area) than microelectrodes of the same chemistry and surface treatment. The dimensions of intracranial stimulating electrodes **1-4** are selected such that the current density, or electrical current divided by electrode surface area, is below the threshold of reversible charge injection for the given electrode material.

[**0178**] Standard single cell recording technique, using an electrode with an impedance of typically 1-2 Megohms, involves bandpass filtering with −6 decibel (dB) points at 300 and 10,000 Hertz. This filtering, or a modification thereof, may be accomplished by ICRE filter **65** and ICSE filter **64**; alternatively, it may be performed in spike detector **85** and spike detector **89**, respectively, or other portion of stimulating and recording circuit **26**.

[**0179**] **FIG. 5** is a block diagram of one embodiment of an EMG signal processor **233** which is included in a preferred embodiment of signal processor **71**. EMG signal processor **233** processes signals from EMG electrode array **50**, performing functions including but not limited to full wave rectification, envelope determination, bandpass filtering, threshold discrimination, and others described in more detail below, to produce signals indicative of the overall magnitude of tremor as well as the frequency at which tremor episodes occur. As noted, EMG electrode array **50** includes, but is not limited to, proximal EMG electrode array **45**, enclosure-mounted EMG electrode array **46**, and distal EMG electrode array **47**. EMG electrodes may be located in any implanted or external location without departing from the present invention. For example, electrodes may be located within or in proximity to the hand, forearm, arm foot, calf, leg, abdomen, torso, neck, head, haw, lip, eyelid, larynx, vocal cords, and tongue.

[**0180**] Conditioned EMG signal path **78** is also connected to a well-known full wave rectifier **123** now or later developed. Output from the full wave rectifier **123** is coupled to an input of an envelope determiner **124**. Determination of the envelope of a modulated signal is well known to those skilled in the art of electronics; this may be readily implemented in analog or digital hardware or in software. Output of envelope determiner **124** is connected to inputs of filters **125**, **127**, **129**, **131** and **133**. In one embodiment, filters **125**,**127**, **129**, **131**, **133** implement passbands of approximately 0.1-2 Hz, 2-3 Hz, 3-5 Hz, 7-8 Hz, and 8-13 Hz, respectively. Outputs of filters **125**, **127**, **129**, **131** and **133** are connected to threshold discriminators **126**, **128**, **130**, **132**, **134**, respectively.

[**0181**] Threshold discriminators **126**, **128**, **130**, **132**, and **134** generate outputs representing episodes of normal voluntary movement (Mv), low frequency intention tremor (Til) resting tremor (Tr), high frequency intention tremor (Tih), and physiologic tremor (Tp), respectively. These outputs are each connected to both of integrator **135** and counter **136**. Integrator **135** generates outputs representative of the total activity of each of the above types of movement over at least one period of time. One such time period may be, for example, time since implantation, time since last visit to physician or health care provider, month internal, week interval, day interval, interval since last medication dose, interval since last change in stimulation parameters, weighted average of multiple time windows, and convolution of said activity with arbitrary time window function.

[**0182**] Counter **136** generates outputs representative of the number of episodes of each of the above types of movement over at least one period of time. Such period of time may be, for example, time since implantation, time since last visit to physician or health care provider, month interval, week internal, day interval, interval since last medication dose, interval since last change in stimulation parameters, and weighted average of said number of episodes over multiple time windows. Outputs from integrator **135** and counter **136** are connect to EMG analyzer **137**. EMG analyzer **137** performs a number of functions including, for example, calculation of proportions of tremor activity which are of the rest and the intention type, ratios of different types of tremor activity, the level of suppression of resting tremor activity with voluntary movement, assessment of temporal patterns of EMG activity. EMG disease state estimator **138** receives inputs from EMG analyzer **137** and generates output representative of disease state based upon said input. In one preferred embodiment, two disease states are calculated, including a signal representative of the overall magnitude of tremor activity and a signal representative of the frequency of occurrence of tremor events. It should be understood that all signals paths may transmit one or more signals without departing from the present invention.

[**0183**] EMG signals may be sensed from any individual or group of muscles and processed in a manner including but not limited to the determination of severity and frequency of occurrence of various tremor types. Normal or physiologic tremor includes movement in the 8-13 Hz range and may be used as a normalization for the other types of sensed tremor. The predominant pathological form of tremor exhibited in Parkinson's disease patients is the classical "resting" tremor which includes movements in the 3-5 Hz range which are present at rest and suppressed in the presence of voluntary movement. In the present invention, quantification of this tremor type serves as a heavily weighted sensory input in the assessment of disease state and response to therapy. Parkinson's disease patients may also exhibit intention tremor, of which there are two types. The first type of intention tremor is referred to as "low frequency intention tremor" (Til in the present invention) and consists of movements in the 2-3 Hz range. A second type of intention tremor is referred to as "high frequency intention tremor" Tih in the present invention and consists of irregular movements in the 7-8 Hz range which persist throughout voluntary movement. Other types of tremor having associated movement in other ranges may be sensed and represented by the EMG signals.

[**0184**] EMG signals from at least one of orbicularis oculi (effecting eye closure), levator palpebrae (effecting eye opening), and other muscles contributing to eyelid movement, may be sensed and processed to determine frequency of eye blinking. Patients with Parkinson's disease exhibit a reduction in eyeblinking frequency from the normal of 20 per minute to 5 to 10 per minute, and this parameter is sensed as a measure of disease severity and response to treatment. Additionally, said EMG signals may be sensed and processed for detection and quantification of blepharoclonus, or rhythmic fluttering of the eyelids, and used as a

measure of disease state and response to therapy. EMG signals, including baseline levels thereof, may be used to quantify rigidity and hypertonus as measures of disease state and response to therapy. Discharge patterns of individual motor units, including but not limited to synchronization of multiple units and distribution of intervals preceding and following discharge, may be used as measures of disease state and response to therapy.

[0185] **FIG. 6** is a block diagram of one embodiment of an EEG signal processor module **234** which is included in embodiments of signal processor **71**. The EEG signal processor module **234** processes signals from EEG electrode array **51**. Conditioned EEG signal path **79** connects to an input of artifact rejecter **139** which rejects signals with amplitudes above a threshold. In one embodiment, this threshold is 0.1 mV. An output from artifact rejecter **139** connects to an input of each of supplementary motor area signal extractor **140** and filters **143**, **146**, **149**, **152**, **219**. Filters **143**, **146**, **149**, **152**, and **219** are preferably of the bandpass type with passbands of 13-30 Hz, 8-13 Hz, 4-7 Hz, 0.1-4 Hz, and 0.1-0.3 Hz, respectively. Each filter output is connected to an input of an associated full wave rectifier **141**, **144**, **147**, **150**, **153**, **220**. Each full wave rectifier **141**, **144**, **147**, **150**, **153**, **220** is connected to an input of an associated envelope determiner **142**, **145**, **148**, **151**, **154**, and **221**, respectively. The envelope determiners generate a signal representative of the envelope of the input signal, typically performed by lowpass filtering with a time constant of 5 seconds. Finally, outputs of envelope determiners **142**, **145**, **148**, **151**, **154**, and **221** are connected to EEG disease state estimator **155**.

[0186] Signal SMA generated by supplementary motor area signal extractor **140** represents activity in the supplementary motor area ipsilateral to the intracranial stimulating electrode array (ISEA) **37**. Supplementary motor area signal extractor **140** amplifies signals which are unique to elements of the EEG electrode array **51** which overlie the supplementary motor area. The supplementary motor area receives neural signals via neural projections from the basal ganglia and exhibits decreased activity in patients with Parkinson disease. The SMA is essential for sequential movements, which are often impaired in Parkinson's disease patients. The SMA signal provides a quantitative measure of disease state and response to therapy. The SMA signal is extracted from the anterior EEG leads, predominantly from those in the vicinity of the frontal cortex, and provides a quantitative measure of disease state and response to therapy. Signals beta, alpha, theta, and delta consist of 13-30 Hz, 8-13 Hz, 4-7 Hz, and 0.1-4 Hz activity, respectively.

[0187] Signal "resp" consists of 0.1-0.3 Hz activity and reflects respiration. Parkinson's disease patients exhibit irregular respiratory patterns characterized by pauses and by abnormally deep breathing while at rest and preceding speech. Assessment of respiratory irregularity as well as other parameters derived from such resp signal serve as quantitative measures of disease state and response to therapy.

[0188] Anterior EEG electrodes are also used to sense EMG signals, and the EMG signals are processed to determine activity of muscles including but not limited to those related to eye blinking activity. Processing of the EMG signals is included in the **FIG. 6** circuit block diagram which contains the EEG signal processing component of signal processor **71**. However, the processing could be incorporated into EMG signal processing component of signal processor **71** without departing from scope of the present invention. Conditioned EEG signal path **79** is additionally connected to input of full wave rectifier **222**, the output of which is connected to the input of an envelope determiner **223**. Envelope determiner **223** includes an output connected to input of filter **224**. Filter **224** is preferably of the bandpass type with a passband range of 0.1 to 20 Hz. Filter **224** has an output connected to input of threshold discriminator **225**, the output of which is connected to EEG disease state estimator **155**.

[0189] Preferably, EMG signals arising from activity of at least one of orbicularis oculi (effecting eye closure), levator palpebrae (effecting eye opening), and other muscles the activity of which is associated with eyelid movement are sensed by anterior EEG electrodes. These EMG signals are processed to determine eye blink events, and the rates and regularity of eye blinking activity are calculated. Frequency and irregularity of eyeblinking as well as blepharoclonus, or rhythmic fluttering of the eyelids, are quantified as measures of disease state and response to therapy.

[0190] **FIG. 7** is a block diagram of one embodiment of an accelerometer signal processor **235** which is incorporated into certain embodiments of signal processor **71**. The accelerometer signal processor **235** processes signals from accelerometer array **52**. Conditioned accelerometer signal path **80** is connected to an input of each of a plurality of filters **156**, **160**, **164**, **168**, **172**. The filters are preferably of the bandpass type with passbands of 0.1-2 Hz, 2-3 Hz, 3-5 Hz, 7-8 Hz, and 8-13 Hz, respectively. Other passband frequency ranges may also be used. The output of each filter **156**, **160**, **164**, **168**, **172** is connected to an associated full wave rectifiers **157**, **161**, **165**, **169**, and **173**, respectively. The output of each rectifier **157**, **161**, **165**, **169**, and **173** is connected to an associated envelope determiners **158**, **162**, **166**, **170**, and **174**, respectively. Outputs of envelope determiners **158**, **162**, **166**, **170**, and **174** are connected to inputs of an associated threshold discriminators **159**, **163**, **167**, **171**, and **175**, respectively.

[0191] Outputs of threshold discriminators **159**, **163**, **167**, **171**, **175** represent episodes of normal voluntary movement (Mv), low frequency intention tremor (Til), resting tremor (Tr), high frequency intention tremor (Tih), and physiologic tremor (Tp), respectively. These outputs are each connected to an integrator **176** and a counter **177**. Integrator **176** generates outputs representative of the total activity of each of the above types of movement over at least one period of time. As noted, such a time period may be, for example, time since implementation, time since last visit to physician or health care provider, or some other time interval, weighted average of multiple time windows, or convolution of selected activities with an arbitrary time window function.

[0192] Counter **177** generates outputs representative of the number of episodes of each of the above types of movements over at least one such period of time. Outputs from integrator **176** and counter **177** are connect to an acceleration analyzer **178**. Acceleration analyzer **178** calculates proportions of tremor types, such as the rest and intention types, ratios of different types of tremor activity, the level of suppression of resting tremor activity with voluntary move-

ment, and assessment of temporal patterns of movement and acceleration. Acceleration analyzer **178** may perform some or all of these calculations, as well as other calculations, on alternative embodiments of the present invention. Acceleration-based disease state estimator **179** receives input from acceleration analyzer **178** and generates output representative of disease state based upon such input.

[**0193**] It should be understood that accelerometer signals may be sensed from any individual or group of body components. For example, such signals may be sensed from joints, bones, and muscles. Furthermore, such signals may be processed in any well known manner, including the determination of severity and frequency of occurrence of various tremor types. The types of tremor have been described above with respect to **FIG. 5**.

[**0194**] **FIG. 8** is a block diagram of one embodiment of an acoustic signal processor **236** which is included in certain embodiments of signal processor **71**. Acoustic signal processor **236** processes signals from acoustic transducer array **53**. Conditioned acoustic signal path **81** is connected to a full wave rectifier **180** and a spectral analyzer **185**. The output of full wave rectifier **180** is connected to an input of an envelope determiner **181**, an output of which is connected to an input of a low threshold discriminator **182** and a high threshold discriminator **183**. Low threshold discriminator **182** and high threshold discriminator **183** each have an output connected to an input of timer **184**. Timer **184** generates an output signal representing latency (Lat) and is connected to acoustic analyzer **186**. An output of acoustic analyzer **186** is connected to an input of acoustic-based disease state estimator **187**. Latency (Lat) represents the latency between initiation of vocal utterance and the subsequent achievement of a threshold level of vocal amplitude. Such a vocal amplitude level is set by high threshold discriminator **183** and may represent steady state vocal amplitude or a preset or dynamically varying threshold. Latency from voice onset to achievement of steady state volume may be delayed in patients with Parkinson's disease and is calculated as a measure of disease state and response to therapy.

[**0195**] Acoustic analyzer **186** receives input from spectral analyzer **185**. The respiratory pattern is determined from rhythmic modulation of voice and breathing sounds, sensed by elements of the acoustic transducer array **53**. Irregularity and pauses in respiration as well as abnormally deep breathing patterns at rest and preceding speech are exhibited in Parkinson's disease patients. Such parameters are quantified and used as estimates of disease state and response to therapy. Respiration durations are quantified; abnormally deep respiration both during rest and preceding speech are identified and used as indicators of disease state and response to therapy. Pauses in speech and decline in speech amplitude, or fading, are additionally monitored as indicators of disease state and response to therapy. Spectral composition of speech is monitored and the change in spectral composition, reflective of changes of pharyngeal and laryngeal geometry, are quantified. Additionally, the fundamental vocal frequency; that is, the frequency at which the epiglottis vibrates, is extracted an that standard deviation of the fundamental vocal frequency is calculated over various time intervals as a quantified measure of the monotonic quality of speech characteristic of Parkinson's disease. This serves as yet another indicator of disease state and response to therapy.

[**0196**] **FIG. 9** is block diagram of one embodiment of a peripheral nerve electrode (PNE) signal processor **237** which is implemented in certain embodiments of signal processor **71**. PNE signal processor **237** processes signals from peripheral nerve electrode array **54**. These signals provided by peripheral nerve electrode array **54** are provided to PNE signal processor **237** via conditioned PNE signal path **82**. Conditioned PNE signal path **82** is connected to an input of a spike detector **188** and a filter **191**.

[**0197**] Spike detector **188** identifies action potentials. As noted, spike detection techniques are well known to those skilled in the art, and generally employ low and high amplitude thresholds. Waveforms with amplitudes greater than the low threshold and lower than the high threshold are determined to be action potentials. These thresholds may be adjusted in real-time, and the low amplitude threshold is set above the amplitude of background noise and that of nearby cells not of interest, and the high amplitude threshold is set above the amplitude of the desired action potentials to allow their passage while eliminating higher amplitude noise spikes, such as artifacts arising from electrical stimulation currents. It should be understood that bandpass, notch, and other filtering techniques may also used to improve signal to noise ratio and the sensitivity and specific of spike detectors. Individual neuron action potentials are usually recorded using fine point high-impedance electrodes, with impedances typically ranging from 1 to 5 megohms. Alternatively, larger lower-impedance electrodes may be used for recording, in which case the signals obtained typically represent aggregate activity of populations of neurons rather than action potentials from individual neurons. As noted above, peripheral nerve electrode array **54** may include such electrodes as single unit recording microelectrodes, multiple unit recording microelectrodes, intrafascicular electrodes, other intraneural electrodes, epineural electrodes, and any combination thereof.

[**0198**] A spike characterizer **189** determines firing patterns of individual neurons, including, for example, tonic activity, episodic activity and burst firing. Spike characterizer **189** receives the signals passed by spike detector **188** and calculates parameters that characterize the behavior of the individual and groups of neurons, the activity of which is sensed by peripheral nerve electrode array **54**. Such characterization includes but is not limited to parameterization of spikes, bursts of spikes, and overall neural activity patterns. Parameterization includes but is not limited to calculation of frequencies of spikes, frequencies of bursts of spikes, inter-spike intervals, spike amplitudes, peak-to-valley times, valley-to-peak times, spectral composition, positive phase amplitudes, negative phase amplitudes, and positive-negative phase differential amplitudes. These parameters are described in further detail below with reference to **FIG. 14**. Based on this parameterization, spike characterizer **189** discriminates individual spikes and bursts originating from different neurons. The discrimination facilitates aerial monitoring of activity of individual and groups of neurons and the assessment and quantification of activity change, reflective of change in disease state and of response to therapy.

[0199] A spike analyzer **190** receives as input the parameters from spike characterizer **189**, and extracts higher level information, including but not limited to average spike frequencies , average frequencies o bursts of spikes, average interspike intervals, average spike amplitudes, standard deviations thereof, trends, and temporal patterning.

[0200] Preferably, spike analyzer **190** additionally calculates the rates of change of spike parameters. From prior and current rates of change, future behaviors may be predicted. Rates of change of the parameters include but are not limited to first, second, and third time derivatives. In alternative embodiments, spike analyzer **190** additionally calculates weighted combinations of spike characteristics and performs convolutions of spike waveforms with other spike waveforms, and other preset and varying waveforms. Such operations may be performed, for example, for purposes including but not limited to autocorrelation and digital filtering.

[0201] Spike analyzer **190** may receive additional input from accelerometers, such as those described above, including head mounted accelerometer **12**, proximal accelerometer **28**, enclosure mounted accelerometer **36**, and distal accelerometer **33**. Spike analyzer **190** may receive indirect input from these or other accelerometers, as well as from conditioned or processed signals arising therefrom. Such conditioned or processed signals include, for example, the signal transmitted by conditioned accelerometer signal path **80** (**FIG. 7**).

[0202] Spike analyzer **190** may receive additional input from EMG arrays. As noted, such EMG arrays may include, for example, proximal EMG electrode array **45**, enclosure-mounted EMG electrode array **46**, and distal EMG electrode array **47**. Spike analyzer **190** may also receive indirect input from these or other EMG electrode arrays, as well as from conditioned or processed signals arising therefrom. Such conditioned or processed signals include but are not limited to the signal transmitted by conditioned EMG signal path **78** (**FIG. 5**). These additional inputs from accelerometers and EMG arrays facilitates the characterization of neuronal firing patterns relative to activity of muscle groups and movement of joints. Such characterization may include, for example, characterization of neuronal spike amplitudes and tuning of neuronal spike frequencies to movement, including but not limited to the signal transmitted by conditioned EMG signal path **78**.

[0203] The additional input from accelerometers and EMG arrays also facilitates the characterization of neuronal firing patterns relative to activity of muscle groups and movement of joints, including but not limited to characterization of neuronal spike amplitudes and tuning of neuronal spike frequencies to movement, including but not limited to movement velocity and direction. These characterizations may be used to assess functioning of the sensorimotor system, including but not limited to motor response time, and to measure the disease state and response to therapy.

[0204] Peripheral nerve electrode (PNE)-based single unit (SU) disease state estimator **194** receives an input representative of the current neuronal activity from spike characterizer **189**. PNE-based single unit disease state estimator **194** may receive input representative of at least one of several signals, including desired neuronal activity, actual neuronal activity, and the difference between these quantities. The output from estimator **194** may carry a single or a plurality of signals, consistent with a representation of the disease state by a single or a multitude of state variables, respectively.

[0205] Filter **191** has an output connected to an input of spectral energy characterizer **192**. Spectral energy characterizer **192** calculates the spectral composition of the signals sensed by the peripheral nerve electrode array **54**. Spectral energy characterizer **192** provides outputs to each of spectral energy analyzer **193** and peripheral nerve electrode (PNE)-based multiple unit disease state estimator **232**. Output of spectral energy analyzer **193** is connected to an input of PNE-based multiple unit (MU) disease state estimator **232**. PNE SU disease state estimator **194** both receives input from and provides output to PNE MU disease state estimator **232**.

[0206] PNE MU disease state estimator **232** receives as an input signals representative of the current neuronal activity from spectral energy characterizer **192**. PNE MU disease state estimator **232** may receive input representative of at least one of several signals, including desired neuronal activity, actual neuronal activity, and the difference between these quantities. The output from PNE MU disease state estimator **232** may carry a single or a plurality of signals, consistent with a representation of the disease state by a single or a multitude of state variables, respectively.

[0207] It should be understood that inputs and outputs from each spike detector **188**, spike characterizer **189**, spike analyzer **190**, filter **191**, spectral energy characterizer **192**, spectral energy analyzer **193**, and PNE-based single unit disease state estimator **194**, and PNE-based multiple unit disease state estimator **232** may each be comprised of individual signals or a plurality of signals. It should also be understood that each of these the units, spike detector **188**, spike characterizer **189**, spike analyzer **190**, filter **191**, spectral energy characterizer **192**, spectral energy analyzer **193**, and PNE-based single unit disease state estimator **194**, and PNE MU disease state estimator **232** may each have different parameters and signal processing characteristics for each of the multiple signals processed. Modifications of this processing circuitry may be made to accommodate various combinations of intraneural electrodes, used for single and multiple unit recordings, and epineural electrodes, used for compound action potential recordings, without departing from the present invention.

[0208] **FIG. 11** is a schematic diagram of one embodiment of a patient-neural modulator system **999** illustrated in **FIG. 2** with feedback control. Patient-neural modulator system **999** primarily includes an observer **228** and a controller **229**. An observer is a component of a control system that is known to those or ordinary skill in the art of control systems. An observer is a functional block in which variables, typically represented in software as parameter values or in hardware as electrical signal amplitudes, represent states of the controlled system. Such a component is used in controlling systems in which one or more of the state variables are not directly observable from the sensed signals. An observer essentially includes a simulated version of the controlled system. Its input are the same control law output signals delivered to the controlled system, and its outputs are desired to match those sensed outputs of the controlled system. The difference between the outputs of the observer and the measured outputs of the controlled system, that is, the routputs of a motor control portion of the patient's

nervous system in this case, are used to calculate an observer error signal which may then be used to correct the observer error. Since the observer is implemented in software or hardware, all of its signals, including all state variables, are accessible. In a system such as the complex neural circuitry of the patient, one or more of the state variables may not be "observable", that is directly measurable or calculatable based on measured values. In such a case, the state variables present in the observer may be used as "estimates" of the actual state variables and included in the control law. The general use of "observers" for estimation of "unobservable" state variables is known to those skilled in the art of control theory. The use of observers for the estimation of neural state variables, disease states, and responses to therapy is one of the teachings of the present invention.

[**0209**] Observer **228** includes signal conditioning circuit **76** (**FIG. 2**) and signal processor **71** (**FIGS. 2, 10**). Signal processor **71**, as noted, includes disease state estimator module array (DSEMA) **229** and aggregate disease state estimator **195**. Observer **228** receives patient output "y" from patient **227**. Patient output "y" is comprised of one or more signals arising from patient **227**. In one preferred embodiment patient output "y" includes one or more signals from EMG electrode array **50**, EEG electrode array **51**, accelerometer array **52**, acoustic transducer array **53**, peripheral nerve electrode array **54**, intracranial recording electrode array **38**, and intracranial stimulating electrode array **37**. It should be understood that additional signals f the same or different type may also be included.

[**0210**] Control circuit **72** (**FIG. 2**) includes summator **226** which receives an input from reference module **116**, and a control law circuit block **231**. Controller **229** includes the control law circuit lock **231** and output stage circuit **77**. Controller **229** generates a neural modulation waveforms "u", described in detail below with reference to **FIG. 13**. The function and operation of each of these modules is described in detail below.

[**0211**] Reference disease state "r", generated by reference module **116**, is a non-inverting input to summator **226**, providing disease state and target reference values for the single or plurality of control laws implemented in control law circuit block **231** introduced above with reference to **FIG. 2**. Reference module **116** may also receive input from control circuit **72**, facilitating the dynamic adjustment of reference values. Reference disease state "r" may comprise a single or plurality of signals, each of which may be zero, constant, or time-varying independent of the other. Disease state error "e" is output from summator **226** and input to controller **229**. Disease state error "e", which may comprise a single or plurality of signals, represents a difference between a desired disease state (represented by reference disease state "r") and an actual disease state (represented by disease state estimate "x"). Other methods of calculating disease state estimate "x", including but not limited to linear or nonlinear combinations of reference disease state "r" and disease state estimate "x", may be employed without departing from the present invention. Controller **229** is comprised of control law circuit block **231** and output stage circuit **77**.

[**0212**] Disease state error "e" is input to control law circuit block **231** which generates a control circuit output "uc." Control law circuit block **231** is connected to an input of output stage circuit **77**. The output of the controller **229**, which is generated by the output stage circuit **77**, "u", is delivered to patient **227** in the form of neural modulation waveforms, described in detail below with reference to **FIG. 13**.

[**0213**] Patient output by" is input to signal conditioning circuit **76**, the output of which is connected to the input of DSEMA **229**. The output of DSEMA **229** is provided to an aggregate disease state estimator **195**, the output of which is the disease state estimate x. Disease state estimate x, which may be comprised of a single or plurality of signals, is an inverting input to summator **226**.

[**0214**] Control law circuit block **231** receives disease state estimate x as an additional input, for use in nonlinear, adaptive and other control laws. Reference module **116** receives input from DSEMA **229** and aggregate disease state estimator **195** for use in dynamically determining reference disease state r. Other modifications, including substitutions, additions, and deletions, may be made to the control loop without departing from the present invention.

[**0215**] Control law circuit block **231** has an autocalibration mode in which multivariable sweeps through stimulation parameters and stimulating electrode configurations are performed to automate and expedite parameter and configuration optimization. This autocalibration feature enables rapid optimization of treatment, eliminating months of iterations of trial and error in optimizing stimulation parameters and electrode configuration necessitated by the prior technique of constant parameter stimulation. Additionally, this autocalibration feature permits real-time adjustment and optimization of stimulation parameters and electrode configuration. This is particularly useful to overcome increases in electrode impedance which result from the body's normal response to implanted foreign bodies in which a fibrotic capsule is commonly formed around the electrodes. Effects of shifts in electrode position relative to a target structures may be minimized by said autocalibration feature. Detection of changes in electrode impedance and position are facilitated by autocalibration feature. The autocalibration feature facilitates detection of changes in electrode impedance and position. Notification of patient and health care provider allows proactive action, including automated or manual adjustment of treatment parameters and advance knowledge of impending electrode replacement needs.

[**0216**] **FIG. 12** is a schematic diagram of control circuit **72**. As noted, control circuit **72** comprises control laws circuit block **231** and summator **226**. Disease state error "e" is input to gain stages of control laws, including but not limited to at least one of proportional gain **197**, differential gain **198**, integral gain **199**, nonlinear gain **200**, adaptive gain **201**, sliding gain **202**, and model reference gain **203**.

[**0217**] An output of each of these gain stages is connected to what is referred to herein as control law stages. In the illustrative embodiment, control law stages includes proportional controller **230**, differential controller **204**, integral controller **205**, nonlinear controller **206**, adaptive controller **207**, sliding controller **208**, and model reference controller **209**, respectively.

[**0218**] Outputs of these control law stages are connected to weight stages, including proportional controller weight **210**, differential controller weight **211**, integral controller weight **212**, nonlinear controller weight **213**, adaptive con-

troller weight **214**, sliding controller weight **215**, and model reference controller weight **216**. Outputs of the weight stages are noninverting inputs to summator **217**, the output of which is control circuit output "uc". The weight stages may be any combination of at least one of constant, time varying, and nonlinear without departing from the present invention.

[**0219**] Disease state estimate x is input to nonlinear controller **206**, adaptive controller **207**, sliding controller **208**, and model reference controller **209**. The control laws depicted are representative of one possible implementation; numerous variations, including substitutions, additions, and deletions, may be made without departing from the present invention.

[**0220**] The present invention optimizes the efficiency of energy used in the treatment given to the patient by minimizing to a satisfactory level the stimulation intensity to provide the level of treatment magnitude necessary to control disease symptoms without extending additional energy delivering unnecessary overtreatment. In the definition of the control law, a command input or reference input (denoted as r in **FIGS. 11 and 12**) specifies the target disease state. In the preferred embodiment, r specifies the target amplitude of tremor. The control law generates an electrical stimulation magnitude just sufficient to reduce the patient's tremor to the target value. With this apparatus and method, the precise amount of electrical energy required is delivered, and overstimulation is avoided. In present stimulation systems, a constant level of stimulation is delivered, resulting in either of two undesirable scenarios when disease state and symptoms fluctuate: (1) undertreatment, i.e. tremor amplitude exceeds desirable level or (2) overtreatment or excess stimulation, in which more electrical energy is delivered than is actually needed. In the overtreatment case, battery life is unnecessarily reduced. The energy delivered to the tissue in the form of a stimulation signal represents a substantial portion of the energy consumed by the implanted device; minimization of this energy substantially extends battery life, with a consequent extension of time in between reoperations to replace expended batteries.

[**0221**] **FIG. 13** is a schematic diagram of electrical stimulation waveforms for neural modulation. The illustrated ideal stimulus waveform is a charge balanced biphasic current controlled electrical pulse train. Two cycles of this waveform are depicted, each of which is made of a smaller cathodic phase followed, after a short delay, by a larger anodic phase. In one preferred embodiment, a current controlled stimulus is delivered; and the "Stimulus Amplitude" represents stimulation current. A voltage controlled or other stimulus may be used without departing from the present invention. Similarly, other waveforms, including an anodic phase preceding a cathodic phase, a monophasic pulse, a triphasic pulse, or the waveform may be used without departing from the present invention.

[**0222**] The amplitude of the first phase, depicted here as cathodic, is given by pulse amplitude **1** PA**1**; the amplitude of the second phase, depicted here as anodic, is given by pulse amplitude **2** PA**2**. The durations of the first and second phases are pulse width **1** PW**1** and pulse width **1** PW**2**, respectively. Phase **1** and phase **2** are separated by a brief delay d. Waveforms repeat with a stimulation period T, defining the stimulation frequency as f=1/T.

[**0223**] The area under the curve for each phase represents the charge Q transferred, and in the preferred embodiment, these quantities are equal and opposite for the cathodic (Q**1**) and anodic (Q**2**) pulses, i.e. Q=Q**1**=Q**2**. For rectangular pulses, the charge transferred per pulse is given by Q**1**=PA**1***PW**1** and Q**2**=PA**2***PW**2**. The charge balancing constraint given by −Q**1**=Q**2** imposes the relation PA**1***PW**1**=−PA**2***PW**2**. Departure from the charge balancing constraint, as is desired for optimal function of certain electrode materials, in included in the present invention.

[**0224**] The stimulus amplitudes PA**1** and PA**2**, durations PW**1** and PW**2**, frequency f, or a combination thereof may be varied to modulate the intensity of the said stimulus. A series of stimulus waveforms may be delivered as a burst, in which case the number of stimuli per burst, the frequency of waveforms within the said burst, the frequency at which the bursts are repeated, or a combination thereof may additionally be varied to modulate the stimulus intensity.

[**0225**] Typical values for stimulation parameters include f=100-300 Hz, PA**1** and PA**2** range from 10 microamps to 10 milliamps, PW**1** and PW**2** range from 50 microseconds to 100 milliseconds. These values are representative, and departure from these ranges is included in the apparatus and method of the present invention.

[**0226**] **FIG. 14** is a schematic diagram of one example of the recorded waveforms. This represents an individual action potential from a single cell recording, typically recorded from intracranial microelectrodes. Aggregates of multiple such waveforms are recorded from larger intracranial electrodes. The action potentials may be characterized according t a set of parameters including but not limited to time to valley **1** TV**1**, time to peak **1** TP**1**, time to valley **2** TV**2**, amplitude of valley **1** AV**1**, amplitude of peak **1** AP**1**, amplitude of valley **2** AV**2**, and algebraic combinations and polarity reversals thereof.

[**0227**] When recording activity from more than one cell, said characterization facilitates discrimination of waveforms by individual recorded cell. The discrimination allows activity of a plurality of cells to be individually followed over time. The parameterization may be performed separately on signals recorded from different electrodes. Alternatively, said parameterization may be performed on signals pooled from multiple electrodes.

[**0228**] Following is a description of a general form for representing disease state.

[**0229**] Disease State DS is a vector of individual disease states, including intrinsic disease states DSI and extrinsic disease states DSE:

$$DS=[DS_I DSE]$$

[**0230**] Intrinsic disease states and extrinsic disease states are, themselves vectors of individual disease states:

$$DS_I=[DS_{I1}DS_{I2}DS_{I3} \ldots DS_{IN}]$$

$$DS_E=[DS_{E1}DS_{E2}DS_{E3} \ldots DS_{EM}]$$

[**0231**] Intrinsic Disease States include those disease states which characterize the state of disease at a given point in time. Extrinsic Disease States include variations of intrinsic disease states, including but not limited to cyclical variations in Intrinsic Disease States, variations in Intrinsic Disease States which occur in response to external events, and variations in Intrinsic Disease States which occur in

response to levels of and changes in levels of electrical stimulation. Said external events include but are not limited to pharmacologic dosing, consumption of meals, awakening, falling asleep, transitioning from Parkinsonian "on" state to Parkinsonian "off" state, transitioning from Parkinsonian "off" state to Parkinsonian "on" state.

[0232] Each of Intrinsic Disease States and Extrinsic Disease States include but are not limited to those defined herein; additional disease states and definitions thereof may be added without departing from the present invention.

[0233] The first intrinsic disease state DS_{I1} represents the level of resting tremor

$$DS_{I1}=RT_N$$

[0234] Where Normalized Resting Tremor Magnitude RTN is given by:

$$RT_N=T_{A,3\text{-}5}*W_{TA,3\text{-}5}+T_{E,3\text{-}5}*W_{TE,3\text{-}5}+T_{P,3\text{-}5}*W_{PE,3\text{-}5}+T_{C,3\text{-}5}+W_{TC,3\text{-}5}+T_{N,3\text{-}5}*W_{TN,3\text{-}5}+T_{S,3\text{-}5}*W_{TS,3\text{-}5}+T_{E,3\text{-}5}*W_{TE,3\text{-}5}$$

[0235] Where the factors from which the Resting Tremor Magnitude RT_N is determined, representing estimates of the magnitude of 3-5 Hertz movement of selected body segments, including but not limited to limbs, torso, and head are:

[0236] $T_{A,3\text{-}5}$=Tremor level determined by acceleration monitoring

[0237] $W_{TA,3\text{-}5}$=Weighting factor for tremor $T_{A,3\text{-}5}$

[0238] $T_{E,3\text{-}5}$=Tremor level determined by electromyographic (EMG) monitoring

[0239] $W_{TE,3\text{-}5}$=Weighting factor for tremor $T_{E,3\text{-}5}$

[0240] $T_{P,3\text{-}5}$=Tremor level determined by peripheral nerve electrode monitoring

[0241] $W_{TP,3\text{-}5}$=Weighting factor for tremor $T_{P,3\text{-}5}$

[0242] $T_{C,3\text{-}5}$=Tremor level determined by cortical electrode monitoring

[0243] $W_{TC,3\text{-}5}$=Weighting factor for tremor $T_{C,3\text{-}5}$

[0244] $T_{N,3\text{-}5}$=Tremor level determined by neural monitoring, including subcortical nuclei, white matter tracts, and spinal cord neurons

[0245] $W_{TN,3\text{-}5}$=Weighting factor for tremor $T_{N,3\text{-}5}$

[0246] $T_{S,3\text{-}5}$=Tremor level determined by acoustic sensor monitoring

[0247] $W_{TS,3\text{-}5}$=Weighting factor for tremor $T_{S,3\text{-}5}$

[0248] Weighting factors are adjusted after implantation to achieve normalization of RT_N and to allow for selective weighting of tremor levels as determined from signals arising from various sensors, including but not limited to those listed.

[0249] These calculations may be implemented in analog hardware, digital hardware, software, or other form. In the preferred embodiment, values are implemented as 16-bit variables; ranges for said weighting factors and tremor levels are 0 to 65535. These ranges may be changed or implemented in analog form without departing from the present invention.

[0250] The second intrinsic disease state DS_{I2} represents the level of dyskinesia:

$$DS_{I2}=D_N$$

[0251] Where Normalized Dyskinesia Magnitude D_N is given by:

$$D_N=D_A*W_{DA}+T_E*W_{TE}+T_P*W_{PE}+T_C+W_{TC}+T_N*W_{TN}+T_S*W_{TS}+T_E*W_{TE}$$

[0252] Where

[0253] $D_{A,3\text{-}5}$=Dyskinesia level determined by acceleration monitoring

[0254] $W_{DA,3\text{-}5}$=Weighting factor for Dyskinesia $D_{A,3\text{-}5}$

[0255] $D_{E,3\text{-}5}$=Dyskinesia level determined by electromyographic (EMG) monitoring

[0256] $W_{DE,3\text{-}5}$=Weighting factor for Dyskinesia $D_{E,3\text{-}5}$

[0257] $D_{P,3\text{-}5}$=Dyskinesia level determined by peripheral nerve electrode monitoring

[0258] $W_{DP,3\text{-}5}$=Weighting factor for Dyskinesia $D_{P,3\text{-}5}$

[0259] $D_{C,3\text{-}5}$=Dyskinesia level determined by cortical electrode monitoring

[0260] $W_{DC,3\text{-}5}$=Weighting factor for Dyskinesia $D_{C,3\text{-}5}$

[0261] $D_{N,3\text{-}5}$=Dyskinesia level determined by neural monitoring, including subcortical nuclei,

[0262] white matter tracts, and spinal cord neurons

[0263] $W_{DN,3\text{-}5}$=Weighting factor for Dyskinesia $D_{N,3\text{-}5}$

[0264] $D_{S,3\text{-}5}$=Dyskinesia level determined by acoustic sensor monitoring

[0265] $W_{DS,3\text{-}5}$=Weighting factor for Dyskinesia $D_{S,3\text{-}5}$

[0266] The third intrinsic disease state DS_{I3} represents the level of rigidity.

$$DS_{I3}=R_N$$

[0267] Where Normalized Rigidity Magnitude R_N is given by:

$$R_N=R_A*W_{RA}+R_E*W_{RE}+R_P*W_{RE}+R_C+W_{RC}+R_N*W_{RN}+R_S*W_{RS}+R_E*W_{RE}$$

[0268] Where

[0269] $R_{A,3\text{-}5}$=Rigidity level determined by acceleration monitoring

[0270] $W_{RA,3\text{-}5}$=Weighting factor for Rigidity $R_{A,3\text{-}5}$

[0271] $R_{E,3\text{-}5}$=Rigidity level determined by electromyographic (EMG) monitoring

[0272] $W_{RE,3\text{-}5}$=Weighting factor for Rigidity $R_{F,3\text{-}5}$

[0273] $R_{P,3\text{-}5}$=Rigidity level determined by peripheral nerve electrode monitoring

[0274] $W_{RP,3\text{-}5}$=Weighting factor for Rigidity $R_{P,3\text{-}5}$

[0275] $R_{C,3\text{-}5}$=Rigidity level determined by cortical electrode monitoring

[0276] $W_{RC,3\text{-}5}$=Weighting factor for Rigidity $R_{C,3\text{-}5}$

[0277] $R_{N,3\text{-}5}$=Rigidity level determined by neural monitoring, including subcortical nuclei,

[0278] white matter tracts, and spinal cord neurons

[0279] $W_{RN,3-5}$=Weighting factor for Rigidity $R_{N,3-5}$

[0280] $R_{S,3-5}$=Rigidity level determined by acoustic sensor monitoring

[0281] $W_{RS,3-5}$=Weighting factor for Rigidity $R_{S,3-5}$

[0282] The fourth intrinsic disease state DS_{I4} represents the level of bradykinesia.

$$DS_{I4}=B_N$$

[0283] Where Normalized Bradykinesia Magnitude BN is given by:

$$B_N=B_A*W_{BA}+B_E*W_{BE}+B_P*W_{PE}+B_C+W_{BC}+B_N*W_{BN}+B_S*W_{BS}+B_E*W_{BE}$$

[0284] Where

[0285] R_A=Bradykinesia level determined by acceleration monitoring

[0286] W_{RA}=Weighting factor for Bradykinesia R_A

[0287] R_E=Bradykinesia level determined by electromyographic (EMG) monitoring

[0288] W_{RE}=Weighting factor for Bradykinesia R_E

[0289] R_P=Bradykinesia level determined by peripheral nerve electrode monitoring

[0290] W_{RP}=Weighting factor for Bradykinesia R_P

[0291] R_C=Bradykinesia level determined by cortical electrode monitoring

[0292] W_{RC}=Weighting factor for Bradykinesia R_C

[0293] R_N=Bradykinesia level determined by neural monitoring, including subcortical nuclei,

[0294] white matter tracts, and spinal cord neurons

[0295] W_{RN}=Weighting factor for Bradykinesia R_N

[0296] R_S=Bradykinesia level determined by acoustic sensor monitoring

[0297] W_{RS}=Weighting factor for Bradykinesia R_S

[0298] The control law drives these disease states toward their reference values, nominally 0, according to a vector of weights, establishing a prioritization.

[0299] Side effects and other parameters, such as power consumption and current magnitude, are also quantified and minimized according to a cost function.

[0300] One advantage of the present invention is that it provides prediction of future symptomatology, cognitive and neuromotor functionality, and treatment magnitude requirements. Such predictions may be based on preset, learned and real-time sensed parameters as well as input from the patient, physician or other person or system. The prediction of future symptomatology is based upon any of several weighted combination of parameters. Based upon prior characterization of the circadian fluctuation in symptomatology (that is, tremor magnitude for deep brain stimulation or level of depression for stimulation of other sites including locus ceruleus), future fluctuations may be predicted. An estimate, or model, of fluctuation may be based upon a combination of preset, learned, and real-time sensed parameters. Preset parameters are derived from clinical studies designed specifically for the purpose of gathering such data, or from estimates extracted from data gleaned from published literature. Real-time sensed parameters are derived from the current states (and changes, i.e. derivatives and other processed signals, thereof) of sensed and processed signals. Learned parameters are based upon the time histories of previously sensed signals. For example, the circadian fluctuation in tremor amplitude may be sensed; a weighted average of this data collected over numerous prior days provides as estimate of the expected tremor amplitude as well as a standard deviation and other statistical parameters to characterize the anticipated tremor amplitude. Similarly, in the presence of closed-loop feedback, the level of stimulation required to reduce or eliminate tremor may be used as an estimate of the "amplitude" or state of the underlying disease.

[0301] Another advantage of the present invention is that it performs automated determination of the optimum magnitude of treatment—by sensing and quantifying the magnitude and frequency of tremor activity in the patient, a quantitative representation of the level or "state" of the disease is determined. The disease state is monitored as treatment parameters are automatically varied, and the local or absolute minimum in disease state is achieved as the optimal set of stimulation parameters is converged upon. The disease state may be represented as a single value or a vector or matrix of values; in the latter two cases, a multivariable optimization algorithm is employed with appropriate weighting factors.

[0302] Having now described several embodiments of the invention, it should be apparent to those skilled in the art that the foregoing is merely illustrative and not limiting, having been presented by way of example only. For example, all signal paths may transmit a single or plurality of signals without departing from the present invention. Numerous modifications and other embodiments are within the scope of one of ordinary skill in the art and are contemplated as falling within the scope of the invention as defined by the appended claims.

[0303] Current implanted neurostimulators suffer from limited battery life necessitating replacement. The original filing of this invention teaches a closed-loop technique which allows lower average power delivery, providing extended batter life. A further improvement is taught in the present invention. The present invention teaches a novel form of power delivery, in which electromagnetic power is provided externally and radiated transcutaneously through the skin **382** to the implanted circuit.

[0304] A multiplicity of electromagnetic coils is used, to provide electromagnetic fields of multiple non-collinear orientations. The purpose of this design is to overcome fluctuations and interruptions in power that otherwise occur when the implanted circuit moves along with the body parts relative to electromagnetic coils.

[0305] An additional improvement is taught in the application of time multiplexing of signals delivered by said multiplicity of electromagnetic coils. Multiplexing signals in time from a multiplicity of coils allows electromagnetic energy to be delivered at a multiplicity of spatial orientations without mutual interference between fields. In one embodiment, three coils are positioned such that they are mutually orthogonal. Regardless of the orientation of the implanted circuit, mutual coupling between the implanted circuit and at least one element of the coil array will facilitate power transmission.

[0306] The present invention further includes an embodiment in which the coils are embedded in a flexible cloth assembly, including but not limited to a pillow, bandana, hat, or other accessory or piece of apparel.

[0307] Additionally, low profile mounting of the neurological control system **999** is taught, including a design in which the device is implanted entirely adjacent to the head, avoiding the subcutaneous cables plaguing current designs with high failure and fracture rates. Additionally, a low-profile design is taught in which the neurological control system is implanted beneath the skin and recessed in the calvarum.

[0308] **FIG. 16** and **FIG. 18** show two coil and three coil embodiments, respectively, of power delivery unit **413**. Different numbers of coils may be used without departing from the present invention. Each of electromagnetic coil **372**, **373**, **374** radiates electromagnetic power, represented by magnetic flux **375**, **376**, **377**, which radiates through the skin **382** and is then converted to electrical energy by power conversion unit **378**. Power is then transmitted from power conversion unit **378** via power cable **379** to stimulating and recording circuit **26**, a component of the neurological control system **999**.

[0309] A single or multiplicity of coil holder **380** holds electromagnetic coil **372**, **373**, **374** in place. Coil holder **380** may be placed atop bedding **381**, which may include a pillow, blanket, or mattress. Alternatively, coil holder **380** may be placed below bedding **381**, which may include a pillow, blanket, mattress, or other element.

[0310] **FIG. 17** shows this configuration at greater magnification, in which magnetic flux **375** is seen to penetrate skin **382**.

[0311] **FIG. 19** depicts power delivery unit **413** with coil holder **380** shown holding electromagnetic coil **372**, **373**, **374** in place, as seen from above. In this design, all electromagnetic coils **372**, **373**, **374** are contained within coil holder **380**. For illustrative purposes, coil holder **380** is shown in this embodiment as a convex shape. Other shapes may be used without departing from the present invention.

[0312] **FIG. 20** shows coil holder **380** with electromagnetic coil **372**, **373**, **374** in place, as seen from above. In this design, all electromagnetic coils **372**, **373**, **374** are contained within coil holder **380**, and could holder **380** has For illustrative purposes, coil holder **380** is shown in this embodiment as a multi-lobed shape, with electromagnetic coil **372**, **373**, **374** contained within coil pockets **383**, **384**, **385**, respectively. Other shapes may be used without departing from the present invention.

[0313] Electromagnetic coils **372**, **373**, **374** may be permanently affixed within coil holder **380**. Alternatively, electromagnetic coils **372**, **373**, **374** may be removable form coil holder **380** to facilitate cleaning or laundering of coil holder **380**.

[0314] Further, use of electromagnetic fields, as direct modulators of neural activity is taught in the present invention. [This also references provisional application filed Jul. 29, 2002.]

[0315] As shown in **FIG. 21**, electromagnetic coils **372**, **373**, **374** may be positioned by coil holder **380** to lie in close proximity to the head **398** of a patient. Magnetic flux **375**, **376**, **377**, which radiate through the skin **382** penetrate into underlying brain **251**, or other neural tissue **354**, and generate electrical currents. Said electrical currents serve to stimulate or inhibit neural activity. Other neural tissue includes but is not limited to brain **251**, brainstem, spinal cord, peripheral nerves, cranial nerves, neurosensory organs, and other structures.

[0316] **FIG. 22** shows multiple coil embodiments. Different numbers of coils may be used without departing from the present invention. **FIG. 22** shows a distributed arrangement of coils, to facilitate strong signal coupling with a minimum of tissue heating or sensory stimulation. Brain **251** is shown underlying skin **382** in head **398**. Temporal cortex **255** and thalamus **270** are shown.

[0317] Headband coil holder **386** is in mechanical connection with each of electromagnetic coils **387**, **388**, **389**, **390**, **391**, **392**, **393**, which radiate electromagnetic power through the skin **382**. This is then converted to electrical energy by power conversion unit **378**, which is implanted in any of several locations, shown in **FIG. 17** and **FIG. 18**, omitted here for diagram clarity. As shown in **FIG. 17**, power is then transmitted from power conversion unit **378** via power cable **379** to stimulating and recording circuit **26**, a component of the neurological control system **999**.

[0318] Power source **397** provides power to power modulator **396**, which modulates power on a carrier frequency and is electrically connected via electromagnetic coil cable **394** to electromagnetic coils **387**, **388**, **389**, **390** which radiate power through skin **382**. Power modulator **396** is also electrically connected via electromagnetic coil cable **395** to electromagnetic coils **391**, **392**, **393** which radiate power through skin **382**. Electromagnetic coils **387**, **388**, **389**, **390**, **391**, **392**, **393** can be arranged in a different geometrical or anatomical configuration, with the same, a higher or a lower number of electromagnetic coils, without departing from the present invention. Electromagnetic coils **387**, **388**, **389390**, **391**, **392**, **393** may alternatively be affixed to a different form of apparel, clothing, or fixture without departing from the present invention. Such embodiments include a hat, cap, bandana, or other device.

[0319] **FIG. 23** shows the paracranial design, with implanted components in close proximity to the head **398**. This design eliminates the pervasive problem of moving parts, inherent in all current technology devices. All cabling is in close approximation to the calvarum, a rigid structure; therefore all implanted parts remain stationary. Since no implanted parts are subjected to movement, they are at greatly reduced risk for mechanical fatigue, the single highest failure mode for current implanted neuromodulators. This innovation dramatically reduces the frequency and likelihood for re-operation to repair broken implanted components, a major concern in all patients and particularly the elderly, who are often poor operative candidates, and who are at highest risk for many of the neurological and neurodegenerative diseases amenable to treatment by neuromodulation.

[0320] **FIG. 23** depicts an embodiment in which the head **398** of the patient lies atop coil holder **380**, placing the power conversion unit **378** within at least one of magnetic flux **375**, **376**, **377**. Power conversion unit **378** converts power transmitted as magnetic flux **375**, **376**, **377** into electrical energy, which is transmitted by power cable **379** to

stimulating and recording circuit **26**, a component of the neurological control system **999**. Stimulating and recording circuit **26** generates neuromodulation signal that is transmitted via connecting cable **8** to intracranial stimulating electrode array **37** , depicted in more detail in **FIG. 1**, which deliver neuromodulation signal to brain **251** or other neural tissue **354**. Connecting cable **8** furthermore provides bi-directional electrical connection between intracranial electrodes **246** and stimulating and recording circuit **26**., a component of neurological control system **999**.

[**0321**] Catheter anchor **29** is in mechanical communication with intracranial catheter **7** and secures it to calvarum **9**. Intracranial electrodes **246** are mounted on or incorporated into intracranial catheter **7**.

[**0322**] **FIG. 24** shows power conversion unit **378** includes electromagnetic coupling element **399**, such as a wire coil, circuit board tracing coil, or equivalent implementation. In one embodiment, power conversion unit **378** also includes power conversion circuit **400**, which converts electrical signal induced by any of magnetic flux **375**, **376**, **377**, on electromagnetic coupling element **399**, into at least one of electrical power and electrical signal, which are transmitted via power cable **379** to stimulating and recording circuit **26**, which generates neuromodulation signal **412**, which is transmitted on connecting cable **8** to intracranial catheter **7**.

[**0323**] Power conversion circuit **400** includes rectifier **401**, energy storage element **402**, regulator **403**, filter **404**, demodulator **405**, and amplifier **406**. Electromagnetic coupling element **399** is electrically connected via electromagnetic coupling element cable **407** to power conversion circuit **400**.

[**0324**] Either of magnetic flux **375**, **376**, **377** passing through electromagnetic coupling element **399** induces induced current **408**, which is transmitted via electromagnetic coupling element cable **407** to power conversion circuit **400**. Induced current **408** is rectified by rectifier **401** to a direct current form and is stored or lowpass filtered by energy storage element **402** and regulated by regulator **403** and then transmitted as regulated power **409** by power cable **379** to stimulating and recording circuit **26**., a component of neurological control system **999**.

[**0325**] **FIG. 25** shows the communication circuit. This circuit also provides bi-directional communication with external devices, including power delivery unit **413** as well as with patient interface module **55** and supervisory module **56**, shown in **FIG. 1**.

[**0326**] Either of magnetic flux **375**, **376**, **377** passing through electromagnetic coupling element **399** induces induced current **408**, which is transmitted via electromagnetic coupling element cable **407** to power conversion circuit **400**. Induced current **408** is filtered by filter **404**, then demodulated by **405**,then amplified by amplifier **406**, then transmitted as incoming data stream **410** via power cable **379** to stimulating and recording circuit **26**. At least one of digital to analog or analog to digital conversion may also be performed without departing from the present invention.

[**0327**] Outgoing data stream **411** is transmitted from stimulating and recording circuit **26** via power cable **379** to power conversion circuit **400** where it is modulated by modulator **414** and then amplified by amplifier **415** and transmitted as inducing current **416** along electromagnetic coupling element cable **407** to electromagnetic coupling element **399** where it generated magnetic flux that is detected and decoded by external devices, including power delivery unit **413** as well as with patient interface module **55** and supervisory module **56**, shown in **FIG. 1**. At least one of digital to analog or analog to digital conversion may also be performed without departing from the present invention.

[**0328**] **FIG. 26** depicts the overall system, with power conversion unit **378** connected via power cable **379** to power management unit **417**, a component of stimulating recording and power circuit **419**. Power management unit **417** is in electrical connection with energy storage unit **418** and in electrical connection with stimulating and recording circuit **26**.

[**0329**] In one preferred embodiment, energy storage unit **418** is implemented as a capacitor. Power management unit **417** converts regulated power **409** into charge, which is stored in energy storage unit **418**.

[**0330**] In another preferred embodiment, energy storage unit **418** is implemented as a rechargeable battery. Power management unit **417** converts regulated power **409** into current, which recharges energy storage unit **418**.

[**0331**] When regulated power **409** is insufficient to power stimulating and recording circuit **26**, power management unit **417** withdrawals energy from energy storage unit **418** and delivers energy to stimulating and recording circuit **26**.

[**0332**] An embodiment of this invention further includes novel geometrical features to enhance form and function of this neuromodulation system as well as any neural stimulation system. One invention taught is the refinement of the implanted case such that one side is concave. An additional invention taught is the refinement of the implanted case such that one side is convex. A further extension of this invention includes the use of at least one concave side and at least one convex side. Advantages of this design include the close positioning of the casing against the intact outer table of the skull of the patient.

[**0333**] **FIG. 27** shows stimulating and recording unit **43** enclosed within system enclosure **434**, implanted beneath the scalp **10**, overlying the calvarum **9**. System enclosure **434** is designed with an enclosure inner surface **427** and enclosure outer surface **426**. In one preferred embodiment, enclosure inner surface **427** and enclosure outer surface **426** are concave and convex, respectively.

[**0334**] By designing enclosure inner surface **427** to be concave, system enclosure **434** may be placed tightly and securely against calvarum **9**. This represents a substantial innovation over flat machined enclosures, the designs currently implanted elsewhere and that are based upon established pacemaker technology. This innovation reduces or eliminates movement of the implant that would otherwise occur with existing devices.

[**0335**] By designing enclosure outer surface **426** to be convex, system enclosure **434** may be placed against calvarium **9** with a substantially improved cosmetic result and less displacement of scalp **10** or other skin **382**. This represents a substantial innovation over flat machined enclosures, the designs currently implanted elsewhere and that are based upon established pacemaker technology. This inno-

vation reduces or eliminates movement of the implant that would otherwise occur with existing devices.

[0336] Furthermore, each of enclosure inner surface **427** and enclosure outer surface **426** serve to reduce the profile of system enclosure **434** and to improve the cosmetic appearance of the overlying skin **382** or scalp **10**.

[0337] In this embodiment, system enclosure **434** overlies the intact pericranium **420**. This facilitates attachment of System enclosure **434** to the pericranium **420** by means of mechanical attachment **424**, providing mechanical attachment between mechanical attachment mount **425** and at least one of pericranium **420**, skin **382**, scalp **10**, or other tissue of the patient. Mechanical attachment **424**, may be implemented as sutures, wires, clips, or other attachment means. In this embodiment, the calvarum outer table **421**, calvarum marrow layer **422**, and calvarum inner table **423** remain intact.

[0338] Alternatively, System enclosure **434** is implanted beneath the scalp **10** and beneath the pericranium **420**, directly overlying the calvarum **9**. In this embodiment, the pericranium **420** serves to secure System enclosure **434** in place against the calvarum **9**.

[0339] **FIG. 28** depicts system enclosure **434** secured to the calvarium **9** using screws **429**, **431** which are shown inserted through screw mounts **428**, **430**, respectively, into calvarium **9**. Additional or fewer screws and screw mounts may be used without departing form the present invention. Screws **429**, **431** may penetrate in depth to the level of the calvarium outer table **421**, calvarium marrow layer **422**, or calvarium inner table **423**.

[0340] **FIG. 29** depicts a lower profile design in which the system enclosure **434** is partially recessed recessed into the calvarium **9**. Protruding component **432** lies above the outer surface of calvarium **9**, and recessed component **433** lies below the outer surface of calvarium **9**. Recessed component **433** is shown occupying volume previously occupied by calvarium outer table **421**. Recessed component **433** may also occupying volume previously occupied by calvarium marrow layer without departing from the present invention.

[0341] **FIG. 30** depicts a lower profile design in which the system enclosure **434** is partially recessed into the calvarium **9**. Protruding component **432** lies above the outer surface of calvarium **9**, and recessed component **433** lies below the outer surface of calvarium **9**. Recessed component **433** is shown occupying volume previously occupied by calvarium outer table **421**, calvarium marrow **422**, and calvarium inner table **423**. System enclosure **434** is shown secured to the calvarium outer table **421** portion of calvarium **9** using screws **429**, **431** which are shown inserted through screw mounts **428**, **430**, respectively. Additional or fewer screws and screw mounts may be used without departing form the present invention. Screws **429**, **431** may penetrate in depth to the level of the calvarium outer table **421**, calvarium marrow layer **422**, or calvarium inner table **423**.

[0342] **FIG. 31** depicts a lower profile design in which the system enclosure **434** is fully recessed into the calvarium **9**. Recessed component **433** lies below the outer surface of calvarium **9**. Recessed component **433** is shown occupying volume previously occupied by calvarium outer table **421**, calvarium marrow **422**, and calvarium inner table **423**. System enclosure **434** is shown secured to the calvarium outer table **421** portion of calvarium **9** using screws **429**,**431** which are shown inserted through screw mounts **428**,**430**, respectively. Additional or fewer screws and screw mounts may be used without departing form the present invention. Screws **429**, **431** may penetrate in depth to the level of the calvarium outer table **421**, calvarium marrow layer **422**, or calvarium inner table **423**.

[0343] **FIG. 32** depicts a lower profile design in which the system enclosure **434** is fully recessed into the calvarium **9**. Recessed component **433** lies below the outer surface of calvarium **9**. Recessed component **433** is shown occupying volume previously occupied by calvarium outer table **421**, calvarium marrow **422**, and calvarium inner table **423**. In one embodiment shown, enclosure inner surface **427** is shown extending below the level of calvarium inner table **423**. This design facilitates close proximity of stimulating and recording unit **43** to underlying neural tissue **354** and brain **251**, valuable in sensing neural activity and in delivering an output neuromodulation signal (NMS) **998** via intracranial stimulating electrode array **37**, shown in **FIG. 1** and **FIG. 2**.

[0344] System enclosure **434** is shown secured to the calvarium inner table **423** portion of calvarium **9** using screws **429**, **431** which are shown inserted through screw mounts **428**, **430**, respectively. Additional or fewer screws and screw mounts may be used without departing form the present invention. Alternate means of mechanically attaching system enclosure **434** to calvarium **9** may be employed without departing from the present invention.

[0345] **FIG. 33** depicts the neurological control system **999** employing a lower profile design in which the system enclosure **434** is recessed into the calvarium **9**. Power delivery unit **413**, via generated magnetic flux, transmits power to power conversion unit **378**, which transmits power via power cable **379** to stimulating and recording circuit **26**, part of stimulating and recording unit **43**, contained within system enclosure **434**. Stimulating and recording circuit **26** is electrically connected via connecting cable **8** to intracranial catheter **7** which provides electrical connection to intracranial stimulating electrode array **37** and intracranial recording electrode array **38** . Intracranial catheter is mechanically secured via catheter anchor **29** to calvarium **9**.

[0346] **FIG. 34** depicts the neurological control system **999** employing a lower profile and more compact design in which the system enclosure **434** is recessed into the calvarium **9**. Power delivery unit **413**, via generated magnetic flux, transmits power to power conversion unit **378**, which transmits power via power cable **379** to stimulating and recording circuit **26**, part of stimulating and recording unit **43**, contained within system enclosure **434**.

[0347] Stimulating and recording circuit **26** is in close proximity to intracranial catheter **7**, this includes but is not limited to a preferred embodiment in which stimulating and recording circuit **26** is recessed into calvarium at the site surrounding the entry point at which intracranial catheter **7** passes from outside the calvarium to inside the calvarium. Stimulating and recording circuit **26** is electrically connected directly or via connecting cable **8** to intracranial catheter **7** which provides electrical connection to intracranial stimulating electrode array **37** and intracranial recording electrode array **38**. Intracranial catheter is mechanically secured via catheter anchor **29** to calvarium **9**.

[0348] An advantage of the closed-loop system includes the natural variability of the output signal. The nervous system exhibits a natural tendency to attenuate responses to continuous stimuli, such as continuous background noises. A natural example includes imperceptibility of stationary visual images on frog retina. A related example is electrical stimulation of peripheral nerves, such as stimulation of the tibial or peroneal nerves for use in eliciting the flexion withdrawal reflex to facilitate gait restoration in paraplegics. With time, these reflexes attenuate or habituate, reducing their effectiveness.

[0349] The time-varying nature of a closed-loop signal, responding to environmental and system fluctuations and noise, the natural neural process of habituation to constant signals will be reduced.

[0350] Furthermore, by specifically and intentionally altering the output signal, such as intermittently reducing the amplitude of the stimulus, and allowing the closed-loop system to compensate in between these intentional amplitude restrictions, further reduction and prevention of habituation is achieved.

[0351] As shown previously, ventricular electrode catheter **1** is shown positioned within the lateral ventricle **2**, with ventricular electrode **17** in contact with the CSF fluid **18** in lateral ventricle **2**. Cortical electrode **3** is in contact with the CSF fluid overlying the cerebral cortex **19**. Cortical electrode **3** may be placed over any portion of the cerebral or cerebellar cortex without departing from the present invention. Hippocampal electrode **4** is shown underlying the hippocampal regions of the cerebrum.

[0352] The parenchyma of the nervous system is used as a dielectric to establish a voltage potential gradient between any of the CSF reservoirs, including the lateral ventricles, third ventricle, cerebral aqueduct, fourth ventricle, foramen of lushke, foramen of magende, basal cisterns, CSF overlying the cerebellar hemispheres, CSF overlying the cerebral hemispheres, central spinal canal, CSF overlying the spinal cord, and CSF overlying the spinal nerves and roots.

[0353] Patients currently implanted with neuromodulation devices must undergo repeat surgery to replace implanted pulse generators every 3-5 years to replace units when batteries fail. Tradeoffs between acceptable implanted device size and limited energy density with current battery technology are responsible for this pervasive problem. Many of these patients are older, and the risks of general anesthesia and surgery are not insignificant. Subjecting these patents to these large risks is a pervasive problem in the field of neuromodulation. The present invention overcomes these limitations with a clever design employing a novel external radiofrequency power delivery system.

[0354] The present embodiment of the invention includes an external coil use of Limited energy density because technology is limited.

[0355] The present embodiment of this invention teaches a device, method of implantation, and surgical tools for the rapid implantation of a neuromodulation system. Current devices suffer form the need to implant a pulse generator in the subclavicular pocket or other site remote form the site of electrode implantation. Because of this, subcutaneous cables must be implanted to connect the implanted circuit to the implanted stimulating electrode. The present invention teaches a device and method for implanting the circuit in close proximity to the site of stimulation. The design taught herein obviates the need for any subcutaneous cables. Additionally, it teaches a compact design that allows placement of the implanted circuit and the implantation of the intracranial electrode catheter through a single hole. This is a substantial improvement, facilitating much more rapid implantation and eliminating the need for subcutaneous cable implantation. As a result, surgical procedures are much faster and may be performed under local anesthesia, no longer requiring general anesthesia. This substantially increases the market size, allowing implantation in older and frail patients who might otherwise not benefit from neuromodulation technology because of their being poor surgical candidates, due to their inability to safely tolerate general anesthesia and long surgical procedures.

[0356] **FIGS. 35 & 36** depict the neurological control system **999** employing a lower profile and more compact design in which the system enclosure **434** is recessed into the calvarium **9**, shown in the anteroposterior and lateral projections, respectively. Power delivery unit **413**, is included within system enclosure **434**; however, power delivery unit **413** may also be external to system enclosure **434** without departing from the present invention.

[0357] Stimulating and recording circuit **26** is in close proximity to intracranial catheter **7**, this includes but is not limited to a preferred embodiment in which stimulating and recording circuit **26** is recessed into calvarium at the site surrounding the entry point at which intracranial catheter **7** passes from outside the calvarium to inside the calvarium. Stimulating and recording circuit **26** is electrically connected to intracranial catheter **7** which provides electrical connection to intracranial stimulating electrode array **37** and intracranial recording electrode array **38** . Intracranial catheter is mechanically secured to system enclosure **434**. System enclosure **434** is secured to calvarium **9** via mechanical attachment **424**, which is attached to system enclosure **434** via machine screw **439** or equivalent means and to calvarium **9** via bone screw **438** or equivalent means. Catheter recess **441** provides space for establishment of electrical and mechanical connection of stimulating and recording circuit **26** to intracranial catheter **7**. Catheter mount socket **437** and catheter mount ball **436**.

[0358] **FIG. 37** shows an expanded view of the neurological control system **999** also shown in **FIGS. 35 & 36**.

[0359] **FIGS. 38 & 39** depict a Calvarum drill bit is used to create a circular hole in the calvarium. The present invention teaches a major advance in the expeditiousness of the implantation procedure for creating a craniotomy, with particular relevance to the implantation of a neuromodulation device recessed in the calvarium. In a single pass, a drill bit creates a hole of a diameter similar to that of the implanted device. The outer diameter portion is created by calvarium bit outer diameter segment **443**. Attached to and deep to calvarium bit outer diameter segment **443** is the calvarium bit inner diameter segment **442**, which creates a hole in the calvarium of a smaller diameter. The resulting geometry, as seen in **FIG. 38** and **FIG. 39**, produces bone ledge **447**. Bone ledge **447** serves to provide mechanical support to system enclosure **434**, preventing system enclosure **434** from becoming displaced and impinging upon brain **251**.

[0360] Intracranial catheter **7** is secured to system enclosure **434** by means of catheter mount ball **436**. A compressible material is either adjacent to or comprises catheter mount ball **436**.

[0361] **FIG. 40** depicts the path of the intracranial catheter **7** and its connection to the electrical elements of stimulating and recording circuit **26**, which is contained within system enclosure **434** and in close proximity to intracranial catheter **7**. Intracranial Catheter Proximal End **451** is largely contained within or at least has a component that occupies a portion of the catheter recess **441**. Intracranial Catheter Proximal Electrode **452** and Intracranial Catheter Proximal Electrode **453** are shown. Additional electrodes or alternate connection means may be employed without departing from the present invention.

[0362] In one embodiment, set screws are used to electrically connect electrodes on intracranial catheter **7** to contacts mounted on system enclosure **434**. Electrode contacts and set screw are recessed in catheter recess **441** in system enclosure **434**.

[0363] System enclosure is constructed from a castable material, such as potted epoxy, methylmethacrylate, or other plastic, silicone, or polymer. RF electrodes are included within the system enclosure. A titanium or stainless steel shield may be included into eh center of the system enclosure **434**. The outer surface of system enclosure **434** may have a convex shape, to better approximate the shape of the calvarium removed and replaced by system enclosure **434**, and the convex shape of outer surface of system enclosure **434** minimized stress concentrations on the overlying scalp **10**.

[0364] Disease state is estimated using a measure or estimate of chaos of neural activity. Such measures include Lyupanov functions and other measures of chaos or system synchronicity or correlation.

[0365] Bottom surface of system enclosure **434** may include electrodes used for at least one of recording, stimulation, ground, or reference electrode functions.

[0366] An array of at least one EEG electrode is used for recording electroencephalographic signals. Said EEG electrode may be placed in at least one of a subgaleal location, subcutaneous location, epidural location, subdural location, intracerebral location, or other location enabling EEG electrode to sense neural activity.

[0367] An advancement in intracranial catheter design is taught in the present invention. Intracranial catheter **7** includes a microelectrode channel **448**. Microelectrode **449** is inserted through microelectrode channel **448**, with microelectrode tip **450** protruding beyond tip of intracranial catheter **7**. Microelectrode tip **450** is used to record single cell activity to identify neural structures during advancement of intracranial catheter **7** through brain **251**. At the completion of the insertion of intracranial catheter **7** through brain **251**, microelectrode **449** may be removed from intracranial catheter **7**.

[0368] This allows microelectrode recording and implantation of intracranial catheter **7** during a single pass, saving substantial time during the implantation procedure.

[0369] During and Following implantation, closed-loop optimization of electrical field shaping is performed by control circuit **72**.

1. Closed-loop neural modulation for the control of epilepsy

2. Closed loop neural modulation apparatus as in claim 1, with at least one electrode positioned within any of the ventricles

3. Closed loop neural modulation apparatus as in claim 1, with at least one electrode positioned in contact with the CSF

4. Closed loop neural modulation apparatus as in claim 1, with at least one electrode positioned in contact with the CSF lining the convexity of at least one cerebral or cerebellar hemisphere

5. Closed loop neural modulation apparatus as in claim 1, with at least one electrode positioned in contact with the CSF lining the convexity of the hippocampus

6. Closed loop neural modulaton apparatus as in claim 1, with at least one electrode positioned in contact with the CSF lining the convexity of the portion of the cortex to be controlled.

7. Closed loop neural modulation apparatus as in claim 1, wherein a voltage potential gradient is established along the soma-axonal axis of the neuron.

8. A system for neural modulation in the treatment of disease, comprising:

(A) a signal conditioning circuit

(B) a sensor array in electronic communication with said signal conditioning circuit;

(C) a signal processor in electronic communication with said signal conditioning circuit

(D) a control circuit in electronic communication with said signal processor

(E) an output stage circuit in electronic communication with said control circuit

(F) a stimulating electrode array, in electronic communication with said output circuit

(G) a power conversion unit in electromagnetic communication with an electromagnetic coil and in electronic communication with at least one of said sensor array, said signal conditioning circuit, said signal processor, said control circuit, said output stage circuit, said stimulating electrode array.

9. A system for neural modulation in the treatment of disease, comprising:

(A) a signal conditioning circuit

(B) a sensor array in electronic communication with said signal conditioning circuit;

(C) a signal processor in electronic communication with said signal conditioning circuit

(D) a control circuit in electronic communication with said signal processor

(E) an output stage circuit in electronic communication with said control circuit

(F) a stimulating electrode array, in electronic communication with said output circuit

(G) a power conversion unit in electronic communication with at least one of said sensor array, said signal

conditioning circuit, said signal processor, said control circuit, said output stage circuit, said stimulating electrode array

10. A system for neural modulation in the treatment of disease, as recited in claim 9, further comprising an electromagnetic coil in electromagnetic communication with said power conversion unit.

11. A system for neural modulation in the treatment of disease, as recited in claim 10, wherein said electromagnetic coil is external to the body.

12. A system for neural modulation in the treatment of disease, as recited in claim 10, wherein said system is implanted in the body.

13. A system for neural modulation in the treatment of disease, as recited in claim 11, wherein said system is implanted in the body.

14. A system for neural modulation in the treatment of disease, as recited in claim 9, further comprising a multiplicity of electromagnetic coils in electromagnetic communication with said power conversion unit.

15. A system for neural modulation in the treatment of disease, as recited in claim 14, wherein said multiplicity of electromagnetic coils are mutually orthogonal.

16. A System for neural modulation in the treatment of disease, as recited in claim 14, wherein said multiplicity of electromagnetic coils have intersecting electromagnetic fields.

17. A system for neural modulation in the treatment of disease, as recited in claim 14, wherein said multiplicity of electromagnetic coils are spaced to have overlapping electromagnetic fields.

18. A system for neural modulation in the treatment of disease, as recited in claim 14, wherein said multiplicity of electromagnetic coils are spaced to have non-overlapping electromagnetic fields.

19. A system for neural modulation in the treatment of disease, as recited in claim 14, wherein said multiplicity of electromagnetic coils are positioned such that at least one said electromagnetic coil is in electromagnetic communication with said system.

20. A system for neural modulation in the treatment of disease, as recited in claim 14, wherein said multiplicity of electromagnetic coils are positioned such that at least one said electromagnetic coil is in electromagnetic communication with a component of said system.

21. A system for neural modulation in the treatment of disease, as recited in claim 19, wherein said multiplicity of electromagnetic coils are energized sequentially.

22. A system for neural modulation in the treatment of disease, as recited in claim 19, wherein said multiplicity of electromagnetic coils are energized in a time-multiplexed manner.

23. A system for neural modulation in the treatment of disease, as recited in claim 19, wherein said multiplicity of electromagnetic coils are positioned such that said electromagnetic communication is maintained regardless of position or orientation of said system.

24. A system for neural modulation in the treatment of disease, as recited in claim 19, comprising two electromagnetic coils.

25. A system for neural modulation in the treatment of disease, as recited in claim 19, comprising three electromagnetic coils.

26. A system for neural modulation in the treatment of disease, as recited in claim 19, comprising at least two electromagnetic coils.

27. A system for neural modulation in the treatment of disease, as recited in claim 10, further comprising a coil holder in mechanical communication with said electromagnetic coil.

28. A system for neural modulation in the treatment of disease, as recited in claim 27, wherein said coil holder is constructed from a flexible material.

29. A system for neural modulation in the treatment of disease, as recited in claim 27, wherein said coil holder is constructed from materials that include cloth.

30. A system for neural modulation in the treatment of disease, as recited in claim 27, wherein said coil holder is constructed to further serve the function of a head rest.

31. A system for neural modulation in the treatment of disease, as recited in claim 27, wherein said coil holder is constructed to further serve the function of a pillow.

32. A system for neural modulation in the treatment of disease, as recited in claim 27, wherein said coil holder is constructed to further serve the function of a hat.

33. A system for neural modulation in the treatment of disease, as recited in claim 27, wherein said coil holder is constructed to further serve the function of a helmet.

34. A system for neural modulation in the treatment of disease, as recited in claim 27, wherein said coil holder is constructed to further serve the function of a head band.

35. A system for neural modulation in the treatment of disease, as recited in claim 27, wherein said coil holder is constructed to further serve the function of a bandanna.

36. A system for neural modulation in the treatment of disease, as recited in claim 27, wherein said coil holder is constructed to further serve the function of any apparatus or apparel worn on or about the head.

37. A system for neural modulation in the treatment of disease, as recited in claim 9, said power conversion circuit further including an energy storage element.

38. A system for neural modulation in the treatment of disease, as recited in claim 9, said power conversion circuit further including a capacitor serving as an energy storage element.

39. A system for neural modulation in the treatment of disease, as recited in claim 9, said power conversion circuit further including a rechargeable battery serving as an energy storage element.

40. A system for neural modulation in the treatment of disease, as recited in claim 9, said system implanted under the skin in close proximity to the head.

41. A system for neural modulation in the treatment of disease, as recited in claim 9, said system implanted under the scalp.

42. A system for neural modulation in the treatment of disease, as recited in claim 9, said system devoid of subcutaneous tunneled cables.

43. A system for neural modulation in the treatment of disease, as recited in claim 9, said system devoid of subcutaneous tunneled cables and risk of fracture thereof.

44. A system for neural modulation in the treatment of disease, as recited in claim 9, said system devoid of any moving parts or deformation of flexible parts.

45. A system for neural modulation in the treatment of disease, as recited in claim 9, said system configured for implantation under the scalp.

46. A system for neural modulation in the treatment of disease, as recited in claim 9, said system further comprising mechanical attachment facilitating secure attachment to calvarium.

47. A system for neural modulation in the treatment of disease, as recited in claim 9, said system further comprising screw mount facilitating secure attachment to calvarium.

48. A system for neural modulation in the treatment of disease, as recited in claim 9, said system further comprising mechanical attachment facilitating secure attachment to calvarium, devoid of cables traversing the neck.

49. A system for neural modulation in the treatment of disease, as recited in claim 9, said system further comprising mechanical attachment facilitating secure attachment to calvarium, said system with longest extracranial dimension less than 15 inches.

50. A system for neural modulation in the treatment of disease, as recited in claim 9, said system further comprising mechanical attachment facilitating secure attachment to calvarium, said system with longest extracranial dimension less than 10 inches.

51. A system for neural modulation in the treatment of disease, as recited in claim 9, said system further comprising mechanical attachment facilitating secure attachment to calvarium, said system with longest extracranial dimension less than 5 inches.

52. A system for neural modulation in the treatment of disease, as recited in claim 9, said system further comprising mechanical attachment facilitating secure attachment to calvarium, said system with longest extracranial dimension less than 3 inches.

53. A system for neural modulation in the treatment of disease, as recited in claim 9, said system further comprising mechanical attachment facilitating secure attachment to calvarium, said system with longest extracranial dimension less than 1 inch.

54. A system for neural modulation in the treatment of disease, as recited in claim 9, said system further comprising a recessed component.

55. A system for neural modulation in the treatment of disease, as recited in claim 9, said system further comprising a recessed component and a protruding component.

56. A system for neural modulation in the treatment of disease, as recited in claim 9, said system further comprising a recessed component and at least one screw mount.

57. A system for neural modulation in the treatment of disease, as recited in claim 9, said system further comprising a recessed component and a protruding component and at least one screw mount.

58. A system for neural modulation in the treatment of disease, as recited in claim 9, said system further comprising a recessed component and at least one mechanical attachment.

59. A system for neural modulation in the treatment of disease, as recited in claim 9, said system further comprising a recessed component and a protruding component and at least one mechanical attachment.

60. A system for neural modulation in the treatment of disease, as recited in claim 9, said system further comprising a recessed component occupying space vacated by removed portion of calvarium.

61. A system for neural modulation in the treatment of disease, as recited in claim 9, said system further comprising a recessed component occupying space vacated by removed portion of calvarium outer table.

62. A system for neural modulation in the treatment of disease, as recited in claim 9, said system further comprising a recessed component occupying space vacated by removed portion of calvarium marrow layer.

63. A system for neural modulation in the treatment of disease, as recited in claim 9, said system further comprising a recessed component occupying space vacated by removed portion of calvarium inner table.

64. A system for neural modulation in the treatment of disease, as recited in claim 9, said system further comprising a recessed component occupying space vacated by removed portion of at least one of calvarium outer table, calvarium marrow layer, and calvarium inner table.

65. A system for neural modulation in the treatment of disease, as recited in claim 9, said system further comprising a system enclosure.

66. A system for neural modulation in the treatment of disease, as recited in claim 9, said system further comprising a system enclosure, said system enclosure including an:

(A) enclosure outer surface, and

(B) enclosure inner surface

67. A system for neural modulation in the treatment of disease, as recited in claim 66, said enclosure outer surface comprising a convex shape.

68. A system for neural modulation in the treatment of disease, as recited in claim 66, said enclosure outer surface comprising a convex shape, of similar curvature to that of the outer surface of the calvarium.

69. A system for neural modulation in the treatment of disease, as recited in claim 66, said enclosure inner surface comprising a concave shape.

70. A system for neural modulation in the treatment of disease, as recited in claim 66, said enclosure outer surface comprising a concave shape, of similar curvature to that of the inner surface of the calvarium.

71. A system for neural modulation in the treatment of disease, as recited in claim 9, said system further comprising at least one screw mount.

72. A system for neural modulation in the treatment of disease, as recited in claim 9, said system further comprising at least one screw mount, said screw mount positioned for attachment to calvarium outer table.

73. A system for neural modulation in the treatment of disease, as recited in claim 9, said system further comprising at least one screw mount, said screw mount positioned for attachment to calvarium inner table.

74. A system for neural modulation in the treatment of disease, as recited in claim 9, said system further comprising at least one mechanical attachment.

75. A system for neural modulation in the treatment of disease, as recited in claim 9, said system further comprising at least one mechanical attachment mount, said mechanical attachment mount positioned for attachment to calvarium outer table.

76. A system for neural modulation in the treatment of disease, as recited in claim 9, said system further comprising at least one mechanical attachment mount, said mechanical attachment mount positioned for attachment to calvarium inner table.

77. A system for neural modulation in the treatment of disease, comprising:

(A) a signal conditioning circuit

(B) a sensor array in electronic communication with said signal conditioning circuit;

(C) a signal processor in electronic communication with said signal conditioning circuit

(D) a control circuit in electronic communication with said signal processor

(E) an output stage circuit in electronic communication with said control circuit

(F) a stimulating electrode array, in electronic communication with said output circuit

(G) a power conversion unit in electronic communication with at least one of said sensor array, said signal conditioning circuit, said signal processor, said control circuit, said output stage circuit, said stimulating electrode array

(H) a power delivery unit

78. A system for neural modulation in the treatment of disease, as recited in claim 77, said system further comprising a system enclosure.

79. A system for neural modulation in the treatment of disease, as recited in claim 78, said system further comprising a system enclosure, said system enclosure including an:

(A) enclosure outer surface, and

(B) enclosure inner surface

80. A system for neural modulation in the treatment of disease, as recited in claim 79, said enclosure outer surface contoured to be convex in shape.

81. A system for neural modulation in the treatment of disease, as recited in claim 79, said enclosure inner surface contoured to be concave in shape.

82. A system for neural modulation in the treatment of disease, as recited in claim 78, said enclosure designed to be recessed in calvarium.

83. A system for neural modulation in the treatment of disease, as recited in claim 78, said system further comprising mechanical attachment mount, extending from system enclosure to prevent displacement of said system enclosure into underlying neural tissue.

84. A system for neural modulation in the treatment of disease, as recited in claim 78, said system further comprising screw mount, extending from system enclosure to prevent displacement of said system enclosure into underlying neural tissue.

85. A system for neural modulation in the treatment of disease, comprising:

(A) a control circuit

(B) an output stage circuit in electronic communication with said control circuit

(C) a stimulating electrode array, in electronic communication with said output circuit

(D) a system enclosure, in mechanical communication with calvarium.

86. A system for neural modulation in the treatment of disease, as recited in claim 78, said system further comprising a power conversion unit in electronic communication with at least one of said sensor array, said signal conditioning circuit, said signal processor, said control circuit, said output stage circuit, said stimulating electrode array.

86. A system for neural modulation in the treatment of disease, as recited in claim 86, said system further comprising a power delivery unit.

87. A system for neural modulation in the treatment of disease, as recited in claim 85, said system further comprising a signal conditioning circuit.

88. A system for neural modulation in the treatment of disease, as recited in claim 85, said system further comprising a sensor array in electronic communication with said signal conditioning circuit.

89. A system for neural modulation in the treatment of disease, as recited in claim 85, said system further comprising a signal processor in electronic communication with said signal conditioning circuit.

90. A system for neural modulation in the treatment of disease, as recited in claim 9, said system employing intermittent fluctuation in neural modulation signal to reduce habituation.

91. A system for neural modulation in the treatment of disease, as recited in claim 9, said signal processor inducing intermittent fluctuation in neural modulation signal to reduce habituation.

92. A system for neural modulation in the treatment of disease, as recited in claim 9, said control circuit inducing intermittent fluctuation in neural modulation signal to reduce habituation.

93. A system for neural modulation in the treatment of disease, as recited in claim 9, said output stage circuit inducing intermittent fluctuation in neural modulation signal to reduce habituation.

94. A neural modulation system for use in treating disease which provides stimulus intensity which may be varied.

95. The device of claim 94, wherein said stimulation is at least one of activating, inhibitory, and a combination of activating and inhibitory.

96. The device of claim 94, wherein said disease is at least one of neurologic and psychiatric.

97. The device of claim 96, wherein said neurologic disease includes at least one of Parkinson's disease, Huntington's disease, Parkinsonism, rigidity, embolism, choreoathetosis, dystonia, akinesia, bradykinesia, hyperkinesia, other movement disorder, epilepsy, or the seizure disorder.

98. The device of claim 97, wherein said psychiatric disease includes at least one of depression, bipolar disorder, other affective disorder, anxiety, phobia, schizophrenia, multiple personality disorder.

99. The device of claim 96, wherein said psychiatric disorder includes substance abuse, attention deficit hyperactivity disorder, impaired control of aggression, or impaired control of sexual behavior.

100. The device of claim 94, wherein said stimulus intensity us time-varying.

101. The device of claim 100, wherein said time-varying stimulus intensity is preprogrammed.

102. The device of claim 101, wherein said time-varying stimulus intensity varies as a function of time, including but not limited to time of day, time relative to food intake, time of year, time since implantation, time since system was reprogrammed, and time since system was evaluated.

103. The device of claim 94, wherein sensory feedback is used in the determination of said stimulus intensity.

104. The device of claim 103, wherein said sensory feedback consists of at least one of electromyographic signals, accelerometers, electrodes, acoustic transducers, force sensors, pressure sensors, velocity sensors, neurotransmitter sensors, and chemical sensors.

105. The device of claim 104, wherein said sensory feedback electrodes may also function as stimulating electrodes.

106. The device of claim 104, wherein said sensory feedback electrodes record signals from at least one of the globus pallidus internus, globus pallidus externus, internal capsule, thalamus, the subthalamic nucleus, the caudate, the putamen, the ansa lenticularis, the corticospinal tract, the substantia nigra, the nigrostriatal tract, cerebral cortex, motor cortex, premotor cortex, sensory cortex, cerebellum, cerebellar cortex, cerebellar nuclei, cerebellar projections, the brain stem, the spinal cord, central nervous system, the cranial nerves the peripheral nervous system, peripheral nerves, ganglia, sensory organs, golgi tendons, muscle stretch receptors, intrafusal fibers, and extrafusal fibers.

107. The device of claim 104, wherein said accelerometer measures movement of at least one of the head, eyes, face, jaw, neck, axial skeleton, appendicular skeleton, arms, legs, hands, feet, fingers, toes, vertebral column, and pelvis.

108. The device of claim 104, wherein said electromyographic signal arise from at least one of facial muscles, extraocular muscles, muscles of mastication, neck muscles, shoulder muscles, arm muscles, wrist muscles, hand muscles, torso muscles, chest muscles, abdominal muscles, back muscles, buttock muscles, peroneal muscles, leg muscles, calf muscles, foot muscles, and visceral muscles.

109. A device as set forth in claim 97, wherein a control law is used in the determination of the stimulus intensity as a function of input which is a combination of at least one of sensory feedback signals, preprogrammed parameters, time of day, recumbency, level of activity, adaptive parameters, estimates of system performance, and user determined input.

110. The device as of claim 109, wherein said user determined input includes at least one of magnet movement over implanted sensor, muscle contraction, joint movement, audible input, switch activation, head position, head movement, shoulder position, and shoulder movement.

111. The device as of claim 109, wherein said control law is a combination of at least one of proportional function, derivative function, integral function, nonlinear function, multivariable function, sliding function, model reference function, adaptive function, filter function, and time-varying function of said input.

112. The device of claim 109, wherein said control law is proportional.

113. The device of claim 109, wherein said control law is of the proportional-derivative type.

114. The device of claim 109, wherein said control law is nonlinear.

115. The device of claim 109, wherein said control law is multivariable.

116. The device of claim 109, wherein said control law is sliding.

117. The device of claim 109, wherein said control law is adaptive.

118. The device of claim 109, wherein said control law is model reference.

119. The device of claim 102, wherein sensory feedback is used to estimate mental state.

120. The device of claim 119, wherein said estimated psychiatric state includes at least one of: mood, elation, depression, anxiety level, and psychosis.

121. A neurological control system for modulating the activity of at least one nervous system component, the neurological control system comprising:

at least one intracranial stimulating electrode, each constructed and arranged to deliver a neural modulation signal to at least one nervous system component;

at least one sensor, each constructed and arranged to sense at least one parameter, including but not limited to physiologic values and neural signals, which is indicative of at least one of disease state, magnitude of symptoms, and response to therapy; and

a stimulating and recording unit constructed and arranged to generate said neural modulation signal based upon a neural response sensed by said at least one sensor in response to a previously delivered neural modulation signal.

122. The system of claim 121, wherein said particular characteristic is indicative of at least one of a neurological and psychiatric condition.

123. The system of claim 121, wherein said stimulating and recording unit generates said neural modulation signal in accordance with predetermined treatment parameters to treat at least one of a neurological and psychiatric disease.

124. The system of claim 121, wherein said stimulating and recording unit comprises:

a signal processor constructed and arranged to determine neural system states; and

a control module for adjusting said at least one neural modulation signal based upon said neural system state.

125. The system of claim 121, wherein each of said at least one sensor generates one or more neural response signals, and wherein said stimulating and recording unit further comprises:

a signal conditioner, interposed between said at least one sensor and said signal processor, constructed and arranged to modify said neural response signals appropriately for said signal processor.

126. The system of claim 125, wherein said signal conditioner comprises:

at least one amplifier, each constructed and arranged to amplify said neural response signals generated by an associated one of said at least one sensor; and

at least one signal filter, each constructed and arranged to filter said amplified neural response signals generated by an associated one of said at least one sensor and an associated at least one amplifier.

127. The system of claim 126, wherein said at least one signal filter performs at least one of lowpass filtering, highpass filtering, bandpass filtering and notch filtering of said amplified neural response signal.

128. An apparatus for modulating the activity of at least one nervous system component, said system comprising:

means for delivering neural modulation signal to said nervous system component; and

means for sensing neural response to said neural modulation signal.

129. The apparatus of claim 128, wherein said delivery means comprises means for generating said neural modulation signal, said generating means comprising:

signal conditioning means for conditioning sensed neural response signals, said conditioning including but not limited to at least one of amplification, lowpass filtering, highpass filtering, bandpass filtering, notch filtering, root-mean square calculation, envelope determination, and rectification;

signal processing means for processing said conditioned sensed neural response signals to determine neural system states, including but not limited to a single or plurality of physiologic states and a single or plurality of disease states; and

controller means for adjusting neural modulation signal in response to sensed neural response to signal.

130. The apparatus of claim 129, wherein said activity is indicative of a neurologic and psychiatric disease.

131. The apparatus of claim 129, wherein said disease state includes but is not limited to Parkinson's disease, Huntington's disease, hemiballism, choreoathetosis, dystonia, akinesia, bradykinesia, restless legs syndrome, other movement disorder, epilepsy, Alzheimer's disease, dementia, other neurologic disorder, depression, mania, bipolar disorder, other affective disorder, anxiety disorder, phobia disorder, borderline personality disorder, schizophrenia, multiple personality disorder, and other psychiatric disorder.

132. The apparatus of claim 131, wherein said disease is a movement disorder.

133. The apparatus of claim 132, wherein said means for delivering neural modulation signal to said nervous system component includes electrodes implemented into at least one of the globus pallidus internus (GPi), including globus pallidus internus internal segment (GPi,i) and globus pallidus internus external segment (GPi,e), globus pallidus externus (GPe), ventral medial (Vim) thalamic nucleus, other portion of the thalamus, subthalamic nucleus (STN), caudate, putamen, other basal ganglia components, cingulate gyrus, other subcortical nuclei, nucleus locus ceruleus, pedunculopontine nuclei of the reticular formation, red nucleus, substantia nigra, other brainstem structure, cerebellum, internal capsule, external capsule, corticospinal tract, pyramidal tract, ansa lenticularis, white matter tracts, motor cortex, premotor cortex, supplementary motor cortex, other motor cortical regions, somatosensory cortex, other sensory cortical regions, Broca's area, Wernicke's area, other cortical regions, other central nervous system structure, other peripheral nervous system structure, other neural structure, sensory organs, muscle tissue, or other non-neural structure.

134. The apparatus of claim 132, wherein said means for sensing neural response includes but is not limited to at least one of measures of disease state and response to therapy.

135. The apparatus of claim 132, wherein said means for sensing neural response includes at least one of accelerometers electromyography electrodes, acoustic sensors, intracranial electrodes, electroencephalography electrodes, and peripheral nerve electrodes.

136. The apparatus of claim 132, wherein said means for sensing neural response includes a weighted aggregate of processed signals derived from at least one of accelerometers, electromyography electrodes, acoustic sensors, intracranial electrodes, electroencephalography electrodes, and peripheral nerve electrodes.

137. The apparatus of claim 131, wherein said controller means for generating a neural modulation signal employs a control law using as input signals derived from at least one of accelerometers, electromyography electrodes, acoustic sensors, intracranial electrodes, electroencephalography electrodes, and peripheral nerve electrodes.

138. The apparatus of claim 133, wherein said controller means for generating a neural modulation signal employs a control law using as input a weighted aggregate of professed signals derived from at least one of accelerometers, electromyography electrodes, acoustic sensors, intracranial electrodes, electroencephalography electrodes, and peripheral nerve electrodes.

139. A system for neural modulation in the treatment of disease, comprising:

(A) a sensor array in electronic communication with said signal conditioning circuit;

(B) a signal processor in electronic communication with said signal conditioning circuit

(C) a control circuit in electronic communication with said signal processor

(D) an output stage circuit in electronic communication with said control circuit

(E) a stimulating electrode array, in electronic communication with said output circuit

140. A system as in claim 139, further comprising a system enclosure implanted in the calvarium.

141. A system as in claim 139, further comprising a system enclosure with at least one convex surface.

142. A system as in claim 140, further comprising a system enclosure implanted in the calvarium with a calvarium stabilization lip.

143. A system as in claim 140, further comprising a system enclosure with attachment means for mechanical attachment to calvarium

144. A system as in claim 143, wherein said attachment means include at least one hole.

145. A system as in claim 143, wherein said attachment means include at least one threaded hole.

146. A system as in claim 143, wherein said attachment means include at least one hole positioned for placement of a suture through said hole.

147. A system as in claim 146, wherein said hole facilitates attachment of suture to periosteum.

148. A system as in claim 139, said stimulating electrode array mechanically attached to intracranial catheter.

149. A system as in claim 148, said intracranial catheter including at least one microelectrode.

150. A system for neural modulation in the treatment of disease, comprising:

(A) a system enclosure, in mechanical communication with calvarium;

(B) a control circuit in electronic communication with said signal processor

(C) an output stage circuit in electronic communication with said control circuit

(D) a stimulating electrode array, in electronic communication with said output circuit

151. A system as in claim 150, further comprising intracranial catheter, said stimulating electrode array mechanically attached to intracranial catheter.

152. A system as in claim 151, said intracranial catheter including at least one microelectrode.

153. A system as in claim 151, said intracranial catheter including at least one microelectrode tunnel.

154. A system as in claim 150, said system enclosure including at least one intracranial catheter port.

155. A system as in claim 154, said intracranial catheter port positioned at the center of said system enclosure.

156. A system as in claim 155, said intracranial catheter port positioned at the periphery of said system enclosure.

157. A system as in claim 150, said system enclosure including catheter recess.

158. A system as in claim 157, said catheter recess containing means for electrode contact between system enclosure and intracranial catheter

159. A system as in claim 150, further comprising catheter stabilization means.

160. A system as in claim 159, wherein said catheter stabilization means includes a catheter mount ball.

161. A system as in claim **160(31)**, wherein said catheter mount ball includes a catheter ball channel.

162. A system as in claim 159, wherein said catheter stabilization means includes a catheter insertion mount.

163. A system as in claim 162, wherein said catheter insertion mount includes catheter mount system enclosure attachment means.

164. A system as in claim 162, wherein said system enclosure includes system enclosure catheter mount attachment means.

165. A system as in claim 159, wherein said catheter stabilization means includes a catheter locking mechanism.

166. A system as in claim 165, wherein said catheter locking mechanism includes a compressible material.

167. A system as in claim 166, wherein said compressible material is compressed against intracranial catheter.

168. A system as in claim 165, wherein said catheter locking mechanism includes a catheter mount ball locking screw.

169. A system as in claim 168, wherein said catheter mount ball locking screw provides force to compress said catheter locking mechanism.

170. A system as in claim 150, further comprising at least one electrode contact.

171. A system as in claim 170, wherein said electrode contact is in mechanical connection to said system enclosure.

172. A system as in claim 170, wherein said electrode contact is contained within catheter recess.

173. An intracranial catheter for use in the treatment of disease, comprising at least one stimulating electrode and at least one microelectrode.

174. An intracranial catheter as in claim 173, wherein said microelectrode is attached to a microelectrode shaft which is positioned along the longitudinal axis of said intracranial catheter.

175. An intracranial catheter as in claim 173, wherein said microelectrode is attached to a microelectrode shaft which is parallel to the longitudinal axis of said intracranial catheter.

176. An intracranial catheter as in claim 173, wherein said microelectrode is removable.

177. A system as in claim 150, further comprising intracranial catheter

178. A system as in claim 150, further comprising a multiplicity of intracranial catheter

179. A system as in claim 150, further comprising a multiplicity of intracranial catheter, elements of said stimulating electrode array mechanically attached to at least one of intracranial catheter.

180. A system as in claim 150, further comprising at least one microelectrode attached to at least one of intracranial catheter.

181. A system as in claim 151, said stimulating electrode array comprising a conducting film mechanically attached to intracranial catheter.

182. A system as in claim 151, said stimulating electrode array comprising a conducting layer deposited on intracranial catheter.

183. A system as in claim 152, said conducting film deposited using microfabrication process, including but not limited to electron beam deposition, sputtering, plasma enhanced chemical vapor deposition.

184. A device for neuromodulation, comprising

a. electronic circuit

b. enclosure [casing] means for enclosing said electronic circuit

c. securing means for securing said casing to calvarium

d. electrode means for delivering electrical stimulus to tissue

185. A device for neuromodulation, comprising

a. electronic circuit

b. enclosure [casing] means for enclosing said electronic circuit in close proximity to the calvarium

c. electrode means for delivering electrical stimulus to tissue

186. A device for neuromodulation, comprising

a. electronic circuit

b. enclosure [casing] means for enclosing said electronic circuit within a region from which bone was removed from the calvarium

c. electrode means for delivering electrical stimulus to tissue

187. A device as in claim 184 wherein said device is cylindrical.

188. A device as in claim 185 wherein said device has a diameter less than 6 centimeters.

189. A device as in claim 186 wherein said device has a diameter less than 5 centimeters.

190. A device as in claim 184 wherein said device has a diameter less than 4 centimeters.

191. A device as in claim 185 wherein said device has a diameter less than 3 centimeters.

192. A device as in claim 186 wherein said device has a diameter less than 2 centimeters.

193. A device as in claim 184 wherein said device has a diameter less than 1 centimeters.

* * * * *