US008302754B2

(12) **United States Patent**
Yagi et al.

(10) **Patent No.: US 8,302,754 B2**
(45) **Date of Patent: Nov. 6, 2012**

(54) **TAPERED COUPLING STRUCTURE AND ROTATING MACHINE**

(75) Inventors: **Katsuki Yagi**, Hiroshima (JP); **Hiroki Terado**, Hiroshima (JP); **Eiichi Yanagisawa**, Hiroshima (JP); **Hitoshi Shinohara**, Hiroshima (JP)

(73) Assignee: **Mitsubishi Heavy Industries, Ltd.**, Tokyo (JP)

(*) Notice: Subject to any disclaimer, the term of this patent is extended or adjusted under 35 U.S.C. 154(b) by 680 days.

(21) Appl. No.: **12/507,883**

(22) Filed: **Jul. 23, 2009**

(65) **Prior Publication Data**

US 2010/0200354 A1 Aug. 12, 2010

(30) **Foreign Application Priority Data**

Feb. 12, 2009 (JP) 2009-030180

(51) **Int. Cl.**
F16D 11/04 (2006.01)
F16D 1/092 (2006.01)
B23P 11/02 (2006.01)

(52) **U.S. Cl.** **192/66.2**; 192/85.21; 192/101; 403/15

(58) **Field of Classification Search** 192/66.2, 192/101, 65; 403/31, 36, 15
See application file for complete search history.

(56) **References Cited**

U.S. PATENT DOCUMENTS

2,840,399 A * 6/1958 Harless et al. 403/15
3,228,102 A * 1/1966 Sillett 29/252
3,865,497 A * 2/1975 Bratt et al. 403/15
3,937,103 A * 2/1976 Kleinhans 403/15
4,375,926 A * 3/1983 Feller 403/31
7,837,406 B2 * 11/2010 Landwehr 403/31

FOREIGN PATENT DOCUMENTS

DE	196 35 542	3/1998
FR	2217848	9/1974
GB	969895	9/1964
JP	49-96161	9/1974
JP	53-10067	1/1978
JP	54-28959	3/1979
JP	55-40283	3/1980

(Continued)

OTHER PUBLICATIONS

Japanese Office Action issued Nov. 17, 2010 in corresponding Japanese Patent Application No. 2009-030180 with English Translation.

(Continued)

Primary Examiner — David D Le
Assistant Examiner — Jacob S Scott
(74) *Attorney, Agent, or Firm* — Wenderoth, Lind & Ponack, L.L.P.

(57) **ABSTRACT**

A tapered coupling structure allows a tapered shaft to be coupled to and decoupled from a hub without the use of an 0-ring. The tapered shaft is provided with a taper part on the side that is coupled to the hub, and the hub is provided with a high-rigidity part having a thickness in the radial direction larger than that of other regions and having a high rigidity in the radial direction. An oil groove formed in the outer peripheral surface of the taper part to feed oil to the coupling surfaces of the taper part and the hub is provided in a region corresponding to the high-rigidity part in the axial direction.

4 Claims, 7 Drawing Sheets

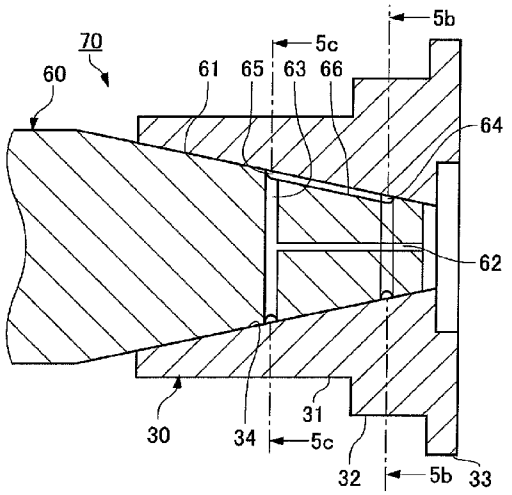

CMS Cepcor Exhibit 1051
CMS Cepcor v. Sandvik IPR2024-01380

FOREIGN PATENT DOCUMENTS

JP	58-160027	9/1983
JP	58-153720	10/1983
JP	61-203227	9/1986
JP	5-296252	11/1993
JP	3054261	9/1998
JP	2001-247093	9/2001
JP	2008-25596	2/2008

OTHER PUBLICATIONS

Japanese Office Action issued Feb. 9, 2011 in corresponding Japanese Patent Application No. 2009-030180 w/English translation.
European Search Report issued Feb. 9, 2011 in corresponding European Patent Application No. 09165402.0.

* cited by examiner

FIG. 1A

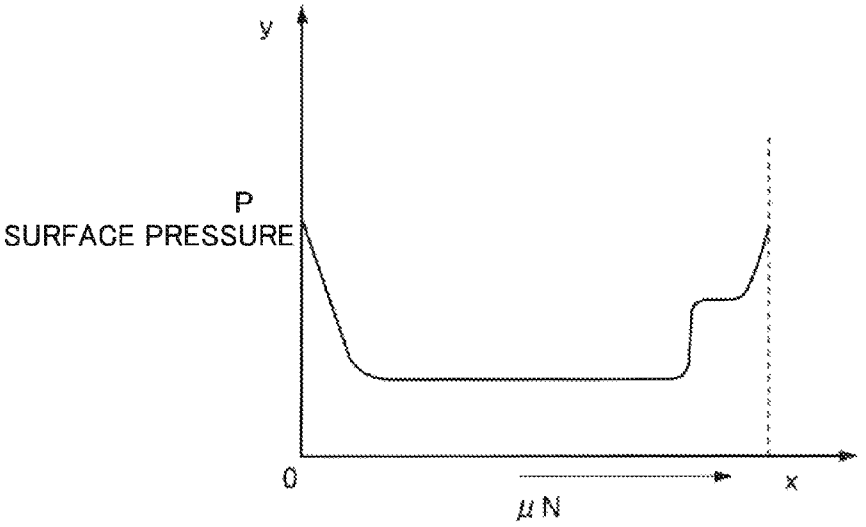

FIG. 1B

PRIOR ART

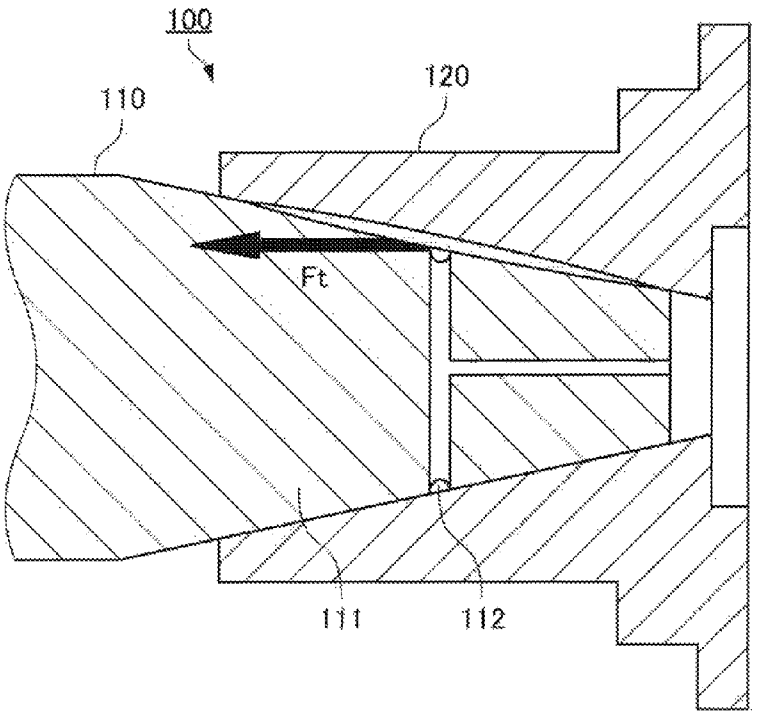

CMS Cepcor Exhibit 1051
CMS Cepcor v. Sandvik IPR2024-01380

FIG. 2A PRIOR ART

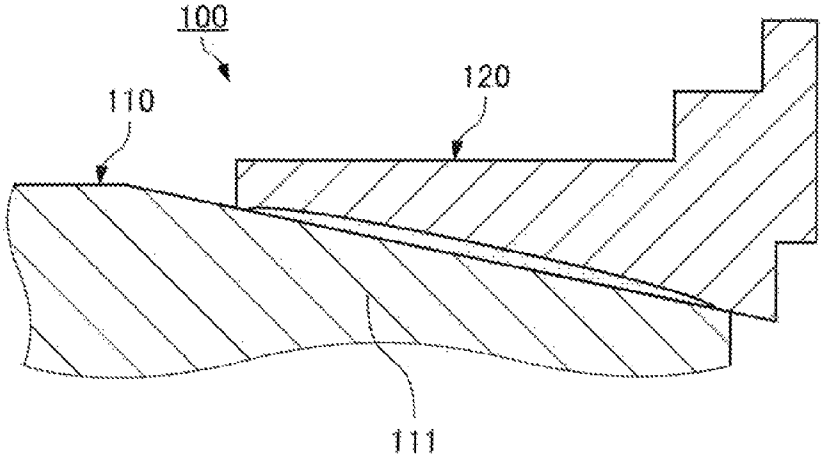

FIG. 2B

PRIOR ART

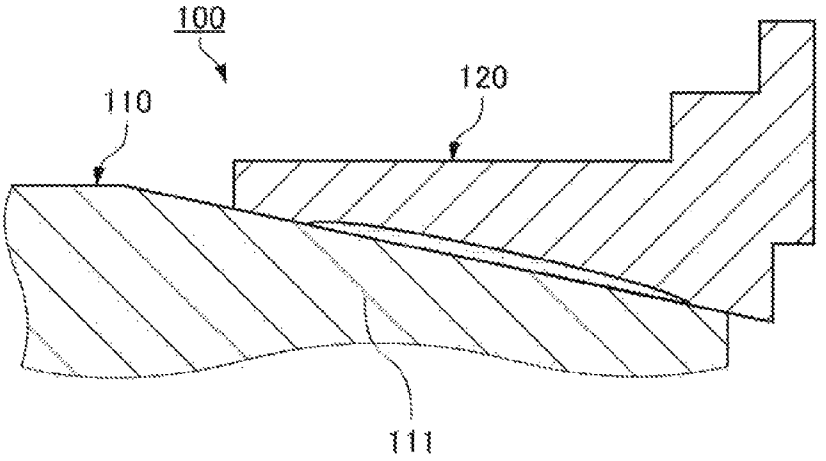

FIG. 3A

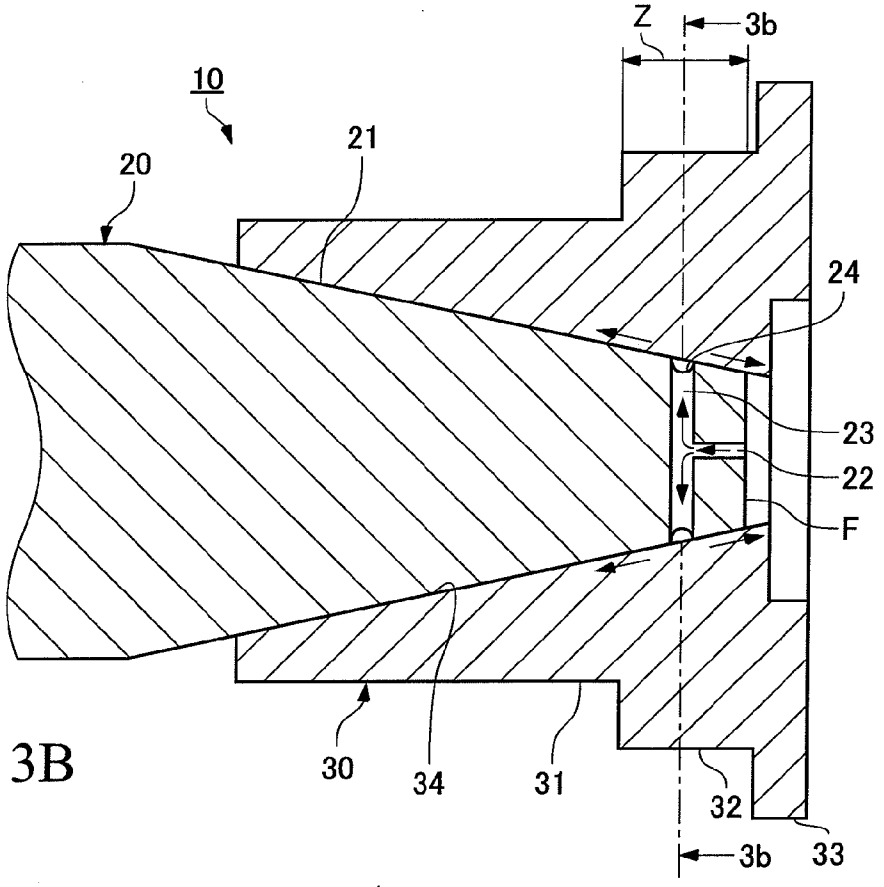

FIG. 3B

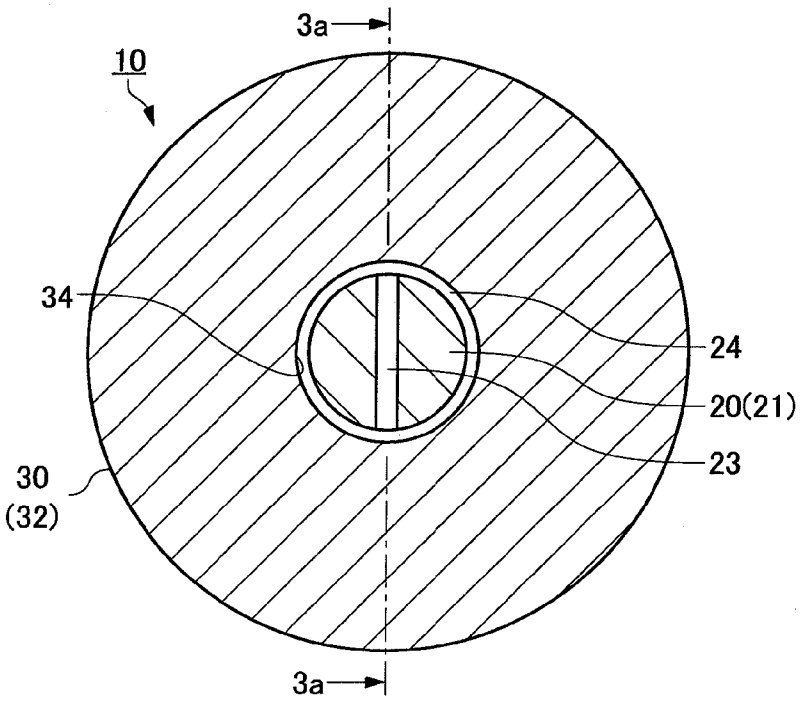

CMS Cepcor Exhibit 1051
CMS Cepcor v. Sandvik IPR2024-01380

FIG. 4

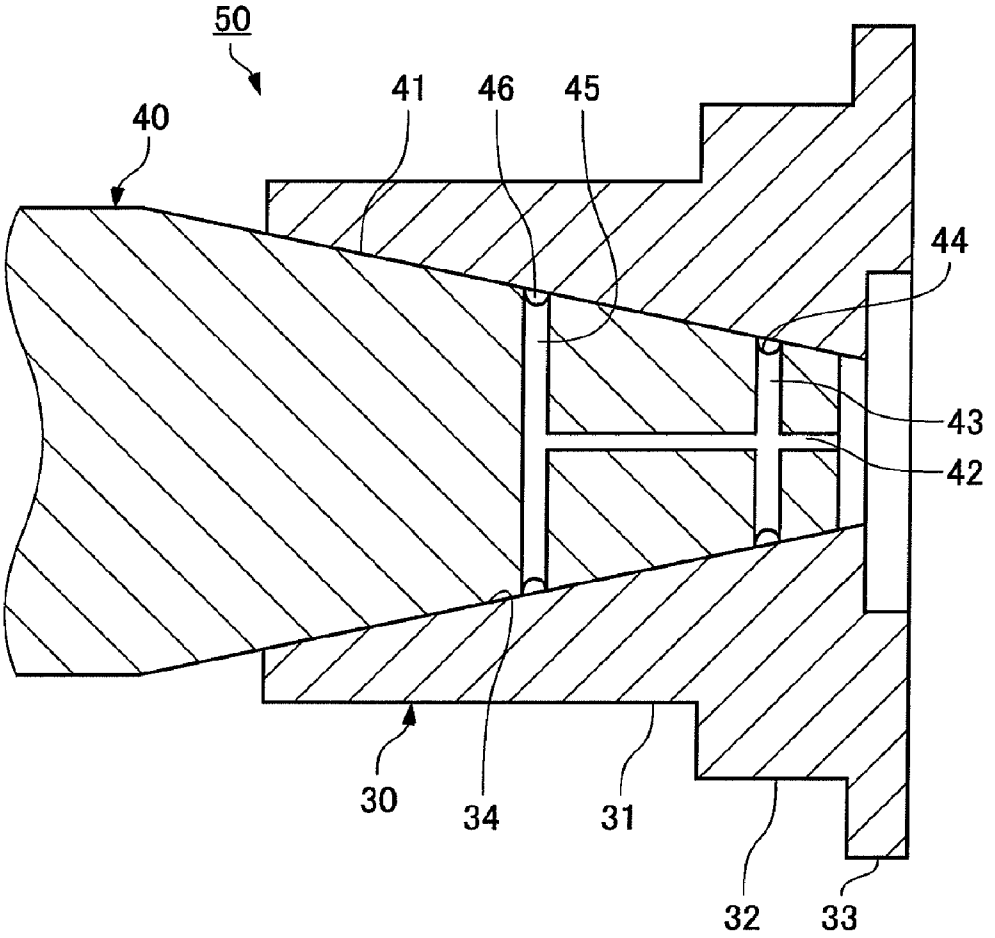

CMS Cepcor Exhibit 1051
CMS Cepcor v. Sandvik IPR2024-01380

FIG. 5A

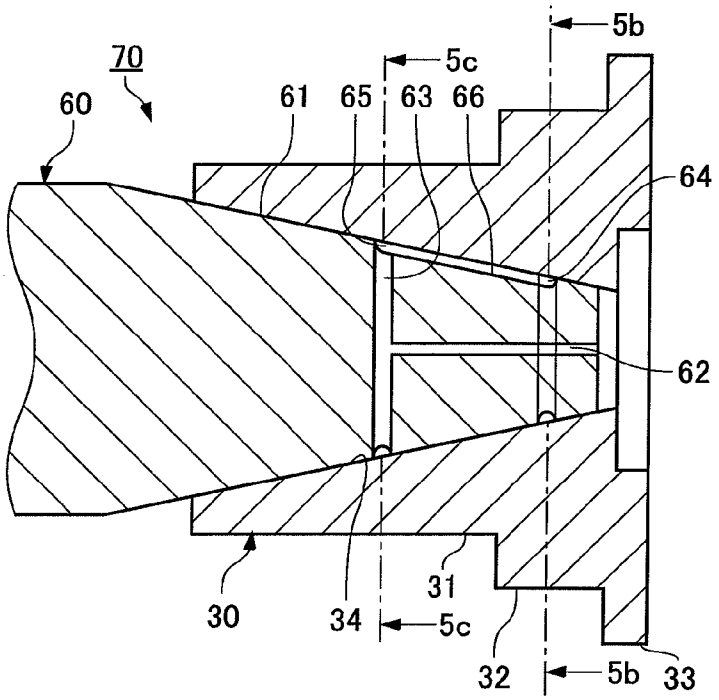

FIG. 5B

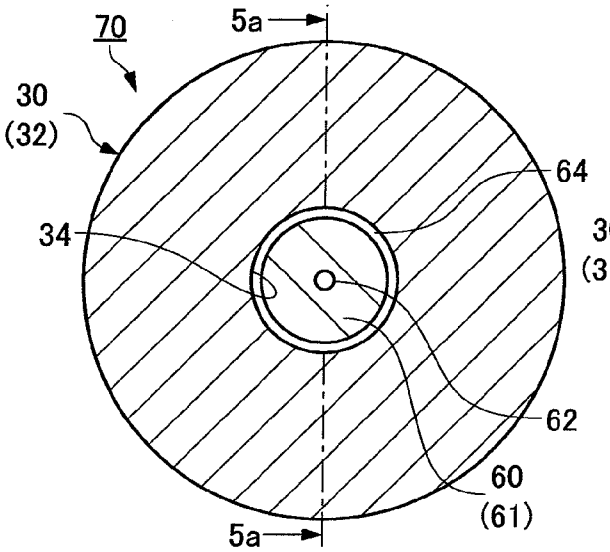

FIG. 5C

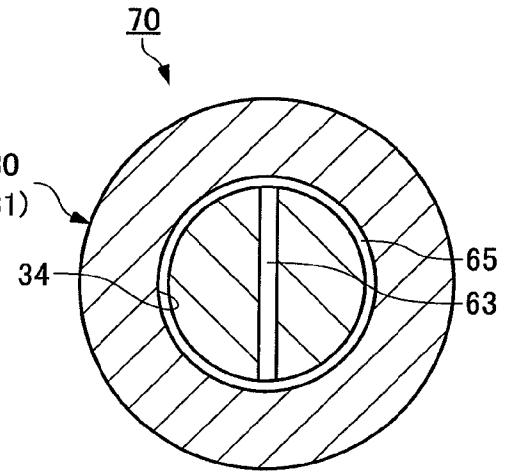

CMS Cepcor Exhibit 1051
CMS Cepcor v. Sandvik IPR2024-01380

FIG. 6A

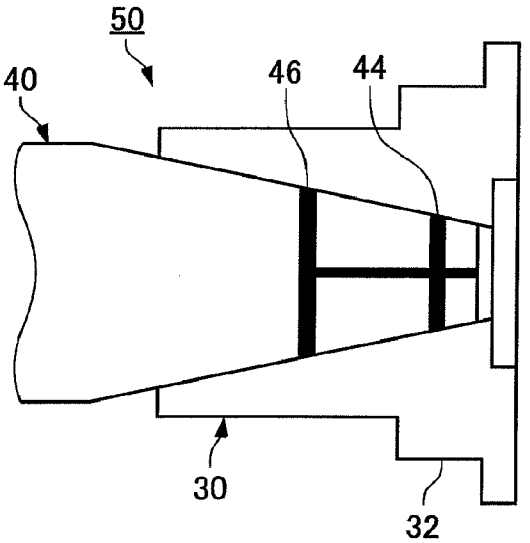

FIG. 6B

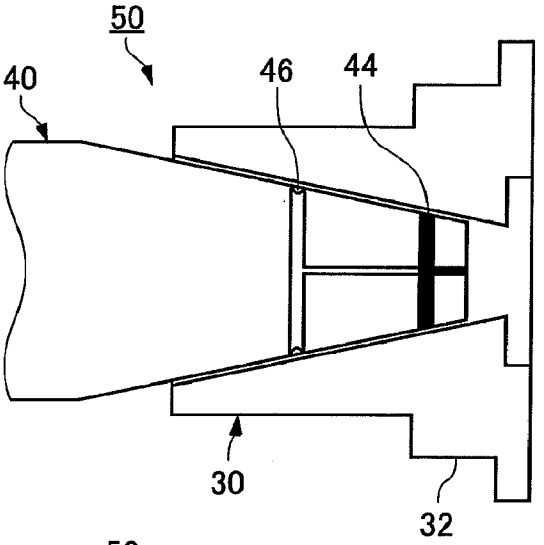

FIG. 6C

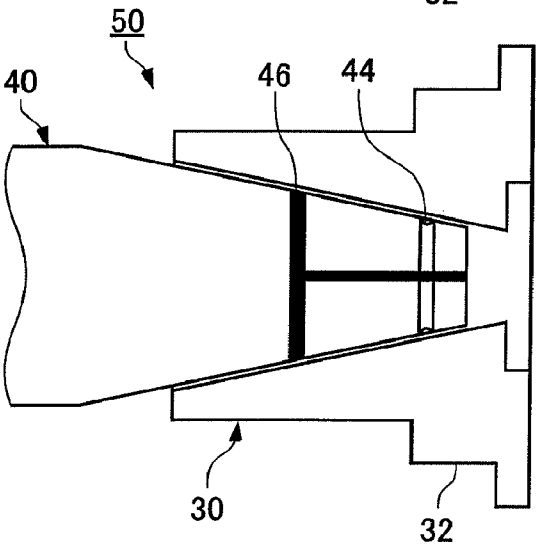

CMS Cepcor Exhibit 1051
CMS Cepcor v. Sandvik IPR2024-01380

FIG. 7

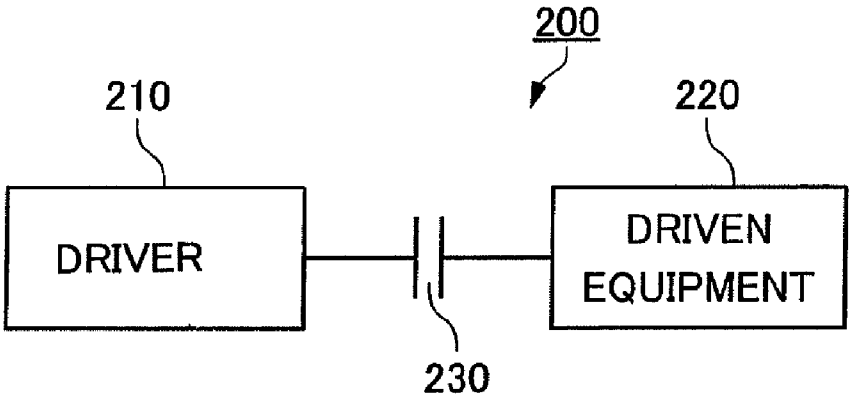

CMS Cepcor Exhibit 1051
CMS Cepcor v. Sandvik IPR2024-01380

TAPERED COUPLING STRUCTURE AND ROTATING MACHINE

BACKGROUND OF THE INVENTION

1. Field of the Invention

The present invention relates to a tapered coupling structure in which a shaft provided with a taper-shaped outer periphery and a hub provided with a taper-shaped inner periphery are coupled to each other.

2. Description of the Related Art

As a machine element for transmitting the output of a driver to driven equipment, a coupling has been known. Among various types of couplings, there has been known a coupling in which an output shaft of driver provided with a taper-shaped outer periphery in the shaft end portion thereof (hereinafter, referred to as a tapered shaft) and a hub into which the shaft end portion is inserted and which has a hollow part provided with a taper-shaped inner periphery are coupled to each other. This coupling structure is used to transmit high output, for example, to transmit the output of a steam turbine to a compressor, or to transmit engine power to a propeller shaft. In some cases, the hub is provided on the driver side, and the tapered shaft is provided on the driven equipment side.

In the tapered coupling structure (hereinafter, sometimes referred to simply as a coupling structure), when the tapered shaft is coupled to the hub, or when the tapered shaft is decoupled from the hub, oil is fed to the coupling surfaces of the tapered shaft and the hub to increase the diameter of the hub, by which coupling and decoupling are enabled. For this purpose, the coupling structure is configured so that an oil passage is provided in the tapered shaft (or the hub), and an oil groove connecting with the oil passage is provided in the outer peripheral surface of the tapered shaft (or the inner peripheral surface of the hub) to feed oil to the coupling surfaces via the oil passage and oil groove.

Coupling and decoupling of the coupling structure can also be performed by heating and thermally expanding the hub besides the use of hydraulic pressure. However, the work for heating the hub is not easy to perform in the case where the hub is large. Also, the heating of hub may produce thermal deformation of the hub. In this case, it is difficult to reuse the hub as it is as a rotating body.

Therefore, in the coupling structure, coupling and decoupling are performed with hydraulic pressure in most cases.

As described in Japanese Registered Utility Model No. 3054261, the coupling structure in which coupling and decoupling are performed by hydraulic pressure has a problem in that oil scatters from the oil groove, and contaminates the surroundings. Japanese Registered Utility Model No. 3054261 proposes that a fine groove (the depth is 5/100 mm or less) is formed in the inner peripheral surface of the hub. According to Japanese Registered Utility Model No. 3054261, due to the formation of the fine groove, since oil as a complete fluid does not exist on the inner peripheral surface of the hub, even if the tapered shaft is removed and the oil is thereby exposed to the air, the oil does not scatter fluidly and maintains a state of adhering still to the surface layer portion.

The problem of oil scattering can be solved by the proposal of Japanese Registered Utility Model No. 3054261 and further by the kind of oil used. However, with regard to the coupling structure, a problem described below has been brought forward.

To facilitate coupling and decoupling using hydraulic pressure, conventionally, a technique in which an O-ring is interposed between the tapered shaft and the hub has often been

adopted. In this technique, a pair of O-rings is disposed at a predetermined interval in the axial direction, and an oil groove is provided between the paired O-rings. By doing this, the oil fed via the oil passage and oil groove is accumulated in a closed space formed by the tapered shaft, the hub, and the paired O-rings, so that a hydraulic pressure for increasing the diameter of hub can be obtained easily.

However, a demand for avoidance of the use of O-rings has arisen. The reason for this is that it is supposed that if the O-ring is broken during the use of the coupling structure, decoupling of the tapered shaft from the hub may become difficult to do.

In the coupling structure without the use of O-rings, the fed oil is liable to leak from the end part of the structure, so that a hydraulic pressure necessary for coupling or decoupling is difficult to obtain. If coupling or decoupling is performed forcedly in this state, scratches occur on the outer peripheral surface of the tapered shaft and the inner peripheral surface of the hub.

SUMMARY OF THE INVENTION

The present invention has been accomplished to solve the above-described technical problems, and accordingly an object thereof is to provide a tapered coupling structure in which a tapered shaft can be coupled to and decoupled from a hub without the use of an O-ring.

Conditions for decoupling a tapered shaft **110** from a hub **120** in a coupling structure **100** are explained with reference to FIGS. **1**A and **1**B.

In the coupling structure **100**, in the state in which the tapered shaft **110** is coupled to the hub **120**, the tapered shaft **100** is subjected to a pressure (surface pressure) P by the hub **120** as shown in FIG. **1**A.

When oil is fed to between the tapered shaft **110** and the hub **120** to decouple the tapered shaft **110** from the hub **120**, a force Ft directed in the direction indicated by the arrow mark in FIG. **1**B acts on the tapered shaft **110**. On the other hand, between the tapered shaft **110** and the hub **120**, a frictional resistance μN directed in the opposite direction to Ft acts. When Ft exceeds μN, the tapered shaft **110** can be decoupled from the hub **120**. The letter μ denotes the coefficient of dynamic friction, and the letter N denotes the load based on the surface pressure P.

Conventionally, to feed oil to between the tapered shaft **110** and the hub **120**, an oil groove **112** provided in the outer peripheral surface of the tapered shaft **110** (or the inner peripheral surface of the hub **120**) has been arranged in the center (or in the vicinity of the center) in the axial direction of a taper part **111** of the tapered shaft **110**. This is because the oil permeates in a wide range in the axial direction of the taper part **111**. By the pressure of the fed oil O, as shown in FIGS. **2**A and **2**B, the inner peripheral surface of the hub **120** is curved into a concave shape. When the inside diameter of the hub **120** is increased in this manner, the contact area between the taper part **111** and the hub **120** decreases, and accordingly the frictional resistance μN decreases. That is to say, when the contact area between the taper part **111** and the hub **120** is small as shown in FIG. **2**A, decoupling is easy to perform, and when the contact area between the taper part **111** and the hub **120** is large as shown in FIG. **2**B, decoupling is difficult to perform.

As shown in FIG. **1**A, the surface pressure P increases in a portion in which the thickness in the radial direction of the hub **120** is large, that is, as the rigidity in the radial direction

increases. Therefore, in order to remove the tapered shaft **110**, the hydraulic pressure acting in this portion must be increased. However, if the oil groove **112** is arranged in the center (or in the vicinity of the center) in the axial direction of the taper part **111** of the tapered shaft **110**, the distance to this portion is long, so that the hydraulic pressure acting on this portion is low.

As described above, in the conventional coupling structure **100**, the position at which the oil groove **112** is provided has been unsuitable to the shape of the hub **120**.

Accordingly, the present invention provides a tapered coupling structure in which a tapered shaft and a hub are coupled to each other, the tapered shaft being provided with a taper part on the side of being coupled to the hub; and the hub being provided with a high-rigidity part having a thickness in the radial direction larger than that of other regions and having a high rigidity in the radial direction, wherein a first oil groove formed in the outer peripheral surface of the taper part or in the inner peripheral surface of the hub to feed oil to the coupling surfaces of the taper part and the hub is provided in a first region corresponding to the high-rigidity part in the axial direction.

In the present invention, the high-rigidity part is preferably arranged on the front end side of the coupling part of the taper part and the hub. In this case, the first oil groove is preferably arranged on the rear end side of the center of width in the axial direction of the high-rigidity part.

Also, in the present invention, a second oil groove can be formed in a second region different from the first region.

The tapered coupling structure in accordance with the present invention is used as a coupling structure in a rotating machine comprising a driver for delivering a rotational force; driven equipment rotationally driven by the output of the driver; and the coupling structure for transmitting the output of the driver to the driven equipment.

The tapered coupling structure in accordance with the present invention can feed oil preferentially to a region having a high surface pressure because the first oil groove for feeding the oil to the coupling surfaces of the taper part and the hub is provided in the first region corresponding to the high-rigidity part in the axial direction. As a result, there can be provided the tapered coupling structure in which the tapered shaft can be coupled to and decoupled from the hub without the use of an O-ring.

BRIEF DESCRIPTION OF THE DRAWINGS

FIGS. **1**A and **1**B are diagrams for explaining a force acting on a tapered coupling structure;

FIGS. **2**A and **2**B are sectional views showing a state in which oil is fed to coupling surfaces of a tapered shaft and a hub of a tapered coupling structure;

FIGS. **3**A and **3**B are sectional views of a tapered coupling structure in accordance with a first embodiment;

FIG. **4** is a sectional view of a tapered coupling structure in accordance with a second embodiment;

FIGS. **5**A, **5**B and **5**C are sectional views of a tapered coupling structure in accordance with a third embodiment;

FIGS. **6**A, **6**B and **6**C are sectional views showing a decoupling procedure for a tapered coupling structure in accordance with a second embodiment; and

FIG. **7** is a diagram showing a general configuration of a rotating machine for which a tapered coupling structure is used.

DETAILED DESCRIPTION OF THE INVENTION

First Embodiment

The present invention will now be described in detail based on a first embodiment shown in the accompanying drawing.

FIGS. **3**A and **3**B are sectional views of a coupling structure **10** in accordance with the first embodiment, FIG. **3**A being a sectional view taken along the line **3***a*-**3***a* of FIG. **3**B, and FIG. **3**B being a sectional view taken along the line **3***b*-**3***b* of FIG. **3**A.

The coupling structure **10** is made up of a tapered shaft **20** and a hub **30** coupled to the tapered shaft **20**. The tapered shaft **20** constitutes, for example, the output shaft of a steam turbine, not shown. The hub **30** is connected to, for example, the input shaft of a compressor, not shown, and functions as an element for transmitting the output of the steam turbine to the compressor.

The tapered shaft **20** includes a taper part **21** the diameter of which decreases toward the tip end. In the present invention, the tip end side of the tapered shaft **20** is defined as the front, and the opposite side thereto as the rear.

An axial oil passage **22** is formed along the axial direction of the tapered shaft **20** from a front end surface F of the taper part **21**. Also, a radial oil passage **23** is formed in the radial direction of the taper part **21**. The radial oil passage **23** communicates with the axial oil passage **22**, and both ends thereof are open to the outer peripheral surface of the taper part **21**. Therefore, oil fed from a hydraulic pressure source, not shown, flows along the axial direction in the axial oil passage **22** that is open to the front end surface F of the taper part **21**, and then flows to the outer periphery side in the radial direction along the radial oil passage **23** as indicated by arrow marks. Thereafter, the oil flows out to the coupling surfaces of the taper part **21** and the hub **30**.

At a position at which the radial oil passage **23** is open on the outer peripheral surface of the taper part **21**, an oil groove **24** is formed along the circumferential direction of the taper part **21**. The oil flowing out of the opening of the radial oil passage **23** flows in the oil groove **24**, by which the oil is permeated in the circumferential direction of the outer peripheral surface of the taper part **21**. When oil is fed even after the oil groove **24** has been filled with oil, the oil is permeated toward the axial direction onto the coupling surfaces of the taper part **21** and the hub **30**.

The hub **30** includes a base part **31** having a hollow part through which the taper part **21** of the tapered shaft **20** penetrates, a high-rigidity part **32** having an outside diameter larger than that of the base part **31**, and a flange part **33** located on the front end side of the high-rigidity part **32**. The flange part **33** is connected, with bolts or other fastening means, to a structural member that is subjected to a transmitted force. The high-rigidity part **32** is a part that is continuous with the flange part **33** and is subjected to a high torsional stress, so that the wall thickness thereof in the radial direction is set large. Therefore, the high-rigidity part **32** is arranged on the front end side. Since the high-rigidity part **32** has a wall thickness in the radial direction larger than that of the base part **31**, the surface pressure P of the taper part **21** received from the high-rigidity part **32** is higher than the surface pressure P of the taper part **21** received from the base part **31** as shown in FIG. **1**A.

The hollow part of the hub **30** penetrates in the axial direction, and there is formed a taper part accommodating part **34** the diameter of which decreases continuously toward the front end from the rear end thereof.

CMS Cepcor Exhibit 1051
CMS Cepcor v. Sandvik IPR2024-01380

As shown in FIG. **3**A, in the tapered coupling structure **10** in which the tapered shaft **20** and the hub **30** are coupled to each other at a normal position, the oil groove **24** is provided in a region (a first region) corresponding to the high-rigidity part **32** of the hub **30**. More specifically, the oil groove **24** is formed in the range in the axial direction in which the tapered shaft **20** and the hub **30** are coupled to each other and in the range in which the high-rigidity part **32** is located (in the range indicated by Z in FIG. **3**A).

In the tapered coupling structure **10**, the oil groove **24** is provided at a position corresponding to the high-rigidity part **32** of the hub **30**. As described above, the surface pressure P of the taper part **21** received from the high-rigidity part **32** is high. However, since the oil groove **24** is provided at a position corresponding to the high-rigidity part **32**, the hydraulic pressure acting on the hub **30** against the surface pressure is higher than the hydraulic pressure on the surroundings. Therefore, the tapered shaft **20** can be coupled to or decoupled from the hub **30** without the provision of an O-ring.

In the case of the tapered coupling structure **10**, the high-rigidity part **32** is arranged on the front end side. In this case, if the position at which the oil groove **24** is provided is too close to the front end surface F of the tapered shaft **20** even if corresponding to the high-rigidity part **32** of the hub **30** (being in the range indicated by Z in FIG. **3**A), the fed oil may leak to the outside without acting. In this case, therefore, the oil groove **24** is preferably provided at a position corresponding to the high-rigidity part **32** and moreover on the rear end side of the center in the axial direction of the high-rigidity part **32**. Needless to say, this consideration is unnecessary in the case where the high-rigidity part **32** is arranged at a position other than the position near the front end.

Second Embodiment

FIG. **4** is a sectional view of a coupling structure **50** in accordance with a second embodiment.

The coupling structure **50** comprises a tapered shaft **40** and the hub **30** coupled to the tapered shaft **40**. The hub **30** is the same as that of the first embodiment, and therefore the explanation thereof is omitted.

The tapered shaft **40** includes a taper part **41**, and an axial oil passage **42** is formed along the axial direction of the tapered shaft **40** from the front end surface of the taper part **41**. Also, in the radial direction of the taper part **41**, a first radial oil passage **43** and a second radial oil passage **45**, which is provided at a predetermined interval from the first radial oil passage **43**, are formed. The first radial oil passage **43** communicates with the axial oil passage **42**, and both ends thereof are open to the outer peripheral surface of the taper part **41**. The second radial oil passage **45** communicates with the terminal end of the axial oil passage **42**, and both ends thereof are open to the outer peripheral surface of the taper part **41**. Therefore, oil fed from a hydraulic pressure source, not shown, flows in the axial oil passage **42** and the first radial oil passage **43** in order, and flows out to the outer peripheral surface of the taper part **41**. Also, the oil flows in the axial oil passage **42** and the second radial oil passage **45** in order, and flows out to the outer peripheral surface of the taper part **41**.

At a position at which the first radial oil passage **43** is open on the outer peripheral surface of the taper part **41**, a first oil groove **44** is formed along the circumferential direction of the taper part **41**. The oil flowing out of the opening of the first radial oil passage **43** flows in the first oil groove **44**, by which the oil is permeated in the circumferential direction of the outer peripheral surface of the taper part **41**. Also, at a position at which the second radial oil passage **45** is open on the outer peripheral surface of the taper part **41**, a second oil groove **46** is formed along the circumferential direction of the taper part **41**. The oil flowing out of the opening of the second radial oil passage **45** flows in the second oil groove **46**, by which the oil is permeated in the circumferential direction of the outer peripheral surface of the taper part **41**. When the first oil groove **44** and the second oil groove **46** are filled with oil, the oil is permeated along the axial direction onto the coupling surfaces of the taper part **41** and the hub **30**.

As shown in FIG. **4**, in the tapered coupling structure **50** in which the tapered shaft **40** and the hub **30** are coupled to each other at a normal position, the first oil groove **44** is provided in a region (a first region) corresponding to the high-rigidity part **32** of the hub **30**. Also, the second oil groove **46** is provided in a region (a second region) corresponding to the base part **31** of the hub **30**.

In the tapered coupling structure **50**, since the first oil groove **44** is provided in the region corresponding to the high-rigidity part **32** of the hub **30**, the hydraulic pressure acting on the hub **30** against the surface pressure of the taper part **41** received from the high-rigidity part **32** is high.

Furthermore, in the tapered coupling structure **50**, the second oil groove **46** is provided in the region corresponding to the base part **31** of the hub **30**. Therefore, the oil can be permeated easily into a large region of the coupling surfaces in the axial direction of the tapered shaft **40** and the hub **30**, so that the tapered shaft **40** can be coupled to or decoupled from the hub **30** more easily than in the first embodiment.

Third Embodiment

FIGS. **5**A, **5**B and **5**C are sectional views of a coupling structure **70** in accordance with the third embodiment, FIG. **5**A being a sectional view taken along the line **5***a*-**5***a* of FIG. **5**B, FIG. **5**B being a sectional view taken along the line **5***b*-**5***b* of FIG. **5**A, and FIG. **5**C being a sectional view taken along the line **5***c*-**5***c* of FIG. **5**A.

The coupling structure **70** comprises a tapered shaft **60** and the hub **30** coupled to the tapered shaft **60**. The hub **30** is the same as that of the first embodiment, and therefore the explanation thereof is omitted.

The tapered shaft **60** comprises a taper part **61**, and an axial oil passage **62** is formed along the axial direction of the tapered shaft **60** from the front end surface of the taper part **61**. Also, in the radial direction of the taper part **61**, a radial oil passage **63** is formed. The radial oil passage **63** communicates with the terminal end of the axial oil passage **62**, and both ends thereof are open to the outer peripheral surface of the taper part **61**. Therefore, oil fed from a hydraulic pressure source, not shown, flows in the axial oil passage **62** and the radial oil passage **63** in order, and flows out to the outer peripheral surface of the taper part **61**.

At a position at which the radial oil passage **63** is open on the outer peripheral surface of the taper part **61**, a second oil groove **65** is formed along the circumferential direction of the taper part **61**. The oil flowing out of the opening of the radial oil passage **63** flows in the second oil groove **65**, by which the oil is permeated in the circumferential direction of the outer peripheral surface of the taper part **61**.

In the outer peripheral surface of the taper part **61**, there is provided a connecting oil groove **66** one end of which communicates with the second oil groove **65** and which extends in the axial direction toward the front end of the tapered shaft **60**. The other end of the connecting oil groove **66** communicates with a first oil groove **64**. The first oil groove **64** is formed along the circumferential direction in the outer peripheral surface of the taper part **61**. Some of the oil flowing in the second oil groove **65** passes through the connecting oil groove **66** and reaches the first oil groove **64**. This oil flows in

the first oil groove **64**, by which the oil is permeated in the circumferential direction of the outer peripheral surface of the taper part **61**.

In the tapered coupling structure **70** in which the tapered shaft **60** and the hub **30** are coupled to each other at a normal position, the first oil groove **64** is provided in a region corresponding to the high-rigidity part **32** of the hub **30**. Also, the second oil groove **65** is provided in a region corresponding to the base part **31** of the hub **30**.

In the tapered coupling structure **70**, since the first oil groove **64** is provided in the region corresponding to the high-rigidity part **32** of the hub **30**, the hydraulic pressure acting on the hub **30** against the surface pressure of the taper part **61** received from the high-rigidity part **32** is high.

Furthermore, in the tapered coupling structure **70**, the second oil groove **65** is provided in the region corresponding to the base part **31** of the hub **30**. Therefore, the oil can be permeated easily into a large region of the coupling surfaces in the axial direction of the tapered shaft **60** and the hub **30**, so that the tapered shaft **60** can be decoupled from the hub **30** more easily than in the first embodiment.

Also, the feed of oil from the second oil groove **65** to the first oil groove **64** is accomplished via the connecting oil groove **66**. This connecting oil groove **66** can be machined easily as compared with the first radial oil passage **43** in the second embodiment.

Fourth Embodiment

Regarding the coupling structure **50** shown as the second embodiment, a preferred procedure for decoupling the tapered shaft **40** from the hub **30** is explained with reference to FIGS. **6**A, **6**B and **6**C.

The coupling structure **50** comprises the first oil groove **44** and the second oil groove **46**. When the tapered shaft **40** is decoupled from the hub **30**, oil can be fed from both of the first oil groove **44** and the second oil groove **46** from beginning to end of the decoupling, and also the feed of oil from the first oil groove **44** or the second oil groove **46** can be stopped depending on the stage of decoupling.

As shown in FIG. **6**A, at the decoupling start time, since the surface pressure P received from the hub **30** by the tapered shaft **40** is the highest, oil is fed from both of the first oil groove **44** and the second oil groove **46**. By doing this, the tapered shaft **40** and the hub **30** are moved relatively in the decoupling direction. In FIGS. **6**A, **6**B and **6**C, the region to which oil is fed is painted over in black.

Next, as shown in FIG. **6**B, the feed of oil from the second oil groove **46** is stopped, and oil is fed from the first oil groove **44** only. After oil has been fed from both of the first oil groove **44** and the second oil groove **46**, decoupling can be performed relatively easily. However, to the region corresponding to the high-rigidity part **32**, oil is fed from the first oil groove **44** because the surface pressure P thereof is high.

Next, as shown in FIG. **6**C, the feed of oil from the first oil groove **44** is stopped, and the feed of oil from the second oil groove **46** is restarted. As the tapered shaft **40** and the hub **30** move relatively in the decoupling direction, the surface pressure P from the high-rigidity part **32** decreases. Therefore, to give priority to the permeation of oil in the axial direction as far as possible, oil is fed from the second oil groove **46**.

The changeover timing from FIG. **6**A to FIG. **6**B and the changeover timing from FIG. **6**B to FIG. **6**C can be set appropriately based on the shapes, sizes, and the like of the tapered shaft **40** and the hub **30**.

In the above description, a procedure consisting of the feed from both of the first oil groove **44** and the second oil groove **46**, the feed from the first oil groove **44** only, and the feed from the second oil groove **46** has been used. However, a different procedure may be used depending on the shapes and sizes of the tapered shaft **40** and the hub **30** and further the use of the first oil groove **44** and the second oil groove **46**. The essential thing is that in the case where two oil grooves of the first oil groove **44** and the second oil groove **46** are provided, a procedure suitable for decoupling the tapered shaft **40** from the hub **30** most efficiently should be used.

Means for feeding oil selectively from the first oil groove **44** and the second oil groove **46** is not subject to any restriction. For example, a nozzle member formed with discharge holes at positions corresponding to the first oil groove **44** and the second oil groove **46** is inserted into the axial oil passage **42**, and is advanced and retracted.

The above is a description of embodiments of the present invention. Besides the above-described embodiments, the configurations described in the above-described embodiments can be taken and left, or can be changed appropriately to another configuration as far as not departing from the spirit and scope of the present invention.

For example, the oil groove can be provided in the hub as described in Japanese Registered Utility Model No. 3054261, or the oil passage can be provided in the hub. Also, in the above description, explanation of decoupling has been given. However, needless to say, the present invention is effective for coupling operation.

In a rotating machine **200** including a driver **210** for delivering a rotational force and a driven equipment **220** rotationally driven by the output of the driver **210** as shown in FIG. **7**, the tapered coupling structure **10** (**50**, **70**) described above is used as a coupling structure **230** for transmitting the output of the driver **210** to the driven equipment **220**. In this case, the tapered coupling structure is formed by providing a taper-shaped shaft end on either one of the rotating shaft on the driver **210** side and the rotating shaft on the driven equipment **220** side and by providing a hub on the other thereof. As the driver **210**, for example, a steam turbine, a gas turbine, an internal combustion engine, or an electric motor is used. As the driven equipment **220**, a compressor, a wheel, a propeller, or the like is used. Between the driver **210** and the driven equipment **220**, a speed-up gear and/or a variable speed gear can be provided. In this case, the shaft end of the rotating shaft of the speed-up gear and/or the variable speed gear may be made taper-shaped, or a hub may be provided thereon.

What is claimed is:

1. A tapered coupling structure comprising:

a tapered shaft having a taper part with a front end surface; and

a hub to be coupled to the tapered shaft, wherein

the taper part is on a side of the tapered shaft which is coupled to the hub,

the hub includes a base part and a part having a thickness in a radial direction that is greater than that of the base part and having a rigidity in the radial direction that is greater than that of the base part,

an outer peripheral surface of the taper part or an inner peripheral surface of the hub has formed therein a first oil groove, a second oil groove, and a connecting oil groove that communicates with the first and second oil grooves to feed oil to coupling surfaces of the taper part of the tapered shaft and the part and base part of the hub,

the first oil groove is provided in a first region corresponding to the part of the hub in an axial direction,

the tapered shaft has an axial oil passage located therein that extends in an axial direction of the tapered shaft from the front end surface of the taper part, and a radial oil passage extending in a radial direction of the tapered shaft and communicating with the axial oil passage,

the radial oil passage has opposite ends that both open to the outer peripheral surface of the taper part, and

the second oil groove is provided in a second region that is different from the first region and that is at a position at which the opposite ends of the radial oil passage open to the outer peripheral surface of the taper part.

2. The tapered coupling structure according to claim **1**, wherein the part of the hub is arranged adjacent to a front end side of a coupling part of the taper part of the tapered shaft.

3. The tapered coupling structure according to claim **2**, wherein

the part of the hub has a width in the axial direction, and

the first oil groove is positioned at a rear end side of a center of the width of the part in the axial direction away from the front end surface of the taper part.

4. A rotating machine comprising:

a driving device for delivering a rotational force;

a driven device rotationally driven by the driving device; and

a coupling structure for transmitting the rotational force of the driving device to the driven device, wherein

the coupling structure comprises the tapered coupling structure according to claim **1**.

* * * * *