PTO-1390 (03-13)
Approved for use through 4/30/2013. OMB 0651-0021
U.S. Patent and Trademark Office; U.S. DEPARTMENT OF COMMERCE
Under the Paperwork Reduction Act of 1995, no persons are required to respond to a collection of information unless it displays a valid OMB control number.

TRANSMITTAL LETTER TO THE UNITED STATES DESIGNATED/ELECTED OFFICE (DO/EO/US) CONCERNING A SUBMISSION UNDER 35 U.S.C. 371

Attorney Docket No.	U.S. Application No. (if known, see 37 CFR 1.5)
SC 14208WOUS	

International Application No.	International Filing Date	Priority Date Claimed
PCT/EP2014/060594	2014-05-23	2013-11-12

Title of Invention
GYRATORY CRUSHER MAIN SHAFT AND ASSEMBLY

First Named Inventor
BERGMAN

Applicant herewith submits to the United States Designated/Elected Office (DO/EO/US) the following items and other information.

1. ☐ This is an express request to begin national examination procedures (35 U.S.C. 371(f)). NOTE: The express request under 35 U.S.C. 371(f) will not be effective unless the requirements under 35 U.S.C. 371(c)(1), (2), and (4) for payment of the basic national fee, copy of the International Application and English translation thereof (if required), and the oath or declaration of the inventor(s) have been received.
2. ☑ A copy of the International Application (35 U.S.C. 371(c)(2)) is attached hereto (not required if the International Application was previously communicated by the International Bureau or was filed in the United States Receiving Office (RO/US)).
3. An English language translation of the International Application (35 U.S.C. 371(c)(2))
   a. ☐ is attached hereto.
   b. ☐ has been previously submitted under 35 U.S.C. 154(d)(4).
4. An oath or declaration of the inventor(s) (35 U.S.C. 371(c)(4))
   a. ☐ is attached.
   b. ☐ was previously filed in the international phase under PCT Rule 4.17(iv).

Items 5 to 8 below concern amendments made in the international phase.

PCT Article 19 and 34 amendments

5. ☐ Amendments to the claims under PCT Article 19 are attached (not required if communicated by the International Bureau) (35 U.S.C. 371(c)(3)).
6. ☐ English translation of the PCT Article 19 amendment is attached (35 U.S.C. 371(c)(3)).
7. ☐ English translation of annexes (Article 19 and/or 34 amendments only) of the International Preliminary Examination Report is attached (35 U.S.C. 371(c)(5)).

Cancellation of amendments made in the international phase

8a. ☐ Do not enter the amendment made in the international phase under PCT Article 19.

8b. ☐ Do not enter the amendment made in the international phase under PCT Article 34.

NOTE: A proper amendment made in English under Article 19 or 34 will be entered in the U.S. national phase application absent a clear instruction from applicant not to enter the amendment(s).

The following items 9 to 17 concern a document(s) or information included.

9. ☑ An Information Disclosure Statement under 37 CFR 1.97 and 1.98.
10. ☑ A preliminary amendment.
11. ☑ An Application Data Sheet under 37 CFR 1.76.
12. ☐ A substitute specification. NOTE: A substitute specification cannot include claims. See 37 CFR 1.125(b).
13. ☐ A power of attorney and/or change of address letter.
14. ☐ A computer-readable form of the sequence listing in accordance with PCT Rule 13*ter*.3 and 37 CFR 1.821-1.825.
15. ☐ Assignment papers *(cover sheet and document(s))*. Name of Assignee: _____
16. ☐ 37 CFR 3.73(c) Statement *(when there is an Assignee)*.

IPR2024-01381
CMS Cepcor, LTD, and CMS America, LLC
EXHIBIT 1001-1

This collection of information is required by 37 CFR 1.414 and 1.491-1.492. The information is required to obtain or retain a benefit by the public, which is to file (and by the USPTO to process) an application. Confidentiality is governed by 35 U.S.C. 122 and 37 CFR 1.11 and 1.14. This collection is estimated to take 15 minutes to complete, including gathering, preparing, and submitting the completed application form to the USPTO. Time will vary depending upon the individual case. Any comments on the amount of time you require to complete this form and/or suggestions for reducing this burden should be sent to the Chief Information Officer, U.S. Patent and Trademark Office, U.S. Department of Commerce, P.O. Box 1450, Alexandria, VA 22313-1450. DO NOT SEND FEES OR COMPLETED FORMS TO THIS ADDRESS. SEND TO: Mail Stop PCT, Commissioner for Patents, P.O. Box 1450, Alexandria, VA 22313-1450.

U.S. APPLN. No. (if known – see 37 CFR 1.5)	INTERNATIONAL APPLICATION No.	ATTORNEY DOCKET No.
	PCT/EP2014/060594	SC 14208WOUS

17. ☑ Other items or information:

(a) PCT/IB/308

The following fees have been submitted.	CALCULATIONS	PTO USE ONLY
18. ☑ Basic national fee (37 CFR 1.492(a)) **$280**	$ 280	
19. ☑ Examination fee (37 CFR 1.492(c)) If the written opinion prepared by ISA/US or the international preliminary examination report prepared by IPEA/US indicates all claims satisfy provisions of PCT Article 33(1)-(4) ..... **$0** All other situations **$720**	$ 720	
20. ☑ Search fee (37 CFR 1.492(b)) If the written opinion prepared by ISA/US or the international preliminary examination report prepared by IPEA/US indicates all claims satisfy provisions of PCT Article 33(1)-(4) ..... **$0** Search fee (37 CFR 1.445(a)(2)) has been paid on the international application to the USPTO as an International Searching Authority .....**$120** International Search Report prepared by an ISA other than the US and provided to the Office or previously communicated to the US by the IB .....**$480** All other situations **$600**	$ 480	
TOTAL OF 18, 19, and 20 =	$	
☐ Additional fee for specification and drawings filed in paper over 100 sheets (excluding sequence listing in compliance with 37 CFR 1.821(c) or (e) in an electronic medium or computer program listing in an electronic medium) (37 CFR 1.492(j)). Fee for each additional 50 sheets of paper or fraction thereof **$400**		

Total Sheets	Extra Sheets	Number of each addition 50 or fraction thereof (round **up** to a whole number)	RATE	
- 100 =	/ 50 =		x **$400**	$

Surcharge of **$140.00** for furnishing any of the search fee, examination fee, or the oath or declaration after the date of commencement of the national stage (37 CFR 1.492(h)).				$
CLAIMS	NUMBER FILED	NUMBER EXTRA	RATE	
Total claims	- 20 =		x **$80**	$
Independent claims	- 3 =		x **$420**	$
MULTIPLE DEPENDENT CLAIM(S) (if applicable)			**+ $780**	$
Processing fee of **$140.00** for furnishing the English translation later than 30 months from the earliest claimed priority date (37 CFR 1.492(i)). +				$
TOTAL OF ABOVE CALCULATIONS =				$ 1480
☐ **Applicant asserts small entity status.** See 37 CFR 1.27. Fees above are reduced by ½.				
☐ **Applicant certifies micro entity status.** See 37 CFR 1.29. Fees above are reduced by ¾. Applicant must attach form PTO/SB/15A or B or equivalent.				
TOTAL NATIONAL FEE =				$ 1480
Fee for recording the enclosed assignment (37 CFR 1.21(h)). The assignment must be accompanied by an appropriate cover sheet (37 CFR 3.28, 3.31). **$40.00** per property. +				$
TOTAL FEES ENCLOSED =				$
			Amount to be refunded:	$
			Amount to be charged:	$

Under the Paperwork Reduction Act of 1995, no persons are required to respond to a collection of information unless it displays a valid OMB control number.

a. ☐ A check in the amount of $_____ to cover the above fees is enclosed.

b. ☑ Please charge my Deposit Account No. 50-5792 in the amount of $ 1480 to cover the above fees.

c. ☐ The Director is hereby authorized to charge additional fees which may be required, or credit any overpayment, to Deposit Account No. _____ as follows:

i. ☐ any required fee.

ii. ☐ any required fee except for excess claims fees required under 37 CFR 1.492(d) and (e) and multiple dependent claim fee required under 37 CFR 1.492(f).

d. ☐ Fees are to be charged to a credit card. **WARNING:** Information on this form may become public. Credit card information should not be included on this form. Provide credit card information and authorization on PTO-2038. The PTO-2038 should only be mailed or faxed to the USPTO. However, when paying the basic national fee, the PTO-2038 may NOT be faxed to the USPTO.

ADVISORY: If filing by EFS-Web, do **NOT** attach the PTO-2038 form as a PDF along with your EFS-Web submission. Please be advised that this is **not** recommended and by doing so your **credit card information may be displayed via PAIR**. To protect your information, it is recommended to pay fees online by using the electronic payment method.

NOTE: Where an appropriate time limit under 37 CFR 1.495 has not been met, a petition to revive (37 CFR 1.137(a) or (b)) must be filed and granted to restore the International Application to pending status.

Statement under 37 CFR 1.55 or 1.78 for AIA (First Inventor to File)Transition Applications

☐ This application (1) claims priority to or the benefit of an application filed before March 16, 2013, and (2) also contains, or contained at any time, a claim to a claimed invention that has an effective filing date on or after March 16, 2013.

NOTE: A U.S. national stage application may not claim priority to the international application of which it is the national phase. The filing date of a U.S. national stage application is the international filing date. See 35 U.S.C. 363.

Correspondence Address

☑ The address associated with Customer Number: 78686 **OR** ☐ Correspondence address below

Name					
Address					
City		State		Zip Code	
Country		Telephone			
Email					

Signature	/Corinne Gorski/	Date	2016-05-11
Name (Print/Type)	Corinne Gorski	Registration No. (Attorney/Agent)	34339

Privacy Act Statement

The **Privacy Act of 1974 (P.L. 93-579)** requires that you be given certain information in connection with your submission of the attached form related to a patent application or patent. Accordingly, pursuant to the requirements of the Act, please be advised that: (1) the general authority for the collection of this information is 35 U.S.C. 2(b)(2); (2) furnishing of the information solicited is voluntary; and (3) the principal purpose for which the information is used by the U.S. Patent and Trademark Office is to process and/or examine your submission related to a patent application or patent. If you do not furnish the requested information, the U.S. Patent and Trademark Office may not be able to process and/or examine your submission, which may result in termination of proceedings or abandonment of the application or expiration of the patent.

The information provided by you in this form will be subject to the following routine uses:

1. The information on this form will be treated confidentially to the extent allowed under the Freedom of Information Act (5 U.S.C. 552) and the Privacy Act (5 U.S.C 552a). Records from this system of records may be disclosed to the Department of Justice to determine whether disclosure of these records is required by the Freedom of Information Act.
2. A record from this system of records may be disclosed, as a routine use, in the course of presenting evidence to a court, magistrate, or administrative tribunal, including disclosures to opposing counsel in the course of settlement negotiations.
3. A record in this system of records may be disclosed, as a routine use, to a Member of Congress submitting a request involving an individual, to whom the record pertains, when the individual has requested assistance from the Member with respect to the subject matter of the record.
4. A record in this system of records may be disclosed, as a routine use, to a contractor of the Agency having need for the information in order to perform a contract. Recipients of information shall be required to comply with the requirements of the Privacy Act of 1974, as amended, pursuant to 5 U.S.C. 552a(m).
5. A record related to an International Application filed under the Patent Cooperation Treaty in this system of records may be disclosed, as a routine use, to the International Bureau of the World Intellectual Property Organization, pursuant to the Patent Cooperation Treaty.
6. A record in this system of records may be disclosed, as a routine use, to another federal agency for purposes of National Security review (35 U.S.C. 181) and for review pursuant to the Atomic Energy Act (42 U.S.C. 218(c)).
7. A record from this system of records may be disclosed, as a routine use, to the Administrator, General Services, or his/her designee, during an inspection of records conducted by GSA as part of that agency's responsibility to recommend improvements in records management practices and programs, under authority of 44 U.S.C. 2904 and 2906. Such disclosure shall be made in accordance with the GSA regulations governing inspection of records for this purpose, and any other relevant (*i.e.*, GSA or Commerce) directive. Such disclosure shall not be used to make determinations about individuals.
8. A record from this system of records may be disclosed, as a routine use, to the public after either publication of the application pursuant to 35 U.S.C. 122(b) or issuance of a patent pursuant to 35 U.S.C. 151. Further, a record may be disclosed, subject to the limitations of 37 CFR 1.14, as a routine use, to the public if the record was filed in an application which became abandoned or in which the proceedings were terminated and which application is referenced by either a published application, an application open to public inspection or an issued patent.
9. A record from this system of records may be disclosed, as a routine use, to a Federal, State, or local law enforcement agency, if the USPTO becomes aware of a violation or potential violation of law or regulation.

PTO/AIA/14 (03-13)
Approved for use through 01/31/2014. OMB 0651-0032
U.S. Patent and Trademark Office; U.S. DEPARTMENT OF COMMERCE
Under the Paperwork Reduction Act of 1995, no persons are required to respond to a collection of information unless it contains a valid OMB control number.

Application Data Sheet 37 CFR 1.76	Attorney Docket Number	SC 14208WOUS
	Application Number	
Title of Invention	GYRATORY CRUSHER MAIN SHAFT AND ASSEMBLY	

The application data sheet is part of the provisional or nonprovisional application for which it is being submitted. The following form contains the bibliographic data arranged in a format specified by the United States Patent and Trademark Office as outlined in 37 CFR 1.76.
This document may be completed electronically and submitted to the Office in electronic format using the Electronic Filing System (EFS) or the document may be printed and included in a paper filed application.

Secrecy Order 37 CFR 5.2

☐ Portions or all of the application associated with this Application Data Sheet may fall under a Secrecy Order pursuant to 37 CFR 5.2 (Paper filers only. Applications that fall under Secrecy Order may not be filed electronically.)

Inventor Information:

Inventor 1 Remove

Legal Name

Prefix	Given Name	Middle Name	Family Name	Suffix
	Axel		BERGMAN	

Residence Information (Select One) US Residency ● Non US Residency Active US Military Service

City	Malmo	Country of Residence [i]	SE

Mailing Address of Inventor:

Address 1	Falsterbogatan 20
Address 2	S-214 36
City	Malmo
State/Province	
Postal Code	
Country [i]	SE

Inventor 2 Remove

Legal Name

Prefix	Given Name	Middle Name	Family Name	Suffix
	Mikael	M	LARSSON	

Residence Information (Select One) US Residency ◉ Non US Residency Active US Military Service

City	Eslov	Country of Residence [i]	SE

Mailing Address of Inventor:

Address 1	Ostarpsvagen 11
Address 2	S-24133
City	Eslov
State/Province	
Postal Code	
Country [i]	SE

Inventor 3 Remove

Legal Name

PTO/AIA/14 (03-13)
Approved for use through 01/31/2014. OMB 0651-0032
U.S. Patent and Trademark Office; U.S. DEPARTMENT OF COMMERCE
Under the Paperwork Reduction Act of 1995, no persons are required to respond to a collection of information unless it contains a valid OMB control number.

Application Data Sheet 37 CFR 1.76	Attorney Docket Number	SC 14208WOUS
	Application Number	
Title of Invention	GYRATORY CRUSHER MAIN SHAFT AND ASSEMBLY	

Prefix	Given Name	Middle Name	Family Name	Suffix
	Patric		MALMQVIST	

Residence Information (Select One) US Residency ◉ Non US Residency Active US Military Service

City	Svedala	Country of Residence i	SE

Mailing Address of Inventor:

Address 1	Nilsakessongatan 31		
Address 2	S-23333		
City	Svedala	State/Province	
Postal Code		Country i	SE

Inventor 4 Remove

Legal Name

Prefix	Given Name	Middle Name	Family Name	Suffix
	Anders		HALLBERG	

Residence Information (Select One) US Residency ◉ Non US Residency Active US Military Service

City	Sodra Sandby	Country of Residence i	SE

Mailing Address of Inventor:

Address 1	Stubbvagen 28		
Address 2	S-247 33		
City	Sodra Sandby	State/Province	
Postal Code		Country i	SE

Inventor 5 Remove

Legal Name

Prefix	Given Name	Middle Name	Family Name	Suffix
	Matts-Ake		NILSSON	

Residence Information (Select One) US Residency ◉ Non US Residency Active US Military Service

City	Gards Kopinge	Country of Residence i	SE

Mailing Address of Inventor:

Address 1	Ninas vag 5		
Address 2	S-291 77		
City	Gards Kopinge	State/Province	
Postal Code		Country i	SE

PTO/AIA/14 (03-13)
Approved for use through 01/31/2014. OMB 0651-0032
U.S. Patent and Trademark Office; U.S. DEPARTMENT OF COMMERCE
Under the Paperwork Reduction Act of 1995, no persons are required to respond to a collection of information unless it contains a valid OMB control number.

Application Data Sheet 37 CFR 1.76	Attorney Docket Number	SC 14208WOUS
	Application Number	
Title of Invention	GYRATORY CRUSHER MAIN SHAFT AND ASSEMBLY	

Inventor 6 Remove

Legal Name

Prefix	Given Name	Middle Name	Family Name	Suffix
	Fredrik		ERIKSSON	

Residence Information (Select One) US Residency ◉ Non US Residency Active US Military Service

City	Malmo	Country of Residence i	SE

Mailing Address of Inventor:

Address 1	Gronegatan 34
Address 2	S-21127
City	Malmo
State/Province	
Postal Code	
Country i	SE

Inventor 7 Remove

Legal Name

Prefix	Given Name	Middle Name	Family Name	Suffix
	Bengt-Arne		ERIKSSON	

Residence Information (Select One) US Residency ◉ Non US Residency Active US Military Service

City	Svedala	Country of Residence i	SE

Mailing Address of Inventor:

Address 1	Sveagatan 4
Address 2	S-233 33
City	Svedala
State/Province	
Postal Code	
Country i	SE

Inventor 8 Remove

Legal Name

Prefix	Given Name	Middle Name	Family Name	Suffix
	Anne		HOLOMBERG	

Residence Information (Select One) US Residency ◉ Non US Residency Active US Military Service

City	Loddekopinge	Country of Residence i	SE

Mailing Address of Inventor:

Address 1	Bagerivagen 22
Address 2	S-246 30

PTO/AIA/14 (03-13)
Approved for use through 01/31/2014. OMB 0651-0032
U.S. Patent and Trademark Office; U.S. DEPARTMENT OF COMMERCE
Under the Paperwork Reduction Act of 1995, no persons are required to respond to a collection of information unless it contains a valid OMB control number.

Application Data Sheet 37 CFR 1.76	Attorney Docket Number	SC 14208WOUS
	Application Number	
Title of Invention	GYRATORY CRUSHER MAIN SHAFT AND ASSEMBLY	

City	Loddekopinge	State/Province	
Postal Code		Country i	SE

All Inventors Must Be Listed - Additional Inventor Information blocks may be generated within this form by selecting the **Add** button. Add

Correspondence Information:

Enter either Customer Number or complete the Correspondence Information section below.
For further information see 37 CFR 1.33(a).

☐ **An Address is being provided for the correspondence Information of this application.**

Customer Number	78686		
Email Address		Add Email	Remove Email

Application Information:

Title of the Invention	GYRATORY CRUSHER MAIN SHAFT AND ASSEMBLY		
Attorney Docket Number	SC 14208WOUS	Small Entity Status Claimed	☐
Application Type	Nonprovisional		
Subject Matter	Utility		
Total Number of Drawing Sheets (if any)		Suggested Figure for Publication (if any)	

Publication Information:

☐ Request Early Publication (Fee required at time of Request 37 CFR 1.219)

☐ **Request Not to Publish.** I hereby request that the attached application not be published under 35 U.S.C. 122(b) and certify that the invention disclosed in the attached application **has not and will not** be the subject of an application filed in another country, or under a multilateral international agreement, that requires publication at eighteen months after filing.

Representative Information:

Representative information should be provided for all practitioners having a power of attorney in the application. Providing this information in the Application Data Sheet does not constitute a power of attorney in the application (see 37 CFR 1.32).
Either enter Customer Number or complete the Representative Name section below. If both sections are completed the customer Number will be used for the Representative Information during processing.

Please Select One:	● Customer Number	US Patent Practitioner	○ Limited Recognition (37 CFR 11.9)
Customer Number	78686		

PTO/AIA/14 (03-13)
Approved for use through 01/31/2014. OMB 0651-0032
U.S. Patent and Trademark Office; U.S. DEPARTMENT OF COMMERCE
Under the Paperwork Reduction Act of 1995, no persons are required to respond to a collection of information unless it contains a valid OMB control number.

Application Data Sheet 37 CFR 1.76	Attorney Docket Number	SC 14208WOUS
	Application Number	
Title of Invention	GYRATORY CRUSHER MAIN SHAFT AND ASSEMBLY	

Domestic Benefit/National Stage Information:

This section allows for the applicant to either claim benefit under 35 U.S.C. 119(e), 120, 121, or 365(c) or indicate National Stage entry from a PCT application. Providing this information in the application data sheet constitutes the specific reference required by 35 U.S.C. 119(e) or 120, and 37 CFR 1.78.

Prior Application Status	Pending		Remove
Application Number	Continuity Type	Prior Application Number	Filing Date (YYYY-MM-DD)
	a 371 of international	PCT/EP2014/060594	2014-05-23

Additional Domestic Benefit/National Stage Data may be generated within this form by selecting the **Add** button. Add

Foreign Priority Information:

This section allows for the applicant to claim priority to a foreign application. Providing this information in the application data sheet constitutes the claim for priority as required by 35 U.S.C. 119(b) and 37 CFR 1.55(d). When priority is claimed to a foreign application that is eligible for retrieval under the priority document exchange program (PDX)[i] the information will be used by the Office to automatically attempt retrieval pursuant to 37 CFR 1.55(h)(1) and (2). Under the PDX program, applicant bears the ultimate responsibility for ensuring that a copy of the foreign application is received by the Office from the participating foreign intellectual property office, or a certified copy of the foreign priority application is filed, within the time period specified in 37 CFR 1.55(g)(1).

Remove

Application Number	Country[i]	Filing Date (YYYY-MM-DD)	Access Code[i] (if applicable)
13192402.9	EP	2013-11-12	

Additional Foreign Priority Data may be generated within this form by selecting the **Add** button. Add

Statement under 37 CFR 1.55 or 1.78 for AIA (First Inventor to File) Transition Applications

This application (1) claims priority to or the benefit of an application filed before March 16, 2013 and (2) also contains, or contained at any time, a claim to a claimed invention that has an effective filing date on or after March 16, 2013.

Authorization to Permit Access:

☒ Authorization to Permit Access to the Instant Application by the Participating Offices

PTO/AIA/14 (03-13)
Approved for use through 01/31/2014. OMB 0651-0032
U.S. Patent and Trademark Office; U.S. DEPARTMENT OF COMMERCE
Under the Paperwork Reduction Act of 1995, no persons are required to respond to a collection of information unless it contains a valid OMB control number.

Application Data Sheet 37 CFR 1.76	Attorney Docket Number	SC 14208WOUS
	Application Number	
Title of Invention	GYRATORY CRUSHER MAIN SHAFT AND ASSEMBLY	

If checked, the undersigned hereby grants the USPTO authority to provide the European Patent Office (EPO), the Japan Patent Office (JPO), the Korean Intellectual Property Office (KIPO), the World Intellectual Property Office (WIPO), and any other intellectual property offices in which a foreign application claiming priority to the instant patent application is filed access to the instant patent application. See 37 CFR 1.14(c) and (h). This box should not be checked if the applicant does not wish the EPO, JPO, KIPO, WIPO, or other intellectual property office in which a foreign application claiming priority to the instant patent application is filed to have access to the instant patent application.

In accordance with 37 CFR 1.14(h)(3), access will be provided to a copy of the instant patent application with respect to: 1) the instant patent application-as-filed; 2) any foreign application to which the instant patent application claims priority under 35 U.S.C. 119(a)-(d) if a copy of the foreign application that satisfies the certified copy requirement of 37 CFR 1.55 has been filed in the instant patent application; and 3) any U.S. application-as-filed from which benefit is sought in the instant patent application.

In accordance with 37 CFR 1.14(c), access may be provided to information concerning the date o f filing this Authorization.

Applicant Information:

Providing assignment information in this section does not substitute for compliance with any requirement of part 3 of Title 37 of CFR to have an assignment recorded by the Office.

Applicant 1 — Remove

If the applicant is the inventor (or the remaining joint inventor or inventors under 37 CFR 1.45), this section should not be completed. The information to be provided in this section is the name and address of the legal representative who is the applicant under 37 CFR 1.43; or the name and address of the assignee, person to whom the inventor is under an obligation to assign the invention, or person who otherwise shows sufficient proprietary interest in the matter who is the applicant under 37 CFR 1.46. If the applicant is an applicant under 37 CFR 1.46 (assignee, person to whom the inventor is obligated to assign, or person who otherwise shows sufficient proprietary interest) together with one or more joint inventors, then the joint inventor or inventors who are also the applicant should be identified in this section.

Clear

● Assignee	Legal Representative under 35 U.S.C. 117	Joint Inventor
Person to whom the inventor is obligated to assign.	Person who shows sufficient proprietary interest	

If applicant is the legal representative, indicate the authority to file the patent application, the inventor is:

Name of the Deceased or Legally Incapacitated Inventor :

If the Applicant is an Organization check here. ☒

Organization Name	SANDVIK INTELECTUAL PROPERTY AB		
Mailing Address Information For Applicant:			
Address 1	SE-811 81		
Address 2			
City	Sandviken	**State/Province**	
Country	SE	Postal Code	
Phone Number		Fax Number	

PTO/AIA/14 (03-13)
Approved for use through 01/31/2014. OMB 0651-0032
U.S. Patent and Trademark Office; U.S. DEPARTMENT OF COMMERCE
Under the Paperwork Reduction Act of 1995, no persons are required to respond to a collection of information unless it contains a valid OMB control number.

Application Data Sheet 37 CFR 1.76	Attorney Docket Number	SC 14208WOUS
	Application Number	
Title of Invention	GYRATORY CRUSHER MAIN SHAFT AND ASSEMBLY	

Email Address	

Additional Applicant Data may be generated within this form by selecting the Add button. Add

Non-Applicant Assignee Information:

Providing assignment information in this section does not subsitute for compliance with any requirement of part 3 of Title 37 of CFR to have an assignment recorded by the Office.

Assignee 1

Complete this section only if non-applicant assignee information is desired to be included on the patent application publication in accordance with 37 CFR 1.215(b). Do not include in this section an applicant under 37 CFR 1.46 (assignee, person to whom the inventor is obligated to assign, or person who otherwise shows sufficient proprietary interest), as the patent application publication will include the name of the applicant(s).

Remove

If the Assignee is an Organization check here. ☐

Prefix	**Given Name**	Middle Name	**Family Name**	Suffix

Mailing Address Information For Non-Applicant Assignee:

Address 1			
Address 2			
City		**State/Province**	
Country i		Postal Code	
Phone Number		Fax Number	
Email Address			

Additional Assignee Data may be generated within this form by selecting the Add button. Add

Signature:

Remove

NOTE: This form must be signed in accordance with 37 CFR 1.33. See 37 CFR 1.4 for signature requirements and certifications.

Signature	/Corinne Gorski/			Date (YYYY-MM-DD)	2016-05-11
First Name	Corinne	Last Name	Gorski	Registration Number	34339

Additional Signature may be generated within this form by selecting the Add button. Add

PTO/AIA/14 (03-13)
Approved for use through 01/31/2014. OMB 0651-0032
U.S. Patent and Trademark Office; U.S. DEPARTMENT OF COMMERCE
Under the Paperwork Reduction Act of 1995, no persons are required to respond to a collection of information unless it contains a valid OMB control number.

Application Data Sheet 37 CFR 1.76	Attorney Docket Number	SC 14208WOUS
	Application Number	
Title of Invention	GYRATORY CRUSHER MAIN SHAFT AND ASSEMBLY	

This collection of information is required by 37 CFR 1.76. The information is required to obtain or retain a benefit by the public which is to file (and by the USPTO to process) an application. Confidentiality is governed by 35 U.S.C. 122 and 37 CFR 1.14. This collection is estimated to take 23 minutes to complete, including gathering, preparing, and submitting the completed application data sheet form to the USPTO. Time will vary depending upon the individual case. Any comments on the amount of time you require to complete this form and/or suggestions for reducing this burden, should be sent to the Chief Information Officer, U.S. Patent and Trademark Office, U.S. Department of Commerce, P.O. Box 1450, Alexandria, VA 22313-1450. DO NOT SEND FEES OR COMPLETED FORMS TO THIS ADDRESS. **SEND TO: Commissioner for Patents, P.O. Box 1450, Alexandria, VA 22313-1450.**

Privacy Act Statement

The Privacy Act of 1974 (P.L. 93-579) requires that you be given certain information in connection with your submission of the attached form related to a patent application or patent. Accordingly, pursuant to the requirements of the Act, please be advised that: (1) the general authority for the collection of this information is 35 U.S.C. 2(b)(2); (2) furnishing of the information solicited is voluntary; and (3) the principal purpose for which the information is used by the U.S. Patent and Trademark Office is to process and/or examine your submission related to a patent application or patent. If you do not furnish the requested information, the U.S. Patent and Trademark Office may not be able to process and/or examine your submission, which may result in termination of proceedings or abandonment of the application or expiration of the patent.

The information provided by you in this form will be subject to the following routine uses:

1. The information on this form will be treated confidentially to the extent allowed under the Freedom of Information Act (5 U.S.C. 552) and the Privacy Act (5 U.S.C. 552a). Records from this system of records may be disclosed to the Department of Justice to determine whether the Freedom of Information Act requires disclosure of these records.

2. A record from this system of records may be disclosed, as a routine use, in the course of presenting evidence to a court, magistrate, or administrative tribunal, including disclosures to opposing counsel in the course of settlement negotiations.

3. A record in this system of records may be disclosed, as a routine use, to a Member of Congress submitting a request involving an individual, to whom the record pertains, when the individual has requested assistance from the Member with respect to the subject matter of the record.

4. A record in this system of records may be disclosed, as a routine use, to a contractor of the Agency having need for the information in order to perform a contract. Recipients of information shall be required to comply with the requirements of the Privacy Act of 1974, as amended, pursuant to 5 U.S.C. 552a(m).

5. A record related to an International Application filed under the Patent Cooperation Treaty in this system of records may be disclosed, as a routine use, to the International Bureau of the World Intellectual Property Organization, pursuant to the Patent Co o p eration Treaty.

6. A record in this system of records may be disclosed, as a routine use, to another federal agency for purposes of National Security review (35 U.S.C. 181) and for review pursuant to the Atomic Energy Act (42 U.S.C. 218(c)).

7. A record from this system of records may be disclosed, as a routine use, to the Administrator, General Services, or his/her designee, during an inspection of records conducted by GSA as part of that agency's responsibility to recommend improvements in records management practices and programs, under authority of 44 U.S.C. 2904 and 2906. Such disclosure shall be made in accordance with the GSA regulations governing inspection of records for this purpose, and any other relevant (i.e., GSA or Commerce) directive. Such disclosure shall not be used to make determinations about individuals.

8. A record from this system of records may be disclosed, as a routine use, to the public after either publication of the application pursuant to 35 U.S.C. 122(b) or issuance of a patent pursuant to 35 U.S.C. 151. Further, a record may be disclosed, subject to the limitations of 37 CFR 1.14, as a routine use, to the public if the record was filed in an application which became abandoned or in which the proceedings were terminated and which application is referenced by either a published application, an application open to public inspections or an issued patent.

9. A record from this system of records may be disclosed, as a routine use, to a Federal, State, or local law enforcement agency, if the USPTO becomes aware of a violation or potential violation of law or regulation.

(12) INTERNATIONAL APPLICATION PUBLISHED UNDER THE PATENT COOPERATION TREATY (PCT)

(19) World Intellectual Property Organization
International Bureau

(43) International Publication Date
21 May 2015 (21.05.2015)

WIPO | PCT

(10) International Publication Number
WO 2015/070993 A1

(51) International Patent Classification:
B02C 2/06 (2006.01)

(21) International Application Number:
PCT/EP2014/060594

(22) International Filing Date:
23 May 2014 (23.05.2014)

(25) Filing Language: English

(26) Publication Language: English

(30) Priority Data:
13192402.9 12 November 2013 (12.11.2013) EP

(71) Applicant: **SANDVIK INTELLECTUAL PROPERTY AB** [SE/SE]; S-811 81 Sandviken (SE).

(72) Inventors: **BERGMAN, Axel**; Falsterbogatan 20, S-214 36 Malmö (SE). **LARSSON, Mikael M**; Östarpsvägen 11, S-24133 Eslöv (SE). **MALMQVIST, Patric**; Nilsåkessongatan 31, S-23333 Svedala (SE). **HALLBERG, Anders**; Stubbvägen 28, S-247 33 Södra Sandby (SE). **NILSSON, Matts-Åke**; Ninas väg 5, S-291 77 Gärds Köpinge (SE). **ERIKSSON, Fredrik**; Grönegatan 34, S-21127 Malmö (SE). **ERIKSSON, Bengt-Arne**; Sveagatan 4, S-233 33 Svedala (SE). **HOLOMBERG, Anne**; Bagerivägen 22, S-246 30 Löddeköpinge (SE).

(74) Agent: **HAMMARSJÖ, Joakim**; Sandvik Intellectual Property AB, S-811 81 Sandviken (SE).

(81) Designated States *(unless otherwise indicated, for every kind of national protection available)*: AE, AG, AL, AM, AO, AT, AU, AZ, BA, BB, BG, BH, BN, BR, BW, BY, BZ, CA, CH, CL, CN, CO, CR, CU, CZ, DE, DK, DM, DO, DZ, EC, EE, EG, ES, FI, GB, GD, GE, GH, GM, GT, HN, HR, HU, ID, IL, IN, IR, IS, JP, KE, KG, KN, KP, KR, KZ, LA, LC, LK, LR, LS, LT, LU, LY, MA, MD, ME, MG, MK, MN, MW, MX, MY, MZ, NA, NG, NI, NO, NZ, OM, PA, PE, PG, PH, PL, PT, QA, RO, RS, RU, RW, SA, SC, SD, SE, SG, SK, SL, SM, ST, SV, SY, TH, TJ, TM, TN, TR, TT, TZ, UA, UG, US, UZ, VC, VN, ZA, ZM, ZW.

(84) Designated States *(unless otherwise indicated, for every kind of regional protection available)*: ARIPO (BW, GH, GM, KE, LR, LS, MW, MZ, NA, RW, SD, SL, SZ, TZ, UG, ZM, ZW), Eurasian (AM, AZ, BY, KG, KZ, RU, TJ, TM), European (AL, AT, BE, BG, CH, CY, CZ, DE, DK, EE, ES, FI, FR, GB, GR, HR, HU, IE, IS, IT, LT, LU, LV,

[Continued on next page]

(54) Title: GYRATORY CRUSHER MAIN SHAFT AND ASSEMBLY

(57) Abstract: A gyratory crusher main shaft assembly in which an axially upper region (113) of the main shaft comprises a tapered conical section with a protective sleeve friction (124) fitted over the cone. To facilitate mounting and dismounting of the sleeve (124), at least one groove (121) is indented within a radially external facing surface of the main shaft at the region of the cone to allow fluid to be introduced under pressure to the region between the sleeve and the cone.

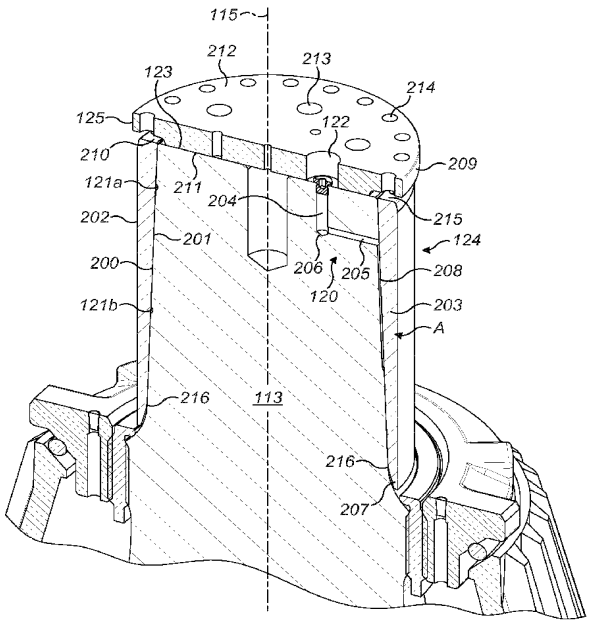

FIG. 2

WO 2015/070993 A1

MC, MK, MT, NL, NO, PL, PT, RO, RS, SE, SI, SK, SM, TR), OAPI (BF, BJ, CF, CG, CI, CM, GA, GN, GQ, GW, KM, ML, MR, NE, SN, TD, TG).

Declarations under Rule 4.17:

— *as to applicant's entitlement to apply for and be granted a patent (Rule 4.17(ii))*

Published:

— *with international search report (Art. 21(3))*

Gyratory Crusher Main Shaft and Assembly

Field of invention

The present invention relates to a gyratory crusher main shaft and main shaft assembly for positioning within a gyratory crusher and in particular, although not exclusively, to a main shaft having an axial upper end region that tapers radially inward and comprises at least one groove to receive a pressurised fluid to facilitate mounting and demounting of a sleeve at the shaft.

Background art

Gyratory crushers are used for crushing ore, mineral and rock material to smaller sizes. Typically, the crusher comprises a crushing head mounted upon an elongate main shaft. A first crushing shell is mounted on the crushing head and a second crushing shell is mounted on a frame such that the first and second crushing shells define together a crushing chamber through which the material to be crushed is passed.

The gyratory pendulum movement of the crushing head is supported by a lower bearing assembly positioned below the crushing head and a top bearing into which an upper end of the main shaft is journalled. Typically, the main shaft upper end is protected against wear by a sleeve. Commonly, the protective sleeve comprises a cylindrical geometry and is held at the main shaft via an interference or friction fit. Example protective sleeves are disclosed in US 1,402,255; US 1,592,313; US 1,748,102; RU 718160; US 4,027,825; RU 940837 and US 5,934,583.

However, a number of problems exist with conventional protective sleeves. In particular, if the time taken to friction fit the heated sleeve onto the main shaft end is too great it is not uncommon for the sleeve to cool and shrink before it is forced onto the shaft to the correct and final position. Additionally, disassembly is often problematic as the sleeve is required to be cut before it can be removed. On large crushers, protective sleeves have a substantial wall thickness and this cutting operation can be time and labour intensive with the added risk of potential damage to the shaft. Conventional mounting and dismounting procedures, due to the design of the main shaft and sleeve, are therefore disadvantageous in that they pose a risk of damage to the main shaft (and other components), injury to personnel and unacceptably long downtime of the crusher during repair and maintenance. Accordingly, what is required is a main shaft and main shaft assembly having a sleeve that addresses the above problems.

Summary of the Invention

It is an objective of the present invention to provide a gyratory crusher main shaft and a main shaft assembly (having a sleeve) that enables convenient mounting and dismounting of the protective sleeve at the upper end of the shaft that obviates a requirement for excessive heating of the main shaft and the use of grinding and cutting apparatus that otherwise carries a risk of damage to the main shaft and injury to service personnel.

It is a further specific objective of the present invention to provide a main shaft and sleeve assembly that facilitates mounting and dismounting of the sleeve at the shaft via control of

a pressurised fluid delivered to the region of an axially upper end of the shaft radially between the shaft and the sleeve.

The objectives are achieved by providing a main shaft comprising at least one groove or channel indented on an outward facing external surface of the shaft. The groove is configured and dimensioned to receive a fluid under pressure to force separation of the sleeve from the main shaft. Providing the groove at the main shaft as opposed to the sleeve, is advantageous to maintain the strength and integrity of the sleeve to avoid fracture or splitting in response to the introduction of the pressurised fluid radially between the main shaft and the sleeve. The present invention is advantageous to allow the fluid to be introduced into the region between the main shaft and the sleeve via different routing options including in particular i) a conduit extending axially and/or radially at and/or within the main shaft and ii) a supply conduit extending through the sleeve wall. Reference to the conduit extending axially encompasses the conduit being aligned transverse or parallel to the longitudinal axis of the main shaft.

As will be appreciated, the subject invention is compatible for use with existing fluid supply arrangements including conduits, pumps, fluid reservoirs, seals, gaskets etc.

According to a specific aspect of the present invention there is provided a gyratory crusher main shaft comprising: a shaft body having a radially outward facing external surface and having a first end for positioning at a lower region of the crusher and a second end for positioning at an upper region of the crusher relative to the first end; an axial region of the shaft body extending from the second end is tapered relative to a longitudinal axis of the shaft body such that a cross sectional area of the shaft body at the tapered region decreases in a direction from the first end to the second end, the tapered region configured to mount a shaft sleeve; characterised by: at least one groove indented at the external surface and positioned at the tapered region and capable of receiving a pressurised fluid to facilitate mounting and dismounting of the sleeve at the shaft body.

The subject invention provides for the convenient and efficient mounting and dismounting of the sleeve at the main shaft by virtue of the combination of the fluid filled grooves or

channels, at the external surface of the main shaft and the radially tapered end section of the main shaft onto which the sleeve is mounted. Without this radially tapered upper end section, the sleeve would still require significant manual intervention to provide axial movement over the surface of the shaft. The conical profiled and grooved main shaft section in combination with a corresponding tapered sleeve is therefore advantageous to firstly allow the fluid to be introduced and then to greatly facilitate and provide immediate axial movement of the sleeve relative to the main shaft.

Preferably, the main shaft further comprises a fluid inlet conduit extending axially from the second end and provided in fluid communication with the groove to allow a fluid to be supplied to the groove from the second end. Positioning the inlet conduit internally at the main shaft is advantageous to avoid routing the fluid through the sleeve which would otherwise require modification and a potential weakening of the sleeve and in particular the sleeve wall. Preferably, the conduit extends internally within the shaft body such that a part of the conduit extends radially outward to the groove. Optionally, at least a part of the conduit is indented and extends axially at the external surface as a channel. The channel may preferably extend axially at the external surface between a plurality of grooves to couple the grooves in fluid communication. Such an arrangement is advantageous to reduce the axial length of any internal bore through the main shaft. Minimising an axial length of an internally extending fluid supply conduit is advantageous during manufacture as the use of very long and thin drills should be avoided. A channel or groove indented on the external surface of the main shaft is therefore more convenient and efficient for manufacture.

Preferably, the groove extends in a circumferential direction around the shaft body. More preferably, the groove extends substantially completely circumferentially around the shaft body. The circumferentially extending groove is advantageous to provide a supply of fluid in a circumferential direction between the main shaft and the sleeve to ensure a uniform expansion pressure and lubrication during dismounting and mounting. Accordingly, '*dry*' regions that could otherwise lead to '*sticking*' or '*freezing*' are avoided.

Preferably, the main shaft comprises a plurality of grooves at the external surface. This configuration provides that the fluid is supplied to different axial regions between the main shaft and sleeve to facilitate uniform delivery and dispersion of the fluid between the respective contact surfaces. Optionally, the main shaft comprises a first groove extending in a circumferential direction around the shaft body and second groove extending in a circumferential direction around the shaft body, the first groove separated axially from the second groove and coupled in fluid communication, optionally via one or more axially extending channels. Preferably, the first groove and the second groove are separated axially by an equal distance from a cross sectional area centre of the sleeve. Accordingly, the expansion force imparted to the sleeve is distributed uniformly along the axial length of the sleeve to both facilitate mounting and dismounting and avoid fracture or distortion of the sleeve. Reference to the '*cross sectional centre*' refers to the cross section through the sleeve in an axial plane extending parallel to the longitudinal axis of the sleeve (and the main shaft). As the sleeve comprises a wall that is tapered according to a conical configuration, the cross sectional centre is positioned closer to the upper axial end of the sleeve having the thicker wall thickness relative to the alternate lower axial end.

According to a second aspect of the present invention there is provided a gyratory crusher main shaft assembly comprising: a shaft body as claimed herein; a sleeve fitted over the tapered region, the sleeve having a tapered wall thickness such that a wall thickness at a second upper end of the sleeve is greater than a wall thickness at a first lower end of the sleeve.

Preferably, the assembly further comprises an end retainer releasably mounted at the second end of a shaft body and having a perimeter region extending radially outward beyond the external surface at the tapered region, the perimeter region positioned to radially overlap the sleeve at the second end of the sleeve to inhibit axial separation of the sleeve from the shaft body. Preferably, the retainer is releasably attached to the shaft during mounting and dismounting procedures via a plurality of attachment elements and in particular bolts or screws.

Preferably, the retainer comprises a disc-like configuration having a recess extending circumferentially at the perimeter region to allow axial movement of the sleeve into the recess. Such an arrangement is advantageous to allow a controlled axial movement of the sleeve during dismounting in response to introduction of the pressurised fluid but to inhibit complete axial separation of the sleeve from the main shaft by abutment with the retainer. Naturally, the sleeve may be removed once the retainer has been removed from the main shaft end. The retainer is also configured to force the sleeve over and about the main shaft by axial advancement of suitable attachment bolts, screws and the like.

Preferably, the assembly further comprises a fluid inlet conduit extending axially from the second end of the shaft body in fluid communication with the groove to allow a fluid to be supplied to the groove from the second end.

According to a specific embodiment, the assembly may optionally comprise a fluid inlet conduit extending radially through the wall of the sleeve in fluid communication with the groove to allow a fluid to be supplied to the groove through the sleeve.

According to a third aspect of the present invention there is provided a gyratory crusher comprising a main shaft or main shaft assembly as claimed herein.

Brief description of drawings

A specific implementation of the present invention will now be described, by way of example only, and with reference to the accompanying drawings in which:

Figure 1 is a cross sectional side view of a gyratory crusher having a main shaft supported at its upper end by a top bearing assembly and having a protective sleeve mounted about the upper end of the main shaft according to a specific implementation of the present invention;

Figure 2 is a perspective partial cross section through the upper end of the main shaft and sleeve assembly;

Figure 3 is a perspective partial cross section of the shaft upper end of figure 2 with the protective sleeve removed;

Figure 4 is a further external perspective view of the tapered axial section of the main shaft upper end of figure 3.

Detailed description of preferred embodiment of the invention

Referring to figure 1, a crusher comprises a frame 100 having an upper frame 101 and a lower frame 102. A crushing head 103 is mounted upon an elongate shaft 107 having a longitudinal axis 115. A first (inner) crushing shell 105 is fixably mounted on crushing head 103 and a second (outer) crushing shell 106 is fixably mounted at upper frame 101. A crushing zone 104 is formed between the opposed crushing shells 105, 106. A discharge zone 109 is positioned immediately below crushing zone 104 and is defined, in part, by lower frame 102.

A drive (not shown) is coupled to main shaft 107 via a drive shaft 108 and suitable gearing 116 so as to rotate shaft 107 eccentrically about a longitudinal axis 126 of the crusher and to cause head 103 to perform a gyratory pendulum movement and crush material introduced into crushing chamber 104. A first (axial upper) end region 113 of shaft 107 is maintained in a rotatable position by a top-end bearing assembly 112 positioned intermediate between main shaft 107 and a central boss 117. Similarly, a second (axial bottom) end 118 of shaft 107 is supported by a bottom-end bearing assembly 119. Upper frame 101 is divided into an upper frame part (commonly termed a topshell 111) mounted upon lower frame part 102 (commonly termed a bottom shell), and a spider assembly 114 having arms 110 that extend from topshell 111 and represents an upper portion of the crusher.

Upper end region 113 comprises a radial taper that defines an upper conical region of main shaft 107. The conical region 113 is tapered so as to decrease in cross sectional area in a direction from shaft second (lower) end 118 to an upper end surface 123 positioned

uppermost within the crusher. To avoid excessive wear of the conical region 113, by contact with bearing assembly 112, a substantially cylindrical wear sleeve 124 is mounted over and about region 113. Sleeve 124 is held in position at region 113 by an interference or friction fit and is provided in close touching contact over an axial length of both sleeve 124 and region 113. Accordingly, sleeve 124 is positioned radially intermediate bearing assembly 112 and an outer surface of region 113 to absorb the radial and axial loading forces resultant from the crushing action of the gyratory pendulum movement.

To facilitate mounting and dismounting of sleeve 124 at shaft region 113, shaft 107 is configured to enable a fluid to be introduced into the contact region between the sleeve 124 and shaft region 113. In particular, a fluid supply conduit 120 extends axially and radially along shaft 107 (within region 113) from end surface 123 to the contact region between sleeve 124 and region 113. A channel (alternatively termed a groove) 121 is indented within the external facing surface of shaft 107 at region 113 and is provided in fluid communication with conduit 120.

Referring to figures 2 to 4 tapered region 113 comprises a lowermost end 300 and an uppermost end 301. The radial taper is uniform along the axial length between ends 300, 301 such that a cross sectional area decreases from lower end 300 to upper end 301 at a uniform rate to define a frusto-conical region (113) of main shaft 107. Sleeve 124 comprises a first (lower) end 216 for mating at the end 300 of region 113 and a second (upper) end 215 for positioning at uppermost end 301 substantially coplanar with shaft end surface 123. Sleeve 124 comprises a radially inward facing surface 201 and a radially outward facing surface 202 with a substantially cylindrical wall 203 defined between surfaces 201, 202. Wall 203 is tapered so as to decrease in radial thickness from uppermost end 215 to lowermost end 216. In particular, external surface 202 is substantially cylindrical whilst internal surface 201 comprises a conical shape profile corresponding to the conical shape profile of main shaft region 113. Region A, illustrated in figure 2, corresponds to a mid-axial length position as defined by the cross sectional area of wall 203 (in a plane extending along axis 115) such that the cross sectional area axially above region A is equal to the cross sectional area axially below region A. Sleeve 124 and in particular radially inward facing surface 201 is mated in close fitting contact with the

external facing surface 200 of main shaft region 113 between respective lower (216, 300) and upper (215, 301) ends.

Sleeve lower end 216 comprises a chamfer region 207 of decreasing wall thickness such that very a lowermost end region of sleeve 124 is chamfered to sit close to a radius section of main shaft region 113 below region end 300.

A disc-like retainer 125 is releasably mounted over shaft end surface 123 during mounting and dismounting of sleeve 124 at main shaft region 113. Retainer 125 comprises a suitable bore 122 aligned coaxially with an end region of conduit 120 to allow fluid to be introduced through retainer 125 to groove 121 via conduit 120. Retaining disc 125 comprises a plurality of perimeter bores 214 distributed circumferentially around retainer 125 immediately inside of a perimeter 209. Bores 214 are configured to receive attachment bolts (not shown) received within corresponding bores (not shown) extending axially from sleeve upper end 215 so as to lock retainer 125 to sleeve 124 during mounting and dismounting procedures. Retainer 125 further comprises a plurality of additional bores 213 positioned radially inside perimeter bores 214 that are configured to receive attachment bolts (not shown) to secure retainer 125 to main shaft region 113. In particular, an underside surface 211 of retainer 125 is positioned in contact and aligned substantially coplanar with the shaft end surface 123. In this orientation, an upward facing retainer surface 212 is orientated away from main shaft 107. An annular recess 210 extends circumferentially around retainer perimeter 209 and is indented in surface 211 so as to create a small axially and radially extending annular gap region immediately axially above the annular sleeve end 215.

Accordingly, during a sleeve dismounting operation, the sleeve attachment bolts (not shown) are removed. Sleeve 124 is capable of sliding axially into the gap region defined by recess 210 to contact the underside surface 211 (at the recess 210) when fluid pressure is applied. In an alternative mounting operation, retainer 125 is inverted such that disc surface 212 is mated against sleeve end 215 and main shaft end surface 123 to force sleeve 124 axially over and about region 113 as the attachment bolts (not shown) are tightened.

Fluid supply conduit 120 comprises an axial section 204 extending downwardly from end surface 123. A lowermost end 206 of axial section 204 is terminated by a radially extending section 205 that terminates at shaft external facing surface 200. A radially outermost end of the conduit section 205 is provided in fluid communication with an axially upper groove 121a that extends circumferentially around shaft region 113.

According to the specific implementation, conical region 113 further comprises a second circumferentially extending groove 121b axially separated from the first upper groove 121a by a distance approximately half the axial length of region 113 and sleeve 124. Additionally, each groove 121a, 121b is spaced axially from region A by an equal axial distance. Grooves 121a and 121b also extend the full 360° circumference of shaft surface 200. An interconnecting fluid flow channel 208 extends axially from upper groove 121a to lower groove 121b to provide fluid communication between the two grooves 121a, 121b.

According to further specific implementations, region 113 may comprise a plurality of interconnecting fluid flow channels 208 distributed circumferentially around surface 200. According to yet further embodiments, region 113 may comprise a single circumferentially extending groove optionally in the form of at least one spiral or helix. According to a further embodiment, external facing surface 200 may comprise a network of grooves orientated and extending axially parallel or transverse to axis 115 and/or in a circumferential direction entirely or partly around the conical surface 200.

The subject invention is compatible for use with conventional fluid supply systems (comprising reservoirs, pumps, conduits, seals etc.) coupled to bore 122 via suitable enclosures or conduits. Accordingly, a fluid is capable of being delivered to grooves 121a, 121b via supply conduits 120, 208 to lubricate the interface between shaft surface 200 and sleeve surface 201. Such an arrangement facilitates both a slide mounting of sleeve 124 and imparts a radial expansion force (to sleeve 124) to promote sleeve demounting.

According to further specific embodiments, shaft region 113 may be devoid of conduit 120 such that sleeve 124 comprises a conduit bore extending through sleeve wall 203 in fluid communication with grooves 121a, 121b and/or channel 208.

Claims

1. A gyratory crusher main shaft (107) comprising:

a shaft body having a radially outward facing external surface (200) and having a first end (118) for positioning at a lower region of the crusher and a second end (123) for positioning at an upper region of the crusher relative to the first end (118);

an axial region (113) of the shaft body extending from the second end (123) is tapered relative to a longitudinal axis (115) of the shaft body such that a cross sectional area of the shaft body at the tapered region (113) decreases in a direction from the first end (118) to the second end (123), the tapered region (113) configured to mount a shaft sleeve (124);

characterised by:

at least one groove (121) indented at the external surface (200) and positioned at the tapered region (113) and capable of receiving a pressurised fluid to facilitate mounting and dismounting of the sleeve (124) at the shaft body.

2. The main shaft as claimed in claim 1 further comprising a fluid inlet conduit (120) extending axially from the second end (123) and provided in fluid communication with the groove (121) to allow a fluid to be supplied to the groove (121) from the second end (123).

3. The main shaft as claimed in claim 2 wherein the conduit (120) extends internally within the shaft body such that a part (205) of the conduit (120) extends radially outward to the groove (121).

4. The main shaft as claimed in claim 3 wherein the groove (121) extends in a circumferential direction around the shaft body.

5. The main shaft as claimed in claim 4 wherein the groove (121) extends substantially completely circumferentially around the shaft body.

6. The main shaft as claimed in claim 5 comprising a plurality of grooves (121a, 121b) at the external surface (200).

7. The apparatus as claimed in claim 6 comprising a first groove (121a) extending in a circumferential direction around the shaft body and second groove (121b) extending in a circumferential direction around the shaft body, the first groove (121a) separated axially from the second groove (121b) and coupled in fluid communication.

8. The main shaft as claimed in claim 7 wherein at least a part of the conduit (120) is indented and extends axially at the external surface (200) as a channel (208) to couple the first (121a) and second (121b) grooves in fluid communication.

9. A gyratory crusher main shaft assembly comprising:

a shaft body as claimed in any preceding claim;

a sleeve (124) fitted over the tapered region (113), the sleeve (124) having a tapered wall thickness such that a wall thickness at a second upper end (215) of the sleeve (124) is greater than a wall thickness at a first lower end (216) of the sleeve(124).

10. The assembly as claimed in claim 9 further comprising an end retainer (125) releasably mounted at the second end (123) of a shaft body and having a perimeter region (209) extending radially outward beyond the external surface (200) at the tapered region (113), the perimeter region (209) positioned to radially overlap the sleeve (124) at the second end (215) of the sleeve (124) to inhibit axial separation of the sleeve (124) from the shaft body.

11. The assembly as claimed in claim 10 wherein the retainer (125) comprises a disc-like configuration having a recess (210) extending circumferentially at the perimeter region (209) to allow axial movement of the sleeve (124) into the recess (210).

12. The assembly as claimed in any one of claims 9 to 11 further comprising a fluid inlet conduit (120) extending axially from the second end (123) of the shaft body in fluid communication with the groove (121) to allow a fluid to be supplied to the groove (121) from the second end (123).

13. The assembly as claimed in any one of claims 9 to 11 further comprising a fluid inlet conduit extending radially through the wall (203) of the sleeve (124) in fluid communication with the groove (121) to allow a fluid to be supplied to the groove (121) through the sleeve (124).

5

14. A gyratory crusher comprising a main shaft or main shaft assembly as claimed in any preceding claim.

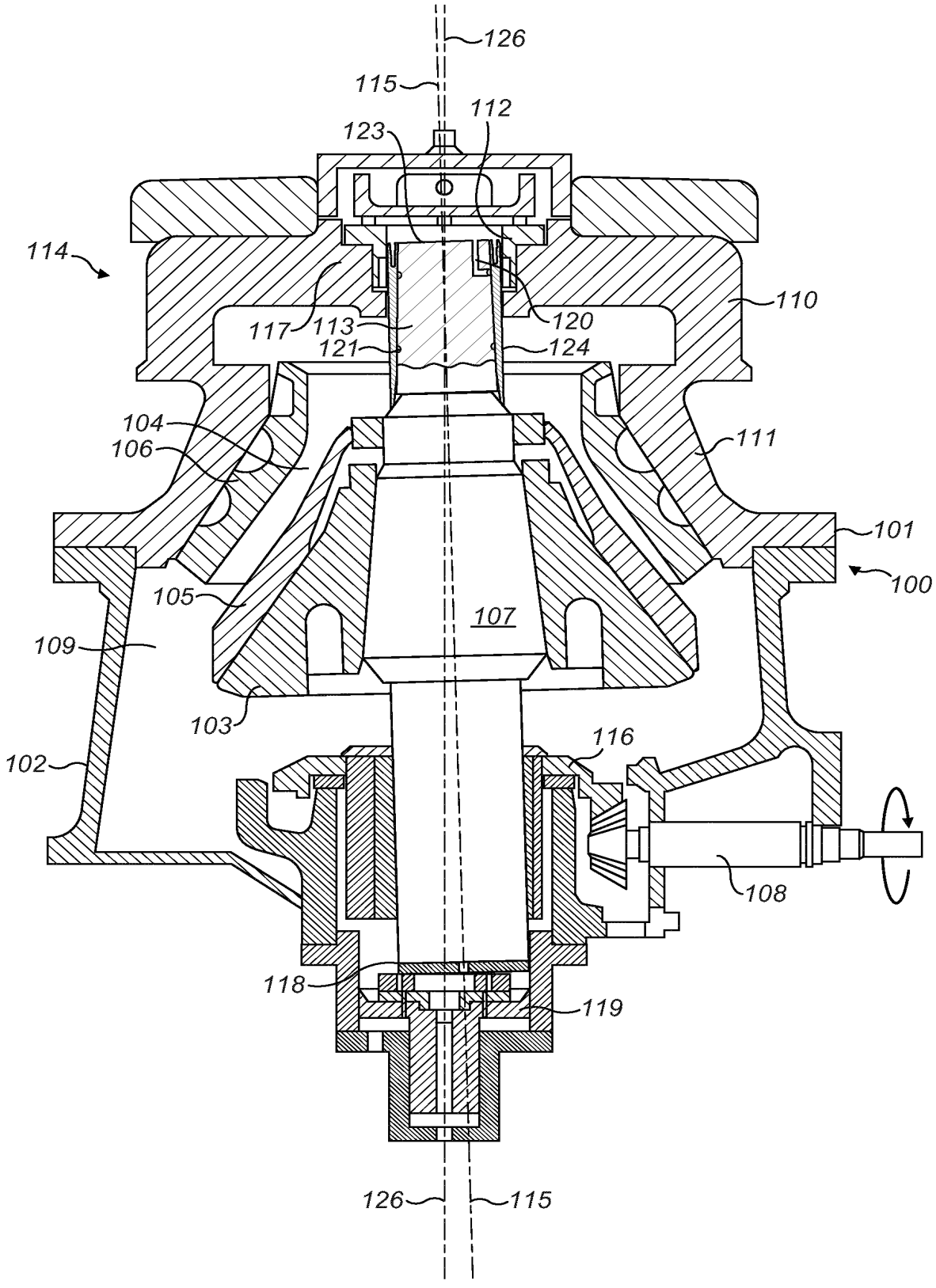
126
115
112
123
114
110
117
113
120
121
124
104
106
111
101
100
105
107
109
103
116
102
108
118
119
126
115

FIG. 1

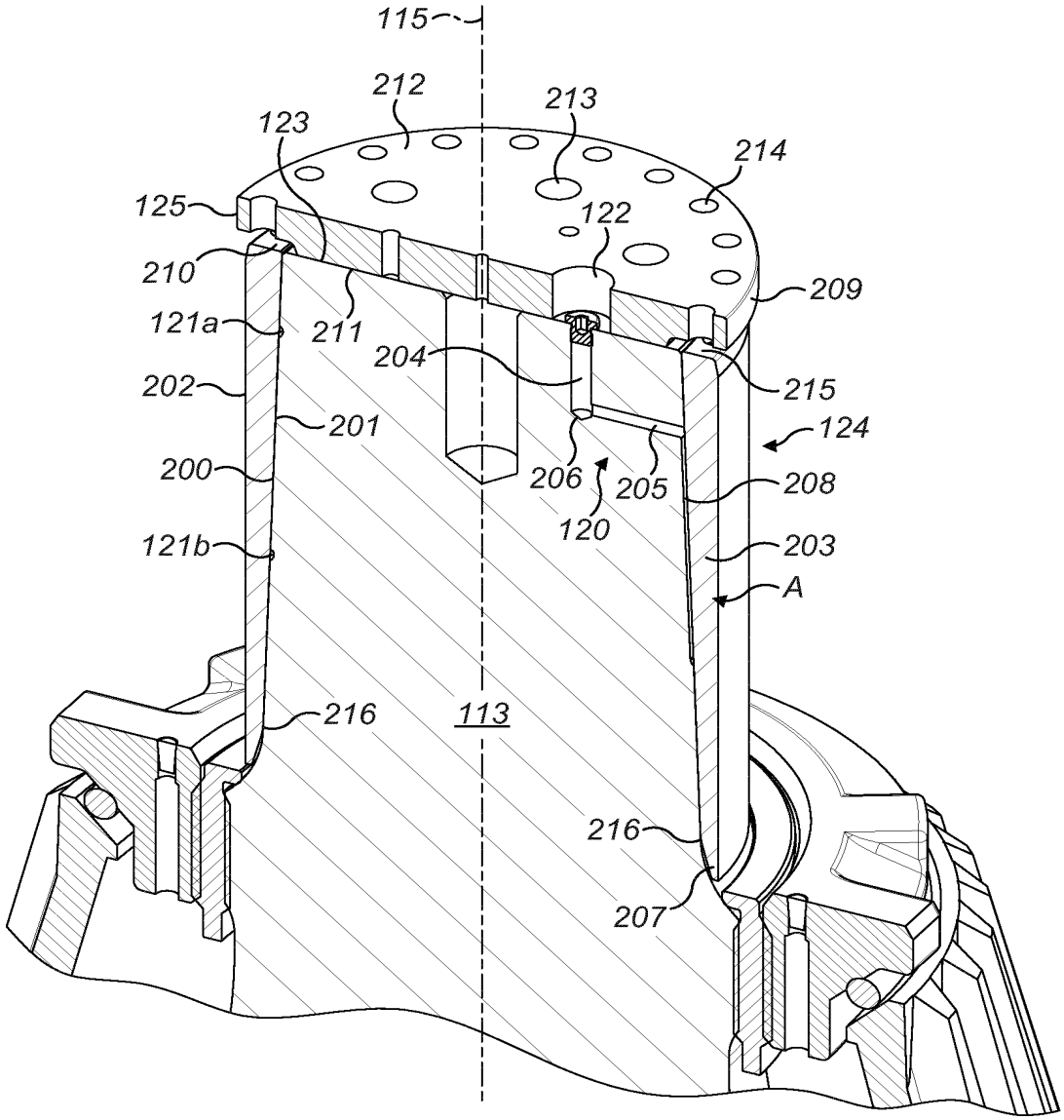
115
212
213
123
214
125
122
210
209
121a
211
204
202
215
201
124
200
206
205
208
120
121b
203
A
216
113
216
207

FIG. 2

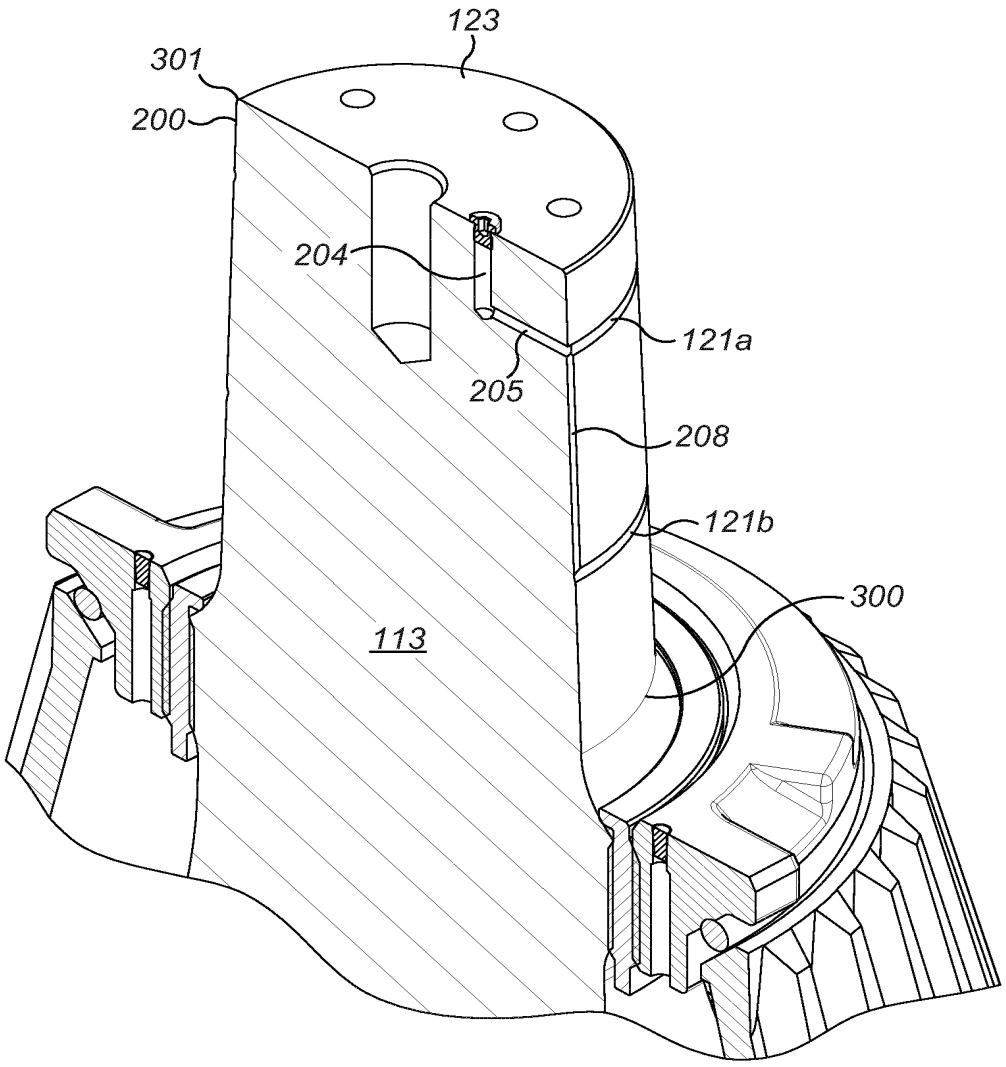

FIG. 3

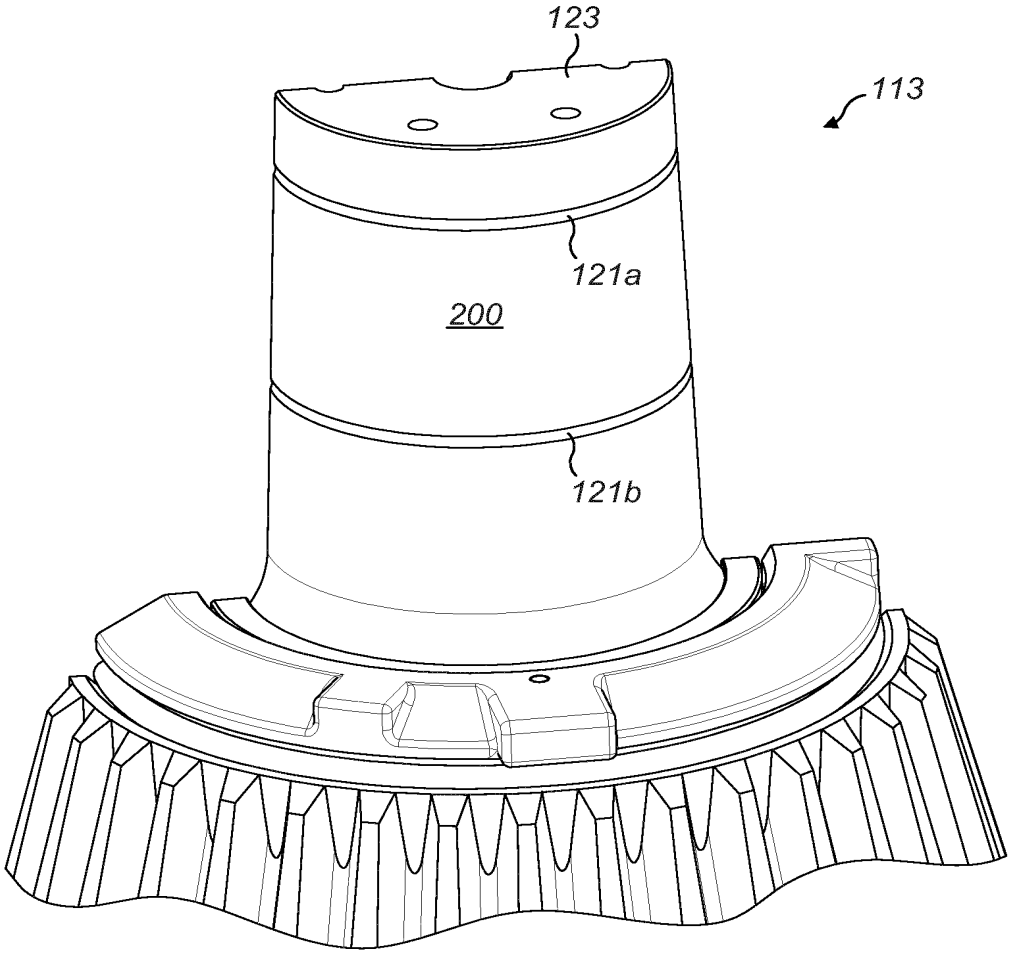

FIG. 4

INTERNATIONAL SEARCH REPORT

International application No
PCT/EP2014/060594

A. CLASSIFICATION OF SUBJECT MATTER
INV. B02C2/06
ADD.

According to International Patent Classification (IPC) or to both national classification and IPC

B. FIELDS SEARCHED

Minimum documentation searched (classification system followed by classification symbols)
B02C

Documentation searched other than minimum documentation to the extent that such documents are included in the fields searched

Electronic data base consulted during the international search (name of data base and, where practicable, search terms used)
EPO-Internal, WPI Data

C. DOCUMENTS CONSIDERED TO BE RELEVANT

Category*	Citation of document, with indication, where appropriate, of the relevant passages	Relevant to claim No.
X	US 2002/088885 A1 (VAN MULLEM ALBERT J [US] ET AL) 11 July 2002 (2002-07-11) page 1, left-hand column, paragraph 1 page 1, right-hand column, paragraph 17 page 2, left-hand column, paragraph 24 figures 1,2	1-14
Y	US 3 813 047 A (TORRENCE J ET AL) 28 May 1974 (1974-05-28) column 1, line 6 - line 8 column 3, line 40 - column 5, line 41 figures 1-4	1-14
Y	FR 2 492 022 A1 (ACIERS OUTILLAGES EQUIP INDLS [FR]) 16 April 1982 (1982-04-16) the whole document	1-14

-/--

[X] Further documents are listed in the continuation of Box C.

[X] See patent family annex.

* Special categories of cited documents :

"A" document defining the general state of the art which is not considered to be of particular relevance

"E" earlier application or patent but published on or after the international filing date

"L" document which may throw doubts on priority claim(s) or which is cited to establish the publication date of another citation or other special reason (as specified)

"O" document referring to an oral disclosure, use, exhibition or other means

"P" document published prior to the international filing date but later than the priority date claimed

"T" later document published after the international filing date or priority date and not in conflict with the application but cited to understand the principle or theory underlying the invention

"X" document of particular relevance; the claimed invention cannot be considered novel or cannot be considered to involve an inventive step when the document is taken alone

"Y" document of particular relevance; the claimed invention cannot be considered to involve an inventive step when the document is combined with one or more other such documents, such combination being obvious to a person skilled in the art

"&" document member of the same patent family

Date of the actual completion of the international search	Date of mailing of the international search report
31 July 2014	11/08/2014

Name and mailing address of the ISA/	Authorized officer
European Patent Office, P.B. 5818 Patentlaan 2 NL - 2280 HV Rijswijk Tel. (+31-70) 340-2040, Fax: (+31-70) 340-3016	Redelsperger, C

1

Form PCT/ISA/210 (second sheet) (April 2005)

INTERNATIONAL SEARCH REPORT

International application No
PCT/EP2014/060594

C(Continuation). DOCUMENTS CONSIDERED TO BE RELEVANT

Category*	Citation of document, with indication, where appropriate, of the relevant passages	Relevant to claim No.
X	FR 531 391 A (SMITH ENGINEERING WORKS) 11 January 1922 (1922-01-11) page 1, left-hand column, line 1 - line 4 page 2, right-hand column, line 53 - line 94 figure 1 -----	1,9,14
X	US 3 456 889 A (BURKHARDT EDGAR S ET AL) 22 July 1969 (1969-07-22) column 1, line 33 - line 35 column 3, line 38 - line 46 column 4, line 1 - line 13 figure 1 -----	1,9,14

1

INTERNATIONAL SEARCH REPORT

Information on patent family members

International application No
PCT/EP2014/060594

Patent document cited in search report	Publication date	Patent family member(s)	Publication date
US 2002088885 A1	11-07-2002	NONE	
US 3813047 A	28-05-1974	NONE	
FR 2492022 A1	16-04-1982	NONE	
FR 531391 A	11-01-1922		
US 3456889 A	22-07-1969	BE 713488 A	10-10-1968
		DE 1757208 A1	08-04-1971
		FR 1569863 A	06-06-1969
		GB 1157785 A	09-07-1969
		SE 342989 B	28-02-1972
		US 3456889 A	22-07-1969

From the INTERNATIONAL BUREAU

PCT

SECOND AND SUPPLEMENTARY NOTICE INFORMING THE APPLICANT OF THE COMMUNICATION OF THE INTERNATIONAL APPLICATION (TO DESIGNATED OFFICES WHICH APPLY THE 30 MONTH TIME LIMIT UNDER ARTICLE 22(1))

(PCT Rule 47.1(c))

To:

HAMMARSJÖ, Joakim
Sandvik Intellectual Property AB
S-811 81 Sandviken
SUEDE

Date of mailing *(day/month/year)*	
17 March 2016 (17.03.2016)	

Applicant's or agent's file reference	
PE 14208WO	IMPORTANT NOTICE

International application No.	International filing date *(day/month/year)*	Priority date *(day/month/year)*
PCT/EP2014/060594	23 May 2014 (23.05.2014)	12 November 2013 (12.11.2013)

Applicant

SANDVIK INTELLECTUAL PROPERTY AB

1. **ATTENTION**: For any designated Office(s), for which the time limit under Article 22(1), as in force from 1 April 2002 (30 months from the priority date), **does not apply**, please see Form PCT/IB/308(First Notice) issued previously.

2. Notice is hereby given that the following designated Office(s), for which the time limit under Article 22(1), as in force from 1 April 2002, **does apply**, has/have requested that the communication of the international application, as provided for in Article 20, be effected under Rule 93*bis*.1. The International Bureau has effected that communication on the date indicated below:
21 May 2015 (21.05.2015)

AZ, BY, CN, EP, HU, KG, KP, KR, MD, MK, MZ, NA, NG, PG, RU, SY, TM

In accordance with Rule 47.1(*c-bis*)(i), those Offices will accept the present notice as conclusive evidence that the communication of the international application has duly taken place on the date of mailing indicated above and no copy of the international application is required to be furnished by the applicant to the designated Office(s).

3. The following designated Offices, for which the time limit under Article 22(1), as in force from 1 April 2002, **does apply**, have not requested, as at the time of mailing of the present notice, that the communication of the international application be effected under Rule 93*bis*.1 :

AE, AG, AL, AM, AO, AP, AT, AU, BA, BB, BG, BH, BN, BR, BW, BZ, CA, CH, CL, CO, CR, CU, CZ, DE, DK, DM, DO, DZ, EA, EC, EE, EG, ES, FI, GB, GD, GE, GH, GM, GT, HN, HR, ID, IL, IN, IR, IS, JP, KE, KN, KZ, LA, LC, LK, LR, LS, LT, LY, MA, ME, MG, MN, MW, MX, MY, NI, NO, NZ, OA, OM, PA, PE, PH, PL, PT, QA, RO, RS, RW, SA, SC, SD, SE, SG, SK, SL, SM, ST, SV, TH, TJ, TN, TR, TT, UA, US, UZ, VC, VN, ZA, ZM, ZW

In accordance with Rule 47.1(*c-bis*)(ii), those Offices accept the present notice as conclusive evidence that the Contracting State for which that Office acts as a designated Office does not require the furnishing, under Article 22, by the applicant of a copy of the international application.

4. **TIME LIMITS for entry into the national phase**

For the designated or elected Office(s) listed above, the applicable time limit for entering the national phase will, **subject to what is said in the following paragraph,** be **30 MONTHS** from the priority date.

In practice, **time limits other than the 30-month time limit** will continue to apply, for various periods of time, in respect of certain of the designated or elected Office(s) listed above. For **regular updates on the applicable time limits** (30 or 31 months, or other time limit), Office by Office, refer to the *PCT Gazette*, the *PCT Newsletter* and the *PCT Applicant's Guide*, Volume II, National Chapters, all available from WIPO's Internet site, at http://www.wipo.int/pct/en/index.html.

It is the applicant's **sole responsibility** to monitor all these time limits.

The International Bureau of WIPO
34, chemin des Colombettes
1211 Geneva 20, Switzerland

Facsimile No. +41 22 338 82 70

Authorized officer

Agnès Wittmann-Regis

e-mail: pt06.pct@wipo.int

PATENT
ATTORNEY DOCKET NO.: SC 14208WOUS

IN THE UNITED STATES PATENT AND TRADEMARK OFFICE

In re Patent Application of	)	
	)	
Axel BERGMAN et al	)	Confirmation No.: Unassigned
	)	
Application No.:	)	
NEW National Stage of	)	
PCT Application No. PCT/EP2014/060594	)	Examiner: Unassigned
Filed: May 23, 2014	)	
	)	
Filed: May 11, 2016	)	
	)	Group Art Unit: Unassigned
For: GYRATORY CRUSHER MAIN SHAFT AND ASSEMBLY	)	

MAIL STOP PCT
Commissioner for Patents
P.O. Box 1450
Alexandria, VA 22313

PRELIMINARY AMENDMENT

Sir:

Prior to examination of the above-identified application, please amend the application as follows:

Amendments to the Claims begin on page 2 of this paper.

Amendments to the Abstract begin on page 6 of this paper.

Amendments to the Specification begin on page 7 of this paper.

Remarks begin on page 8 of this paper.

Amendments to the Claims:

This listing of claims will replace all prior versions, and listings, of claims in the application.

Please amend the claims as follows:

1. (Currently Amended) A gyratory crusher main shaft ~~(107)~~ of a crusher comprising:

a shaft body having a radially outward facing external surface ~~(200)~~ ~~and having~~, a first end ~~(118)~~ for positioning at a lower region of the crusher and a second end ~~(123)~~ for positioning at an upper region of the crusher relative to the first end ~~(118)~~;

an axial region ~~(113)~~ of the shaft body extending from the second end ~~(123)~~ ~~is~~ being tapered relative to a longitudinal axis ~~(115)~~ of the shaft body such that a cross sectional area of the shaft body at the tapered axial region ~~(113)~~ decreases in a direction from the first end ~~(118)~~ to the second end ~~(123)~~, the tapered axial region ~~(113)~~ being configured to mount a shaft sleeve ~~(124)~~; and

~~characterised by:~~

at least one groove ~~(121)~~ indented at the external surface ~~(200)~~ and positioned at the tapered axial region ~~(113)~~ ~~and capable of receiving~~ , the at least one groove being arranged to receive a pressurised fluid to facilitate mounting and dismounting of the sleeve ~~(124)~~ at the shaft body.

2. (Currently Amended) The main shaft as claimed in claim 1, further comprising a fluid inlet conduit ~~(120)~~ extending axially from the second end ~~(123)~~ and provided in fluid communication with the groove ~~(121)~~ to allow a fluid to be supplied to the groove ~~(121)~~ from the second end ~~(123)~~.

3. (Currently Amended) The main shaft as claimed in claim 2, wherein the conduit ~~(120)~~ extends internally within the shaft body such that a part ~~(205)~~ of the conduit ~~(120)~~ extends radially outward to the groove ~~(121)~~.

4. (Currently Amended) The main shaft as claimed in claim 3, wherein the groove ~~(121)~~ extends in a circumferential direction around the shaft body.

5. (Currently Amended) The main shaft as claimed in claim 4, wherein the groove ~~(121)~~ extends substantially completely circumferentially around the shaft body.

6. (Currently Amended) The main shaft as claimed in claim 5, further comprising a plurality of grooves ~~(121a, 121b)~~ at the external surface ~~(200)~~.

7. (Currently Amended) The apparatus as claimed in claim 6, further comprising a first groove ~~(121a)~~ extending in a circumferential direction around the shaft body and a second groove ~~(121b)~~ extending in a circumferential direction around the shaft body, the first groove ~~(121a)~~ being separated axially from the second groove ~~(121b)~~ and coupled in fluid communication.

8. (Currently Amended) The main shaft as claimed in claim 7, wherein at least a part of the conduit ~~(120)~~ is indented and extends axially at the external surface ~~(200)~~ as a channel ~~(208)~~ to couple the first ~~(121a)~~ and second ~~(121b)~~ grooves in fluid communication.

9. (Currently Amended) A gyratory crusher main shaft assembly for a crusher comprising:

a shaft body ~~as claimed in any preceding claim~~ having a radially outward facing external surface, a first end for positioning at a lower region of the crusher and a second end for positioning at an upper region of the crusher relative to the first end, an axial region of the shaft body extending from the second end and being tapered relative to a longitudinal axis of the shaft body such that a cross sectional area of the shaft body at the tapered axial region decreases in a direction from the first end to the second end, the tapered axial region being configured to mount a shaft sleeve, and at least one groove indented at the external surface and positioned at the tapered axial region, the at least one groove being arranged to receive a pressurised fluid to facilitate mounting and dismounting of the sleeve at the shaft body; and

a sleeve ~~(124)~~ fitted over the tapered axial region ~~(113)~~, the sleeve ~~(124)~~ having a tapered wall thickness such that a wall thickness at a second upper end ~~(215)~~ of the sleeve ~~(124)~~ is greater than a wall thickness at a first lower end ~~(216)~~ of the sleeve~~(124)~~.

10. (Currently Amended) The assembly as claimed in claim 9, further comprising an end retainer ~~(125)~~ releasably mounted at the second end ~~(123~~) of a shaft body and having a perimeter region ~~(209)~~ extending radially outward beyond the external surface ~~(200)~~ at the tapered region ~~(113)~~, the perimeter region ~~(209)~~ positioned to radially overlap the sleeve ~~(124)~~ at the second end ~~(215)~~ of the sleeve ~~(124)~~ to inhibit axial separation of the sleeve ~~(124)~~ from the shaft body.

11. (Currently Amended) The assembly as claimed in claim 10, wherein the retainer ~~(125) comprises~~ includes a disc-like configuration having a recess ~~(210)~~ extending circumferentially at the perimeter region ~~(209)~~ to allow axial movement of the sleeve ~~(124)~~ into the recess ~~(210)~~.

12. (Currently Amended) The assembly as claimed in ~~any one of claims~~ claim 9 ~~to 11~~, further comprising a fluid inlet conduit ~~(120)~~ extending axially from the second end ~~(123)~~ of the shaft body in fluid communication with the groove ~~(121)~~ to allow a fluid to be supplied to the groove ~~(121)~~ from the second end ~~(123)~~.

13. (Currently Amended) The assembly as claimed in ~~any one of claims~~ claim 9 ~~to 11,~~ further comprising a fluid inlet conduit extending radially through the wall ~~(203)~~ of the sleeve ~~(124)~~ in fluid communication with the groove ~~(121)~~ to allow a fluid to be supplied to the groove ~~(121)~~ through the sleeve ~~(124)~~.

14. (Currently Amended) A gyratory crusher comprising;

a main shaft ~~or main shaft~~ assembly ~~as claimed in any preceding claim~~ including a shaft body having a radially outward facing external surface, a first end for positioning at a lower region of the crusher and a second end for positioning at an upper region of the crusher relative to the first end, an axial region of the shaft body extending from the second end and being tapered relative to a longitudinal axis of the shaft body such that a cross sectional area of the shaft body at the tapered axial region decreases in a direction from the first end to the second end, the tapered axial region being configured to mount a shaft sleeve, and at least one groove indented at the external surface and positioned at the tapered axial region, the at least one groove being arranged to receive a pressurised fluid to facilitate mounting and dismounting of the sleeve at the shaft body; and a sleeve fitted over the tapered axial region, the sleeve having a tapered wall thickness such that a wall thickness at a second upper end of the sleeve is greater than a wall thickness at a first lower end of the sleeve.

.

Amendments to the Abstract

Please delete the Abstract in its entirety and replace it with the following:

A gyratory crusher main shaft assembly has a main shaft, an axially upper region of the main shaft including a tapered conical section with a protective sleeve friction fitted over the cone. To facilitate mounting and dismounting of the sleeve, at least one groove is indented within a radially external facing surface of the main shaft at the region of the cone to allow fluid to be introduced under pressure to the region between the sleeve and the cone.

Amendments to the Specification

Please amend the specification as follows:

On page 1 after the Title, please insert the following:

Related Application Data

This application is a §371 National Stage Application of PCT International Application No. PCT/EP2014/060594 filed May 23, 2014 claiming priority of EP Application No. 13192402.9, filed November 12, 2013.

REMARKS

Claims 1-14 have been amended. A new Abstract has been submitted. The specification has been amended to include Related Application Data. Accordingly, claims 1-14 are currently pending.

Applicants have amended the claims to remove multiple dependencies and improve form. Applicants hereby assert that no new matter has been added.

Respectfully submitted,

/Corinne Gorski/

Corinne Gorski
Registration No. 34,339

Sandvik/Diamond Innovations, Inc.
6325 Huntley Road
Worthington, OH 43085
Tel. 703-505-4761

Doc code: IDS
Doc description: Information Disclosure Statement (IDS) Filed

PTO/SB/08a (01-10)
Approved for use through 07/31/2012. OMB 0651-0031
U.S. Patent and Trademark Office; U.S. DEPARTMENT OF COMMERCE
Under the Paperwork Reduction Act of 1995, no persons are required to respond to a collection of information unless it contains a valid OMB control number.

INFORMATION DISCLOSURE STATEMENT BY APPLICANT

(Not for submission under 37 CFR 1.99)

Application Number	
Filing Date	
First Named Inventor	BERGMAN
Art Unit	
Examiner Name	
Attorney Docket Number	SC 14208WOUS

U.S.PATENTS Remove

Examiner Initial*	Cite No	Patent Number	Kind Code[1]	Issue Date	Name of Patentee or Applicant of cited Document	Pages,Columns,Lines where Relevant Passages or Relevant Figures Appear
	1	1402255	A	1922-01-03	SANBORN	
	2	1592313	A	1925-06-04	SYMONS	
	3	1748102	A	1930-02-25	BERNHARD	
	4	4027825	A	1977-06-07	COXHILL	
	5	5934583	A	1999-08-10	JEAN	
	6	3813047	A	1974-05-28	TORRENCE ET AL	
	7	3456889	A	1969-07-22	BURKHARDT ET AL	

If you wish to add additional U.S. Patent citation information please click the Add button. Add

U.S.PATENT APPLICATION PUBLICATIONS Remove

INFORMATION DISCLOSURE STATEMENT BY APPLICANT

(Not for submission under 37 CFR 1.99)

Application Number	
Filing Date	
First Named Inventor	BERGMAN
Art Unit	
Examiner Name	
Attorney Docket Number	SC 14208WOUS

Examiner Initial*	Cite No	Publication Number	Kind Code[1]	Publication Date	Name of Patentee or Applicant of cited Document	Pages,Columns,Lines where Relevant Passages or Relevant Figures Appear
	1	20020088885	A1	2002-07-11	VAN MULLEM ET AL	

If you wish to add additional U.S. Published Application citation information please click the Add button. Add

FOREIGN PATENT DOCUMENTS Remove

Examiner Initial*	Cite No	Foreign Document Number[3]	Country Code[2] i	Kind Code[4]	Publication Date	Name of Patentee or Applicant of cited Document	Pages,Columns,Lines where Relevant Passages or Relevant Figures Appear	T[5]
	1	718160	SU	A1	1980-02-28	MUJZEMNEK		☓
	2	940837	SU	A1	1982-07-07	FEDOROV		☒
	3	2492022	FR	A1	1982-04-16	ACIERS OUTILLAGES EQUIP INDLS		☒
	4	531391	FR	A	1922-01-11	SMITH ENGINEERING WORKS		☒

If you wish to add additional Foreign Patent Document citation information please click the Add button Add

NON-PATENT LITERATURE DOCUMENTS Remove

Examiner Initials*	Cite No	Include name of the author (in CAPITAL LETTERS), title of the article (when appropriate), title of the item (book, magazine, journal, serial, symposium, catalog, etc), date, pages(s), volume-issue number(s), publisher, city and/or country where published.	T[5]
	1		

If you wish to add additional non-patent literature document citation information please click the Add button Add

INFORMATION DISCLOSURE STATEMENT BY APPLICANT (Not for submission under 37 CFR 1.99)		
	Application Number	
	Filing Date	
	First Named Inventor	BERGMAN
	Art Unit	
	Examiner Name	
	Attorney Docket Number	SC 14208WOUS

EXAMINER SIGNATURE			
Examiner Signature		Date Considered	

*EXAMINER: Initial if reference considered, whether or not citation is in conformance with MPEP 609. Draw line through a citation if not in conformance and not considered. Include copy of this form with next communication to applicant.

[1] See Kind Codes of USPTO Patent Documents at www.USPTO.GOV or MPEP 901.04. [2] Enter office that issued the document, by the two-letter code (WIPO Standard ST.3). [3] For Japanese patent documents, the indication of the year of the reign of the Emperor must precede the serial number of the patent document. [4] Kind of document by the appropriate symbols as indicated on the document under WIPO Standard ST.16 if possible. [5] Applicant is to place a check mark here if English language translation is attached.

INFORMATION DISCLOSURE STATEMENT BY APPLICANT (Not for submission under 37 CFR 1.99)		
	Application Number	
	Filing Date	
	First Named Inventor	BERGMAN
	Art Unit	
	Examiner Name	
	Attorney Docket Number	SC 14208WOUS

CERTIFICATION STATEMENT

Please see 37 CFR 1.97 and 1.98 to make the appropriate selection(s):

That each item of information contained in the information disclosure statement was first cited in any communication from a foreign patent office in a counterpart foreign application not more than three months prior to the filing of the information disclosure statement. See 37 CFR 1.97(e)(1).

OR

☐ That no item of information contained in the information disclosure statement was cited in a communication from a foreign patent office in a counterpart foreign application, and, to the knowledge of the person signing the certification after making reasonable inquiry, no item of information contained in the information disclosure statement was known to any individual designated in 37 CFR 1.56(c) more than three months prior to the filing of the information disclosure statement. See 37 CFR 1.97(e)(2).

See attached certification statement.

The fee set forth in 37 CFR 1.17 (p) has been submitted herewith.

A certification statement is not submitted herewith.

SIGNATURE

A signature of the applicant or representative is required in accordance with CFR 1.33, 10.18. Please see CFR 1.4(d) for the form of the signature.

Signature	/Corinne Gorski/	Date (YYYY-MM-DD)	2016-05-11
Name/Print	Corinne Gorski	Registration Number	34339

This collection of information is required by 37 CFR 1.97 and 1.98. The information is required to obtain or retain a benefit by the public which is to file (and by the USPTO to process) an application. Confidentiality is governed by 35 U.S.C. 122 and 37 CFR 1.14. This collection is estimated to take 1 hour to complete, including gathering, preparing and submitting the completed application form to the USPTO. Time will vary depending upon the individual case. Any comments on the amount of time you require to complete this form and/or suggestions for reducing this burden, should be sent to the Chief Information Officer, U.S. Patent and Trademark Office, U.S. Department of Commerce, P.O. Box 1450, Alexandria, VA 22313-1450. DO NOT SEND FEES OR COMPLETED FORMS TO THIS ADDRESS. **SEND TO: Commissioner for Patents, P.O. Box 1450, Alexandria, VA 22313-1450.**

Privacy Act Statement

The Privacy Act of 1974 (P.L. 93-579) requires that you be given certain information in connection with your submission of the attached form related to a patent application or patent. Accordingly, pursuant to the requirements of the Act, please be advised that: (1) the general authority for the collection of this information is 35 U.S.C. 2(b)(2); (2) furnishing of the information solicited is voluntary; and (3) the principal purpose for which the information is used by the U.S. Patent and Trademark Office is to process and/or examine your submission related to a patent application or patent. If you do not furnish the requested information, the U.S. Patent and Trademark Office may not be able to process and/or examine your submission, which may result in termination of proceedings or abandonment of the application or expiration of the patent.

The information provided by you in this form will be subject to the following routine uses:

1. The information on this form will be treated confidentially to the extent allowed under the Freedom of Information Act (5 U.S.C. 552) and the Privacy Act (5 U.S.C. 552a). Records from this system of records may be disclosed to the Department of Justice to determine whether the Freedom of Information Act requires disclosure of these record s.

2. A record from this system of records may be disclosed, as a routine use, in the course of presenting evidence to a court, magistrate, or administrative tribunal, including disclosures to opposing counsel in the course of settlement negotiations.

3. A record in this system of records may be disclosed, as a routine use, to a Member of Congress submitting a request involving an individual, to whom the record pertains, when the individual has requested assistance from the Member with respect to the subject matter of the record.

4. A record in this system of records may be disclosed, as a routine use, to a contractor of the Agency having need for the information in order to perform a contract. Recipients of information shall be required to comply with the requirements of the Privacy Act of 1974, as amended, pursuant to 5 U.S.C. 552a(m).

5. A record related to an International Application filed under the Patent Cooperation Treaty in this system of records may be disclosed, as a routine use, to the International Bureau of the World Intellectual Property Organization, pursuant to the Patent Cooperation Treaty.

6. A record in this system of records may be disclosed, as a routine use, to another federal agency for purposes of National Security review (35 U.S.C. 181) and for review pursuant to the Atomic Energy Act (42 U.S.C. 218(c)).

7. A record from this system of records may be disclosed, as a routine use, to the Administrator, General Services, or his/her designee, during an inspection of records conducted by GSA as part of that agency's responsibility to recommend improvements in records management practices and programs, under authority of 44 U.S.C. 2904 and 2906. Such disclosure shall be made in accordance with the GSA regulations governing inspection of records for this purpose, and any other relevant (i.e., GSA or Commerce) directive. Such disclosure shall not be used to make determinations about individuals.

8. A record from this system of records may be disclosed, as a routine use, to the public after either publication of the application pursuant to 35 U.S.C. 122(b) or issuance of a patent pursuant to 35 U.S.C. 151. Further, a record may be disclosed, subject to the limitations of 37 CFR 1.14, as a routine use, to the public if the record was filed in an application which became abandoned or in which the proceedings were terminated and which application is referenced by either a published application, an application open to public inspections or an issued patent.

9. A record from this system of records may be disclosed, as a routine use, to a Federal, State, or local law enforcement agency, if the USPTO becomes aware of a violation or potential violation of law or regulation.

Patent Translate
Powered by EPO and Google

Notice

This translation is machine-generated. It cannot be guaranteed that it is intelligible, accurate, complete, reliable or fit for specific purposes. Critical decisions, such as commercially relevant or financial decisions, should not be based on machine-translation output.

DESCRIPTION SU940837

The upper support of the movable crushing cone cone crusher

Верхняя опора подвижного дробящего конуса конусной дробилки

This invention relates to cone crushers coarse crushing, namely to the movable upper assembly crushing cone bearing.

Изобретение относится к конусным дробилкам крупного дробления, а именно к узлу верхней опоры подвижного дробящего конуса.

Known upper support movable crushing cone crusher cone containing vtudki and bearing half-rings that are included in the shaft groove, the latter sit on the shaft with a gap that the crusher operation leads to mutual movement and wear the shaft sleeve and half-rings 1.

Известна верхняя опора подвижного дробящего конуса конусной дробилки, содержащая втудки и несущие полукольца, входящие в проточки вала, причем последние сидят на валу с зазором, что при работе дробилки приводит к взаимному перемещению и износу втулки вала и полуколец 1.

In its technical essence the closest: the proposed support is movable upper support cone crushing cone crusher coarse crushing with mechanical regulation of the discharge gap, comprising a split cone sleeve mounted coaxially on the shank of the movable cone shaft in the cage crosspiece 2.

По своей технической сущности наиболее близкой :к предлагаемой опоре является

верхняя опора подвижного дробящего конуса Конусной дробилки крупного дробления с механическим регулированием разгрузочной щели, содержащая разрезную конусную втулку, установленную соосно на хвостовике вала подвижного конуса в обойме траверсы 2.

In such a cone crusher is suspended from the chassis and the suspension traverse unit simultaneously performs the function of gap control. With the split taper bushing, screwed on the shank of the movable cone shaft, made its ascent or oouokanie that determines the size of the discharge gap between the cones. For this 1PODVIZHNY cone is lifted by crane, display back nut of the conical connection with a holder, knock out a wedge schponku and turning a nut on a few turns, dipped cone in place and hammer wedge shpon1ku. This unloading slot changes.

В таких дробилках конус подвешивается к корпусу траверсы и узел подвеса одновременно выполняет функцию регулирования щели. При помощи разрезной конусной втулки, навернутой на хвостовик вала подвижного конуса, осуществляется его подъем или ооуокание, что определяет размер разгрузочной щели между конусами. Для этого 1ПОДВИЖНЫЙ конус приподнимают краном, выводят резервную гайку из конического соединения с обоймой, выбивают клиновую щпонку и, повернув гайку на,несколько оборотов, опускают конус на место и забивают клиновую шпон1ку. При этом разгрузочная щель меняется.

The disadvantage of such a support is a failure of the main shaft, since the crusher there occurs a strong de10formatsiya of threads or partial interruption of the high napryal eny occurring in the thread of the sum of the forces of its own weight of the movable pin and the vertical component of the crushing reinforced in ko15nusnom compound vtori1chno and reinforced in the very thread is in a wedge, when crimping a split tapered bushing clip. The voltage in the coils of the main shaft, in contact with lower taper bushing raz20reznoy turns much higher than the rest of the turns in contact with it, due to the conical raznosteniosti parts: the lower part is compressed and split bush bol25sche significantly deformed than the top. As a result, the split bush deformed coils wedged and can not be rotated, so the sleeve is removed by cutting it apart. Broken off the threads on the main shaft are removed, and the deformed portion

---

Недостатком такой опоры является выход из строя главного вала, так как при работе дробилки происходит сильная де10формация витков резьбы или их частичный обрыв из-за высоких напрял ений, возникающих в резьбе от суммы сил собственного веса подвижного конуса и вертикальной составляющей дробления, усиленных в ко15нусном соединении и втори1чно усиленных в самой резьбе, как в клине, при обжатии разрезной конусной втулки обоймой. При этом напряжение в витках главного вала, контактирующих с нижними витками раз20резной конусной втулки, значительно выше, чем в остальных контактирующих с ней витках, из-за разностениости конусной части: в нижней части разрезная втулка сжимается и

деформируется значительно боль25ще, чем в верхней. В результате разрезная втулка заклинивается деформированными витками и ее невозможно повернуть, поэтому втулку снимают, разрезая ее на части. Обломанные витки резьбы на главном валу удаляют, а деформированную часть

thirty

30

corrected manually. Only after atoro main shaft again allowed to work with the new split bush. In the case of missteps Precipice screw shaft expensive discarded.

исправляют вручную. И только после atoro главный вал снова пускают в работу с новой разрезной втулкой. В случае оплошного Обрыва винтов дорогостоящий вал Выбраковывают.

The disadvantages of this support are also adjusting the crushing gap complexity associated with the fact that the regulation is done by hand to produce the desired torque via the lever to turn the split sleeve; schagovoe regulation, equal thread pitch of the main shaft, and control with smaller steps impossible since the split bush can be rotated on the shaft at least one oborotiz a mismatch keyways, and the increase in their number and weakens the already weak thread; difficulty in manufacturing, is the need to cut buttress thread on the surface of a heavy shaft of large diameter and length.

Недостатками этой опоры являются также трудоемкость регулирования разгрузочной щели, связанная с тем, что регулирование выполняется вручную для создания необходимого крутящего момента через рычаг с целью поворота разрезной втулки; щаговое регулирование, равное шагу резьбы главного вала, причем регулирование с меньшим шагом невозможно, так как разрезная втулка не может быть повернута на валу менее чем на один оборотиз-за несовпадения шпоночных пазов, а увеличение их числа ослабляет и без того слабую резьбу; сложность в изготовлении, заключается в необходимости нарезки упорной резьбы на поверхности тяжелого вала больших диаметра и длины.

The invention aims to improve the reliability of the upper support, simplify and ensure fine control of the discharge gap, reducing trudoemashsti repair.

Целью изобретения является повышение надежности верхней опоры, упрощение и

обеспечение тонкого регулирования разгрузочной щели, снижение трудоемашсти ремонта.

The aim is achieved in that in the upper support the mobility of the crusher head cone crusher coarse crushing with mechanical regulation of the discharge gap having a split cone sleeve mounted coaxially on the shank of the movable cone shaft in a cage yoke, the shank of the movable cone shaft is made with annular protoch.kami and snabl en mounted in one of the locking ring grooves, cutting simply supported on the end of the cone sleeve.

Цель достигается тем, что в верхней опоре подвижНого дробящего конуса конусной дробилки крупного дробления с механическим регулированием разгрузочной щели, содержащей разрезную конусную втулку, установленную соосно на хвостовике вала подвижного конуса в обойме траверсы, хвостовик вала подвижного конуса выполнен с кольцевыми проточ.ками и снабл ен установленным в одной из проточек стопорным кольцом, опертым на торец разрезной конусной втулки.

FIG. 1 izobral en general view of the upper Honore; FIG. 2 - the option to install the locking 1koltsa.

На фИг. 1 изобрал ен общий вид верхней оноры; на фиг. 2 - вариант установки стопорного 1кольца.

Upper support comprises owned movable cone shank of the main shaft 1 having a series of annular grooves 2, in each of which, depending upon the desired gap size is set sliced apart retaining kolytso 3, which can be accomplished with a shoulder 4 and set them up or down, drawing on a split tapered vtulit 5,

---

Верхняя опора содержит принадлежащий подвижному конусу хвостовик главного вала 1, имеющий ряд кольцевых проточек 2, в любой из которых в зависимости от требуемого размера щели установлено разрезанное на части стопорное колыцо 3, которое может быть выполнено с буртом 4 и устанавливается им вверх или вниз, опираясь на разрезную конусную втулиу 5,

in contact with the housing 6, which is based on the cone sleeve 7 and washer 8 9 traverses.

контактирующую с обоймой 6, опирающейся на конусную втулку 7 и шайбу 8 траверсы 9.

If necessary in order to achieve

При необходимости для достижения

maximum precision regulation of discharge slots, and between the ends tulki 5 and cut into pieces 3 rings placed promezhuto1chnye pads.

максимальной точности регулирования разгрузочной щел,и между торцами Ьтулки 5 и разрезанного на части кольца 3 ставятся промежуто1чные прокладки.

For controlling the gap shaft 1 lifted by a crane, removed cut into ring portion 3, it is set to the desired grooves 2 of the up or down collar 4 depending on the desired height of lifting or lowering the movable shaft 1

Для регулирования щели вал 1 поднимают краном, вынимают разрезанное на части кольцо 3, устанавливают его в нужную из проточек 2 вверх или вниз буртом 4 в зависимости от необходимой высоты подъема или опускания вала 1 подвижного

cone and then lowered into place.

конуса и после этого опускают его на место.

Replacement threaded coupling smooth cylindrical surfaces eliminates the failure of the mating parts

---

Замена резьбового сопряжения гладкими цилиндрическими поверхностями исключает выход из строя сопрягаемых деталей

and the accident rate for this reason.

и аварийность по этой причине.

When the upper support according to the invention is not treblyutsya investment of time and great efforts to control the gap, manual operation is reduced to only

---

При выполнении верхней опоры согласно изобретению не треблются затраты времени и большие усилия для регулирования щели, ручная операция сводится лишь к

Installation of the ring at the cut.

установке разрезанного на части кольца.

Claim

Формула изобретения

Upper support movable conical crusher head fractions / ki mechanical coarse crushing with the crushing gap regulation comprising slotted cone sleeve mounted coaxially on the shank of the shaft of the movable cage .traversy cone, characterized in that, in order to increase the reliability of the support and reducing the complexity of repairs the movable shaft cone shank formed with annular recesses provided and installed in one of the locking ring grooves, cutting simply supported on the end of the cone sleeve.

Верхняя опора подвижного дробящего конуса конусной дробил/ки крупного дробления с механическим регулированием разгрузочной щели, содержащая разрезную конусную втулку, установленную соосно на хвостовике вала подвижного конуса в обойме .траверсы, отличающаяся тем, что, с целью повышения надежности опоры и снижения трудоемкости ремонтных работ, хвостовик вала подвижного конуса выполнен с кольцевыми проточками и снабжен установленным в одной из проточек стопорным кольцом, опертым на торец разрезной конусной втулки.

The sources of information taken into consideration in the examination:

Источники информации, принятые во внимание при экспертизе:

1. Muyzemnek Yu Cone Crusher. M., "Mechanical Engineering, 1970, p. lOil.

---

1. Муйземнек Ю. А. Конусная дробилка. М., «Машиностроение, 1970, с. lOil.

2. Donchenko A. et al. Maintenance and repair of crushing equipment, M.,

2. Донченко А. С. и др. Эксплуатация и ремонт дробильного оборудования, М.,

"Nedra, 1972, p. 70.

«Недра, 1972, с. 70.

Союз Советских Социалистических Республик

Государственный комитет СССР по делам изобретений и открытий

ОПИСАНИЕ ИЗОБРЕТЕНИЯ

К АВТОРСКОМУ СВИДЕТЕЛЬСТВУ

(11) 940837

(61) Дополнительное к авт. свид-ву —

(22) Заявлено 10.04.78 (21) 2600511/29-33

(51) М.Кл.³ B 02 C 2/04

с присоединением заявки —

(23) Приоритет —

(43) Опубликовано 07.07.82. Бюллетень № 25

(53) УДК 621.926.3 (088.8)

(45) Дата опубликования описания 07.07.82

(72) Автор изобретения Г. В. Федоров

(71) Заявитель —

(54) ВЕРХНЯЯ ОПОРА ПОДВИЖНОГО ДРОБЯЩЕГО КОНУСА КОНУСНОЙ ДРОБИЛКИ

1

Изобретение относится к конусным дробилкам крупного дробления, а именно к узлу верхней опоры подвижного дробящего конуса.

Известна верхняя опора подвижного дробящего конуса конусной дробилки, содержащая втулки и несущие полукольца, входящие в проточки вала, причем последние сидят на валу с зазором, что при работе дробилки приводит к взаимному перемещению и износу втулки вала и полуколец [1].

По своей технической сущности наиболее близкой к предлагаемой опоре является верхняя опора подвижного дробящего конуса конусной дробилки крупного дробления с механическим регулированием разгрузочной щели, содержащая разрезную конусную втулку, установленную соосно на хвостовике вала подвижного конуса в обойме траверсы [2].

В таких дробилках конус подвешивается к корпусу траверсы и узел подвеса одновременно выполняет функцию регулирования щели. При помощи разрезной конусной втулки, навернутой на хвостовик вала подвижного конуса, осуществляется его подъем или опускание, что определяет размер разгрузочной щели между конусами. Для этого подвижный конус приподнимают краном, выводят резервную гайку из конического соединения с обоймой, выбивают клиновую шпонку и, повернув гайку на несколько оборотов, опускают конус на место и забивают клиновую шпонку. При этом разгрузочная щель меняется.

2

Недостатком такой опоры является выход из строя главного вала, так как при работе дробилки происходит сильная деформация витков резьбы или их частичный обрыв из-за высоких напряжений, возникающих в резьбе от суммы сил собственного веса подвижного конуса и вертикальной составляющей дробления, усиленных в конусном соединении и вторично усиленных в самой резьбе, как в клине, при обжатии разрезной конусной втулки обоймой. При этом напряжение в витках главного вала, контактирующих с нижними витками разрезной конусной втулки, значительно выше, чем в остальных контактирующих с ней витках, из-за разностенности конусной части: в нижней части разрезная втулка сжимается и деформируется значительно больше, чем в верхней. В результате разрезная втулка заклинивается деформированными витками и ее невозможно повернуть, поэтому втулку снимают, разрезая ее на части. Обломанные витки резьбы на главном валу удаляют, а деформированную часть

исправляют вручную. И только после этого главный вал снова пускают в работу с новой разрезной втулкой. В случае сплошного обрыва винтов дорогостоящий вал выбраковывают.

Недостатками этой опоры являются также трудоемкость регулирования разгрузочной щели, связанная с тем, что регулирование выполняется вручную для создания необходимого крутящего момента через рычаг с целью поворота разрезной втулки; шаговое регулирование, равное шагу резьбы главного вала, причем регулирование с меньшим шагом невозможно, так как разрезная втулка не может быть повернута на валу менее чем на один оборот из-за несовпадения шпоночных пазов, а увеличение их числа ослабляет и без того слабую резьбу; сложность в изготовлении, заключается в необходимости нарезки упорной резьбы на поверхности тяжелого вала больших диаметра и длины.

Целью изобретения является повышение надежности верхней опоры, упрощение и обеспечение тонкого регулирования разгрузочной щели, снижение трудоемкости ремонта.

Цель достигается тем, что в верхней опоре подвижного дробящего конуса конусной дробилки крупного дробления с механическим регулированием разгрузочной щели, содержащей разрезную конусную втулку, установленную соосно на хвостовике вала подвижного конуса в обойме траверсы, хвостовик вала подвижного конуса выполнен с кольцевыми проточками и снабжен установленным в одной из проточек стопорным кольцом, опертым на торец разрезной конусной втулки.

На фиг. 1 изображен общий вид верхней опоры; на фиг. 2 — вариант установки стопорного кольца.

Верхняя опора содержит принадлежащий подвижному конусу хвостовик главного вала 1, имеющий ряд кольцевых проточек 2, в любой из которых в зависимости от требуемого размера щели установлено разрезанное на части стопорное кольцо 3, которое может быть выполнено с буртом 4 и устанавливается им вверх или вниз, опираясь на разрезную конусную втулку 5, контактирующую с обоймой 6, опирающейся на конусную втулку 7 и шайбу 8 траверсы 9.

При необходимости для достижения максимальной точности регулирования разгрузочной щели между торцами втулки 5 и разрезанного на части кольца 3 ставятся промежуточные прокладки.

Для регулирования щели вал 1 поднимают краном, вынимают разрезанное на части кольцо 3, устанавливают его в нужную из проточек 2 вверх или вниз буртом 4 в зависимости от необходимой высоты подъема или опускания вала 1 подвижного конуса и после этого опускают его на место.

Замена резьбового сопряжения гладкими цилиндрическими поверхностями исключает выход из строя сопрягаемых деталей и аварийность по этой причине.

При выполнении верхней опоры согласно изобретению не требуются затраты времени и большие усилия для регулирования щели, ручная операция сводится лишь к установке разрезанного на части кольца.

Формула изобретения

Верхняя опора подвижного дробящего конуса конусной дробилки крупного дробления с механическим регулированием разгрузочной щели, содержащая разрезную конусную втулку, установленную соосно на хвостовике вала подвижного конуса в обойме траверсы, *отличающаяся* тем, что, с целью повышения надежности опоры и снижения трудоемкости ремонтных работ, хвостовик вала подвижного конуса выполнен с кольцевыми проточками и снабжен установленным в одной из проточек стопорным кольцом, опертым на торец разрезной конусной втулки.

Источники информации, принятые во внимание при экспертизе:

1. Муйземнек Ю. А. Конусная дробилка. М., «Машиностроение», 1970, с. 101.

2. Донченко А. С. и др. Эксплуатация и ремонт дробильного оборудования, М., «Недра», 1972, с. 70.

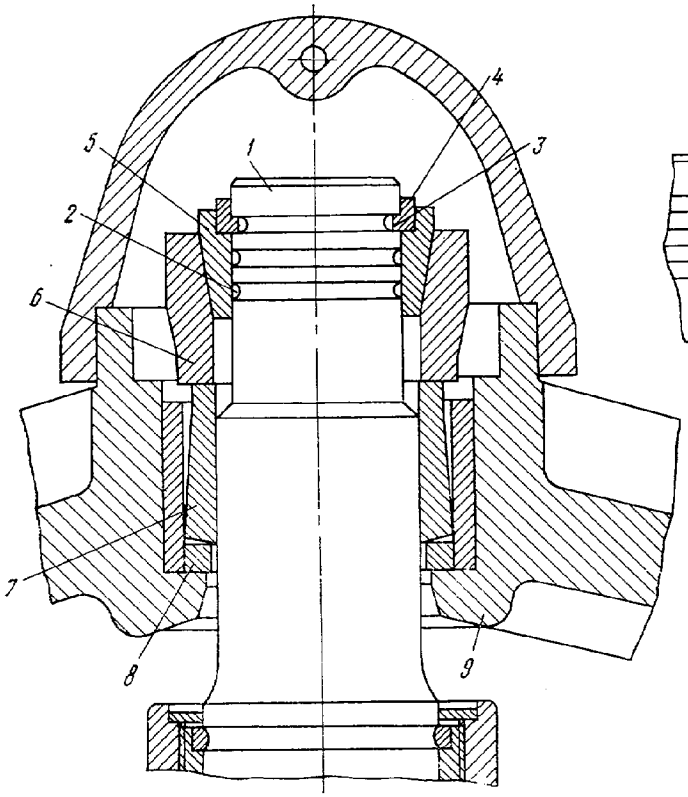

Фиг. 1

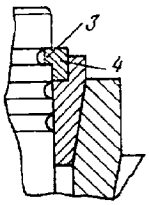

Фиг. 2

Составитель В. Губарев

Редактор З. Бородкина Техрд А. Камышникова Корректор С. Файн

Заказ 685/532 Изд. № 180 Тираж 643 Подписное
НПО «Поиск» Государственного комитета СССР по делам изобретений и открытий
113035, Москва, Ж-35, Раушская наб., д. 4/5

Тип. Харьк. фил. пред. «Патент»

Espacenet

Bibliographic data: FR2492022 (A1) — 1982-04-16

Temporary fixed connection of wheel to shaft - uses radial shaft expansion in pulley bore using conical hydraulic piston in thin-walled sleeve

Inventor(s): BRU DANIEL; CAUGANT ALAIN; DUSSERT CHRISTIAN ± (DANIEL BRU, ALAIN CAUGANT ET CHRISTIAN DUSSERT)

Applicant(s): ACIERS OUTILLAGES EQUIP INDLS [FR] ± (ACIERS OUTILLAGES EQUIP INDLS)

Classification: - international: ***F16D1/08; F16D1/091;*** (IPC1-7): F16D1/08
- cooperative: **F16D1/087**; **F16D1/091**; F16D2001/0903

Application number: FR19800021950 19801014

Priority number (s): FR19800021950 19801014

Also published as: FR2492022 (B1)

Abstract of FR2492022 (A1)

The rigid coupling may secure a pulley wheel (4) on a shaft (3), using the axial displacement of a conical piston (8) in a sleeve (5) of the complementary form to effect a radial expansion of the shaft once located in a pulley (4) bore. The conical interface (6) is lubricated and the displacement of the piston relative to the sleeve is brought about by hydraulic force. The piston and the sleeve are mounted in a hollowed out (2) portion of the shaft, and the former may have radial (8a) and axial (17,18,22) passages feeding fluid under pressure to circumferential grooves (15,16) and the conical interface. A circular length (7) of the sleeve bore may locate opposite a reduced circular length (9) of the piston to form a pressure chamber. The chamber may be sealed (14) and closed (11) by a composite ring which screws (12) into the sleeve.

RÉPUBLIQUE FRANÇAISE

INSTITUT NATIONAL
DE LA PROPRIÉTÉ INDUSTRIELLE

PARIS

(11) N° de publication : **2 492 022**
(A n'utiliser que pour les commandes de reproduction).

A1

DEMANDE DE BREVET D'INVENTION

(21) **N° 80 21950**

(54) **Dispositif d'accouplement rigide monté sous pression de fluide.**

(51) Classification internationale (Int. Cl.³). F 16 D 1/08.

(22) Date de dépôt..... 14 octobre 1980.
(33) (32) (31) Priorité revendiquée :

(41) Date de la mise à la disposition du public de la demande..... B.O.P.I. — « Listes » n° 15 du 16-4-1982.

(71) Déposant : Société anonyme dite : COMPAGNIE DES ACIERS, OUTILLAGES ET EQUIPEMENTS INDUSTRIELS, résidant en France.

(72) Invention de : Daniel Bru, Alain Caugant et Christian Dussert.

(73) Titulaire : *Idem* (71)

(74) Mandataire : Bureau D.A. Casalonga,
8, av. Percier, 75008 Paris.

BNSDOCID: <FR 2492022A1_I_>

Dispositif d'accouplement rigide monté sous pression de fluide.

La présente invention concerne un dispositif d'accouplement rigide pouvant être monté et démonté au moyen d'un fluide sous pression et permettant de réaliser une liaison de transmission de force entre un arbre cylindrique et une pièce présentant un alésage concentrique à l'arbre sans nécessiter aucun usinage spécial de l'un ou l'autre des éléments à assembler. La pièce présentant l'alésage et coopérant avec l'arbre peut être par exemple une poulie, un pignon etc. L'arbre comporte au moins une portion creuse qui peut être borgne dans certaines réalisations.

On connait déjà des assemblages mécaniques dans lesquels les éléments d'accouplements sont constitués par des bagues coniques fendues tel que décrit par exemple dans les brevets français 2 187 049 et 2 284 794. Le serrage des deux bagues coniques fendues et le déplacement relatif qui en résulte, se fait au moyen d'une pluralité de vis.

On constate que ces dispositifs présentent un certain nombre d'inconvénients, l'existence des fentes des bagues coniques entraînant notamment des risques accrus de corrosion. Par ailleurs, il est nécessaire d'exercer des efforts axiaux importants lors du montage ce qui nécessite l'utilisation d'un grand nombre de vis dont le serrage doit être réalisé de manière rigoureusement répartie et progressive. Compte tenu des difficultés lors du montage, on constate également de fréquents phénomènes de coincements qui peuvent même rendre le démontage impossible.

Pour remédier à ces inconvénients, on a déjà préconisé des accouplements assemblés à force au moyen d'un fluide sous pression. Le brevet US 3 531 146 décrit un dispositif d'assemblage de ce type pour deux extrémités d'arbres coaxiaux. Dans ce dispositif, un manchon mince à alésage cylindrique et de diamètre extérieur conique, est amené en contact de serrage sur les arbres par l'intermédiaire d'un manchon épais de diamètre extérieur cylindrique et d'alésage conique. Le manchon sert de piston et est actionné par l'intermédiaire d'un fluide

INSDOCID: <FR 2492022A1_I_>

sous pression introduit dans une chambre de pression. Lors du montage, les deux surfaces coniques des organes d'assemblage sont séparées par un film de fluide sous pression qui permet leur déplacement relatif.

On constate dans la pratique que les dispositifs d'assemblage de ce type nécessitent de procéder à un renforcement particulier lorsqu'ils sont appliqués à l'assemblage d'arbres creux en raison de la pression exercée par l'accouplement.

La présente invention a pour objet le montage par expansion sous pression de fluide d'accouplements rigides de ce type appliqués à des arbres présentant au moins une portion creuse.

Le dispositif d'accouplement rigide selon l'invention, monté sous pression fluide, permet l'assemblage d'une pièce comportant un alésage avec un arbre pénétrant dans cet alésage et présentant au moins une portion creuse. Le dispositif comprend deux organes d'accouplement dont les surfaces coniques en contact doivent être séparées lors du montage et du démontage par un film de fluide sous pression. L'un des deux organes d'accouplement peut être alors déplacé par l'action d'un fluide sous pression. Selon l'invention, le dispositif d'accouplement comprend une bague mince pouvant être introduite dans la portion creuse de l'arbre et présentant un alésage interne conique à l'intérieur duquel peut se déplacer un piston de surface extérieure conique. Les deux organes d'accouplement du dispositif de l'invention réalisent donc par leur structure même un renforcement de la portion creuse de l'arbre.

Pour introduire le fluide sous pression jusqu'aux surfaces coniques en contact des deux organes d'accouplement, le piston, qui peut être plein ou à parois épaisses, comprend en outre des moyens de passage susceptibles d'aboutir entre la surface conique du piston et l'alésage conique de la bague mince.

Dans un premier mode de réalisation, la bague mince présente de préférence une portion d'alésage cylindrique définissant avec une portion de diamètre réduit du piston une

BNSDOCID: <FR 2492022A1_I_>

chambre de pression obturée par un organe de fermeture fixé sur la bague. Le piston comporte des moyens de passage pour alimenter la chambre de pression en fluide sous pression.

Un joint d'étanchéité qui peut avantageusement être de structure annulaire plate, assure l'étanchéité de la chambre de pression.

Dans un mode de réalisation préféré appliqué au cas où la portion creuse de l'arbre est constituée par un chambrage borgne, la conicité du piston est telle que la portion de plus faible diamètre se trouve du côté du fond borgne de la portion creuse. Les surfaces extérieures frontales de la bague mince et du piston viennent sensiblement affleurer l'extrémité frontale de l'arbre après le montage du dispositif d'accouplement.

Dans un autre mode de réalisation également appliqué au cas où la portion creuse de l'arbre est constituée par un chambrage borgne, la conicité du piston est inverse de sorte que c'est la portion de plus grand diamètre qui se trouve du côté du fond borgne de la portion creuse.

La chambre de pression peut alors être définie entre le fond borgne et l'extrémité frontale en regard du piston, maintenue à un certain écartement. Le piston comporte des moyens de passage pour alimenter la chambre de pression en fluide sous pression. L'étanchéité est assurée simplement par le serrage des pièces.

Dans une variante, l'extrémité frontale du piston du côté du fond borgne de la portion creuse, présente un évidement qui joue le rôle de chambre de pression. Cette chambre est délimitée du côté du fond borgne par un organe de fermeture qui prend appui sur le fond borgne et par rapport auquel le piston peut se déplacer. Le piston comporte comme précédemment des moyens de passage pour alimenter la chambre de pression en fluide sous pression.

L'étanchéité de la chambre de pression est assurée par un joint d'étanchéité approprié.

Dans tous les cas, un perçage traversant le piston est de préférence prévu afin de permettre l'évacuation de l'air et du fluide du fond borgne de la portion creuse de l'arbre.

BNSDOCID: <FR.....2492022A1_I_>

Le montage du dispositif d'accouplement s'effectue en alimentant tout d'abord en fluide sous pression, par exemple en huile, les surfaces coniques en contact des deux organes d'accouplements, puis en introduisant un fluide sous pression qui peut être également de l'huile, dans la chambre de pression, ce qui provoque le déplacement du piston à l'intérieur de l'alésage conique de la bague mince et la déformation élastique par expansion de ladite bague et de la paroi de l'arbre, assurant ainsi la liaison par friction entre la surface extérieure de l'arbre et l'alésage de l'organe à accoupler. Lorsque le serrage désiré est obtenu, on supprime l'alimentation en fluide entre les deux surfaces coniques en contact qui se trouvent donc assemblées à force. Pour des accouplements de faible diamètre, l'alimentation en fluide sous pression de la chambre de pression peut se faire par les mêmes passages que pour les surfaces coniques en contact des éléments d'accouplements. Le fluide sous pression s'étale tout d'abord entre les surfaces coniques précitées puis remplit progressivement la chambre de pression en provoquant ainsi le déplacement du piston comme il vient d'être dit. Pour les accouplements de plus grand diamètre on prévoit au contraire une alimentation distincte.

Pour démonter l'accouplement selon l'invention, on introduit le fluide sous pression entre les deux surfaces coniques en contact et on ouvre de manière contrôlée une valve faisant partie d'un bouchon obturant le conduit d'alimentation en fluide de la chambre de pression. On contrôle ainsi la vitesse du déplacement axial du piston qui permet le démontage de l'accouplement.

L'invention sera mieux comprise à l'étude de la description détaillée de quelques modes de réalisation pris à titre d'exemples non limitatifs illustrés par les dessins annexés sur lesquels :

la fig. 1 est une vue en coupe de l'extrémité d'un arbre muni d'un dispositif d'accouplement selon l'invention;

la fig. 2 est une vue en coupe analogue d'une première variante; et

BNSDOCID: <FR 2492022A1_1_>

la fig. 3 est une vue en coupe analogue d'une troisième variante.

Tel qu'il est représenté sur la figure 1, le dispositif d'accouplement selon l'invention référencé 1 dans son ensemble est introduit dans un chambrage borgne 2 pratiqué à l'extrémité d'un arbre cylindrique 3 afin d'assembler sur cet arbre une pièce 4 qui est par exemple une poulie et qui présente un alésage cylindrique coopérant avec la surface extérieure cylindrique de l'arbre 3 au droit du chambrage borgne 2.

Le dispositif d'accouplement 1 comprend une bague mince 5 présentant une surface extérieure cylindrique et introduite facilement par un ajustement glissant dans le chambrage 2. La surface extérieure cylindrique de la bague 5 présente de préférence un filet hélicoïdal de faible section, non représenté sur la figure, débouchant à l'extérieur. Ce filet favorise l'évacuation de l'huile recouvrant éventuellement les surfaces cylindriques afin de faciliter l'introduction du dispositif dans le chambrage. La bague mince 5 présente une portion d'alésage conique 6 et une portion d'alésage cylindrique 7 du côté extérieur. Un piston 8 de surface extérieure conique présentant sensiblement la même conicité que l'alésage conique 6 de la bague 5, est introduit à l'intérieur de cette dernière. La conicité du piston 8 est telle que sa portion de plus faible diamètre se trouve du côté du fond 24 du chambrage borgne 2.

Du côté extérieur, le piston 8 comporte une portion 9 de diamètre réduit définissant avec la portion 7 d'alésage cylindrique de la bague 5, une chambre de pression 10 annulaire, obturée par un organe de fermeture annulaire 11 vissé par son filetage 12 à l'extrémité de la portion d'alésage cylindrique 7 de la bague 5. On notera que des évidements borgnes 13 permettent de faciliter le serrage et le vissage de l'organe de fermeture 11. Un joint annulaire plat 14 est monté à l'intérieur de la chambre de pression 10 en contact avec la face interne de l'organe de fermeture 11 et venant entourer la portion de diamètre réduit 9 du piston 8 de façon à assurer l'étanchéité de la chambre de pression 10 par déformation élastique.

INSDOCID: <FR.....2492022A1_I_>

La création d'un film de fluide tel que de l'huile entre les deux surfaces coniques en regard de la bague mince 5 et du piston 8, est faite au moyen de deux gorges annulaires 15 et 16 pratiquées sur la surface extérieure du piston 8 et communiquant entre elles par des gorges axiales 17 également pratiquées sur la surface extérieure du piston 8. On notera que l'on pourrait sans difficulté prévoir plus de deux gorges annulaires.

Le fluide sous pression est amené par le passage d'alimentation 18 disposé de manière sensiblement axiale à l'intérieur du piston 8 dans un passage 18a sensiblement radial pratiqué à l'intérieur du piston 8 et communiquant avec la gorge circulaire 15. Un raccord d'arrivée de fluide 19 relié au passage 18 est prévu dans la portion 9. De cette manière le fluide sous pression est alimenté entre ses surfaces coniques quelle que soit la position angulaire du piston 8.

La chambre de pression 10 est alimentée en fluide sous pression par le passage radial 20 pratiquée dans la portion de diamètre réduit 9 du piston 8 et relié au raccord d'alimentation de fluide 21.

On notera que les deux raccords d'arrivée de fluide 19 et 21 sont disposés côte à côte dans la face frontale de la portion 9 ce qui réduit l'encombrement du dispositif de l'invention et facilite le montage des conduits d'arrivée de fluide sous pression.

Un perçage axial 22 traverse le piston 8 de part en part de façon à permettre l'évacuation de l'air et du fluide pouvant subsister dans le fond borgne du chambrage 2 lors du montage du dispositif d'accouplement de l'invention. Le perçage 22 peut être obturé après l'assemblage par un bouchon fileté coopérant avec le taraudage 22a.

On notera que les longueurs axiales de la bague mince 5 et du piston conique 8 sont déterminées de façon à obtenir le serrage desiré pour la transmission par friction d'un effort déterminé tel qu'un couple, un effort axial ou des charges combinées. Les faces frontales du piston 8 et de la bague 5 se trouvent alors de préférence sensiblement dans le même plan.

BNSDOCID: <FR.....2492022A1_I_>

Lorsque le dispositif d'accouplement est assemblé, il subsiste comme on peut le remarquer sur la figure 1, un écartement entre la face interne frontale 23 du piston 8 et le fond 24 du chambrage borgne 2. La valeur de cet écartement est choisie de façon que si le piston 8 vient en contact avec le fond 24, la contrainte admissible en fonction de la nature du matériau choisi pour les différents organes du dispositif d'accouplement ne soit pas dépassée.

La profondeur du chambrage 2 est de préférence choisie de façon que les faces frontales externes du piston 8 et de la bague mince 5 viennent sensiblement affleurer la face d'extrémité frontale de l'arbre 3 et de la pièce 4 à assembler.

Le montage du dispositif d'accouplement se fait de la manière suivante.

On introduit un fluide hydraulique sous pression tel que de l'huile par le passage 18 de façon à séparer complètement les deux surfaces coniques en regard de la bague mince 5 et du piston 8. On introduit ensuite un fluide hydraulique sous pression tel que de l'huile par le passage 20 dans la chambre de pression 10 ce qui provoque un effort axial sur la face frontale 25 annulaire du piston 8 délimitant la chambre de pression 10 et un déplacement du piston 8 à l'intérieur de la bague mince 5. Ce déplacement est rendu possible grâce à l'existence du film d'huile entre les deux surfaces coniques en regard. Lorsque le serrage désiré est obtenu, on cesse d'appliquer le fluide sous pression à la canalisation 18 ce qui provoque le serrage des deux surfaces coniques en regard. On décharge ensuite la chambre de pression 10.

Dans le cas d'un accouplement de plus faible diamètre il serait possible de supprimer le passage d'alimentation 20 de la chambre de pression 10 et de se contenter pour le montage d'alimenter la chambre de pression 10 par le fluide sous-pression provenant des gorges circulaires 15 et 16, étalé entre les deux surfaces coniques et remplissant alors progressivement la chambre de pression 10.

Pour le démontage du dispositif d'accouplement de l'invention. On obture le trou taraudé 21 par un bouchon fileté,

BNSDOCID: <FR_____2492022A1_I_>

non représenté sur la figure, et comportant une valve à ouverture réglable. On introduit le fluide sous pression par le passage d'alimentation 18 en ouvrant progressivement la valve précitée. On contrôle ainsi le déplacement du piston 8 vers la gauche sur la fig. 1 à l'intérieur de la bague mince 5, étant donné que les deux surfaces coniques assemblées à force se trouvent séparées par un film de fluide sous pression qui supprime le frottement. Pendant le démontage, la chambre 10 est soumise à une pression qui est fonction de la surface de la projection radiale de l'assemblage conique.

Le mode de réalisation illustré sur la fig. 2 sur lequel les pièces identiques portent les mêmes références ne se distingue du mode de réalisation précédent que par la conicité inverse du piston et la différence qui en résulte dans la configuration de la chambre de pression.

Comme on peut le voir en effet sur la fig. 2, la conicité du piston 26 est telle que c'est sa portion de plus grand diamètre qui se trouve du côté du fond borgne 24 du chambrage. La bague mince 27 comporte bien entendu une surface interne de conicité égale à celle du piston 26 de façon à pouvoir coopérer avec ce dernier comme dans le mode de réalisation précédent.

La chambre de pression 29 est ici définie entre le fond 24 du chambrage et la surface frontale interne 28 du piston 26. Pour donner à la chambre de pression 29 des dimensions convenables, un certain écartement subsiste entre ces parois frontales en regard.

Le fluide sous pression est alimenté par le passage 30. Dans ce mode de réalisation, l'étanchéité de la chambre de pression 29 est assurée uniquement par le serrage des pièces et en particulier le serrage entre la surface extérieure de la bague mince 27 et l'alésage de l'arbre 3. Le film d'huile entre le piston 26 et la bague 27 est créé comme précédemment grâce à l'existence des gorges 15, 16 et 17.

Dans le mode de réalisation de la fig. 3 où les pièces identiques portent les mêmes références, le piston 31 présente la même conicité que le piston 26 du mode de réalisation de la

BNSDOCID: <FR 2492022A1_I_>

fig. 2. Sa portion de plus grand diamètre se trouve donc du côté du fond borgne 24 du chambrage. Un évidement annulaire 32a pratiqué dans le piston 31 et débouchant sur sa face interne 31a définit une chambre de pression 32 qui est délimitée du côté du fond borgne 24 par la face frontale d'un organe d'obturation 33 en forme d'anneau qui vient prendre appui sur le fond 24. Un joint d'étanchéité annulaire plat 34 disposé dans la chambre 32 en contact avec l'organe d'obturation 33 assure l'étanchéité de la chambre de pression 32. La chambre de pression 32 est alimentée en fluide sous pression par le passage 35. Dans ces conditions, la mise sous pression de la chambre 32 entraîne le déplacement vers la gauche de la fig. 3 du piston 31, l'organe d'obturation 33 étant immobilisé par son appui contre le fond 24 du chambrage borgne. Le film d'huile entre le piston 31 et la bague mince 27 est créé comme précédemment grâce à l'existence des gorges 15, 16 et 17.

Bien que dans ce mode de réalisation la chambre de pression 32 soit réalisée sous la forme d'un évidement annulaire, on comprendra que l'on pourrait parfaitement concevoir un évidement de forme cylindrique pratiqué dans l'axe du piston 31 et coopérant alors avec un organe de fermeture s'apparentant à un piston auxiliaire prenant appui comme précédemment sur le fond 24 du chambrage borgne.

Bien que l'invention ait été décrite en référence à des exemples où l'arbre comportait un chambrage borgne, on comprendra qu'elle puisse être appliquée sans grande modification au cas d'un arbre comportant une portion creuse interne. De la même manière on comprendra que la pièce 4 peut ne pas être exactement fixée à l'extrémité de l'arbre 3 mais s'en trouver légèrement décalée.

INSDOCID: <FR 2492022A1 I>

REVENDICATIONS

1. Dispositif d'accouplement rigide monté sous pression de fluide entre une pièce (4) comportant un alésage et un arbre (3) pénétrant dans l'alésage et présentant au moins une portion creuse (2), le dispositif comprenant deux organes d'accouplement dont les surfaces coniques en contact peuvent être séparées lors du montage par un film de fluide sous pression, l'un des deux organes pouvant être déplacé par l'action du fluide sous pression, caractérisé par le fait qu'il comprend une bague mince (5) pouvant être introduite dans la portion creuse (2) de l'arbre (3) et présentant un alésage interne (6) conique à l'intérieur duquel peut se déplacer un piston (8) de surface extérieure conique.

2. Dispositif d'accouplement selon l'une quelconque des revendications précédentes, caractérisé par le fait que le piston (8) comprend des moyens de passage pour introduire un fluide sous pression entre la surface extérieure conique du piston et l'alésage conique de la bague mince (5).

3. Dispositif d'accouplement selon la revendication 1, caractérisé par le fait que la bague (5) présente une portion d'alésage cylindrique (7) définissant avec une portion (9) de diamètre réduit du piston (8) une chambre de pression (10) obturée par un organe de fermeture (11) fixé sur la bague (5), le piston (8) comportant des moyens de passage pour alimenter la chambre de pression en fluide sous pression.

4. Dispositif d'accouplement selon la revendication 2 caractérisé par le fait qu'un joint d'étanchéité annulaire plat (14) est monté dans la chambre de pression (10) et en assure l'étanchéité.

5. Dispositif d'accouplement selon l'une quelconque des revendications précédentes caractérisé par le fait que la portion creuse de l'arbre est borgne la conicité du piston (8) étant telle que la portion de plus faible diamètre se trouve du côté du fond borgne de la portion creuse et, les surfaces externes frontales de la bague mince et du piston venant sensiblement affleurer l'extrémité frontale de l'arbre.

BNSDOCID: <FR_____2492022A1_I_>

6. Dispositif d'accouplement selon la revendication 1 ou 2, caractérisé par le fait que la portion creuse de l'arbre est borgne et que la conicité du piston est telle que la portion de plus grand diamètre se trouve du côté du fond borgne de la portion creuse.

7. Dispositif d'accouplement selon la revendication 6, caractérisé par le fait qu'une chambre de pression (29) est définie entre le fond borgne de la portion creuse et l'extrémité frontale en regard du piston, le piston comportant des moyens de passage pour alimenter la chambre de pression en fluide sous pression.

8. Dispositif d'accouplement selon la revendication 6, caractérisé par le fait que l'extrémité frontale du piston du côté du fond borgne de la portion creuse présente un évidement (32a) jouant le rôle de chambre de pression, délimitée, du côté du fond borgne, par un organe de fermeture (33) prenant appui sur ledit fond borgne, le piston comportant des moyens de passage pour alimenter l'évidement en fluide sous pression.

9. Dispositif d'accouplement selon la revendication 8, caractérisé par le fait qu'un joint d'étanchéité (34) coopère avec l'organe de fermeture et l'évidement pour assurer l'étanchéité de la chambre de pression.

10. Dispositif d'accouplement selon la revendication 5, caractérisé par le fait qu'un perçage (22) traverse le piston pour l'évacuation de l'air et du fluide du fond borgne de la portion creuse de l'arbre.

INSDOCID: <FR 2492022A1 I_>

FIG.1

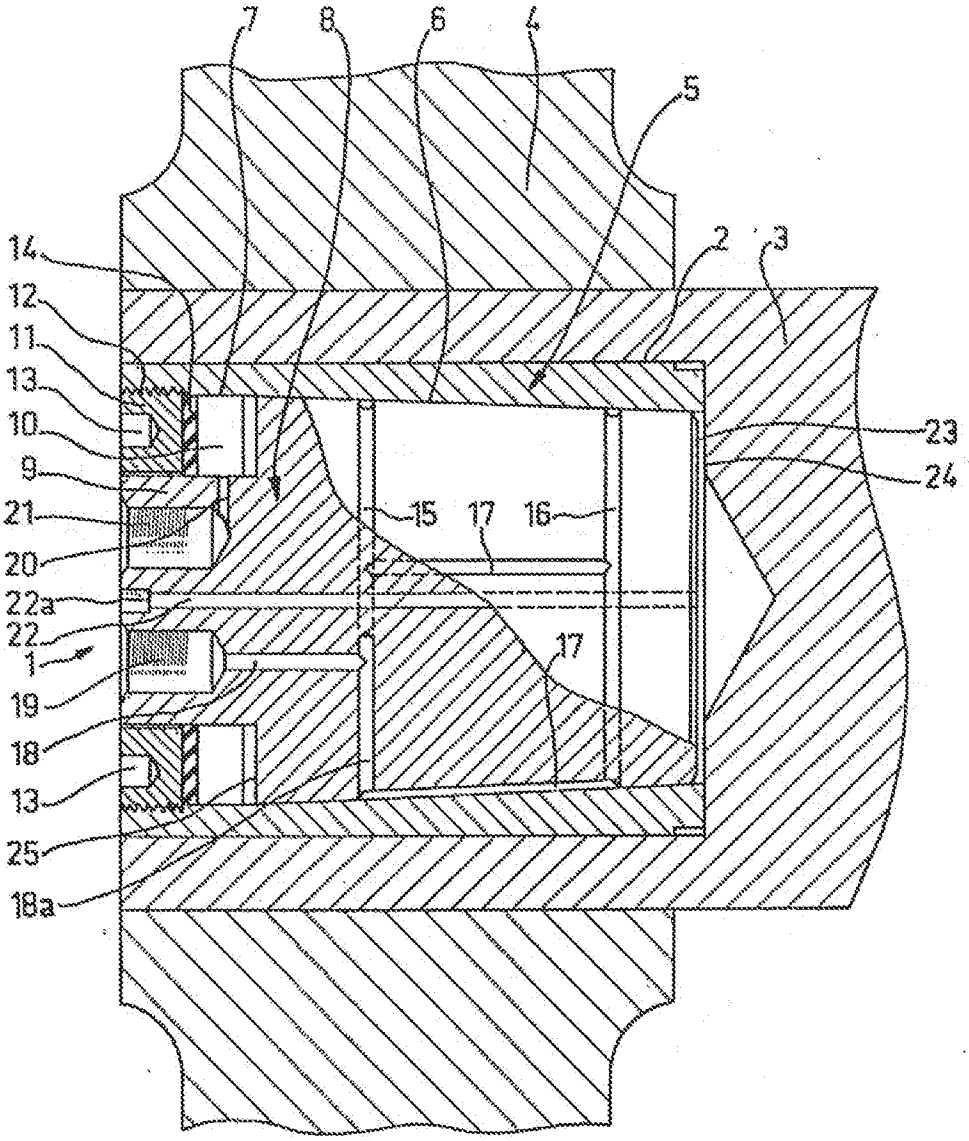

BNSDOCID: <FR_____2492022A1_I_>

FIG.2

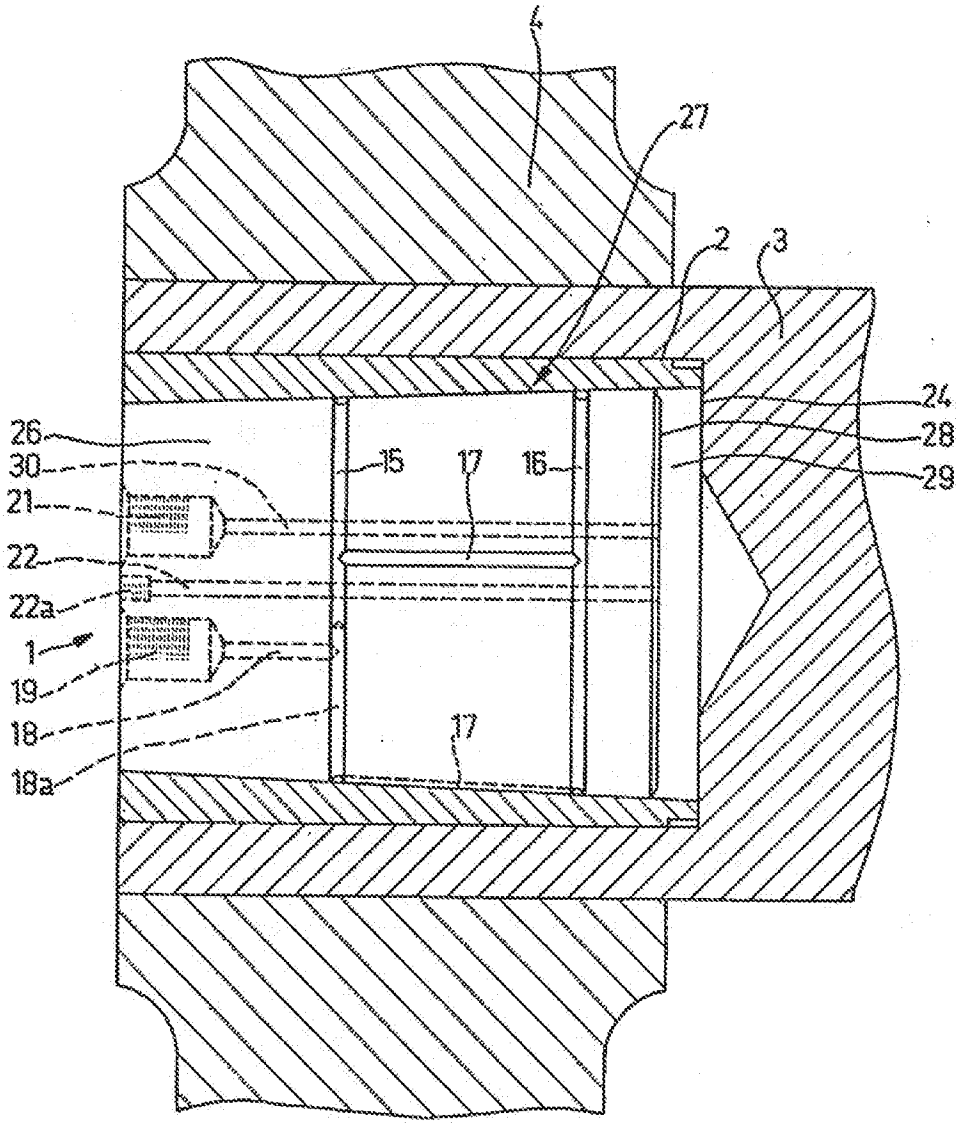

SNSDOCID: <FR_____2492022A1_I_>

FIG.3

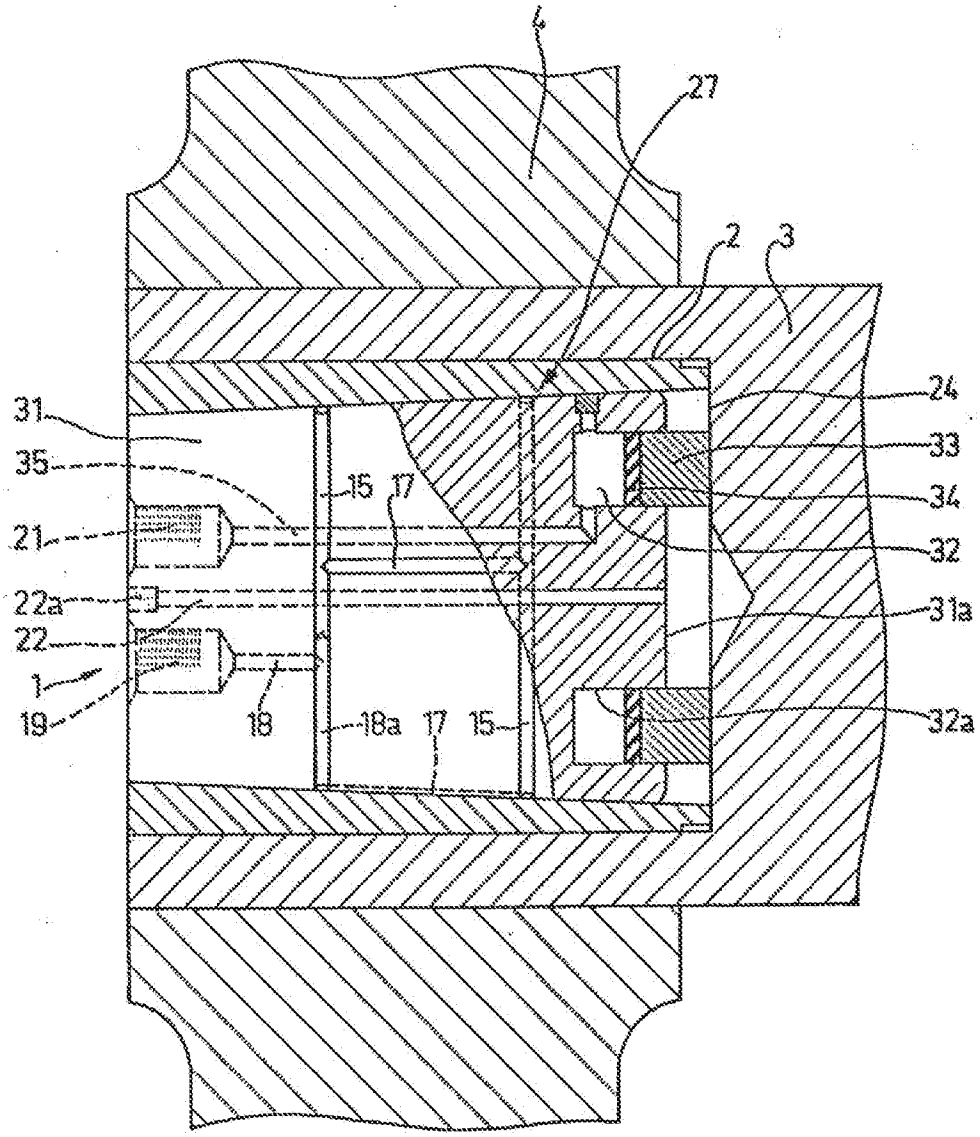

BNSDOCID <FR.....2492022A1_I_>

Patent Translate
Powered by EPO and Google

Notice

This translation is machine-generated. It cannot be guaranteed that it is intelligible, accurate, complete, reliable or fit for specific purposes. Critical decisions, such as commercially relevant or financial decisions, should not be based on machine-translation output.

CLAIMS FR531391

<RTI> RgSU # IE WITH </ RTI> A grinding machine <B> by </ B> tory gira movement including <B>. </ B> hopper, tral cen tree and devices to bear a eccentric sleeve rotatably mounted on ar ber, a <RTI> the </ RTI> mounted grinding to rotate and adjust the eccentric sleeve, bedroom <B> by </ B> oil around the tip lower <B> </ B> <RTI> Parbre, </ RTI> containing <RTI> Pextrémité </ RTI> lower <B> of </ B> eccentric sleeve, com control devices for the eccentric sleeve enclosed in room <B> by </ B> oil, Suspected ring ible support the <RTI> tdte </ RTI> grinding, closing partially the top of the chamber, a thrust bearing between the ring and the wall the cham ber, head <B> - </ B> with a grinding rim during -from uniform diameter, rim being capable of entering the top of the chamber <B> by </ B> oil, bedroom < B> at </ B> oil around the upper end of the shaft <RTI> susceL </ RTI> <RTI> ble </ RTI> to contain <RTI> Pextrémité </ RTI> <RTI> supérieui < / RTI> it, eccentric sleeve, a closing <B> by </ B> oil around <RTI> cettiS </ RTI> B <B> by </ B> oil in contact with the top of the grinding suckled and louse Vant <RTI> fit </ RTI> over <B> by </ B> ing him and telescopic agrees with the ceiling of this room <B> by </ B> oil.

RÉPUBLIQUE FRANÇAISE.

OFFICE NATIONAL DE LA PROPRIÉTÉ INDUSTRIELLE.

BREVET D'INVENTION.

V. — Machines.

5. — Machines diverses.

N° 531.391

Perfectionnements dans les broyeurs giratoires.

Société dite : SMITH ENGINEERING WORKS résidant aux États-Unis d'Amérique.

Demandé le 26 février 1921, à 15h 20m, à Paris.
Délivré le 21 octobre 1921. — Publié le 11 janvier 1922.
(Demande de brevet déposée aux États-Unis d'Amérique le 14 novembre 1917. — Déclaration du déposant.)

La présente invention est relative à des perfectionnements apportés aux broyeurs à mouvement de giration et a pour objet leur simplification. Un autre objet est de réaliser des dispositifs grâce auxquels la position de la tête de broyage dans la trémie, peut être réglée, avec le minimum de difficultés, en vue de compenser l'usure ou un défaut de réglage. Un autre objet est de réaliser un broyeur comportant un nombre minimum d'endroits où un dégagement doit être laissé, suivant la ligne de la pression de broyage.

Il a été déjà proposé d'employer une machine de broyage, du type général dans lequel le manchon excentré rotatif a été entouré par un manchon cylindrique et dans lequel, la tête de broyage est montée de façon à pouvoir coulisser sur le manchon cylindrique. Afin de permettre à la tête de broyage d'être déplacée longitudinalement le long du manchon, un jeu ou dégagement doit être ménagé. L'expérience montre que lorsqu'on utilise un type de machine dans laquelle se trouvent un certain nombre de défauts d'ajustage en ligne directe avec la pression de broyage, il se produira un concassage ou martelage qui aura pour effet de battre en brèche la garniture de la tête qui s'usera ainsi d'une façon plus importante que le trou. Le résultat est que le concassage empire et avant longtemps la totalité du palier est réduite en morceaux. En éliminant un des défauts d'ajustage ce martelage est réduit au minimum.

Dans le dispositif faisant l'objet de la présente invention, le manchon cylindrique et la tête de broyage font corps, supprimant ainsi le jeu et renforçant les parties, sans augmenter le poids. Le manchon à excentrique est protégé, grâce à une saillie faisant corps avec ce manchon, s'étendant vers le bas à partir de la tête de broyage, dans la chambre de graissage et en plaçant la tête de broyage en contact avec le manchon excentré, seulement sur une partie intermédiaire de sa longueur, de façon à ménager une chambre, pour l'ajustage soit vers le haut, soit vers le bas de la tête de broyage, par rapport au manchon excentré, sans diminuer la surface d'appui hors du manchon ou de la tête.

La présente invention est représentée, plus ou moins schématiquement, sur le dessin annexé qui représente une coupe verticale faite à travers la machine.

A désigne la trémie de broyage montée sur un socle A^1 et munie, à l'intérieur, d'une garniture de broyage A^2, tout l'ensemble étant monté sur un socle A^3. A^4 est un croisillon inférieur, fixé au socle et dans ce cas faisant corps avec la base ou socle du broyeur; cette base est susceptible de porter l'arbre central A^5, fixé au socle et supporté, à son extrémité supérieure, par un croisillon supérieur A^6 faisant

Prix du fascicule : 1 franc.

BNSDOCID: <FR_____531391A_I_>

corps avec la trémie d'alimentation A^7, fixée à la trémie de broyage A par les boulons A^8.

B est un arbre de commande, portant la poulie à courroie B^1, susceptible d'être commandée par une source convenable, quelconque, de force motrice, non représentée ici. B^2 est un pignon d'angle, monté à l'extrémité de l'arbre B et tournant dans le réservoir à huile B^3. Ce pignon engrène avec la roue d'angle B^4 montée sur le manchon excentré B^5, qui à son tour est monté pour tourner sur l'arbre central fixe A^5; ce manchon excentré B^5 est supporté à son extrémité inférieure par le palier de poussée B^6.

C'est une tête de broyage s'appuyant sur le manchon excentré B^5 et pouvant tourner par rapport à lui. Elle est supportée, de façon réglable, sur l'anneau C^1 par les vis de réglage C^2. Cet anneau C^1 est supporté, de façon coulissante, sur un anneau d'appui C^3, muni d'une rondelle de garniture C^4 et ayant des bords formant racloirs inclinés pour l'huile et la poussière, comme il est indiqué. Cet anneau d'appui C^3 est supporté par le croisillon A^6 et forme avec la rondelle C^4 et l'extension cylindrique C^5, prolongée vers le bas de la tête de broyage, la limite supérieure d'une chambre à huile, dans laquelle sont contenues beaucoup de parties travaillantes. Cette plaque d'appui C^3 est empêchée de tourner sur le croisillon et les parois de la chambre à huile, au moyen de tenons C^6. C^7 est une enveloppe résistante de broyage, de préférence amovible et fabriquée en manganèse ou matière semblable de longue durée. Cette enveloppe peut ou non être ondulée ou repliée. Si elle est amovible sur la tête de broyage, comme il est indiqué, elle sera maintenue en position sur cette tête, au moyen d'un boulon de maintien C^8, s'engageant dans des oreilles C^9 formées sur l'enveloppe et serré par des écrous C^{10}. Dans ces circonstances, cette enveloppe peut faire corps avec la tête de broyage, en durcissant simplement la surface extérieure de la pièce fondue. Dans des circonstances ordinaires, toutefois, s'il s'agit d'un travail à rendement élevé, l'enveloppe en manganèse est préférable, parce que d'elle-même elle se prête à un remplacement plus rapide. Si on n'emploie pas l'enveloppe en manganèse, la tête de broyage est coulée d'une seule pièce, de façon que sa forme extérieure soit identique à celle de l'enveloppe en manganèse.

D est un tuyau principal amenant le lubrifiant, il provient d'une pompe qui n'est pas représentée et passe à travers un bras du croisillon A^6 pour aboutir à un passage D^1. Ce passage communique avec un anneau D^2, existant autour de l'extrémité supérieure de l'arbre central. Un passage radial D^3 communique à une extrémité avec la gorge D^2 et à l'autre extrémité avec le passage central D^4, qui, à son tour, communique au moyen du passage radial D^5 avec une gorge annulaire D^6, dans la portion centrale de l'arbre fixe. L'huile refoulée à travers ce système arrive finalement dans la gorge D^6 et coule vers le haut et vers le bas de l'arbre central, lubrifiant l'appui de l'excentrique sur l'arbre. D^7 est un passage pratiqué à travers l'excentrique, toujours en correspondance avec la gorge D^6, grâce à laquelle l'appui entre l'excentrique et la tête de broyage peut toujours être lubrifié. Toute huile passant sur l'intérieur de l'excentrique passera au-dessus du sommet et tombera dans la chambre D^8, formée entre l'anneau de garniture D^9 et le sommet de la tête de broyage. Cet anneau de garniture D^9 possède un contact coulissant avec une surface de garniture D^{10}, sur la partie supérieure de la tête de broyage, afin de constituer un joint, pratiquement étanche, à l'huile. La pression est exercée sur cet anneau de garniture pour augmenter l'étanchéité en huile de ce joint, au moyen de la vis D^{11} qui complète l'application énergique de l'anneau de garniture sur l'extrémité supérieure de la tête de broyage. L'huile qui s'écoule vers le bas, à la fois à l'extérieur et à l'intérieur du manchon excentré, se rend finalement dans la chambre à huile, à la base du manchon. L'huile qui se trouve à l'intérieur du manchon en sort et lubrifie le palier de butée supportant l'excentrique. Toute l'huile s'assemble pour lubrifier le train de roue et pignon dentés, et se rend ensuite par le tuyau D^{12} au réservoir D^{13}.

Les paliers E, E^1, dans lesquels tourne l'arbre de commande B sont graissés par un conduit à huile E^2, constituant un branchement du tuyau D, distribuant l'huile dans la chambre E^3 comprise entre les paliers. De là, l'huile suit deux chemins : une partie de l'huile se rend dans la chambre de graissage B^3, au pied du manchon excentré et également une partie de l'huile se rend dans la chambre E^3, où le pignon d'angle E^5, calé sur l'arbre B, com-

WIPOCOPY <FR 531391A 1 >

mande la roue d'angle E^7, montée sur l'arbre d'une pompe E^8, et c'est grâce à cette huile que le mécanisme de commande de la pompe est maintenu lubrifié. De là l'huile revient en arrière au moyen du tuyau E^9 et par le tuyau E^{12} se rend au réservoir.

L'emploi et le fonctionnement de l'invention sont les suivants :

La matière à broyer est amenée dans le broyeur, par le dessus de la trémie d'alimentation et elle tombe dans la trémie de broyage, dans laquelle elle est broyée par le mouvement de giration de la tête de broyage. La matière broyée lorsqu'elle devient suffisamment petite, tombe par le fond à travers l'ouverture comprise entre la tête de broyage et les parois de la trémie. Cette ouverture peut être maintenue à une dimension constante, lorsque la tête de broyage ou les parois de broyage s'usent, en soulevant l'enveloppe de broyage au moyen des écrous reglables, prévue dans ce but, ou bien cet ajustage peut servir à produire un changement dans les dimensions du produit. En faisant l'ouverture plus petite on obtiendra un broyage plus fin et en faisant cette ouverture plus grande on obtiendra un broyage plus grossier, la matière pouvant sortir de la machine aussitôt qu'elle possède une dimension suffisamment petite pour traverser l'ouverture.

Le manchon se prolonge vers le bas à partir de la tête de broyage et ce manchon traverse l'anneau-support comme il est indiqué, et l'huile est maintenue à l'intérieur et la poussière à l'extérieur, au moyen d'une garniture entre le manchon et l'anneau; grâce à cette disposition, la tête de broyage est libre de se déplacer vers le haut et vers le bas, lorsqu'on agit sur les vis de réglage sans découvrir le manchon excentré et sans permettre à l'huile de sortir et à la poussière de pénétrer dans la chambre à huile.

RÉSUMÉ.

Une machine de broyage à mouvement giratoire comprenant : une trémie, un arbre central et des dispositifs pour le supporter, un manchon excentré monté pour tourner sur l'arbre, une tête de broyage montée pour tourner et s'ajuster sur le manchon excentré, une chambre à huile autour de l'extrémité inférieure de l'arbre, renfermant l'extrémité inférieure du manchon excentré, des dispositifs de commande pour ce manchon excentré renfermés dans la chambre à huile, un anneau susceptible de supporter la tête de broyage, fermant en partie le dessus de la chambre, un palier de butée entre cet anneau et la paroi de la chambre, la tête de broyage possédant un rebord pendant de diamètre uniforme, ce rebord étant susceptible de pénétrer dans le dessus de la chambre à huile, une chambre à huile autour de l'extrémité supérieure de l'arbre, susceptible de renfermer l'extrémité supérieure du manchon excentré, une fermeture à huile autour de cette chambre à huile en contact avec le sommet de la tête de broyage et pouvant s'ajuster par rapport à lui et en engagement télescopique avec le plafond de cette chambre à huile.

Société dite : SMITH ENGINEERING WORKS.

Par procuration :

G. Breton, P. Aury, J. Rousset, A. Vergé.

Pour la vente des fascicules, s'adresser à l'Imprimerie Nationale, 87, rue Vieille-du-Temple. Paris. (3e).

BNSDOCID: <FR_____531391A__I_>

N° 531.391

Société dite :
Smith Engineering Works

Pl. unique

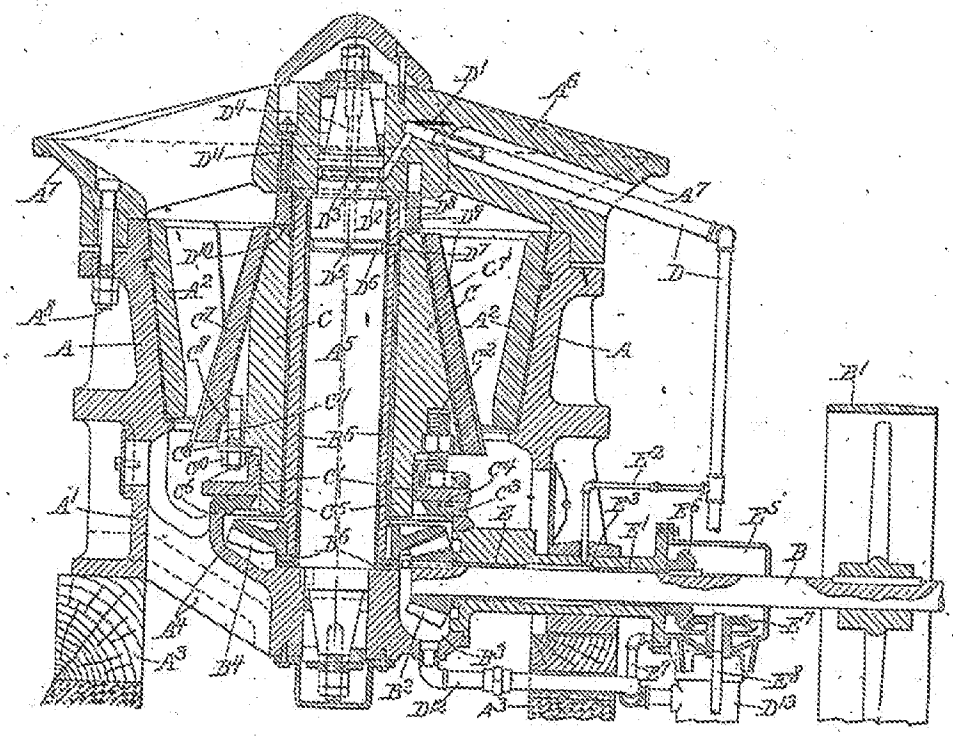

3NSDOCID: <FR_____531391A_1_>

Patent Translate
Powered by EPO and Google

Notice

This translation is machine-generated. It cannot be guaranteed that it is intelligible, accurate, complete, reliable or fit for specific purposes. Critical decisions, such as commercially relevant or financial decisions, should not be based on machine-translation output.

DESCRIPTION SU940837

The upper support of the movable crushing cone cone crusher

Верхняя опора подвижного дробящего конуса конусной дробилки

This invention relates to cone crushers coarse crushing, namely to the movable upper assembly crushing cone bearing.

Изобретение относится к конусным дробилкам крупного дробления, а именно к узлу верхней опоры подвижного дробящего конуса.

Known upper support movable crushing cone crusher cone containing vtudki and bearing half-rings that are included in the shaft groove, the latter sit on the shaft with a gap that the crusher operation leads to mutual movement and wear the shaft sleeve and half-rings 1.

Известна верхняя опора подвижного дробящего конуса конусной дробилки, содержащая втудки и несущие полукольца, входящие в проточки вала, причем последние сидят на валу с зазором, что при работе дробилки приводит к взаимному перемещению и износу втулки вала и полуколец 1.

In its technical essence the closest: the proposed support is movable upper support cone crushing cone crusher coarse crushing with mechanical regulation of the discharge gap, comprising a split cone sleeve mounted coaxially on the shank of the movable cone shaft in the cage crosspiece 2.

По своей технической сущности наиболее близкой :к предлагаемой опоре является

верхняя опора подвижного дробящего конуса Конусной дробилки крупного дробления с механическим регулированием разгрузочной щели, содержащая разрезную конусную втулку, установленную соосно на хвостовике вала подвижного конуса в обойме траверсы 2.

In such a cone crusher is suspended from the chassis and the suspension traverse unit simultaneously performs the function of gap control. With the split taper bushing, screwed on the shank of the movable cone shaft, made its ascent or oouokanie that determines the size of the discharge gap between the cones. For this 1PODVIZHNY cone is lifted by crane, display back nut of the conical connection with a holder, knock out a wedge schponku and turning a nut on a few turns, dipped cone in place and hammer wedge shpon1ku. This unloading slot changes.

В таких дробилках конус подвешивается к корпусу траверсы и узел подвеса одновременно выполняет функцию регулирования щели. При помощи разрезной конусной втулки, навернутой на хвостовик вала подвижного конуса, осуществляется его подъем или ооуокание, что определяет размер разгрузочной щели между конусами. Для этого 1ПОДВИЖНЫЙ конус приподнимают краном, выводят резервную гайку из конического соединения с обоймой, выбивают клиновую щпонку и, повернув гайку на,несколько оборотов, опускают конус на место и забивают клиновую шпон1ку. При этом разгрузочная щель меняется.

The disadvantage of such a support is a failure of the main shaft, since the crusher there occurs a strong de10formatsiya of threads or partial interruption of the high napryal eny occurring in the thread of the sum of the forces of its own weight of the movable pin and the vertical component of the crushing reinforced in ko15nusnom compound vtori1chno and reinforced in the very thread is in a wedge, when crimping a split tapered bushing clip. The voltage in the coils of the main shaft, in contact with lower taper bushing raz20reznoy turns much higher than the rest of the turns in contact with it, due to the conical raznosteniosti parts: the lower part is compressed and split bush bol25sche significantly deformed than the top. As a result, the split bush deformed coils wedged and can not be rotated, so the sleeve is removed by cutting it apart. Broken off the threads on the main shaft are removed, and the deformed portion

---

Недостатком такой опоры является выход из строя главного вала, так как при работе дробилки происходит сильная де10формация витков резьбы или их частичный обрыв из-за высоких напрял ений, возникающих в резьбе от суммы сил собственного веса подвижного конуса и вертикальной составляющей дробления, усиленных в ко15нусном соединении и втори1чно усиленных в самой резьбе, как в клине, при обжатии разрезной конусной втулки обоймой. При этом напряжение в витках главного вала, контактирующих с нижними витками раз20резной конусной втулки, значительно выше, чем в остальных контактирующих с ней витках, из-за разностениости конусной части: в нижней части разрезная втулка сжимается и

деформируется значительно боль25ще, чем в верхней. В результате разрезная втулка заклинивается деформированными витками и ее невозможно повернуть, поэтому втулку снимают, разрезая ее на части. Обломанные витки резьбы на главном валу удаляют, а деформированную часть

thirty

30

corrected manually. Only after atoro main shaft again allowed to work with the new split bush. In the case of missteps Precipice screw shaft expensive discarded.

исправляют вручную. И только после atoro главный вал снова пускают в работу с новой разрезной втулкой. В случае оплошного Обрыва винтов дорогостоящий вал Выбраковывают.

The disadvantages of this support are also adjusting the crushing gap complexity associated with the fact that the regulation is done by hand to produce the desired torque via the lever to turn the split sleeve; schagovoe regulation, equal thread pitch of the main shaft, and control with smaller steps impossible since the split bush can be rotated on the shaft at least one oborotiz a mismatch keyways, and the increase in their number and weakens the already weak thread; difficulty in manufacturing, is the need to cut buttress thread on the surface of a heavy shaft of large diameter and length.

Недостатками этой опоры являются также трудоемкость регулирования разгрузочной щели, связанная с тем, что регулирование выполняется вручную для создания необходимого крутящего момента через рычаг с целью поворота разрезной втулки; щаговое регулирование, равное шагу резьбы главного вала, причем регулирование с меньшим шагом невозможно, так как разрезная втулка не может быть повернута на валу менее чем на один оборотиз-за несовпадения шпоночных пазов, а увеличение их числа ослабляет и без того слабую резьбу; сложность в изготовлении, заключается в необходимости нарезки упорной резьбы на поверхности тяжелого вала больших диаметра и длины.

The invention aims to improve the reliability of the upper support, simplify and ensure fine control of the discharge gap, reducing trudoemashsti repair.

Целью изобретения является повышение надежности верхней опоры, упрощение и

обеспечение тонкого регулирования разгрузочной щели, снижение трудоемашсти ремонта.

The aim is achieved in that in the upper support the mobility of the crusher head cone crusher coarse crushing with mechanical regulation of the discharge gap having a split cone sleeve mounted coaxially on the shank of the movable cone shaft in a cage yoke, the shank of the movable cone shaft is made with annular protoch.kami and snabl en mounted in one of the locking ring grooves, cutting simply supported on the end of the cone sleeve.

Цель достигается тем, что в верхней опоре подвижНого дробящего конуса конусной дробилки крупного дробления с механическим регулированием разгрузочной щели, содержащей разрезную конусную втулку, установленную соосно на хвостовике вала подвижного конуса в обойме траверсы, хвостовик вала подвижного конуса выполнен с кольцевыми проточ.ками и снабл ен установленным в одной из проточек стопорным кольцом, опертым на торец разрезной конусной втулки.

FIG. 1 izobral en general view of the upper Honore; FIG. 2 - the option to install the locking 1koltsa.

На фИг. 1 изобрал ен общий вид верхней оноры; на фиг. 2 - вариант установки стопорного 1кольца.

Upper support comprises owned movable cone shank of the main shaft 1 having a series of annular grooves 2, in each of which, depending upon the desired gap size is set sliced apart retaining kolytso 3, which can be accomplished with a shoulder 4 and set them up or down, drawing on a split tapered vtulit 5,

---

Верхняя опора содержит принадлежащий подвижному конусу хвостовик главного вала 1, имеющий ряд кольцевых проточек 2, в любой из которых в зависимости от требуемого размера щели установлено разрезанное на части стопорное колыцо 3, которое может быть выполнено с буртом 4 и устанавливается им вверх или вниз, опираясь на разрезную конусную втулиу 5,

in contact with the housing 6, which is based on the cone sleeve 7 and washer 8 9 traverses.

контактирующую с обоймой 6, опирающейся на конусную втулку 7 и шайбу 8 траверсы 9.

If necessary in order to achieve

При необходимости для достижения

maximum precision regulation of discharge slots, and between the ends tulki 5 and cut into pieces 3 rings placed promezhuto1chnye pads.

максимальной точности регулирования разгрузочной щел,и между торцами Ьтулки 5 и разрезанного на части кольца 3 ставятся промежуто1чные прокладки.

For controlling the gap shaft 1 lifted by a crane, removed cut into ring portion 3, it is set to the desired grooves 2 of the up or down collar 4 depending on the desired height of lifting or lowering the movable shaft 1

Для регулирования щели вал 1 поднимают краном, вынимают разрезанное на части кольцо 3, устанавливают его в нужную из проточек 2 вверх или вниз буртом 4 в зависимости от необходимой высоты подъема или опускания вала 1 подвижного

cone and then lowered into place.

конуса и после этого опускают его на место.

Replacement threaded coupling smooth cylindrical surfaces eliminates the failure of the mating parts

---

Замена резьбового сопряжения гладкими цилиндрическими поверхностями исключает выход из строя сопрягаемых деталей

and the accident rate for this reason.

и аварийность по этой причине.

When the upper support according to the invention is not treblyutsya investment of time and great efforts to control the gap, manual operation is reduced to only

---

При выполнении верхней опоры согласно изобретению не треблются затраты времени и большие усилия для регулирования щели, ручная операция сводится лишь к

Installation of the ring at the cut.

установке разрезанного на части кольца.

Claim

Формула изобретения

Upper support movable conical crusher head fractions / ki mechanical coarse crushing with the crushing gap regulation comprising slotted cone sleeve mounted coaxially on the shank of the shaft of the movable cage .traversy cone, characterized in that, in order to increase the reliability of the support and reducing the complexity of repairs the movable shaft cone shank formed with annular recesses provided and installed in one of the locking ring grooves, cutting simply supported on the end of the cone sleeve.

Верхняя опора подвижного дробящего конуса конусной дробил/ки крупного дробления с механическим регулированием разгрузочной щели, содержащая разрезную конусную втулку, установленную соосно на хвостовике вала подвижного конуса в обойме .траверсы, отличающаяся тем, что, с целью повышения надежности опоры и снижения трудоемкости ремонтных работ, хвостовик вала подвижного конуса выполнен с кольцевыми проточками и снабжен установленным в одной из проточек стопорным кольцом, опертым на торец разрезной конусной втулки.

The sources of information taken into consideration in the examination:

Источники информации, принятые во внимание при экспертизе:

1. Muyzemnek Yu Cone Crusher. M., "Mechanical Engineering, 1970, p. IOil.

---

1. Муйземнек Ю. А. Конусная дробилка. М., «Машиностроение, 1970, с. IOil.

2. Donchenko A. et al. Maintenance and repair of crushing equipment, M.,

2. Донченко А. С. и др. Эксплуатация и ремонт дробильного оборудования, М.,

"Nedra, 1972, p. 70.

«Недра, 1972, с. 70.

Patent Translate
Powered by EPO and Google

Notice

This translation is machine-generated. It cannot be guaranteed that it is intelligible, accurate, complete, reliable or fit for specific purposes. Critical decisions, such as commercially relevant or financial decisions, should not be based on machine-translation output.

CLAIMS SU718160

The invention relates to a gyratory cone crushers primary crushing, or more precisely to the upper supports of the movable crushing cone crushers such.

Изобретение относится к конусным гирационным дробилкам крупного дробления, точнее к верхним опорам подвижного дробящего конуса таких дробилок.

Most common is the upper support structure comprising a tapered sleeve mounted on the shaft of the cone, and a cylindrical sleeve mounted in the bore of one traverse. When the crusher cone sleeve, participating in the gyratory movement of the crushing cone, driven around the inner surface of the cylindrical sleeve, handing it efforts resulting from the split. With the right choice of materials bushings, lubrication regime and gaps such support, in spite of the linear contact bushings, has a higher durability and reliability than conventional support structure with surface contact elements.

Наибольшее распространение имеет конструкция верхней опоры, содержащей конусную втулку, закрепленную на валу конуса, И цилиндрическую втулку, установленную в расточке траверсы 1. При работе дробилки конусная втулка, участвуя в гирационном движении дробящего конуса, обкатывается по внутренней поверхности цилиндрической втулки, передавая на нее усилия, возникающие при дроблении. При правильном выборе материалов втулок, режима смазки и зазоров такая опора, несмотря на линейный характер контакта втулок, обладает более высокой долговечностью И надежностью, чем известные конструкции опор с поверхностным контактом элементов.

The disadvantage lies in the fact that under the influence of inertia on the idle collet is pressed against its rear side cylinder, whereby forming a linear contact point becomes, which leads to the

formation of burrs and reduces the useful life of the suspension.

Недостаток ее заключается в том, что под влиянием СИЛЫ инерции на холостом ходу конусная втулка прижимается к цилиндрической своей ТЫЛЬНОЙ стороной, в результате чего линейный контакт образующих переходит в точечный, что ведет к образованию задиров И снижает срок службы подвеса.

Attempts have been made to eliminate this disadvantage by making the inside of the working surface of the cylindrical sleeve of the curved shape. In this case, by forming a line contact pin is replaced by two eccentric circles, t. E. A point contact is formed and hence the operating voltages in the contact zone should increase substantially, which also reduces the life support /

Известна попытка устранить этот недостаток путем придания внутренней рабочей поверхности цилиндрической втулки криволинейного очертания. В этом случае линейный контакт по образующим заменяется контактом по двум эксцентричным окружностям, т. е. образуется точечный контакт И, следовательно, рабочие напряжения в зоне контакта должны существенно возрасти, что также приводит к снижению срока службы опоры/

In its technical essence the closest to this invention is the upper support cone MOBILE gyratory crusher comprising a fixed shaft MOBILE cone sleeve in the form of two cones conjugate large bases disposed in a cylindrical sleeve mounted in the bore of the crosshead.

По своей технической сущности наиболее близкой к изобретению является верхняя опора ПОДВИЖНОГО конуса гирационной дробилки, содержащей закрепленную на валу ПОДВИЖНОГО конуса втулку в форме двух конусов, сопряженных большими основаниями, размещенную в цилиндрической втулке, установленной в расточке траверсы .

Said support having a shape approximating to the ball, has almost the same drawbacks as the above-mentioned support, although few exceed their durability.

Указанная опора, имея форму, приближающуюся к шаровой, обладает практически теми же недостатками, что и вышеназванные опоры, хотя И несколько превосходит ИХ по долговечности.

The aim of invention is to increase the durability of the upper support.

Целью изобретения является повышение долговечности верхней опоры.

This object is achieved in that the movable upper support cone gira

---

Указанная цель достигается тем, что в верхней опоре подвижного конуса гира

Союз Советских Социалистических Республик

Государственный комитет СССР по делам изобретений и открытий

ОПИСАНИЕ ИЗОБРЕТЕНИЯ
К АВТОРСКОМУ СВИДЕТЕЛЬСТВУ

(11) 718160

(61) Дополнительное к авт. свид-ву —

(22) Заявлено 16.06.78 (21) 2629430/29-33

с присоединением заявки № —

(23) Приоритет —

(43) Опубликовано 28.02.80. Бюллетень № 8

(45) Дата опубликования описания 28.02.80

(51) М. Кл.² В 02С 2/04

(53) УДК 621.926.3 (088.8)

(72) Автор изобретения Ю. А. Муйземнек

(71) Заявитель Уральский дважды ордена Ленина, ордена Октябрьской Революции, ордена Красного Знамени, Ордена Отечественной войны I-й степени, ордена Трудового Красного Знамени и ордена «Красное Знамя Труда» завод тяжелого машиностроения им. Серго Орджоникидзе «Уралмашзавод»

(54) ВЕРХНЯЯ ОПОРА ПОДВИЖНОГО КОНУСА ГИРАЦИОННОЙ ДРОБИЛКИ

1

Изобретение относится к конусным гирационным дробилкам крупного дробления, точнее к верхним опорам подвижного дробящего конуса таких дробилок.

Наибольшее распространение имеет конструкция верхней опоры, содержащей конусную втулку, закрепленную на валу конуса, и цилиндрическую втулку, установленную в расточке траверсы [1]. При работе дробилки конусная втулка, участвуя в гирационном движении дробящего конуса, обкатывается по внутренней поверхности цилиндрической втулки, передавая на нее усилия, возникающие при дроблении. При правильном выборе материалов втулок, режима смазки и зазоров такая опора, несмотря на линейный характер контакта втулок, обладает более высокой долговечностью и надежностью, чем известные конструкции опор с поверхностным контактом элементов.

Недостаток ее заключается в том, что под влиянием силы инерции на холостом ходу конусная втулка прижимается к цилиндрической своей тыльной стороной, в результате чего линейный контакт образующих переходит в точечный, что ведет к образованию задиров и снижает срок службы подвеса.

2

Известна попытка устранить этот недостаток путем придания внутренней рабочей поверхности цилиндрической втулки криволинейного очертания. В этом случае линейный контакт по образующим заменяется контактом по двум эксцентричным окружностям, т. е. образуется точечный контакт и, следовательно, рабочие напряжения в зоне контакта должны существенно возрасти, что также приводит к снижению срока службы опоры.

По своей технической сущности наиболее близкой к изобретению является верхняя опора подвижного конуса гирационной дробилки, содержащей закрепленную на валу подвижного конуса втулку в форме двух конусов, сопряженных большими основаниями, размещенную в цилиндрической втулке, установленной в расточке траверсы [2].

Указанная опора, имея форму, приближающуюся к шаровой, обладает практически теми же недостатками, что и вышеназванные опоры, хотя и несколько превосходит их по долговечности.

Целью изобретения является повышение долговечности верхней опоры.

Указанная цель достигается тем, что в верхней опоре подвижного конуса гира-

ционной дробилки, содержащей закрепленную на валу подвижного конуса втулку в форме двух конусов, сопряженных большими основаниями, размещенную в цилиндрической втулке, установленной в расточке траверсы, поверхности сопряженных конусов втулки выполнены с равной конусностью, соответствующей углу прецессии подвижного конуса.

На чертеже изображена верхняя опора конусной дробилки. Опора состоит из цилиндрической втулки 1 и плоской опорной шайбы 2, установленных в расточке траверсы, и конусной втулки 3, установленной на валу дробящего конуса 4. Соединение вала конуса с конусной втулкой осуществляется разрезной гайкой 5. Конусная втулка 3 снабжена основной конической поверхностью 6 и обратной конической поверхностью 7. Обе поверхности имеют одинаковую конусность, соответствующую углу прецессии дробящего конуса.

Во время нормальной работы усилия в зоне дробления отжимают дробящий конус так, что втулка 3 прижимается к втулке 1 своей основной конической поверхностью, как это изображено на чертеже. На холостом ходу силы инерции, действующие на конус, прижимают втулку 3 к втулке 1 обратной конической поверхностью. При этом напряжения в зоне контакта втулок при дроблении и на холостом ходу оказываются одинаковыми, благодаря чему обеспечивается равномерный износ втулок, исключаются местные задиры и обеспечивается надежная работа опоры в целом.

Таким образом, положительный эффект изобретения заключается в том, что благодаря исключения местного износа втулок опор обеспечивается значительное увеличение их срока службы и снижение простоев дробилки при ремонте опоры.

Формула изобретения

Верхняя опора подвижного конуса гирационной дробилки, содержащая закрепленную на валу подвижного конуса втулку в форме двух конусов, сопряженных большими основаниями, размещенную в цилиндрической втулке, установленной в расточке траверсы, отличающаяся тем, что, с целью увеличения срока службы опоры, поверхности сопряженных конусов втулки выполнены с равной конусностью, соответствующей углу прецессии подвижного конуса.

Источники информации,
принятые во внимание при экспертизе

1. Муйземнек Ю. А. и др. Конусные дробилки. М., «Машиностроение», 1970, с. 99—101, рис. 63 и 64.

2. Патент Франции № 1294273, кл. В 02С, 1962.

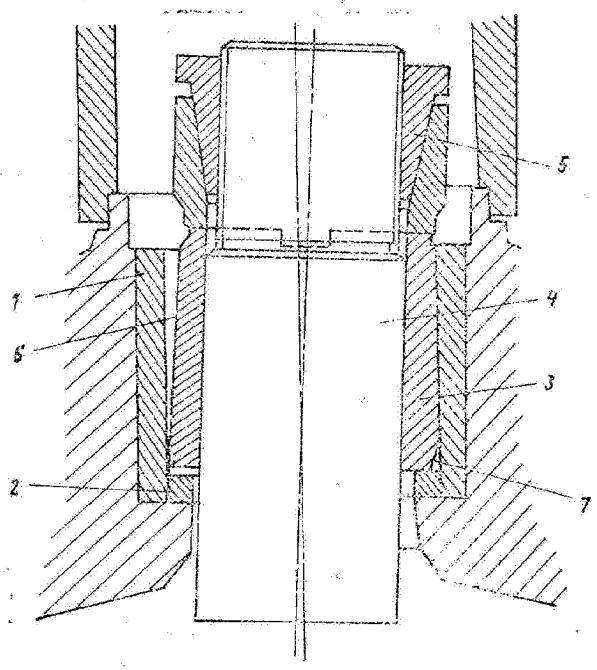

Составитель В. Губарев

Редактор Е. Дайч Техред В. Серякова Корректор Р. Беркович

Заказ 2910/1 Изд. № 155 Тираж 698 Подписное
НПО «Поиск» Государственного комитета СССР по делам изобретений и открытий
113035, Москва, Ж-35, Раушская наб., д. 4/5

Типография, пр. Сапунова, 2

Electronic Patent Application Fee Transmittal

Application Number:	
Filing Date:	
Title of Invention:	GYRATORY CRUSHER MAIN SHAFT AND ASSEMBLY
First Named Inventor/Applicant Name:	AXEL BERGMAN
Filer:	Corinne R. Gorski
Attorney Docket Number:	SC 14208WOUS

Filed as Large Entity

Filing Fees for U.S. National Stage under 35 USC 371

Description	Fee Code	Quantity	Amount	Sub-Total in USD($)
Basic Filing:				
National Stage Fee	1631	1	280	280
Natl Stage Search Fee - Report provided	1642	1	480	480
National Stage Exam - all other cases	1633	1	720	720
Pages:				
Claims:				
Miscellaneous-Filing:				
Petition:				
Patent-Appeals-and-Interference:				

Description	Fee Code	Quantity	Amount	Sub-Total in USD($)
Post-Allowance-and-Post-Issuance:				
Extension-of-Time:				
Miscellaneous:				
			Total in USD ($)	**1480**

Electronic Acknowledgement Receipt

EFS ID:	25742436
Application Number:	15035774
International Application Number:	PCT/EP2014/060594
Confirmation Number:	3999
Title of Invention:	GYRATORY CRUSHER MAIN SHAFT AND ASSEMBLY
First Named Inventor/Applicant Name:	AXEL BERGMAN
Customer Number:	78686
Filer:	Corinne R. Gorski
Filer Authorized By:	
Attorney Docket Number:	SC 14208WOUS
Receipt Date:	11-MAY-2016
Filing Date:	
Time Stamp:	10:15:06
Application Type:	U.S. National Stage under 35 USC 371

Payment information:

Submitted with Payment	yes
Payment Type	Deposit Account
Payment was successfully received in RAM	$1480
RAM confirmation Number	8753
Deposit Account	505792
Authorized User	GORSKI, CORINNE R.
The Director of the USPTO is hereby authorized to charge indicated fees and credit any overpayment as follows:	

File Listing:

Document Number	Document Description	File Name	File Size(Bytes)/ Message Digest	Multi Part /.zip	Pages (if appl.)
1	Transmittal of New Application	14208WOUStransmittalform.pdf	219623 0c5073ce1f70060885575d8aeccda81c2622f222	no	4
Warnings:					
Information:					
2	Application Data Sheet	14208WOUSADS.pdf	1517963 c29729a804c811a2fda240b859a1d80adbccd47a	no	9
Warnings:					
Information:					
3	Documents submitted with 371 Applications	P14208WO2015070993.pdf	894442 0c9d98315238b9a213b91b175d8435dbc887076a	no	22
Warnings:					
Information:					
4	Documents submitted with 371 Applications	14208WOpctib308.pdf	479155 e646be44f8e6fd69aa365de9aeb9e157879d1389	no	1
Warnings:					
The page size in the PDF is too large. The pages should be 8.5 x 11 or A4. If this PDF is submitted, the pages will be resized upon entry into the Image File Wrapper and may affect subsequent processing					
Information:					
5	Preliminary Amendment	SC14208WOUSPreliminaryAmendment.pdf	34518 f3c1e1cb09c1be7e386d4efc7704ac21173fe344	no	8
Warnings:					
Information:					
6	Information Disclosure Statement (IDS) Form (SB08)	14208WOUSIDS.pdf	627344 ce65ef4724065c2573547883d397dc14141d5e66	no	5
Warnings:					
Information:					
7	Foreign Reference	SU940837.pdf	423506 6556f74cf54cb03058499c4f6d3299f571e567bc	no	10
Warnings:					
Information:					

8	Foreign Reference	FR2492022.pdf	8086437 1905287df93c0fecc54f9b37c2a42297c7e4431c	no	17
Warnings:					
Information:					
9	Foreign Reference	FR531391.pdf	3173256 6cbdf2fa5fd10d974cdc910bbe22c9c1300fc683	no	5
Warnings:					
Information:					
10	Foreign Reference	SU718160.pdf	4524686 16a73915291ff513ecbd5fd61064ae1ea2a2de04	no	12
Warnings:					
Information:					
11	Fee Worksheet (SB06)	fee-info.pdf	35340 14bea848875bc7f6d240cacfef1d0fdf87e8a34b	no	2
Warnings:					
Information:					
		Total Files Size (in bytes):	20016270		

This Acknowledgement Receipt evidences receipt on the noted date by the USPTO of the indicated documents, characterized by the applicant, and including page counts, where applicable. It serves as evidence of receipt similar to a Post Card, as described in MPEP 503.

New Applications Under 35 U.S.C. 111

If a new application is being filed and the application includes the necessary components for a filing date (see 37 CFR 1.53(b)-(d) and MPEP 506), a Filing Receipt (37 CFR 1.54) will be issued in due course and the date shown on this Acknowledgement Receipt will establish the filing date of the application.

National Stage of an International Application under 35 U.S.C. 371

If a timely submission to enter the national stage of an international application is compliant with the conditions of 35 U.S.C. 371 and other applicable requirements a Form PCT/DO/EO/903 indicating acceptance of the application as a national stage submission under 35 U.S.C. 371 will be issued in addition to the Filing Receipt, in due course.

New International Application Filed with the USPTO as a Receiving Office

If a new international application is being filed and the international application includes the necessary components for an international filing date (see PCT Article 11 and MPEP 1810), a Notification of the International Application Number and of the International Filing Date (Form PCT/RO/105) will be issued in due course, subject to prescriptions concerning national security, and the date shown on this Acknowledgement Receipt will establish the international filing date of the application.

PCT

Print Out (Original in Electronic Form)

VIII-2-1	**Declaration: Entitlement to apply for and be granted a patent** Declaration as to the applicant's entitlement, as at the international filing date, to apply for and be granted a patent (Rules 4.17(ii) and 51bis.1(a)(ii)), in a case where the declaration under Rule 4.17(iv) is not appropriate: Name (LAST, First)	In relation to this international application SANDVIK INTELLECTUAL PROPERTY AB is entitled to apply for and be granted a patent by virtue of the following:
VIII-2-1(iv)		an assignment from BERGMAN, Axel to SANDVIK INTELLECTUAL PROPERTY AB, dated 14 November 2013 (14.11.2013)
VIII-2-1(iv)		an assignment from LARSSON, Mikael M to SANDVIK INTELLECTUAL PROPERTY AB, dated 12 November 2013 (12.11.2013)
VIII-2-1(iv)		an assignment from MALMQVIST, Patric to SANDVIK INTELLECTUAL PROPERTY AB, dated 12 November 2013 (12.11.2013)
VIII-2-1(iv)		an assignment from HALLBERG, Anders to SANDVIK INTELLECTUAL PROPERTY AB, dated 12 November 2013 (12.11.2013)
VIII-2-1(iv)		an assignment from NILSSON, Matts-Åke to SANDVIK INTELLECTUAL PROPERTY AB, dated 12 November 2013 (12.11.2013)
VIII-2-1(iv)		an assignment from ERIKSSON, Fredrik to SANDVIK INTELLECTUAL PROPERTY AB, dated 13 November 2013 (13.11.2013)
VIII-2-1(iv)		an assignment from ERIKSSON, Bengt-Arne to SANDVIK INTELLECTUAL PROPERTY AB, dated 12 November 2013 (12.11.2013)
VIII-2-1(iv)		an assignment from HOLOMBERG, Anne to SANDVIK INTELLECTUAL PROPERTY AB, dated 12 November 2013 (12.11.2013)

Europäisches Patentamt
European Patent Office
Office européen des brevets

Bescheinigung	Certificate	Attestation
Die angehefteten Unterlagen stimmen mit der als ursprünglich eingereicht geltenden Fassung der auf dem nächsten Blatt bezeichneten europäischen Patentanmeldung überein.	The attached documents are exact copies of the text in which the European patent application described on the following page is deemed to have been filed.	Les documents joints à la présente attestation sont conformes au texte, considéré comme initialement déposé, de la demande de brevet européen qui est spécifiée à la page suivante.

Patentanmeldung Nr.	**Patent application No.**	**Demande de brevet n°**

13192402.9 / EP13192402

The organization code and number of your priority application, to be used for filing abroad under the Paris Convention, is EP13192402.

Der Präsident des Europäischen Patentamts;
Im Auftrag

For the President of the European Patent Office

Le President de l'Office européen des brevets
p.o.

V. Joseph

DD50333

Anmeldung Nr:
Application no.: 13192402.9
Demande no :

Anmeldetag:
Date of filing: 12.11.13
Date de dépôt :

Anmelder / Applicant(s) / Demandeur(s):

Sandvik Intellectual Property AB
811 81 Sandviken/SE

Bezeichnung der Erfindung / Title of the invention / Titre de l'invention:
(Falls die Bezeichnung der Erfindung nicht angegeben ist, oder falls die Anmeldung in einer Nicht-Amtssprache des EPA eingereicht wurde, siehe Beschreibung bezüglich ursprünglicher Bezeichnung.
If no title is shown, or if the application has been filed in a non-EPO language, please refer to the description for the original title.
Si aucun titre n'est indiqué, ou si la demande a été déposée dans une langue autre qu'une langue officielle de l'OEB, se référer à la description pour le titre original.)

Gyratory crusher main shaft and assembly

In Anspruch genommene Priorität(en) / Priority(Priorities) claimed / Priorité(s) revendiquée(s)
Staat/Tag/Aktenzeichen / State/Date/File no. / Pays/Date/Numéro de dépôt:

Am Anmeldetag benannte Vertragstaaten / Contracting States designated at date of filing / Etats contractants désignées lors du dépôt:

AL AT BE BG CH CY CZ DE DK EE ES FI FR GB GR HR HU IE IS IT LI LT LU LV MC MK MT NL NO PL PT RO RS SE SI SK SM TR

Gyratory Crusher Main Shaft and Assembly

Field of invention

The present invention relates to a gyratory crusher main shaft and main shaft assembly for positioning within a gyratory crusher and in particular, although not exclusively, to a main shaft having an axial upper end region that tapers radially inward and comprises at least one groove to receive a pressurised fluid to facilitate mounting and demounting of a sleeve at the shaft.

Background art

Gyratory crushers are used for crushing ore, mineral and rock material to smaller sizes. Typically, the crusher comprises a crushing head mounted upon an elongate main shaft. A first crushing shell is mounted on the crushing head and a second crushing shell is mounted on a frame such that the first and second crushing shells define together a crushing chamber through which the material to be crushed is passed.

The gyratory pendulum movement of the crushing head is supported by a lower bearing assembly positioned below the crushing head and a top bearing into which an upper end of the main shaft is journalled. Typically, the main shaft upper end is protected against wear by a sleeve. Commonly, the protective sleeve comprises a cylindrical geometry and is held at the main shaft via an interference or friction fit. Example protective sleeves are disclosed in US 1,402,255; US 1,592,313; US 1,748,102; RU 718160; US 4,027,825; RU 940837 and US 5,934,583.

However, a number of problems exist with conventional protective sleeves. In particular, if the time taken to friction fit the heated sleeve onto the main shaft end is too great it is not uncommon for the sleeve to cool and shrink before it is forced onto the shaft to the correct and final position. Additionally, disassembly is often problematic as the sleeve is required to be cut before it can be removed. On large crushers, protective sleeves have a substantial wall thickness and this cutting operation can be time and labour intensive with the added risk of potential damage to the shaft. Conventional mounting and dismounting procedures, due to the design of the main shaft and sleeve, are therefore disadvantageous in that they pose a risk of damage to the main shaft (and other components), injury to personnel and unacceptably long downtime of the crusher during repair and maintenance. Accordingly, what is required is a main shaft and main shaft assembly having a sleeve that addresses the above problems.

Summary of the Invention

It is an objective of the present invention to provide a gyratory crusher main shaft and a main shaft assembly (having a sleeve) that enables convenient mounting and dismounting of the protective sleeve at the upper end of the shaft that obviates a requirement for excessive heating of the main shaft and the use of grinding and cutting apparatus that otherwise carries a risk of damage to the main shaft and injury to service personnel.

It is a further specific objective of the present invention to provide a main shaft and sleeve assembly that facilitates mounting and dismounting of the sleeve at the shaft via control of

a pressurised fluid delivered to the region of an axially upper end of the shaft radially between the shaft and the sleeve.

The objectives are achieved by providing a main shaft comprising at least one groove or channel indented on an outward facing external surface of the shaft. The groove is configured and dimensioned to receive a fluid under pressure to force separation of the sleeve from the main shaft. Providing the groove at the main shaft as opposed to the sleeve, is advantageous to maintain the strength and integrity of the sleeve to avoid fracture or splitting in response to the introduction of the pressurised fluid radially between the main shaft and the sleeve. The present invention is advantageous to allow the fluid to be introduced into the region between the main shaft and the sleeve via different routing options including in particular i) a conduit extending axially and/or radially at and/or within the main shaft and ii) a supply conduit extending through the sleeve wall. Reference to the conduit extending axially encompasses the conduit being aligned transverse or parallel to the longitudinal axis of the main shaft.

As will be appreciated, the subject invention is compatible for use with existing fluid supply arrangements including conduits, pumps, fluid reservoirs, seals, gaskets etc.

According to a specific aspect of the present invention there is provided a gyratory crusher main shaft comprising: a shaft body having a radially outward facing external surface and having a first end for positioning at a lower region of the crusher and a second end for positioning at an upper region of the crusher relative to the first end; an axial region of the shaft body extending from the second end is tapered relative to a longitudinal axis of the shaft body such that a cross sectional area of the shaft body at the tapered region decreases in a direction from the first end to the second end, the tapered region configured to mount a shaft sleeve; characterised by: at least one groove indented at the external surface and positioned at the tapered region and capable of receiving a pressurised fluid to facilitate mounting and dismounting of the sleeve at the shaft body.

The subject invention provides for the convenient and efficient mounting and dismounting of the sleeve at the main shaft by virtue of the combination of the fluid filled grooves or

channels, at the external surface of the main shaft and the radially tapered end section of the main shaft onto which the sleeve is mounted. Without this radially tapered upper end section, the sleeve would still require significant manual intervention to provide axial movement over the surface of the shaft. The conical profiled and grooved main shaft section in combination with a corresponding tapered sleeve is therefore advantageous to firstly allow the fluid to be introduced and then to greatly facilitate and provide immediate axial movement of the sleeve relative to the main shaft.

Preferably, the main shaft further comprises a fluid inlet conduit extending axially from the second end and provided in fluid communication with the groove to allow a fluid to be supplied to the groove from the second end. Positioning the inlet conduit internally at the main shaft is advantageous to avoid routing the fluid through the sleeve which would otherwise require modification and a potential weakening of the sleeve and in particular the sleeve wall. Preferably, the conduit extends internally within the shaft body such that a part of the conduit extends radially outward to the groove. Optionally, at least a part of the conduit is indented and extends axially at the external surface as a channel. The channel may preferably extend axially at the external surface between a plurality of grooves to couple the grooves in fluid communication. Such an arrangement is advantageous to reduce the axial length of any internal bore through the main shaft. Minimising an axial length of an internally extending fluid supply conduit is advantageous during manufacture as the use of very long and thin drills should be avoided. A channel or groove indented on the external surface of the main shaft is therefore more convenient and efficient for manufacture.

Preferably, the groove extends in a circumferential direction around the shaft body. More preferably, the groove extends substantially completely circumferentially around the shaft body. The circumferentially extending groove is advantageous to provide a supply of fluid in a circumferential direction between the main shaft and the sleeve to ensure a uniform expansion pressure and lubrication during dismounting and mounting. Accordingly, '*dry*' regions that could otherwise lead to '*sticking*' or '*freezing*' are avoided.

Preferably, the main shaft comprises a plurality of grooves at the external surface. This configuration provides that the fluid is supplied to different axial regions between the main shaft and sleeve to facilitate uniform delivery and dispersion of the fluid between the respective contact surfaces. Optionally, the main shaft comprises a first groove extending in a circumferential direction around the shaft body and second groove extending in a circumferential direction around the shaft body, the first groove separated axially from the second groove and coupled in fluid communication, optionally via one or more axially extending channels. Preferably, the first groove and the second groove are separated axially by an equal distance from a cross sectional area centre of the sleeve. Accordingly, the expansion force imparted to the sleeve is distributed uniformly along the axial length of the sleeve to both facilitate mounting and dismounting and avoid fracture or distortion of the sleeve. Reference to the '*cross sectional centre*' refers to the cross section through the sleeve in an axial plane extending parallel to the longitudinal axis of the sleeve (and the main shaft). As the sleeve comprises a wall that is tapered according to a conical configuration, the cross sectional centre is positioned closer to the upper axial end of the sleeve having the thicker wall thickness relative to the alternate lower axial end.

According to a second aspect of the present invention there is provided a gyratory crusher main shaft assembly comprising: a shaft body as claimed herein; a sleeve fitted over the tapered region, the sleeve having a tapered wall thickness such that a wall thickness at a second upper end of the sleeve is greater than a wall thickness at a first lower end of the sleeve.

Preferably, the assembly further comprises an end retainer releasably mounted at the second end of a shaft body and having a perimeter region extending radially outward beyond the external surface at the tapered region, the perimeter region positioned to radially overlap the sleeve at the second end of the sleeve to inhibit axial separation of the sleeve from the shaft body. Preferably, the retainer is releasably attached to the shaft during mounting and dismounting procedures via a plurality of attachment elements and in particular bolts or screws.

Preferably, the retainer comprises a disc-like configuration having a recess extending circumferentially at the perimeter region to allow axial movement of the sleeve into the recess. Such an arrangement is advantageous to allow a controlled axial movement of the sleeve during dismounting in response to introduction of the pressurised fluid but to inhibit complete axial separation of the sleeve from the main shaft by abutment with the retainer. Naturally, the sleeve may be removed once the retainer has been removed from the main shaft end. The retainer is also configured to force the sleeve over and about the main shaft by axial advancement of suitable attachment bolts, screws and the like.

Preferably, the assembly further comprises a fluid inlet conduit extending axially from the second end of the shaft body in fluid communication with the groove to allow a fluid to be supplied to the groove from the second end.

According to a specific embodiment, the assembly may optionally comprise a fluid inlet conduit extending radially through the wall of the sleeve in fluid communication with the groove to allow a fluid to be supplied to the groove through the sleeve.

According to a third aspect of the present invention there is provided a gyratory crusher comprising a main shaft or main shaft assembly as claimed herein.

Brief description of drawings

A specific implementation of the present invention will now be described, by way of example only, and with reference to the accompanying drawings in which:

Figure 1 is a cross sectional side view of a gyratory crusher having a main shaft supported at its upper end by a top bearing assembly and having a protective sleeve mounted about the upper end of the main shaft according to a specific implementation of the present invention;

Figure 2 is a perspective partial cross section through the upper end of the main shaft and sleeve assembly;

Figure 3 is a perspective partial cross section of the shaft upper end of figure 2 with the protective sleeve removed;

Figure 4 is a further external perspective view of the tapered axial section of the main shaft upper end of figure 3.

Detailed description of preferred embodiment of the invention

Referring to figure 1, a crusher comprises a frame 100 having an upper frame 101 and a lower frame 102. A crushing head 103 is mounted upon an elongate shaft 107 having a longitudinal axis 115. A first (inner) crushing shell 105 is fixably mounted on crushing head 103 and a second (outer) crushing shell 106 is fixably mounted at upper frame 101. A crushing zone 104 is formed between the opposed crushing shells 105, 106. A discharge zone 109 is positioned immediately below crushing zone 104 and is defined, in part, by lower frame 102.

A drive (not shown) is coupled to main shaft 107 via a drive shaft 108 and suitable gearing 116 so as to rotate shaft 107 eccentrically about a longitudinal axis 126 of the crusher and to cause head 103 to perform a gyratory pendulum movement and crush material introduced into crushing chamber 104. A first (axial upper) end region 113 of shaft 107 is maintained in a rotatable position by a top-end bearing assembly 112 positioned intermediate between main shaft 107 and a central boss 117. Similarly, a second (axial bottom) end 118 of shaft 107 is supported by a bottom-end bearing assembly 119. Upper frame 101 is divided into an upper frame part (commonly termed a topshell 111) mounted upon lower frame part 102 (commonly termed a bottom shell), and a spider assembly 114 having arms 110 that extend from topshell 111 and represents an upper portion of the crusher.

Upper end region 113 comprises a radial taper that defines an upper conical region of main shaft 107. The conical region 113 is tapered so as to decrease in cross sectional area in a direction from shaft second (lower) end 118 to an upper end surface 123 positioned

uppermost within the crusher. To avoid excessive wear of the conical region 113, by contact with bearing assembly 112, a substantially cylindrical wear sleeve 124 is mounted over and about region 113. Sleeve 124 is held in position at region 113 by an interference or friction fit and is provided in close touching contact over an axial length of both sleeve 124 and region 113. Accordingly, sleeve 124 is positioned radially intermediate bearing assembly 112 and an outer surface of region 113 to absorb the radial and axial loading forces resultant from the crushing action of the gyratory pendulum movement.

To facilitate mounting and dismounting of sleeve 124 at shaft region 113, shaft 107 is configured to enable a fluid to be introduced into the contact region between the sleeve 124 and shaft region 113. In particular, a fluid supply conduit 120 extends axially and radially along shaft 107 (within region 113) from end surface 123 to the contact region between sleeve 124 and region 113. A channel (alternatively termed a groove) 121 is indented within the external facing surface of shaft 107 at region 113 and is provided in fluid communication with conduit 120.

Referring to figures 2 to 4 tapered region 113 comprises a lowermost end 300 and an uppermost end 301. The radial taper is uniform along the axial length between ends 300, 301 such that a cross sectional area decreases from lower end 300 to upper end 301 at a uniform rate to define a frusto-conical region (113) of main shaft 107. Sleeve 124 comprises a first (lower) end 216 for mating at the end 300 of region 113 and a second (upper) end 215 for positioning at uppermost end 301 substantially coplanar with shaft end surface 123. Sleeve 124 comprises a radially inward facing surface 201 and a radially outward facing surface 202 with a substantially cylindrical wall 203 defined between surfaces 201, 202. Wall 203 is tapered so as to decrease in radial thickness from uppermost end 215 to lowermost end 216. In particular, external surface 202 is substantially cylindrical whilst internal surface 201 comprises a conical shape profile corresponding to the conical shape profile of main shaft region 113. Region A, illustrated in figure 2, corresponds to a mid-axial length position as defined by the cross sectional area of wall 203 (in a plane extending along axis 115) such that the cross sectional area axially above region A is equal to the cross sectional area axially below region A. Sleeve 124 and in particular radially inward facing surface 201 is mated in close fitting contact with the

external facing surface 200 of main shaft region 113 between respective lower (216, 300) and upper (215, 301) ends.

Sleeve lower end 216 comprises a chamfer region 207 of decreasing wall thickness such that very a lowermost end region of sleeve 124 is chamfered to sit close to a radius section of main shaft region 113 below region end 300.

A disc-like retainer 125 is releasably mounted over shaft end surface 123 during mounting and dismounting of sleeve 124 at main shaft region 113. Retainer 125 comprises a suitable bore 122 aligned coaxially with an end region of conduit 120 to allow fluid to be introduced through retainer 125 to groove 121 via conduit 120. Retaining disc 125 comprises a plurality of perimeter bores 214 distributed circumferentially around retainer 125 immediately inside of a perimeter 209. Bores 214 are configured to receive attachment bolts (not shown) received within corresponding bores (not shown) extending axially from sleeve upper end 215 so as to lock retainer 125 to sleeve 124 during mounting and dismounting procedures. Retainer 125 further comprises a plurality of additional bores 213 positioned radially inside perimeter bores 214 that are configured to receive attachment bolts (not shown) to secure retainer 125 to main shaft region 113. In particular, an underside surface 211 of retainer 125 is positioned in contact and aligned substantially coplanar with the shaft end surface 123. In this orientation, an upward facing retainer surface 212 is orientated away from main shaft 107. An annular recess 210 extends circumferentially around retainer perimeter 209 and is indented in surface 211 so as to create a small axially and radially extending annular gap region immediately axially above the annular sleeve end 215.

Accordingly, during a sleeve dismounting operation, the sleeve attachment bolts (not shown) are removed. Sleeve 124 is capable of sliding axially into the gap region defined by recess 210 to contact the underside surface 211 (at the recess 210) when fluid pressure is applied. In an alternative mounting operation, retainer 125 is inverted such that disc surface 212 is mated against sleeve end 215 and main shaft end surface 123 to force sleeve 124 axially over and about region 113 as the attachment bolts (not shown) are tightened.

Fluid supply conduit 120 comprises an axial section 204 extending downwardly from end surface 123. A lowermost end 206 of axial section 204 is terminated by a radially extending section 205 that terminates at shaft external facing surface 200. A radially outermost end of the conduit section 205 is provided in fluid communication with an axially upper groove 121a that extends circumferentially around shaft region 113.

According to the specific implementation, conical region 113 further comprises a second circumferentially extending groove 121b axially separated from the first upper groove 121a by a distance approximately half the axial length of region 113 and sleeve 124. Additionally, each groove 121a, 121b is spaced axially from region A by an equal axial distance. Grooves 121a and 121b also extend the full 360° circumference of shaft surface 200. An interconnecting fluid flow channel 208 extends axially from upper groove 121a to lower groove 121b to provide fluid communication between the two grooves 121a, 121b.

According to further specific implementations, region 113 may comprise a plurality of interconnecting fluid flow channels 208 distributed circumferentially around surface 200. According to yet further embodiments, region 113 may comprise a single circumferentially extending groove optionally in the form of at least one spiral or helix. According to a further embodiment, external facing surface 200 may comprise a network of grooves orientated and extending axially parallel or transverse to axis 115 and/or in a circumferential direction entirely or partly around the conical surface 200.

The subject invention is compatible for use with conventional fluid supply systems (comprising reservoirs, pumps, conduits, seals etc.) coupled to bore 122 via suitable enclosures or conduits. Accordingly, a fluid is capable of being delivered to grooves 121a, 121b via supply conduits 120, 208 to lubricate the interface between shaft surface 200 and sleeve surface 201. Such an arrangement facilitates both a slide mounting of sleeve 124 and imparts a radial expansion force (to sleeve 124) to promote sleeve demounting.

According to further specific embodiments, shaft region 113 may be devoid of conduit 120 such that sleeve 124 comprises a conduit bore extending through sleeve wall 203 in fluid communication with grooves 121a, 121b and/or channel 208.

Claims

1. A gyratory crusher main shaft (107) comprising:

a shaft body having a radially outward facing external surface (200) and having a first end (118) for positioning at a lower region of the crusher and a second end (123) for positioning at an upper region of the crusher relative to the first end (118);

an axial region (113) of the shaft body extending from the second end (123) is tapered relative to a longitudinal axis (115) of the shaft body such that a cross sectional area of the shaft body at the tapered region (113) decreases in a direction from the first end (118) to the second end (123), the tapered region (113) configured to mount a shaft sleeve (124);

characterised by:

at least one groove (121) indented at the external surface (200) and positioned at the tapered region (113) and capable of receiving a pressurised fluid to facilitate mounting and dismounting of the sleeve (124) at the shaft body.

2. The main shaft as claimed in claim 1 further comprising a fluid inlet conduit (120) extending axially from the second end (123) and provided in fluid communication with the groove (121) to allow a fluid to be supplied to the groove (121) from the second end (123).

3. The main shaft as claimed in claim 2 wherein the conduit (120) extends internally within the shaft body such that a part (205) of the conduit (120) extends radially outward to the groove (121).

4. The main shaft as claimed in claim 3 wherein the groove (121) extends in a circumferential direction around the shaft body.

5. The main shaft as claimed in claim 4 wherein the groove (121) extends substantially completely circumferentially around the shaft body.

6. The main shaft as claimed in claim 5 comprising a plurality of grooves (121a, 121b) at the external surface (200).

7. The apparatus as claimed in claim 6 comprising a first groove (121a) extending in a circumferential direction around the shaft body and second groove (121b) extending in a circumferential direction around the shaft body, the first groove (121a) separated axially from the second groove (121b) and coupled in fluid communication.

8. The main shaft as claimed in claim 7 wherein at least a part of the conduit (120) is indented and extends axially at the external surface (200) as a channel (208) to couple the first (121a) and second (121b) grooves in fluid communication.

9. A gyratory crusher main shaft assembly comprising:

a shaft body as claimed in any preceding claim;

a sleeve (124) fitted over the tapered region (113), the sleeve (124) having a tapered wall thickness such that a wall thickness at a second upper end (215) of the sleeve (124) is greater than a wall thickness at a first lower end (216) of the sleeve(124).

10. The assembly as claimed in claim 9 further comprising an end retainer (125) releasably mounted at the second end (123) of a shaft body and having a perimeter region (209) extending radially outward beyond the external surface (200) at the tapered region (113), the perimeter region (209) positioned to radially overlap the sleeve (124) at the second end (215) of the sleeve (124) to inhibit axial separation of the sleeve (124) from the shaft body.

11. The assembly as claimed in claim 10 wherein the retainer (125) comprises a disc-like configuration having a recess (210) extending circumferentially at the perimeter region (209) to allow axial movement of the sleeve (124) into the recess (210).

12. The assembly as claimed in any one of claims 9 to 11 further comprising a fluid inlet conduit (120) extending axially from the second end (123) of the shaft body in fluid communication with the groove (121) to allow a fluid to be supplied to the groove (121) from the second end (123).

13. The assembly as claimed in any one of claims 9 to 11 further comprising a fluid inlet conduit extending radially through the wall (203) of the sleeve (124) in fluid communication with the groove (121) to allow a fluid to be supplied to the groove (121) through the sleeve (124).

5

14. A gyratory crusher comprising a main shaft or main shaft assembly as claimed in any preceding claim.

Abstract:

A gyratory crusher main shaft assembly in which an axially upper region of the main shaft comprises a tapered conical section with a protective sleeve friction fitted over the cone. To facilitate mounting and dismounting of the sleeve, at least one groove is indented within a radially external facing surface of the main shaft at the region of the cone to allow fluid to be introduced under pressure to the region between the sleeve and the cone.

Figure 2

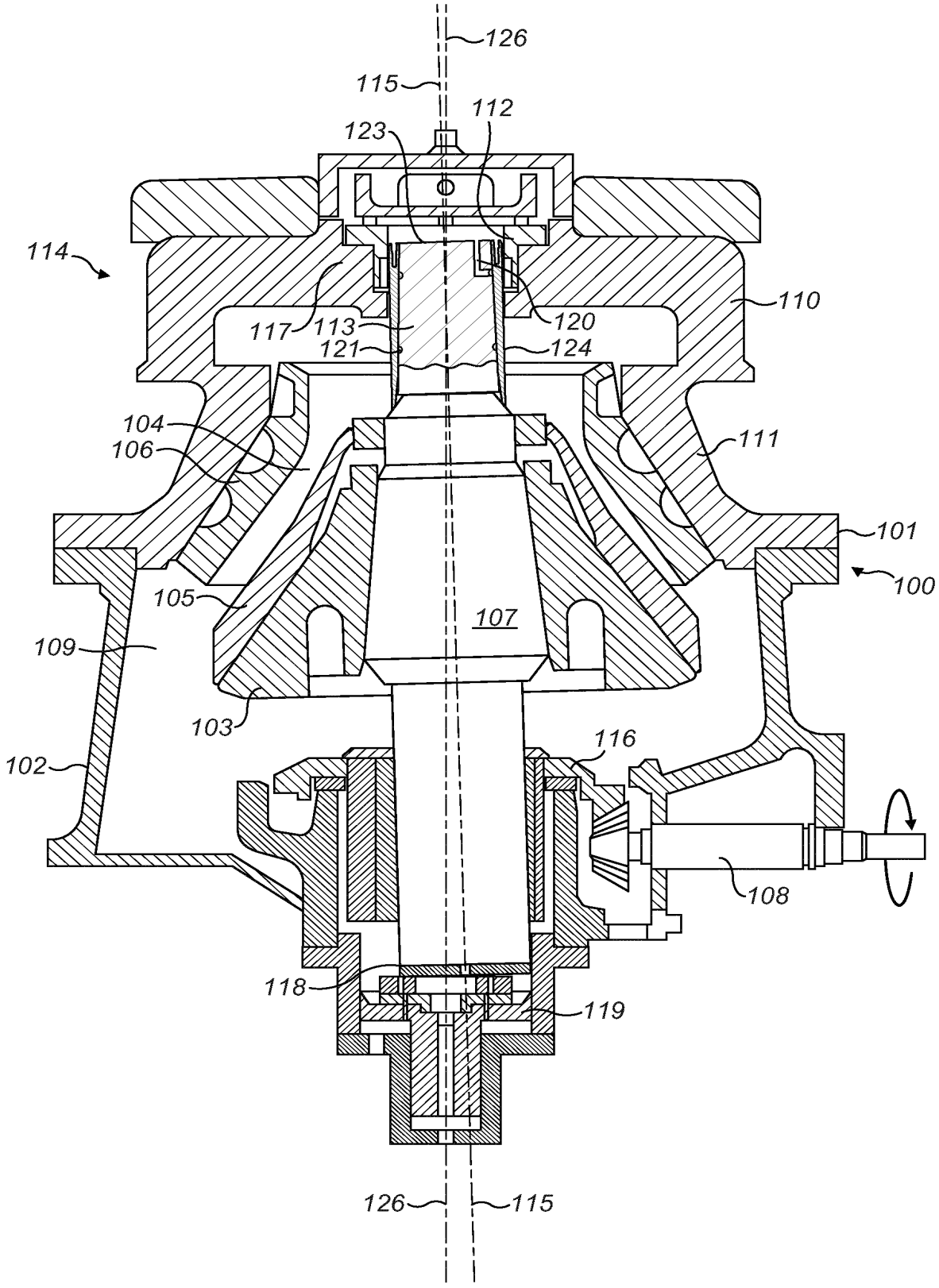
126
115
112
123
114
110
117
113
120
121
124
104
106
111
101
100
105
107
109
103
116
102
108
118
119
126
115

FIG. 1

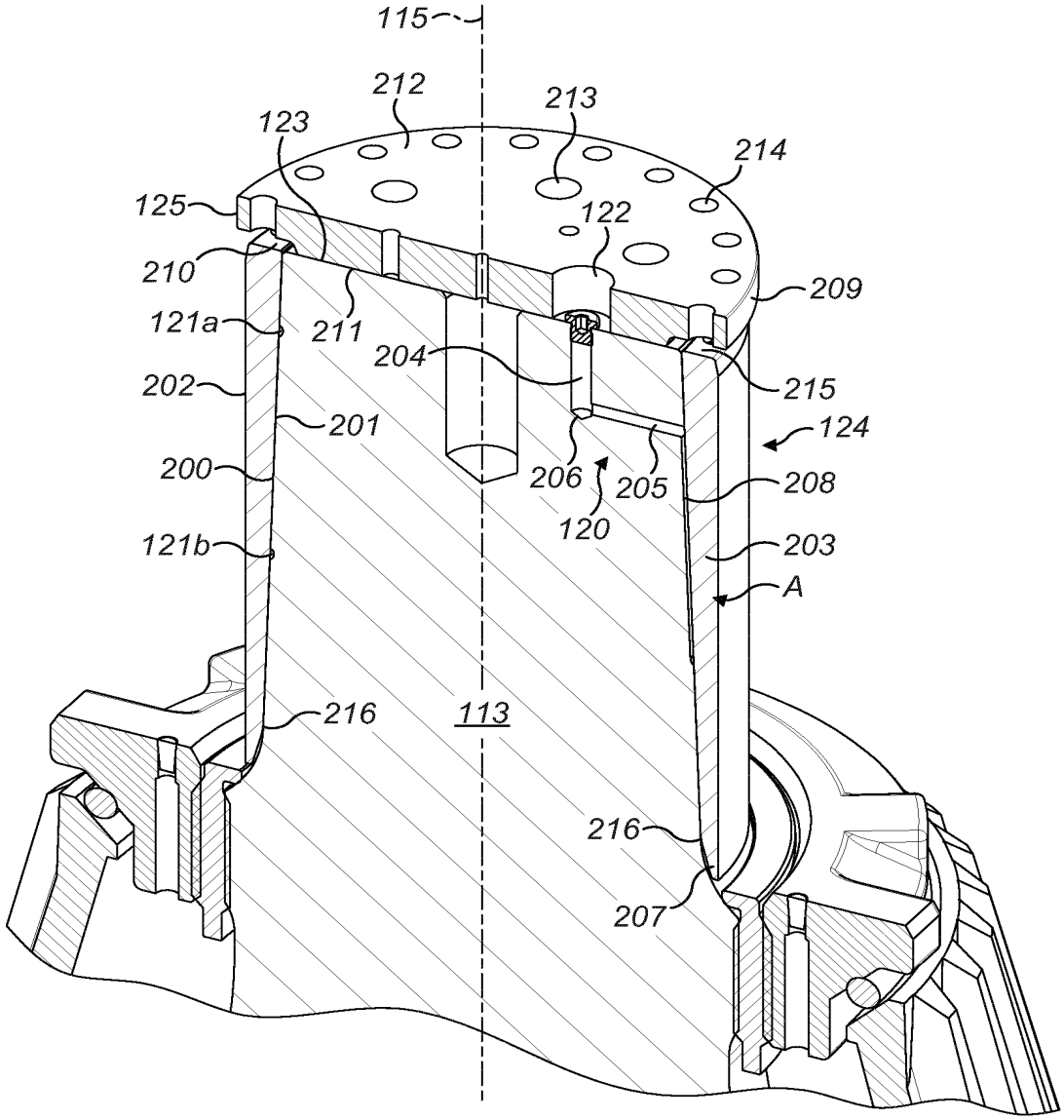
115
212
213
123
214
125
122
210
209
121a
211
204
202
215
201
124
200
206
205
208
120
121b
203
A
216
113
216
207

FIG. 2

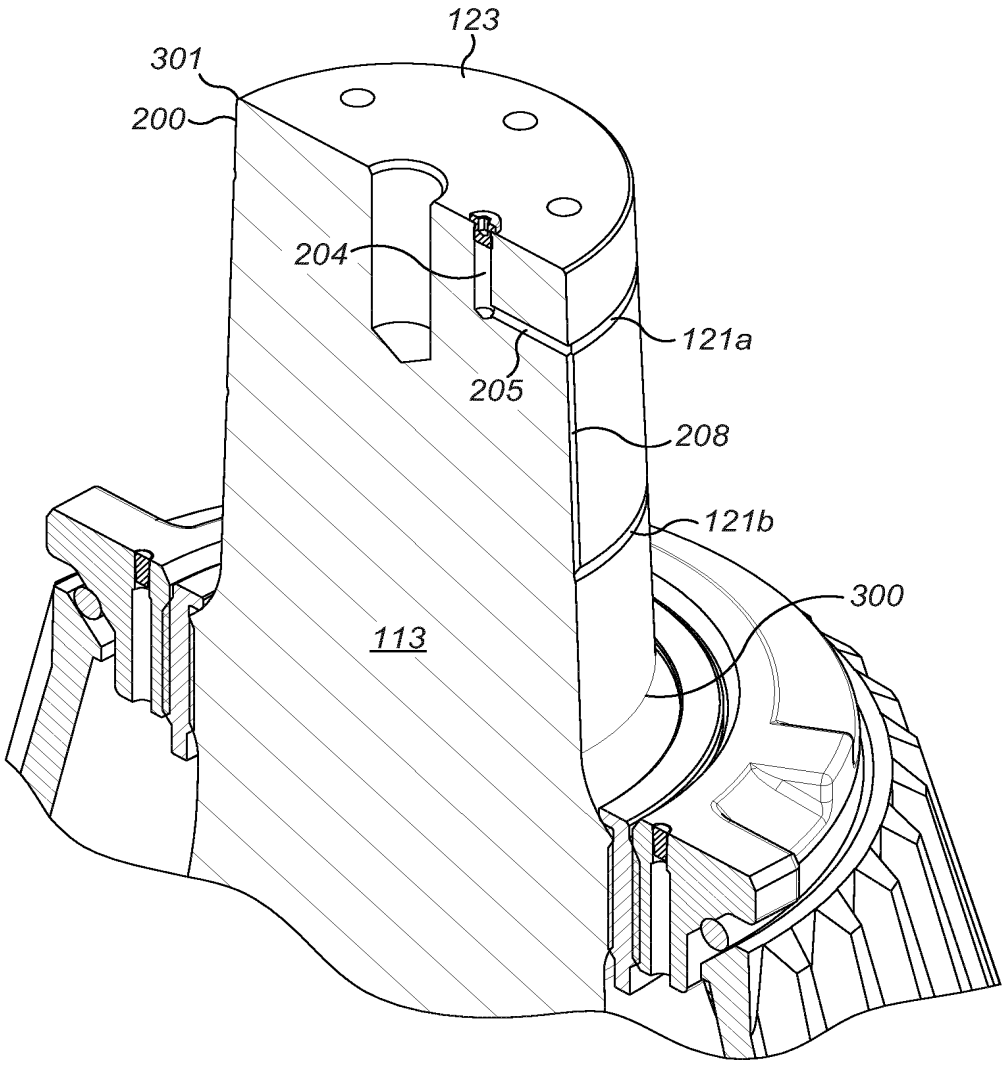

FIG. 3

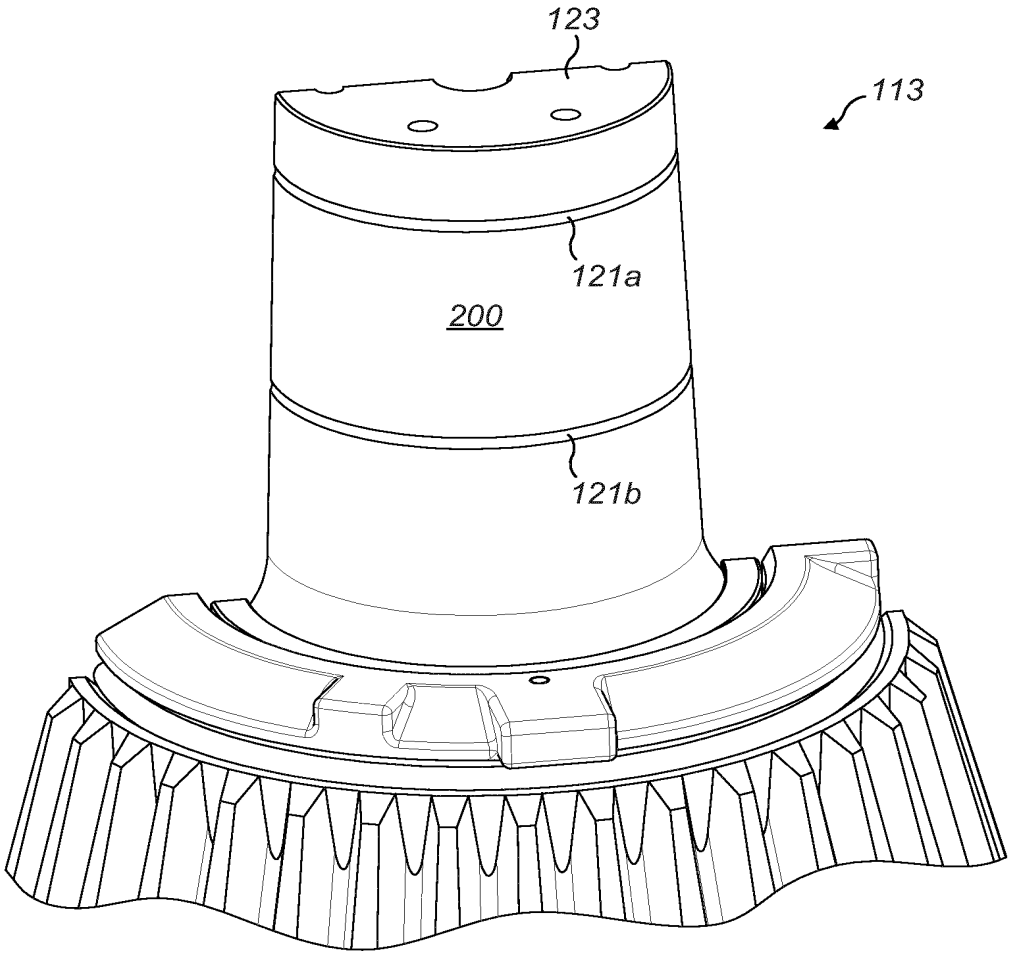

FIG. 4

WIPO
WORLD
INTELLECTUAL PROPERTY
ORGANIZATION

DOCUMENT MADE AVAILABLE UNDER THE PATENT COOPERATION TREATY (PCT)

International application number:		**PCT/EP2014/060594**
International filing date:		**23 May 2014 (23.05.2014)**
Document type:		**Certified copy of priority document**
Document details:	Country/Office:	**EP**
	Number:	**13192402.9**
	Filing date:	**12 November 2013 (12.11.2013)**
Date of receipt at the International Bureau:		**19 June 2014 (19.06.2014)**

Remark: Priority document submitted or transmitted to the International Bureau in compliance with Rule 17.1(a),(b) or (b-*bis*)

34, chemin des Colombettes
1211 Geneva 20, Switzerland
www.wipo.int

PCT REQUEST

Print Out (Original in Electronic Form)

0	**For receiving Office use only**	
0-1	International Application No.	**PCT/EP2014/060594**
0-2	International Filing Date	**23 MAY 2014 (23.05.2014)**
0-3	Name of receiving Office and "PCT International Application"	**RO/EP**

0-4	**Form PCT/RO/101 PCT Request**	
0-4-1	Prepared Using	PCT Online Filing Version 3.5.000.235 MT/FOP 20020701/0.20.5.20
0-5	**Petition** The undersigned requests that the present international application be processed according to the Patent Cooperation Treaty	
0-6	**Receiving Office (specified by the applicant)**	European Patent Office (EPO) (RO/EP)
0-7	**Applicant's or agent's file reference**	PE 14208WO
I	**Title of Invention**	Gyratory Crusher Main Shaft and Assembly
II	**Applicant**	
II-1	This person is	Applicant only
II-2	Applicant for	All designated States
II-4	Name	SANDVIK INTELLECTUAL PROPERTY AB
II-5	Address	. . SE-811 81 SANDVIKEN Sweden
II-6	State of nationality	SE
II-7	State of residence	SE
II-8	Telephone No.	+ 46 26 260000
II-9	Facsimile No.	+ 46 26 261089
III-1	**Applicant and/or inventor**	
III-1-1	This person is	Inventor only
III-1-3	Inventor for	
III-1-4	Name (LAST, First)	BERGMAN, Axel
III-1-5	Address	Falsterbogatan 20 214 36 Malmö Sweden

PCT REQUEST

Print Out (Original in Electronic Form)

III-2	**Applicant and/or inventor**	
III-2-1	This person is	Inventor only
III-2-3	Inventor for	
III-2-4	Name (LAST, First)	LARSSON, Mikael M
III-2-5	Address	Östarpsvägen 11 24133 Eslöv Sweden
III-3	**Applicant and/or inventor**	
III-3-1	This person is	Inventor only
III-3-3	Inventor for	
III-3-4	Name (LAST, First)	MALMQVIST, Patric
III-3-5	Address	Nilsåkessongatan 31 23333 Svedala Sweden
III-4	**Applicant and/or inventor**	
III-4-1	This person is	Inventor only
III-4-3	Inventor for	
III-4-4	Name (LAST, First)	HALLBERG, Anders
III-4-5	Address	Stubbvägen 28 247 33 Södra Sandby Sweden
III-5	**Applicant and/or inventor**	
III-5-1	This person is	Inventor only
III-5-3	Inventor for	
III-5-4	Name (LAST, First)	NILSSON, Matts-Åke
III-5-5	Address	Ninas väg 5 291 77 Gärds Köpinge Sweden
III-6	**Applicant and/or inventor**	
III-6-1	This person is	Inventor only
III-6-3	Inventor for	
III-6-4	Name (LAST, First)	ERIKSSON, Fredrik
III-6-5	Address	Grönegatan 34 21127 Malmö Sweden
III-7	**Applicant and/or inventor**	
III-7-1	This person is	Inventor only
III-7-3	Inventor for	
III-7-4	Name (LAST, First)	ERIKSSON, Bengt-Arne
III-7-5	Address	Sveagatan 4 233 33 Svedala Sweden

PCT REQUEST

Print Out (Original in Electronic Form)

III-8	**Applicant and/or inventor**	
III-8-1	This person is	Inventor only
III-8-3	Inventor for	
III-8-4	Name (LAST, First)	HOLOMBERG, Anne
III-8-5	Address	Bagerivägen 22 246 30 Löddeköpinge Sweden
IV-1	**Agent or common representative; or address for correspondence**	
	The person identified below is hereby/ has been appointed to act on behalf of the applicant(s) before the competent International Authorities as:	Agent
IV-1-1	Name (LAST, First)	HAMMARSJÖ, Joakim
IV-1-2	Address	. Sandvik Intellectual Property AB S-811 81 SANDVIKEN Sweden
IV-1-3	Telephone No.	+46 26 260975
IV-1-4	Facsimile No.	+46 26 261089
IV-1-5	e-mail	joakim.hammarsjo@sandvik.com
V	**DESIGNATIONS**	
V-1	**The filing of this request constitutes under Rule 4.9(a), the designation of all Contracting States bound by the PCT on the international filing date, for the grant of every kind of protection available and, where applicable, for the grant of both regional and national patents.**	
VI-1	**Priority claim of earlier regional application**	
VI-1-1	Filing date	12 November 2013 (12.11.2013)
VI-1-2	Number	13192402.9
VI-1-3	Regional Office	EP
VI-2	**Priority document request**	
	The receiving Office is requested to prepare and transmit to the International Bureau a certified copy of the earlier application(s) identified above as item(s):	VI-1

PCT REQUEST

Print Out (Original in Electronic Form)

VI-3	**Incorporation by reference :** where an element of the international application referred to in Article 11(1)(iii)(d) or (e) or a part of the description, claims or drawings referred to in Rule 20.5(a) is not otherwise contained in this international application but is completely contained in an earlier application whose priority is claimed on the date on which one or more elements referred to in Article 11(1)(iii) were first received by the receiving Office, that element or part is, subject to confirmation under Rule 20.6, incorporated by reference in this international application for the purposes of Rule 20.6.		
VII-1	**International Searching Authority Chosen**	European Patent Office (EPO) (ISA/EP)	
VIII	**Declarations**	Number of declarations	
VIII-1	Declaration as to the identity of the inventor	–	
VIII-2	Declaration as to the applicant's entitlement, as at the international filing date, to apply for and be granted a patent	1	
VIII-3	Declaration as to the applicant's entitlement, as at the international filing date, to claim the priority of the earlier application	–	
VIII-4	Declaration of inventorship (only for the purposes of the designation of the United States of America)	–	
VIII-5	Declaration as to non-prejudicial disclosures or exceptions to lack of novelty	–	

PCT REQUEST

Print Out (Original in Electronic Form)

VIII-2-1	**Declaration: Entitlement to apply for and be granted a patent** Declaration as to the applicant's entitlement, as at the international filing date, to apply for and be granted a patent (Rules 4.17(ii) and 51bis.1(a)(ii)), in a case where the declaration under Rule 4.17(iv) is not appropriate: Name (LAST, First)	In relation to this international application SANDVIK INTELLECTUAL PROPERTY AB is entitled to apply for and be granted a patent by virtue of the following:
VIII-2-1(iv)		an assignment from BERGMAN, Axel to SANDVIK INTELLECTUAL PROPERTY AB, dated 14 November 2013 (14.11.2013)
VIII-2-1(iv)		an assignment from LARSSON, Mikael M to SANDVIK INTELLECTUAL PROPERTY AB, dated 12 November 2013 (12.11.2013)
VIII-2-1(iv)		an assignment from MALMQVIST, Patric to SANDVIK INTELLECTUAL PROPERTY AB, dated 12 November 2013 (12.11.2013)
VIII-2-1(iv)		an assignment from HALLBERG, Anders to SANDVIK INTELLECTUAL PROPERTY AB, dated 12 November 2013 (12.11.2013)
VIII-2-1(iv)		an assignment from NILSSON, Matts-Åke to SANDVIK INTELLECTUAL PROPERTY AB, dated 12 November 2013 (12.11.2013)
VIII-2-1(iv)		an assignment from ERIKSSON, Fredrik to SANDVIK INTELLECTUAL PROPERTY AB, dated 13 November 2013 (13.11.2013)
VIII-2-1(iv)		an assignment from ERIKSSON, Bengt-Arne to SANDVIK INTELLECTUAL PROPERTY AB, dated 12 November 2013 (12.11.2013)
VIII-2-1(iv)		an assignment from HOLOMBERG, Anne to SANDVIK INTELLECTUAL PROPERTY AB, dated 12 November 2013 (12.11.2013)

PCT REQUEST

Print Out (Original in Electronic Form)

IX	Check list	Number of sheets	Electronic file(s) attached
IX-1	Request (including declaration sheets)	6	✓
IX-2	Description	10	✓
IX-3	Claims	3	✓
IX-4	Abstract	1	✓
IX-5	Drawings	4	✓
IX-7	TOTAL	24	
	Accompanying Items	Paper document(s) attached	Electronic file(s) attached
IX-8	Fee calculation sheet	–	✓
IX-18	PCT-SAFE physical media	–	–
IX-20	**Figure of the drawings which should accompany the abstract**	2	
IX-21	**Language of filing of the international application**	English	
X-1	**Signature of applicant, agent or common representative**	(PKCS7 Digital Signature)	
X-1-1	Name	SANDVIK INTELLECTUAL PROPERTY AB	
X-1-2	Name of signatory	SE, Sandvik Intellectual Property AB, P. Englén 31869	
X-1-3	Capacity (if such capacity is not obvious from reading the request)	(Applicant)	

FOR RECEIVING OFFICE USE ONLY

10-1	**Date of actual receipt of the purported international application**	**23 MAY 2014 (23.05.2014)**
10-2	**Drawings:**	
10-2-1	Received	X
10-2-2	Not received	
10-3	**Corrected date of actual receipt due to later but timely received papers or drawings completing the purported international application**	
10-4	**Date of timely receipt of the required corrections under PCT Article 11(2)**	
10-5	**International Searching Authority**	ISA/EP
10-6	**Transmittal of search copy delayed until search fee is paid**	

FOR INTERNATIONAL BUREAU USE ONLY

11-1	**Date of receipt of the record copy by the International Bureau**	

(12) INTERNATIONAL APPLICATION PUBLISHED UNDER THE PATENT COOPERATION TREATY (PCT)

(19) World Intellectual Property Organization
International Bureau

(43) International Publication Date
21 May 2015 (21.05.2015)

WIPO | PCT

(10) International Publication Number
WO 2015/070993 A1

(51) International Patent Classification:
B02C 2/06 (2006.01)

(21) International Application Number:
PCT/EP2014/060594

(22) International Filing Date:
23 May 2014 (23.05.2014)

(25) Filing Language: English

(26) Publication Language: English

(30) Priority Data:
13192402.9 12 November 2013 (12.11.2013) EP

(71) Applicant: **SANDVIK INTELLECTUAL PROPERTY AB** [SE/SE]; S-811 81 Sandviken (SE).

(72) Inventors: **BERGMAN, Axel**; Falsterbogatan 20, S-214 36 Malmö (SE). **LARSSON, Mikael M**; Östarpsvägen 11, S-24133 Eslöv (SE). **MALMQVIST, Patric**; Nilsåkessongatan 31, S-23333 Svedala (SE). **HALLBERG, Anders**; Stubbvägen 28, S-247 33 Södra Sandby (SE). **NILSSON, Matts-Åke**; Ninas väg 5, S-291 77 Gärds Köpinge (SE). **ERIKSSON, Fredrik**; Grönegatan 34, S-21127 Malmö (SE). **ERIKSSON, Bengt-Arne**; Sveagatan 4, S-233 33 Svedala (SE). **HOLOMBERG, Anne**; Bagerivägen 22, S-246 30 Löddeköpinge (SE).

(74) Agent: **HAMMARSJÖ, Joakim**; Sandvik Intellectual Property AB, S-811 81 Sandviken (SE).

(81) Designated States *(unless otherwise indicated, for every kind of national protection available)*: AE, AG, AL, AM, AO, AT, AU, AZ, BA, BB, BG, BH, BN, BR, BW, BY, BZ, CA, CH, CL, CN, CO, CR, CU, CZ, DE, DK, DM, DO, DZ, EC, EE, EG, ES, FI, GB, GD, GE, GH, GM, GT, HN, HR, HU, ID, IL, IN, IR, IS, JP, KE, KG, KN, KP, KR, KZ, LA, LC, LK, LR, LS, LT, LU, LY, MA, MD, ME, MG, MK, MN, MW, MX, MY, MZ, NA, NG, NI, NO, NZ, OM, PA, PE, PG, PH, PL, PT, QA, RO, RS, RU, RW, SA, SC, SD, SE, SG, SK, SL, SM, ST, SV, SY, TH, TJ, TM, TN, TR, TT, TZ, UA, UG, US, UZ, VC, VN, ZA, ZM, ZW.

(84) Designated States *(unless otherwise indicated, for every kind of regional protection available)*: ARIPO (BW, GH, GM, KE, LR, LS, MW, MZ, NA, RW, SD, SL, SZ, TZ, UG, ZM, ZW), Eurasian (AM, AZ, BY, KG, KZ, RU, TJ, TM), European (AL, AT, BE, BG, CH, CY, CZ, DE, DK, EE, ES, FI, FR, GB, GR, HR, HU, IE, IS, IT, LT, LU, LV,

[Continued on next page]

(54) Title: GYRATORY CRUSHER MAIN SHAFT AND ASSEMBLY

(57) Abstract: A gyratory crusher main shaft assembly in which an axially upper region (113) of the main shaft comprises a tapered conical section with a protective sleeve friction (124) fitted over the cone. To facilitate mounting and dismounting of the sleeve (124), at least one groove (121) is indented within a radially external facing surface of the main shaft at the region of the cone to allow fluid to be introduced under pressure to the region between the sleeve and the cone.

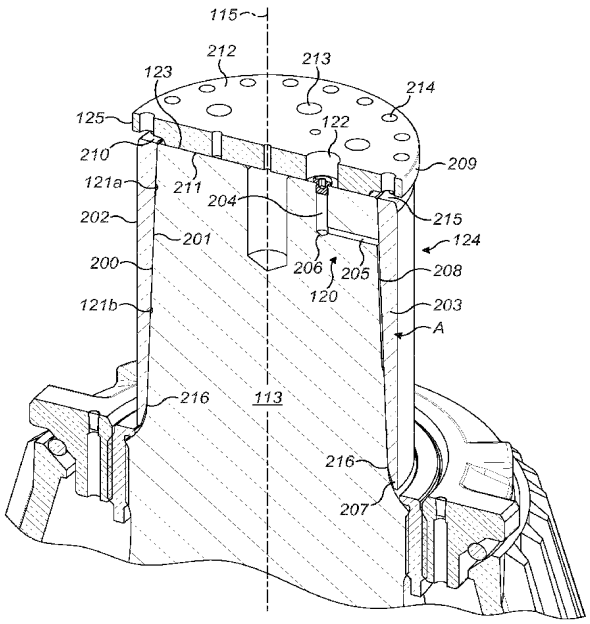

FIG. 2

WO 2015/070993 A1

MC, MK, MT, NL, NO, PL, PT, RO, RS, SE, SI, SK, SM, TR), OAPI (BF, BJ, CF, CG, CI, CM, GA, GN, GQ, GW, KM, ML, MR, NE, SN, TD, TG).

Declarations under Rule 4.17:

— *as to applicant's entitlement to apply for and be granted a patent (Rule 4.17(ii))*

Published:

— *with international search report (Art. 21(3))*

Gyratory Crusher Main Shaft and Assembly

Field of invention

The present invention relates to a gyratory crusher main shaft and main shaft assembly for positioning within a gyratory crusher and in particular, although not exclusively, to a main shaft having an axial upper end region that tapers radially inward and comprises at least one groove to receive a pressurised fluid to facilitate mounting and demounting of a sleeve at the shaft.

Background art

Gyratory crushers are used for crushing ore, mineral and rock material to smaller sizes. Typically, the crusher comprises a crushing head mounted upon an elongate main shaft. A first crushing shell is mounted on the crushing head and a second crushing shell is mounted on a frame such that the first and second crushing shells define together a crushing chamber through which the material to be crushed is passed.

The gyratory pendulum movement of the crushing head is supported by a lower bearing assembly positioned below the crushing head and a top bearing into which an upper end of the main shaft is journalled. Typically, the main shaft upper end is protected against wear by a sleeve. Commonly, the protective sleeve comprises a cylindrical geometry and is held at the main shaft via an interference or friction fit. Example protective sleeves are disclosed in US 1,402,255; US 1,592,313; US 1,748,102; RU 718160; US 4,027,825; RU 940837 and US 5,934,583.

However, a number of problems exist with conventional protective sleeves. In particular, if the time taken to friction fit the heated sleeve onto the main shaft end is too great it is not uncommon for the sleeve to cool and shrink before it is forced onto the shaft to the correct and final position. Additionally, disassembly is often problematic as the sleeve is required to be cut before it can be removed. On large crushers, protective sleeves have a substantial wall thickness and this cutting operation can be time and labour intensive with the added risk of potential damage to the shaft. Conventional mounting and dismounting procedures, due to the design of the main shaft and sleeve, are therefore disadvantageous in that they pose a risk of damage to the main shaft (and other components), injury to personnel and unacceptably long downtime of the crusher during repair and maintenance. Accordingly, what is required is a main shaft and main shaft assembly having a sleeve that addresses the above problems.

Summary of the Invention

It is an objective of the present invention to provide a gyratory crusher main shaft and a main shaft assembly (having a sleeve) that enables convenient mounting and dismounting of the protective sleeve at the upper end of the shaft that obviates a requirement for excessive heating of the main shaft and the use of grinding and cutting apparatus that otherwise carries a risk of damage to the main shaft and injury to service personnel.

It is a further specific objective of the present invention to provide a main shaft and sleeve assembly that facilitates mounting and dismounting of the sleeve at the shaft via control of

a pressurised fluid delivered to the region of an axially upper end of the shaft radially between the shaft and the sleeve.

The objectives are achieved by providing a main shaft comprising at least one groove or channel indented on an outward facing external surface of the shaft. The groove is configured and dimensioned to receive a fluid under pressure to force separation of the sleeve from the main shaft. Providing the groove at the main shaft as opposed to the sleeve, is advantageous to maintain the strength and integrity of the sleeve to avoid fracture or splitting in response to the introduction of the pressurised fluid radially between the main shaft and the sleeve. The present invention is advantageous to allow the fluid to be introduced into the region between the main shaft and the sleeve via different routing options including in particular i) a conduit extending axially and/or radially at and/or within the main shaft and ii) a supply conduit extending through the sleeve wall. Reference to the conduit extending axially encompasses the conduit being aligned transverse or parallel to the longitudinal axis of the main shaft.

As will be appreciated, the subject invention is compatible for use with existing fluid supply arrangements including conduits, pumps, fluid reservoirs, seals, gaskets etc.

According to a specific aspect of the present invention there is provided a gyratory crusher main shaft comprising: a shaft body having a radially outward facing external surface and having a first end for positioning at a lower region of the crusher and a second end for positioning at an upper region of the crusher relative to the first end; an axial region of the shaft body extending from the second end is tapered relative to a longitudinal axis of the shaft body such that a cross sectional area of the shaft body at the tapered region decreases in a direction from the first end to the second end, the tapered region configured to mount a shaft sleeve; characterised by: at least one groove indented at the external surface and positioned at the tapered region and capable of receiving a pressurised fluid to facilitate mounting and dismounting of the sleeve at the shaft body.

The subject invention provides for the convenient and efficient mounting and dismounting of the sleeve at the main shaft by virtue of the combination of the fluid filled grooves or

channels, at the external surface of the main shaft and the radially tapered end section of the main shaft onto which the sleeve is mounted. Without this radially tapered upper end section, the sleeve would still require significant manual intervention to provide axial movement over the surface of the shaft. The conical profiled and grooved main shaft section in combination with a corresponding tapered sleeve is therefore advantageous to firstly allow the fluid to be introduced and then to greatly facilitate and provide immediate axial movement of the sleeve relative to the main shaft.

Preferably, the main shaft further comprises a fluid inlet conduit extending axially from the second end and provided in fluid communication with the groove to allow a fluid to be supplied to the groove from the second end. Positioning the inlet conduit internally at the main shaft is advantageous to avoid routing the fluid through the sleeve which would otherwise require modification and a potential weakening of the sleeve and in particular the sleeve wall. Preferably, the conduit extends internally within the shaft body such that a part of the conduit extends radially outward to the groove. Optionally, at least a part of the conduit is indented and extends axially at the external surface as a channel. The channel may preferably extend axially at the external surface between a plurality of grooves to couple the grooves in fluid communication. Such an arrangement is advantageous to reduce the axial length of any internal bore through the main shaft. Minimising an axial length of an internally extending fluid supply conduit is advantageous during manufacture as the use of very long and thin drills should be avoided. A channel or groove indented on the external surface of the main shaft is therefore more convenient and efficient for manufacture.

Preferably, the groove extends in a circumferential direction around the shaft body. More preferably, the groove extends substantially completely circumferentially around the shaft body. The circumferentially extending groove is advantageous to provide a supply of fluid in a circumferential direction between the main shaft and the sleeve to ensure a uniform expansion pressure and lubrication during dismounting and mounting. Accordingly, '*dry*' regions that could otherwise lead to '*sticking*' or '*freezing*' are avoided.

Preferably, the main shaft comprises a plurality of grooves at the external surface. This configuration provides that the fluid is supplied to different axial regions between the main shaft and sleeve to facilitate uniform delivery and dispersion of the fluid between the respective contact surfaces. Optionally, the main shaft comprises a first groove extending in a circumferential direction around the shaft body and second groove extending in a circumferential direction around the shaft body, the first groove separated axially from the second groove and coupled in fluid communication, optionally via one or more axially extending channels. Preferably, the first groove and the second groove are separated axially by an equal distance from a cross sectional area centre of the sleeve. Accordingly, the expansion force imparted to the sleeve is distributed uniformly along the axial length of the sleeve to both facilitate mounting and dismounting and avoid fracture or distortion of the sleeve. Reference to the '*cross sectional centre*' refers to the cross section through the sleeve in an axial plane extending parallel to the longitudinal axis of the sleeve (and the main shaft). As the sleeve comprises a wall that is tapered according to a conical configuration, the cross sectional centre is positioned closer to the upper axial end of the sleeve having the thicker wall thickness relative to the alternate lower axial end.

According to a second aspect of the present invention there is provided a gyratory crusher main shaft assembly comprising: a shaft body as claimed herein; a sleeve fitted over the tapered region, the sleeve having a tapered wall thickness such that a wall thickness at a second upper end of the sleeve is greater than a wall thickness at a first lower end of the sleeve.

Preferably, the assembly further comprises an end retainer releasably mounted at the second end of a shaft body and having a perimeter region extending radially outward beyond the external surface at the tapered region, the perimeter region positioned to radially overlap the sleeve at the second end of the sleeve to inhibit axial separation of the sleeve from the shaft body. Preferably, the retainer is releasably attached to the shaft during mounting and dismounting procedures via a plurality of attachment elements and in particular bolts or screws.

Preferably, the retainer comprises a disc-like configuration having a recess extending circumferentially at the perimeter region to allow axial movement of the sleeve into the recess. Such an arrangement is advantageous to allow a controlled axial movement of the sleeve during dismounting in response to introduction of the pressurised fluid but to inhibit complete axial separation of the sleeve from the main shaft by abutment with the retainer. Naturally, the sleeve may be removed once the retainer has been removed from the main shaft end. The retainer is also configured to force the sleeve over and about the main shaft by axial advancement of suitable attachment bolts, screws and the like.

Preferably, the assembly further comprises a fluid inlet conduit extending axially from the second end of the shaft body in fluid communication with the groove to allow a fluid to be supplied to the groove from the second end.

According to a specific embodiment, the assembly may optionally comprise a fluid inlet conduit extending radially through the wall of the sleeve in fluid communication with the groove to allow a fluid to be supplied to the groove through the sleeve.

According to a third aspect of the present invention there is provided a gyratory crusher comprising a main shaft or main shaft assembly as claimed herein.

Brief description of drawings

A specific implementation of the present invention will now be described, by way of example only, and with reference to the accompanying drawings in which:

Figure 1 is a cross sectional side view of a gyratory crusher having a main shaft supported at its upper end by a top bearing assembly and having a protective sleeve mounted about the upper end of the main shaft according to a specific implementation of the present invention;

Figure 2 is a perspective partial cross section through the upper end of the main shaft and sleeve assembly;

Figure 3 is a perspective partial cross section of the shaft upper end of figure 2 with the protective sleeve removed;

Figure 4 is a further external perspective view of the tapered axial section of the main shaft upper end of figure 3.

Detailed description of preferred embodiment of the invention

Referring to figure 1, a crusher comprises a frame 100 having an upper frame 101 and a lower frame 102. A crushing head 103 is mounted upon an elongate shaft 107 having a longitudinal axis 115. A first (inner) crushing shell 105 is fixably mounted on crushing head 103 and a second (outer) crushing shell 106 is fixably mounted at upper frame 101. A crushing zone 104 is formed between the opposed crushing shells 105, 106. A discharge zone 109 is positioned immediately below crushing zone 104 and is defined, in part, by lower frame 102.

A drive (not shown) is coupled to main shaft 107 via a drive shaft 108 and suitable gearing 116 so as to rotate shaft 107 eccentrically about a longitudinal axis 126 of the crusher and to cause head 103 to perform a gyratory pendulum movement and crush material introduced into crushing chamber 104. A first (axial upper) end region 113 of shaft 107 is maintained in a rotatable position by a top-end bearing assembly 112 positioned intermediate between main shaft 107 and a central boss 117. Similarly, a second (axial bottom) end 118 of shaft 107 is supported by a bottom-end bearing assembly 119. Upper frame 101 is divided into an upper frame part (commonly termed a topshell 111) mounted upon lower frame part 102 (commonly termed a bottom shell), and a spider assembly 114 having arms 110 that extend from topshell 111 and represents an upper portion of the crusher.

Upper end region 113 comprises a radial taper that defines an upper conical region of main shaft 107. The conical region 113 is tapered so as to decrease in cross sectional area in a direction from shaft second (lower) end 118 to an upper end surface 123 positioned

uppermost within the crusher. To avoid excessive wear of the conical region 113, by contact with bearing assembly 112, a substantially cylindrical wear sleeve 124 is mounted over and about region 113. Sleeve 124 is held in position at region 113 by an interference or friction fit and is provided in close touching contact over an axial length of both sleeve 124 and region 113. Accordingly, sleeve 124 is positioned radially intermediate bearing assembly 112 and an outer surface of region 113 to absorb the radial and axial loading forces resultant from the crushing action of the gyratory pendulum movement.

To facilitate mounting and dismounting of sleeve 124 at shaft region 113, shaft 107 is configured to enable a fluid to be introduced into the contact region between the sleeve 124 and shaft region 113. In particular, a fluid supply conduit 120 extends axially and radially along shaft 107 (within region 113) from end surface 123 to the contact region between sleeve 124 and region 113. A channel (alternatively termed a groove) 121 is indented within the external facing surface of shaft 107 at region 113 and is provided in fluid communication with conduit 120.

Referring to figures 2 to 4 tapered region 113 comprises a lowermost end 300 and an uppermost end 301. The radial taper is uniform along the axial length between ends 300, 301 such that a cross sectional area decreases from lower end 300 to upper end 301 at a uniform rate to define a frusto-conical region (113) of main shaft 107. Sleeve 124 comprises a first (lower) end 216 for mating at the end 300 of region 113 and a second (upper) end 215 for positioning at uppermost end 301 substantially coplanar with shaft end surface 123. Sleeve 124 comprises a radially inward facing surface 201 and a radially outward facing surface 202 with a substantially cylindrical wall 203 defined between surfaces 201, 202. Wall 203 is tapered so as to decrease in radial thickness from uppermost end 215 to lowermost end 216. In particular, external surface 202 is substantially cylindrical whilst internal surface 201 comprises a conical shape profile corresponding to the conical shape profile of main shaft region 113. Region A, illustrated in figure 2, corresponds to a mid-axial length position as defined by the cross sectional area of wall 203 (in a plane extending along axis 115) such that the cross sectional area axially above region A is equal to the cross sectional area axially below region A. Sleeve 124 and in particular radially inward facing surface 201 is mated in close fitting contact with the

external facing surface 200 of main shaft region 113 between respective lower (216, 300) and upper (215, 301) ends.

Sleeve lower end 216 comprises a chamfer region 207 of decreasing wall thickness such that very a lowermost end region of sleeve 124 is chamfered to sit close to a radius section of main shaft region 113 below region end 300.

A disc-like retainer 125 is releasably mounted over shaft end surface 123 during mounting and dismounting of sleeve 124 at main shaft region 113. Retainer 125 comprises a suitable bore 122 aligned coaxially with an end region of conduit 120 to allow fluid to be introduced through retainer 125 to groove 121 via conduit 120. Retaining disc 125 comprises a plurality of perimeter bores 214 distributed circumferentially around retainer 125 immediately inside of a perimeter 209. Bores 214 are configured to receive attachment bolts (not shown) received within corresponding bores (not shown) extending axially from sleeve upper end 215 so as to lock retainer 125 to sleeve 124 during mounting and dismounting procedures. Retainer 125 further comprises a plurality of additional bores 213 positioned radially inside perimeter bores 214 that are configured to receive attachment bolts (not shown) to secure retainer 125 to main shaft region 113. In particular, an underside surface 211 of retainer 125 is positioned in contact and aligned substantially coplanar with the shaft end surface 123. In this orientation, an upward facing retainer surface 212 is orientated away from main shaft 107. An annular recess 210 extends circumferentially around retainer perimeter 209 and is indented in surface 211 so as to create a small axially and radially extending annular gap region immediately axially above the annular sleeve end 215.

Accordingly, during a sleeve dismounting operation, the sleeve attachment bolts (not shown) are removed. Sleeve 124 is capable of sliding axially into the gap region defined by recess 210 to contact the underside surface 211 (at the recess 210) when fluid pressure is applied. In an alternative mounting operation, retainer 125 is inverted such that disc surface 212 is mated against sleeve end 215 and main shaft end surface 123 to force sleeve 124 axially over and about region 113 as the attachment bolts (not shown) are tightened.

Fluid supply conduit 120 comprises an axial section 204 extending downwardly from end surface 123. A lowermost end 206 of axial section 204 is terminated by a radially extending section 205 that terminates at shaft external facing surface 200. A radially outermost end of the conduit section 205 is provided in fluid communication with an axially upper groove 121a that extends circumferentially around shaft region 113.

According to the specific implementation, conical region 113 further comprises a second circumferentially extending groove 121b axially separated from the first upper groove 121a by a distance approximately half the axial length of region 113 and sleeve 124. Additionally, each groove 121a, 121b is spaced axially from region A by an equal axial distance. Grooves 121a and 121b also extend the full 360° circumference of shaft surface 200. An interconnecting fluid flow channel 208 extends axially from upper groove 121a to lower groove 121b to provide fluid communication between the two grooves 121a, 121b.

According to further specific implementations, region 113 may comprise a plurality of interconnecting fluid flow channels 208 distributed circumferentially around surface 200. According to yet further embodiments, region 113 may comprise a single circumferentially extending groove optionally in the form of at least one spiral or helix. According to a further embodiment, external facing surface 200 may comprise a network of grooves orientated and extending axially parallel or transverse to axis 115 and/or in a circumferential direction entirely or partly around the conical surface 200.

The subject invention is compatible for use with conventional fluid supply systems (comprising reservoirs, pumps, conduits, seals etc.) coupled to bore 122 via suitable enclosures or conduits. Accordingly, a fluid is capable of being delivered to grooves 121a, 121b via supply conduits 120, 208 to lubricate the interface between shaft surface 200 and sleeve surface 201. Such an arrangement facilitates both a slide mounting of sleeve 124 and imparts a radial expansion force (to sleeve 124) to promote sleeve demounting.

According to further specific embodiments, shaft region 113 may be devoid of conduit 120 such that sleeve 124 comprises a conduit bore extending through sleeve wall 203 in fluid communication with grooves 121a, 121b and/or channel 208.

Claims

1. A gyratory crusher main shaft (107) comprising:

a shaft body having a radially outward facing external surface (200) and having a first end (118) for positioning at a lower region of the crusher and a second end (123) for positioning at an upper region of the crusher relative to the first end (118);

an axial region (113) of the shaft body extending from the second end (123) is tapered relative to a longitudinal axis (115) of the shaft body such that a cross sectional area of the shaft body at the tapered region (113) decreases in a direction from the first end (118) to the second end (123), the tapered region (113) configured to mount a shaft sleeve (124);

characterised by:

at least one groove (121) indented at the external surface (200) and positioned at the tapered region (113) and capable of receiving a pressurised fluid to facilitate mounting and dismounting of the sleeve (124) at the shaft body.

2. The main shaft as claimed in claim 1 further comprising a fluid inlet conduit (120) extending axially from the second end (123) and provided in fluid communication with the groove (121) to allow a fluid to be supplied to the groove (121) from the second end (123).

3. The main shaft as claimed in claim 2 wherein the conduit (120) extends internally within the shaft body such that a part (205) of the conduit (120) extends radially outward to the groove (121).

4. The main shaft as claimed in claim 3 wherein the groove (121) extends in a circumferential direction around the shaft body.

5. The main shaft as claimed in claim 4 wherein the groove (121) extends substantially completely circumferentially around the shaft body.

6. The main shaft as claimed in claim 5 comprising a plurality of grooves (121a, 121b) at the external surface (200).

7. The apparatus as claimed in claim 6 comprising a first groove (121a) extending in a circumferential direction around the shaft body and second groove (121b) extending in a circumferential direction around the shaft body, the first groove (121a) separated axially from the second groove (121b) and coupled in fluid communication.

8. The main shaft as claimed in claim 7 wherein at least a part of the conduit (120) is indented and extends axially at the external surface (200) as a channel (208) to couple the first (121a) and second (121b) grooves in fluid communication.

9. A gyratory crusher main shaft assembly comprising:

a shaft body as claimed in any preceding claim;

a sleeve (124) fitted over the tapered region (113), the sleeve (124) having a tapered wall thickness such that a wall thickness at a second upper end (215) of the sleeve (124) is greater than a wall thickness at a first lower end (216) of the sleeve(124).

10. The assembly as claimed in claim 9 further comprising an end retainer (125) releasably mounted at the second end (123) of a shaft body and having a perimeter region (209) extending radially outward beyond the external surface (200) at the tapered region (113), the perimeter region (209) positioned to radially overlap the sleeve (124) at the second end (215) of the sleeve (124) to inhibit axial separation of the sleeve (124) from the shaft body.

11. The assembly as claimed in claim 10 wherein the retainer (125) comprises a disc-like configuration having a recess (210) extending circumferentially at the perimeter region (209) to allow axial movement of the sleeve (124) into the recess (210).

12. The assembly as claimed in any one of claims 9 to 11 further comprising a fluid inlet conduit (120) extending axially from the second end (123) of the shaft body in fluid communication with the groove (121) to allow a fluid to be supplied to the groove (121) from the second end (123).

13. The assembly as claimed in any one of claims 9 to 11 further comprising a fluid inlet conduit extending radially through the wall (203) of the sleeve (124) in fluid communication with the groove (121) to allow a fluid to be supplied to the groove (121) through the sleeve (124).

5

14. A gyratory crusher comprising a main shaft or main shaft assembly as claimed in any preceding claim.

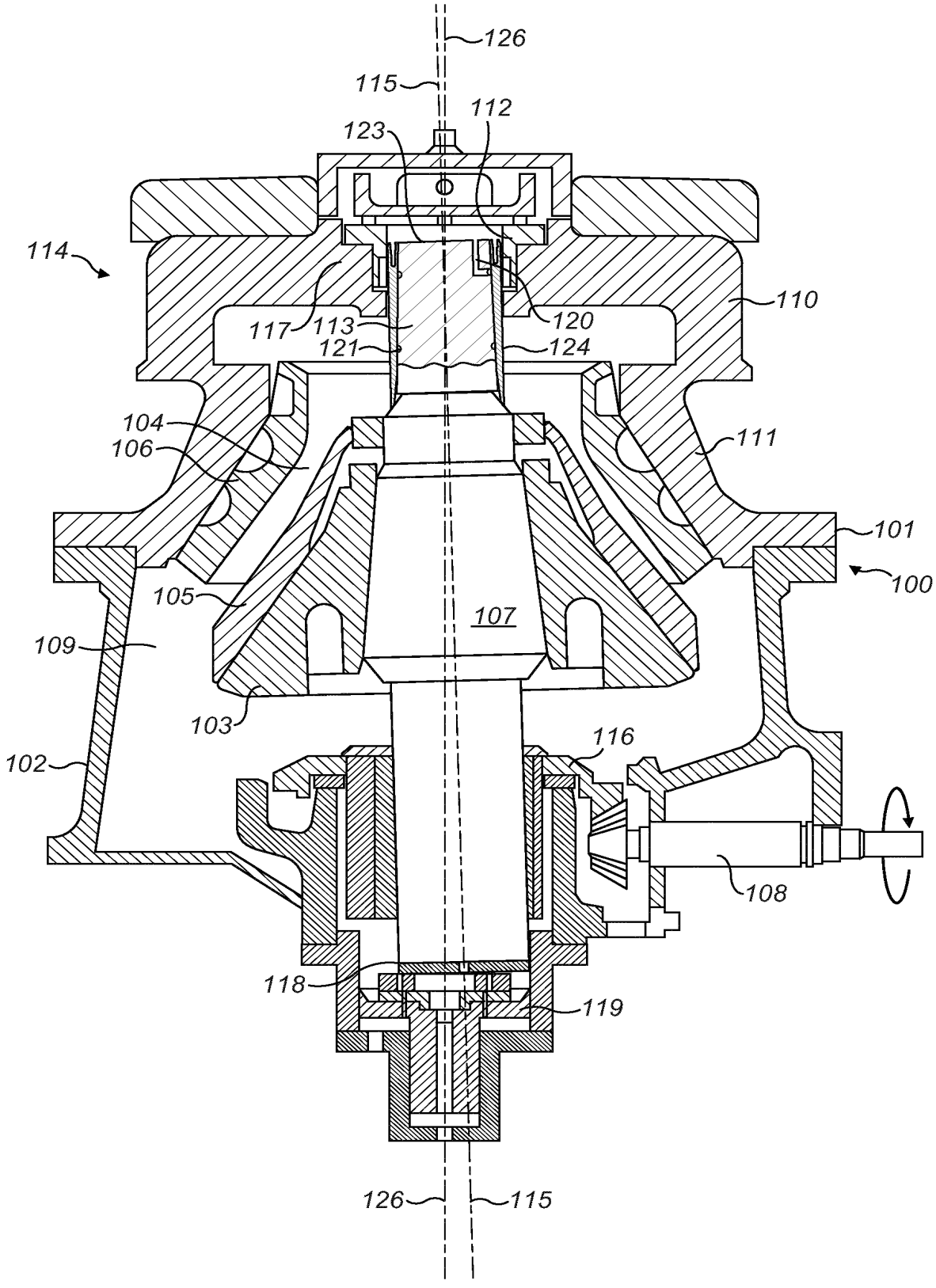
126
115
112
123
114
110
117
113
120
121
124
104
106
111
101
100
105
107
109
103
116
102
108
118
119
126
115

FIG. 1

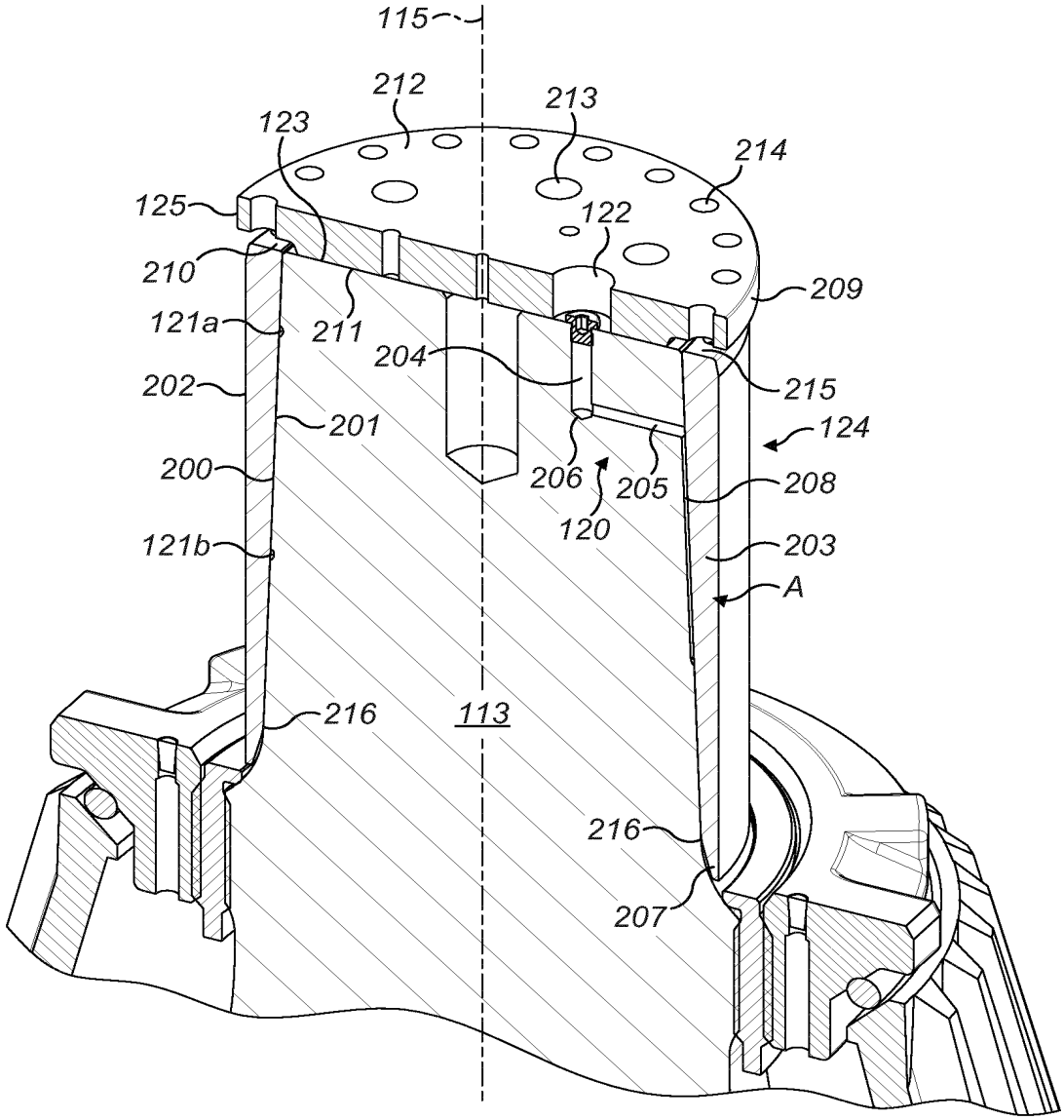
115
212
213
123
214
125
122
210
209
121a
211
204
202
215
201
124
200
206
205
208
120
121b
203
A
216
113
216
207

FIG. 2

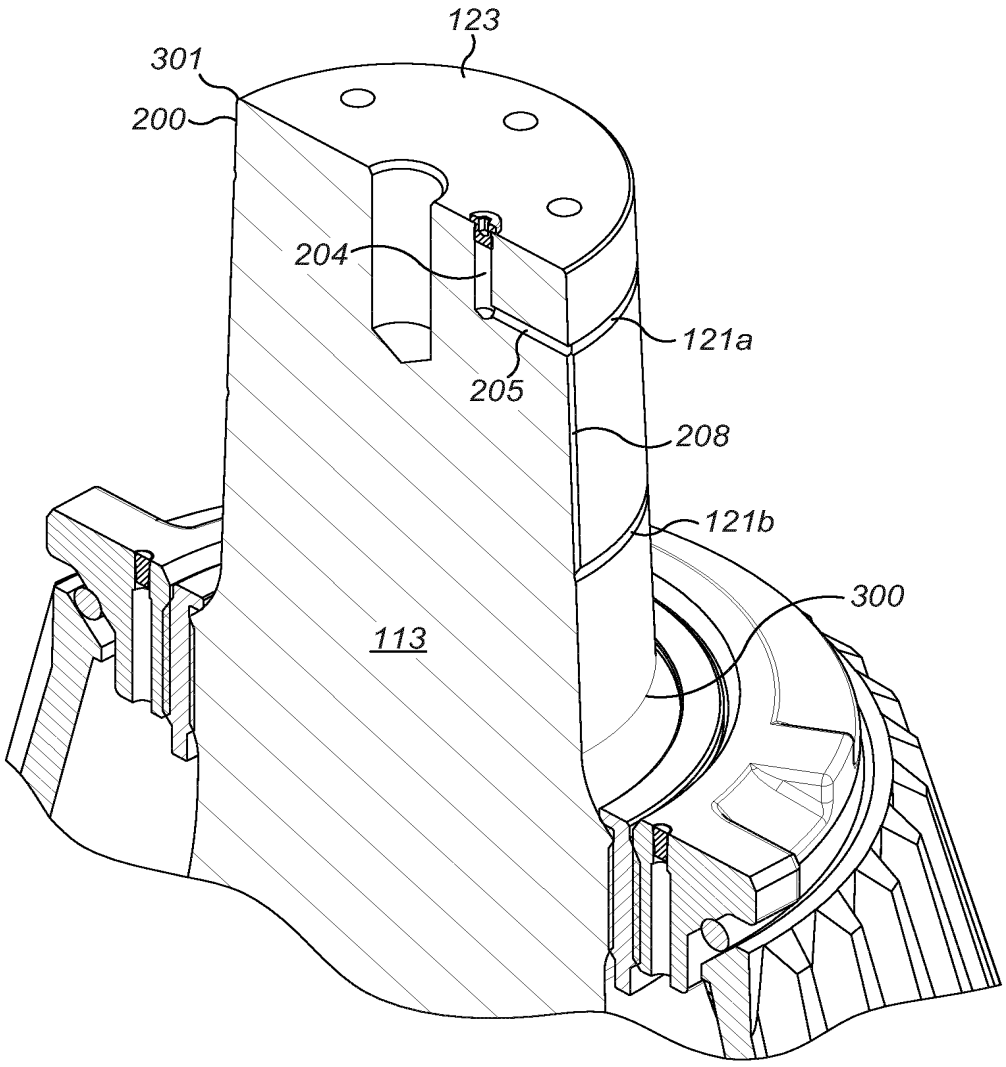

FIG. 3

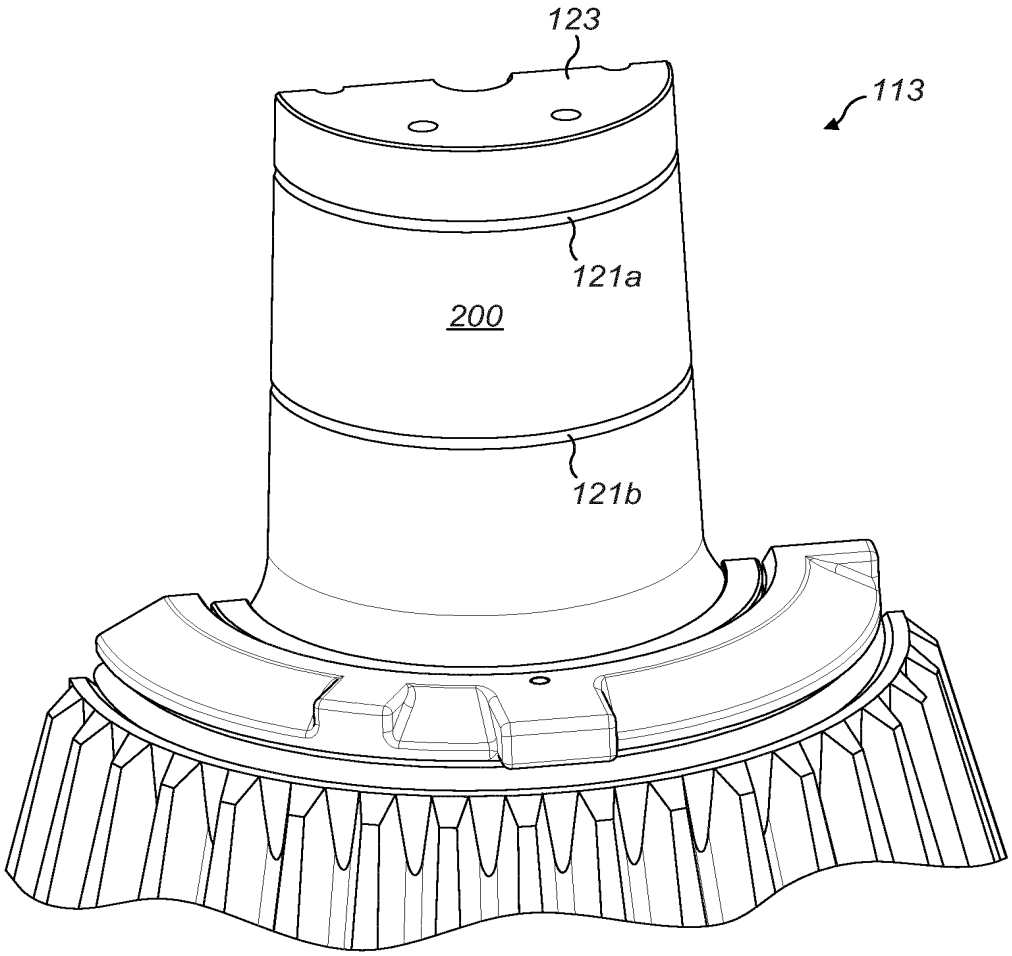

FIG. 4

PTO/SB/06 (09-11)
Approved for use through 1/31/2014. OMB 0651-0032
U.S. Patent and Trademark Office; U.S. DEPARTMENT OF COMMERCE
Under the Paperwork Reduction Act of 1995, no persons are required to respond to a collection of information unless it displays a valid OMB control number.

PATENT APPLICATION FEE DETERMINATION RECORD

Substitute for Form PTO-875

Application or Docket Number	Filing Date	☐ To be Mailed
15/035,774	05/11/2016	

ENTITY: ☒ LARGE ☐ SMALL ☐ MICRO

APPLICATION AS FILED – PART I

FOR	(Column 1) NUMBER FILED	(Column 2) NUMBER EXTRA	RATE ($)	FEE ($)
☐ BASIC FEE (37 CFR 1.16(a), (b), or (c))	N/A	N/A	N/A	
☐ SEARCH FEE (37 CFR 1.16(k), (i), or (m))	N/A	N/A	N/A	
☐ EXAMINATION FEE (37 CFR 1.16(o), (p), or (q))	N/A	N/A	N/A	
TOTAL CLAIMS (37 CFR 1.16(i))	minus 20 =	*	X $ =	
INDEPENDENT CLAIMS (37 CFR 1.16(h))	minus 3 =	*	X $ =	
☐ APPLICATION SIZE FEE (37 CFR 1.16(s))	If the specification and drawings exceed 100 sheets of paper, the application size fee due is $310 ($155 for small entity) for each additional 50 sheets or fraction thereof. See 35 U.S.C. 41(a)(1)(G) and 37 CFR 1.16(s).			
☐ MULTIPLE DEPENDENT CLAIM PRESENT (37 CFR 1.16(j))				
* If the difference in column 1 is less than zero, enter "0" in column 2.			TOTAL	

APPLICATION AS AMENDED – PART II

AMENDMENT **05/11/2016**

	(Column 1) CLAIMS REMAINING AFTER AMENDMENT		(Column 2) HIGHEST NUMBER PREVIOUSLY PAID FOR	(Column 3) PRESENT EXTRA	RATE ($)	ADDITIONAL FEE ($)
Total (37 CFR 1.16(i))	* 14	Minus	** 20	= 0	X $80 =	0
Independent (37 CFR 1.16(h))	* 3	Minus	***3	= 0	X $420 =	0
☐ Application Size Fee (37 CFR 1.16(s))						
☐ FIRST PRESENTATION OF MULTIPLE DEPENDENT CLAIM (37 CFR 1.16(j))						
					TOTAL ADD'L FEE	0

AMENDMENT

	(Column 1) CLAIMS REMAINING AFTER AMENDMENT		(Column 2) HIGHEST NUMBER PREVIOUSLY PAID FOR	(Column 3) PRESENT EXTRA	RATE ($)	ADDITIONAL FEE ($)
Total (37 CFR 1.16(i))	*	Minus	**	=	X $ =	
Independent (37 CFR 1.16(h))	*	Minus	***	=	X $ =	
☐ Application Size Fee (37 CFR 1.16(s))						
☐ FIRST PRESENTATION OF MULTIPLE DEPENDENT CLAIM (37 CFR 1.16(j))						
					TOTAL ADD'L FEE	

* If the entry in column 1 is less than the entry in column 2, write "0" in column 3.

** If the "Highest Number Previously Paid For" IN THIS SPACE is less than 20, enter "20".

*** If the "Highest Number Previously Paid For" IN THIS SPACE is less than 3, enter "3".

The "Highest Number Previously Paid For" (Total or Independent) is the highest number found in the appropriate box in column 1.

LIE
KIM DOWNING

This collection of information is required by 37 CFR 1.16. The information is required to obtain or retain a benefit by the public which is to file (and by the USPTO to process) an application. Confidentiality is governed by 35 U.S.C. 122 and 37 CFR 1.14. This collection is estimated to take 12 minutes to complete, including gathering, preparing, and submitting the completed application form to the USPTO. Time will vary depending upon the individual case. Any comments on the amount of time you require to complete this form and/or suggestions for reducing this burden, should be sent to the Chief Information Officer, U.S. Patent and Trademark Office, U.S. Department of Commerce, P.O. Box 1450, Alexandria, VA 22313-1450. DO NOT SEND FEES OR COMPLETED FORMS TO THIS ADDRESS. **SEND TO: Commissioner for Patents, P.O. Box 1450, Alexandria, VA 22313-1450.**

If you need assistance in completing the form, call 1-800-PTO-9199 and select option 2.

UNITED STATES PATENT AND TRADEMARK OFFICE

UNITED STATES DEPARTMENT OF COMMERCE
United States Patent and Trademark Office
Address: COMMISSIONER FOR PATENTS
P.O. Box 1450
Alexandria, Virginia 22313-1450
www.uspto.gov

APPLICATION NUMBER	FILING or 371(c) DATE	GRP ART UNIT	FIL FEE REC'D	ATTY.DOCKET.NO	TOT CLAIMS	IND CLAIMS
15/035,774	05/11/2016		1480	SC 14208WOUS	14	1

CONFIRMATION NO. 3999

78686
Sandvik/Diamond Innovations
6325 Huntley Road
Worthington, OH 43085

FILING RECEIPT

OC000000083397799

Date Mailed: 06/14/2016

Receipt is acknowledged of this non-provisional patent application. The application will be taken up for examination in due course. Applicant will be notified as to the results of the examination. Any correspondence concerning the application must include the following identification information: the U.S. APPLICATION NUMBER, FILING DATE, NAME OF APPLICANT, and TITLE OF INVENTION. Fees transmitted by check or draft are subject to collection. Please verify the accuracy of the data presented on this receipt. **If an error is noted on this Filing Receipt, please submit a written request for a Filing Receipt Correction. Please provide a copy of this Filing Receipt with the changes noted thereon. If you received a "Notice to File Missing Parts" for this application, please submit any corrections to this Filing Receipt with your reply to the Notice. When the USPTO processes the reply to the Notice, the USPTO will generate another Filing Receipt incorporating the requested corrections**

Inventor(s)

Axel BERGMAN, Malmo, SWEDEN;
Mikael M LARSSON, Eslov, SWEDEN;
Patric MALMQVIST, Svedala, SWEDEN;
Anders HALLBERG, Sodra Sandby, SWEDEN;
Matts-Ake NILSSON, Gards Kopinge, SWEDEN;
Fredrik ERIKSSON, Malmo, SWEDEN;
Bengt-Arne ERIKSSON, Svedala, SWEDEN;
Anne HOLOMBERG, Loddekopinge, SWEDEN;

Applicant(s)

SANDVIK INTELECTUAL PROPERTY AB, Sandviken, SWEDEN;

Power of Attorney: None

Domestic Priority data as claimed by applicant

This application is a 371 of PCT/EP2014/060594 05/23/2014

Foreign Applications (You may be eligible to benefit from the **Patent Prosecution Highway** program at the USPTO. Please see http://www.uspto.gov for more information.)
EUROPEAN PATENT OFFICE (EPO) 13192402.9 11/12/2013

Permission to Access Application via Priority Document Exchange: Yes

Permission to Access Search Results: No

Applicant may provide or rescind an authorization for access using Form PTO/SB/39 or Form PTO/SB/69 as appropriate.

If Required, Foreign Filing License Granted: 06/11/2016
The country code and number of your priority application, to be used for filing abroad under the Paris Convention, is **US 15/035,774**
Projected Publication Date: 09/22/2016
Non-Publication Request: No
Early Publication Request: No
Title

GYRATORY CRUSHER MAIN SHAFT AND ASSEMBLY

Preliminary Class

Statement under 37 CFR 1.55 or 1.78 for AIA (First Inventor to File) Transition Applications: No

PROTECTING YOUR INVENTION OUTSIDE THE UNITED STATES

Since the rights granted by a U.S. patent extend only throughout the territory of the United States and have no effect in a foreign country, an inventor who wishes patent protection in another country must apply for a patent in a specific country or in regional patent offices. Applicants may wish to consider the filing of an international application under the Patent Cooperation Treaty (PCT). An international (PCT) application generally has the same effect as a regular national patent application in each PCT-member country. The PCT process **simplifies** the filing of patent applications on the same invention in member countries, but **does not result** in a grant of "an international patent" and does not eliminate the need of applicants to file additional documents and fees in countries where patent protection is desired.

Almost every country has its own patent law, and a person desiring a patent in a particular country must make an application for patent in that country in accordance with its particular laws. Since the laws of many countries differ in various respects from the patent law of the United States, applicants are advised to seek guidance from specific foreign countries to ensure that patent rights are not lost prematurely.

Applicants also are advised that in the case of inventions made in the United States, the Director of the USPTO must issue a license before applicants can apply for a patent in a foreign country. The filing of a U.S. patent application serves as a request for a foreign filing license. The application's filing receipt contains further information and guidance as to the status of applicant's license for foreign filing.

Applicants may wish to consult the USPTO booklet, "General Information Concerning Patents" (specifically, the section entitled "Treaties and Foreign Patents") for more information on timeframes and deadlines for filing foreign patent applications. The guide is available either by contacting the USPTO Contact Center at 800-786-9199, or it can be viewed on the USPTO website at http://www.uspto.gov/web/offices/pac/doc/general/index.html.

For information on preventing theft of your intellectual property (patents, trademarks and copyrights), you may wish to consult the U.S. Government website, http://www.stopfakes.gov. Part of a Department of Commerce initiative, this website includes self-help "toolkits" giving innovators guidance on how to protect intellectual property in specific countries such as China, Korea and Mexico. For questions regarding patent enforcement issues, applicants may call the U.S. Government hotline at 1-866-999-HALT (1-866-999-4258).

LICENSE FOR FOREIGN FILING UNDER

Title 35, United States Code, Section 184

Title 37, Code of Federal Regulations, 5.11 & 5.15

GRANTED

The applicant has been granted a license under 35 U.S.C. 184, if the phrase "IF REQUIRED, FOREIGN FILING LICENSE GRANTED" followed by a date appears on this form. Such licenses are issued in all applications where the conditions for issuance of a license have been met, regardless of whether or not a license may be required as set forth in 37 CFR 5.15. The scope and limitations of this license are set forth in 37 CFR 5.15(a) unless an earlier license has been issued under 37 CFR 5.15(b). The license is subject to revocation upon written notification. The date indicated is the effective date of the license, unless an earlier license of similar scope has been granted under 37 CFR 5.13 or 5.14.

This license is to be retained by the licensee and may be used at any time on or after the effective date thereof unless it is revoked. This license is automatically transferred to any related applications(s) filed under 37 CFR 1.53(d). This license is not retroactive.

The grant of a license does not in any way lessen the responsibility of a licensee for the security of the subject matter as imposed by any Government contract or the provisions of existing laws relating to espionage and the national security or the export of technical data. Licensees should apprise themselves of current regulations especially with respect to certain countries, of other agencies, particularly the Office of Defense Trade Controls, Department of State (with respect to Arms, Munitions and Implements of War (22 CFR 121-128)); the Bureau of Industry and Security, Department of Commerce (15 CFR parts 730-774); the Office of Foreign AssetsControl, Department of Treasury (31 CFR Parts 500+) and the Department of Energy.

NOT GRANTED

No license under 35 U.S.C. 184 has been granted at this time, if the phrase "IF REQUIRED, FOREIGN FILING LICENSE GRANTED" DOES NOT appear on this form. Applicant may still petition for a license under 37 CFR 5.12, if a license is desired before the expiration of 6 months from the filing date of the application. If 6 months has lapsed from the filing date of this application and the licensee has not received any indication of a secrecy order under 35 U.S.C. 181, the licensee may foreign file the application pursuant to 37 CFR 5.15(b).

SelectUSA

The United States represents the largest, most dynamic marketplace in the world and is an unparalleled location for business investment, innovation, and commercialization of new technologies. The U.S. offers tremendous resources and advantages for those who invest and manufacture goods here. Through SelectUSA, our nation works to promote and facilitate business investment. SelectUSA provides information assistance to the international investor community; serves as an ombudsman for existing and potential investors; advocates on behalf of U.S. cities, states, and regions competing for global investment; and counsels U.S. economic development organizations on investment attraction best practices. To learn more about why the United States is the best country in the world to develop technology, manufacture products, deliver services, and grow your business, visit http://www.SelectUSA.gov or call +1-202-482-6800.

PATENT APPLICATION FEE DETERMINATION RECORD

Substitute for Form PTO-875

Application or Docket Number: 15/035,774

APPLICATION AS FILED - PART I

FOR	(Column 1) NUMBER FILED	(Column 2) NUMBER EXTRA	SMALL ENTITY RATE($)	SMALL ENTITY FEE($)	OR	OTHER THAN SMALL ENTITY RATE($)	OTHER THAN SMALL ENTITY FEE($)
BASIC FEE (37 CFR 1.16(a), (b), or (c))	N/A	N/A	N/A			N/A	280
SEARCH FEE (37 CFR 1.16(k), (i), or (m))	N/A	N/A	N/A			N/A	480
EXAMINATION FEE (37 CFR 1.16(o), (p), or (q))	N/A	N/A	N/A			N/A	720
TOTAL CLAIMS (37 CFR 1.16(i))	14 minus 20 =	*			OR	x 80 =	0.00
INDEPENDENT CLAIMS (37 CFR 1.16(h))	1 minus 3 =	*				x 420 =	0.00
APPLICATION SIZE FEE (37 CFR 1.16(s))	If the specification and drawings exceed 100 sheets of paper, the application size fee due is $310 ($155 for small entity) for each additional 50 sheets or fraction thereof. See 35 U.S.C. 41(a)(1)(G) and 37 CFR 1.16(s).						0.00
MULTIPLE DEPENDENT CLAIM PRESENT (37 CFR 1.16(j))							0.00
* If the difference in column 1 is less than zero, enter "0" in column 2.			TOTAL			TOTAL	1480

APPLICATION AS AMENDED - PART II

		(Column 1) CLAIMS REMAINING AFTER AMENDMENT		(Column 2) HIGHEST NUMBER PREVIOUSLY PAID FOR	(Column 3) PRESENT EXTRA	SMALL ENTITY RATE($)	SMALL ENTITY ADDITIONAL FEE($)	OR	OTHER THAN SMALL ENTITY RATE($)	OTHER THAN SMALL ENTITY ADDITIONAL FEE($)
AMENDMENT A	Total (37 CFR 1.16(i))	*	Minus	**	=	x =		OR	x =	
	Independent (37 CFR 1.16(h))	*	Minus	***	=	x =		OR	x =	
	Application Size Fee (37 CFR 1.16(s))									
	FIRST PRESENTATION OF MULTIPLE DEPENDENT CLAIM (37 CFR 1.16(j))							OR		
						TOTAL ADD'L FEE		OR	TOTAL ADD'L FEE	

		(Column 1) CLAIMS REMAINING AFTER AMENDMENT		(Column 2) HIGHEST NUMBER PREVIOUSLY PAID FOR	(Column 3) PRESENT EXTRA	SMALL ENTITY RATE($)	SMALL ENTITY ADDITIONAL FEE($)	OR	OTHER THAN SMALL ENTITY RATE($)	OTHER THAN SMALL ENTITY ADDITIONAL FEE($)
AMENDMENT B	Total (37 CFR 1.16(i))	*	Minus	**	=	x =		OR	x =	
	Independent (37 CFR 1.16(h))	*	Minus	***	=	x =		OR	x =	
	Application Size Fee (37 CFR 1.16(s))									
	FIRST PRESENTATION OF MULTIPLE DEPENDENT CLAIM (37 CFR 1.16(j))							OR		
						TOTAL ADD'L FEE		OR	TOTAL ADD'L FEE	

* If the entry in column 1 is less than the entry in column 2, write "0" in column 3.

** If the "Highest Number Previously Paid For" IN THIS SPACE is less than 20, enter "20".

*** If the "Highest Number Previously Paid For" IN THIS SPACE is less than 3, enter "3".

The "Highest Number Previously Paid For" (Total or Independent) is the highest found in the appropriate box in column 1.

UNITED STATES PATENT AND TRADEMARK OFFICE

UNITED STATES DEPARTMENT OF COMMERCE
United States Patent and Trademark Office
Address: COMMISSIONER FOR PATENTS
P.O. Box 1450
Alexandria, Virginia 22313-1450
www.uspto.gov

U.S. APPLICATION NUMBER NO.	FIRST NAMED INVENTOR	ATTY. DOCKET NO.
15/035,774	Axel BERGMAN	SC 14208WOUS

78686
Sandvik/Diamond Innovations
6325 Huntley Road
Worthington, OH 43085

INTERNATIONAL APPLICATION NO.	
PCT/EP2014/060594	
I.A. FILING DATE	PRIORITY DATE
05/23/2014	11/12/2013

CONFIRMATION NO. 3999
371 FORMALITIES LETTER

OC000000083597800

Date Mailed: 06/14/2016

Notification of Insufficiency Under 37 CFR 1.492 and/or 1.495 (DO/EO/US)

The following items have been submitted by the applicant or the International Bureau to the United States Patent and Trademark Office as a Designated / Elected Office (37 CFR 1.495).

- Priority Document
- Copy of the International Application filed on 05/11/2016
- Copy of the International Search Report filed on 05/11/2016
- Preliminary Amendments filed on 05/11/2016
- Information Disclosure Statements filed on 05/11/2016
- Inventor's Oath or Declaration filed on 05/11/2016
- Request for Immediate Examination filed on 05/11/2016
- U.S. Basic National Fees filed on 05/11/2016
- Priority Documents filed on 05/11/2016
- Power of Attorney filed on 05/11/2016
- Specification filed on 05/11/2016
- Claims filed on 05/11/2016
- Abstracts filed on 05/11/2016
- Drawings filed on 05/11/2016
- Authorization to Permit Access filed on 05/11/2016
- Application Data Sheet (37 CFR 1.76) filed on 05/11/2016

The following items **MUST** be furnished within the period set forth below:

- To avoid abandonment, a surcharge (for late submission of search fee, examination fee or inventor's oath or declaration) as set forth in 37 CFR 1.492(h) of $140 for an undiscounted entity , must be submitted with the missing items identified in this letter.

SUMMARY OF FEES DUE:

Total additional fees required for this application is $**140** for an Undiscounted Entity:

- $**140** Surcharge.

Applicant is notified that the above-identified application contains the deficiencies noted below. No period for reply is set forth in this notice for correction of these deficiencies. However, if a deficiency relates to the inventor's oath or declaration, the applicant must file an oath or declaration in compliance with 37 CFR 1.63, or a substitute statement in compliance with 37 CFR 1.64, executed by or with respect to each actual inventor no later than the expiration of the time period set in the "Notice of Allowability" to avoid abandonment. See 37 CFR 1.495(c).

- Properly executed inventor's oath or declaration for the following inventor(s) has not been submitted: **Axel BERGMAN**, **Mikael M LARSSON**, **Patric MALMQVIST**, **Anders HALLBERG**, **Matts-Ake NILSSON**, **Fredrik ERIKSSON**, **Bengt-Arne ERIKSSON**, and **Anne HOLOMBERG**

ALL OF THE ITEMS SET FORTH ABOVE MUST BE SUBMITTED WITHIN TWO (2) MONTHS FROM THE DATE OF THIS NOTICE. FAILURE TO PROPERLY RESPOND WILL RESULT IN ABANDONMENT.

The time period set above may be extended by filing a petition and fee for extension of time under the provisions of 37 CFR 1.136(a).

Applicant is reminded that any communications to the United States Patent and Trademark Office must be mailed to the address given in the heading and include the U.S. application no. shown above (37 CFR 1.5)

Registered users of EFS-Web may alternatively submit their reply to this notice via EFS-Web.
https://sportal.uspto.gov/authenticate/AuthenticateUserLocalEPF.html

For more information about EFS-Web please call the USPTO Electronic Business Center at **1-866-217-9197** or visit our website at http://www.uspto.gov/ebc.

If you are not using EFS-Web to submit your reply, you must include a copy of this notice.

DEBORAH D WILLIAMS

Telephone: (571) 272-0466

Application No.: 15/035,774
Paper Dated: July 13, 2016
Attorney Docket No. SC 14208WOUS

IN THE UNITED STATES PATENT AND TRADEMARK OFFICE

In re Application of	:	BERGMAN
Serial No.	:	15/035,774
Confirmation No.	:	3999
Group Art Unit	:	
Examiner	:	
Filed	:	May 11, 2016

Title: GYRATORY CRUSHER MAIN SHAFT AND ASSEMBLY

Commissioner for Patents
P.O. Box 1450
Alexandria, VA 22313-1450

REQUEST FOR CORRECTION TO INVENTOR NAME UNDER 37 CFR 1.48 (f)

Applicant respectfully submits a corrected Application Data Sheet under 37 CFR 1.76 (b)(1) indicating a correction to the spelling of the inventor name. The change is indicated by an underline of the information to be added. A signed Oath is also submitted along with a fee of $140 per 37 CFR 1.17(i).

CONCLUSION

If the Office has any questions or comments or requires any additional information, I invite the Office to telephone me at the number listed below.

Respectfully submitted,

/Corinne Gorski/

Corinne Gorski
Registration No. 34339

Diamond Innovations, Inc.
6325 Huntley Road
Worthington, OH 43085
Tel. 703-505-4761
Fax. 614.438.2235

Electronic Patent Application Fee Transmittal

Application Number:	15035774
Filing Date:	11-May-2016
Title of Invention:	GYRATORY CRUSHER MAIN SHAFT AND ASSEMBLY
First Named Inventor/Applicant Name:	Axel BERGMAN
Filer:	Corinne R. Gorski
Attorney Docket Number:	SC 14208WOUS

Filed as Large Entity

Filing Fees for U.S. National Stage under 35 USC 371

Description	Fee Code	Quantity	Amount	Sub-Total in USD($)
Basic Filing:				
Pages:				
Claims:				
Miscellaneous-Filing:				
Oath/Decl > 30 Mos From 371 commencement	1617	1	140	140
Petition:				
Patent-Appeals-and-Interference:				
Post-Allowance-and-Post-Issuance:				

Description	Fee Code	Quantity	Amount	Sub-Total in USD($)
Extension-of-Time:				
Miscellaneous:				
OTHER PUBLICATION PROCESSING FEE	1808	1	130	130
		Total in USD ($)		**270**

Electronic Acknowledgement Receipt

EFS ID:	26340281
Application Number:	15035774
International Application Number:	
Confirmation Number:	3999
Title of Invention:	GYRATORY CRUSHER MAIN SHAFT AND ASSEMBLY
First Named Inventor/Applicant Name:	Axel BERGMAN
Customer Number:	78686
Filer:	Corinne R. Gorski
Filer Authorized By:	
Attorney Docket Number:	SC 14208WOUS
Receipt Date:	13-JUL-2016
Filing Date:	11-MAY-2016
Time Stamp:	16:11:09
Application Type:	U.S. National Stage under 35 USC 371

Payment information:

Submitted with Payment	yes
Payment Type	Deposit Account
Payment was successfully received in RAM	$270
RAM confirmation Number	13515
Deposit Account	505792
Authorized User	GORSKI, CORINNE R.
The Director of the USPTO is hereby authorized to charge indicated fees and credit any overpayment as follows:	

File Listing:

Document Number	Document Description	File Name	File Size(Bytes)/ Message Digest	Multi Part /.zip	Pages (if appl.)
1	Application Data Sheet	14208WOUScorrectedADS.pdf	1162710 c3cdaf9f372eb8fcaae20659aa64f6aad7f24a97	no	9
Warnings:					
Information:					
This is not an USPTO supplied ADS fillable form					
2	Oath or Declaration filed	14208WOUSSignedOathEriksson.pdf	915770 de81c32965c002b600f0148d79a9d5f46d76e678	no	2
Warnings:					
Information:					
3	Oath or Declaration filed	14208WOUSSignedOathMalmqvist.pdf	1344748 fc3ab56c947797c95c06bb06306b0a2cc2fe7956	no	3
Warnings:					
Information:					
4	Oath or Declaration filed	14208WOUSSignedOathNilsson.pdf	911022 689148f6edb764d00943fd7aeafea5438ffd1d03	no	2
Warnings:					
Information:					
5	Oath or Declaration filed	14208WOUSSignedOathLarsson.pdf	1345910 34bb36ef097d739b4d1a866f574abcb8d002d0bd	no	3
Warnings:					
Information:					
6	Oath or Declaration filed	14208WOUSSignedOathBergman.pdf	830762 143dec84568d84eb257fcc003f613e42bde0b6bb	no	2
Warnings:					

Information:					
7	Oath or Declaration filed	14208WOUSSignedOathHallberg.pdf	835342 7b9f52d4b46274985705d077c6bd7a42f6bd1f3	no	2
Warnings:					
Information:					
8	Oath or Declaration filed	14208WOUSSignedOathHolmberg.pdf	669102 8d7874a9a406d4d72065c9c7d4fda5522655b363	no	2
Warnings:					
Information:					
9	Oath or Declaration filed	14208WOUSSignedOathEriksonBA.pdf	833476 0b2350a78257e0c0561158dd85df9b347bd37d60	no	2
Warnings:					
Information:					
10	Miscellaneous Incoming Letter	14208WOUSLetterforCorrectionofADS.pdf	6891 31a7ebf83dd3ee72efd0f99b80bc6ce5808b7def	no	2
Warnings:					
Information:					
11	Fee Worksheet (SB06)	fee-info.pdf	32247 d89ba196678696ddf271eb9b14f42ea6fec693e1	no	2
Warnings:					
Information:					
		Total Files Size (in bytes):	8887980		

This Acknowledgement Receipt evidences receipt on the noted date by the USPTO of the indicated documents, characterized by the applicant, and including page counts, where applicable. It serves as evidence of receipt similar to a Post Card, as described in MPEP 503.

New Applications Under 35 U.S.C. 111

If a new application is being filed and the application includes the necessary components for a filing date (see 37 CFR 1.53(b)-(d) and MPEP 506), a Filing Receipt (37 CFR 1.54) will be issued in due course and the date shown on this Acknowledgement Receipt will establish the filing date of the application.

National Stage of an International Application under 35 U.S.C. 371

If a timely submission to enter the national stage of an international application is compliant with the conditions of 35 U.S.C. 371 and other applicable requirements a Form PCT/DO/EO/903 indicating acceptance of the application as a national stage submission under 35 U.S.C. 371 will be issued in addition to the Filing Receipt, in due course.

New International Application Filed with the USPTO as a Receiving Office

If a new international application is being filed and the international application includes the necessary components for an international filing date (see PCT Article 11 and MPEP 1810), a Notification of the International Application Number and of the International Filing Date (Form PCT/RO/105) will be issued in due course, subject to prescriptions concerning national security, and the date shown on this Acknowledgement Receipt will establish the international filing date of the application.

PTO/AIA/14 (03-13)
Approved for use through 01/31/2014. OMB 0651-0032
U.S. Patent and Trademark Office; U.S. DEPARTMENT OF COMMERCE
Under the Paperwork Reduction Act of 1995, no persons are required to respond to a collection of information unless it contains a valid OMB control number.

Application Data Sheet 37 CFR 1.76	Attorney Docket Number	SC 14208WOUS
	Application Number	
Title of Invention	GYRATORY CRUSHER MAIN SHAFT AND ASSEMBLY	

The application data sheet is part of the provisional or nonprovisional application for which it is being submitted. The following form contains the bibliographic data arranged in a format specified by the United States Patent and Trademark Office as outlined in 37 CFR 1.76.
This document may be completed electronically and submitted to the Office in electronic format using the Electronic Filing System (EFS) or the document may be printed and included in a paper filed application.

Secrecy Order 37 CFR 5.2

☐ Portions or all of the application associated with this Application Data Sheet may fall under a Secrecy Order pursuant to 37 CFR 5.2 (Paper filers only. Applications that fall under Secrecy Order may not be filed electronically.)

Inventor Information:

Inventor 1 Remove

Legal Name

Prefix	Given Name	Middle Name	Family Name	Suffix
	Axel		BERGMAN	

Residence Information (Select One) ○ US Residency ◉ Non US Residency ○ Active US Military Service

City	Malmo	Country of Residence i	SE

Mailing Address of Inventor:

Address 1	Falsterbogatan 20
Address 2	S-214 36

City	Malmo	State/Province	
Postal Code		**Country** i	SE

Inventor 2 Remove

Legal Name

Prefix	Given Name	Middle Name	Family Name	Suffix
	Mikael	M	LARSSON	

Residence Information (Select One) ○ US Residency ◉ Non US Residency ○ Active US Military Service

City	Eslov	Country of Residence i	SE

Mailing Address of Inventor:

Address 1	Ostarpsvagen 11
Address 2	S-24133

City	Eslov	State/Province	
Postal Code		**Country** i	SE

Inventor 3 Remove

Legal Name

PTO/AIA/14 (03-13)
Approved for use through 01/31/2014. OMB 0651-0032
U.S. Patent and Trademark Office; U.S. DEPARTMENT OF COMMERCE
Under the Paperwork Reduction Act of 1995, no persons are required to respond to a collection of information unless it contains a valid OMB control number.

Application Data Sheet 37 CFR 1.76	Attorney Docket Number	SC 14208WOUS
	Application Number	
Title of Invention	GYRATORY CRUSHER MAIN SHAFT AND ASSEMBLY	

Prefix	Given Name	Middle Name	Family Name	Suffix
	Patric		MALMQVIST	

Residence Information (Select One) ○ US Residency ◉ Non US Residency ○ Active US Military Service

City	Svedala	Country of Residence i	SE

Mailing Address of Inventor:

Address 1	Nilsakessongatan 31		
Address 2	S-23333		
City	Svedala	State/Province	
Postal Code		Country i	SE

Inventor 4 Remove

Legal Name

Prefix	Given Name	Middle Name	Family Name	Suffix
	Anders		HALLBERG	

Residence Information (Select One) ○ US Residency ◉ Non US Residency ○ Active US Military Service

City	Sodra Sandby	Country of Residence i	SE

Mailing Address of Inventor:

Address 1	Stubbvagen 26		
Address 2	S-247 33		
City	Sodra Sandby	State/Province	
Postal Code		Country i	SE

Inventor 5 Remove

Legal Name

Prefix	Given Name	Middle Name	Family Name	Suffix
	Matts-Ake		NILSSON	

Residence Information (Select One) ○ US Residency ◉ Non US Residency ○ Active US Military Service

City	Gards Kopinge	Country of Residence i	SE

Mailing Address of Inventor:

Address 1	Ninas vag 5		
Address 2	S-291 77		
City	Gards Kopinge	State/Province	
Postal Code		Country i	SE

PTO/AIA/14 (03-13)
Approved for use through 01/31/2014. OMB 0651-0032
U.S. Patent and Trademark Office; U.S. DEPARTMENT OF COMMERCE
Under the Paperwork Reduction Act of 1995, no persons are required to respond to a collection of information unless it contains a valid OMB control number.

Application Data Sheet 37 CFR 1.76	Attorney Docket Number	SC 14208WOUS
	Application Number	
Title of Invention	GYRATORY CRUSHER MAIN SHAFT AND ASSEMBLY	

Inventor 6 Remove

Legal Name

Prefix	Given Name	Middle Name	Family Name	Suffix
	Fredrik		ERIKSSON	

Residence Information (Select One) ○ US Residency ◉ Non US Residency ○ Active US Military Service

City	Malmo	Country of Residence [i]	SE

Mailing Address of Inventor:

Address 1	Gronegatan 34		
Address 2	S-21127		
City	Malmo	State/Province	
Postal Code		Country [i]	SE

Inventor 7 Remove

Legal Name

Prefix	Given Name	Middle Name	Family Name	Suffix
	Bengt-Arne		ERIKSSON	

Residence Information (Select One) ○ US Residency ◉ Non US Residency ○ Active US Military Service

City	Svedala	Country of Residence [i]	SE

Mailing Address of Inventor:

Address 1	Sveagatan 4		
Address 2	S-233 33		
City	Svedala	State/Province	
Postal Code		Country [i]	SE

Inventor 8 Remove

Legal Name

Prefix	Given Name	Middle Name	Family Name	Suffix
	Anne		~~HOLMBERG~~ HOLMBERG	

Residence Information (Select One) ○ US Residency ◉ Non US Residency ○ Active US Military Service

City	Loddekopinge	Country of Residence [i]	SE

Mailing Address of Inventor:

Address 1	Bagerivagen 22
Address 2	S-246 30

PTO/AIA/14 (03-13)
Approved for use through 01/31/2014. OMB 0651-0032
U.S. Patent and Trademark Office; U.S. DEPARTMENT OF COMMERCE
Under the Paperwork Reduction Act of 1995, no persons are required to respond to a collection of information unless it contains a valid OMB control number.

Application Data Sheet 37 CFR 1.76	Attorney Docket Number	SC 14208WOUS
	Application Number	
Title of Invention	GYRATORY CRUSHER MAIN SHAFT AND ASSEMBLY	

City	Loddekopinge	State/Province	
Postal Code		Country i	SE

All Inventors Must Be Listed - Additional Inventor Information blocks may be generated within this form by selecting the **Add** button. Add

Correspondence Information:

Enter either Customer Number or complete the Correspondence Information section below.
For further information see 37 CFR 1.33(a).

☐ An Address is being provided for the correspondence Information of this application.

Customer Number	78686	
Email Address		Add Email

Application Information:

Title of the Invention	GYRATORY CRUSHER MAIN SHAFT AND ASSEMBLY		
Attorney Docket Number	SC 14208WOUS	Small Entity Status Claimed	☐
Application Type	Nonprovisional		
Subject Matter	Utility		
Total Number of Drawing Sheets (if any)		Suggested Figure for Publication (if any)	

Publication Information:

☐ Request Early Publication (Fee required at time of Request 37 CFR 1.219)

☐ **Request Not to Publish.** I hereby request that the attached application not be published under 35 U.S.C. 122(b) and certify that the invention disclosed in the attached application **has not and will not** be the subject of an application filed in another country, or under a multilateral international agreement, that requires publication at eighteen months after filing.

Representative Information:

Representative information should be provided for all practitioners having a power of attorney in the application. Providing this information in the Application Data Sheet does not constitute a power of attorney in the application (see 37 CFR 1.32).
Either enter Customer Number or complete the Representative Name section below. If both sections are completed the customer Number will be used for the Representative Information during processing.

Please Select One:	◉ Customer Number	○ US Patent Practitioner	○ Limited Recognition (37 CFR 11.9)
Customer Number	78686		

PTO/AIA/14 (03-13)
Approved for use through 01/31/2014. OMB 0651-0032
U.S. Patent and Trademark Office; U.S. DEPARTMENT OF COMMERCE
Under the Paperwork Reduction Act of 1995, no persons are required to respond to a collection of information unless it contains a valid OMB control number.

Application Data Sheet 37 CFR 1.76	Attorney Docket Number	SC 14208WOUS
	Application Number	
Title of Invention	GYRATORY CRUSHER MAIN SHAFT AND ASSEMBLY	

Domestic Benefit/National Stage Information:

This section allows for the applicant to either claim benefit under 35 U.S.C. 119(e), 120, 121, or 365(c) or indicate National Stage entry from a PCT application. Providing this information in the application data sheet constitutes the specific reference required by 35 U.S.C. 119(e) or 120, and 37 CFR 1.78.

Prior Application Status	Pending	Remove	
Application Number	Continuity Type	Prior Application Number	Filing Date (YYYY-MM-DD)
	a 371 of international	PCT/EP2014/060594	2014-05-23

Additional Domestic Benefit/National Stage Data may be generated within this form by selecting the **Add** button.

Foreign Priority Information:

This section allows for the applicant to claim priority to a foreign application. Providing this information in the application data sheet constitutes the claim for priority as required by 35 U.S.C. 119(b) and 37 CFR 1.55(d). When priority is claimed to a foreign application that is eligible for retrieval under the priority document exchange program (PDX)[i] the information will be used by the Office to automatically attempt retrieval pursuant to 37 CFR 1.55(h)(1) and (2). Under the PDX program, applicant bears the ultimate responsibility for ensuring that a copy of the foreign application is received by the Office from the participating foreign intellectual property office, or a certified copy of the foreign priority application is filed, within the time period specified in 37 CFR 1.55(g)(1).

Remo...

Application Number	Country[i]	Filing Date (YYYY-MM-DD)	Access Code[i] (if applicable)
13192402.9	EP	2013-11-12	

Additional Foreign Priority Data may be generated within this form by selecting the **Add** button.

Statement under 37 CFR 1.55 or 1.78 for AIA (First Inventor to File) Transition Applications

☐ This application (1) claims priority to or the benefit of an application filed before March 16, 2013 and (2) also contains, or contained at any time, a claim to a claimed invention that has an effective filing date on or after March 16, 2013.

Authorization to Permit Access:

☒ Authorization to Permit Access to the Instant Application by the Participating Offices

PTO/AIA/14 (03-13)
Approved for use through 01/31/2014. OMB 0651-0032
U.S. Patent and Trademark Office, U.S. DEPARTMENT OF COMMERCE
Under the Paperwork Reduction Act of 1995, no persons are required to respond to a collection of information unless it contains a valid OMB control number.

Application Data Sheet 37 CFR 1.76	Attorney Docket Number	SC 14208WOUS
	Application Number	
Title of Invention	GYRATORY CRUSHER MAIN SHAFT AND ASSEMBLY	

If checked, the undersigned hereby grants the USPTO authority to provide the European Patent Office (EPO), the Japan Patent Office (JPO), the Korean Intellectual Property Office (KIPO), the World Intellectual Property Office (WIPO), and any other intellectual property offices in which a foreign application claiming priority to the instant patent application is filed access to the instant patent application. See 37 CFR 1.14(c) and (h). This box should not be checked if the applicant does not wish the EPO, JPO, KIPO, WIPO, or other intellectual property office in which a foreign application claiming priority to the instant patent application is filed to have access to the instant patent application.

In accordance with 37 CFR 1.14(h)(3), access will be provided to a copy of the instant patent application with respect to: 1) the instant patent application-as-filed; 2) any foreign application to which the instant patent application claims priority under 35 U.S.C. 119(a)-(d) if a copy of the foreign application that satisfies the certified copy requirement of 37 CFR 1.55 has been filed in the instant patent application; and 3) any U.S. application-as-filed from which benefit is sought in the instant patent application.

In accordance with 37 CFR 1.14(c), access may be provided to information concerning the date o f filing this Authorization.

Applicant Information:

Providing assignment information in this section does not substitute for compliance with any requirement of part 3 of Title 37 of CFR to have an assignment recorded by the Office.

Applicant 1

If the applicant is the inventor (or the remaining joint inventor or inventors under 37 CFR 1.45), this section should not be completed. The information to be provided in this section is the name and address of the legal representative who is the applicant under 37 CFR 1.43; or the name and address of the assignee, person to whom the inventor is under an obligation to assign the invention, or person who otherwise shows sufficient proprietary interest in the matter who is the applicant under 37 CFR 1.46. If the applicant is an applicant under 37 CFR 1.46 (assignee, person to whom the inventor is obligated to assign, or person who otherwise shows sufficient proprietary interest) together with one or more joint inventors, then the joint inventor or inventors who are also the applicant should be identified in this section.

Clear

(●) Assignee	( ) Legal Representative under 35 U.S.C. 117	( ) Joint Inventor
( ) Person to whom the inventor is obligated to assign.	( ) Person who shows sufficient proprietary interest	

If applicant is the legal representative, indicate the authority to file the patent application, the inventor is:

Name of the Deceased or Legally Incapacitated Inventor :

If the Applicant is an Organization check here. ☒

Organization Name	SANDVIK INTELECTUAL PROPERTY AB

Mailing Address Information For Applicant:

Address 1	SE-811 81		
Address 2			
City	Sandviken	**State/Province**	
Country	SE	Postal Code	
Phone Number		Fax Number	

PTO/AIA/14 (03-13)
Approved for use through 01/31/2014. OMB 0651-0032
U.S. Patent and Trademark Office; U.S. DEPARTMENT OF COMMERCE
Under the Paperwork Reduction Act of 1995, no persons are required to respond to a collection of information unless it contains a valid OMB control number.

Application Data Sheet 37 CFR 1.76	Attorney Docket Number	SC 14208WOUS
	Application Number	
Title of Invention	GYRATORY CRUSHER MAIN SHAFT AND ASSEMBLY	

Email Address	

Additional Applicant Data may be generated within this form by selecting the Add button.

Non-Applicant Assignee Information:

Providing assignment information in this section does not subsitute for compliance with any requirement of part 3 of Title 37 of CFR to have an assignment recorded by the Office.

Assignee 1

Complete this section only if non-applicant assignee information is desired to be included on the patent application publication in accordance with 37 CFR 1.215(b). Do not include in this section an applicant under 37 CFR 1.46 (assignee, person to whom the inventor is obligated to assign, or person who otherwise shows sufficient proprietary interest), as the patent application publication will include the name of the applicant(s).

If the Assignee is an Organization check here. ☐

Prefix	**Given Name**	Middle Name	**Family Name**	Suffix

Mailing Address Information For Non-Applicant Assignee:

Address 1			
Address 2			
City		**State/Province**	
Country i		Postal Code	
Phone Number		Fax Number	
Email Address			

Additional Assignee Data may be generated within this form by selecting the Add button.

Signature:

NOTE: This form must be signed in accordance with 37 CFR 1.33. See 37 CFR 1.4 for signature requirements and certifications.

Signature	/Corinne Gorski/			Date (YYYY-MM-DD)	2016-05-11
First Name	Corinne	Last Name	Gorski	Registration Number	34339

Additional Signature may be generated within this form by selecting the Add button.

PTO/AIA/14 (03-13)
Approved for use through 01/31/2014. OMB 0651-0032
U.S. Patent and Trademark Office; U.S. DEPARTMENT OF COMMERCE
Under the Paperwork Reduction Act of 1995, no persons are required to respond to a collection of information unless it contains a valid OMB control number.

Application Data Sheet 37 CFR 1.76	Attorney Docket Number	SC 14208WOUS
	Application Number	
Title of Invention	GYRATORY CRUSHER MAIN SHAFT AND ASSEMBLY	

This collection of information is required by 37 CFR 1.76. The information is required to obtain or retain a benefit by the public which is to file (and by the USPTO to process) an application. Confidentiality is governed by 35 U.S.C. 122 and 37 CFR 1.14. This collection is estimated to take 23 minutes to complete, including gathering, preparing, and submitting the completed application data sheet form to the USPTO. Time will vary depending upon the individual case. Any comments on the amount of time you require to complete this form and/or suggestions for reducing this burden, should be sent to the Chief Information Officer, U.S. Patent and Trademark Office, U.S. Department of Commerce, P.O. Box 1450, Alexandria, VA 22313-1450. DO NOT SEND FEES OR COMPLETED FORMS TO THIS ADDRESS. **SEND TO: Commissioner for Patents, P.O. Box 1450, Alexandria, VA 22313-1450.**

Privacy Act Statement

The Privacy Act of 1974 (P.L. 93-579) requires that you be given certain information in connection with your submission of the attached form related to a patent application or patent. Accordingly, pursuant to the requirements of the Act, please be advised that: (1) the general authority for the collection of this information is 35 U.S.C. 2(b)(2); (2) furnishing of the information solicited is voluntary; and (3) the principal purpose for which the information is used by the U.S. Patent and Trademark Office is to process and/or examine your submission related to a patent application or patent. If you do not furnish the requested information, the U.S. Patent and Trademark Office may not be able to process and/or examine your submission, which may result in termination of proceedings or abandonment of the application or expiration of the patent.

The information provided by you in this form will be subject to the following routine uses:

1. The information on this form will be treated confidentially to the extent allowed under the Freedom of Information Act (5 U.S.C. 552) and the Privacy Act (5 U.S.C. 552a). Records from this system of records may be disclosed to the Department of Justice to determine whether the Freedom of Information Act requires disclosure of these records.

2. A record from this system of records may be disclosed, as a routine use, in the course of presenting evidence to a court, magistrate, or administrative tribunal, including disclosures to opposing counsel in the course of settlement negotiations.

3. A record in this system of records may be disclosed, as a routine use, to a Member of Congress submitting a request involving an individual, to whom the record pertains, when the individual has requested assistance from the Member with respect to the subject matter of the record.

4. A record in this system of records may be disclosed, as a routine use, to a contractor of the Agency having need for the information in order to perform a contract. Recipients of information shall be required to comply with the requirements of the Privacy Act of 1974, as amended, pursuant to 5 U.S.C. 552a(m).

5. A record related to an International Application filed under the Patent Cooperation Treaty in this system of records may be disclosed, as a routine use, to the International Bureau of the World Intellectual Property Organization, pursuant to the Patent Co o p eration Treaty.

6. A record in this system of records may be disclosed, as a routine use, to another federal agency for purposes of National Security review (35 U.S.C. 181) and for review pursuant to the Atomic Energy Act (42 U.S.C. 218(c)).

7. A record from this system of records may be disclosed, as a routine use, to the Administrator, General Services, or his/her designee, during an inspection of records conducted by GSA as part of that agency's responsibility to recommend improvements in records management practices and programs, under authority of 44 U.S.C. 2904 and 2906. Such disclosure shall be made in accordance with the GSA regulations governing inspection of records for this purpose, and any other relevant (i.e., GSA or Commerce) directive. Such disclosure shall not be used to make determinations about individuals.

8. A record from this system of records may be disclosed, as a routine use, to the public after either publication of the application pursuant to 35 U.S.C. 122(b) or issuance of a patent pursuant to 35 U.S.C. 151. Further, a record may be disclosed, subject to the limitations of 37 CFR 1.14, as a routine use, to the public if the record was filed in an application which became abandoned or in which the proceedings were terminated and which application is referenced by either a published application, an application open to public inspections or an issued patent.

9. A record from this system of records may be disclosed, as a routine use, to a Federal, State, or local law enforcement agency, if the USPTO becomes aware of a violation or potential violation of law or regulation.

PTO/AIA/01 (06-12)
Approved for use through 01/31/2014. OMB 0651-0032
U.S. Patent and Trademark Office, U.S. DEPARTMENT OF COMMERCE
Under the Paperwork Reduction Act of 1995, no persons are required to respond to a collection of information unless it displays a valid OMB control number.

DECLARATION (37 CFR 1.63) FOR UTILITY OR DESIGN APPLICATION USING AN APPLICATION DATA SHEET (37 CFR 1.76)

Title of Invention	GYRATORY CRUSHER MAIN SHAFT AND ASSEMBLY

As the below named inventor, I hereby declare that:

This declaration is directed to:

- [x] The attached application, or
- [ ] United States application or PCT international application number _____

filed on _____.

The above-identified application was made or authorized to be made by me.

I believe that I am the original inventor or an original joint inventor of a claimed invention in the application.

I hereby acknowledge that any willful false statement made in this declaration is punishable under 18 U.S.C. 1001 by fine or imprisonment of not more than five (5) years, or both.

WARNING:

Petitioner/applicant is cautioned to avoid submitting personal information in documents filed in a patent application that may contribute to identity theft. Personal information such as social security numbers, bank account numbers, or credit card numbers (other than a check or credit card authorization form PTO-2038 submitted for payment purposes) is never required by the USPTO to support a petition or an application. If this type of personal information is included in documents submitted to the USPTO, petitioners/applicants should consider redacting such personal information from the documents before submitting them to the USPTO. Petitioner/applicant is advised that the record of a patent application is available to the public after publication of the application (unless a non-publication request in compliance with 37 CFR 1.213(a) is made in the application) or issuance of a patent. Furthermore, the record from an abandoned application may also be available to the public if the application is referenced in a published application or an issued patent (see 37 CFR 1.14). Checks and credit card authorization forms PTO-2038 submitted for payment purposes are not retained in the application file and therefore are not publicly available.

LEGAL NAME OF INVENTOR

Inventor: ERIKSSON, Fredrik Date (Optional): _____

Signature: _____

Note: An application data sheet (PTO/AIA/14 or equivalent), including naming the entire inventive entity, must accompany this form. Use an additional PTO/SB/AIA01 form for each additional inventor.

This collection of information is required by 35 U.S.C. 115 and 37 CFR 1.63. The information is required to obtain or retain a benefit by the public which is to file (and by the USPTO to process) an application. Confidentiality is governed by 35 U.S.C. 122 and 37 CFR 1.11 and 1.14. This collection is estimated to take 1 minute to complete, including gathering, preparing, and submitting the completed application form to the USPTO. Time will vary depending upon the individual case. Any comments on the amount of time you require to complete this form and/or suggestions for reducing this burden, should be sent to the Chief Information Officer, U.S. Patent and Trademark Office, U.S. Department of Commerce, P.O. Box 1450, Alexandria, VA 22313-1450. DO NOT SEND FEES OR COMPLETED FORMS TO THIS ADDRESS. **SEND TO: Commissioner for Patents, P.O. Box 1450, Alexandria, VA 22313-1450.**

If you need assistance in completing the form, call 1-800-PTO-9199 and select option 2.

Privacy Act Statement

The **Privacy Act of 1974 (P.L. 93-579)** requires that you be given certain information in connection with your submission of the attached form related to a patent application or patent. Accordingly, pursuant to the requirements of the Act, please be advised that: (1) the general authority for the collection of this information is 35 U.S.C. 2(b)(2); (2) furnishing of the information solicited is voluntary; and (3) the principal purpose for which the information is used by the U.S. Patent and Trademark Office is to process and/or examine your submission related to a patent application or patent. If you do not furnish the requested information, the U.S. Patent and Trademark Office may not be able to process and/or examine your submission, which may result in termination of proceedings or abandonment of the application or expiration of the patent.

The information provided by you in this form will be subject to the following routine uses:

1. The information on this form will be treated confidentially to the extent allowed under the Freedom of Information Act (5 U.S.C. 552) and the Privacy Act (5 U.S.C 552a). Records from this system of records may be disclosed to the Department of Justice to determine whether disclosure of these records is required by the Freedom of Information Act.
2. A record from this system of records may be disclosed, as a routine use, in the course of presenting evidence to a court, magistrate, or administrative tribunal, including disclosures to opposing counsel in the course of settlement negotiations.
3. A record in this system of records may be disclosed, as a routine use, to a Member of Congress submitting a request involving an individual, to whom the record pertains, when the individual has requested assistance from the Member with respect to the subject matter of the record.
4. A record in this system of records may be disclosed, as a routine use, to a contractor of the Agency having need for the information in order to perform a contract. Recipients of information shall be required to comply with the requirements of the Privacy Act of 1974, as amended, pursuant to 5 U.S.C. 552a(m).
5. A record related to an International Application filed under the Patent Cooperation Treaty in this system of records may be disclosed, as a routine use, to the International Bureau of the World Intellectual Property Organization, pursuant to the Patent Cooperation Treaty.
6. A record in this system of records may be disclosed, as a routine use, to another federal agency for purposes of National Security review (35 U.S.C. 181) and for review pursuant to the Atomic Energy Act (42 U.S.C. 218(c)).
7. A record from this system of records may be disclosed, as a routine use, to the Administrator, General Services, or his/her designee, during an inspection of records conducted by GSA as part of that agency's responsibility to recommend improvements in records management practices and programs, under authority of 44 U.S.C. 2904 and 2906. Such disclosure shall be made in accordance with the GSA regulations governing inspection of records for this purpose, and any other relevant (*i.e.*, GSA or Commerce) directive. Such disclosure shall not be used to make determinations about individuals.
8. A record from this system of records may be disclosed, as a routine use, to the public after either publication of the application pursuant to 35 U.S.C. 122(b) or issuance of a patent pursuant to 35 U.S.C. 151. Further, a record may be disclosed, subject to the limitations of 37 CFR 1.14, as a routine use, to the public if the record was filed in an application which became abandoned or in which the proceedings were terminated and which application is referenced by either a published application, an application open to public inspection or an issued patent.
9. A record from this system of records may be disclosed, as a routine use, to a Federal, State, or local law enforcement agency, if the USPTO becomes aware of a violation or potential violation of law or regulation.

PTO/AIA/01 (06-12)
Approved for use through 01/31/2014. OMB 0651-0032
U.S. Patent and Trademark Office: U.S. DEPARTMENT OF COMMERCE
Under the Paperwork Reduction Act of 1995, no persons are required to respond to a collection of information unless it displays a valid OMB control number.

DECLARATION (37 CFR 1.63) FOR UTILITY OR DESIGN APPLICATION USING AN APPLICATION DATA SHEET (37 CFR 1.76)

Title of Invention	GYRATORY CRUSHER MAIN SHAFT AND ASSEMBLY

As the below named inventor, I hereby declare that:

This declaration is directed to:

- [x] The attached application, or
- [ ] United States application or PCT international application number _____

filed on _____.

The above-identified application was made or authorized to be made by me.

I believe that I am the original inventor or an original joint inventor of a claimed invention in the application.

I hereby acknowledge that any willful false statement made in this declaration is punishable under 18 U.S.C. 1001 by fine or imprisonment of not more than five (5) years, or both.

WARNING:

Petitioner/applicant is cautioned to avoid submitting personal information in documents filed in a patent application that may contribute to identity theft. Personal information such as social security numbers, bank account numbers, or credit card numbers (other than a check or credit card authorization form PTO-2038 submitted for payment purposes) is never required by the USPTO to support a petition or an application. If this type of personal information is included in documents submitted to the USPTO, petitioners/applicants should consider redacting such personal information from the documents before submitting them to the USPTO. Petitioner/applicant is advised that the record of a patent application is available to the public after publication of the application (unless a non-publication request in compliance with 37 CFR 1.213(a) is made in the application) or issuance of a patent. Furthermore, the record from an abandoned application may also be available to the public if the application is referenced in a published application or an issued patent (see 37 CFR 1.14). Checks and credit card authorization forms PTO-2038 submitted for payment purposes are not retained in the application file and therefore are not publicly available.

LEGAL NAME OF INVENTOR

Inventor: MALMQVIST, Patric Date (Optional): 2016-04-05

Signature: _____

Note: An application data sheet (PTO/AIA/14 or equivalent), including naming the entire inventive entity, must accompany this form. Use an additional PTO/SB/AIA01 form for each additional inventor.

This collection of information is required by 35 U.S.C. 115 and 37 CFR 1.63. The information is required to obtain or retain a benefit by the public which is to file (and by the USPTO to process) an application. Confidentiality is governed by 35 U.S.C. 122 and 37 CFR 1.11 and 1.14. This collection is estimated to take 1 minute to complete, including gathering, preparing, and submitting the completed application form to the USPTO. Time will vary depending upon the individual case. Any comments on the amount of time you require to complete this form and/or suggestions for reducing this burden, should be sent to the Chief Information Officer, U.S. Patent and Trademark Office, U.S. Department of Commerce, P.O. Box 1450, Alexandria, VA 22313-1450. DO NOT SEND FEES OR COMPLETED FORMS TO THIS ADDRESS. **SEND TO: Commissioner for Patents, P.O. Box 1450, Alexandria, VA 22313-1450.**

If you need assistance in completing the form, call 1-800-PTO-9199 and select option 2.

Privacy Act Statement

The **Privacy Act of 1974 (P.L. 93-579)** requires that you be given certain information in connection with your submission of the attached form related to a patent application or patent. Accordingly, pursuant to the requirements of the Act, please be advised that: (1) the general authority for the collection of this information is 35 U.S.C. 2(b)(2); (2) furnishing of the information solicited is voluntary; and (3) the principal purpose for which the information is used by the U.S. Patent and Trademark Office is to process and/or examine your submission related to a patent application or patent. If you do not furnish the requested information, the U.S. Patent and Trademark Office may not be able to process and/or examine your submission, which may result in termination of proceedings or abandonment of the application or expiration of the patent.

The information provided by you in this form will be subject to the following routine uses:

1. The information on this form will be treated confidentially to the extent allowed under the Freedom of Information Act (5 U.S.C. 552) and the Privacy Act (5 U.S.C 552a). Records from this system of records may be disclosed to the Department of Justice to determine whether disclosure of these records is required by the Freedom of Information Act.
2. A record from this system of records may be disclosed, as a routine use, in the course of presenting evidence to a court, magistrate, or administrative tribunal, including disclosures to opposing counsel in the course of settlement negotiations.
3. A record in this system of records may be disclosed, as a routine use, to a Member of Congress submitting a request involving an individual, to whom the record pertains, when the individual has requested assistance from the Member with respect to the subject matter of the record.
4. A record in this system of records may be disclosed, as a routine use, to a contractor of the Agency having need for the information in order to perform a contract. Recipients of information shall be required to comply with the requirements of the Privacy Act of 1974, as amended, pursuant to 5 U.S.C. 552a(m).
5. A record related to an International Application filed under the Patent Cooperation Treaty in this system of records may be disclosed, as a routine use, to the International Bureau of the World Intellectual Property Organization, pursuant to the Patent Cooperation Treaty.
6. A record in this system of records may be disclosed, as a routine use, to another federal agency for purposes of National Security review (35 U.S.C. 181) and for review pursuant to the Atomic Energy Act (42 U.S.C. 218(c)).
7. A record from this system of records may be disclosed, as a routine use, to the Administrator, General Services, or his/her designee, during an inspection of records conducted by GSA as part of that agency's responsibility to recommend improvements in records management practices and programs, under authority of 44 U.S.C. 2904 and 2906. Such disclosure shall be made in accordance with the GSA regulations governing inspection of records for this purpose, and any other relevant (*i.e.*, GSA or Commerce) directive. Such disclosure shall not be used to make determinations about individuals.
8. A record from this system of records may be disclosed, as a routine use, to the public after either publication of the application pursuant to 35 U.S.C. 122(b) or issuance of a patent pursuant to 35 U.S.C. 151. Further, a record may be disclosed, subject to the limitations of 37 CFR 1.14, as a routine use, to the public if the record was filed in an application which became abandoned or in which the proceedings were terminated and which application is referenced by either a published application, an application open to public inspection or an issued patent.
9. A record from this system of records may be disclosed, as a routine use, to a Federal, State, or local law enforcement agency, if the USPTO becomes aware of a violation or potential violation of law or regulation.

PTO/AIA/01 (06-12)
Approved for use through 01/31/2014. OMB 0651-0032
U.S. Patent and Trademark Office, U.S. DEPARTMENT OF COMMERCE
Under the Paperwork Reduction Act of 1995, no persons are required to respond to a collection of information unless it displays a valid OMB control number.

DECLARATION (37 CFR 1.63) FOR UTILITY OR DESIGN APPLICATION USING AN APPLICATION DATA SHEET (37 CFR 1.76)

Title of Invention	GYRATORY CRUSHER MAIN SHAFT AND ASSEMBLY

As the below named inventor, I hereby declare that:

This declaration is directed to:

- [x] The attached application, or
- [ ] United States application or PCT international application number _____

filed on _____.

The above-identified application was made or authorized to be made by me.

I believe that I am the original inventor or an original joint inventor of a claimed invention in the application.

I hereby acknowledge that any willful false statement made in this declaration is punishable under 18 U.S.C. 1001 by fine or imprisonment of not more than five (5) years, or both.

WARNING:

Petitioner/applicant is cautioned to avoid submitting personal information in documents filed in a patent application that may contribute to identity theft. Personal information such as social security numbers, bank account numbers, or credit card numbers (other than a check or credit card authorization form PTO-2038 submitted for payment purposes) is never required by the USPTO to support a petition or an application. If this type of personal information is included in documents submitted to the USPTO, petitioners/applicants should consider redacting such personal information from the documents before submitting them to the USPTO. Petitioner/applicant is advised that the record of a patent application is available to the public after publication of the application (unless a non-publication request in compliance with 37 CFR 1.213(a) is made in the application) or issuance of a patent. Furthermore, the record from an abandoned application may also be available to the public if the application is referenced in a published application or an issued patent (see 37 CFR 1.14). Checks and credit card authorization forms PTO-2038 submitted for payment purposes are not retained in the application file and therefore are not publicly available.

LEGAL NAME OF INVENTOR

Inventor: ERIKSSON, Fredrik Date (Optional): _____

Signature: _____

Note: An application data sheet (PTO/AIA/14 or equivalent), including naming the entire inventive entity, must accompany this form. Use an additional PTO/SB/AIA01 form for each additional inventor.

This collection of information is required by 35 U.S.C. 115 and 37 CFR 1.63. The information is required to obtain or retain a benefit by the public which is to file (and by the USPTO to process) an application. Confidentiality is governed by 35 U.S.C. 122 and 37 CFR 1.11 and 1.14. This collection is estimated to take 1 minute to complete, including gathering, preparing, and submitting the completed application form to the USPTO. Time will vary depending upon the individual case. Any comments on the amount of time you require to complete this form and/or suggestions for reducing this burden, should be sent to the Chief Information Officer, U.S. Patent and Trademark Office, U.S. Department of Commerce, P.O. Box 1450, Alexandria, VA 22313-1450. DO NOT SEND FEES OR COMPLETED FORMS TO THIS ADDRESS. **SEND TO: Commissioner for Patents, P.O. Box 1450, Alexandria, VA 22313-1450.**

If you need assistance in completing the form, call 1-800-PTO-9199 and select option 2.

PTO/AIA/01 (06-12)
Approved for use through 01/31/2014. OMB 0651-0032
U.S. Patent and Trademark Office; U.S. DEPARTMENT OF COMMERCE
Under the Paperwork Reduction Act of 1995, no persons are required to respond to a collection of information unless it displays a valid OMB control number.

DECLARATION (37 CFR 1.63) FOR UTILITY OR DESIGN APPLICATION USING AN APPLICATION DATA SHEET (37 CFR 1.76)

Title of Invention	GYRATORY CRUSHER MAIN SHAFT AND ASSEMBLY

As the below named inventor, I hereby declare that:

This declaration is directed to:

- [x] The attached application, or
- [ ] United States application or PCT international application number _____ filed on _____.

The above-identified application was made or authorized to be made by me.

I believe that I am the original inventor or an original joint inventor of a claimed invention in the application.

I hereby acknowledge that any willful false statement made in this declaration is punishable under 18 U.S.C. 1001 by fine or imprisonment of not more than five (5) years, or both.

WARNING:

Petitioner/applicant is cautioned to avoid submitting personal information in documents filed in a patent application that may contribute to identity theft. Personal information such as social security numbers, bank account numbers, or credit card numbers (other than a check or credit card authorization form PTO-2038 submitted for payment purposes) is never required by the USPTO to support a petition or an application. If this type of personal information is included in documents submitted to the USPTO, petitioners/applicants should consider redacting such personal information from the documents before submitting them to the USPTO. Petitioner/applicant is advised that the record of a patent application is available to the public after publication of the application (unless a non-publication request in compliance with 37 CFR 1.213(a) is made in the application) or issuance of a patent. Furthermore, the record from an abandoned application may also be available to the public if the application is referenced in a published application or an issued patent (see 37 CFR 1.14). Checks and credit card authorization forms PTO-2038 submitted for payment purposes are not retained in the application file and therefore are not publicly available.

LEGAL NAME OF INVENTOR

Inventor: NILSSON, Matts-Ake Date (Optional): 20160509

Signature: Matts-Åke Nilsson

Note: An application data sheet (PTO/AIA/14 or equivalent), including naming the entire inventive entity, must accompany this form. Use an additional PTO/SB/AIA01 form for each additional inventor.

This collection of information is required by 35 U.S.C. 115 and 37 CFR 1.63. The information is required to obtain or retain a benefit by the public which is to file (and by the USPTO to process) an application. Confidentiality is governed by 35 U.S.C. 122 and 37 CFR 1.11 and 1.14. This collection is estimated to take 1 minute to complete, including gathering, preparing, and submitting the completed application form to the USPTO. Time will vary depending upon the individual case. Any comments on the amount of time you require to complete this form and/or suggestions for reducing this burden, should be sent to the Chief Information Officer, U.S. Patent and Trademark Office, U.S. Department of Commerce, P.O. Box 1450, Alexandria, VA 22313-1450. DO NOT SEND FEES OR COMPLETED FORMS TO THIS ADDRESS. **SEND TO: Commissioner for Patents, P.O. Box 1450, Alexandria, VA 22313-1450.**

If you need assistance in completing the form, call 1-800-PTO-9199 and select option 2.

Privacy Act Statement

The **Privacy Act of 1974 (P.L. 93-579)** requires that you be given certain information in connection with your submission of the attached form related to a patent application or patent. Accordingly, pursuant to the requirements of the Act, please be advised that: (1) the general authority for the collection of this information is 35 U.S.C. 2(b)(2); (2) furnishing of the information solicited is voluntary; and (3) the principal purpose for which the information is used by the U.S. Patent and Trademark Office is to process and/or examine your submission related to a patent application or patent. If you do not furnish the requested information, the U.S. Patent and Trademark Office may not be able to process and/or examine your submission, which may result in termination of proceedings or abandonment of the application or expiration of the patent.

The information provided by you in this form will be subject to the following routine uses:

1. The information on this form will be treated confidentially to the extent allowed under the Freedom of Information Act (5 U.S.C. 552) and the Privacy Act (5 U.S.C 552a). Records from this system of records may be disclosed to the Department of Justice to determine whether disclosure of these records is required by the Freedom of Information Act.
2. A record from this system of records may be disclosed, as a routine use, in the course of presenting evidence to a court, magistrate, or administrative tribunal, including disclosures to opposing counsel in the course of settlement negotiations.
3. A record in this system of records may be disclosed, as a routine use, to a Member of Congress submitting a request involving an individual, to whom the record pertains, when the individual has requested assistance from the Member with respect to the subject matter of the record.
4. A record in this system of records may be disclosed, as a routine use, to a contractor of the Agency having need for the information in order to perform a contract. Recipients of information shall be required to comply with the requirements of the Privacy Act of 1974, as amended, pursuant to 5 U.S.C. 552a(m).
5. A record related to an International Application filed under the Patent Cooperation Treaty in this system of records may be disclosed, as a routine use, to the International Bureau of the World Intellectual Property Organization, pursuant to the Patent Cooperation Treaty.
6. A record in this system of records may be disclosed, as a routine use, to another federal agency for purposes of National Security review (35 U.S.C. 181) and for review pursuant to the Atomic Energy Act (42 U.S.C. 218(c)).
7. A record from this system of records may be disclosed, as a routine use, to the Administrator, General Services, or his/her designee, during an inspection of records conducted by GSA as part of that agency's responsibility to recommend improvements in records management practices and programs, under authority of 44 U.S.C. 2904 and 2906. Such disclosure shall be made in accordance with the GSA regulations governing inspection of records for this purpose, and any other relevant (*i.e.*, GSA or Commerce) directive. Such disclosure shall not be used to make determinations about individuals.
8. A record from this system of records may be disclosed, as a routine use, to the public after either publication of the application pursuant to 35 U.S.C. 122(b) or issuance of a patent pursuant to 35 U.S.C. 151. Further, a record may be disclosed, subject to the limitations of 37 CFR 1.14, as a routine use, to the public if the record was filed in an application which became abandoned or in which the proceedings were terminated and which application is referenced by either a published application, an application open to public inspection or an issued patent.
9. A record from this system of records may be disclosed, as a routine use, to a Federal, State, or local law enforcement agency, if the USPTO becomes aware of a violation or potential violation of law or regulation.

PTO/AIA/01 (06-12)
Approved for use through 01/31/2014. OMB 0651-0032
U.S. Patent and Trademark Office; U.S. DEPARTMENT OF COMMERCE
Under the Paperwork Reduction Act of 1995, no persons are required to respond to a collection of information unless it displays a valid OMB control number.

DECLARATION (37 CFR 1.63) FOR UTILITY OR DESIGN APPLICATION USING AN APPLICATION DATA SHEET (37 CFR 1.76)

Title of Invention	GYRATORY CRUSHER MAIN SHAFT AND ASSEMBLY

As the below named inventor, I hereby declare that:

This declaration is directed to:

- [x] The attached application, or
- [ ] United States application or PCT international application number _____ filed on _____.

The above-identified application was made or authorized to be made by me.

I believe that I am the original inventor or an original joint inventor of a claimed invention in the application.

I hereby acknowledge that any willful false statement made in this declaration is punishable under 18 U.S.C. 1001 by fine or imprisonment of not more than five (5) years, or both.

WARNING:

Petitioner/applicant is cautioned to avoid submitting personal information in documents filed in a patent application that may contribute to identity theft. Personal information such as social security numbers, bank account numbers, or credit card numbers (other than a check or credit card authorization form PTO-2038 submitted for payment purposes) is never required by the USPTO to support a petition or an application. If this type of personal information is included in documents submitted to the USPTO, petitioners/applicants should consider redacting such personal information from the documents before submitting them to the USPTO. Petitioner/applicant is advised that the record of a patent application is available to the public after publication of the application (unless a non-publication request in compliance with 37 CFR 1.213(a) is made in the application) or issuance of a patent. Furthermore, the record from an abandoned application may also be available to the public if the application is referenced in a published application or an issued patent (see 37 CFR 1.14). Checks and credit card authorization forms PTO-2038 submitted for payment purposes are not retained in the application file and therefore are not publicly available.

LEGAL NAME OF INVENTOR

Inventor: LARSSON, Mikael M Date (Optional): 2016-04-04

Signature: _____

Note: An application data sheet (PTO/AIA/14 or equivalent), including naming the entire inventive entity, must accompany this form. Use an additional PTO/SB/AIA01 form for each additional inventor.

This collection of information is required by 35 U.S.C. 115 and 37 CFR 1.63. The information is required to obtain or retain a benefit by the public which is to file (and by the USPTO to process) an application. Confidentiality is governed by 35 U.S.C. 122 and 37 CFR 1.11 and 1.14. This collection is estimated to take 1 minute to complete, including gathering, preparing, and submitting the completed application form to the USPTO. Time will vary depending upon the individual case. Any comments on the amount of time you require to complete this form and/or suggestions for reducing this burden, should be sent to the Chief Information Officer, U.S. Patent and Trademark Office, U.S. Department of Commerce, P.O. Box 1450, Alexandria, VA 22313-1450. DO NOT SEND FEES OR COMPLETED FORMS TO THIS ADDRESS. **SEND TO: Commissioner for Patents, P.O. Box 1450, Alexandria, VA 22313-1450.**

If you need assistance in completing the form, call 1-800-PTO-9199 and select option 2.

Privacy Act Statement

The **Privacy Act of 1974 (P.L. 93-579)** requires that you be given certain information in connection with your submission of the attached form related to a patent application or patent. Accordingly, pursuant to the requirements of the Act, please be advised that: (1) the general authority for the collection of this information is 35 U.S.C. 2(b)(2); (2) furnishing of the information solicited is voluntary; and (3) the principal purpose for which the information is used by the U.S. Patent and Trademark Office is to process and/or examine your submission related to a patent application or patent. If you do not furnish the requested information, the U.S. Patent and Trademark Office may not be able to process and/or examine your submission, which may result in termination of proceedings or abandonment of the application or expiration of the patent.

The information provided by you in this form will be subject to the following routine uses:

1. The information on this form will be treated confidentially to the extent allowed under the Freedom of Information Act (5 U.S.C. 552) and the Privacy Act (5 U.S.C 552a). Records from this system of records may be disclosed to the Department of Justice to determine whether disclosure of these records is required by the Freedom of Information Act.
2. A record from this system of records may be disclosed, as a routine use, in the course of presenting evidence to a court, magistrate, or administrative tribunal, including disclosures to opposing counsel in the course of settlement negotiations.
3. A record in this system of records may be disclosed, as a routine use, to a Member of Congress submitting a request involving an individual, to whom the record pertains, when the individual has requested assistance from the Member with respect to the subject matter of the record.
4. A record in this system of records may be disclosed, as a routine use, to a contractor of the Agency having need for the information in order to perform a contract. Recipients of information shall be required to comply with the requirements of the Privacy Act of 1974, as amended, pursuant to 5 U.S.C. 552a(m).
5. A record related to an International Application filed under the Patent Cooperation Treaty in this system of records may be disclosed, as a routine use, to the International Bureau of the World Intellectual Property Organization, pursuant to the Patent Cooperation Treaty.
6. A record in this system of records may be disclosed, as a routine use, to another federal agency for purposes of National Security review (35 U.S.C. 181) and for review pursuant to the Atomic Energy Act (42 U.S.C. 218(c)).
7. A record from this system of records may be disclosed, as a routine use, to the Administrator, General Services, or his/her designee, during an inspection of records conducted by GSA as part of that agency's responsibility to recommend improvements in records management practices and programs, under authority of 44 U.S.C. 2904 and 2906. Such disclosure shall be made in accordance with the GSA regulations governing inspection of records for this purpose, and any other relevant (*i.e.*, GSA or Commerce) directive. Such disclosure shall not be used to make determinations about individuals.
8. A record from this system of records may be disclosed, as a routine use, to the public after either publication of the application pursuant to 35 U.S.C. 122(b) or issuance of a patent pursuant to 35 U.S.C. 151. Further, a record may be disclosed, subject to the limitations of 37 CFR 1.14, as a routine use, to the public if the record was filed in an application which became abandoned or in which the proceedings were terminated and which application is referenced by either a published application, an application open to public inspection or an issued patent.
9. A record from this system of records may be disclosed, as a routine use, to a Federal, State, or local law enforcement agency, if the USPTO becomes aware of a violation or potential violation of law or regulation.

PTO/AIA/01 (06-12)
Approved for use through 01/31/2014. OMB 0651-0032
U.S. Patent and Trademark Office; U.S. DEPARTMENT OF COMMERCE
Under the Paperwork Reduction Act of 1995, no persons are required to respond to a collection of information unless it displays a valid OMB control number.

DECLARATION (37 CFR 1.63) FOR UTILITY OR DESIGN APPLICATION USING AN APPLICATION DATA SHEET (37 CFR 1.76)

Title of Invention	GYRATORY CRUSHER MAIN SHAFT AND ASSEMBLY

As the below named inventor, I hereby declare that:

This declaration is directed to:

- [x] The attached application, or
- [ ] United States application or PCT international application number _____ filed on _____.

The above-identified application was made or authorized to be made by me.

I believe that I am the original inventor or an original joint inventor of a claimed invention in the application.

I hereby acknowledge that any willful false statement made in this declaration is punishable under 18 U.S.C. 1001 by fine or imprisonment of not more than five (5) years, or both.

WARNING:

Petitioner/applicant is cautioned to avoid submitting personal information in documents filed in a patent application that may contribute to identity theft. Personal information such as social security numbers, bank account numbers, or credit card numbers (other than a check or credit card authorization form PTO-2038 submitted for payment purposes) is never required by the USPTO to support a petition or an application. If this type of personal information is included in documents submitted to the USPTO, petitioners/applicants should consider redacting such personal information from the documents before submitting them to the USPTO. Petitioner/applicant is advised that the record of a patent application is available to the public after publication of the application (unless a non-publication request in compliance with 37 CFR 1.213(a) is made in the application) or issuance of a patent. Furthermore, the record from an abandoned application may also be available to the public if the application is referenced in a published application or an issued patent (see 37 CFR 1.14). Checks and credit card authorization forms PTO-2038 submitted for payment purposes are not retained in the application file and therefore are not publicly available.

LEGAL NAME OF INVENTOR

Inventor: NILSSON, Matts-Ake Date (Optional): 20160509

Signature: Matts-Åke Nilsson

Note: An application data sheet (PTO/AIA/14 or equivalent), including naming the entire inventive entity, must accompany this form. Use an additional PTO/SB/AIA01 form for each additional inventor.

This collection of information is required by 35 U.S.C. 115 and 37 CFR 1.63. The information is required to obtain or retain a benefit by the public which is to file (and by the USPTO to process) an application. Confidentiality is governed by 35 U.S.C. 122 and 37 CFR 1.11 and 1.14. This collection is estimated to take 1 minute to complete, including gathering, preparing, and submitting the completed application form to the USPTO. Time will vary depending upon the individual case. Any comments on the amount of time you require to complete this form and/or suggestions for reducing this burden, should be sent to the Chief Information Officer, U.S. Patent and Trademark Office, U.S. Department of Commerce, P.O. Box 1450, Alexandria, VA 22313-1450. DO NOT SEND FEES OR COMPLETED FORMS TO THIS ADDRESS. **SEND TO: Commissioner for Patents, P.O. Box 1450, Alexandria, VA 22313-1450.**

If you need assistance in completing the form, call 1-800-PTO-9199 and select option 2.

PTO/AIA/01 (06-12)
Approved for use through 01/31/2014. OMB 0651-0032
U.S. Patent and Trademark Office, U.S. DEPARTMENT OF COMMERCE
Under the Paperwork Reduction Act of 1995, no persons are required to respond to a collection of information unless it displays a valid OMB control number.

DECLARATION (37 CFR 1.63) FOR UTILITY OR DESIGN APPLICATION USING AN APPLICATION DATA SHEET (37 CFR 1.76)

Title of Invention	GYRATORY CRUSHER MAIN SHAFT AND ASSEMBLY

As the below named inventor, I hereby declare that:

This declaration is directed to:

- [x] The attached application, or
- [ ] United States application or PCT international application number _____

filed on _____.

The above-identified application was made or authorized to be made by me.

I believe that I am the original inventor or an original joint inventor of a claimed invention in the application.

I hereby acknowledge that any willful false statement made in this declaration is punishable under 18 U.S.C. 1001 by fine or imprisonment of not more than five (5) years, or both.

WARNING:

Petitioner/applicant is cautioned to avoid submitting personal information in documents filed in a patent application that may contribute to identity theft. Personal information such as social security numbers, bank account numbers, or credit card numbers (other than a check or credit card authorization form PTO-2038 submitted for payment purposes) is never required by the USPTO to support a petition or an application. If this type of personal information is included in documents submitted to the USPTO, petitioners/applicants should consider redacting such personal information from the documents before submitting them to the USPTO. Petitioner/applicant is advised that the record of a patent application is available to the public after publication of the application (unless a non-publication request in compliance with 37 CFR 1.213(a) is made in the application) or issuance of a patent. Furthermore, the record from an abandoned application may also be available to the public if the application is referenced in a published application or an issued patent (see 37 CFR 1.14). Checks and credit card authorization forms PTO-2038 submitted for payment purposes are not retained in the application file and therefore are not publicly available.

LEGAL NAME OF INVENTOR

Inventor: BERGMAN, Axel Date (Optional): 2016 08 05

Signature: _____

Note: An application data sheet (PTO/AIA/14 or equivalent), including naming the entire inventive entity, must accompany this form. Use an additional PTO/SB/AIA01 form for each additional inventor.

This collection of information is required by 35 U.S.C. 115 and 37 CFR 1.63. The information is required to obtain or retain a benefit by the public which is to file (and by the USPTO to process) an application. Confidentiality is governed by 35 U.S.C. 122 and 37 CFR 1.11 and 1.14. This collection is estimated to take 1 minute to complete, including gathering, preparing, and submitting the completed application form to the USPTO. Time will vary depending upon the individual case. Any comments on the amount of time you require to complete this form and/or suggestions for reducing this burden, should be sent to the Chief Information Officer, U.S. Patent and Trademark Office, U.S. Department of Commerce, P.O. Box 1450, Alexandria, VA 22313-1450. DO NOT SEND FEES OR COMPLETED FORMS TO THIS ADDRESS. **SEND TO: Commissioner for Patents, P.O. Box 1450, Alexandria, VA 22313-1450.**

If you need assistance in completing the form, call 1-800-PTO-9199 and select option 2.

Privacy Act Statement

The **Privacy Act of 1974 (P.L. 93-579)** requires that you be given certain information in connection with your submission of the attached form related to a patent application or patent. Accordingly, pursuant to the requirements of the Act, please be advised that: (1) the general authority for the collection of this information is 35 U.S.C. 2(b)(2); (2) furnishing of the information solicited is voluntary; and (3) the principal purpose for which the information is used by the U.S. Patent and Trademark Office is to process and/or examine your submission related to a patent application or patent. If you do not furnish the requested information, the U.S. Patent and Trademark Office may not be able to process and/or examine your submission, which may result in termination of proceedings or abandonment of the application or expiration of the patent.

The information provided by you in this form will be subject to the following routine uses:

1. The information on this form will be treated confidentially to the extent allowed under the Freedom of Information Act (5 U.S.C. 552) and the Privacy Act (5 U.S.C 552a). Records from this system of records may be disclosed to the Department of Justice to determine whether disclosure of these records is required by the Freedom of Information Act.
2. A record from this system of records may be disclosed, as a routine use, in the course of presenting evidence to a court, magistrate, or administrative tribunal, including disclosures to opposing counsel in the course of settlement negotiations.
3. A record in this system of records may be disclosed, as a routine use, to a Member of Congress submitting a request involving an individual, to whom the record pertains, when the individual has requested assistance from the Member with respect to the subject matter of the record.
4. A record in this system of records may be disclosed, as a routine use, to a contractor of the Agency having need for the information in order to perform a contract. Recipients of information shall be required to comply with the requirements of the Privacy Act of 1974, as amended, pursuant to 5 U.S.C. 552a(m).
5. A record related to an International Application filed under the Patent Cooperation Treaty in this system of records may be disclosed, as a routine use, to the International Bureau of the World Intellectual Property Organization, pursuant to the Patent Cooperation Treaty.
6. A record in this system of records may be disclosed, as a routine use, to another federal agency for purposes of National Security review (35 U.S.C. 181) and for review pursuant to the Atomic Energy Act (42 U.S.C. 218(c)).
7. A record from this system of records may be disclosed, as a routine use, to the Administrator, General Services, or his/her designee, during an inspection of records conducted by GSA as part of that agency's responsibility to recommend improvements in records management practices and programs, under authority of 44 U.S.C. 2904 and 2906. Such disclosure shall be made in accordance with the GSA regulations governing inspection of records for this purpose, and any other relevant (*i.e.*, GSA or Commerce) directive. Such disclosure shall not be used to make determinations about individuals.
8. A record from this system of records may be disclosed, as a routine use, to the public after either publication of the application pursuant to 35 U.S.C. 122(b) or issuance of a patent pursuant to 35 U.S.C. 151. Further, a record may be disclosed, subject to the limitations of 37 CFR 1.14, as a routine use, to the public if the record was filed in an application which became abandoned or in which the proceedings were terminated and which application is referenced by either a published application, an application open to public inspection or an issued patent.
9. A record from this system of records may be disclosed, as a routine use, to a Federal, State, or local law enforcement agency, if the USPTO becomes aware of a violation or potential violation of law or regulation.

PTO/AIA/01 (06-12)
Approved for use through 01/31/2014. OMB 0651-0032
U.S. Patent and Trademark Office, U.S. DEPARTMENT OF COMMERCE
Under the Paperwork Reduction Act of 1995, no persons are required to respond to a collection of information unless it displays a valid OMB control number.

DECLARATION (37 CFR 1.63) FOR UTILITY OR DESIGN APPLICATION USING AN APPLICATION DATA SHEET (37 CFR 1.76)

Title of Invention	GYRATORY CRUSHER MAIN SHAFT AND ASSEMBLY

As the below named inventor, I hereby declare that:

This declaration is directed to:

- [x] The attached application, or
- [ ] United States application or PCT international application number _____ filed on _____.

The above-identified application was made or authorized to be made by me.

I believe that I am the original inventor or an original joint inventor of a claimed invention in the application.

I hereby acknowledge that any willful false statement made in this declaration is punishable under 18 U.S.C. 1001 by fine or imprisonment of not more than five (5) years, or both.

WARNING:

Petitioner/applicant is cautioned to avoid submitting personal information in documents filed in a patent application that may contribute to identity theft. Personal information such as social security numbers, bank account numbers, or credit card numbers (other than a check or credit card authorization form PTO-2038 submitted for payment purposes) is never required by the USPTO to support a petition or an application. If this type of personal information is included in documents submitted to the USPTO, petitioners/applicants should consider redacting such personal information from the documents before submitting them to the USPTO. Petitioner/applicant is advised that the record of a patent application is available to the public after publication of the application (unless a non-publication request in compliance with 37 CFR 1.213(a) is made in the application) or issuance of a patent. Furthermore, the record from an abandoned application may also be available to the public if the application is referenced in a published application or an issued patent (see 37 CFR 1.14). Checks and credit card authorization forms PTO-2038 submitted for payment purposes are not retained in the application file and therefore are not publicly available.

LEGAL NAME OF INVENTOR

Inventor: HALLBERG, Anders Date (Optional): 03-05-2016

Signature: _____

Note: An application data sheet (PTO/AIA/14 or equivalent), including naming the entire inventive entity, must accompany this form. Use an additional PTO/SB/AIA01 form for each additional inventor.

This collection of information is required by 35 U.S.C. 115 and 37 CFR 1.63. The information is required to obtain or retain a benefit by the public which is to file (and by the USPTO to process) an application. Confidentiality is governed by 35 U.S.C. 122 and 37 CFR 1.11 and 1.14. This collection is estimated to take 1 minute to complete, including gathering, preparing, and submitting the completed application form to the USPTO. Time will vary depending upon the individual case. Any comments on the amount of time you require to complete this form and/or suggestions for reducing this burden, should be sent to the Chief Information Officer, U.S. Patent and Trademark Office, U.S. Department of Commerce, P.O. Box 1450, Alexandria, VA 22313-1450. DO NOT SEND FEES OR COMPLETED FORMS TO THIS ADDRESS. **SEND TO: Commissioner for Patents, P.O. Box 1450, Alexandria, VA 22313-1450.**

If you need assistance in completing the form, call 1-800-PTO-9199 and select option 2.

Privacy Act Statement

The **Privacy Act of 1974 (P.L. 93-579)** requires that you be given certain information in connection with your submission of the attached form related to a patent application or patent. Accordingly, pursuant to the requirements of the Act, please be advised that: (1) the general authority for the collection of this information is 35 U.S.C. 2(b)(2); (2) furnishing of the information solicited is voluntary; and (3) the principal purpose for which the information is used by the U.S. Patent and Trademark Office is to process and/or examine your submission related to a patent application or patent. If you do not furnish the requested information, the U.S. Patent and Trademark Office may not be able to process and/or examine your submission, which may result in termination of proceedings or abandonment of the application or expiration of the patent.

The information provided by you in this form will be subject to the following routine uses:

1. The information on this form will be treated confidentially to the extent allowed under the Freedom of Information Act (5 U.S.C. 552) and the Privacy Act (5 U.S.C 552a). Records from this system of records may be disclosed to the Department of Justice to determine whether disclosure of these records is required by the Freedom of Information Act.
2. A record from this system of records may be disclosed, as a routine use, in the course of presenting evidence to a court, magistrate, or administrative tribunal, including disclosures to opposing counsel in the course of settlement negotiations.
3. A record in this system of records may be disclosed, as a routine use, to a Member of Congress submitting a request involving an individual, to whom the record pertains, when the individual has requested assistance from the Member with respect to the subject matter of the record.
4. A record in this system of records may be disclosed, as a routine use, to a contractor of the Agency having need for the information in order to perform a contract. Recipients of information shall be required to comply with the requirements of the Privacy Act of 1974, as amended, pursuant to 5 U.S.C. 552a(m).
5. A record related to an International Application filed under the Patent Cooperation Treaty in this system of records may be disclosed, as a routine use, to the International Bureau of the World Intellectual Property Organization, pursuant to the Patent Cooperation Treaty.
6. A record in this system of records may be disclosed, as a routine use, to another federal agency for purposes of National Security review (35 U.S.C. 181) and for review pursuant to the Atomic Energy Act (42 U.S.C. 218(c)).
7. A record from this system of records may be disclosed, as a routine use, to the Administrator, General Services, or his/her designee, during an inspection of records conducted by GSA as part of that agency's responsibility to recommend improvements in records management practices and programs, under authority of 44 U.S.C. 2904 and 2906. Such disclosure shall be made in accordance with the GSA regulations governing inspection of records for this purpose, and any other relevant (*i.e.*, GSA or Commerce) directive. Such disclosure shall not be used to make determinations about individuals.
8. A record from this system of records may be disclosed, as a routine use, to the public after either publication of the application pursuant to 35 U.S.C. 122(b) or issuance of a patent pursuant to 35 U.S.C. 151. Further, a record may be disclosed, subject to the limitations of 37 CFR 1.14, as a routine use, to the public if the record was filed in an application which became abandoned or in which the proceedings were terminated and which application is referenced by either a published application, an application open to public inspection or an issued patent.
9. A record from this system of records may be disclosed, as a routine use, to a Federal, State, or local law enforcement agency, if the USPTO becomes aware of a violation or potential violation of law or regulation.

PTO/AIA/01 (06-12)
Approved for use through 01/31/2014. OMB 0651-0032
U.S. Patent and Trademark Office; U.S. DEPARTMENT OF COMMERCE
Under the Paperwork Reduction Act of 1995, no persons are required to respond to a collection of information unless it displays a valid OMB control number.

DECLARATION (37 CFR 1.63) FOR UTILITY OR DESIGN APPLICATION USING AN APPLICATION DATA SHEET (37 CFR 1.76)

Title of Invention	GYRATORY CRUSHER MAIN SHAFT AND ASSEMBLY

As the below named inventor, I hereby declare that:

This declaration is directed to:

- [x] The attached application, or
- [ ] United States application or PCT international application number _____ filed on _____.

The above-identified application was made or authorized to be made by me.

I believe that I am the original inventor or an original joint inventor of a claimed invention in the application.

I hereby acknowledge that any willful false statement made in this declaration is punishable under 18 U.S.C. 1001 by fine or imprisonment of not more than five (5) years, or both.

WARNING:

Petitioner/applicant is cautioned to avoid submitting personal information in documents filed in a patent application that may contribute to identity theft. Personal information such as social security numbers, bank account numbers, or credit card numbers (other than a check or credit card authorization form PTO-2038 submitted for payment purposes) is never required by the USPTO to support a petition or an application. If this type of personal information is included in documents submitted to the USPTO, petitioners/applicants should consider redacting such personal information from the documents before submitting them to the USPTO. Petitioner/applicant is advised that the record of a patent application is available to the public after publication of the application (unless a non-publication request in compliance with 37 CFR 1.213(a) is made in the application) or issuance of a patent. Furthermore, the record from an abandoned application may also be available to the public if the application is referenced in a published application or an issued patent (see 37 CFR 1.14). Checks and credit card authorization forms PTO-2038 submitted for payment purposes are not retained in the application file and therefore are not publicly available.

LEGAL NAME OF INVENTOR

Inventor: HOLMBERG, Anne Date (Optional): 2016-05-16

Signature: Anne Holmberg

Note: An application data sheet (PTO/AIA/14 or equivalent), including naming the entire inventive entity, must accompany this form. Use an additional PTO/SB/AIA01 form for each additional inventor.

This collection of information is required by 35 U.S.C. 115 and 37 CFR 1.63. The information is required to obtain or retain a benefit by the public which is to file (and by the USPTO to process) an application. Confidentiality is governed by 35 U.S.C. 122 and 37 CFR 1.11 and 1.14. This collection is estimated to take 1 minute to complete, including gathering, preparing, and submitting the completed application form to the USPTO. Time will vary depending upon the individual case. Any comments on the amount of time you require to complete this form and/or suggestions for reducing this burden, should be sent to the Chief Information Officer, U.S. Patent and Trademark Office, U.S. Department of Commerce, P.O. Box 1450, Alexandria, VA 22313-1450. DO NOT SEND FEES OR COMPLETED FORMS TO THIS ADDRESS. **SEND TO: Commissioner for Patents, P.O. Box 1450, Alexandria, VA 22313-1450.**

If you need assistance in completing the form, call 1-800-PTO-9199 and select option 2.

Privacy Act Statement

The **Privacy Act of 1974 (P.L. 93-579)** requires that you be given certain information in connection with your submission of the attached form related to a patent application or patent. Accordingly, pursuant to the requirements of the Act, please be advised that: (1) the general authority for the collection of this information is 35 U.S.C. 2(b)(2); (2) furnishing of the information solicited is voluntary; and (3) the principal purpose for which the information is used by the U.S. Patent and Trademark Office is to process and/or examine your submission related to a patent application or patent. If you do not furnish the requested information, the U.S. Patent and Trademark Office may not be able to process and/or examine your submission, which may result in termination of proceedings or abandonment of the application or expiration of the patent.

The information provided by you in this form will be subject to the following routine uses:

1. The information on this form will be treated confidentially to the extent allowed under the Freedom of Information Act (5 U.S.C. 552) and the Privacy Act (5 U.S.C 552a). Records from this system of records may be disclosed to the Department of Justice to determine whether disclosure of these records is required by the Freedom of Information Act.
2. A record from this system of records may be disclosed, as a routine use, in the course of presenting evidence to a court, magistrate, or administrative tribunal, including disclosures to opposing counsel in the course of settlement negotiations.
3. A record in this system of records may be disclosed, as a routine use, to a Member of Congress submitting a request involving an individual, to whom the record pertains, when the individual has requested assistance from the Member with respect to the subject matter of the record.
4. A record in this system of records may be disclosed, as a routine use, to a contractor of the Agency having need for the information in order to perform a contract. Recipients of information shall be required to comply with the requirements of the Privacy Act of 1974, as amended, pursuant to 5 U.S.C. 552a(m).
5. A record related to an International Application filed under the Patent Cooperation Treaty in this system of records may be disclosed, as a routine use, to the International Bureau of the World Intellectual Property Organization, pursuant to the Patent Cooperation Treaty.
6. A record in this system of records may be disclosed, as a routine use, to another federal agency for purposes of National Security review (35 U.S.C. 181) and for review pursuant to the Atomic Energy Act (42 U.S.C. 218(c)).
7. A record from this system of records may be disclosed, as a routine use, to the Administrator, General Services, or his/her designee, during an inspection of records conducted by GSA as part of that agency's responsibility to recommend improvements in records management practices and programs, under authority of 44 U.S.C. 2904 and 2906. Such disclosure shall be made in accordance with the GSA regulations governing inspection of records for this purpose, and any other relevant (*i.e.*, GSA or Commerce) directive. Such disclosure shall not be used to make determinations about individuals.
8. A record from this system of records may be disclosed, as a routine use, to the public after either publication of the application pursuant to 35 U.S.C. 122(b) or issuance of a patent pursuant to 35 U.S.C. 151. Further, a record may be disclosed, subject to the limitations of 37 CFR 1.14, as a routine use, to the public if the record was filed in an application which became abandoned or in which the proceedings were terminated and which application is referenced by either a published application, an application open to public inspection or an issued patent.
9. A record from this system of records may be disclosed, as a routine use, to a Federal, State, or local law enforcement agency, if the USPTO becomes aware of a violation or potential violation of law or regulation.

PTO/AIA/01 (06-12)
Approved for use through 01/31/2014. OMB 0651-0032
U.S. Patent and Trademark Office; U.S. DEPARTMENT OF COMMERCE
Under the Paperwork Reduction Act of 1995, no persons are required to respond to a collection of information unless it displays a valid OMB control number.

DECLARATION (37 CFR 1.63) FOR UTILITY OR DESIGN APPLICATION USING AN APPLICATION DATA SHEET (37 CFR 1.76)

Title of Invention	GYRATORY CRUSHER MAIN SHAFT AND ASSEMBLY

As the below named inventor, I hereby declare that:

This declaration is directed to:

- [x] The attached application, or
- [ ] United States application or PCT international application number _____ filed on _____.

The above-identified application was made or authorized to be made by me.

I believe that I am the original inventor or an original joint inventor of a claimed invention in the application.

I hereby acknowledge that any willful false statement made in this declaration is punishable under 18 U.S.C. 1001 by fine or imprisonment of not more than five (5) years, or both.

WARNING:

Petitioner/applicant is cautioned to avoid submitting personal information in documents filed in a patent application that may contribute to identity theft. Personal information such as social security numbers, bank account numbers, or credit card numbers (other than a check or credit card authorization form PTO-2036 submitted for payment purposes) is never required by the USPTO to support a petition or an application. If this type of personal information is included in documents submitted to the USPTO, petitioners/applicants should consider redacting such personal information from the documents before submitting them to the USPTO. Petitioner/applicant is advised that the record of a patent application is available to the public after publication of the application (unless a non-publication request in compliance with 37 CFR 1.213(a) is made in the application) or issuance of a patent. Furthermore, the record from an abandoned application may also be available to the public if the application is referenced in a published application or an issued patent (see 37 CFR 1.14). Checks and credit card authorization forms PTO-2038 submitted for payment purposes are not retained in the application file and therefore are not publicly available.

LEGAL NAME OF INVENTOR

Inventor: ERIKSSON, Bengt-Arne Date (Optional) 2016-05-12

Signature: Bengt-Arne Eriksson

Note: An application data sheet (PTO/AIA/14 or equivalent), including naming the entire inventive entity, must accompany this form. Use an additional PTO/SB/AIA01 form for each additional inventor.

This collection of information is required by 35 U.S.C. 115 and 37 CFR 1.63. The information is required to obtain or retain a benefit by the public which is to file (and by the USPTO to process) an application. Confidentiality is governed by 35 U.S.C. 122 and 37 CFR 1.11 and 1.14. This collection is estimated to take 1 minute to complete, including gathering, preparing, and submitting the completed application form to the USPTO. Time will vary depending upon the individual case. Any comments on the amount of time you require to complete this form and/or suggestions for reducing this burden, should be sent to the Chief Information Officer, U.S. Patent and Trademark Office, U.S. Department of Commerce, P.O. Box 1450, Alexandria, VA 22313-1450. DO NOT SEND FEES OR COMPLETED FORMS TO THIS ADDRESS. **SEND TO: Commissioner for Patents, P.O. Box 1450, Alexandria, VA 22313-1450.**

If you need assistance in completing the form, call 1-800-PTO-9199 and select option 2.

Privacy Act Statement

The **Privacy Act of 1974 (P.L. 93-579)** requires that you be given certain information in connection with your submission of the attached form related to a patent application or patent. Accordingly, pursuant to the requirements of the Act, please be advised that: (1) the general authority for the collection of this information is 35 U.S.C. 2(b)(2); (2) furnishing of the information solicited is voluntary; and (3) the principal purpose for which the information is used by the U.S. Patent and Trademark Office is to process and/or examine your submission related to a patent application or patent. If you do not furnish the requested information, the U.S. Patent and Trademark Office may not be able to process and/or examine your submission, which may result in termination of proceedings or abandonment of the application or expiration of the patent.

The information provided by you in this form will be subject to the following routine uses:

1. The information on this form will be treated confidentially to the extent allowed under the Freedom of Information Act (5 U.S.C. 552) and the Privacy Act (5 U.S.C 552a). Records from this system of records may be disclosed to the Department of Justice to determine whether disclosure of these records is required by the Freedom of Information Act.
2. A record from this system of records may be disclosed, as a routine use, in the course of presenting evidence to a court, magistrate, or administrative tribunal, including disclosures to opposing counsel in the course of settlement negotiations.
3. A record in this system of records may be disclosed, as a routine use, to a Member of Congress submitting a request involving an individual, to whom the record pertains, when the individual has requested assistance from the Member with respect to the subject matter of the record.
4. A record in this system of records may be disclosed, as a routine use, to a contractor of the Agency having need for the information in order to perform a contract. Recipients of information shall be required to comply with the requirements of the Privacy Act of 1974, as amended, pursuant to 5 U.S.C. 552a(m).
5. A record related to an International Application filed under the Patent Cooperation Treaty in this system of records may be disclosed, as a routine use, to the International Bureau of the World Intellectual Property Organization, pursuant to the Patent Cooperation Treaty.
6. A record in this system of records may be disclosed, as a routine use, to another federal agency for purposes of National Security review (35 U.S.C. 181) and for review pursuant to the Atomic Energy Act (42 U.S.C. 218(c)).
7. A record from this system of records may be disclosed, as a routine use, to the Administrator, General Services, or his/her designee, during an inspection of records conducted by GSA as part of that agency's responsibility to recommend improvements in records management practices and programs, under authority of 44 U.S.C. 2904 and 2906. Such disclosure shall be made in accordance with the GSA regulations governing inspection of records for this purpose, and any other relevant (*i.e.*, GSA or Commerce) directive. Such disclosure shall not be used to make determinations about individuals.
8. A record from this system of records may be disclosed, as a routine use, to the public after either publication of the application pursuant to 35 U.S.C. 122(b) or issuance of a patent pursuant to 35 U.S.C. 151. Further, a record may be disclosed, subject to the limitations of 37 CFR 1.14, as a routine use, to the public if the record was filed in an application which became abandoned or in which the proceedings were terminated and which application is referenced by either a published application, an application open to public inspection or an issued patent.
9. A record from this system of records may be disclosed, as a routine use, to a Federal, State, or local law enforcement agency, if the USPTO becomes aware of a violation or potential violation of law or regulation.

UNITED STATES PATENT AND TRADEMARK OFFICE

UNITED STATES DEPARTMENT OF COMMERCE
United States Patent and Trademark Office
Address: COMMISSIONER FOR PATENTS
P.O. Box 1450
Alexandria, Virginia 22313-1450
www.uspto.gov

APPLICATION NUMBER	FILING or 371(c) DATE	GRP ART UNIT	FIL FEE REC'D	ATTY.DOCKET.NO	TOT CLAIMS	IND CLAIMS
15/035,774	05/11/2016	3725	1620	SC 14208WOUS	14	1

CONFIRMATION NO. 3999

UPDATED FILING RECEIPT

78686
Sandvik/Diamond Innovations
6325 Huntley Road
Worthington, OH 43085

OC000000085227020

Date Mailed: 08/22/2016

Receipt is acknowledged of this non-provisional patent application. The application will be taken up for examination in due course. Applicant will be notified as to the results of the examination. Any correspondence concerning the application must include the following identification information: the U.S. APPLICATION NUMBER, FILING DATE, NAME OF APPLICANT, and TITLE OF INVENTION. Fees transmitted by check or draft are subject to collection. Please verify the accuracy of the data presented on this receipt. **If an error is noted on this Filing Receipt, please submit a written request for a Filing Receipt Correction. Please provide a copy of this Filing Receipt with the changes noted thereon. If you received a "Notice to File Missing Parts" for this application, please submit any corrections to this Filing Receipt with your reply to the Notice. When the USPTO processes the reply to the Notice, the USPTO will generate another Filing Receipt incorporating the requested corrections**

Inventor(s)

Axel BERGMAN, Malmo, SWEDEN;
Mikael M LARSSON, Eslov, SWEDEN;
Patric MALMQVIST, Svedala, SWEDEN;
Anders HALLBERG, Sodra Sandby, SWEDEN;
Matts-Ake NILSSON, Gards Kopinge, SWEDEN;
Fredrik ERIKSSON, Malmo, SWEDEN;
Bengt-Arne ERIKSSON, Svedala, SWEDEN;
Anne HOLOMBERG, Loddekopinge, SWEDEN;

Applicant(s)

SANDVIK INTELECTUAL PROPERTY AB, Sandviken, SWEDEN;

Power of Attorney: None

Domestic Priority data as claimed by applicant

This application is a 371 of PCT/EP2014/060594 05/23/2014

Foreign Applications (You may be eligible to benefit from the **Patent Prosecution Highway** program at the USPTO. Please see http://www.uspto.gov for more information.)
EUROPEAN PATENT OFFICE (EPO) 13192402.9 11/12/2013

Permission to Access Application via Priority Document Exchange: Yes

Permission to Access Search Results: No

Applicant may provide or rescind an authorization for access using Form PTO/SB/39 or Form PTO/SB/69 as appropriate.

If Required, Foreign Filing License Granted: 06/11/2016

The country code and number of your priority application, to be used for filing abroad under the Paris Convention, is **US 15/035,774**

Projected Publication Date: 09/22/2016

Non-Publication Request: No

Early Publication Request: No

Title

GYRATORY CRUSHER MAIN SHAFT AND ASSEMBLY

Preliminary Class

241

Statement under 37 CFR 1.55 or 1.78 for AIA (First Inventor to File) Transition Applications: No

PROTECTING YOUR INVENTION OUTSIDE THE UNITED STATES

Since the rights granted by a U.S. patent extend only throughout the territory of the United States and have no effect in a foreign country, an inventor who wishes patent protection in another country must apply for a patent in a specific country or in regional patent offices. Applicants may wish to consider the filing of an international application under the Patent Cooperation Treaty (PCT). An international (PCT) application generally has the same effect as a regular national patent application in each PCT-member country. The PCT process **simplifies** the filing of patent applications on the same invention in member countries, but **does not result** in a grant of "an international patent" and does not eliminate the need of applicants to file additional documents and fees in countries where patent protection is desired.

Almost every country has its own patent law, and a person desiring a patent in a particular country must make an application for patent in that country in accordance with its particular laws. Since the laws of many countries differ in various respects from the patent law of the United States, applicants are advised to seek guidance from specific foreign countries to ensure that patent rights are not lost prematurely.

Applicants also are advised that in the case of inventions made in the United States, the Director of the USPTO must issue a license before applicants can apply for a patent in a foreign country. The filing of a U.S. patent application serves as a request for a foreign filing license. The application's filing receipt contains further information and guidance as to the status of applicant's license for foreign filing.

Applicants may wish to consult the USPTO booklet, "General Information Concerning Patents" (specifically, the section entitled "Treaties and Foreign Patents") for more information on timeframes and deadlines for filing foreign patent applications. The guide is available either by contacting the USPTO Contact Center at 800-786-9199, or it can be viewed on the USPTO website at http://www.uspto.gov/web/offices/pac/doc/general/index.html.

For information on preventing theft of your intellectual property (patents, trademarks and copyrights), you may wish to consult the U.S. Government website, http://www.stopfakes.gov. Part of a Department of Commerce initiative, this website includes self-help "toolkits" giving innovators guidance on how to protect intellectual property in specific

countries such as China, Korea and Mexico. For questions regarding patent enforcement issues, applicants may call the U.S. Government hotline at 1-866-999-HALT (1-866-999-4258).

LICENSE FOR FOREIGN FILING UNDER

Title 35, United States Code, Section 184

Title 37, Code of Federal Regulations, 5.11 & 5.15

GRANTED

The applicant has been granted a license under 35 U.S.C. 184, if the phrase "IF REQUIRED, FOREIGN FILING LICENSE GRANTED" followed by a date appears on this form. Such licenses are issued in all applications where the conditions for issuance of a license have been met, regardless of whether or not a license may be required as set forth in 37 CFR 5.15. The scope and limitations of this license are set forth in 37 CFR 5.15(a) unless an earlier license has been issued under 37 CFR 5.15(b). The license is subject to revocation upon written notification. The date indicated is the effective date of the license, unless an earlier license of similar scope has been granted under 37 CFR 5.13 or 5.14.

This license is to be retained by the licensee and may be used at any time on or after the effective date thereof unless it is revoked. This license is automatically transferred to any related applications(s) filed under 37 CFR 1.53(d). This license is not retroactive.

The grant of a license does not in any way lessen the responsibility of a licensee for the security of the subject matter as imposed by any Government contract or the provisions of existing laws relating to espionage and the national security or the export of technical data. Licensees should apprise themselves of current regulations especially with respect to certain countries, of other agencies, particularly the Office of Defense Trade Controls, Department of State (with respect to Arms, Munitions and Implements of War (22 CFR 121-128)); the Bureau of Industry and Security, Department of Commerce (15 CFR parts 730-774); the Office of Foreign AssetsControl, Department of Treasury (31 CFR Parts 500+) and the Department of Energy.

NOT GRANTED

No license under 35 U.S.C. 184 has been granted at this time, if the phrase "IF REQUIRED, FOREIGN FILING LICENSE GRANTED" DOES NOT appear on this form. Applicant may still petition for a license under 37 CFR 5.12, if a license is desired before the expiration of 6 months from the filing date of the application. If 6 months has lapsed from the filing date of this application and the licensee has not received any indication of a secrecy order under 35 U.S.C. 181, the licensee may foreign file the application pursuant to 37 CFR 5.15(b).

SelectUSA

The United States represents the largest, most dynamic marketplace in the world and is an unparalleled location for business investment, innovation, and commercialization of new technologies. The U.S. offers tremendous resources and advantages for those who invest and manufacture goods here. Through SelectUSA, our nation works to promote and facilitate business investment. SelectUSA provides information assistance to the international investor community; serves as an ombudsman for existing and potential investors; advocates on behalf of U.S. cities, states, and regions competing for global investment; and counsels U.S. economic development organizations on investment attraction best practices. To learn more about why the United States is the best country in the world to develop

technology, manufacture products, deliver services, and grow your business, visit http://www.SelectUSA.gov or call +1-202-482-6800.

UNITED STATES PATENT AND TRADEMARK OFFICE

UNITED STATES DEPARTMENT OF COMMERCE
United States Patent and Trademark Office
Address: COMMISSIONER FOR PATENTS
P.O. Box 1450
Alexandria, Virginia 22313-1450
www.uspto.gov

U.S. APPLICATION NUMBER NO.	FIRST NAMED INVENTOR	ATTY. DOCKET NO.
15/035,774	Axel BERGMAN	SC 14208WOUS

78686
Sandvik/Diamond Innovations
6325 Huntley Road
Worthington, OH 43085

INTERNATIONAL APPLICATION NO.	
PCT/EP2014/060594	
I.A. FILING DATE	PRIORITY DATE
05/23/2014	11/12/2013

CONFIRMATION NO. 3999
371 ACCEPTANCE LETTER

OC000000085227021

Date Mailed: 08/22/2016

NOTICE OF ACCEPTANCE OF APPLICATION UNDER 35 U.S.C 371 AND 37 CFR 1.495

The applicant is hereby advised that the United States Patent and Trademark Office, in its capacity as a Designated / Elected Office (37 CFR 1.495), has ACCEPTED the above identified international application for national patentability examination in the United States Patent and Trademark Office.

The United States Application Number assigned to the application is shown above. A Filing Receipt will be issued for the present application in due course. **THE DATE APPEARING ON THE FILING RECEIPT AS THE "FILING DATE or 371(c) DATE" IS THE DATE ON WHICH THE LAST OF THE 35 U.S.C. 371 (c)(1) and (c)(2) REQUIREMENTS HAS BEEN RECEIVED IN THE OFFICE. THIS DATE IS SHOWN BELOW.** The filing date of the above identified application is the international filing date of the international application (Article 11(3) and 35 U.S.C. 363)

05/11/2016
DATE OF RECEIPT OF 35 U.S.C.
371(c)(1) and (c)(2) REQUIREMENTS

The following items have been received:

- Copy of the International Application filed on 05/11/2016
- Copy of the International Search Report filed on 05/11/2016
- Preliminary Amendments filed on 05/11/2016
- Information Disclosure Statements filed on 05/11/2016
- Inventor's Oath or Declaration filed on 07/13/2016
- Request for Immediate Examination filed on 05/11/2016
- U.S. Basic National Fees filed on 05/11/2016
- Priority Documents filed on 05/11/2016
- Power of Attorney filed on 05/11/2016
- Specification filed on 05/11/2016
- Claims filed on 05/11/2016
- Abstracts filed on 05/11/2016
- Drawings filed on 05/11/2016
- Authorization to Permit Access filed on 05/11/2016
- Application Data Sheet (37 CFR 1.76) filed on 05/11/2016

Applicant is reminded that any communications to the United States Patent and Trademark Office must be mailed to the address given in the heading and include the U.S. application no. shown above (37 CFR 1.5)

DEBORAH D WILLIAMS

Telephone: (571) 272-0466

PATENT APPLICATION FEE DETERMINATION RECORD

Substitute for Form PTO-875

Application or Docket Number: 15/035,774

APPLICATION AS FILED - PART I

FOR	(Column 1) NUMBER FILED	(Column 2) NUMBER EXTRA	SMALL ENTITY RATE($)	SMALL ENTITY FEE($)	OR	OTHER THAN SMALL ENTITY RATE($)	OTHER THAN SMALL ENTITY FEE($)
BASIC FEE (37 CFR 1.16(a), (b), or (c))	N/A	N/A	N/A			N/A	280
SEARCH FEE (37 CFR 1.16(k), (i), or (m))	N/A	N/A	N/A			N/A	480
EXAMINATION FEE (37 CFR 1.16(o), (p), or (q))	N/A	N/A	N/A			N/A	720
TOTAL CLAIMS (37 CFR 1.16(i))	14 minus 20 =	*			OR	x 80 =	0.00
INDEPENDENT CLAIMS (37 CFR 1.16(h))	1 minus 3 =	*				x 420 =	0.00
APPLICATION SIZE FEE (37 CFR 1.16(s))	If the specification and drawings exceed 100 sheets of paper, the application size fee due is $310 ($155 for small entity) for each additional 50 sheets or fraction thereof. See 35 U.S.C. 41(a)(1)(G) and 37 CFR 1.16(s).						0.00
MULTIPLE DEPENDENT CLAIM PRESENT (37 CFR 1.16(j))							0.00
* If the difference in column 1 is less than zero, enter "0" in column 2.			TOTAL			TOTAL	1480

APPLICATION AS AMENDED - PART II

		(Column 1) CLAIMS REMAINING AFTER AMENDMENT		(Column 2) HIGHEST NUMBER PREVIOUSLY PAID FOR	(Column 3) PRESENT EXTRA	SMALL ENTITY RATE($)	SMALL ENTITY ADDITIONAL FEE($)	OR	OTHER THAN SMALL ENTITY RATE($)	OTHER THAN SMALL ENTITY ADDITIONAL FEE($)
AMENDMENT A	Total (37 CFR 1.16(i))	*	Minus	**	=	x =		OR	x =	
	Independent (37 CFR 1.16(h))	*	Minus	***	=	x =		OR	x =	
	Application Size Fee (37 CFR 1.16(s))									
	FIRST PRESENTATION OF MULTIPLE DEPENDENT CLAIM (37 CFR 1.16(j))							OR		
						TOTAL ADD'L FEE		OR	TOTAL ADD'L FEE	

		(Column 1) CLAIMS REMAINING AFTER AMENDMENT		(Column 2) HIGHEST NUMBER PREVIOUSLY PAID FOR	(Column 3) PRESENT EXTRA	SMALL ENTITY RATE($)	SMALL ENTITY ADDITIONAL FEE($)	OR	OTHER THAN SMALL ENTITY RATE($)	OTHER THAN SMALL ENTITY ADDITIONAL FEE($)
AMENDMENT B	Total (37 CFR 1.16(i))	*	Minus	**	=	x =		OR	x =	
	Independent (37 CFR 1.16(h))	*	Minus	***	=	x =		OR	x =	
	Application Size Fee (37 CFR 1.16(s))									
	FIRST PRESENTATION OF MULTIPLE DEPENDENT CLAIM (37 CFR 1.16(j))							OR		
						TOTAL ADD'L FEE		OR	TOTAL ADD'L FEE	

* If the entry in column 1 is less than the entry in column 2, write "0" in column 3.

** If the "Highest Number Previously Paid For" IN THIS SPACE is less than 20, enter "20".

*** If the "Highest Number Previously Paid For" IN THIS SPACE is less than 3, enter "3".

The "Highest Number Previously Paid For" (Total or Independent) is the highest found in the appropriate box in column 1.

UNITED STATES PATENT AND TRADEMARK OFFICE

UNITED STATES DEPARTMENT OF COMMERCE
United States Patent and Trademark Office
Address: COMMISSIONER FOR PATENTS
P.O. Box 1450
Alexandria, Virginia 22313-1450
www.uspto.gov

APPLICATION NUMBER	FILING OR 371(C) DATE	FIRST NAMED APPLICANT	ATTY. DOCKET NO./TITLE
15/035,774	05/11/2016	Axel BERGMAN	SC 14208WOUS

CONFIRMATION NO. 3999

78686
Sandvik/Diamond Innovations
6325 Huntley Road
Worthington, OH 43085

PUBLICATION NOTICE

OC00000085975004

Title:GYRATORY CRUSHER MAIN SHAFT AND ASSEMBLY

Publication No.US-2016-0271614-A1
Publication Date:09/22/2016

NOTICE OF PUBLICATION OF APPLICATION

The above-identified application will be electronically published as a patent application publication pursuant to 37 CFR 1.211, et seq. The patent application publication number and publication date are set forth above.

The publication may be accessed through the USPTO's publically available Searchable Databases via the Internet at www.uspto.gov. The direct link to access the publication is currently http://www.uspto.gov/patft/.

The publication process established by the Office does not provide for mailing a copy of the publication to applicant. A copy of the publication may be obtained from the Office upon payment of the appropriate fee set forth in 37 CFR 1.19(a)(1). Orders for copies of patent application publications are handled by the USPTO's Office of Public Records. The Office of Public Records can be reached by telephone at (703) 308-9726 or (800) 972-6382, by facsimile at (703) 305-8759, by mail addressed to the United States Patent and Trademark Office, Office of Public Records, Alexandria, VA 22313-1450 or via the Internet.

In addition, information on the status of the application, including the mailing date of Office actions and the dates of receipt of correspondence filed in the Office, may also be accessed via the Internet through the Patent Electronic Business Center at www.uspto.gov using the public side of the Patent Application Information and Retrieval (PAIR) system. The direct link to access this status information is currently http://pair.uspto.gov/. Prior to publication, such status information is confidential and may only be obtained by applicant using the private side of PAIR.

Further assistance in electronically accessing the publication, or about PAIR, is available by calling the Patent Electronic Business Center at 1-866-217-9197.

Office of Data Managment, Application Assistance Unit (571) 272-4000, or (571) 272-4200, or 1-888-786-0101

PTO/SB/08a (01-10)
Approved for use through 07/31/2012. OMB 0651-0031
U.S. Patent and Trademark Office; U.S. DEPARTMENT OF COMMERCE
Under the Paperwork Reduction Act of 1995, no persons are required to respond to a collection of information unless it contains a valid OMB control number.

INFORMATION DISCLOSURE STATEMENT BY APPLICANT

(Not for submission under 37 CFR 1.99)

Application Number	15035774
Filing Date	2014-05-23
First Named Inventor	ERIKSSON
Art Unit	
Examiner Name	
Attorney Docket Number	SMRT 14208WOUS

U.S.PATENTS Remove

Examiner Initial*	Cite No	Patent Number	Kind Code[1]	Issue Date	Name of Patentee or Applicant of cited Document	Pages,Columns,Lines where Relevant Passages or Relevant Figures Appear
	1					

If you wish to add additional U.S. Patent citation information please click the Add button. Add

U.S.PATENT APPLICATION PUBLICATIONS Remove

Examiner Initial*	Cite No	Publication Number	Kind Code[1]	Publication Date	Name of Patentee or Applicant of cited Document	Pages,Columns,Lines where Relevant Passages or Relevant Figures Appear
	1	20030102394	A1	2003-06-05	MARTINEZ ET AL	
	2					

If you wish to add additional U.S. Published Application citation information please click the Add button. Add

FOREIGN PATENT DOCUMENTS Remove

Examiner Initial*	Cite No	Foreign Document Number[3]	Country Code[2] i	Kind Code[4]	Publication Date	Name of Patentee or Applicant of cited Document	Pages,Columns,Lines where Relevant Passages or Relevant Figures Appear	T[5]
	1	201179454	CN	Y	2009-01-14	SHAOGUAN CITY		☒
	2	201431896	CN	Y	2010-03-31	JIANGUO ET AL		☒

INFORMATION DISCLOSURE STATEMENT BY APPLICANT (Not for submission under 37 CFR 1.99)		
	Application Number	15035774
	Filing Date	2014-05-23
	First Named Inventor	ERIKSSON
	Art Unit	
	Examiner Name	
	Attorney Docket Number	SMRT 14208WOUS

	3	201807388	CN	U	2011-04-27	CHEN		☒
	4	203170383	CN	U	2013-09-07	XIANBIN		☒

If you wish to add additional Foreign Patent Document citation information please click the Add button Add

NON-PATENT LITERATURE DOCUMENTS Remove

Examiner Initials*	Cite No	Include name of the author (in CAPITAL LETTERS), title of the article (when appropriate), title of the item (book, magazine, journal, serial, symposium, catalog, etc), date, pages(s), volume-issue number(s), publisher, city and/or country where published.	T[5]
	1		

If you wish to add additional non-patent literature document citation information please click the Add button Add

EXAMINER SIGNATURE

Examiner Signature		Date Considered	

*EXAMINER: Initial if reference considered, whether or not citation is in conformance with MPEP 609. Draw line through a citation if not in conformance and not considered. Include copy of this form with next communication to applicant.

[1] See Kind Codes of USPTO Patent Documents at www.USPTO.GOV or MPEP 901.04. [2] Enter office that issued the document, by the two-letter code (WIPO Standard ST.3). [3] For Japanese patent documents, the indication of the year of the reign of the Emperor must precede the serial number of the patent document. [4] Kind of document by the appropriate symbols as indicated on the document under WIPO Standard ST.16 if possible. [5] Applicant is to place a check mark here if English language translation is attached.

INFORMATION DISCLOSURE STATEMENT BY APPLICANT

(Not for submission under 37 CFR 1.99)

Application Number	15035774
Filing Date	2014-05-23
First Named Inventor	ERIKSSON
Art Unit	
Examiner Name	
Attorney Docket Number	SMRT 14208WOUS

CERTIFICATION STATEMENT

Please see 37 CFR 1.97 and 1.98 to make the appropriate selection(s):

☒ That each item of information contained in the information disclosure statement was first cited in any communication from a foreign patent office in a counterpart foreign application not more than three months prior to the filing of the information disclosure statement. See 37 CFR 1.97(e)(1).

OR

☐ That no item of information contained in the information disclosure statement was cited in a communication from a foreign patent office in a counterpart foreign application, and, to the knowledge of the person signing the certification after making reasonable inquiry, no item of information contained in the information disclosure statement was known to any individual designated in 37 CFR 1.56(c) more than three months prior to the filing of the information disclosure statement. See 37 CFR 1.97(e)(2).

See attached certification statement.

The fee set forth in 37 CFR 1.17 (p) has been submitted herewith.

A certification statement is not submitted herewith.

SIGNATURE

A signature of the applicant or representative is required in accordance with CFR 1.33, 10.18. Please see CFR 1.4(d) for the form of the signature.

Signature	/Corinne Gorski/	Date (YYYY-MM-DD)	2017-12-22
Name/Print	Corinne Gorski	Registration Number	34339

This collection of information is required by 37 CFR 1.97 and 1.98. The information is required to obtain or retain a benefit by the public which is to file (and by the USPTO to process) an application. Confidentiality is governed by 35 U.S.C. 122 and 37 CFR 1.14. This collection is estimated to take 1 hour to complete, including gathering, preparing and submitting the completed application form to the USPTO. Time will vary depending upon the individual case. Any comments on the amount of time you require to complete this form and/or suggestions for reducing this burden, should be sent to the Chief Information Officer, U.S. Patent and Trademark Office, U.S. Department of Commerce, P.O. Box 1450, Alexandria, VA 22313-1450. DO NOT SEND FEES OR COMPLETED FORMS TO THIS ADDRESS. **SEND TO: Commissioner for Patents, P.O. Box 1450, Alexandria, VA 22313-1450.**

Privacy Act Statement

The Privacy Act of 1974 (P.L. 93-579) requires that you be given certain information in connection with your submission of the attached form related to a patent application or patent. Accordingly, pursuant to the requirements of the Act, please be advised that: (1) the general authority for the collection of this information is 35 U.S.C. 2(b)(2); (2) furnishing of the information solicited is voluntary; and (3) the principal purpose for which the information is used by the U.S. Patent and Trademark Office is to process and/or examine your submission related to a patent application or patent. If you do not furnish the requested information, the U.S. Patent and Trademark Office may not be able to process and/or examine your submission, which may result in termination of proceedings or abandonment of the application or expiration of the patent.

The information provided by you in this form will be subject to the following routine uses:

1. The information on this form will be treated confidentially to the extent allowed under the Freedom of Information Act (5 U.S.C. 552) and the Privacy Act (5 U.S.C. 552a). Records from this system of records may be disclosed to the Department of Justice to determine whether the Freedom of Information Act requires disclosure of these record s.

2. A record from this system of records may be disclosed, as a routine use, in the course of presenting evidence to a court, magistrate, or administrative tribunal, including disclosures to opposing counsel in the course of settlement negotiations.

3. A record in this system of records may be disclosed, as a routine use, to a Member of Congress submitting a request involving an individual, to whom the record pertains, when the individual has requested assistance from the Member with respect to the subject matter of the record.

4. A record in this system of records may be disclosed, as a routine use, to a contractor of the Agency having need for the information in order to perform a contract. Recipients of information shall be required to comply with the requirements of the Privacy Act of 1974, as amended, pursuant to 5 U.S.C. 552a(m).

5. A record related to an International Application filed under the Patent Cooperation Treaty in this system of records may be disclosed, as a routine use, to the International Bureau of the World Intellectual Property Organization, pursuant to the Patent Cooperation Treaty.

6. A record in this system of records may be disclosed, as a routine use, to another federal agency for purposes of National Security review (35 U.S.C. 181) and for review pursuant to the Atomic Energy Act (42 U.S.C. 218(c)).

7. A record from this system of records may be disclosed, as a routine use, to the Administrator, General Services, or his/her designee, during an inspection of records conducted by GSA as part of that agency's responsibility to recommend improvements in records management practices and programs, under authority of 44 U.S.C. 2904 and 2906. Such disclosure shall be made in accordance with the GSA regulations governing inspection of records for this purpose, and any other relevant (i.e., GSA or Commerce) directive. Such disclosure shall not be used to make determinations about individuals.

8. A record from this system of records may be disclosed, as a routine use, to the public after either publication of the application pursuant to 35 U.S.C. 122(b) or issuance of a patent pursuant to 35 U.S.C. 151. Further, a record may be disclosed, subject to the limitations of 37 CFR 1.14, as a routine use, to the public if the record was filed in an application which became abandoned or in which the proceedings were terminated and which application is referenced by either a published application, an application open to public inspections or an issued patent.

9. A record from this system of records may be disclosed, as a routine use, to a Federal, State, or local law enforcement agency, if the USPTO becomes aware of a violation or potential violation of law or regulation.

Espacenet

Bibliographic data: CN201179454 (Y) — 2009-01-14

Cone crusher

Inventor(s): ZHIXIONG HUANG [CN] ± (HUANG ZHIXIONG)

Applicant(s): SHAOGUAN CITY SHAORUI HEAVY IN [CN] ± (SHAOGUAN CITY SHAORUI HEAVY INDUSTRIES CO., LTD)

Classification: **- international:** ***B02C2/06***
- cooperative:

Application number: CN2008252700U 20080331

Priority number (s): CN2008252700U 20080331

Abstract of CN201179454 (Y)

The utility model relates to a spindle breaker which comprises a stander and a main shaft. The center of the lower part of the stander is provided with an eccentric sleeve, the upper part of the eccentric sleeve is provided with a large conical gear, the middle part of the stander is provided with a bowl-shaped bearing bracket stand, a conical body is fixedly installed at the upper end of the main shaft and arranged on the bowl-shaped bearing bracket stand, the lower end of the main shaft penetrates through the bowl-shaped bearing bracket stand to be inserted in the eccentric sleeve, a breaking wall is fixedly arranged on the conical body, a rolling mortar wall is arranged at the inner side of an adjusting sleeve to form a fixed cone, and a small conical gear engaged with the large conical gear is dynamically connected with an electric motor through a transmission shaft and a shaft joint. With dry oil sealing, the bowl-shaped bearing bracket stand is fixed on the stander, the sealing is convenient, and the effect is reliable; with a special stander lining, kirksite can not loose after poured, the stander lining can not move upwards, and the use is safe and reliable; the structural strength of machine members is high, the service life is long, the hunting frequency is high, and the production efficiency is higher than that of the traditional machine by over ten percent.

[19] 中华人民共和国国家知识产权局

[51] Int. Cl.
B02C 2/06 (2006.01)

[12] 实用新型专利说明书

专利号 ZL 200820052700.5

[45] 授权公告日 2009 年 1 月 14 日

[11] 授权公告号 CN 201179454Y

[22] 申请日 2008.3.31

[21] 申请号 200820052700.5

[73] 专利权人 韶关市韶瑞重工有限公司

地址 512029 广东省韶关市西郊武江科技工业园

[72] 发明人 黄志雄

[74] 专利代理机构 韶关市雷门专利事务所

代理人 周胜明

权利要求书 1 页 说明书 3 页 附图 1 页

[54] 实用新型名称

圆锥破碎机

[57] 摘要

本实用新型涉及一种圆锥破碎机，包括机架和主轴，机架下部正中央装有偏心轴套，偏心轴套上部安装大圆锥齿轮，机架中部装有碗形轴承架，圆锥躯体固装在主轴上端并坐在碗形轴承架上，主轴下端穿过碗形轴承架后插在偏心轴套内，破碎壁固装在圆锥躯体上，轧臼壁置于调整套内侧形成定锥，而与大圆锥齿轮相啮合的小圆锥齿轮则通过传动轴和联轴器与电动机动力相连。 采用干油密封，碗形轴承架固定在机架上，密封方便，效果可靠；采用特制机架衬套，浇注锌合金后，锌合金不会松动，机架衬套不会上窜，使用安全可靠；机件结构强度高，使用寿命长；摆动频率较高，生产效率较传统机型高 10％以上。

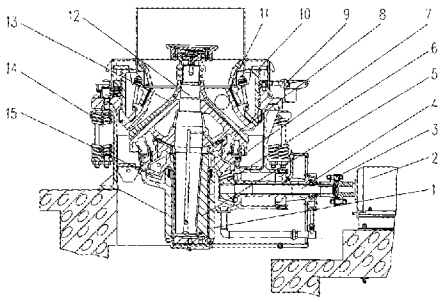

1、一种圆锥破碎机，包括机架和主轴，其特征是：机架下部正中央装有偏心轴套，偏心轴套上部安装大圆锥齿轮，机架中部装有碗形轴承架，圆锥躯体固装在主轴上端并坐在碗形轴承架上，主轴下端穿过碗形轴承架后插在偏心轴套内，破碎壁固装在圆锥躯体上，轧臼壁置于调整套内侧形成定锥，而与大圆锥齿轮相啮合的小圆锥齿轮则通过传动轴和联轴器与电动机动力相连。

2、如权利要求 1 所述的圆锥破碎机，其特征是：所述碗形轴承架、圆锥躯体、支承套、调整套、轧臼壁和破碎壁的安装轴承座均采用干油密封，各用一组小弹簧支撑密封环，密封环内加注有润滑脂。

3、如权利要求 1 或 2 所述的圆锥破碎机，其特征是：所述碗形轴承架通过内六角螺钉固定在机架上。

4、如权利要求 1 所述的圆锥破碎机，其特征是：所述机架为铸钢整体结构机架，机架内的衬套采用浇注锌合金。

5、如权利要求 1 所述的圆锥破碎机，其特征是：所述主轴与圆锥躯体和破碎壁组成的动锥相连，主轴下端插在偏心轴套内。

6、如权利要求 1 所述的圆锥破碎机，其特征是：所述轧臼壁连接在调整套内。

7、如权利要求 1 所述的圆锥破碎机，其特征是：所述破碎壁固定在动锥上。

8、如权利要求 1 所述的圆锥破碎机，其特征是：所述大圆锥齿轮通过传动轴上的小圆锥齿轮，与电动机上的联轴器动力连接。

圆锥破碎机

【技术领域】

本实用新型涉及一种圆锥破碎机，尤其是涉及一种生产能力大、故障率低、功率消耗少、使用可靠的弹簧圆锥破碎机。

【背景技术】

冶金、矿山、建材、公路、铁路、水泥和化工等行业的原材料都离不开破碎。传统的弹簧圆锥破碎机防尘采用水密封，操作不便，当水压过高时，容易造成油水混合，使得稀油站不能正常供给润滑油，常常导致衬套烧毁；水压过低时，又无法冲洗干净进入密封槽内的粉尘，造成密封槽堵塞。

传统的弹簧圆锥破碎机采用碗形轴承架直接坐在机架上，碗形轴承架由于受到破碎力的倾覆力作用，机架与碗形轴承架的配合密封面容易磨损破坏，吸附粉尘沿碗形轴承架外壁进入润滑油腔，污染润滑油，使得稀油站不能正常供给润滑油，稀油站的油泵也容易损坏，而且加速了各个衬套、碗形轴瓦以及齿轮副的磨损。

传统的弹簧圆锥破碎机小圆锥齿轮的结构强度较低，影响破碎机采用的电机功率较小，生产效率较低。

传统的弹簧圆锥破碎机圆锥躯体结构强度较差，使用过程中圆锥躯体容易损坏，特别是在由过铁或破碎机过载时，悬臂容易折断。

传统的弹簧圆锥破碎机稀油润滑流量较小，对各个衬套、碗形轴瓦以及齿轮副的润滑效果差，导致各个衬套、碗形轴瓦以及齿轮副的磨损较快，使用寿命较短，而且容易导致各个衬套、碗形轴瓦的烧毁。

传统的弹簧圆锥破碎机圆锥球面与碗形轴瓦在使用过程中，常常会有内圈接触情况发生，这导致了圆锥躯体自转过快，碎石生产能力下降。

传统的弹簧圆锥破碎机的摆动频率较低，碎石生产能力较低。

传统的弹簧圆锥破碎机固定机架衬套的浇注锌合金容易产生松动，使用过程容易上窜。

【实用新型内容】

为了克服现有技术的上述缺点，本实用新型提供一种采用干油密封、产量高、故障率低、效率高、使用安全可靠的圆锥破碎机。

本实用新型解决其技术问题所采用的技术方案是：一种圆锥破碎机，包括

机架和主轴，机架下部正中央装有偏心轴套，偏心轴套上部安装大圆锥齿轮，机架中部装有碗形轴承架，圆锥躯体固装在主轴上端并坐在碗形轴承架上，主轴下端穿过碗形轴承架后插在偏心轴套内，破碎壁固装在圆锥躯体上，轧臼壁置于调整套内侧形成定锥，而与大圆锥齿轮相啮合的小圆锥齿轮则通过传动轴和联轴器与电动机动力相连。

所述碗形轴承架、圆锥躯体、支承套、调整套、轧臼壁和破碎壁的安装轴承座均采用干油密封，各用一组小弹簧支撑密封环，密封环内加注有润滑脂。

所述碗形轴承架通过内六角螺钉固定在机架上。

所述机架为铸钢整体结构机架，机架内的衬套采用浇注锌合金。

所述主轴与圆锥躯体和破碎壁组成的动锥相连，主轴下端插在偏心轴套内。

所述轧臼壁连接在调整套内。

所述破碎壁固定在动锥上。

所述大圆锥齿轮通过传动轴上的小圆锥齿轮，与电动机上的联轴器动力连接。

本实用新型的有益效果是：采用干油密封，碗形轴承架固定在机架上，密封方便，效果可靠；采用特制机架衬套，浇注锌合金后，锌合金不会松动，机架衬套不会上窜，使用安全可靠；机件结构强度高，使用寿命长；摆动频率较高，生产效率较传统机型高 10%以上。

【附图说明】

图 1 是本实用新型的结构示意图；

图中：1-机架，2-电动机，3-联轴器，4-传动轴，5-偏心轴套，6-小圆锥齿轮，7-碗形轴承架，8-圆锥躯体，9-支承套，10-调整套，11-轧臼壁，12-主轴，13-破碎壁，14-弹簧，15-大圆锥齿轮。

【具体实施方式】

下面结合附图和实施例对本实用新型进一步说明。

参见图 1，一种圆锥破碎机，包括机架 1 和主轴 12，铸钢机架 1 下部正中央装有偏心轴套 5，偏心轴套 5 上部安装大圆锥齿轮 15，机架 1 中部装有碗形轴承架 7，圆锥躯体 8 固装在主轴 12 上端并坐在碗形轴承架 7 上，主轴 12 下端穿过碗形轴承架 7 后插在偏心轴套 5 内，破碎壁 13 固装在圆锥躯体 8 上，轧臼壁 11 置于调整套 10 内侧形成定锥，而与大圆锥齿轮 15 相啮合的小圆锥齿轮 6 则通过传动轴 4 和联轴器 3 与电动机 2 动力相连；支承套 9 是为了实现对调整套 10 的锁紧，弹簧 11 主要是对机器起着过铁保险作用。

所述碗形轴承架 7、圆锥躯体 8、支承套 9、调整套 10、轧臼壁 11 和破碎壁 13 的安装轴承座均采用干油密封，各用一组小弹簧支撑密封环，密封环内加注有润滑脂，密封效果可靠，装拆操作方便，不会出现油水混合的现象；同时，稀油润滑流量较大，对各个衬套、碗形轴瓦以及齿轮副的润滑效果好，不易烧毁各个衬套、碗形轴瓦，而且延长了它们的使用寿命；采用特制的碗形轴瓦，圆锥球面与碗形轴瓦外圈接触，碎石生产能力稳定。采用一组内六角螺钉将碗形轴承架 7 固定在机架 1 上，安装后机架 1 与碗形轴承架 7 配合面密封效果可靠，装拆方便，粉尘不会沿碗形轴承架 7 外壁进入润滑油腔，污染润滑油。机架 1 采用铸钢整体结构铸造，采用特制机架衬套，浇注锌合金后，锌合金不会松动，机架衬套不会上窜；所述圆锥躯体 8 坐在碗形轴承架 7 上，圆锥躯体 8 结构强度较大，使用寿命长，不易损坏；主轴 12 与圆锥躯体 8 和破碎壁 13 组成的动锥相连；轧臼壁 11 连接在调整套 10 内；破碎壁 13 固定在动锥上；轧臼壁 11 与破碎壁 13 都采用高锰钢制造；主轴 12 下端插在偏心轴套 5 内；大圆锥齿轮 15 通过传动轴上的小圆锥齿轮 6，与电动机 2 上的联轴器动力连接。小圆锥齿轮 6 采用优质的耐磨材料和特殊的热处理工艺，机构强度较高，使用的电机功率较大，碎石生产效率较高。

本实用新型的工作原理是：开动电动机 2，电动机 2 通过弹性联轴器 3、传动轴 4 和一对圆锥齿轮（小圆锥齿轮 6 和大圆锥齿轮 15）带动偏心轴套 5 转动，破碎圆锥的主轴 12 在偏心轴套 5 的迫动下做旋摆运动，使破碎壁 13 和轧臼壁 11 时而靠近时而远离，矿石在破碎腔内不断的受到挤压和冲击而被破碎。另外借旋转调整套 10，使定锥上的轧臼壁 11 上升或下降，从而改变排矿口的大小，满足破碎不同物料规格要求。

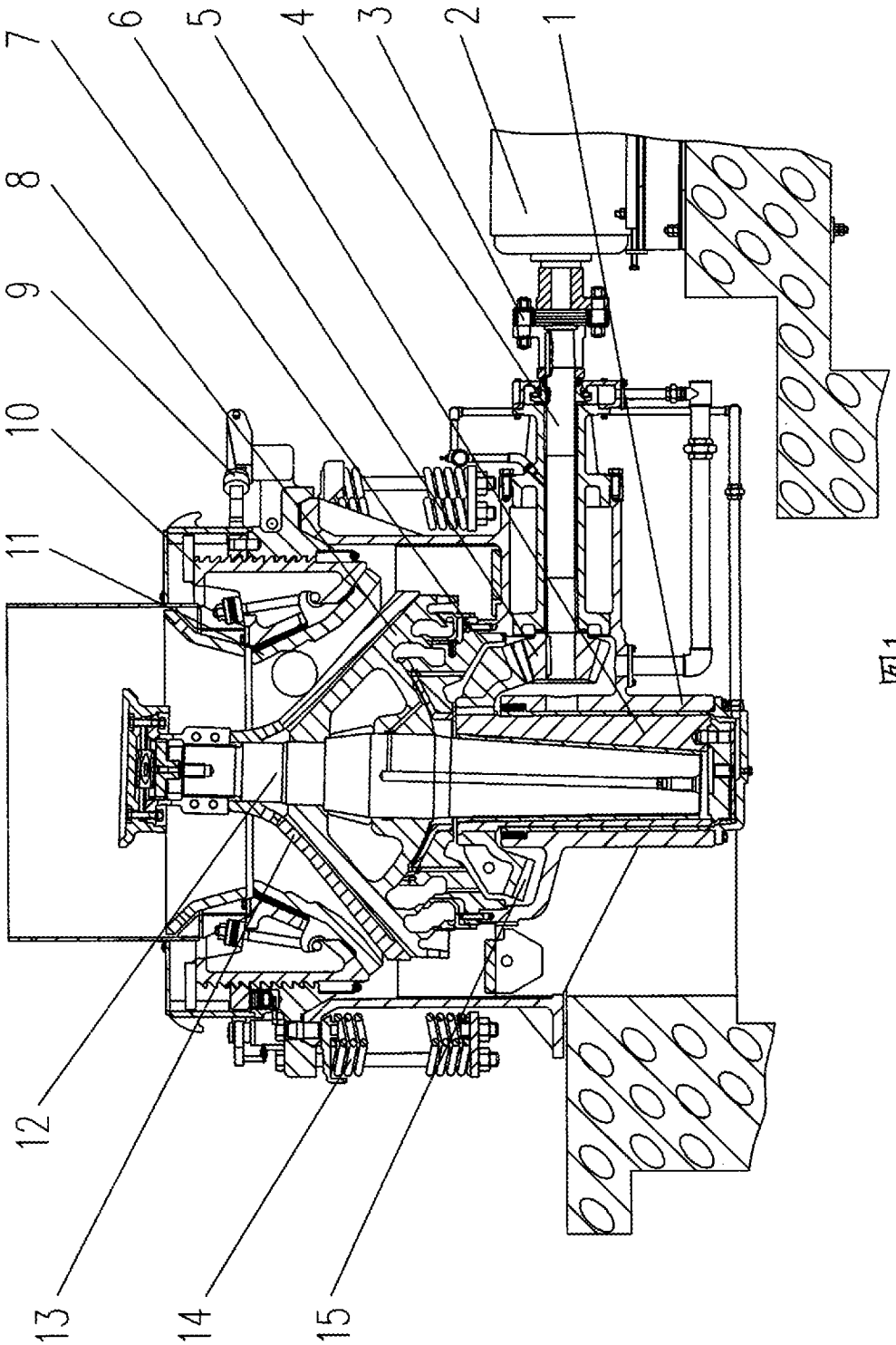

图1

Espacenet

Bibliographic data: CN201431896 (Y) — 2010-03-31

Novel cone crusher

Inventor(s): JIANGUO CHEN; QINLIN GU ± (CHEN JIANGUO, ; GU QINLIN)

Applicant(s): SHANGHAI SHIBANG MACHINERY CO LTD ± (SHANGHAI SHIBANG MACHINERY CO., LTD)

Classification: **- international:** ***B02C2/04; B02C2/06***
- cooperative:

Application number: CN2009273648U 20090220

Priority number (s): CN2009273648U 20090220

Abstract of CN201431896 (Y)

The utility model discloses a novel cone crusher. The novel cone crusher comprises an upper rack body and a lower rack body; a feed hopper is arranged on the upper rack body; a support shaft is connected with the lower rack body through a bearing support; the interior of the support shaft is connected to an eccentric main shaft through a shaft sleeve; the axis of the eccentric main shaft deviatesfrom a central axis to form a certain angle and intersects the central axis; the middle part of the eccentric main shaft is connected to a movable cone; a crushing wall is fixed on the outer lateral wall of the movable cone; a rolled mortar wall corresponding to the crushing wall is arranged on the upper rack body; a belt pulley connected with a power unit is arranged at the lower end of the support shaft; a hydraulic regulating device used for regulating the axial positioning of the eccentric main shaft is arranged between the eccentric main shaft and the support shaft; and two ends of the support shaft are connected with a bearing house through bearings. Compared with the prior art, the cone crusher provided by the utility model has the advantages of higher efficiency, better performanceand simple structure, greatly reduces production cost, and is convenient for operation and maintenance.

[19] 中华人民共和国国家知识产权局

[51] Int. Cl.
B02C 2/04 (2006.01)
B02C 2/06 (2006.01)

[12] 实用新型专利说明书

专利号 ZL 200920073648.6

[45] 授权公告日 2010 年 3 月 31 日

[11] 授权公告号 CN 201431896Y

[22] 申请日 2009.2.20

[21] 申请号 200920073648.6

[73] 专利权人 上海世邦机器有限公司

地址 201201 上海市浦东金桥南区建业路 416 号

[72] 发明人 陈建国 顾勤林

权利要求书 1 页 说明书 2 页 附图 1 页

[54] 实用新型名称

一种新型圆锥破碎机

[57] 摘要

本实用新型公开了一种新型圆锥破碎机，包括有上架体、下架体，在上架体上设有进料斗，支承轴通过轴承座与所述下架体连接起来，在所述支承轴内通过轴套连接有偏心主轴，偏心主轴的轴线与中心轴线偏离一定的角度且与中心轴线相交，所述偏心主轴的中部连接有动锥体，在所述动锥体的外侧壁上固定破碎壁，在上架体上设有轧臼壁与所述破碎壁相对应；在所述支承轴上设有与动力装置连接的皮带轮，位于支承轴下端；在所述偏心主轴与支承轴之间设有液压调节装置用于偏心主轴的轴向定位；所述支承轴的两端与所述的轴承室通过轴承相连接。 本实用新型圆锥破碎机比现有技术具有更高的效率，性能更优，而其结构简单，制作成本大大降低，且便于操作和维修。

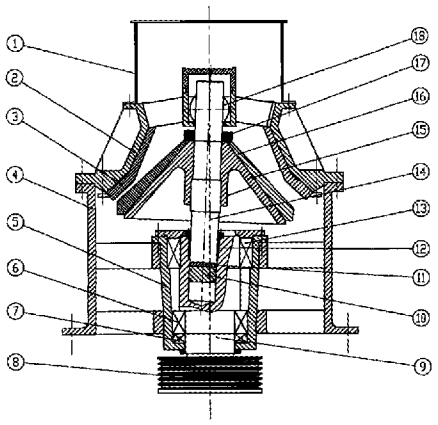

1、一种新型圆锥破碎机，包括上架体（2）、下架体（4），在上架体（2）上设有进料斗（1），支承轴（9）通过轴承座（5）与所述下架体（4）连接起来，在所述支承轴（9）内通过轴套（12）连接有偏心主轴（14），偏心主轴（14）的轴线与中心轴线偏离一定的角度且与中心轴线相交，所述偏心主轴（14）的中部连接有动锥体（15），在所述动锥体（15）的外侧壁上固定破碎壁（16），在上架体（2）上设有轧臼壁（3）与所述破碎壁（16）相对应；在所述支承轴（9）上设有与动力装置连接的皮带轮（8）；在所述偏心主轴（14）与支承轴（9）之间设置用作偏心主轴（14）轴向定位的液压调节装置，通过对液压调节装置的调节可以调整所述破碎壁（16）与轧臼壁（3）之间排料口的间隙大小以及在破碎过程中起到过载保护作用。

2、根据权利要求 1 所述的新型圆锥破碎机，其特征在于：所述的皮带轮（8）位于支承轴（9）的下端。

3、根据权利要求 1 所述的新型圆锥破碎机，其特征在于：所述的偏心主轴（14）的上部通过关节轴承（18）与上架体（2）连接，且所述关节轴承（18）的接触面为球面。

4、根据权利要求 1 所述的新型圆锥破碎机，其特征在于：所述动锥体（15）上端用特制螺母（17）锁紧，且其下端部设有配重块。

5、根据权利要求 1 所述的新型圆锥破碎机，其特征在于：所述液压调节装置为：在所述偏心主轴（14）的下端通过摩擦盘（11）连接有柱塞（10），支承轴（9）与柱塞（10）之间形成一封闭的圆形腔室，并在所述的支承轴（9）上设有一通孔，以便压力油进入密封腔内。

一种新型圆锥破碎机

技术领域

本实用新型属于物料破碎机械技术领域，特别涉及一种新型圆锥破碎机。

背景技术

本实用新型是对中国专利号为：ZL 200620031577.X、名称为“自由式圆锥破碎机”的进一步改进。上述专利所存在的不足主要表现偏心主轴的两端通过轴承座固定在机体内，运行过程中当遇到不可破碎物（如铁块）时不能提供有效的过载保护，轴承座内的支撑轴承极易损坏，偏心主轴的抗弯强度和承载能力也较低，同时定锥体与动锥套之间破碎间隙的调整也不方便；另外，该专利中的传动装置位于进料斗中，皮带轮和皮带的保护装置极易被物料打坏，同时使得不能满腔进料，极大地降低了破碎效率。

发明内容

本实用新型的目的在于针对现有技术的不足，提出一种破碎（细碎）效果较为理想的新型圆锥破碎机，并使其具有结构简单、易于制造和维护的特点。

为实现上述目的，本实用新型可采取下述技术方案：

本实用新型所述的新型圆锥破碎机，包括上架体、下架体，在上架体上设有进料斗，支承轴通过轴承座与所述下架体连接起来，在所述支承轴内通过轴套连接有偏心主轴，偏心主轴的轴线与中心轴线偏离一定的角度且与中心轴线相交，所述偏心主轴的中部连接有动锥体，在所述动锥体的外侧壁上固定破碎壁，在上架体上设有轧臼壁与所述破碎壁相对应；在所述支承轴上设有与动力装置连接的皮带轮，位于支承轴下端。

在所述偏心主轴与支承轴之间设有液压调节装置用作偏心主轴的轴向定位，通过对液压调节装置的调节可以调整所述破碎壁与轧臼壁之间排料口的间隙大小以及在破碎过程中起到过载保护作用。

所述支承轴的两端与所述的轴承室通过轴承相连接。

所述的偏心主轴的上部通过关节轴承与上架体连接，且所述关节轴承的接触面为球面。

所述动锥体上端用特制螺母锁紧，且其下端部设有配重块。

本实用新型的优点在于偏心主轴的上端通过关节轴承与上架体连接，其下端与支承轴之间设有液压调节装置，通过对液压调节装置的调节可以调整破碎间隙，同时在破碎过程中起到过载保护的作用；所述传动装置位于下架体下端，既可防止皮带轮和皮带的保护装置被物料击坏，又便于满腔进料，从而提高了破碎效率。因此，本破碎机比现有技术具有更高的效率，性能更优，而其结构简单，制作成本大大降低，且便于操作和维修。

附图说明

图 1 为本实用新型的结构示意图。

具体实施方式

如图所示，本实用新型所述的新型圆锥破碎机，包括上架体 2、下架体 4，在上架体 2 上设有进料斗 1，支承轴 9 通过轴承座 5 与所述下架体 4 连接起来，在所述支承轴 9 内通过轴套 12 连接有偏心主轴 14，偏心主轴 14 的轴线与中心轴线偏离一定的角度且与中心轴线相交，所述偏心主轴 14 的中部连接有动锥体 15，在所述动锥体 15 的外侧壁上固定破碎壁 16，在上架体 2 上设有轧臼壁 3 与所述破碎壁 16 相对应；在所述支承轴 9 上设有与动力装置连接的皮带轮 8，位于支承轴 9 下端。

在所述偏心主轴 14 的下端通过摩擦盘 11 连接有柱塞 10，支承轴 9 与柱塞 10 之间形成一封闭的圆形腔室，并在所述的支承轴 9 上设有一通孔，以便压力油进入密封腔内，通过对油压的调节可以调整由动锥体 15、破碎壁 16 和偏心主轴 14 所组成的动锥部分上升或下降，以调整破碎壁 16 与轧臼壁 3 之间排料口的间隙大小；当轧臼壁 3 与破碎壁 16 之间的破碎腔中进入不可破碎物（如铁块等），破碎阻力急剧增大，密封腔中油压也随之增大，迫使压力油回流，动锥部分会向下移动，增大排料口，排出不可破碎物，从而

起到过载保护作用。

所述支承轴 9 的两端与所述的轴承座 5 通过轴承 6、7 和 13 相连接。

所述的偏心主轴 14 的上部通过关节轴承 18 与上架体 2 连接，且所述关节轴承 18 的接触面为球面。

所述动锥体 15 上端用特制螺母 17 锁紧，且其下端部设有配重块。

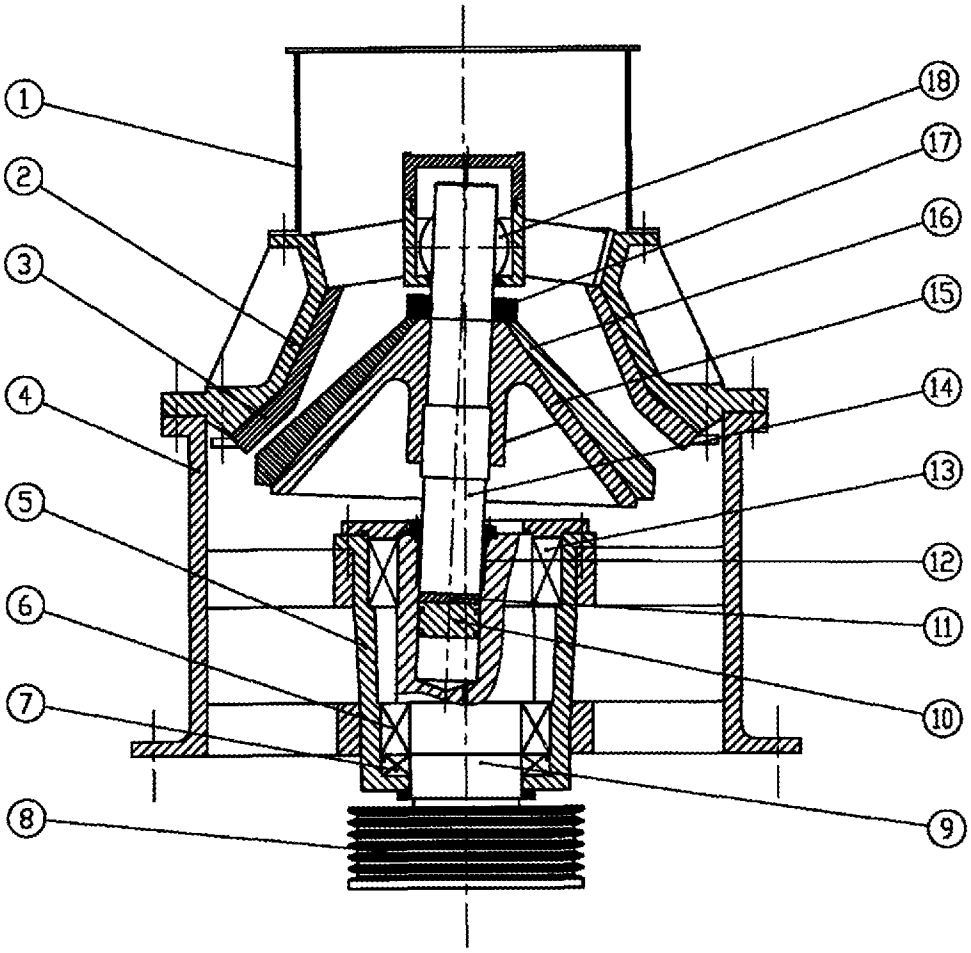

图 1

Espacenet

Bibliographic data: CN201807388 (U) — 2011-04-27

Movable cone supporting seat for conical crusher

Inventor(s):	LIBO CHEN ± (CHEN LIBO)
Applicant(s):	CHEN LIHUA ± (CHEN LIHUA)

Classification:	**- international:** ***B02C2/04***
	- cooperative:
Application number:	CN20102537617U 20100916
Priority number(s):	CN20102537617U 20100916

Abstract of CN201807388 (U)

The utility model discloses a movable cone supporting seat for a conical crusher, comprising an upper round disc, a middle round disc and a lower round disc which are arranged below a movable cone main shaft; a base is arranged below the lower round disc and supports the movable cone main shaft by the upper round disc, the middle round disc and the lower round disc; the upper round disc is fixed on a lower end shaft head of the movable cone main shaft; the lower round disc is fixed on the base; the lower surface of the upper round disc is provided with an outward-convex spherical surface I; the upper surface of the lower round disc is provided with an outward-convex spherical surface II; the upper surface of the middle round disc is provided with an inward-concave spherical surface I matched with the outward-convex spherical surface I; and the lower surface of the middle round disc is provided with an inward-concave spherical surface II matched with the outward-convex spherical surface II. In the movable cone supporting seat, the structure is novel and unique, the running is stable, the end surfaces of the upper round disc, the middle round disc and the lower round disc are processed into spherical structures, automatic centering function is achieved, grooves are arranged on the spherical surfaces, the oil storage capability and the lubricating effect are improved, therefore, the friction resistance among all the round discs is reduced, the wear is reduced and the service life is prolonged.

(19)中华人民共和国国家知识产权局

(12)实用新型专利

(10)授权公告号 CN 201807388 U
(45)授权公告日 2011.04.27

(21)申请号 201020537617.4

(22)申请日 2010.09.16

(73)专利权人 陈利华
地址 313103 浙江省长兴县和平镇工业园区

(72)发明人 陈立波

(74)专利代理机构 杭州华鼎知识产权代理事务所（普通合伙） 33217
代理人 胡根良

(51)Int.Cl.
B02C 2/04(2006.01)

(ESM)同样的发明创造已同日申请发明专利

权利要求书 1 页 说明书 3 页 附图 3 页

(54)实用新型名称

一种圆锥破碎机用动锥支承座

(57)摘要

本实用新型公开了一种圆锥破碎机用动锥支承座，包括设在动锥主轴下方的上圆盘、中圆盘和下圆盘，在下圆盘下方设有底座，底座通过上圆盘、中圆盘和下圆盘来支承动锥主轴，上圆盘固定在动锥主轴的下端轴头上，下圆盘固定在底座上，在上圆盘的下表面设有外凸球面 I，在下圆盘的上表面设有外凸球面 II，在中圆盘的上表面设有与外凸球面 I 配合的内凹球面 I，在中圆盘的下表面设有与外凸球面 II 配合的内凹球面 II。本实用新型结构新颖、独特、运转平稳，将上、中和下圆盘的端面加工成球面结构，具有自动对中作用，并且在球面上设有沟槽，增加了圆盘的储油能力，提高了润滑效果，从而减少了各个圆盘之间的摩擦阻力，减小磨损，提高了使用寿命。

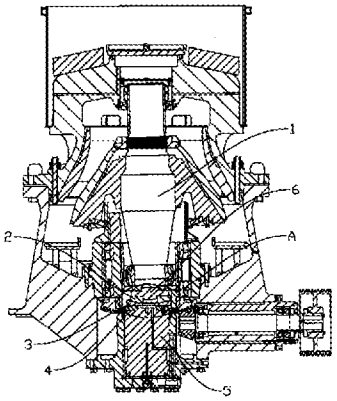

CN 201807388 U

1. 一种圆锥破碎机用动锥支承座，包括设在动锥主轴 (1) 下方的上圆盘 (2)、中圆盘 (3) 和下圆盘 (4)，在下圆盘下方设有底座 (5)，底座通过上圆盘、中圆盘和下圆盘来支承动锥主轴，其特征在于：所述上圆盘固定在动锥主轴的下端轴头上，下圆盘固定在底座上，在上圆盘的下表面设有外凸球面 I(21)，在下圆盘的上表面设有外凸球面 II(41)，在中圆盘的上表面设有与外凸球面 I 配合的内凹球面 I(31)，在中圆盘的下表面设有与外凸球面 II 配合的内凹球面 II(32)。

2. 根据权利要求 1 所述的一种圆锥破碎机用动锥支承座，其特征在于：所述外凸球面 I 上设有径向沟槽 I(211) 和环形沟槽 I(212)，所述外凸球面 II 上设有径向沟槽 II(411) 和环形沟槽 II(412)。

3. 根据权利要求 1 所述的一种圆锥破碎机用动锥支承座，其特征在于：所述上圆盘与动锥主轴的下端轴头之间设有连接块 (6)，上圆盘通过连接块固定在动锥主轴的下端轴头上。

4. 根据权利要求 3 所述的一种圆锥破碎机用动锥支承座，其特征在于：所述动锥主轴的下端轴头的底端面上设有凹槽 (11)，连接块的上端面设有凸台 I(61)，连接块通过凸台 I 与凹槽过盈配合固定在动锥主轴的下端轴头上，连接块的下端面设有凸台 II(62)，上圆盘设有套装凸台 II 的中心孔 I(22)，凸台 II 上穿出中心孔 I 部分的侧壁上设有环槽 (63)，环槽中设有定位上圆盘的挡圈 (64)。

5. 根据权利要求 1 所述的一种圆锥破碎机用动锥支承座，其特征在于：所述中圆盘上设有中心孔 II(33)，下圆盘上设有中心孔 III(42)。

6. 根据权利要求 1 或 5 所述的一种圆锥破碎机用动锥支承座，其特征在于：所述底座的上端面设有与中心孔 III 对应配合的凸台 III(51)，在下圆盘和底座之间还设有限制下圆盘和底座发生相对转动的限制结构。

7. 根据权利要求 6 所述的一种圆锥破碎机用动锥支承座，其特征在于：所述限制结构为定位销 (7)，在下圆盘中设有插装定位销的定位通孔 (43)，在底座上设有插装定位销的定位孔 (52)，定位通孔和定位孔相对应。

8. 根据权利要求 6 所述的一种圆锥破碎机用动锥支承座，其特征在于：所述底座中设有滑润通道 (53)，滑润通道的出口设在凸台 III 的上端面上。

一种圆锥破碎机用动锥支承座

技术领域

[0001] 本实用新型涉及圆锥破碎机，特别是一种圆锥破碎机用动锥支承座。

背景技术

[0002] 动锥支承座是圆锥破碎机的关键组件之一，其主要作用支承动锥组，并具有可旋转功能。现有技术采用的结构形式如图 5 所示，动锥主轴 01 与偏心套 02 紧配，偏心套 02 设在底盘 04 上，底盘 04 下方支承底盘的摩擦盘，摩擦盘包括上圆盘 05、中圆盘 06 和下圆盘 07，下圆盘 07 底端设置有垫片组 08，垫片组 08、下圆盘 07、中圆盘 06 和上圆盘 05 依次从下到上置于底盖 03 内并支承底盘 04，底盖 03 由螺栓固定在机架。这样的结构在装配时通过调节下圆盘 07 下部的垫片 08 的垫片数，来调整偏心套 02 的上下位置。当偏心套 02 旋转时，上圆盘 05、中圆盘 06 和下圆盘 07 也一起互相旋转，由于偏心套 02 的受力很大，故上、中、下圆盘的加工精度要求高；由于各圆盘端面是一平面，因而圆盘之间的摩擦力很大，并且各圆盘没有充分的润滑措施，很容易磨损。

实用新型内容

[0003] 本实用新型所要解决的问题就是提供一种结构新颖、独特、运转平稳的圆锥破碎机用动锥支承座，将圆盘的端面加工成球面结构形式，加强润滑，减少了圆盘之间的摩擦阻力。

[0004] 为了解决上述技术问题，本实用新型采用如下技术方案：一种圆锥破碎机用动锥支承座，包括设在动锥主轴下方的上圆盘、中圆盘和下圆盘，在下圆盘下方设有底座，底座通过上圆盘、中圆盘和下圆盘来支承动锥主轴，其特征在于：所述上圆盘固定在动锥主轴的下端轴头上，下圆盘固定在底座上，在上圆盘的下表面设有外凸球面 I，在下圆盘的上表面设有外凸球面 II，在中圆盘的上表面设有与外凸球面 I 配合的内凹球面 I，在中圆盘的下表面设有与外凸球面 II 配合的内凹球面 II。

[0005] 进一步的，所述外凸球面 I 上设有径向沟槽 I 和环形沟槽 I，所述外凸球面 II 上设有径向沟槽 II 和环形沟槽 II。便于导油，增强润滑。

[0006] 进一步的，所述上圆盘与动锥主轴的下端轴头之间设有连接块，上圆盘通过连接块固定在动锥主轴的下端轴头上。

[0007] 进一步的，所述动锥主轴的下端轴头的底端面上设有凹槽，连接块的上端面设有凸台 I，连接块通过凸台 I 与凹槽过盈配合固定在动锥主轴的下端轴头上，连接块的下端面设有凸台 II，上圆盘设有套装凸台 II 的中心孔 I，凸台 II 上穿出中心孔 I 部分的侧壁上设有环槽，环槽中设有定位上圆盘的挡圈。便于安装更换。

[0008] 进一步的，所述中圆盘上设有中心孔 II，下圆盘上设有中心孔 III。便于润滑油流通。

[0009] 进一步的，所述底座的上端面设有与中心孔 III 对应配合的凸台 III，在下圆盘和底座之间还设有限制下圆盘和底座发生相对转动的限制结构。

[0010] 进一步的，所述限制结构为定位销，在下圆盘中设有插装定位销的定位通孔，在底座上设有插装定位销的定位孔，定位通孔和定位孔相对应。

[0011] 进一步的，所述底座中设有滑润通道，滑润通道的出口设在凸台 III 的上端面上。 这样润滑油直接顺着中心孔 III 流到中心孔 II 和中心孔 I 对整个支承座进行润滑。

[0012] 采用上述技术方案后，本实用新型具有如下优点：将上、中和下圆盘的端面加工成球面结构，具有自动对中作用，并且在球面上设有沟槽，增加了圆盘的储油能力，提高了润滑效果，从而减少了各个圆盘之间的摩擦阻力，减小磨损，提高了使用寿命。

附图说明

[0013] 下面结合附图对本实用新型作进一步说明：

[0014] 图 1 为本实用新型一种实施例的结构示意图；

[0015] 图 2 为图 1 中 A 处放大图；

[0016] 图 3 为图 2 中 B 处放大图；

[0017] 图 4 为外凸球面 I 的仰视图；

[0018] 图 5 为现有支承座的结构示意图。

具体实施方式

[0019] 如图 1 至 4 所示本实用新型一种实施例的结构示意图，一种圆锥破碎机用动锥支承座，包括设在动锥主轴 1 下方的上圆盘 2、中圆盘 3 和下圆盘 4，在下圆盘下方设有底座 5，底座通过上圆盘、中圆盘和下圆盘来支承动锥主轴，上圆盘固定在动锥主轴的下端轴头上，下圆盘固定在底座上，在上圆盘的下表面设有外凸球面 I21，在下圆盘的上表面设有外凸球面 II41，在中圆盘的上表面设有与外凸球面 I 配合的内凹球面 I31，在中圆盘的下表面设有与外凸球面 II 配合的内凹球面 II32。 外凸球面 I 上设有一条以上径向沟槽 I211 和一条以上环形沟槽 I212，外凸球面 II 上设有一条以上径向沟槽 II 和一条以上环形沟槽 II。

[0020] 上圆盘与动锥主轴的下端轴头之间设有连接块 6，上圆盘通过连接块固定在动锥主轴的下端轴头上。 动锥主轴的下端轴头的底端面上设有凹槽 11，连接块的上端面设有凸台 I61，连接块通过凸台 I 与凹槽过盈配合固定在动锥主轴的下端轴头上，连接块的下端面设有凸台 II62，上圆盘设有套装凸台 II 的中心孔 I22，凸台 II 上穿出中心孔 I 部分的侧壁上设有环槽 63，环槽中设有定位上圆盘的挡圈 64。 中圆盘上设有中心孔 II33，下圆盘上设有中心孔 III42。 底座的上端面设有与中心孔 III 对应配合的凸台 III51，在下圆盘和底座之间还设有限制下圆盘和底座发生相对转动的限制结构。 所述限制结构为定位销 7，在下圆盘中设有插装定位销的定位通孔 43，在底座上设有插装定位销的定位孔 52，定位通孔和定位孔相对应。底座中设有滑润通道 53，滑润通道的出口设在凸台 III 的上端面上。

[0021] 本实用新型结构新颖、独特、运转平稳，将上、中和下圆盘的端面加工成球面结构，具有自动对中作用，并且在球面上设有沟槽，增加了圆盘的储油能力，提高了润滑效果，从而减少了各个圆盘之间的摩擦阻力，减小磨损，提高了使用寿命。

[0022] 除上述优选实施例外，本实用新型还有其他的实施方式，本领域技术人员可以

根据本实用新型作出各种改变和变形，只要不脱离本实用新型的精神，均应属于本实用新型所附权利要求所定义的范围。

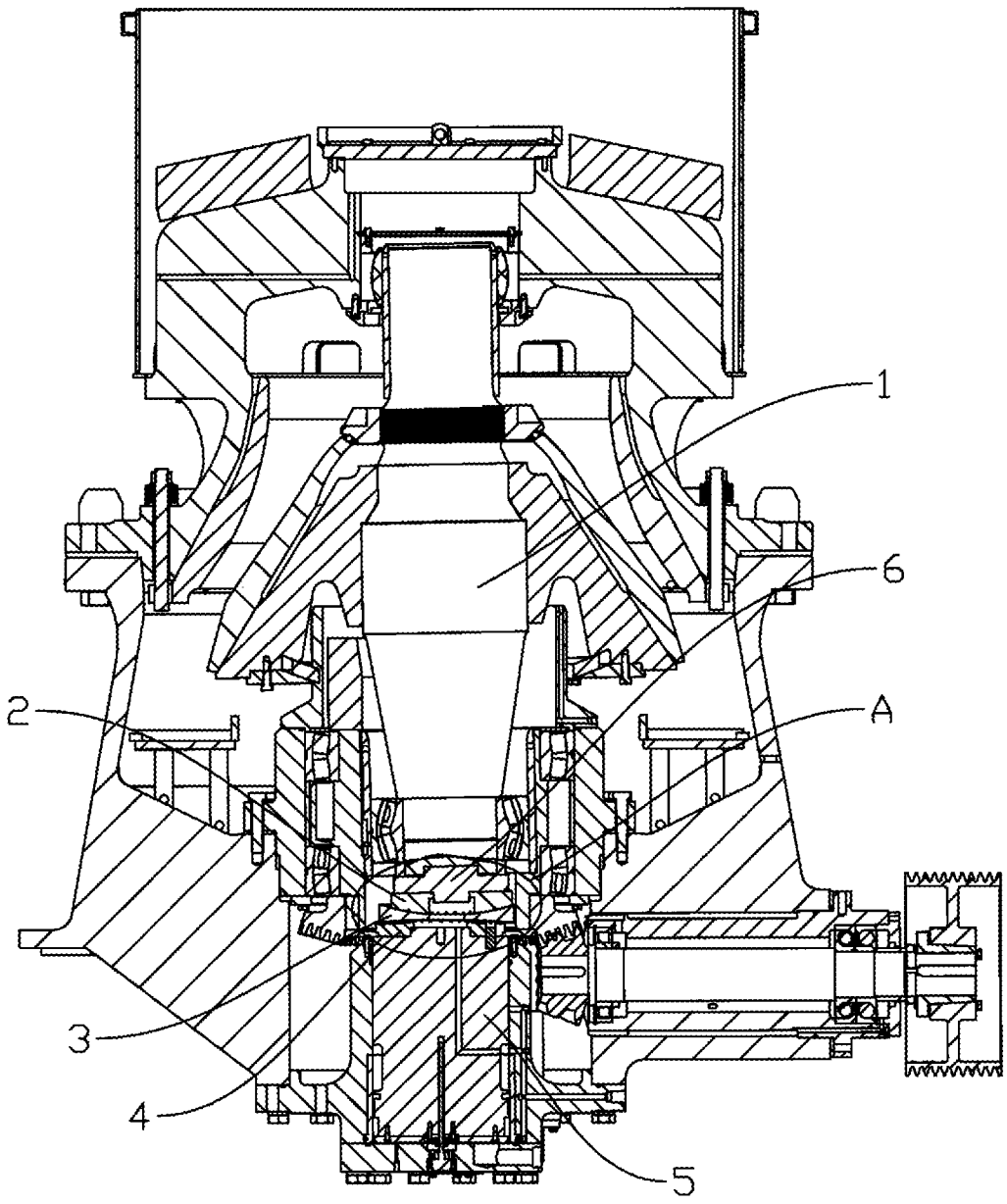

图 1

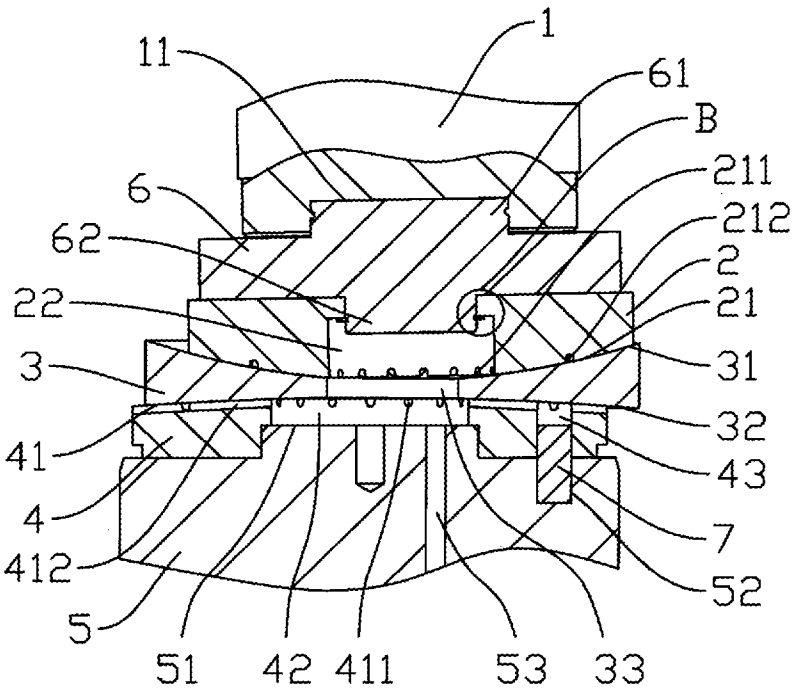
1
11
61
B
211
212
6
62
2
22
21
3
31
32
41
43
4
7
412
52
5
51
42
411
53
33

图 2

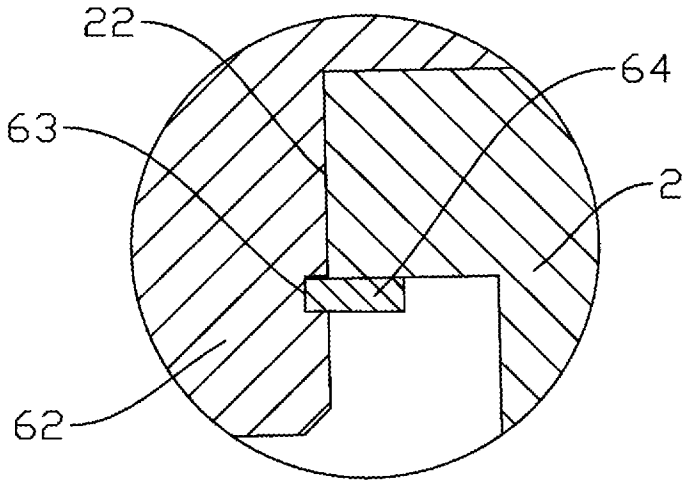
22
64
63
2
62

图 3

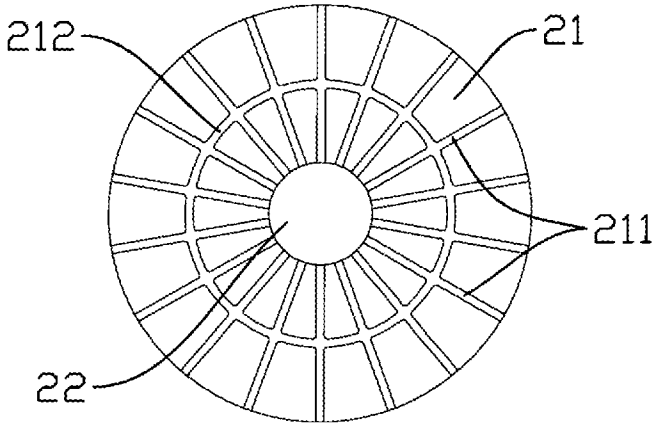

图 4

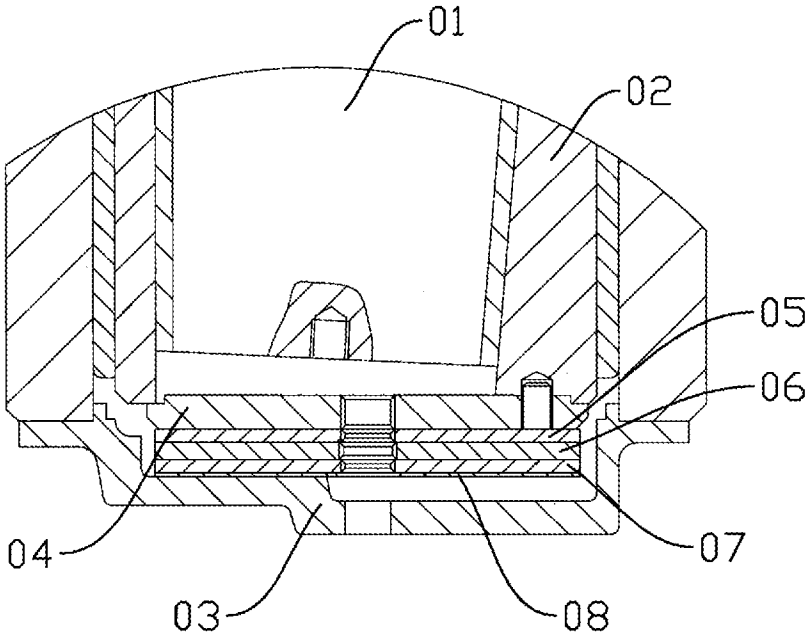

图 5

Espacenet

Bibliographic data: CN203170383 (U) — 2013-09-04

Bushing mounted on cross beam of gyratory crusher

Inventor(s): LAN XIANBIN ± (LAN XIANBIN)

Applicant(s): BENXI STEEL PLATE CO LTD ± (BENXI STEEL PLATE CO., LTD)

Classification: **- international:** ***B02C2/02***
- cooperative:

Application number: CN2013234703U 20130123

Priority number(s): CN2013234703U 20130123

Abstract of CN203170383 (U)

The utility model relates to a bushing mounted on a cross beam of a gyratory crusher. The bushing comprises a hollow cylindrical main body produced by high Al-Zn alloy steel, wherein radial inwards extending annular grooves are formed in the inner surface of the hollow cylindrical main body. According to the utility model, the bushing has stronger affinity to lubrication, has low fusing point, high heat conductivity, excellent self-lubricating performance and stronger abrasion resistant performance, is fast in heat dissipation, less prone to being subjected to metallurgical bonding with a steel shaft, and independent in antifriction; and besides, the manufacturing cost can be reduced while the service life can be prolonged.

(19)中华人民共和国国家知识产权局

(12)实用新型专利

(10)授权公告号 CN 203170383 U
(45)授权公告日 2013.09.04

(21)申请号 201320034703.7

(22)申请日 2013.01.23

(73)专利权人 本钢板材股份有限公司
地址 117000 辽宁省本溪市平山区人民路16号

(72)发明人 兰宪斌

(74)专利代理机构 本溪新科专利事务所（特殊普通合伙）21117
代理人 何军

(51)Int.Cl.
B02C 2/02(2006.01)

权利要求书1页 说明书2页 附图1页

(54)实用新型名称

安装在旋回破碎机横梁上的衬套

(57)摘要

本实用新型涉及一种安装在旋回破碎机横梁上的衬套，该衬套具有一个由高铝锌合金钢制成的空心圆柱形主体，在该空心圆柱形主体的内表面设置有径向向内延伸的环形槽。该衬套对润滑油的亲和力较强，其熔点低，热导率大，散热快，不易与钢轴发生冶金结合，且自润滑性好，该种衬套可独立减摩及耐磨性能较强，在延长其使用寿命的同时，还可降低制作成本。

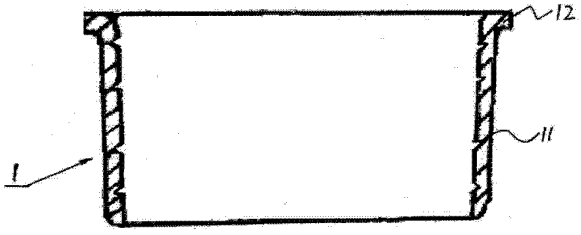

CN 203170383 U

1. 安装在旋回破碎机横梁上的衬套，其特征在于：该衬套具有一个由高铝锌合金钢制成的空心圆柱形主体，在该空心圆柱形主体的内表面设置有径向向内延伸的环形槽。

2. 根据权利要求 1 所述的衬套，其特征在于：所述环形槽间隔等距离地设置有 3-6 个。

3、根据权利要求 1 所述的衬套，其特征在于：所述空心圆柱形主体的上顶部设置有径向向外延伸的环形限位部。

安装在旋回破碎机横梁上的衬套

技术领域

[0001] 本实用新型涉及一种安装在旋回破碎机横梁上的衬套。

背景技术

[0002] 旋回破碎机是用于粉碎矿石或类似物料的专用设备，该设备主要包括一内表面为圆锥形的壳体和安装在该壳体上部的横梁，以及安装在壳体内的旋回式破碎锥，且破碎锥的主轴上端设置在横梁中部的衬套内，下端安装在轴套的偏心孔中。该种破碎机在破碎矿石或岩石类的物料时，破碎锥绕壳体的中心线作偏心回转运动，以对物料产生挤压、劈裂和弯曲作用，从而粉碎物料。由于破碎锥作偏心回转运动，其上的轴头在横梁衬套内作为回转基点运转，所以，横梁衬套需要承受径向偏心摩擦阻力和轴向滑动摩擦阻力，致使横梁衬套磨损较快。

[0003] 在现有技术中，旋回破碎机横梁上的衬套通常采用锡青铜合金制成，且只是由中空圆柱形主体构成，由于锡青铜合金的耐磨性能相对较差，价格也相对较高，同时在衬套内也没设置可以润滑油的存贮部位，所以，该种衬套的使用寿命较短，制作成本高。

[0004] 为解决上述问题，中国专利 102758846A 号公开的名称为“自润滑衬套”提出一种解决方案。该种衬套在钢基体内安装有自润滑编织物，其意是想通过自润滑编织物来提高衬套的耐磨性能。但，由于自润滑编织物不具有非常理想的刚性，致使该衬套很难连续地承受相对强大的径向偏心摩擦阻力和轴向滑动摩擦阻力，所以，该种衬套的使用寿命也不易大大延长，制作成本也不会降低很大。

发明内容

[0005] 本实用新型的目的是提供一种利用改变材质和提高润滑性能的解决易耐损和成本高等问题的安装在旋回破碎机横梁上的衬套。

[0006] 本实用新型所提出的安装在旋回破碎机横梁上的衬套，该衬套具有一个由高铝锌合金钢制成的空心圆柱形主体，在该空心圆柱形主体的内表面设置有径向向内延伸的环形槽。

[0007] 所述环形槽间隔等距离地设置有 3-6 个。所述空心圆柱形主体的上顶部设置有径向向外延伸的环形限位部。

[0008] 本实用新型所提出的安装在旋回破碎机横梁上的衬套采用高铝锌合金制作横梁上的衬套，对润滑油的亲和力较强，其熔点低，热导率大，散热快，不易与钢轴发生冶金结合，且自润滑性好，再加上在衬套内设置有用于存放润滑油的环形槽，所以，该种衬套可独立减摩及耐磨性能较强，在延长其使用寿命的同时，还可降低制作成本；另外，该衬套还具有较高的阻尼特性，可减震和抗噪。

附图说明

[0009] 附图 1 是本实用新型所提出的安装在旋回破碎机横梁上的衬套一个实施例的外

观剖面结构示意图。

[0010] 具体实施方式：

[0011] 参见附图 1，该图给出本实用新型所提出的安装在旋回破碎机横梁上的衬套一个实施例的外观结构。该衬套具有一个中空圆柱形主体 1，且该空心圆柱形主体 1 是由高铝锌合金钢制成，在该空心圆柱形主体 1 的内表面设置有 4 个径向向内延伸且间隔等距离的环形槽 11，环形槽 11 可以使润滑油保留在其内。环形槽 11 的数量可以根据其宽度的大小来设置，如环形槽 11 的宽度如果较大，可以设置 3 个，宽度较小可以设置 6 个。在空心圆柱形主体 1 的上顶部设置有径向向外延伸的环形限位部 12，该环形限位部 12 能将空心圆柱形主体 1 固定。

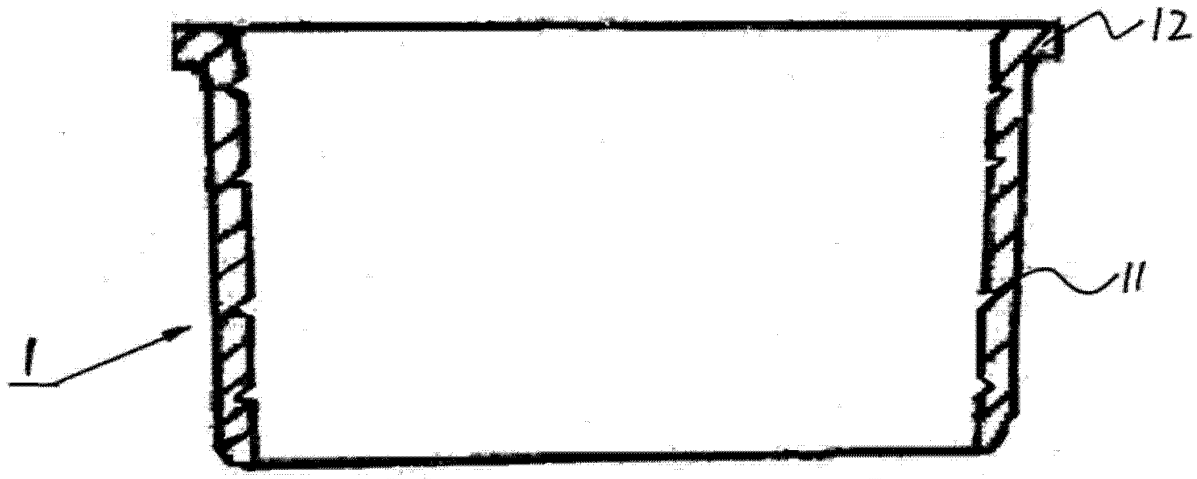

图 1

Electronic Acknowledgement Receipt

EFS ID:	31318533
Application Number:	15035774
International Application Number:	
Confirmation Number:	3999
Title of Invention:	GYRATORY CRUSHER MAIN SHAFT AND ASSEMBLY
First Named Inventor/Applicant Name:	Axel BERGMAN
Customer Number:	78686
Filer:	Corinne R. Gorski
Filer Authorized By:	
Attorney Docket Number:	SC 14208WOUS
Receipt Date:	22-DEC-2017
Filing Date:	11-MAY-2016
Time Stamp:	12:00:08
Application Type:	U.S. National Stage under 35 USC 371

Payment information:

Submitted with Payment	no

File Listing:

Document Number	Document Description	File Name	File Size(Bytes)/ Message Digest	Multi Part /.zip	Pages (if appl.)
1	Information Disclosure Statement (IDS) Form (SB08)	14208WOUSIDS2.pdf	612262 8508dc4ba627065c4825b66132c8d9cfc595e859	no	4

Warnings:

Information:					
A U.S. Publication Number Citation is required in the Information Disclosure Statement (IDS) form. You may remove the form to add the required data in order to correct the Informational Message or if you chose not to, the image of the form will be processed and be made available within the Image File Wrapper (IFW) system. However, no data will be extracted from this form. Any additional data such as Foreign Patent Documents or Non Patent Literature will be manually reviewed and keyed into USPTO systems.					
2	Foreign Reference	CN201179454.pdf	7159225 d1e8e9bea8da12b5cb6d6d75e3196239fff3ec07	no	7
Warnings:					
Information:					
3	Foreign Reference	CN201431896.pdf	4575509 ddb47012d6fa6f75c5ed2578b15f7f3652d6f541	no	6
Warnings:					
Information:					
4	Foreign Reference	CN201807388.pdf	7778727 ae67444e9814f5b629a99fb14d0c0a49fe3bf75e	no	9
Warnings:					
Information:					
5	Foreign Reference	CN203170383.pdf	246623 04fd2917b2e4cf8379be26094d22d7516e50d408	no	6
Warnings:					
Information:					
			Total Files Size (in bytes):	20372346	

This Acknowledgement Receipt evidences receipt on the noted date by the USPTO of the indicated documents, characterized by the applicant, and including page counts, where applicable. It serves as evidence of receipt similar to a Post Card, as described in MPEP 503.

New Applications Under 35 U.S.C. 111

If a new application is being filed and the application includes the necessary components for a filing date (see 37 CFR 1.53(b)-(d) and MPEP 506), a Filing Receipt (37 CFR 1.54) will be issued in due course and the date shown on this Acknowledgement Receipt will establish the filing date of the application.

National Stage of an International Application under 35 U.S.C. 371

If a timely submission to enter the national stage of an international application is compliant with the conditions of 35 U.S.C. 371 and other applicable requirements a Form PCT/DO/EO/903 indicating acceptance of the application as a national stage submission under 35 U.S.C. 371 will be issued in addition to the Filing Receipt, in due course.

New International Application Filed with the USPTO as a Receiving Office

If a new international application is being filed and the international application includes the necessary components for an international filing date (see PCT Article 11 and MPEP 1810), a Notification of the International Application Number and of the International Filing Date (Form PCT/RO/105) will be issued in due course, subject to prescriptions concerning national security, and the date shown on this Acknowledgement Receipt will establish the international filing date of the application.

Doc code: IDS
Doc description: Information Disclosure Statement (IDS) Filed

PTO/SB/08a (01-10)
Approved for use through 07/31/2012. OMB 0651-0031
U.S. Patent and Trademark Office; U.S. DEPARTMENT OF COMMERCE
Under the Paperwork Reduction Act of 1995, no persons are required to respond to a collection of information unless it contains a valid OMB control number.

INFORMATION DISCLOSURE STATEMENT BY APPLICANT

(Not for submission under 37 CFR 1.99)

Application Number	15035774
Filing Date	2016-05-11
First Named Inventor	ERIKSSON
Art Unit	
Examiner Name	
Attorney Docket Number	SMRT 14208WOUS

U.S.PATENTS Remove

Examiner Initial*	Cite No	Patent Number	Kind Code[1]	Issue Date	Name of Patentee or Applicant of cited Document	Pages,Columns,Lines where Relevant Passages or Relevant Figures Appear
	1					

If you wish to add additional U.S. Patent citation information please click the Add button. Add

U.S.PATENT APPLICATION PUBLICATIONS Remove

Examiner Initial*	Cite No	Publication Number	Kind Code[1]	Publication Date	Name of Patentee or Applicant of cited Document	Pages,Columns,Lines where Relevant Passages or Relevant Figures Appear
	1					

If you wish to add additional U.S. Published Application citation information please click the Add button. Add

FOREIGN PATENT DOCUMENTS Remove

Examiner Initial*	Cite No	Foreign Document Number[3]	Country Code[2] i	Kind Code[4]	Publication Date	Name of Patentee or Applicant of cited Document	Pages,Columns,Lines where Relevant Passages or Relevant Figures Appear	T[5]
	1	87056	SU	A1	1949-11-30	KIRICHENKO ET AL		X
	2	9715395	WO	A1	1997-05-01	RUOKONEN ET AL		☐

If you wish to add additional Foreign Patent Document citation information please click the Add button Add

NON-PATENT LITERATURE DOCUMENTS Remove

INFORMATION DISCLOSURE STATEMENT BY APPLICANT

(Not for submission under 37 CFR 1.99)

Application Number	15035774
Filing Date	2016-05-11
First Named Inventor	ERIKSSON
Art Unit	
Examiner Name	
Attorney Docket Number	SMRT 14208WOUS

Examiner Initials*	Cite No	Include name of the author (in CAPITAL LETTERS), title of the article (when appropriate), title of the item (book, magazine, journal, serial, symposium, catalog, etc), date, pages(s), volume-issue number(s), publisher, city and/or country where published.	T[5]
	1		

If you wish to add additional non-patent literature document citation information please click the Add button Add

EXAMINER SIGNATURE

Examiner Signature		Date Considered	

*EXAMINER: Initial if reference considered, whether or not citation is in conformance with MPEP 609. Draw line through a citation if not in conformance and not considered. Include copy of this form with next communication to applicant.

[1] See Kind Codes of USPTO Patent Documents at www.USPTO.GOV or MPEP 901.04. [2] Enter office that issued the document, by the two-letter code (WIPO Standard ST.3). [3] For Japanese patent documents, the indication of the year of the reign of the Emperor must precede the serial number of the patent document. [4] Kind of document by the appropriate symbols as indicated on the document under WIPO Standard ST.16 if possible. [5] Applicant is to place a check mark here if English language translation is attached.

INFORMATION DISCLOSURE STATEMENT BY APPLICANT

(Not for submission under 37 CFR 1.99)

Application Number	15035774
Filing Date	2016-05-11
First Named Inventor	ERIKSSON
Art Unit	
Examiner Name	
Attorney Docket Number	SMRT 14208WOUS

CERTIFICATION STATEMENT

Please see 37 CFR 1.97 and 1.98 to make the appropriate selection(s):

☒ That each item of information contained in the information disclosure statement was first cited in any communication from a foreign patent office in a counterpart foreign application not more than three months prior to the filing of the information disclosure statement. See 37 CFR 1.97(e)(1).

OR

☐ That no item of information contained in the information disclosure statement was cited in a communication from a foreign patent office in a counterpart foreign application, and, to the knowledge of the person signing the certification after making reasonable inquiry, no item of information contained in the information disclosure statement was known to any individual designated in 37 CFR 1.56(c) more than three months prior to the filing of the information disclosure statement. See 37 CFR 1.97(e)(2).

See attached certification statement.

The fee set forth in 37 CFR 1.17 (p) has been submitted herewith.

A certification statement is not submitted herewith.

SIGNATURE

A signature of the applicant or representative is required in accordance with CFR 1.33, 10.18. Please see CFR 1.4(d) for the form of the signature.

Signature	/Corinne Gorski/	Date (YYYY-MM-DD)	2018-05-14
Name/Print	Corinne Gorski	Registration Number	34339

This collection of information is required by 37 CFR 1.97 and 1.98. The information is required to obtain or retain a benefit by the public which is to file (and by the USPTO to process) an application. Confidentiality is governed by 35 U.S.C. 122 and 37 CFR 1.14. This collection is estimated to take 1 hour to complete, including gathering, preparing and submitting the completed application form to the USPTO. Time will vary depending upon the individual case. Any comments on the amount of time you require to complete this form and/or suggestions for reducing this burden, should be sent to the Chief Information Officer, U.S. Patent and Trademark Office, U.S. Department of Commerce, P.O. Box 1450, Alexandria, VA 22313-1450. DO NOT SEND FEES OR COMPLETED FORMS TO THIS ADDRESS. **SEND TO: Commissioner for Patents, P.O. Box 1450, Alexandria, VA 22313-1450.**

Privacy Act Statement

The Privacy Act of 1974 (P.L. 93-579) requires that you be given certain information in connection with your submission of the attached form related to a patent application or patent. Accordingly, pursuant to the requirements of the Act, please be advised that: (1) the general authority for the collection of this information is 35 U.S.C. 2(b)(2); (2) furnishing of the information solicited is voluntary; and (3) the principal purpose for which the information is used by the U.S. Patent and Trademark Office is to process and/or examine your submission related to a patent application or patent. If you do not furnish the requested information, the U.S. Patent and Trademark Office may not be able to process and/or examine your submission, which may result in termination of proceedings or abandonment of the application or expiration of the patent.

The information provided by you in this form will be subject to the following routine uses:

1. The information on this form will be treated confidentially to the extent allowed under the Freedom of Information Act (5 U.S.C. 552) and the Privacy Act (5 U.S.C. 552a). Records from this system of records may be disclosed to the Department of Justice to determine whether the Freedom of Information Act requires disclosure of these record s.

2. A record from this system of records may be disclosed, as a routine use, in the course of presenting evidence to a court, magistrate, or administrative tribunal, including disclosures to opposing counsel in the course of settlement negotiations.

3. A record in this system of records may be disclosed, as a routine use, to a Member of Congress submitting a request involving an individual, to whom the record pertains, when the individual has requested assistance from the Member with respect to the subject matter of the record.

4. A record in this system of records may be disclosed, as a routine use, to a contractor of the Agency having need for the information in order to perform a contract. Recipients of information shall be required to comply with the requirements of the Privacy Act of 1974, as amended, pursuant to 5 U.S.C. 552a(m).

5. A record related to an International Application filed under the Patent Cooperation Treaty in this system of records may be disclosed, as a routine use, to the International Bureau of the World Intellectual Property Organization, pursuant to the Patent Cooperation Treaty.

6. A record in this system of records may be disclosed, as a routine use, to another federal agency for purposes of National Security review (35 U.S.C. 181) and for review pursuant to the Atomic Energy Act (42 U.S.C. 218(c)).

7. A record from this system of records may be disclosed, as a routine use, to the Administrator, General Services, or his/her designee, during an inspection of records conducted by GSA as part of that agency's responsibility to recommend improvements in records management practices and programs, under authority of 44 U.S.C. 2904 and 2906. Such disclosure shall be made in accordance with the GSA regulations governing inspection of records for this purpose, and any other relevant (i.e., GSA or Commerce) directive. Such disclosure shall not be used to make determinations about individuals.

8. A record from this system of records may be disclosed, as a routine use, to the public after either publication of the application pursuant to 35 U.S.C. 122(b) or issuance of a patent pursuant to 35 U.S.C. 151. Further, a record may be disclosed, subject to the limitations of 37 CFR 1.14, as a routine use, to the public if the record was filed in an application which became abandoned or in which the proceedings were terminated and which application is referenced by either a published application, an application open to public inspections or an issued patent.

9. A record from this system of records may be disclosed, as a routine use, to a Federal, State, or local law enforcement agency, if the USPTO becomes aware of a violation or potential violation of law or regulation.

PCT WORLD INTELLECTUAL PROPERTY ORGANIZATION
International Bureau

INTERNATIONAL APPLICATION PUBLISHED UNDER THE PATENT COOPERATION TREATY (PCT)

(51) International Patent Classification 6 : B02C 2/04	A1	**(11) International Publication Number:**	**WO 97/15395**
		(43) International Publication Date:	1 May 1997 (01.05.97)

(21) International Application Number: PCT/FI96/00561

(22) International Filing Date: 23 October 1996 (23.10.96)

(30) Priority Data:
955088 25 October 1995 (25.10.95) FI

(71) Applicant *(for all designated States except US)*: NORDBERG-LOKOMO OY [FI/FI]; PL 306, FIN-33101 Tampere (FI).

(72) Inventors; and
(75) Inventors/Applicants *(for US only)*: RUOKONEN, Markku [FI/FI]; Tornitie 4 as. 2, FIN-37500 Lempäälä (FI). AHO, Olli [FI/FI]; Jalmari Finnen katu 9, FIN-33720 Tampere (FI).

(74) Agent: RUSKA & CO. OY; Runeberginkatu 5, FIN-00100 Helsinki (FI).

(81) Designated States: AU, BR, CN, JP, NO, RU, US, European patent (AT, BE, CH, DE, DK, ES, FI, FR, GB, GR, IE, IT, LU, MC, NL, PT, SE).

Published
With international search report.
In English translation (filed in Finnish).

(54) Title: SEALED CRUSHER

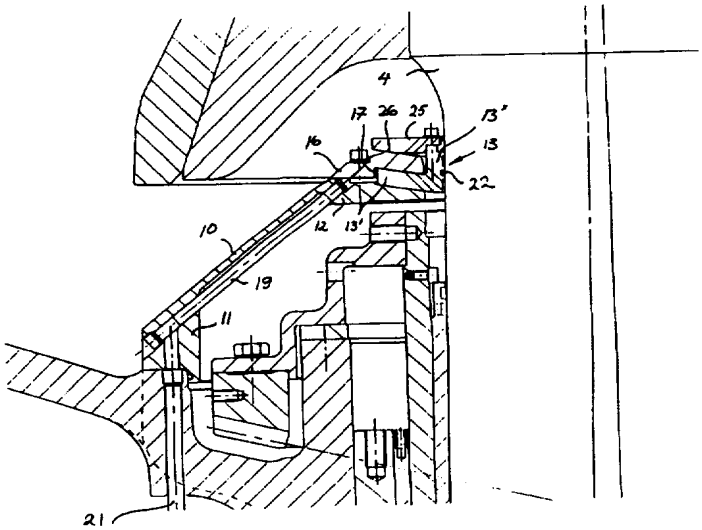

(57) Abstract

A gyratory crusher having a frame (1) and in the frame an eccentric shaft (3) rotatable around a vertical shaft in the frame, with a vertical inclined hole in it. A main shaft (4) is supported by bearings in the hole of the eccentric shaft, a supporting cone (5) being attached to the upper end of said main shaft (4). Around the main shaft, below the supporting cone (5) there is a sealing cover (10) covering the eccentric shaft. The upper edge (12) of the sealing cover (10) is sealed against the main shaft (4) by means of a sealing member (13), the outer edge of which has been fitted in an annular groove (17) on the inner edge (12) of the sealing cover (10). The face-to-face arranged upper and lower surfaces of the part (13'') of the sealing member (13) in the groove and the groove (17) of the sealing cover (10) are inclined so that their outer edges are higher up than their inner edges.

FOR THE PURPOSES OF INFORMATION ONLY

Codes used to identify States party to the PCT on the front pages of pamphlets publishing international applications under the PCT.

AM	Armenia	**GB**	United Kingdom	**MW**	Malawi
AT	Austria	**GE**	Georgia	**MX**	Mexico
AU	Australia	**GN**	Guinea	**NE**	Niger
BB	Barbados	**GR**	Greece	**NL**	Netherlands
BE	Belgium	**HU**	Hungary	**NO**	Norway
BF	Burkina Faso	**IE**	Ireland	**NZ**	New Zealand
BG	Bulgaria	**IT**	Italy	**PL**	Poland
BJ	Benin	**JP**	Japan	**PT**	Portugal
BR	Brazil	**KE**	Kenya	**RO**	Romania
BY	Belarus	**KG**	Kyrgystan	**RU**	Russian Federation
CA	Canada	**KP**	Democratic People's Republic of Korea	**SD**	Sudan
CF	Central African Republic			**SE**	Sweden
CG	Congo	**KR**	Republic of Korea	**SG**	Singapore
CH	Switzerland	**KZ**	Kazakhstan	**SI**	Slovenia
CI	Côte d'Ivoire	**LI**	Liechtenstein	**SK**	Slovakia
CM	Cameroon	**LK**	Sri Lanka	**SN**	Senegal
CN	China	**LR**	Liberia	**SZ**	Swaziland
CS	Czechoslovakia	**LT**	Lithuania	**TD**	Chad
CZ	Czech Republic	**LU**	Luxembourg	**TG**	Togo
DE	Germany	**LV**	Latvia	**TJ**	Tajikistan
DK	Denmark	**MC**	Monaco	**TT**	Trinidad and Tobago
EE	Estonia	**MD**	Republic of Moldova	**UA**	Ukraine
ES	Spain	**MG**	Madagascar	**UG**	Uganda
FI	Finland	**ML**	Mali	**US**	United States of America
FR	France	**MN**	Mongolia	**UZ**	Uzbekistan
GA	Gabon	**MR**	Mauritania	**VN**	Viet Nam

SEALED CRUSHER

TECHNICAL FIELD

The present invention concerns gyratory crushers. More particularly the invention concerns sealing, by means of which the internal parts of the crusher are protected against dust entering from outside.

BACKGROUND ART

Gyratory crushers comprise a vertical eccentric shaft with an inclined inner hole therein. A main shaft, into which a supporting cone is attached, and which is supported to the frame at its upper part by means of an upper supporting bearing, is mounted in the hole. The supporting cone is surrounded on its sides by the frame of the crusher, an element acting as a wearing part called outer crushing head being attached to the frame. An element acting as a wearing part called inner crushing head is attached to the supporting cone. The inner and outer crushing heads, together, form a crushing chamber, where the feed material is crushed. When the eccentric shaft is rotated, the main shaft and, together with it, the supporting cone get to an oscillating movement, whereby the gap between the inner and outer head at each point varies during the working cycle. The smallest gap during the working cycle is called the setting of the crusher, and the difference between the minimum and maximum gap is called the stroke of the crusher.

Through the magnitude of the setting and the stroke of the crusher, i.a. the particle size distribution of the produced crushed material and the production capacity can be influenced.

Presently, a gyratory crusher can be adjusted by means of a hydraulic system, so that the main shaft can be moved vertically in relation to the frame. This makes it possible to change the setting so that the size of the final product corresponds to the desired one and/or to maintain the same setting when the crushing heads wear.

Dust particles and other foreign objects from the crushing chamber must be prevented from entering the bearings of the

eccentric shaft and the main shaft, as well as the primary and secondary gear of the drive device, and in general the lubricant circuit inside the crusher, and through that the surfaces of the elements to be lubricated.

In the crushers of prior art, generally used presently, there is for this purpose a sealing cover around the eccentric shaft and the drive devices connected with it, attached at its lower edge to the frame, and above it as an extension a narrower cylindrical supporting sleeve for the sealing. For the upper edge of the supporting sleeve, there is an annular recess formed in the lower surface of the supporting cone. The outer surface of the supporting sleeve forms a sealing surface, against which a seal ring in the recess of the supporting cone is pressed. The seal ring glides in its recess in relation to the supporting cone along a spherical surface. In addition, when the setting of the crusher is adjusted, the seal ring glides up and down along the surface of the supporting sleeve. The ring can also glide around the supporting sleeve against the surface of the sleeve.

The most essential drawback of this prior art is that the recesses and grooves formed in the supporting cone for sealing members make the supporting cone weaker. Other drawbacks of the prior art are the complicated shape of the lower surface of the supporting cone - and thus high production costs - as well as the fast wearing of the seal ring caused by the required great movement of the seal ring.

Because in these constructions known in the art, the sealing member rises or lowers with the main shaft of the crusher when the vertical position of the main shaft is adjusted, the consequence is that also its distance from the upper supporting bearing, that is its radius of oscillation changes. For this reason, it has been necessary to dimension the sealing against the cone in this structure as a compromise between different radii of oscillation, and some clearance has been reserved to it for extreme positions.

In publication DE 673 351, there has been described a crusher, in which the sealing cover is sealed against the main shaft so, that the outer edge of a horizontal sealing member has been fitted in an internal recess provided in the upper

part of the sealing cover. A drawback of this known solution is, however, that little by little the oscillating movement of the main shaft causes the sealing to break, even if it is made of flexible material. Alternatively, big clearances must be used, whereby the tightness of the construction will be lost.

In publication DE 1 243 955, there is described a crusher, in which the lower surface of the outer edge of a sealing member between the main shaft and the sealing cover is fitted tightly against the frame of the crusher. In case the main shaft is lifted upwards in order to change the setting, the sealing member departs from the surface of the crusher frame.

Publication DE 1 507 573 discloses a crusher, in which the sealing members between the main shaft and the sealing cover are completely unprotected from above, and thus subject to dust, whereby the surfaces wear very quickly. It is also not unambiguously clear from the publication, how the sealing cover and the sealing member remain in position when the setting is changed.

DISCLOSURE OF THE INVENTION

General description

What has now been invented, is a crusher in accordance with claim 1. Some preferred embodiments of the invention are described in other claims.

The most essential feature of the invention is that the sealing cover is sealed against the main shaft, and shaped so as not to be broken by the oscillating movement of the main shaft. The tightness will also be maintained when the setting of the crusher is changed, because the sealing cover and the sealing member do not move in relation to the frame when the setting of the crusher is changed. Also the sealing itself is protected against dust.

A further advantage of the structure in accordance with the present invention is that the supporting cone can be made stronger, as there is no need to make any recess for the supporting sleeve of the sealing. In addition, the supporting cone is more easily manufactured. The lower surface of the supporting cone can be even left as a cast surface, and no

smooth machined surface is required on it, against which the sealing would be fitted, as in the structures of prior art. The sealing structure is also in other respects simpler and more economical and secure than the known solutions.

As the sealing has been moved from the sealing sleeve inwards against the main shaft, the circumference of the circle where the sealing is effected is shorter. For this reason, also the required sealing member is smaller. Also the speed of the movement of the sealing member - and thereby the wearing of the sealing member - is reduced.

As in the solution in accordance with the invention there is always oil in the space below the sealing member, providing the lubrication of the bearings of the crusher, the same oil is also provided on the surface of the main shaft below the sealing member. As the main shaft, along with the wearing of the crushing heads, as a rule must be raised, the sealing member always receives clean oil free of dust, thus preventing the wearing of the sealing member.

In a structure in accordance with the present invention, the main shaft glides in relation to the sealing member, when the vertical position of the main shaft is adjusted, whereby the radius of oscillation is independent of the position of the main shaft and always constant. Therefore the sealing member can be positioned with an optimal clearance or even without any clearance, whereby also its sealing effect is good.

The sealing of the internal circumference of the sealing member can be improved by placing one separate sealing or a plurality of individual sealings between the internal circumference and the main shaft. In this way, also the wearing of the internal circumference of the sealing member can be reduced.

In the structure in accordance with the present invention, the balancing of the crusher can also be easily provided without increasing the height of the crusher, because in the structure in accordance with the invention, there will be more space vacant for the counter weight. The space vacant below the supporting cone can be utilised, and the counter weight can be constructed correctly for every stroke.

It is also known to use compressed air in crushers to prevent dust from entering on the sealing member and therefrom further the bearings of the machine. In the structure in accordance with the invention, it is possible to provide the sealing cover with a channel, and bring the compressed air directly to the sealing.

Description of drawings

Enclosed drawings form a part of the description of the invention.

Figure 1 illustrates one gyratory crusher in accordance with the present invention.

Figure 2 shows an enlarged detail of the crusher of figure 1.

Figure 3 shows as enlarged an alternative embodiment of the detail of figure 1.

Examples

The main parts of the crusher of figure 1 are a frame 1, a transmission mechanism 2, an eccentric shaft 3, a main shaft 4 and a supporting cone 5 arranged on the main shaft.

An outer crushing head attached to the upper part of the frame 1 and an inner crushing head attached to the supporting cone 5 form a crushing chamber. To the lower part of the frame there is arranged the transmission mechanism 2, by means of which the eccentric shaft 3 is rotated.

The lower end of the main shaft 4 is via bearings 6 supported to an adjusting piston 7 arranged at the lower part of the frame 1. By leading pressure medium into a cylinder below the adjusting piston or from the cylinder, the main shaft can be raised or lowered in relation to the frame.

The upper end of the eccentric shaft 3 is provided with a pole ring 8 with counter weights. The lower edge of the pole ring is provided with a bevel gear 9.

The eccentric shaft 3 is covered with a sealing cover 10. The skirt 11 of the outer edge of the sealing cover is tightly fixed to the lower part of the crusher frame 1. The inner edge 12 is sealed against the main shaft 4 by means of a sealing member 13. The sealing member can be shaped e.g. as shown in the drawings.

The sealing cover is dimensioned so that between the main

shaft and the inner edge of the sealing cover there is left a space or a groove required by the sealing member.

The outer surface of the sealing cover 10 is inclined downwards and outwards. Thus, no crushed stone is gathered upon it.

In figure 2, the structure of the sealing member is shown in more detail. The sealing member 13 is formed of a flangelike part 13' and of a sleevelike part 13" within it, extending upwards from the inner edge of the flangelike part.

Against the inner circumference of the sealing member 13, there can be a cylindrical protective sleeve 14 pressing tightly against the main shaft.

The inner edge 12 of the sealing cover 10 forms an annular flange. A fixing ring 16 is arranged above the flange so that a groove 17 is formed between for the sealing member 13. The groove has a form of the sealing member, but it is sideways wider than it, so the upper and lower surfaces of the flange part 13' of the sealing member 13 set tightly against the groove, but, however, can move sideways in it along the movement of the main shaft 4.

The face to face arranged upper and lower surfaces of the groove 17 of the sealing cover 10 and the flangelike part 13' of the sealing member are parts of a spherical surface, the centre of which is the centre of the oscillating movement of the main shaft at the upper end of the main shaft 4.

On top of the fixing ring 16 of the sealing member there is, in addition, a protective ring 18 made of some elastic material.

A channel 19 is formed in the sealing cover 10, the main part of which is parallel with the cover and joins a channel 20 of the fixing ring 16, which again opens at the lower surface of the fixing ring against the sealing member 13. Through the channels 19, 20, compressed air can be blown to the sealing member from a pipe 21, for removing dust from the upper surface of the sealing member 13 gliding against the groove 17.

In addition, the sealing member 13 can be provided with one or several separate seal rings 22, 23 which seal the gap between the sealing member and the main shaft or the sealing

member and the protective sleeve 14. The seal ring 23 can be a changeable, elastic ring, that scrapes the main shaft when the main shaft is raised and lowered.

When the main shaft 4 is making its oscillating movement, the centre of mass of the main shaft and the masses fastened to it changes its position. Therefore the masses connected with the pole ring 8 of the eccentric shaft of the crusher must be dimensioned so as to balance the forces caused by the movement of the main shaft and the centre of mass of the masses connected with it, and thus decrease the swinging of the crusher.

With different stroke movements, the path of movement of the main shaft and the centre of mass of the masses connected with it is different. For this reason, the position or magnitude of the masses connected with the pole ring of the eccentric shaft should be adjustable. In a structure in accordance with the invention, more room will be left above the pole ring 8 and thus detachable or adjustable counter weights 24 (figure 1) can be attached to the pole ring, and these counter weights can be added, removed or moved according to need in order to balance the crusher with different stroke movements.

The protective ring 18 can be also replaced e.g. with a rubber bellow. This kind of a rubber bellow can extend to be tightly against the protective sleeve 14 or the main shaft 4 itself.

Figure 3 illustrates an alternative embodiment of the sealing arrangement. There the elastic protective ring 18 on top of the fixing ring 16 has been replaced by a protective ring 25 which is attached to the sealing element 13 so, that the lower surface of the protective ring is in contact with the protective cover. The contact surface 26 between the sealing member and the protective ring is conical or a part of a spherical surface.

Thus, the protective ring oscillating with the seal ring maintains its contact with the fixing ring 16. The protective ring 25 is attached to the upper surface of the sleeve part 13" of the sealing member, whereby it properly also protects the seal ring from dust.

In the embodiments of both the figure 2 and figure 3, the upper and lower surfaces of the sealing member 13 and the groove 17 do not necessarily have to be exactly spherical surfaces, but also slightly inclined conical surfaces following closely to these kinds of spherical surfaces can be used.

Because the distance between the sealing member and the centre of the oscillating movement of the main shaft is in practice long compared with the length of the flangelike part 13' of the sealing member, the spherical surfaces of the face to face upper and lower surfaces of the groove 17 of the sealing cover 10 and the flangelike part 13' of the sealing member can be replaced by conical surfaces forming with the centre axis of the crusher an angle which is smaller than 90°. It is essential that the outer surfaces of both the groove 17 of the sealing cover 10 and the flangelike part 13' of the sealing member are higher up than their inner edges.

The sealing member can also be shaped so that there is no sleevelike part 13" in it. Thereby the separate seal rings 22, 23 can be arranged in a narrow area on the inner edge of the sealing member.

CLAIMS

A gyratory crusher having

- a frame (1)
- an eccentric shaft (3) rotatable around a vertical axis in the frame, with a vertical inclined hole therein,
- a main shaft (4) supported by bearings in the hole of the eccentric shaft, said main shaft comprising an upper end extending above the eccentric shaft, and a supporting cone (5) attached and supported thereto, and
- arranged around the main shaft, below the supporting cone (5), a sealing cover (10) covering the eccentric shaft, said sealing cover having an inner edge (12) and an outer edge (11) fastened tightly to the frame,

whereby the inner edge (12) of the sealing cover (10) is sealed against the main shaft (4) with a sealing member (13) fitted in an annular groove (17) on the inner edge (12) of the sealing cover (10) or between the sealing cover and a fixing ring (16) on top of it, said groove having the shape of the sealing member, but being sideways wider than it,

characterized in that the upper and lower surfaces of both said groove (17) and the part (13') of the sealing member (13) arranged in said groove are inclined in such a way that their outer edges are higher up than their inner edges.

2. A gyratory crusher in accordance with claim 1, **characterized** in that the face to face arranged upper and lower surfaces of the part (13') of the sealing member (13) located in the groove, and the groove (17) of the sealing cover (10) are parts of such a spherical surface, the centre of which is the centre of the oscillating movement of the main shaft (4) at the upper end of the main shaft.

3. A gyratory crusher in accordance with claim 1 or 2, **characterized** in that the sealing member (13) consists of a flangelike part (13') and a sleevelike part (13") within it.

4. A gyratory crusher in accordance with any of the claims from 1 to 3, **characterized** in that the inner edge (12) of the sealing cover (10) is sealed against the main shaft (4) via a protective sleeve (14) fitted tightly against the main shaft (4).

5. A gyratory crusher in accordance with any of the claims

from 1 to 4, **characterized** in that between the sealing member (13) and the main shaft (4) there is at least one changeable seal ring (22).

6. A gyratory crusher in accordance with any of the claims from 1 to 5, **characterized** in that between the sealing member (13) and the main shaft (4) there is a changeable elastic ring (23), that scrapes the main shaft when the main shaft is raised or lowered.

7. A gyratory crusher in accordance with any of the claims from 1 to 6, **characterized** in that there is a channel (19) in the sealing cover (10), one end of which is joins a compressed air pipe (21) arranged outside the crushing chamber, and the other end of which opens onto the sealing member (13).

8. A gyratory crusher in accordance with claim 7, **characterized** in that the other end of the channel (19) opens onto the sealing member (13) via a channel (20) arranged in a fixing ring (16) of the sealing member.

9. A gyratory crusher in accordance with any of the claims from 1 to 8, **characterized** in that the lower surface of the supporting cone (5) is entirely a cast surface.

10. A gyratory crusher in accordance with any of the claims from 1 to 9, **characterized** in that the lower surface of the supporting cone (5) is without a recess machined in it for the sealing.

11. A gyratory crusher in accordance with any of the claims from 1 to 10, **characterized** in that one or several detachable or adjustable counter weights (24) have been attached to a pole ring (8) on the upper end of the eccentric shaft (3).

12. A gyratory crusher in accordance with any of the claims from 1 to 11, **characterized** in that a protective cover (25) is arranged on top of the sealing member (13) and the fixing ring (16) whereby the contact surfaces (26) between the fixing ring (16) and the protective cover (25) are inclined in such a way that their outer edges are higher up than their inner edges.

FIG. 1

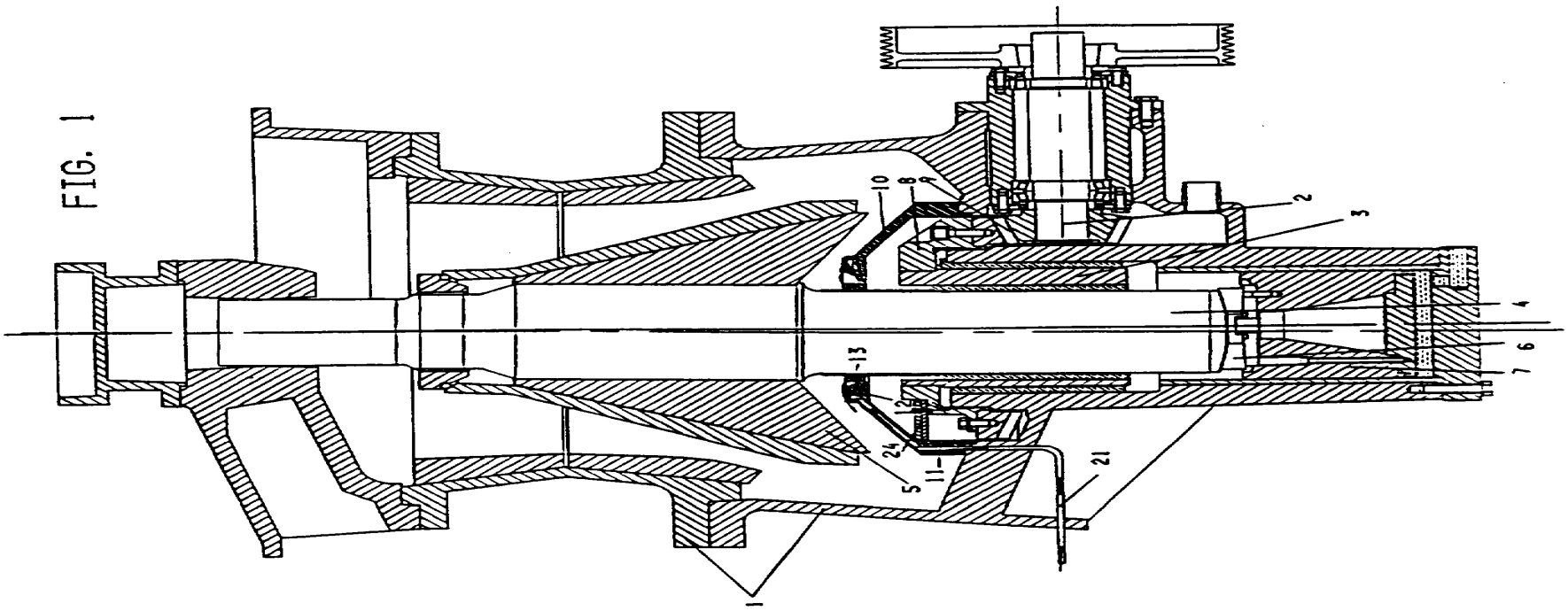

FIG. 2

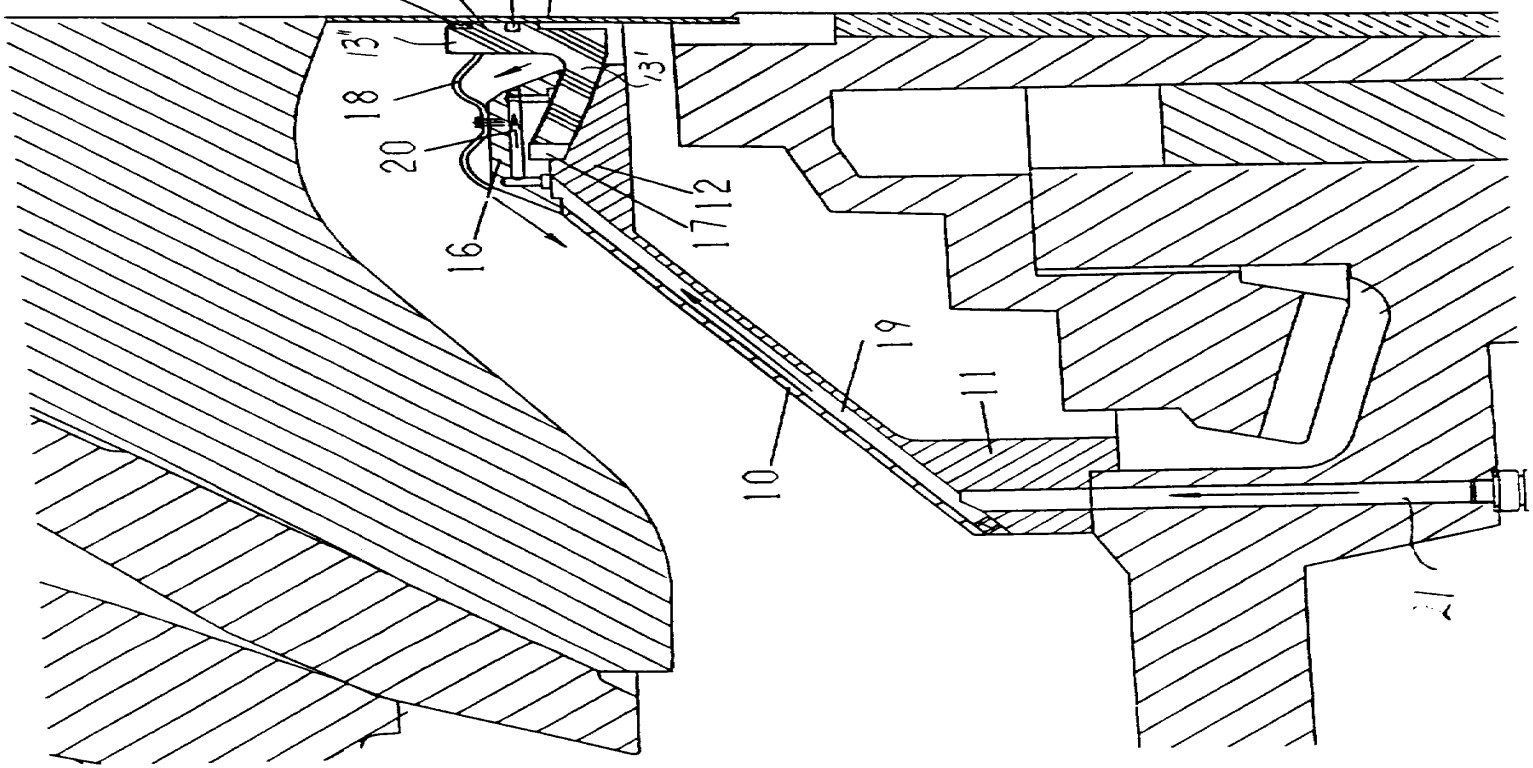

Fig. 3

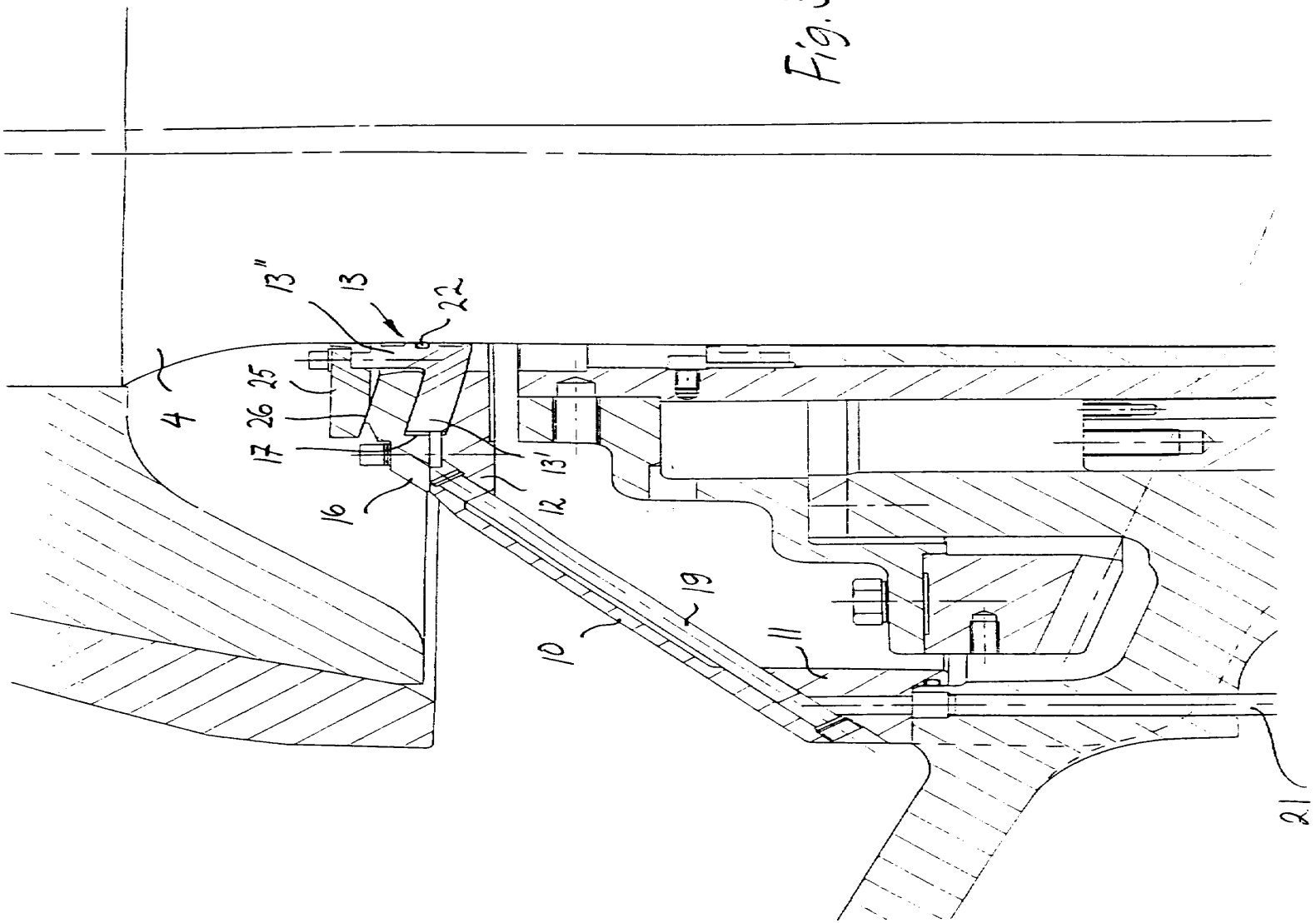

INTERNATIONAL SEARCH REPORT

International application No.
PCT/FI 96/00561

A. CLASSIFICATION OF SUBJECT MATTER

IPC6: B02C 2/04
According to International Patent Classification (IPC) or to both national classification and IPC

B. FIELDS SEARCHED

Minimum documentation searched (classification system followed by classification symbols)

IPC6: B02C

Documentation searched other than minimum documentation to the extent that such documents are included in the fields searched

SE,DK,FI,NO classes as above

Electronic data base consulted during the international search (name of data base and, where practicable, search terms used)

C. DOCUMENTS CONSIDERED TO BE RELEVANT

Category*	Citation of document, with indication, where appropriate, of the relevant passages	Relevant to claim No.
Y	DE 673351 C (ESCH-WERKE KOMM.-GES., MASCHINENFABRIK U. EISENGIESSEREI), 2 March 1939 (02.03.39), the figure --	1,2,4
Y	DE 1243955 B (EISENWERK WESERHÜTTE AKTIENGESELLSCHAFT), 6 July 1967 (06.07.67), column 3, line 44 - line 47, figure 1 --	1,2
Y	DE 1507573 C (KLÖCKNER-HUMBOLDT-DEUTZ AG), 17 Sept 1970 (17.09.70), figure 3 -- --------	4

☐ Further documents are listed in the continuation of Box C. ☒ See patent family annex.

* Special categories of cited documents:
"A" document defining the general state of the art which is not considered to be of particular relevance
"E" erlier document but published on or after the international filing date
"L" document which may throw doubts on priority claim(s) or which is cited to establish the publication date of another citation or other special reason (as specified)
"O" document referring to an oral disclosure, use, exhibition or other means
"P" document published prior to the international filing date but later than the priority date claimed
"T" later document published after the international filing date or priority date and not in conflict with the application but cited to understand the principle or theory underlying the invention
"X" document of particular relevance: the claimed invention cannot be considered novel or cannot be considered to involve an inventive step when the document is taken alone
"Y" document of particular relevance: the claimed invention cannot be considered to involve an inventive step when the document is combined with one or more other such documents, such combination being obvious to a person skilled in the art
"&" document member of the same patent family

Date of the actual completion of the international search	Date of mailing of the international search report
24 January 1997	03 -02- 1997
Name and mailing address of the ISA/ Swedish Patent Office Box 5055, S-102 42 STOCKHOLM Facsimile No. +46 8 666 02 86	Authorized officer Wiva Asplund Telephone No. +46 8 782 25 00

INTERNATIONAL SEARCH REPORT

Information on patent family members

28/10/96

International application No.
PCT/FI 96/00561

Patent document cited in search report	Publication date	Patent family member(s)	Publication date
DE-C- 673351	02/03/39	NONE	
DE-B- 1243955	06/07/67	NONE	
DE-C- 1507573	17/09/70	NONE	

Patent Translate
Powered by EPO and Google

Notice

This translation is machine-generated. It cannot be guaranteed that it is intelligible, accurate, complete, reliable or fit for specific purposes. Critical decisions, such as commercially relevant or financial decisions, should not be based on machine-translation output.

DESCRIPTION SU87056

Gyratory crusher

The invention relates to gyratory crushers with an axle support. Allowing to regulate the position of crushing cones fixed on an axis, with respect to fixed crushing surfaces. A distinctive feature of the described crusher is the construction of the support-axis, filled in the form of a cylinder with a port on which the axle bearing is located, and the cylinder is filled with oil.

In order to regulate the position of the crushing cones, the cylinder is connected to a hydraulic system that allows changing the amount of oil in the cylinder.

The figure shows a vertical section of a crusher consisting of a cylindrical body J on which a thicket 2 is fixed. In the upper part of the thicket 2 passes into the beam carrying a self-aligning sliding BEARING for perceiving the radial forces of the crushing cones 3 and forming the receiving holes 4 for loading the crusher. . Above the traverse is covered with a cover 5. The thicket and crushing head are made-with respect to crushing in two stages. The working surfaces are covered with a lining, and the lining design provides the possibility of an independent lining scheme for the first and second stages of crushing.

To the inner cylinder of the body / the crankcase 6 is fixed from below and from the top - the cover 7, forming a closed space for the built-in electric motor with an eccentric. The stator 8 of the motor is fixed in the crust, the crusher's chuck from cranking by the scoops. The rotor 9 of the motor on the inside has a flange protrusion to which an eccentric sleeve 10 is fastened by screws, consisting of two halves in length and forming a hollow motor shaft. Carter 6 and the top cover 7

with bronzed bushings in them with the flanged-and-beads formed in them form sliding podschipniki the motor. The bushing / O in a spherical internal boring, eccentric with respect to its cylindrical outer surface, carries a self-aligning insert II, fixed by a pivot from turning. The said insert forms a second radial podschipnik of the crushing cones 5.

In the lower part, the casing 6 is covered by a lid 12, forming a working cylinder 13, in which a plunger 14 is placed, bearing a backpack No. 87056-- 2 -

nickname 15 for the perception of the vertical component - the force of crushing and the weight of the crushing head. The plunger 14 is supported at a certain height by the oil of the nozzle by the pressure entering the opening 16 from the hydraulic automatics system.

To the plunger 14, by means of a self-aligning connection, a piston 17 is attached to the cylindrical opening in the lid 12.

On the upper end of the lid 7, a disk with an opening for passing the shaft of the crushing cones 3 is placed freely. This disk is intended for the damping of intense oil sprays generated by the processional motion of the shaft of the crushing head. A disc with a collar 19 is attached to the lid 7, forming a chamber that removes the leaking oil onto the disc into the oil collecting ring channel in the upper lid 7.

Dust protection ring 20 is made of special rubber (or leather) and serves to prevent the penetration of dust into the space of rubbing lubricated surfaces.

Casing 21 and ring 22 serve to prevent the penetration of oil mist into the area of the stator winding.

The inner cylinder of the body / in the middle part has appropriate grooves that allow cooling the stator of the motor. The oil supply to the cooling is made under pressure in the hole 23. Oil is drained through the openings 24.

The crusher is driven by a built-in electric motor, organically connected with the eccentric of the crusher.

The size of the crushing is regulated by the hydraulic system by pumping the oil through the hole 16 into the cylinder 13 under the plunger 14.

Received oil under the plunger will cause a rise in the luner, and with it of the crushing cones 3. At the same time, the gap between the lining will decrease.

Per) The first adjustment of the crushing, as well as the operational adjustment as the lining wears, is pumped through the same hydraulic system in the hole 25, under the piston 17.

The advantage of this crusher is the ease of adjusting the position of the crushing cones.

OBJECT

1.

Gyratory crusher with support for the axis, which allows to regulate the position of crushing, strengthened on the axis in relation to fixed crushing surfaces, characterized in that the support is made in the form of a cylinder with a port on which the axle bearing is located, and the cylinder is filled with oil.

2.

A gyratory crusher according to claim 1, characterized in that the cylinder is connected to a hydraulic system, which allows changing the amount of oil in the cylinder when adjusting the position of the crushing cones.

Класс 50с, 2_{01} № 87056

СССР

ВСЕСОЮЗНАЯ ПАТЕНТНО-ТЕХНИЧЕСКАЯ

ОПИСАНИЕ ИЗОБРЕТЕНИЯ

К АВТОРСКОМУ СВИДЕТЕЛЬСТВУ

А. И. Кириченко и К. А. Рундквист

ГИРАЦИОННАЯ ДРОБИЛКА

Заявлено 26 июля 1949 г. за № 402598
в Гостехнику СССР

Изобретение относится к гирационным дробилкам с опорой для оси, позволяющей регулировать положение дробящих конусов, укрепленных на оси, по отношению к неподвижным дробящим поверхностям.

Отличительная особенность описываемой дробилки состоит в конструкции опоры оси, выполненной в виде цилиндра с поршнем, на котором расположен подпятник оси, а цилиндр заполнен маслом.

С целью регулирования положения дробящих конусов цилиндр соединен с гидравлической системой, позволяющей изменять количество масла в цилиндре.

На чертеже изображен вертикальный разрез дробилки, состоящей из цилиндрического корпуса *1*, на котором крепится чаша *2*. В верхней части чаша *2* переходит в траверзу, несущую самоустанавливающийся скользящий подшипник для восприятия радиальных усилий дробящих конусов *3* и образующую приемные отверстия *4* для загрузки дробилки. Сверху траверза прикрывается крышкой *5*. Чаша и дробящая голова выполнены применительно к дроблению в две стадии. Рабочие поверхности покрываются футеровкой, причем конструкция футеровки предусматривает возможность независимой схемы футеровок первой и второй стадии дробления.

К внутреннему цилиндру корпуса *1* крепятся снизу картер *6* и сверху — крышка *7*, образующие закрытое пространство для встроенного электромотора с эксцентриком. Статор *8* мотора закрепляется в корпусе дробилки от проворачивания шпонками. Ротор *9* мотора с внутренней стороны имеет фланцевый выступ, к которому винтами крепится эксцентриковая втулка *10*, состоящая из двух половин по длине и образующая собой полый вал мотора. Картер *6* и верхняя крышка *7* с запрессованными в них бронзовыми втулками с фланцевыми буртиками образуют скользящие подшипники мотора. Втулка *10* в сферической внутренней расточке, эксцентричной по отношению к внешней цилиндрической ее поверхности, несет самоустанавливающийся вкладыш *11*, закрепленный шпонкой от проворачивания. Указанный вкладыш образует второй радиальный подшипник дробящих конусов *3*.

В нижней части картер *6* прикрывается крышкой *12*, образуя рабочий цилиндр *13*, в котором помещается плунжер *14*, несущий подпят-

ник *15* для восприятия вертикальной составляющей усилия дробления и веса дробящей головы. Плунжер *14* поддерживается на определенной высоте маслом под давлением, поступающим в отверстие *16* от системы гидравлической автоматики.

К плунжеру *14* посредством самоустанавливающегося соединения крепится поршень *17*, входящий в цилиндрическое отверстие в крышке *12*.

На верхний торец крышки *7* свободно положен диск с отверстием для пропуска вала дробящих конусов *3*. Этот диск предназначен для гашения интенсивных брызг масла, порождаемых процессионным движением вала дробящей головы. Диск с воротником *19* крепится на крышке *7*, образуя камеру, отводящую протекшее масло на диск в маслосборный кольцевой канал в верхней крышке *7*.

Пылезащитное кольцо *20* выполняется из специальной резины (или кожи) и служит для предотвращения проникновения пыли в пространство трущихся смазываемых поверхностей.

Кожух *21* и кольцо *22* служат для предотвращения проникновения «масляного тумана» в область обмотки статора.

Внутренний цилиндр корпуса *1* в средней части имеет соответствующие проточки, позволяющие осуществить охлаждение статора мотора. Подача масла на охлаждение производится под давлением в отверстие *23*. Слив масла происходит через отверстия *24*.

Привод дробилки осуществляется от встроенного электромотора, органически связанного с эксцентриком дробилки.

Крупность дробления регулируется гидравлической системой посредством подкачки ручным насосом масла через отверстие *16* в цилиндр *13* под плунжер *14*.

Поступившее масло под плунжер вызовет подъем плунжера, а вместе с ним и дробящих конусов *3*. При этом щель между футеровками уменьшится.

Первоначальная регулировка дробления, а также и оперативная по мере износа футеровки производится подкачкой масла через ту же гидравлическую систему в отверстие *25*, под поршень *17*.

Преимуществом указанной дробилки является простота регулирования положения дробящих конусов.

Предмет изобретения

1. Гирационная дробилка с опорой для оси, позволяющей регулировать положение дробящих конусов, укрепленных на оси по отношению к неподвижным дробящим поверхностям, отличающаяся тем, что опора выполнена в виде цилиндра с поршнем, на котором расположен подпятник оси, а цилиндр заполнен маслом.

2. Гирационная дробилка по п. 1, отличающаяся тем, что цилиндр соединен с гидравлической системой, позволяющей изменять количество масла в цилиндре при регулировании положения дробящих конусов.

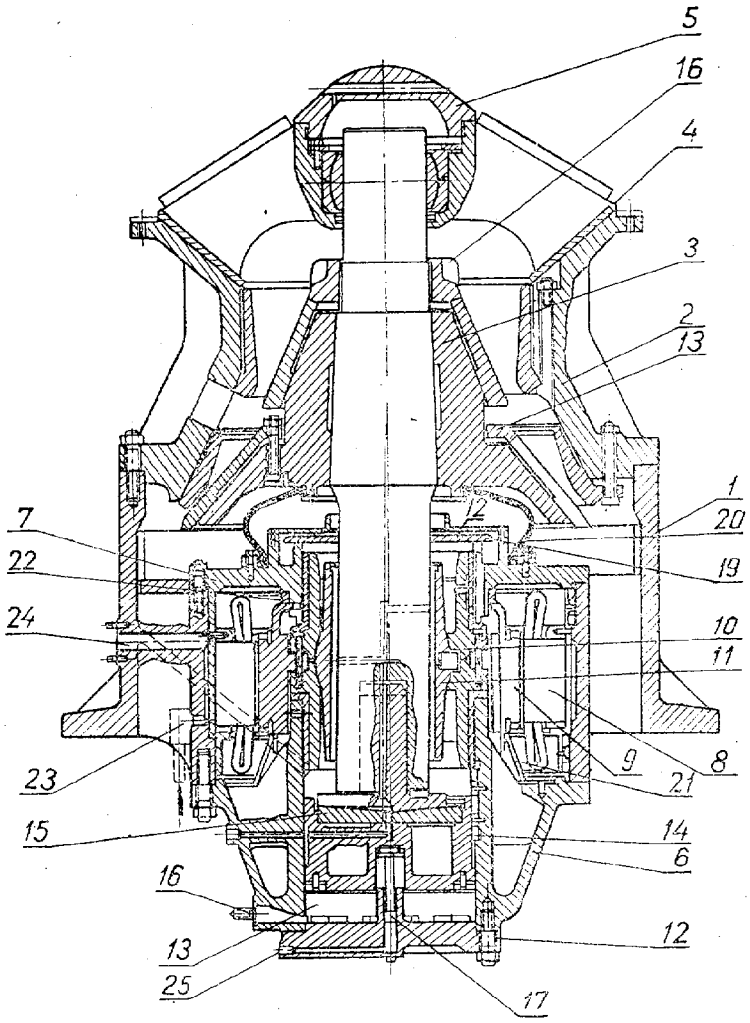

Редактор **Ю. Б. Городецкий** Техред **А. А. Камышникова** Корректор **Р. К. Рабинович**

Подп. к печ. 30/XII — 61 г. Формат бум. 70 × 108 1/16 Объем 0,26 изд. л.
Зак. 3255/14 Тираж 220 Цена 5 коп.

ЦБТИ при Комитете по делам изобретений и открытий
при Совете Министров СССР
Москва, Центр, М. Черкасский пер., д. 2/6.

Типография, пр. Сапунова, 2.

Electronic Acknowledgement Receipt

EFS ID:	32609164
Application Number:	15035774
International Application Number:	
Confirmation Number:	3999
Title of Invention:	GYRATORY CRUSHER MAIN SHAFT AND ASSEMBLY
First Named Inventor/Applicant Name:	Axel BERGMAN
Customer Number:	78686
Filer:	Corinne R. Gorski
Filer Authorized By:	
Attorney Docket Number:	SC 14208WOUS
Receipt Date:	14-MAY-2018
Filing Date:	11-MAY-2016
Time Stamp:	09:50:28
Application Type:	U.S. National Stage under 35 USC 371

Payment information:

Submitted with Payment	no

File Listing:

Document Number	Document Description	File Name	File Size(Bytes)/ Message Digest	Multi Part /.zip	Pages (if appl.)
1	Information Disclosure Statement (IDS) Form (SB08)	14208WOUSIDS3.pdf	612097 35a775407fb9ac1c5533ce45bcfa3a1005f39c7d	no	4

Warnings:

Information:					
A U.S. Patent Number Citation or a U.S. Publication Number Citation is required in the Information Disclosure Statement (IDS) form for autoloading of data into USPTO systems. You may remove the form to add the required data in order to correct the Informational Message if you are citing U.S. References. If you chose not to include U.S. References, the image of the form will be processed and be made available within the Image File Wrapper (IFW) system. However, no data will be extracted from this form. Any additional data such as Foreign Patent Documents or Non Patent Literature will be manually reviewed and keyed into USPTO systems.					
2	Foreign Reference	WO9715395A1.pdf	717947 3da3327e2279dcef0a6595df4d7822ff610d9793	no	17
Warnings:					
Information:					
3	Foreign Reference	SU87056A1.pdf	339946 59605d0b6c6e9b5247b1240b5b98659c35a309c8	no	6
Warnings:					
Information:					
			Total Files Size (in bytes):	1669990	

This Acknowledgement Receipt evidences receipt on the noted date by the USPTO of the indicated documents, characterized by the applicant, and including page counts, where applicable. It serves as evidence of receipt similar to a Post Card, as described in MPEP 503.

New Applications Under 35 U.S.C. 111

If a new application is being filed and the application includes the necessary components for a filing date (see 37 CFR 1.53(b)-(d) and MPEP 506), a Filing Receipt (37 CFR 1.54) will be issued in due course and the date shown on this Acknowledgement Receipt will establish the filing date of the application.

National Stage of an International Application under 35 U.S.C. 371

If a timely submission to enter the national stage of an international application is compliant with the conditions of 35 U.S.C. 371 and other applicable requirements a Form PCT/DO/EO/903 indicating acceptance of the application as a national stage submission under 35 U.S.C. 371 will be issued in addition to the Filing Receipt, in due course.

New International Application Filed with the USPTO as a Receiving Office

If a new international application is being filed and the international application includes the necessary components for an international filing date (see PCT Article 11 and MPEP 1810), a Notification of the International Application Number and of the International Filing Date (Form PCT/RO/105) will be issued in due course, subject to prescriptions concerning national security, and the date shown on this Acknowledgement Receipt will establish the international filing date of the application.

UNITED STATES PATENT AND TRADEMARK OFFICE

UNITED STATES DEPARTMENT OF COMMERCE
United States Patent and Trademark Office
Address: COMMISSIONER FOR PATENTS
P.O. Box 1450
Alexandria, Virginia 22313-1450
www.uspto.gov

APPLICATION NO.	FILING DATE	FIRST NAMED INVENTOR	ATTORNEY DOCKET NO.	CONFIRMATION NO.
15/035,774	05/11/2016	Axel BERGMAN	SC 14208WOUS	3999

78686 7590 09/25/2018

Sandvik Intellectual Property
4730 Consulate Plaza Drive
Suite 190
Houston, TX 77032

EXAMINER	
FRANCIS, FAYE	

ART UNIT	PAPER NUMBER
3725	

NOTIFICATION DATE	DELIVERY MODE
09/25/2018	ELECTRONIC

Please find below and/or attached an Office communication concerning this application or proceeding.

The time period for reply, if any, is set in the attached communication.

Notice of the Office communication was sent electronically on above-indicated "Notification Date" to the following e-mail address(es):

corinne.gorski@sandvik.com
patents@sandvik.com
ken.ripple@sandvik.com

Office Action Summary	Application No. 15/035,774	Applicant(s) BERGMAN ET AL.	
	Examiner FAYE FRANCIS	Art Unit 3725	AIA (First Inventor to File) Status Yes

-- The MAILING DATE of this communication appears on the cover sheet with the correspondence address --

Period for Reply

A SHORTENED STATUTORY PERIOD FOR REPLY IS SET TO EXPIRE *3* MONTHS FROM THE MAILING DATE OF THIS COMMUNICATION.

- Extensions of time may be available under the provisions of 37 CFR 1.136(a). In no event, however, may a reply be timely filed after SIX (6) MONTHS from the mailing date of this communication.
- If NO period for reply is specified above, the maximum statutory period will apply and will expire SIX (6) MONTHS from the mailing date of this communication.
- Failure to reply within the set or extended period for reply will, by statute, cause the application to become ABANDONED (35 U.S.C. § 133). Any reply received by the Office later than three months after the mailing date of this communication, even if timely filed, may reduce any earned patent term adjustment. See 37 CFR 1.704(b).

Status

1)☒ Responsive to communication(s) filed on *5/11/16*.

☐ A declaration(s)/affidavit(s) under **37 CFR 1.130(b)** was/were filed on _____.

2a)☐ This action is **FINAL**. 2b)☒ This action is non-final.

3)☐ An election was made by the applicant in response to a restriction requirement set forth during the interview on _____; the restriction requirement and election have been incorporated into this action.

4)☐ Since this application is in condition for allowance except for formal matters, prosecution as to the merits is closed in accordance with the practice under *Ex parte Quayle*, 1935 C.D. 11, 453 O.G. 213.

Disposition of Claims*

5)☒ Claim(s) *1-14* is/are pending in the application.

5a) Of the above claim(s) _____ is/are withdrawn from consideration.

6)☐ Claim(s) _____ is/are allowed.

7)☒ Claim(s) *1-14* is/are rejected.

8)☐ Claim(s) _____ is/are objected to.

9)☐ Claim(s) _____ are subject to restriction and/or election requirement.

* If any claims have been determined allowable, you may be eligible to benefit from the **Patent Prosecution Highway** program at a participating intellectual property office for the corresponding application. For more information, please see http://www.uspto.gov/patents/init_events/pph/index.jsp or send an inquiry to PPHfeedback@uspto.gov.

Application Papers

10)☐ The specification is objected to by the Examiner.

11)☒ The drawing(s) filed on *5/11/16* is/are: a)☒ accepted or b)☐ objected to by the Examiner.

Applicant may not request that any objection to the drawing(s) be held in abeyance. See 37 CFR 1.85(a).

Replacement drawing sheet(s) including the correction is required if the drawing(s) is objected to. See 37 CFR 1.121(d).

Priority under 35 U.S.C. § 119

12)☒ Acknowledgment is made of a claim for foreign priority under 35 U.S.C. § 119(a)-(d) or (f).

Certified copies:

a)☒ All b)☐ Some** c)☐ None of the:

1.☒ Certified copies of the priority documents have been received.

2.☐ Certified copies of the priority documents have been received in Application No. _____.

3.☐ Copies of the certified copies of the priority documents have been received in this National Stage application from the International Bureau (PCT Rule 17.2(a)).

** See the attached detailed Office action for a list of the certified copies not received.

Attachment(s)

1) ☒ Notice of References Cited (PTO-892)

2) ☒ Information Disclosure Statement(s) (PTO/SB/08a and/or PTO/SB/08b) Paper No(s)/Mail Date *attached*.

3) ☐ Interview Summary (PTO-413) Paper No(s)/Mail Date. _____ .

4) ☐ Other: _____.

1. The present application, filed on or after March 16, 2013, is being examined under the first inventor to file provisions of the AIA.

DETAILED ACTION

Claim Rejections - 35 USC § 112

2. The following is a quotation of 35 U.S.C. 112(b):

> (b) CONCLUSION.—The specification shall conclude with one or more claims particularly pointing out and distinctly claiming the subject matter which the inventor or a joint inventor regards as the invention.

The following is a quotation of 35 U.S.C. 112 (pre-AIA), second paragraph:

> The specification shall conclude with one or more claims particularly pointing out and distinctly claiming the subject matter which the applicant regards as his invention.

3. Claims 1-14 are rejected under 35 U.S.C. 112(b) or 35 U.S.C. 112 (pre-AIA), second paragraph, as being indefinite for failing to particularly point out and distinctly claim the subject matter which the inventor or a joint inventor, or for pre-AIA the applicant regards as the invention. The claims are generally narrative and indefinite, failing to conform with current U.S. practice. For example only:

The scope of claim 1 and its dependent claims are unclear. The preamble recites "A gyratory crusher main shaft of a crusher comprising" indicating that what is claimed is the gyratory crusher main shaft, however, lines 2-4 of the claim appears to refer to the crusher. It is not clear whether the applicant's intension is to positively claim the crusher or not. Additionally, in line 2 from the bottom "pressurised" should be replaced with --pressurized--.

Claim 1 is indefinite since all that the applicant considers to be encompassed by the phrase "configured to mount a shaft sleeve" cannot be determined. It is not clear if

the applicant is positively claiming the “shaft sleeve” or not. Note also claims 9 and 14 with this regard.

In claim 5: the phrase “the groove extends substantially completely circumferentially around the shaft body.” is vague as used. It is not clear what the applicant is claiming. For example, does it extend substantially circumferentially or completely circumferentially?

With respect to claim 10: the claim language is confusing since it is not clear whether “a shaft body” in line 2 is the same shaft body as in line 3 of claim 9 from which claim 10 depends or is an additional one.

Claim 11 is indefinite because it is not clear what the phrase “a disc**-like**” is intended to encompass.

With respect to claim 14: the claim language is confusing since it is not clear whether “a sleeve” in line 11 is the same sleeve as in line 8 or is an additional one.

Several expressions recited in the claims lack sufficient antecedent bases. For example only, the phrase "the sleeve" in line 2 from the bottom of claim 1 lacks proper antecedent basis. In another example only, the phrase “the groove” in line 3 of claims 3 and 4 also lacks proper antecedent basis. In yet another example only, the phrase “the retainer” in line 1 of claim 11 lacks proper antecedent basis. In a fourth example only, note the expression “the wall” in claim 13. These expressions make it difficult to determine what is or not in the claims. Accordingly the applicant is requested to review all of the claims for the purpose of making corrections wherever appropriate but not

specifically pointed to, in order to provide appropriate antecedents and to ensure consistency in the numbers of specific elements recited in the claims.

Claim Rejections - 35 USC § 102

4. In the event the determination of the status of the application as subject to AIA 35 U.S.C. 102 and 103 (or as subject to pre-AIA 35 U.S.C. 102 and 103) is incorrect, any correction of the statutory basis for the rejection will not be considered a new ground of rejection if the prior art relied upon, and the rejection, would be the same under either status.

5. The following is a quotation of the appropriate paragraphs of 35 U.S.C. 102 that form the basis for the rejections under this section made in this Office action:

> A person shall be entitled to a patent unless –
>
> (a)(1) the claimed invention was patented, described in a printed publication, or in public use, on sale or otherwise available to the public before the effective filing date of the claimed invention.

6. Claims 1-14 are rejected as best understood under 35 U.S.C. 102(a)(1) as being anticipated by Johnson et al.

The claims are interpreted as best understood by the examiner. The claims are interpreted as requiring a gyratory crusher main shaft comprising: a shaft body (in Figs. 12-13, 43 corresponds to a shaft insofar as the applicant has claimed) having a radially outward facing external first end and a second end tapered relative to a longitudinal axis of the shaft body such that a cross sectional area of the shaft body at the tapered axial region decreases in a direction from the first end to the second end and at least one groove (39) indented at the external surface arranged to receive a pressurized fluid.

Johnson et al is considered to clearly show a device having the structural elements of the claims that can be understood.

Claim Rejections - 35 USC § 103

7. The following is a quotation of 35 U.S.C. 103 which forms the basis for all obviousness rejections set forth in this Office action:

> A patent for a claimed invention may not be obtained, notwithstanding that the claimed invention is not identically disclosed as set forth in section 102, if the differences between the claimed invention and the prior art are such that the claimed invention as a whole would have been obvious before the effective filing date of the claimed invention to a person having ordinary skill in the art to which the claimed invention pertains. Patentability shall not be negated by the manner in which the invention was made.

8. This application currently names joint inventors. In considering patentability of the claims the examiner presumes that the subject matter of the various claims was commonly owned as of the effective filing date of the claimed invention(s) absent any evidence to the contrary. Applicant is advised of the obligation under 37 CFR 1.56 to point out the inventor and effective filing dates of each claim that was not commonly owned as of the effective filing date of the later invention in order for the examiner to consider the applicability of 35 U.S.C. 102(b)(2)(C) for any potential 35 U.S.C. 102(a)(2) prior art against the later invention.

Claims 1-14 are rejected as best understood under 35 U.S.C. 103 as being unpatentable over applicant's admitted Prior Art (lines 2-9 of claim 1), hereinafter Prior Art in view of Johnson et al.

Prior Art discloses most the element of these claims but does not disclose the at least one groove indented at the external surface arranged to receive a pressurized fluid.

Johnson et al teaches the concept of providing a gyratory crusher with grooves 39 to receive a pressurized fluid (lubricating oil). It would have been obvious to one of ordinary skill in the art before the effective filing date of the claimed invention to provide the device of Prior Art with the grooves as taught by Johnson et al in order deliver lubricating oil to the outside surface.

Conclusion

9. The prior art made of record and not relied upon is considered pertinent to applicant's disclosure.

10. Any inquiry concerning this communication or earlier communications from the examiner should be directed to FAYE FRANCIS whose telephone number is (571)272-4423. The examiner can normally be reached on M-F 9-5.

Examiner interviews are available via telephone, in-person, and video conferencing using a USPTO supplied web-based collaboration tool. To schedule an interview, applicant is encouraged to use the USPTO Automated Interview Request (AIR) at http://www.uspto.gov/interviewpractice.

If attempts to reach the examiner by telephone are unsuccessful, the examiner's supervisor, Shelley Self can be reached on 571-272-4524. The fax phone number for the organization where this application or proceeding is assigned is 571-273-8300.

Information regarding the status of an application may be obtained from the Patent Application Information Retrieval (PAIR) system. Status information for published applications may be obtained from either Private PAIR or Public PAIR. Status information for unpublished applications is available through Private PAIR only. For more information about the PAIR system, see http://pair-direct.uspto.gov. Should you have questions on access to the Private PAIR system, contact the Electronic Business Center (EBC) at 866-217-9197 (toll-free). If you would like assistance from a USPTO Customer Service Representative or access to the automated information system, call 800-786-9199 (IN USA OR CANADA) or 571-272-1000.

/Faye Francis/
Primary Examiner
Art Unit 3725

FF

Notice of References Cited	Application/Control No. 15/035,774	Applicant(s)/Patent Under Reexamination BERGMAN ET AL.	
	Examiner FAYE FRANCIS	Art Unit 3725	Page 1 of 1

U.S. PATENT DOCUMENTS

*		Document Number Country Code-Number-Kind Code	Date MM-YYYY	Name	CPC Classification	US Classification
*	A	US-2,916,218 A	12-1959	EWALD WERNER	B02C2/04	241/208
*	B	US-RE27,970 E	04-1974	Johnson	B02C2/04	241/202
*	C	US-3,891,153 A	06-1975	Decker; Hanns	B02C2/047	241/208
*	D	US-5,718,391 A	02-1998	Musil; Joseph E.	B02C2/045	241/207
*	E	US-5,944,265 A	08-1999	Ganser, IV; William A.	B02C2/00	241/207
*	F	US-6,213,418 B1	04-2001	Gabriel; Michael R.	B02C2/04	241/207
*	G	US-7,048,214 B2	05-2006	Johnson; Louis Wein	B02C2/00	241/207
*	H	US-2009/0008489 A1	01-2009	Nieminen; Ilpo K.	B02C2/047	241/207
*	I	US-7,922,109 B2	04-2011	Persson; Sebastian	B02C2/047	241/209
	J	US-				
	K	US-				
	L	US-				
	M	US-				

FOREIGN PATENT DOCUMENTS

*		Document Number Country Code-Number-Kind Code	Date MM-YYYY	Country	Name	CPC Classification
	N					
	O					
	P					
	Q					
	R					
	S					
	T					

NON-PATENT DOCUMENTS

*		Include as applicable: Author, Title Date, Publisher, Edition or Volume, Pertinent Pages)
	U	
	V	
	W	
	X	

*A copy of this reference is not being furnished with this Office action. (See MPEP § 707.05(a).)
Dates in MM-YYYY format are publication dates. Classifications may be US or foreign.

Index of Claims	Application/Control No.	Applicant(s)/Patent Under Reexamination
	15035774	BERGMAN ET AL.
	Examiner	**Art Unit**
	FAYE FRANCIS	3725

✓	Rejected	-	Cancelled	N	Non-Elected	A	Appeal
=	Allowed	÷	Restricted	I	Interference	O	Objected

☐ Claims renumbered in the same order as presented by applicant ☐ CPA ☐ T.D. ☐ R.1.47

CLAIM		DATE								
Final	Original	09/19/2018								
	1	✓								
	2	✓								
	3	✓								
	4	✓								
	5	✓								
	6	✓								
	7	✓								
	8	✓								
	9	✓								
	10	✓								
	11	✓								
	12	✓								
	13	✓								
	14	✓								

Doc code: IDS
Doc description: Information Disclosure Statement (IDS) Filed

PTO/SB/08a (01-10)
Approved for use through 07/31/2012. OMB 0651-0031
U.S. Patent and Trademark Office; U.S. DEPARTMENT OF COMMERCE
Under the Paperwork Reduction Act of 1995, no persons are required to respond to a collection of information unless it contains a valid OMB control number.

INFORMATION DISCLOSURE STATEMENT BY APPLICANT

(Not for submission under 37 CFR 1.99)

Application Number	15035774
Filing Date	2016-05-11
First Named Inventor	ERIKSSON
Art Unit	
Examiner Name	
Attorney Docket Number	SMRT 14208WOUS

U.S.PATENTS Remove

Examiner Initial*	Cite No	Patent Number	Kind Code[1]	Issue Date	Name of Patentee or Applicant of cited Document	Pages,Columns,Lines where Relevant Passages or Relevant Figures Appear
	1					

If you wish to add additional U.S. Patent citation information please click the Add button. Add

U.S.PATENT APPLICATION PUBLICATIONS Remove

Examiner Initial*	Cite No	Publication Number	Kind Code[1]	Publication Date	Name of Patentee or Applicant of cited Document	Pages,Columns,Lines where Relevant Passages or Relevant Figures Appear
	1					

If you wish to add additional U.S. Published Application citation information please click the Add button. Add

FOREIGN PATENT DOCUMENTS Remove

Examiner Initial*	Cite No	Foreign Document Number[3]	Country Code[2] i	Kind Code[4]	Publication Date	Name of Patentee or Applicant of cited Document	Pages,Columns,Lines where Relevant Passages or Relevant Figures Appear	T[5]
/F.F/	1	87056	SU	A1	1949-11-30	KIRICHENKO ET AL		X
/F.F/	2	9715395	WO	A1	1997-05-01	RUOKONEN ET AL		☐

If you wish to add additional Foreign Patent Document citation information please click the Add button Add

NON-PATENT LITERATURE DOCUMENTS Remove

INFORMATION DISCLOSURE STATEMENT BY APPLICANT

(Not for submission under 37 CFR 1.99)

Application Number	15035774
Filing Date	2016-05-11
First Named Inventor	ERIKSSON
Art Unit	
Examiner Name	
Attorney Docket Number	SMRT 14208WOUS

Examiner Initials*	Cite No	Include name of the author (in CAPITAL LETTERS), title of the article (when appropriate), title of the item (book, magazine, journal, serial, symposium, catalog, etc), date, pages(s), volume-issue number(s), publisher, city and/or country where published.	T[5]
	1		

If you wish to add additional non-patent literature document citation information please click the Add button Add

EXAMINER SIGNATURE

Examiner Signature	/FAYE FRANCIS/	Date Considered	09/17/2018

*EXAMINER: Initial if reference considered, whether or not citation is in conformance with MPEP 609. Draw line through a citation if not in conformance and not considered. Include copy of this form with next communication to applicant.

[1] See Kind Codes of USPTO Patent Documents at www.USPTO.GOV or MPEP 901.04. [2] Enter office that issued the document, by the two-letter code (WIPO Standard ST.3). [3] For Japanese patent documents, the indication of the year of the reign of the Emperor must precede the serial number of the patent document. [4] Kind of document by the appropriate symbols as indicated on the document under WIPO Standard ST.16 if possible. [5] Applicant is to place a check mark here if English language translation is attached.

INFORMATION DISCLOSURE STATEMENT BY APPLICANT

(Not for submission under 37 CFR 1.99)

Application Number	15035774
Filing Date	2016-05-11
First Named Inventor	ERIKSSON
Art Unit	
Examiner Name	
Attorney Docket Number	SMRT 14208WOUS

CERTIFICATION STATEMENT

Please see 37 CFR 1.97 and 1.98 to make the appropriate selection(s):

☒ That each item of information contained in the information disclosure statement was first cited in any communication from a foreign patent office in a counterpart foreign application not more than three months prior to the filing of the information disclosure statement. See 37 CFR 1.97(e)(1).

OR

☐ That no item of information contained in the information disclosure statement was cited in a communication from a foreign patent office in a counterpart foreign application, and, to the knowledge of the person signing the certification after making reasonable inquiry, no item of information contained in the information disclosure statement was known to any individual designated in 37 CFR 1.56(c) more than three months prior to the filing of the information disclosure statement. See 37 CFR 1.97(e)(2).

See attached certification statement.

The fee set forth in 37 CFR 1.17 (p) has been submitted herewith.

A certification statement is not submitted herewith.

SIGNATURE

A signature of the applicant or representative is required in accordance with CFR 1.33, 10.18. Please see CFR 1.4(d) for the form of the signature.

Signature	/Corinne Gorski/	Date (YYYY-MM-DD)	2018-05-14
Name/Print	Corinne Gorski	Registration Number	34339

This collection of information is required by 37 CFR 1.97 and 1.98. The information is required to obtain or retain a benefit by the public which is to file (and by the USPTO to process) an application. Confidentiality is governed by 35 U.S.C. 122 and 37 CFR 1.14. This collection is estimated to take 1 hour to complete, including gathering, preparing and submitting the completed application form to the USPTO. Time will vary depending upon the individual case. Any comments on the amount of time you require to complete this form and/or suggestions for reducing this burden, should be sent to the Chief Information Officer, U.S. Patent and Trademark Office, U.S. Department of Commerce, P.O. Box 1450, Alexandria, VA 22313-1450. DO NOT SEND FEES OR COMPLETED FORMS TO THIS ADDRESS. **SEND TO: Commissioner for Patents, P.O. Box 1450, Alexandria, VA 22313-1450.**

Privacy Act Statement

The Privacy Act of 1974 (P.L. 93-579) requires that you be given certain information in connection with your submission of the attached form related to a patent application or patent. Accordingly, pursuant to the requirements of the Act, please be advised that: (1) the general authority for the collection of this information is 35 U.S.C. 2(b)(2); (2) furnishing of the information solicited is voluntary; and (3) the principal purpose for which the information is used by the U.S. Patent and Trademark Office is to process and/or examine your submission related to a patent application or patent. If you do not furnish the requested information, the U.S. Patent and Trademark Office may not be able to process and/or examine your submission, which may result in termination of proceedings or abandonment of the application or expiration of the patent.

The information provided by you in this form will be subject to the following routine uses:

1. The information on this form will be treated confidentially to the extent allowed under the Freedom of Information Act (5 U.S.C. 552) and the Privacy Act (5 U.S.C. 552a). Records from this system of records may be disclosed to the Department of Justice to determine whether the Freedom of Information Act requires disclosure of these record s.

2. A record from this system of records may be disclosed, as a routine use, in the course of presenting evidence to a court, magistrate, or administrative tribunal, including disclosures to opposing counsel in the course of settlement negotiations.

3. A record in this system of records may be disclosed, as a routine use, to a Member of Congress submitting a request involving an individual, to whom the record pertains, when the individual has requested assistance from the Member with respect to the subject matter of the record.

4. A record in this system of records may be disclosed, as a routine use, to a contractor of the Agency having need for the information in order to perform a contract. Recipients of information shall be required to comply with the requirements of the Privacy Act of 1974, as amended, pursuant to 5 U.S.C. 552a(m).

5. A record related to an International Application filed under the Patent Cooperation Treaty in this system of records may be disclosed, as a routine use, to the International Bureau of the World Intellectual Property Organization, pursuant to the Patent Cooperation Treaty.

6. A record in this system of records may be disclosed, as a routine use, to another federal agency for purposes of National Security review (35 U.S.C. 181) and for review pursuant to the Atomic Energy Act (42 U.S.C. 218(c)).

7. A record from this system of records may be disclosed, as a routine use, to the Administrator, General Services, or his/her designee, during an inspection of records conducted by GSA as part of that agency's responsibility to recommend improvements in records management practices and programs, under authority of 44 U.S.C. 2904 and 2906. Such disclosure shall be made in accordance with the GSA regulations governing inspection of records for this purpose, and any other relevant (i.e., GSA or Commerce) directive. Such disclosure shall not be used to make determinations about individuals.

8. A record from this system of records may be disclosed, as a routine use, to the public after either publication of the application pursuant to 35 U.S.C. 122(b) or issuance of a patent pursuant to 35 U.S.C. 151. Further, a record may be disclosed, subject to the limitations of 37 CFR 1.14, as a routine use, to the public if the record was filed in an application which became abandoned or in which the proceedings were terminated and which application is referenced by either a published application, an application open to public inspections or an issued patent.

9. A record from this system of records may be disclosed, as a routine use, to a Federal, State, or local law enforcement agency, if the USPTO becomes aware of a violation or potential violation of law or regulation.

Doc code: IDS
Doc description: Information Disclosure Statement (IDS) Filed

PTO/SB/08a (01-10)
Approved for use through 07/31/2012. OMB 0651-0031
U.S. Patent and Trademark Office; U.S. DEPARTMENT OF COMMERCE
Under the Paperwork Reduction Act of 1995, no persons are required to respond to a collection of information unless it contains a valid OMB control number.

INFORMATION DISCLOSURE STATEMENT BY APPLICANT

(Not for submission under 37 CFR 1.99)

Application Number	
Filing Date	
First Named Inventor	BERGMAN
Art Unit	
Examiner Name	
Attorney Docket Number	SC 14208WOUS

U.S.PATENTS Remove

Examiner Initial*	Cite No	Patent Number	Kind Code[1]	Issue Date	Name of Patentee or Applicant of cited Document	Pages,Columns,Lines where Relevant Passages or Relevant Figures Appear
/F.F/	1	1402255	A	1922-01-03	SANBORN	
/F.F/	2	1592313	A	1925-06-04	SYMONS	
/F.F/	3	1748102	A	1930-02-25	BERNHARD	
/F.F/	4	4027825	A	1977-06-07	COXHILL	
/F.F/	5	5934583	A	1999-08-10	JEAN	
/F.F/	6	3813047	A	1974-05-28	TORRENCE ET AL	
/F.F/	7	3456889	A	1969-07-22	BURKHARDT ET AL	

If you wish to add additional U.S. Patent citation information please click the Add button. Add

U.S.PATENT APPLICATION PUBLICATIONS Remove

INFORMATION DISCLOSURE STATEMENT BY APPLICANT

(Not for submission under 37 CFR 1.99)

Application Number	
Filing Date	
First Named Inventor	BERGMAN
Art Unit	
Examiner Name	
Attorney Docket Number	SC 14208WOUS

Examiner Initial*	Cite No	Publication Number	Kind Code[1]	Publication Date	Name of Patentee or Applicant of cited Document	Pages,Columns,Lines where Relevant Passages or Relevant Figures Appear
/F.F/	1	20020088885	A1	2002-07-11	VAN MULLEM ET AL	

If you wish to add additional U.S. Published Application citation information please click the Add button. Add

FOREIGN PATENT DOCUMENTS Remove

Examiner Initial*	Cite No	Foreign Document Number[3]	Country Code[2]	Kind Code[4]	Publication Date	Name of Patentee or Applicant of cited Document	Pages,Columns,Lines where Relevant Passages or Relevant Figures Appear	T[5]
/F.F/	1	718160	SU	A1	1980-02-28	MUJZEMNEK		☓
/F.F/	2	940837	SU	A1	1982-07-07	FEDOROV		☒
/F.F/	3	2492022	FR	A1	1982-04-16	ACIERS OUTILLAGES EQUIP INDLS		☒
/F.F/	4	531391	FR	A	1922-01-11	SMITH ENGINEERING WORKS		☒

If you wish to add additional Foreign Patent Document citation information please click the Add button Add

NON-PATENT LITERATURE DOCUMENTS Remove

Examiner Initials*	Cite No	Include name of the author (in CAPITAL LETTERS), title of the article (when appropriate), title of the item (book, magazine, journal, serial, symposium, catalog, etc), date, pages(s), volume-issue number(s), publisher, city and/or country where published.	T[5]
	1		

If you wish to add additional non-patent literature document citation information please click the Add button Add

INFORMATION DISCLOSURE STATEMENT BY APPLICANT (Not for submission under 37 CFR 1.99)		
	Application Number	
	Filing Date	
	First Named Inventor	BERGMAN
	Art Unit	
	Examiner Name	
	Attorney Docket Number	SC 14208WOUS

EXAMINER SIGNATURE			
Examiner Signature	/FAYE FRANCIS/	Date Considered	09/17/2018

*EXAMINER: Initial if reference considered, whether or not citation is in conformance with MPEP 609. Draw line through a citation if not in conformance and not considered. Include copy of this form with next communication to applicant.

[1] See Kind Codes of USPTO Patent Documents at www.USPTO.GOV or MPEP 901.04. [2] Enter office that issued the document, by the two-letter code (WIPO Standard ST.3). [3] For Japanese patent documents, the indication of the year of the reign of the Emperor must precede the serial number of the patent document. [4] Kind of document by the appropriate symbols as indicated on the document under WIPO Standard ST.16 if possible. [5] Applicant is to place a check mark here if English language translation is attached.

INFORMATION DISCLOSURE STATEMENT BY APPLICANT (Not for submission under 37 CFR 1.99)		
	Application Number	
	Filing Date	
	First Named Inventor	BERGMAN
	Art Unit	
	Examiner Name	
	Attorney Docket Number	SC 14208WOUS

CERTIFICATION STATEMENT

Please see 37 CFR 1.97 and 1.98 to make the appropriate selection(s):

That each item of information contained in the information disclosure statement was first cited in any communication from a foreign patent office in a counterpart foreign application not more than three months prior to the filing of the information disclosure statement. See 37 CFR 1.97(e)(1).

OR

☐ That no item of information contained in the information disclosure statement was cited in a communication from a foreign patent office in a counterpart foreign application, and, to the knowledge of the person signing the certification after making reasonable inquiry, no item of information contained in the information disclosure statement was known to any individual designated in 37 CFR 1.56(c) more than three months prior to the filing of the information disclosure statement. See 37 CFR 1.97(e)(2).

See attached certification statement.

The fee set forth in 37 CFR 1.17 (p) has been submitted herewith.

A certification statement is not submitted herewith.

SIGNATURE

A signature of the applicant or representative is required in accordance with CFR 1.33, 10.18. Please see CFR 1.4(d) for the form of the signature.

Signature	/Corinne Gorski/	Date (YYYY-MM-DD)	2016-05-11
Name/Print	Corinne Gorski	Registration Number	34339

This collection of information is required by 37 CFR 1.97 and 1.98. The information is required to obtain or retain a benefit by the public which is to file (and by the USPTO to process) an application. Confidentiality is governed by 35 U.S.C. 122 and 37 CFR 1.14. This collection is estimated to take 1 hour to complete, including gathering, preparing and submitting the completed application form to the USPTO. Time will vary depending upon the individual case. Any comments on the amount of time you require to complete this form and/or suggestions for reducing this burden, should be sent to the Chief Information Officer, U.S. Patent and Trademark Office, U.S. Department of Commerce, P.O. Box 1450, Alexandria, VA 22313-1450. DO NOT SEND FEES OR COMPLETED FORMS TO THIS ADDRESS. **SEND TO: Commissioner for Patents, P.O. Box 1450, Alexandria, VA 22313-1450.**

Privacy Act Statement

The Privacy Act of 1974 (P.L. 93-579) requires that you be given certain information in connection with your submission of the attached form related to a patent application or patent. Accordingly, pursuant to the requirements of the Act, please be advised that: (1) the general authority for the collection of this information is 35 U.S.C. 2(b)(2); (2) furnishing of the information solicited is voluntary; and (3) the principal purpose for which the information is used by the U.S. Patent and Trademark Office is to process and/or examine your submission related to a patent application or patent. If you do not furnish the requested information, the U.S. Patent and Trademark Office may not be able to process and/or examine your submission, which may result in termination of proceedings or abandonment of the application or expiration of the patent.

The information provided by you in this form will be subject to the following routine uses:

1. The information on this form will be treated confidentially to the extent allowed under the Freedom of Information Act (5 U.S.C. 552) and the Privacy Act (5 U.S.C. 552a). Records from this system of records may be disclosed to the Department of Justice to determine whether the Freedom of Information Act requires disclosure of these record s.

2. A record from this system of records may be disclosed, as a routine use, in the course of presenting evidence to a court, magistrate, or administrative tribunal, including disclosures to opposing counsel in the course of settlement negotiations.

3. A record in this system of records may be disclosed, as a routine use, to a Member of Congress submitting a request involving an individual, to whom the record pertains, when the individual has requested assistance from the Member with respect to the subject matter of the record.

4. A record in this system of records may be disclosed, as a routine use, to a contractor of the Agency having need for the information in order to perform a contract. Recipients of information shall be required to comply with the requirements of the Privacy Act of 1974, as amended, pursuant to 5 U.S.C. 552a(m).

5. A record related to an International Application filed under the Patent Cooperation Treaty in this system of records may be disclosed, as a routine use, to the International Bureau of the World Intellectual Property Organization, pursuant to the Patent Cooperation Treaty.

6. A record in this system of records may be disclosed, as a routine use, to another federal agency for purposes of National Security review (35 U.S.C. 181) and for review pursuant to the Atomic Energy Act (42 U.S.C. 218(c)).

7. A record from this system of records may be disclosed, as a routine use, to the Administrator, General Services, or his/her designee, during an inspection of records conducted by GSA as part of that agency's responsibility to recommend improvements in records management practices and programs, under authority of 44 U.S.C. 2904 and 2906. Such disclosure shall be made in accordance with the GSA regulations governing inspection of records for this purpose, and any other relevant (i.e., GSA or Commerce) directive. Such disclosure shall not be used to make determinations about individuals.

8. A record from this system of records may be disclosed, as a routine use, to the public after either publication of the application pursuant to 35 U.S.C. 122(b) or issuance of a patent pursuant to 35 U.S.C. 151. Further, a record may be disclosed, subject to the limitations of 37 CFR 1.14, as a routine use, to the public if the record was filed in an application which became abandoned or in which the proceedings were terminated and which application is referenced by either a published application, an application open to public inspections or an issued patent.

9. A record from this system of records may be disclosed, as a routine use, to a Federal, State, or local law enforcement agency, if the USPTO becomes aware of a violation or potential violation of law or regulation.

EAST Search History

EAST Search History (Prior Art)

Ref #	Hits	Search Query	DBs	Default Operator	Plurals	Time Stamp
L2	947	(241/207-209).CCLS.	US-PGPUB; USPAT; USOCR; FPRS; EPO; JPO; DERWENT; IBM_TDB	OR	OFF	2018/09/19 13:41
L3	35	2 and ((oil or lubric$4) near5 (groove or channel))	US-PGPUB; USPAT; USOCR; FPRS; EPO; JPO; DERWENT; IBM_TDB	OR	ON	2018/09/19 13:48
L5	0	((("BERGMAN") near3 ("Axel"))).INV. and ((oil or lubric$4) near5 (groove or channel))	US-PGPUB; USPAT; USOCR	OR	ON	2018/09/19 15:33
L6	2	((("BERGMAN") near3 ("Axel"))).INV. and (oil or lubric$4)	US-PGPUB; USPAT; USOCR	OR	ON	2018/09/19 15:33
L7	0	((("LARSSON") near3 ("Mikael") near3 ("M"))).INV. and ((oil or lubric$4) near5 (groove or channel))	US-PGPUB; USPAT; USOCR	OR	ON	2018/09/19 15:33
L8	1	((("LARSSON") near3 ("Mikael") near3 ("M"))).INV. and (oil or lubric$4)	US-PGPUB; USPAT; USOCR	OR	ON	2018/09/19 15:34
L9	2	((("MALMQVIST") near3 ("Patric"))).INV. and (oil or lubric$4)	US-PGPUB; USPAT; USOCR	OR	ON	2018/09/19 15:34
L11	11	((("ERIKSSON") near3 ("Fredrik"))).INV. and (oil or lubric$4)	US-PGPUB; USPAT; USOCR	OR	ON	2018/09/19 15:35
L12	17	((("ERIKSSON") near3 ("Bengt-Arne"))).INV. and (oil or lubric$4)	US-PGPUB; USPAT; USOCR	OR	ON	2018/09/19 15:35
L14	13	B02C2/02.cpc. and ((oil or lubric$4) near5 (groove or channel))	US-PGPUB; USPAT; USOCR; FPRS; EPO; JPO; DERWENT; IBM_TDB	OR	ON	2018/09/19 15:37
L15	61	B02C2/04.cpc. and ((oil or lubric$4) near5 (groove or channel))	US-PGPUB; USPAT; USOCR; FPRS; EPO; JPO; DERWENT; IBM_TDB	OR	ON	2018/09/19 15:38
S1	8	("1402255" | "1592313" | "1748102" | "20020088885" | "3456889" | "3813047" | "4027825" | "5934583").PN.	US-PGPUB; USPAT	OR	ON	2018/09/17 17:57
S2	57	((("BERGMAN") near3 ("Axel"))).INV.	US-PGPUB; USPAT; USOCR	OR	ON	2018/09/17 17:58
S3	21	((("LARSSON") near3 ("Mikael") near3 ("M"))).INV.	US-PGPUB; USPAT; USOCR	OR	ON	2018/09/17 17:58
S4	31	((("MALMQVIST") near3	US-PGPUB; USPAT;	OR	ON	2018/09/17

		("Patric"))).INV.	USOCR			17:58
S5	39	((("HALLBERG") near3 ("Anders"))).INV.	US-PGPUB; USPAT; USOCR	OR	ON	2018/09/17 17:58
S6	2	((("NILSSON") near3 ("Matts-Ake"))).INV.	US-PGPUB; USPAT; USOCR	OR	ON	2018/09/17 17:58
S7	23	((("ERIKSSON") near3 ("Fredrik"))).INV.	US-PGPUB; USPAT; USOCR	OR	ON	2018/09/17 17:58
S8	54	((("ERIKSSON") near3 ("Bengt-Arne"))).INV.	US-PGPUB; USPAT; USOCR	OR	ON	2018/09/17 17:59
S9	1	((("HOLOMBERG") near3 ("Anne"))).INV.	US-PGPUB; USPAT; USOCR	OR	ON	2018/09/17 17:59
S10	1318	B02C2/06.cpc.	US-PGPUB; USPAT; USOCR; FPRS; EPO; JPO; DERWENT; IBM_TDB	OR	ON	2018/09/17 18:00
S11	1363	B02C2/04.cpc.	US-PGPUB; USPAT; USOCR; FPRS; EPO; JPO; DERWENT; IBM_TDB	OR	ON	2018/09/17 18:00
S12	189	B02C2/02.cpc.	US-PGPUB; USPAT; USOCR; FPRS; EPO; JPO; DERWENT; IBM_TDB	OR	ON	2018/09/17 18:00

9/19/2018 4:13:40 PM
C:\Users\ffrancis\Documents\EAST\Workspaces\15035774.wsp

Search Notes	Application/Control No.	Applicant(s)/Patent Under Reexamination
	15035774	BERGMAN ET AL.
	Examiner	Art Unit
	FAYE FRANCIS	3725

CPC- SEARCHED		
Symbol	Date	Examiner
B02C2/02, 04, 06	9/19/2018	FF

CPC COMBINATION SETS - SEARCHED		
Symbol	Date	Examiner

US CLASSIFICATION SEARCHED			
Class	Subclass	Date	Examiner
241	207-209	9/19/2018	FF

* See search history printout included with this form or the SEARCH NOTES box below to determine the scope of the search.

SEARCH NOTES		
Search Notes	Date	Examiner
B02C2/02, 04, 06	9/19/2018	FF

INTERFERENCE SEARCH			
US Class/ CPC Symbol	US Subclass / CPC Group	Date	Examiner

Doc code: IDS
Doc description: Information Disclosure Statement (IDS) Filed

PTO/SB/08a (01-10)
Approved for use through 07/31/2012. OMB 0651-0031
U.S. Patent and Trademark Office; U.S. DEPARTMENT OF COMMERCE
Under the Paperwork Reduction Act of 1995, no persons are required to respond to a collection of information unless it contains a valid OMB control number.

INFORMATION DISCLOSURE STATEMENT BY APPLICANT

(Not for submission under 37 CFR 1.99)

Application Number	15035774
Filing Date	2014-05-23
First Named Inventor	ERIKSSON
Art Unit	
Examiner Name	
Attorney Docket Number	SMRT 14208WOUS

U.S.PATENTS Remove

Examiner Initial*	Cite No	Patent Number	Kind Code[1]	Issue Date	Name of Patentee or Applicant of cited Document	Pages,Columns,Lines where Relevant Passages or Relevant Figures Appear
	1					

If you wish to add additional U.S. Patent citation information please click the Add button. Add

U.S.PATENT APPLICATION PUBLICATIONS Remove

Examiner Initial*	Cite No	Publication Number	Kind Code[1]	Publication Date	Name of Patentee or Applicant of cited Document	Pages,Columns,Lines where Relevant Passages or Relevant Figures Appear
/F.F/	1	20030102394	A1	2003-06-05	MARTINEZ ET AL	
	2					

If you wish to add additional U.S. Published Application citation information please click the Add button. Add

FOREIGN PATENT DOCUMENTS Remove

Examiner Initial*	Cite No	Foreign Document Number[3]	Country Code[2] i	Kind Code[4]	Publication Date	Name of Patentee or Applicant of cited Document	Pages,Columns,Lines where Relevant Passages or Relevant Figures Appear	T[5]
/F.F/	1	201179454	CN	Y	2009-01-14	SHAOGUAN CITY		☒
/F.F/	2	201431896	CN	Y	2010-03-31	JIANGUO ET AL		☒

INFORMATION DISCLOSURE STATEMENT BY APPLICANT

(Not for submission under 37 CFR 1.99)

Application Number	15035774
Filing Date	2014-05-23
First Named Inventor	ERIKSSON
Art Unit	
Examiner Name	
Attorney Docket Number	SMRT 14208WOUS

/F.F/	3	201807388	CN	U	2011-04-27	CHEN		☒
/F.F/	4	203170383	CN	U	2013-09-07	XIANBIN		☒

If you wish to add additional Foreign Patent Document citation information please click the Add button Add

NON-PATENT LITERATURE DOCUMENTS Remove

Examiner Initials*	Cite No	Include name of the author (in CAPITAL LETTERS), title of the article (when appropriate), title of the item (book, magazine, journal, serial, symposium, catalog, etc), date, pages(s), volume-issue number(s), publisher, city and/or country where published.	T[5]
	1		

If you wish to add additional non-patent literature document citation information please click the Add button Add

EXAMINER SIGNATURE

Examiner Signature	/FAYE FRANCIS/	Date Considered	09/17/2018

*EXAMINER: Initial if reference considered, whether or not citation is in conformance with MPEP 609. Draw line through a citation if not in conformance and not considered. Include copy of this form with next communication to applicant.

[1] See Kind Codes of USPTO Patent Documents at www.USPTO.GOV or MPEP 901.04. [2] Enter office that issued the document, by the two-letter code (WIPO Standard ST.3). [3] For Japanese patent documents, the indication of the year of the reign of the Emperor must precede the serial number of the patent document. [4] Kind of document by the appropriate symbols as indicated on the document under WIPO Standard ST.16 if possible. [5] Applicant is to place a check mark here if English language translation is attached.

INFORMATION DISCLOSURE STATEMENT BY APPLICANT

(Not for submission under 37 CFR 1.99)

Application Number	15035774
Filing Date	2014-05-23
First Named Inventor	ERIKSSON
Art Unit	
Examiner Name	
Attorney Docket Number	SMRT 14208WOUS

CERTIFICATION STATEMENT

Please see 37 CFR 1.97 and 1.98 to make the appropriate selection(s):

☒ That each item of information contained in the information disclosure statement was first cited in any communication from a foreign patent office in a counterpart foreign application not more than three months prior to the filing of the information disclosure statement. See 37 CFR 1.97(e)(1).

OR

☐ That no item of information contained in the information disclosure statement was cited in a communication from a foreign patent office in a counterpart foreign application, and, to the knowledge of the person signing the certification after making reasonable inquiry, no item of information contained in the information disclosure statement was known to any individual designated in 37 CFR 1.56(c) more than three months prior to the filing of the information disclosure statement. See 37 CFR 1.97(e)(2).

See attached certification statement.

The fee set forth in 37 CFR 1.17 (p) has been submitted herewith.

A certification statement is not submitted herewith.

SIGNATURE

A signature of the applicant or representative is required in accordance with CFR 1.33, 10.18. Please see CFR 1.4(d) for the form of the signature.

Signature	/Corinne Gorski/	Date (YYYY-MM-DD)	2017-12-22
Name/Print	Corinne Gorski	Registration Number	34339

This collection of information is required by 37 CFR 1.97 and 1.98. The information is required to obtain or retain a benefit by the public which is to file (and by the USPTO to process) an application. Confidentiality is governed by 35 U.S.C. 122 and 37 CFR 1.14. This collection is estimated to take 1 hour to complete, including gathering, preparing and submitting the completed application form to the USPTO. Time will vary depending upon the individual case. Any comments on the amount of time you require to complete this form and/or suggestions for reducing this burden, should be sent to the Chief Information Officer, U.S. Patent and Trademark Office, U.S. Department of Commerce, P.O. Box 1450, Alexandria, VA 22313-1450. DO NOT SEND FEES OR COMPLETED FORMS TO THIS ADDRESS. **SEND TO: Commissioner for Patents, P.O. Box 1450, Alexandria, VA 22313-1450.**

Privacy Act Statement

The Privacy Act of 1974 (P.L. 93-579) requires that you be given certain information in connection with your submission of the attached form related to a patent application or patent. Accordingly, pursuant to the requirements of the Act, please be advised that: (1) the general authority for the collection of this information is 35 U.S.C. 2(b)(2); (2) furnishing of the information solicited is voluntary; and (3) the principal purpose for which the information is used by the U.S. Patent and Trademark Office is to process and/or examine your submission related to a patent application or patent. If you do not furnish the requested information, the U.S. Patent and Trademark Office may not be able to process and/or examine your submission, which may result in termination of proceedings or abandonment of the application or expiration of the patent.

The information provided by you in this form will be subject to the following routine uses:

1. The information on this form will be treated confidentially to the extent allowed under the Freedom of Information Act (5 U.S.C. 552) and the Privacy Act (5 U.S.C. 552a). Records from this system of records may be disclosed to the Department of Justice to determine whether the Freedom of Information Act requires disclosure of these record s.

2. A record from this system of records may be disclosed, as a routine use, in the course of presenting evidence to a court, magistrate, or administrative tribunal, including disclosures to opposing counsel in the course of settlement negotiations.

3. A record in this system of records may be disclosed, as a routine use, to a Member of Congress submitting a request involving an individual, to whom the record pertains, when the individual has requested assistance from the Member with respect to the subject matter of the record.

4. A record in this system of records may be disclosed, as a routine use, to a contractor of the Agency having need for the information in order to perform a contract. Recipients of information shall be required to comply with the requirements of the Privacy Act of 1974, as amended, pursuant to 5 U.S.C. 552a(m).

5. A record related to an International Application filed under the Patent Cooperation Treaty in this system of records may be disclosed, as a routine use, to the International Bureau of the World Intellectual Property Organization, pursuant to the Patent Cooperation Treaty.

6. A record in this system of records may be disclosed, as a routine use, to another federal agency for purposes of National Security review (35 U.S.C. 181) and for review pursuant to the Atomic Energy Act (42 U.S.C. 218(c)).

7. A record from this system of records may be disclosed, as a routine use, to the Administrator, General Services, or his/her designee, during an inspection of records conducted by GSA as part of that agency's responsibility to recommend improvements in records management practices and programs, under authority of 44 U.S.C. 2904 and 2906. Such disclosure shall be made in accordance with the GSA regulations governing inspection of records for this purpose, and any other relevant (i.e., GSA or Commerce) directive. Such disclosure shall not be used to make determinations about individuals.

8. A record from this system of records may be disclosed, as a routine use, to the public after either publication of the application pursuant to 35 U.S.C. 122(b) or issuance of a patent pursuant to 35 U.S.C. 151. Further, a record may be disclosed, subject to the limitations of 37 CFR 1.14, as a routine use, to the public if the record was filed in an application which became abandoned or in which the proceedings were terminated and which application is referenced by either a published application, an application open to public inspections or an issued patent.

9. A record from this system of records may be disclosed, as a routine use, to a Federal, State, or local law enforcement agency, if the USPTO becomes aware of a violation or potential violation of law or regulation.

PTO/SB/06 (09-11)
Approved for use through 1/31/2014. OMB 0651-0032
U.S. Patent and Trademark Office; U.S. DEPARTMENT OF COMMERCE
Under the Paperwork Reduction Act of 1995, no persons are required to respond to a collection of information unless it displays a valid OMB control number.

PATENT APPLICATION FEE DETERMINATION RECORD Substitute for Form PTO-875	Application or Docket Number 15/035,774	Filing Date 05/11/2016	☐ To be Mailed

ENTITY: ☑ LARGE ☐ SMALL ☐ MICRO

APPLICATION AS FILED - PART I

FOR	(Column 1) NUMBER FILED	(Column 2) NUMBER EXTRA		RATE ($)	FEE ($)
☐ BASIC FEE (37 CFR 1.16(a), (b), or (c))	N/A	N/A		N/A	
☐ SEARCH FEE (37 CFR 1.16(k), (i), or (m))	N/A	N/A		N/A	
☐ EXAMINATION FEE (37 CFR 1.16(o), (p), or (q))	N/A	N/A		N/A	
TOTAL CLAIMS (37 CFR 1.16(i))	minus 20 =	*		x $80 =	
INDEPENDENT CLAIMS (37 CFR 1.16(h))	minus 3 =	*		x $420 =	
☐ APPLICATION SIZE FEE (37 CFR 1.16(s))	If the specification and drawings exceed 100 sheets of paper, the application size fee due is $310 ($155 for small entity) for each additional 50 sheets or fraction thereof. See 35 U.S.C. 41(a)(1)(G) and 37 CFR 1.16(s).				
☐ MULTIPLE DEPENDENT CLAIM PRESENT (37 CFR 1.16(j))					
* If the difference in column 1 is less than zero, enter "0" in column 2.				TOTAL	

APPLICATION AS AMENDED - PART II

		(Column 1)		(Column 2)	(Column 3)			
AMENDMENT	01/25/2019	CLAIMS REMAINING AFTER AMENDMENT		HIGHEST NUMBER PREVIOUSLY PAID FOR	PRESENT EXTRA		RATE ($)	ADDITIONAL FEE ($)
	Total (37 CFR 1.16(i))	* 14	Minus	** 20	= 0		x $100 =	0
	Independent (37 CFR 1.16(h))	* 3	Minus	*** 3	= 0		x $460 =	0
	☐ Application Size Fee (37 CFR 1.16(s))							
	☐ FIRST PRESENTATION OF MULTIPLE DEPENDENT CLAIM (37 CFR 1.16(j))							
							TOTAL ADD'L FEE	0

		(Column 1)		(Column 2)	(Column 3)			
AMENDMENT		CLAIMS REMAINING AFTER AMENDMENT		HIGHEST NUMBER PREVIOUSLY PAID FOR	PRESENT EXTRA		RATE ($)	ADDITIONAL FEE ($)
	Total (37 CFR 1.16(i))	*	Minus	**	=		x $0 =	
	Independent (37 CFR 1.16(h))	*	Minus	***	=		x $0 =	
	☐ Application Size Fee (37 CFR 1.16(s))							
	☐ FIRST PRESENTATION OF MULTIPLE DEPENDENT CLAIM (37 CFR 1.16(j))							
							TOTAL ADD'L FEE	

* If the entry in column 1 is less than the entry in column 2, write "0" in column 3.	LIE
** If the "Highest Number Previously Paid For" IN THIS SPACE is less than 20, enter "20".	/JAMES ELLIOTT/
*** If the "Highest Number Previously Paid For" IN THIS SPACE is less than 3, enter "3".	
The "Highest Number Previously Paid For" (Total or Independent) is the highest number found in the appropriate box in column 1.	

This collection of information is required by 37 CFR 1.16. The information is required to obtain or retain a benefit by the public which is to file (and by the USPTO to process) an application. Confidentiality is governed by 35 U.S.C. 122 and 37 CFR 1.14. This collection is estimated to take 12 minutes to complete, including gathering, preparing, and submitting the completed application form to the USPTO. Time will vary depending upon the individual case. Any comments on the amount of time you require to complete this form and/or suggestions for reducing this burden, should be sent to the Chief Information Officer, U.S. Patent and Trademark Office, U.S. Department of Commerce, P.O. Box 1450, Alexandria, VA 22313-1450. DO NOT SEND FEES OR COMPLETED FORMS TO THIS ADDRESS. **SEND TO: Commissioner for Patents, P.O. Box 1450, Alexandria, VA 22313-1450.**

If you need assistance in completing the form, call 1-800-PTO-9199 and select option 2.

Electronic Patent Application Fee Transmittal

Application Number:	15035774
Filing Date:	11-May-2016
Title of Invention:	GYRATORY CRUSHER MAIN SHAFT AND ASSEMBLY
First Named Inventor/Applicant Name:	Axel BERGMAN
Filer:	Corinne R. Gorski
Attorney Docket Number:	SC 14208WOUS

Filed as Large Entity

Filing Fees for U.S. National Stage under 35 USC 371

Description	Fee Code	Quantity	Amount	Sub-Total in USD($)
Basic Filing:				
Pages:				
Claims:				
Miscellaneous-Filing:				
Petition:				
Patent-Appeals-and-Interference:				
Post-Allowance-and-Post-Issuance:				
Extension-of-Time:				

Description	Fee Code	Quantity	Amount	Sub-Total in USD($)
Extension - 1 month with $0 paid	1251	1	200	200
Miscellaneous:				
			Total in USD ($)	**200**

Electronic Acknowledgement Receipt

EFS ID:	34967146
Application Number:	15035774
International Application Number:	
Confirmation Number:	3999
Title of Invention:	GYRATORY CRUSHER MAIN SHAFT AND ASSEMBLY
First Named Inventor/Applicant Name:	Axel BERGMAN
Customer Number:	78686
Filer:	Corinne R. Gorski
Filer Authorized By:	
Attorney Docket Number:	SC 14208WOUS
Receipt Date:	25-JAN-2019
Filing Date:	11-MAY-2016
Time Stamp:	16:57:13
Application Type:	U.S. National Stage under 35 USC 371

Payment information:

Submitted with Payment	yes
Payment Type	DA
Payment was successfully received in RAM	$200
RAM confirmation Number	012819INTEFSW00003965505792
Deposit Account	
Authorized User	
The Director of the USPTO is hereby authorized to charge indicated fees and credit any overpayment as follows:	

File Listing:

Document Number	Document Description	File Name	File Size(Bytes)/ Message Digest	Multi Part /.zip	Pages (if appl.)
1	Amendment/Req. Reconsideration-After Non-Final Reject	SC14208WOUSAmendment.pdf	136221 6cc633d93fd3f5265743a8b6edeeef45c7367e48	no	9
Warnings:					
Information:					
2	Fee Worksheet (SB06)	fee-info.pdf	30779 14178a4f3a2bf2b28a170f77b6ecd87f7a07d8c5	no	2
Warnings:					
Information:					
		Total Files Size (in bytes):	167000		

This Acknowledgement Receipt evidences receipt on the noted date by the USPTO of the indicated documents, characterized by the applicant, and including page counts, where applicable. It serves as evidence of receipt similar to a Post Card, as described in MPEP 503.

New Applications Under 35 U.S.C. 111

If a new application is being filed and the application includes the necessary components for a filing date (see 37 CFR 1.53(b)-(d) and MPEP 506), a Filing Receipt (37 CFR 1.54) will be issued in due course and the date shown on this Acknowledgement Receipt will establish the filing date of the application.

National Stage of an International Application under 35 U.S.C. 371

If a timely submission to enter the national stage of an international application is compliant with the conditions of 35 U.S.C. 371 and other applicable requirements a Form PCT/DO/EO/903 indicating acceptance of the application as a national stage submission under 35 U.S.C. 371 will be issued in addition to the Filing Receipt, in due course.

New International Application Filed with the USPTO as a Receiving Office

If a new international application is being filed and the international application includes the necessary components for an international filing date (see PCT Article 11 and MPEP 1810), a Notification of the International Application Number and of the International Filing Date (Form PCT/RO/105) will be issued in due course, subject to prescriptions concerning national security, and the date shown on this Acknowledgement Receipt will establish the international filing date of the application.

PATENT
Attorney Docket No.: SC 14208WOUS
Date: January 25, 2019

IN THE UNITED STATES PATENT AND TRADEMARK OFFICE

In re Patent Application of	)	
	)	
Axel BERGMAN et al	)	Confirmation No.: 3999
	)	
Application No.: 15/035,774	)	
	)	Examiner: Faye Francis
	)	
Filed: May 11, 2016	)	
	)	Group Art Unit: 3725
For: GYRATORY CRUSHER MAIN SHAFT AND ASSEMBLY	)	

United States Patent & Trademark Office
Commissioner for Patents
P.O. Box 1450
Alexandria, VA 22313

AMENDMENT

Sir:

In response to the Office Action mailed September 25, 2018 in connection with the above-identified application, the period for response having been extended by one (1) month, please amend the application as follows:

Amendments to the Claims begin on page 2 of this paper.

Remarks begin on page 6 of this paper.

Amendments to the Claims:

This listing of claims will replace all prior versions, and listings, of claims in the application.

Please amend the claims as follows:

1. (Currently Amended) A gyratory crusher main shaft of a crusher comprising:

a shaft body having a radially outward facing external surface, and a first end ~~for positioning at a lower region of the crusher~~ and a second end ~~for positioning at an upper region of the crusher relative to the first end~~;

an axial region of the shaft body extending from the second end and being tapered relative to a longitudinal axis of the shaft body such that a cross sectional area of the shaft body at the tapered axial region decreases in a direction from the first end to the second end~~, the tapered axial region being configured to mount~~;

a shaft sleeve mounted on the tapered axial region; and

at least one groove indented at the external surface and positioned at the tapered axial region, the at least one groove being arranged to receive a pressurised fluid to facilitate mounting and dismounting of the shaft sleeve at the shaft body.

2. (Currently Amended) The main shaft as claimed in claim 1, further comprising a fluid inlet conduit extending axially from the second end and provided in fluid communication with the at least one groove to allow a fluid to be supplied to the at least one groove from the second end.

3. (Currently Amended) The main shaft as claimed in claim 2, wherein the fluid inlet conduit extends internally within the shaft body such that a part of the fluid inlet conduit extends radially outward to the at least one groove.

4. (Currently Amended) The main shaft as claimed in claim 3, wherein the at least one groove extends in a circumferential direction around the shaft body.

5. (Currently Amended) The main shaft as claimed in claim 4, wherein the at least one groove extends substantially or completely circumferentially around the shaft body.

6. (Previously Presented) The main shaft as claimed in claim 5, further comprising a plurality of grooves at the external surface.

7. (Previously Presented) The apparatus as claimed in claim 6, further comprising a first groove extending in a circumferential direction around the shaft body and a second groove extending in a circumferential direction around the shaft body, the first groove being separated axially from the second groove and coupled in fluid communication.

8. (Currently Amended) The main shaft as claimed in claim 7, wherein at least a part of the fluid inlet conduit is indented and extends axially at the external surface as a channel to couple the first and second grooves in fluid communication.

9. (Currently Amended) A gyratory crusher main shaft assembly for a crusher comprising:

a shaft body having a radially outward facing external surface, and a first end ~~for positioning at a lower region of the crusher~~ and a second end ~~for positioning at an upper region of the crusher relative to the first end~~, an axial region of the shaft body extending from the second end and being tapered relative to a longitudinal axis of the shaft body such that a cross sectional area of the shaft body at the tapered axial region decreases in a direction from the first end to the second end, ~~tapered axial region being configured to mount~~ a shaft sleeve mounted on the tapered axial region, and at least one groove indented at the external surface and positioned at the tapered axial region, the at least one groove being arranged to receive a pressurised fluid to facilitate mounting and dismounting of the sleeve at the shaft body; and

a sleeve fitted over the tapered axial region, the sleeve having a tapered wall thickness, such that [[a]] the wall thickness at a second ~~upper~~ end of the sleeve is greater than [[a]] the wall thickness at a first ~~lower~~ end of the sleeve.

10. (Currently Amended) The assembly as claimed in claim 9, further comprising an end retainer releasably mounted at the second end of [[a]] the shaft body and having a perimeter region extending radially outward beyond the external surface at the tapered region, the perimeter region positioned to radially overlap the sleeve at the second end of the sleeve to inhibit axial separation of the sleeve from the shaft body.

11. (Currently Amended) The assembly as claimed in claim 10, wherein the end retainer ~~includes a disc-like configuration having~~ includes a recess extending circumferentially at the perimeter region to allow axial movement of the sleeve into the recess.

12. (Currently Amended) The assembly as claimed in claim 9, further comprising a fluid inlet conduit extending axially from the second end of the shaft body in fluid communication with the at least one groove to allow a fluid to be supplied to the at least one groove from the second end of the shaft body.

13. (Currently Amended) The assembly as claimed in claim 9, further comprising a fluid inlet conduit extending radially through the wall thickness of the sleeve in fluid communication with the at least one groove to allow a fluid to be supplied to the at least one groove through the sleeve.

14. (Currently Amended) A gyratory crusher comprising;

a main shaft ~~assembly~~ including a shaft body having a radially outward facing external surface, a first end for positioning at a lower region of the crusher and a second end for positioning at an upper region of the crusher relative to the first end, an axial region of the shaft body extending from the second end and being tapered relative to a longitudinal axis of the shaft body such that a cross sectional area of the shaft body at the tapered axial region decreases in a direction from the first end to the second end, the tapered axial region being configured to mount a shaft sleeve~~, and at least one groove indented at the external surface and positioned at the~~

~~tapered axial region, the at least one groove being arranged to receive a pressurised fluid to facilitate mounting and dismounting of the sleeve at the shaft body~~; ~~and~~

a sleeve fitted over the tapered axial region, the sleeve having a tapered wall thickness such that a wall thickness at a second upper end of the sleeve is greater than a wall thickness at a first lower end of the sleeve; and

at least one groove indented at the external surface and positioned at the tapered axial region, the at least one groove being arranged to receive a pressurised fluid to facilitate mounting and dismounting of the sleeve at the shaft body.

REMARKS

Claims 1-5 and 8-14 have been amended. Accordingly, claims 1-14 are currently pending.

Claims 1-14 have been rejected under 35 U.S.C. 112 (b), second paragraph as being indefinite. Applicant respectfully submits that the amendments to the claims fully address the Examiner's objections.

Claims 1-14 have been rejected under 35 USC 102 as being anticipated by US 7,048,214 to Johnson.

Amended claims 1, 9 and 14 recite gyratory crusher main shaft having "a shaft body having a radially outward facing external surface, and a first end and a second end; an axial region of the shaft body extending from the second end and being tapered relative to a longitudinal axis of the shaft body such that a cross sectional area of the shaft body at the tapered axial region decreases in a direction from the first end to the second end; a shaft sleeve mounted on the tapered axial region; and at least one groove indented at the external surface and positioned at the tapered axial region, the at least one groove being arranged to receive a pressurised fluid to facilitate mounting and dismounting of the shaft sleeve at the shaft body."

The present crusher main shaft that enables the convenient mounting and dismounting of the protective sleeve at the upper end and obviates a requirement for excessive heating of the main shaft and the use of grinding and cutting apparatus. The shaft includes a combination of an upper end region of the shaft being tapered so as to mount a correspondingly tapered protective sleeve with a groove being intended/recessed into the external surface of this tapered region of the main shaft.

As will be appreciated and as detailed in the specification as filed, sleeve 124 is a wear part and is configured to protect the region 113 of main shaft 107 as it rotates within the central boss 117. As detailed in the specification as filed page 3 lines 7 to 10, the present configuration, with the groove 121 indented specifically at the external surface 200 of the main shaft as opposed to being recessed into the sleeve 124 at the main shaft 107 maintains the strength and integrity of the sleeve and avoid it splitting in response to the introduction of the pressurized fluid between the main shaft and the sleeve.

Johnson does not disclose or suggest "at least one groove indented at the external surface and positioned at the tapered axial region, the at least one groove being arranged to receive a pressurised fluid to facilitate mounting and dismounting of the shaft sleeve at the shaft body." As shown below, groove 121 indented specifically at the external surface 200 of the main shaft as opposed to being recessed into the sleeve 124 at the main shaft 107.

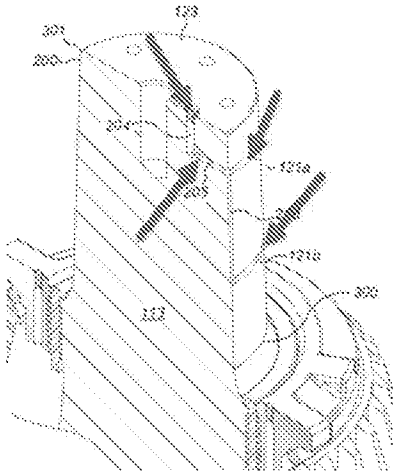

As indicated above, none of the cited art describe a main shaft having a tapered upper end with a groove indented into the tapered region of the main shaft.

With regard to claim 2. Johnson does not disclose "a fluid inlet conduit extending axially from the second end and provided in fluid communication with the at least one groove to allow a fluid to be supplied to the at least one groove from the second end." See also claims 12 and 13.

The groove of Johnson (39) does not appear to be connected with an internal groove or groove 55 and arranged to receive a pressurised fluid to facilitate mounting and dismounting of the shaft sleeve at the shaft body

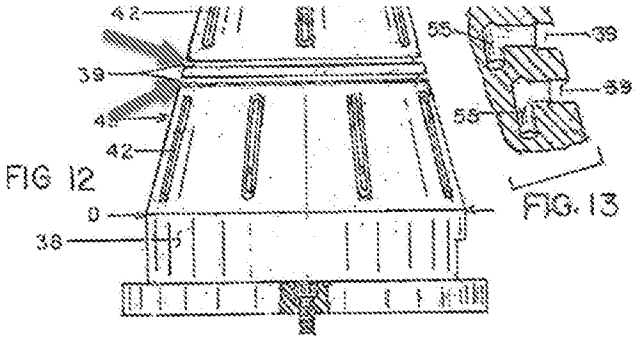

FIG 12 FIG. 13

With regard to claim 3, Johnson's groove is in the middle of the main shaft and not Ours ends up on the top surface of the main shaft. (Claim 3)

The grooves of Johnson does not have a fluid communication. (Claim 7, 8, 12 and 13), nor does Johnson disclose a "sleeve fitted over the tapered axial region, the sleeve having a tapered wall thickness, such that the wall thickness at a second end of the sleeve is greater than the wall thickness at a first end of the sleeve (Claim 9).

Accordingly, claims 1-14 are not anticipated by Johnson.

Claims 1-14 have been rejected under 35 USC 103 as being unpatentable over Applicant's Admitted Prior Art in view of Johnson.

Johnson does not obviate the missing claim elements of a "shaft sleeve mounted on the tapered axial region" and "at least one groove indented at the external surface and positioned at the tapered axial region, the at least one groove being arranged to receive a pressurised fluid to facilitate mounting and dismounting of the shaft sleeve at the shaft body," as set forth above.

Given the above, Applicant respectfully submits that the claims are allowable over the cited prior art. A prompt passage to issuance is therefore earnestly solicited.

Although Applicant believes that no additional fees are due in connection with this response, the Commissioner is hereby authorized to charge Applicant's Deposit Account No. 505792 for any fees due, or credit any overpayment, required to make this request timely and acceptable to the Office.

Respectfully submitted,

/Corinne Gorski/

_____

Corinne Gorski
Registration No. 34,339

Sandvik Intellectual Property
4730 Consulate Plaza Drive
Suite 190
Houston, TX 77032
Tel. 703-505-4761

UNITED STATES PATENT AND TRADEMARK OFFICE

UNITED STATES DEPARTMENT OF COMMERCE
United States Patent and Trademark Office
Address: COMMISSIONER FOR PATENTS
P.O. Box 1450
Alexandria, Virginia 22313-1450
www.uspto.gov

NOTICE OF ALLOWANCE AND FEE(S) DUE

78686 7590 03/25/2019

Sandvik Intellectual Property
4730 Consulate Plaza Drive
Suite 190
Houston, TX 77032

EXAMINER
FRANCIS, FAYE

ART UNIT	PAPER NUMBER
3725	

DATE MAILED: 03/25/2019

APPLICATION NO.	FILING DATE	FIRST NAMED INVENTOR	ATTORNEY DOCKET NO.	CONFIRMATION NO.
15/035,774	05/11/2016	Axel BERGMAN	SC 14208WOUS	3999

TITLE OF INVENTION: GYRATORY CRUSHER MAIN SHAFT AND ASSEMBLY

APPLN. TYPE	ENTITY STATUS	ISSUE FEE DUE	PUBLICATION FEE DUE	PREV. PAID ISSUE FEE	TOTAL FEE(S) DUE	DATE DUE
nonprovisional	UNDISCOUNTED	$1000	$0.00	$0.00	$1000	06/25/2019

THE APPLICATION IDENTIFIED ABOVE HAS BEEN EXAMINED AND IS ALLOWED FOR ISSUANCE AS A PATENT. PROSECUTION ON THE MERITS IS CLOSED. THIS NOTICE OF ALLOWANCE IS NOT A GRANT OF PATENT RIGHTS. THIS APPLICATION IS SUBJECT TO WITHDRAWAL FROM ISSUE AT THE INITIATIVE OF THE OFFICE OR UPON PETITION BY THE APPLICANT. SEE 37 CFR 1.313 AND MPEP 1308.

THE ISSUE FEE AND PUBLICATION FEE (IF REQUIRED) MUST BE PAID WITHIN THREE MONTHS FROM THE MAILING DATE OF THIS NOTICE OR THIS APPLICATION SHALL BE REGARDED AS ABANDONED. THIS STATUTORY PERIOD CANNOT BE EXTENDED. SEE 35 U.S.C. 151. THE ISSUE FEE DUE INDICATED ABOVE DOES NOT REFLECT A CREDIT FOR ANY PREVIOUSLY PAID ISSUE FEE IN THIS APPLICATION. IF AN ISSUE FEE HAS PREVIOUSLY BEEN PAID IN THIS APPLICATION (AS SHOWN ABOVE), THE RETURN OF PART B OF THIS FORM WILL BE CONSIDERED A REQUEST TO REAPPLY THE PREVIOUSLY PAID ISSUE FEE TOWARD THE ISSUE FEE NOW DUE.

HOW TO REPLY TO THIS NOTICE:

I. Review the ENTITY STATUS shown above. If the ENTITY STATUS is shown as SMALL or MICRO, verify whether entitlement to that entity status still applies.

If the ENTITY STATUS is the same as shown above, pay the TOTAL FEE(S) DUE shown above.

If the ENTITY STATUS is changed from that shown above, on PART B - FEE(S) TRANSMITTAL, complete section number 5 titled "Change in Entity Status (from status indicated above)".

For purposes of this notice, small entity fees are 1/2 the amount of undiscounted fees, and micro entity fees are 1/2 the amount of small entity fees.

II. PART B - FEE(S) TRANSMITTAL, or its equivalent, must be completed and returned to the United States Patent and Trademark Office (USPTO) with your ISSUE FEE and PUBLICATION FEE (if required). If you are charging the fee(s) to your deposit account, section "4b" of Part B - Fee(s) Transmittal should be completed and an extra copy of the form should be submitted. If an equivalent of Part B is filed, a request to reapply a previously paid issue fee must be clearly made, and delays in processing may occur due to the difficulty in recognizing the paper as an equivalent of Part B.

III. All communications regarding this application must give the application number. Please direct all communications prior to issuance to Mail Stop ISSUE FEE unless advised to the contrary.

IMPORTANT REMINDER: Maintenance fees are due in utility patents issuing on applications filed on or after Dec. 12, 1980. It is patentee's responsibility to ensure timely payment of maintenance fees when due. More information is available at www.uspto.gov/PatentMaintenanceFees.

PART B - FEE(S) TRANSMITTAL

Complete and send this form, together with applicable fee(s), by mail or fax, or via EFS-Web.

By mail, send to: Mail Stop ISSUE FEE
Commissioner for Patents
P.O. Box 1450
Alexandria, Virginia 22313-1450

By fax, send to: (571)-273-2885

INSTRUCTIONS: This form should be used for transmitting the ISSUE FEE and PUBLICATION FEE (if required). Blocks 1 through 5 should be completed where appropriate. All further correspondence including the Patent, advance orders and notification of maintenance fees will be mailed to the current correspondence address as indicated unless corrected below or directed otherwise in Block 1, by (a) specifying a new correspondence address; and/or (b) indicating a separate "FEE ADDRESS" for maintenance fee notifications.

CURRENT CORRESPONDENCE ADDRESS (Note: Use Block 1 for any change of address)

78686 7590 03/25/2019

Sandvik Intellectual Property
4730 Consulate Plaza Drive
Suite 190
Houston, TX 77032

Note: A certificate of mailing can only be used for domestic mailings of the Fee(s) Transmittal. This certificate cannot be used for any other accompanying papers. Each additional paper, such as an assignment or formal drawing, must have its own certificate of mailing or transmission.

Certificate of Mailing or Transmission

I hereby certify that this Fee(s) Transmittal is being deposited with the United States Postal Service with sufficient postage for first class mail in an envelope addressed to the Mail Stop ISSUE FEE address above, or being transmitted to the USPTO via EFS-Web or by facsimile to (571) 273-2885, on the date below.

(Typed or printed name)
(Signature)
(Date)

APPLICATION NO.	FILING DATE	FIRST NAMED INVENTOR	ATTORNEY DOCKET NO.	CONFIRMATION NO.
15/035,774	05/11/2016	Axel BERGMAN	SC 14208WOUS	3999

TITLE OF INVENTION: GYRATORY CRUSHER MAIN SHAFT AND ASSEMBLY

APPLN. TYPE	ENTITY STATUS	ISSUE FEE DUE	PUBLICATION FEE DUE	PREV. PAID ISSUE FEE	TOTAL FEE(S) DUE	DATE DUE
nonprovisional	UNDISCOUNTED	$1000	$0.00	$0.00	$1000	06/25/2019

EXAMINER	ART UNIT	CLASS-SUBCLASS
FRANCIS, FAYE	3725	241-209000

1. Change of correspondence address or indication of "Fee Address" (37 CFR 1.363).

❑ Change of correspondence address (or Change of Correspondence Address form PTO/SB/122) attached.

❑ "Fee Address" indication (or "Fee Address" Indication form PTO/SB/47; Rev 03-09 or more recent) attached. **Use of a Customer Number is required.**

2. For printing on the patent front page, list
(1) The names of up to 3 registered patent attorneys or agents OR, alternatively,
(2) The name of a single firm (having as a member a registered attorney or agent) and the names of up to 2 registered patent attorneys or agents. If no name is listed, no name will be printed.

1 _____
2 _____
3 _____

3. ASSIGNEE NAME AND RESIDENCE DATA TO BE PRINTED ON THE PATENT (print or type)

PLEASE NOTE: Unless an assignee is identified below, no assignee data will appear on the patent. If an assignee is identified below, the document must have been previously recorded, or filed for recordation, as set forth in 37 CFR 3.11 and 37 CFR 3.81(a). Completion of this form is NOT a substitute for filing an assignment.

(A) NAME OF ASSIGNEE (B) RESIDENCE: (CITY and STATE OR COUNTRY)

Please check the appropriate assignee category or categories (will not be printed on the patent) : ❑ Individual ❑ Corporation or other private group entity ❑ Government

4a. Fees submitted: ❑ Issue Fee ❑ Publication Fee (if required) ❑ Advance Order - # of Copies _____

4b. Method of Payment: *(Please first reapply any previously paid fee shown above)*

❑ Electronic Payment via EFS-Web ❑ Enclosed check ❑ Non-electronic payment by credit card (Attach form PTO-2038)

❑ The Director is hereby authorized to charge the required fee(s), any deficiency, or credit any overpayment to Deposit Account No. _____

5. **Change in Entity Status** (from status indicated above)

❑ Applicant certifying micro entity status. See 37 CFR 1.29

❑ Applicant asserting small entity status. See 37 CFR 1.27

❑ Applicant changing to regular undiscounted fee status.

NOTE: Absent a valid certification of Micro Entity Status (see forms PTO/SB/15A and 15B), issue fee payment in the micro entity amount will not be accepted at the risk of application abandonment.
NOTE: If the application was previously under micro entity status, checking this box will be taken to be a notification of loss of entitlement to micro entity status.
NOTE: Checking this box will be taken to be a notification of loss of entitlement to small or micro entity status, as applicable.

NOTE: This form must be signed in accordance with 37 CFR 1.31 and 1.33. See 37 CFR 1.4 for signature requirements and certifications.

Authorized Signature _____ Date _____

Typed or printed name _____ Registration No. _____

UNITED STATES PATENT AND TRADEMARK OFFICE

UNITED STATES DEPARTMENT OF COMMERCE
United States Patent and Trademark Office
Address: COMMISSIONER FOR PATENTS
P.O. Box 1450
Alexandria, Virginia 22313-1450
www.uspto.gov

APPLICATION NO.	FILING DATE	FIRST NAMED INVENTOR	ATTORNEY DOCKET NO.	CONFIRMATION NO.
15/035,774	05/11/2016	Axel BERGMAN	SC 14208WOUS	3999

78686 7590 03/25/2019

Sandvik Intellectual Property
4730 Consulate Plaza Drive
Suite 190
Houston, TX 77032

EXAMINER	
FRANCIS, FAYE	
ART UNIT	PAPER NUMBER
3725	

DATE MAILED: 03/25/2019

Determination of Patent Term Adjustment under 35 U.S.C. 154 (b)
(Applications filed on or after May 29, 2000)

The Office has discontinued providing a Patent Term Adjustment (PTA) calculation with the Notice of Allowance.

Section 1(h)(2) of the AIA Technical Corrections Act amended 35 U.S.C. 154(b)(3)(B)(i) to eliminate the requirement that the Office provide a patent term adjustment determination with the notice of allowance. See Revisions to Patent Term Adjustment, 78 Fed. Reg. 19416, 19417 (Apr. 1, 2013). Therefore, the Office is no longer providing an initial patent term adjustment determination with the notice of allowance. The Office will continue to provide a patent term adjustment determination with the Issue Notification Letter that is mailed to applicant approximately three weeks prior to the issue date of the patent, and will include the patent term adjustment on the patent. Any request for reconsideration of the patent term adjustment determination (or reinstatement of patent term adjustment) should follow the process outlined in 37 CFR 1.705.

Any questions regarding the Patent Term Extension or Adjustment determination should be directed to the Office of Patent Legal Administration at (571)-272-7702. Questions relating to issue and publication fee payments should be directed to the Customer Service Center of the Office of Patent Publication at 1-(888)-786-0101 or (571)-272-4200.

OMB Clearance and PRA Burden Statement for PTOL-85 Part B

The Paperwork Reduction Act (PRA) of 1995 requires Federal agencies to obtain Office of Management and Budget approval before requesting most types of information from the public. When OMB approves an agency request to collect information from the public, OMB (i) provides a valid OMB Control Number and expiration date for the agency to display on the instrument that will be used to collect the information and (ii) requires the agency to inform the public about the OMB Control Number's legal significance in accordance with 5 CFR 1320.5(b).

The information collected by PTOL-85 Part B is required by 37 CFR 1.311. The information is required to obtain or retain a benefit by the public which is to file (and by the USPTO to process) an application. Confidentiality is governed by 35 U.S.C. 122 and 37 CFR 1.14. This collection is estimated to take 30 minutes to complete, including gathering, preparing, and submitting the completed application form to the USPTO. Time will vary depending upon the individual case. Any comments on the amount of time you require to complete this form and/or suggestions for reducing this burden, should be sent to the Chief Information Officer, U.S. Patent and Trademark Office, U.S. Department of Commerce, P.O. Box 1450, Alexandria, Virginia 22313-1450. DO NOT SEND FEES OR COMPLETED FORMS TO THIS ADDRESS. SEND TO: Commissioner for Patents, P.O. Box 1450, Alexandria, Virginia 22313-1450. Under the Paperwork Reduction Act of 1995, no persons are required to respond to a collection of information unless it displays a valid OMB control number.

Privacy Act Statement

The Privacy Act of 1974 (P.L. 93-579) requires that you be given certain information in connection with your submission of the attached form related to a patent application or patent. Accordingly, pursuant to the requirements of the Act, please be advised that: (1) the general authority for the collection of this information is 35 U.S.C. 2(b)(2); (2) furnishing of the information solicited is voluntary; and (3) the principal purpose for which the information is used by the U.S. Patent and Trademark Office is to process and/or examine your submission related to a patent application or patent. If you do not furnish the requested information, the U.S. Patent and Trademark Office may not be able to process and/or examine your submission, which may result in termination of proceedings or abandonment of the application or expiration of the patent.

The information provided by you in this form will be subject to the following routine uses:

1. The information on this form will be treated confidentially to the extent allowed under the Freedom of Information Act (5 U.S.C. 552) and the Privacy Act (5 U.S.C 552a). Records from this system of records may be disclosed to the Department of Justice to determine whether disclosure of these records is required by the Freedom of Information Act.
2. A record from this system of records may be disclosed, as a routine use, in the course of presenting evidence to a court, magistrate, or administrative tribunal, including disclosures to opposing counsel in the course of settlement negotiations.
3. A record in this system of records may be disclosed, as a routine use, to a Member of Congress submitting a request involving an individual, to whom the record pertains, when the individual has requested assistance from the Member with respect to the subject matter of the record.
4. A record in this system of records may be disclosed, as a routine use, to a contractor of the Agency having need for the information in order to perform a contract. Recipients of information shall be required to comply with the requirements of the Privacy Act of 1974, as amended, pursuant to 5 U.S.C. 552a(m).
5. A record related to an International Application filed under the Patent Cooperation Treaty in this system of records may be disclosed, as a routine use, to the International Bureau of the World Intellectual Property Organization, pursuant to the Patent Cooperation Treaty.
6. A record in this system of records may be disclosed, as a routine use, to another federal agency for purposes of National Security review (35 U.S.C. 181) and for review pursuant to the Atomic Energy Act (42 U.S.C. 218(c)).
7. A record from this system of records may be disclosed, as a routine use, to the Administrator, General Services, or his/her designee, during an inspection of records conducted by GSA as part of that agency's responsibility to recommend improvements in records management practices and programs, under authority of 44 U.S.C. 2904 and 2906. Such disclosure shall be made in accordance with the GSA regulations governing inspection of records for this purpose, and any other relevant (i.e., GSA or Commerce) directive. Such disclosure shall not be used to make determinations about individuals.
8. A record from this system of records may be disclosed, as a routine use, to the public after either publication of the application pursuant to 35 U.S.C. 122(b) or issuance of a patent pursuant to 35 U.S.C. 151. Further, a record may be disclosed, subject to the limitations of 37 CFR 1.14, as a routine use, to the public if the record was filed in an application which became abandoned or in which the proceedings were terminated and which application is referenced by either a published application, an application open to public inspection or an issued patent.
9. A record from this system of records may be disclosed, as a routine use, to a Federal, State, or local law enforcement agency, if the USPTO becomes aware of a violation or potential violation of law or regulation.

Notice of Allowability	Application No. 15/035,774	Applicant(s) BERGMAN et al.	
	Examiner FAYE FRANCIS	Art Unit 3725	AIA (FITF) Status Yes

-- The MAILING DATE of this communication appears on the cover sheet with the correspondence address--

All claims being allowable, PROSECUTION ON THE MERITS IS (OR REMAINS) CLOSED in this application. If not included herewith (or previously mailed), a Notice of Allowance (PTOL-85) or other appropriate communication will be mailed in due course. **THIS NOTICE OF ALLOWABILITY IS NOT A GRANT OF PATENT RIGHTS.** This application is subject to withdrawal from issue at the initiative of the Office or upon petition by the applicant. See 37 CFR 1.313 and MPEP 1308.

1. ☑ This communication is responsive to amendment filed on 1/25/19.
   ☐ A declaration(s)/affidavit(s) under **37 CFR 1.130(b)** was/were filed on _____.

2. ☐ An election was made by the applicant in response to a restriction requirement set forth during the interview on _____; the restriction requirement and election have been incorporated into this action.

3. ☑ The allowed claim(s) is/are 1-14 . As a result of the allowed claim(s), you may be eligible to benefit from the **Patent Prosecution Highway** program at a participating intellectual property office for the corresponding application. For more information, please see **http://www.uspto.gov/patents/init_events/pph/index.jsp** or send an inquiry to **PPHfeedback@uspto.gov.**

4. ☑ Acknowledgment is made of a claim for foreign priority under 35 U.S.C. § 119(a)-(d) or (f).

   Certified copies:

   a) ☑ All b) ☐ Some *c) ☐ None of the:

   1. ☑ Certified copies of the priority documents have been received.
   2. ☐ Certified copies of the priority documents have been received in Application No. _____ .
   3. ☐ Copies of the certified copies of the priority documents have been received in this national stage application from the International Bureau (PCT Rule 17.2(a)).

   * Certified copies not received: _____ .

Applicant has THREE MONTHS FROM THE "MAILING DATE" of this communication to file areply complying with the requirements noted below. Failure to timely comply will result in ABANDONMENT of this application.
THIS THREE-MONTH PERIOD IS NOT EXTENDABLE.

5. ☐ CORRECTED DRAWINGS (as "replacement sheets") must be submitted.
   ☐ including changes required by the attached Examiner's Amendment / Comment or in the Office action of Paper No./Mail Date _____ .

   Identifying indicia such as the application number (see 37 CFR 1.84(c)) should be written on the drawings in the front (not the back) of each sheet. Replacement sheet(s) should be labeled as such in the header according to 37 CFR 1.121(d).

6. ☐ DEPOSIT OF and/or INFORMATION about the deposit of BIOLOGICAL MATERIAL must be submitted. Note the attached Examiner's comment regarding REQUIREMENT FOR THE DEPOSIT OF BIOLOGICAL MATERIAL.

Attachment(s)

1. ☐ Notice of References Cited (PTO-892)
2. ☐ Information Disclosure Statements (PTO/SB/08), Paper No./Mail Date _____.
3. ☐ Examiner's Comment Regarding Requirement for Deposit of Biological Material _____.
4. ☐ Interview Summary (PTO-413), Paper No./Mail Date. _____.
5. ☐ Examiner's Amendment/Comment
6. ☑ Examiner's Statement of Reasons for Allowance
7. ☐ Other _____.

/FAYE FRANCIS/
Primary Examiner, Art Unit 3725

Notice of Pre-AIA or AIA Status

1. The present application, filed on or after March 16, 2013, is being examined under the first inventor to file provisions of the AIA.

Allowable Subject Matter

2. Claims 1-14 are allowed.

The following is an examiner's statement of reasons for allowance: a review of the claims and the applicant's argument indicates that the claims distinguish over the prior art of record. Accordingly, withdrawal of all outstanding rejections is warranted in this case.

Any comments considered necessary by applicant must be submitted no later than the payment of the issue fee and, to avoid processing delays, should preferably accompany the issue fee. Such submissions should be clearly labeled "Comments on Statement of Reasons for Allowance."

3. Any inquiry concerning this communication or earlier communications from the examiner should be directed to FAYE FRANCIS whose telephone number is (571)272-4423. The examiner can normally be reached on M-F 9:00-5:00.

Examiner interviews are available via telephone, in-person, and video conferencing using a USPTO supplied web-based collaboration tool. To schedule an interview, applicant is encouraged to use the USPTO Automated Interview Request (AIR) at http://www.uspto.gov/interviewpractice.

If attempts to reach the examiner by telephone are unsuccessful, the examiner's supervisor, Shelly self can be reached on 5712724520. The fax phone number for the organization where this application or proceeding is assigned is 571-273-8300.

Information regarding the status of an application may be obtained from the Patent Application Information Retrieval (PAIR) system. Status information for published applications may be obtained from either Private PAIR or Public PAIR. Status information for unpublished applications is available through Private PAIR only. For more information about the PAIR system, see http://pair-direct.uspto.gov. Should you have questions on access to the Private PAIR system, contact the Electronic Business Center (EBC) at 866-217-9197 (toll-free). If you would like assistance from a USPTO Customer Service Representative or access to the automated information system, call 800-786-9199 (IN USA OR CANADA) or 571-272-1000.

/FAYE FRANCIS/
Primary Examiner, Art Unit 3725

Search Notes	Application/Control No.	Applicant(s)/Patent Under Reexamination
	15/035,774	BERGMAN et al.
	Examiner	Art Unit
	FAYE FRANCIS	3725

CPC - Searched*		
Symbol	Date	Examiner
B02C2/02, 04, 06	9/19/2018	FF
Updated.	03/18/2019	FF

CPC Combination Sets - Searched*		
Symbol	Date	Examiner

US Classification - Searched*			
Class	Subclass	Date	Examiner
241	207-209	9/19/2018	FF
Updated.		03/18/2019	FF

* See search history printout included with this form or the SEARCH NOTES box below to determine the scope of the search.

Search Notes		
Search Notes	Date	Examiner
B02C2/02, 04, 06	9/19/2018	FF
Inventors name search done.	03/18/2019	FF

Interference Search			
US Class/CPC Symbol	US Subclass/CPC Group	Date	Examiner
	Same as above.	03/18/2019	FF

Issue Classification	Application/Control No.	Applicant(s)/Patent Under Reexamination
	15/035,774	BERGMAN et al.
	Examiner	**Art Unit**
	FAYE FRANCIS	3725

CPC							
Symbol						**Type**	**Version**
B02C	/	2	/	06		F	2013-01-01
B02C	/	2	/	04		I	2013-01-01
B02C	/	2	/	02		I	2013-01-01

CPC Combination Sets								
Symbol					**Type**	**Set**	**Ranking**	**Version**
	/		/					

NONE		Total Claims Allowed:	
(Assistant Examiner)	(Date)	14	
/FAYE FRANCIS/ Primary Examiner, Art Unit 3725	18 March 2019	O.G. Print Claim(s)	O.G. Print Figure
(Primary Examiner)	(Date)	1	3

U.S. Patent and Trademark Office — Part of Paper No.: 20190318

Issue Classification	Application/Control No.	Applicant(s)/Patent Under Reexamination
	15/035,774	BERGMAN et al.
	Examiner	**Art Unit**
	FAYE FRANCIS	3725

INTERNATIONAL CLASSIFICATION					
CLAIMED					
B02C	/	2	/	00	
NON-CLAIMED					
	/		/		

US ORIGINAL CLASSIFICATION	
CLASS	**SUBCLASS**

CROSS REFERENCES(S)						
CLASS	**SUBCLASS (ONE SUBCLASS PER BLOCK)**					

NONE		**Total Claims Allowed:**	
(Assistant Examiner)	(Date)	14	
/FAYE FRANCIS/ Primary Examiner, Art Unit 3725	18 March 2019	O.G. Print Claim(s)	O.G. Print Figure
(Primary Examiner)	(Date)	1	3

Issue Classification	Application/Control No.	Applicant(s)/Patent Under Reexamination
	15/035,774	BERGMAN et al.
	Examiner	**Art Unit**
	FAYE FRANCIS	3725

☑ Claims renumbered in the same order as presented by applicant ☐ CPA ☐ T.D. ☐ R.1.47

CLAIMS

Final	Original	Final	Original	Final	Original	Final	Original	Final	Original	Final	Original	Final	Original	Final	Original
	1		10												
	2		11												
	3		12												
	4		13												
	5		14												
	6														
	7														
	8														
	9														

NONE		**Total Claims Allowed:**	
(Assistant Examiner)	(Date)	14	
/FAYE FRANCIS/ Primary Examiner, Art Unit 3725	18 March 2019	O.G. Print Claim(s)	O.G. Print Figure
(Primary Examiner)	(Date)	1	3

UNITED STATES PATENT AND TRADEMARK OFFICE

UNITED STATES DEPARTMENT OF COMMERCE
United States Patent and Trademark Office
Address: COMMISSIONER FOR PATENTS
P.O. Box 1450
Alexandria, Virginia 22313-1450
www.uspto.gov

BIB DATA SHEET

CONFIRMATION NO. 3999

SERIAL NUMBER	FILING or 371(c) DATE RULE	CLASS	GROUP ART UNIT	ATTORNEY DOCKET NO.
15/035,774	05/11/2016	241	3725	SC 14208WOUS

APPLICANTS

SANDVIK INTELECTUAL PROPERTY AB, Sandviken, SWEDEN;

INVENTORS

Axel BERGMAN, Malmo, SWEDEN;
Mikael M LARSSON, Eslov, SWEDEN;
Patric MALMQVIST, Svedala, SWEDEN;
Anders HALLBERG, Sodra Sandby, SWEDEN;
Matts-Ake NILSSON, Gards Kopinge, SWEDEN;
Fredrik ERIKSSON, Malmo, SWEDEN;
Bengt-Arne ERIKSSON, Svedala, SWEDEN;
Anne HOLOMBERG, Loddekopinge, SWEDEN;

**** CONTINUING DATA ***************************

This application is a 371 of PCT/EP2014/060594 05/23/2014

**** FOREIGN APPLICATIONS ***************************

EUROPEAN PATENT OFFICE (EPO) 13192402.9 11/12/2013

**** IF REQUIRED, FOREIGN FILING LICENSE GRANTED ****

06/11/2016

Foreign Priority claimed ☑ Yes ☐ No 35 USC 119(a-d) conditions met ☑ Yes ☐ No Verified and Acknowledged /FAYE FRANCIS/ Examiner's Signature	☐ Met after Allowance Initials	STATE OR COUNTRY	SHEETS DRAWINGS	TOTAL CLAIMS	INDEPENDENT CLAIMS
		SWEDEN	6	14	1

ADDRESS

Sandvik Intellectual Property
4730 Consulate Plaza Drive
Suite 190
Houston, TX 77032
UNITED STATES

TITLE

GYRATORY CRUSHER MAIN SHAFT AND ASSEMBLY

FILING FEE RECEIVED		
1620	FEES: Authority has been given in Paper No._____ to charge/credit DEPOSIT ACCOUNT No._____ for following:	☐ All Fees ☐ 1.16 Fees (Filing) ☐ 1.17 Fees (Processing Ext. of time) ☐ 1.18 Fees (Issue) ☐ Other _____ ☐ Credit

EAST Search History

EAST Search History (Prior Art)

Ref #	Hits	Search Query	DBs	Default Operator	Plurals	Time Stamp
L1	60	((("BERGMAN") near3 ("Axel"))).INV.	US-PGPUB; USPAT; USOCR	OR	ON	2019/03/18 11:24
L2	24	((("LARSSON") near3 ("Mikael") near3 ("M"))).INV.	US-PGPUB; USPAT; USOCR	OR	ON	2019/03/18 11:24
L3	34	((("MALMQVIST") near3 ("Patric"))).INV.	US-PGPUB; USPAT; USOCR	OR	ON	2019/03/18 11:24
L4	39	((("HALLBERG") near3 ("Anders"))).INV.	US-PGPUB; USPAT; USOCR	OR	ON	2019/03/18 11:24
L5	2	((("NILSSON") near3 ("Matts-Ake"))).INV.	US-PGPUB; USPAT; USOCR	OR	ON	2019/03/18 11:25
L6	25	((("ERIKSSON") near3 ("Fredrik"))).INV.	US-PGPUB; USPAT; USOCR	OR	ON	2019/03/18 11:25
L7	57	((("ERIKSSON") near3 ("Bengt-Arne"))).INV.	US-PGPUB; USPAT; USOCR	OR	ON	2019/03/18 11:25
L8	1	((("HOLOMBERG") near3 ("Anne"))).INV.	US-PGPUB; USPAT; USOCR	OR	ON	2019/03/18 11:25
L9	1402	B02C2/06.cpc.	US-PGPUB; USPAT; USOCR; FPRS; EPO; JPO; DERWENT; IBM_TDB	OR	ON	2019/03/18 11:26
L10	1511	B02C2/04.cpc.	US-PGPUB; USPAT; USOCR; FPRS; EPO; JPO; DERWENT; IBM_TDB	OR	ON	2019/03/18 11:26
L11	250	B02C2/02.cpc.	US-PGPUB; USPAT; USOCR; FPRS; EPO; JPO; DERWENT; IBM_TDB	OR	ON	2019/03/18 11:26
L12	958	(241/207-209).CCLS.	US-PGPUB; USPAT; USOCR; FPRS; EPO; JPO; DERWENT; IBM_TDB	OR	OFF	2019/03/18 11:27
L13	35	L12 and ((oil or lubric$4) near5 (groove or channel))	US-PGPUB; USPAT; USOCR; FPRS; EPO; JPO; DERWENT; IBM_TDB	OR	ON	2019/03/18 11:27
L15	9	("2916218" | "20090008489" | "3891153" | "5718391" | "5944265" | "6213418" | "7048214" | "7922109" | "RE27970").PN.	US-PGPUB; USPAT	OR	ON	2019/03/18 11:37
S1	8	("1402255" | "1592313" | "1748102" | "20020088885" |	US-PGPUB; USPAT	OR	ON	2018/09/17 17:57

		"3456889" | "3813047" | "4027825" | "5934583").PN.				
S2	57	((("BERGMAN") near3 ("Axel"))).INV.	US-PGPUB; USPAT; USOCR	OR	ON	2018/09/17 17:58
S3	21	((("LARSSON") near3 ("Mikael") near3 ("M"))).INV.	US-PGPUB; USPAT; USOCR	OR	ON	2018/09/17 17:58
S4	31	((("MALMQVIST") near3 ("Patric"))).INV.	US-PGPUB; USPAT; USOCR	OR	ON	2018/09/17 17:58
S5	39	((("HALLBERG") near3 ("Anders"))).INV.	US-PGPUB; USPAT; USOCR	OR	ON	2018/09/17 17:58
S6	2	((("NILSSON") near3 ("Matts-Ake"))).INV.	US-PGPUB; USPAT; USOCR	OR	ON	2018/09/17 17:58
S7	23	((("ERIKSSON") near3 ("Fredrik"))).INV.	US-PGPUB; USPAT; USOCR	OR	ON	2018/09/17 17:58
S8	54	((("ERIKSSON") near3 ("Bengt-Arne"))).INV.	US-PGPUB; USPAT; USOCR	OR	ON	2018/09/17 17:59
S9	1	((("HOLOMBERG") near3 ("Anne"))).INV.	US-PGPUB; USPAT; USOCR	OR	ON	2018/09/17 17:59
S10	1318	B02C2/06.cpc.	US-PGPUB; USPAT; USOCR; FPRS; EPO; JPO; DERWENT; IBM_TDB	OR	ON	2018/09/17 18:00
S11	1363	B02C2/04.cpc.	US-PGPUB; USPAT; USOCR; FPRS; EPO; JPO; DERWENT; IBM_TDB	OR	ON	2018/09/17 18:00
S12	189	B02C2/02.cpc.	US-PGPUB; USPAT; USOCR; FPRS; EPO; JPO; DERWENT; IBM_TDB	OR	ON	2018/09/17 18:00
S13	947	(241/207-209).CCLS.	US-PGPUB; USPAT; USOCR; FPRS; EPO; JPO; DERWENT; IBM_TDB	OR	OFF	2018/09/19 13:41
S14	35	S13 and ((oil or lubric$4) near5 (groove or channel))	US-PGPUB; USPAT; USOCR; FPRS; EPO; JPO; DERWENT; IBM_TDB	OR	ON	2018/09/19 13:48
S15	0	((("BERGMAN") near3 ("Axel"))).INV. and ((oil or lubric$4) near5 (groove or channel))	US-PGPUB; USPAT; USOCR	OR	ON	2018/09/19 15:33
S16	2	((("BERGMAN") near3 ("Axel"))).INV. and (oil or lubric$4)	US-PGPUB; USPAT; USOCR	OR	ON	2018/09/19 15:33
S17	0	((("LARSSON") near3 ("Mikael") near3 ("M"))).INV. and ((oil or lubric$4) near5 (groove or channel))	US-PGPUB; USPAT; USOCR	OR	ON	2018/09/19 15:33
S18	1	((("LARSSON") near3 ("Mikael") near3 ("M"))).INV. and (oil or lubric$4)	US-PGPUB; USPAT; USOCR	OR	ON	2018/09/19 15:34

S19	2	((("MALMQVIST") near3 ("Patric"))).INV. and (oil or lubric$4)	US-PGPUB; USPAT; USOCR	OR	ON	2018/09/19 15:34
S20	11	((("ERIKSSON") near3 ("Fredrik"))).INV. and (oil or lubric$4)	US-PGPUB; USPAT; USOCR	OR	ON	2018/09/19 15:35
S21	17	((("ERIKSSON") near3 ("Bengt-Arne"))).INV. and (oil or lubric$4)	US-PGPUB; USPAT; USOCR	OR	ON	2018/09/19 15:35
S22	13	B02C2/02.cpc. and ((oil or lubric$4) near5 (groove or channel))	US-PGPUB; USPAT; USOCR; FPRS; EPO; JPO; DERWENT; IBM_TDB	OR	ON	2018/09/19 15:37
S23	61	B02C2/04.cpc. and ((oil or lubric$4) near5 (groove or channel))	US-PGPUB; USPAT; USOCR; FPRS; EPO; JPO; DERWENT; IBM_TDB	OR	ON	2018/09/19 15:38

3/18/2019 12:27:57 PM
C:\Users\ffrancis\Documents\EAST\Workspaces\15035774.wsp

PART B - FEE(S) TRANSMITTAL

Complete and send this form, together with applicable fee(s), by mail or fax, or via EFS-Web.

By mail, send to: Mail Stop ISSUE FEE
Commissioner for Patents
P.O. Box 1450
Alexandria, Virginia 22313-1450

By fax, send to: (571)-273-2885

INSTRUCTIONS: This form should be used for transmitting the ISSUE FEE and PUBLICATION FEE (if required). Blocks 1 through 5 should be completed where appropriate. All further correspondence including the Patent, advance orders and notification of maintenance fees will be mailed to the current correspondence address as indicated unless corrected below or directed otherwise in Block 1, by (a) specifying a new correspondence address; and/or (b) indicating a separate "FEE ADDRESS" for maintenance fee notifications.

CURRENT CORRESPONDENCE ADDRESS (Note: Use Block 1 for any change of address)

78686 7590 03/25/2019
Sandvik Intellectual Property
4730 Consulate Plaza Drive
Suite 190
Houston, TX 77032

Note: A certificate of mailing can only be used for domestic mailings of the Fee(s) Transmittal. This certificate cannot be used for any other accompanying papers. Each additional paper, such as an assignment or formal drawing, must have its own certificate of mailing or transmission.

Certificate of Mailing or Transmission

I hereby certify that this Fee(s) Transmittal is being deposited with the United States Postal Service with sufficient postage for first class mail in an envelope addressed to the Mail Stop ISSUE FEE address above, or being transmitted to the USPTO via EFS-Web or by facsimile to (571) 273-2885, on the date below.

(Typed or printed name)
(Signature)
(Date)

APPLICATION NO.	FILING DATE	FIRST NAMED INVENTOR	ATTORNEY DOCKET NO.	CONFIRMATION NO.
15/035,774	05/11/2016	Axel BERGMAN	SC 14208WOUS	3999

TITLE OF INVENTION: GYRATORY CRUSHER MAIN SHAFT AND ASSEMBLY

APPLN. TYPE	ENTITY STATUS	ISSUE FEE DUE	PUBLICATION FEE DUE	PREV. PAID ISSUE FEE	TOTAL FEE(S) DUE	DATE DUE
nonprovisional	UNDISCOUNTED	$1000	$0.00	$0.00	$1000	06/25/2019

EXAMINER	ART UNIT	CLASS-SUBCLASS
FRANCIS, FAYE	3725	241-209000

1. Change of correspondence address or indication of "Fee Address" (37 CFR 1.363).

☐ Change of correspondence address (or Change of Correspondence Address form PTO/SB/122) attached.

☐ "Fee Address" indication (or "Fee Address" Indication form PTO/SB/47; Rev 03-09 or more recent) attached. **Use of a Customer Number is required.**

2. For printing on the patent front page, list
(1) The names of up to 3 registered patent attorneys or agents OR, alternatively,
(2) The name of a single firm (having as a member a registered attorney or agent) and the names of up to 2 registered patent attorneys or agents. If no name is listed, no name will be printed.

1 Corinne R. Gorski
2
3

3. ASSIGNEE NAME AND RESIDENCE DATA TO BE PRINTED ON THE PATENT (print or type)

PLEASE NOTE: Unless an assignee is identified below, no assignee data will appear on the patent. If an assignee is identified below, the document must have been previously recorded, or filed for recordation, as set forth in 37 CFR 3.11 and 37 CFR 3.81(a). Completion of this form is NOT a substitute for filing an assignment.

(A) NAME OF ASSIGNEE: SANDVIK INTELLECTUAL PROPERTY AB

(B) RESIDENCE: (CITY and STATE OR COUNTRY): SANDVIKEN, SE

Please check the appropriate assignee category or categories (will not be printed on the patent) : ☐ Individual ☒ Corporation or other private group entity ☐ Government

4a. Fees submitted: ☒ Issue Fee ☐ Publication Fee (if required) ☐ Advance Order - # of Copies _____

4b. Method of Payment: *(Please first reapply any previously paid fee shown above)*

☒ Electronic Payment via EFS-Web ☐ Enclosed check ☐ Non-electronic payment by credit card (Attach form PTO-2038)

☒ The Director is hereby authorized to charge the required fee(s), any deficiency, or credit any overpayment to Deposit Account No. 505792

5. **Change in Entity Status** (from status indicated above)

☐ Applicant certifying micro entity status. See 37 CFR 1.29

☐ Applicant asserting small entity status. See 37 CFR 1.27

☐ Applicant changing to regular undiscounted fee status.

NOTE: Absent a valid certification of Micro Entity Status (see forms PTO/SB/15A and 15B), issue fee payment in the micro entity amount will not be accepted at the risk of application abandonment.
NOTE: If the application was previously under micro entity status, checking this box will be taken to be a notification of loss of entitlement to micro entity status.
NOTE: Checking this box will be taken to be a notification of loss of entitlement to small or micro entity status, as applicable.

NOTE: This form must be signed in accordance with 37 CFR 1.31 and 1.33. See 37 CFR 1.4 for signature requirements and certifications.

Authorized Signature /Corinne R. Gorski/ Date May 28, 2019

Typed or printed name Corinne R. Gorski Registration No. 34339

Electronic Patent Application Fee Transmittal

Application Number:	15035774
Filing Date:	11-May-2016
Title of Invention:	GYRATORY CRUSHER MAIN SHAFT AND ASSEMBLY
First Named Inventor/Applicant Name:	Axel BERGMAN
Filer:	Corinne R. Gorski
Attorney Docket Number:	SC 14208WOUS

Filed as Large Entity

Filing Fees for U.S. National Stage under 35 USC 371

Description	Fee Code	Quantity	Amount	Sub-Total in USD($)
Basic Filing:				
Pages:				
Claims:				
Miscellaneous-Filing:				
Petition:				
Patent-Appeals-and-Interference:				
Post-Allowance-and-Post-Issuance:				
UTILITY APPL ISSUE FEE	1501	1	1000	1000

Description	Fee Code	Quantity	Amount	Sub-Total in USD($)
Extension-of-Time:				
Miscellaneous:				
			Total in USD ($)	**1000**

Electronic Acknowledgement Receipt

EFS ID:	36120346
Application Number:	15035774
International Application Number:	
Confirmation Number:	3999
Title of Invention:	GYRATORY CRUSHER MAIN SHAFT AND ASSEMBLY
First Named Inventor/Applicant Name:	Axel BERGMAN
Customer Number:	78686
Filer:	Corinne R. Gorski
Filer Authorized By:	
Attorney Docket Number:	SC 14208WOUS
Receipt Date:	28-MAY-2019
Filing Date:	11-MAY-2016
Time Stamp:	09:46:27
Application Type:	U.S. National Stage under 35 USC 371

Payment information:

Submitted with Payment	yes
Payment Type	DA
Payment was successfully received in RAM	$1000
RAM confirmation Number	052819INTEFSW00017039505792
Deposit Account	505792
Authorized User	Corinne Gorski
The Director of the USPTO is hereby authorized to charge indicated fees and credit any overpayment as follows: 37 CFR 1.20 (Post Issuance fees) 37 CFR 1.21 (Miscellaneous fees and charges)	

File Listing:

Document Number	Document Description	File Name	File Size(Bytes)/ Message Digest	Multi Part /.zip	Pages (if appl.)
1	Issue Fee Payment (PTO-85B)	14208WOUSIssueFeePartB.pdf	130315 04a638e3ee64ff09723dc8964f31d660b6de0d4c	no	1
Warnings:					
Information:					
2	Fee Worksheet (SB06)	fee-info.pdf	30240 9f44ace4cfd07e3f37b4a14ed63f1e6297a99008	no	2
Warnings:					
Information:					
		Total Files Size (in bytes):	160555		

This Acknowledgement Receipt evidences receipt on the noted date by the USPTO of the indicated documents, characterized by the applicant, and including page counts, where applicable. It serves as evidence of receipt similar to a Post Card, as described in MPEP 503.

New Applications Under 35 U.S.C. 111

If a new application is being filed and the application includes the necessary components for a filing date (see 37 CFR 1.53(b)-(d) and MPEP 506), a Filing Receipt (37 CFR 1.54) will be issued in due course and the date shown on this Acknowledgement Receipt will establish the filing date of the application.

National Stage of an International Application under 35 U.S.C. 371

If a timely submission to enter the national stage of an international application is compliant with the conditions of 35 U.S.C. 371 and other applicable requirements a Form PCT/DO/EO/903 indicating acceptance of the application as a national stage submission under 35 U.S.C. 371 will be issued in addition to the Filing Receipt, in due course.

New International Application Filed with the USPTO as a Receiving Office

If a new international application is being filed and the international application includes the necessary components for an international filing date (see PCT Article 11 and MPEP 1810), a Notification of the International Application Number and of the International Filing Date (Form PCT/RO/105) will be issued in due course, subject to prescriptions concerning national security, and the date shown on this Acknowledgement Receipt will establish the international filing date of the application.

UNITED STATES PATENT AND TRADEMARK OFFICE

UNITED STATES DEPARTMENT OF COMMERCE
United States Patent and Trademark Office
Address: COMMISSIONER FOR PATENTS
P.O. Box 1450
Alexandria, Virginia 22313-1450
www.uspto.gov

APPLICATION NUMBER	FILING OR 371(C) DATE	FIRST NAMED APPLICANT	ATTY. DOCKET NO./TITLE
15/035,774	05/11/2016	Axel BERGMAN	SC 14208WOUS

CONFIRMATION NO. 3999

78686
Sandvik Intellectual Property
4730 Consulate Plaza Drive
Suite 190
Houston, TX 77032

37 CFR 1.48(f)
ACKNOWLEDGEMENT LETTER

OC000000108575918

Date Mailed: 06/03/2019

IMPROPER SUBMISSION OF REQUEST UNDER 37 CFR 1.48(f)

The request under 37 CFR 1.48(f) (request to change inventorship) submitted on 07/13/2016 in the above-identified application is not accepted because:

- The request to correct inventorship under 37 CFR 1.48(f) is deficient because the fee set forth in 37 CFR 1.17(i) has not been submitted.

Questions about the contents of this notice and the requirements it sets forth should be directed to the Office of Data Management, Application Assistance Unit, at **(571) 272-4000** or **(571) 272-4200** or **1-888-786-0101**.

/ggasgedom/

UNITED STATES PATENT AND TRADEMARK OFFICE

UNITED STATES DEPARTMENT OF COMMERCE
United States Patent and Trademark Office
Address: COMMISSIONER FOR PATENTS
P.O. Box 1450
Alexandria, Virginia 22313-1450
www.uspto.gov

CORRECTED
NOTICE OF ALLOWANCE AND FEE(S) DUE

78686 7590 06/11/2019

Sandvik Intellectual Property
4730 Consulate Plaza Drive
Suite 190
Houston, TX 77032

EXAMINER
FRANCIS, FAYE

ART UNIT	PAPER NUMBER
3725	

DATE MAILED: 06/11/2019

APPLICATION NO.	FILING DATE	FIRST NAMED INVENTOR	ATTORNEY DOCKET NO.	CONFIRMATION NO.
15/035,774	05/11/2016	Axel BERGMAN	SC 14208WOUS	3999

TITLE OF INVENTION: GYRATORY CRUSHER MAIN SHAFT AND ASSEMBLY

APPLN. TYPE	ENTITY STATUS	ISSUE FEE DUE	PUBLICATION FEE DUE	PREV. PAID ISSUE FEE	TOTAL FEE(S) DUE	DATE DUE
nonprovisional	UNDISCOUNTED	$1000	$0	$1000	$1000	09/11/2019

THE APPLICATION IDENTIFIED ABOVE HAS BEEN EXAMINED AND IS ALLOWED FOR ISSUANCE AS A PATENT. PROSECUTION ON THE MERITS IS CLOSED. THIS NOTICE OF ALLOWANCE IS NOT A GRANT OF PATENT RIGHTS. THIS APPLICATION IS SUBJECT TO WITHDRAWAL FROM ISSUE AT THE INITIATIVE OF THE OFFICE OR UPON PETITION BY THE APPLICANT. SEE 37 CFR 1.313 AND MPEP 1308.

THE ISSUE FEE AND PUBLICATION FEE (IF REQUIRED) MUST BE PAID WITHIN THREE MONTHS FROM THE MAILING DATE OF THIS NOTICE OR THIS APPLICATION SHALL BE REGARDED AS ABANDONED. THIS STATUTORY PERIOD CANNOT BE EXTENDED. SEE 35 U.S.C. 151. THE ISSUE FEE DUE INDICATED ABOVE DOES NOT REFLECT A CREDIT FOR ANY PREVIOUSLY PAID ISSUE FEE IN THIS APPLICATION. IF AN ISSUE FEE HAS PREVIOUSLY BEEN PAID IN THIS APPLICATION (AS SHOWN ABOVE), THE RETURN OF PART B OF THIS FORM WILL BE CONSIDERED A REQUEST TO REAPPLY THE PREVIOUSLY PAID ISSUE FEE TOWARD THE ISSUE FEE NOW DUE.

HOW TO REPLY TO THIS NOTICE:

I. Review the ENTITY STATUS shown above. If the ENTITY STATUS is shown as SMALL or MICRO, verify whether entitlement to that entity status still applies.

If the ENTITY STATUS is the same as shown above, pay the TOTAL FEE(S) DUE shown above.

If the ENTITY STATUS is changed from that shown above, on PART B - FEE(S) TRANSMITTAL, complete section number 5 titled "Change in Entity Status (from status indicated above)".

For purposes of this notice, small entity fees are 1/2 the amount of undiscounted fees, and micro entity fees are 1/2 the amount of small entity fees.

II. PART B - FEE(S) TRANSMITTAL, or its equivalent, must be completed and returned to the United States Patent and Trademark Office (USPTO) with your ISSUE FEE and PUBLICATION FEE (if required). If you are charging the fee(s) to your deposit account, section "4b" of Part B - Fee(s) Transmittal should be completed and an extra copy of the form should be submitted. If an equivalent of Part B is filed, a request to reapply a previously paid issue fee must be clearly made, and delays in processing may occur due to the difficulty in recognizing the paper as an equivalent of Part B.

III. All communications regarding this application must give the application number. Please direct all communications prior to issuance to Mail Stop ISSUE FEE unless advised to the contrary.

IMPORTANT REMINDER: Maintenance fees are due in utility patents issuing on applications filed on or after Dec. 12, 1980. It is patentee's responsibility to ensure timely payment of maintenance fees when due. More information is available at www.uspto.gov/PatentMaintenanceFees.

PART B - FEE(S) TRANSMITTAL

Complete and send this form, together with applicable fee(s), by mail or fax, or via EFS-Web.

By mail, send to: **Mail Stop ISSUE FEE**
Commissioner for Patents
P.O. Box 1450
Alexandria, Virginia 22313-1450

By fax, send to: **(571)-273-2885**

INSTRUCTIONS: This form should be used for transmitting the ISSUE FEE and PUBLICATION FEE (if required). Blocks 1 through 5 should be completed where appropriate. All further correspondence including the Patent, advance orders and notification of maintenance fees will be mailed to the current correspondence address as indicated unless corrected below or directed otherwise in Block 1, by (a) specifying a new correspondence address; and/or (b) indicating a separate "FEE ADDRESS" for maintenance fee notifications.

CURRENT CORRESPONDENCE ADDRESS (Note: Use Block 1 for any change of address)

78686 7590 06/11/2019
Sandvik Intellectual Property
4730 Consulate Plaza Drive
Suite 190
Houston, TX 77032

Note: A certificate of mailing can only be used for domestic mailings of the Fee(s) Transmittal. This certificate cannot be used for any other accompanying papers. Each additional paper, such as an assignment or formal drawing, must have its own certificate of mailing or transmission.

Certificate of Mailing or Transmission

I hereby certify that this Fee(s) Transmittal is being deposited with the United States Postal Service with sufficient postage for first class mail in an envelope addressed to the Mail Stop ISSUE FEE address above, or being transmitted to the USPTO via EFS-Web or by facsimile to (571) 273-2885, on the date indicated below.

(Typed or printed name)
(Signature)
(Date)

APPLICATION NO.	FILING DATE	FIRST NAMED INVENTOR	ATTORNEY DOCKET NO.	CONFIRMATION NO.
15/035,774	05/11/2016	Axel BERGMAN	SC 14208WOUS	3999

TITLE OF INVENTION: GYRATORY CRUSHER MAIN SHAFT AND ASSEMBLY

APPLN. TYPE	ENTITY STATUS	ISSUE FEE DUE	PUBLICATION FEE DUE	PREV. PAID ISSUE FEE	TOTAL FEE(S) DUE	DATE DUE
nonprovisional	UNDISCOUNTED	$1000	$0	$1000	$1000	09/11/2019

EXAMINER	ART UNIT	CLASS-SUBCLASS
FRANCIS, FAYE	3725	241-209000

1. Change of correspondence address or indication of "Fee Address" (37 CFR 1.363).

☐ Change of correspondence address (or Change of Correspondence Address form PTO/SB/122) attached.

☐ "Fee Address" indication (or "Fee Address" Indication form PTO/SB/47; Rev 03-09 or more recent) attached. **Use of a Customer Number is required.**

2. For printing on the patent front page, list

(1) The names of up to 3 registered patent attorneys or agents OR, alternatively,

(2) The name of a single firm (having as a member a registered attorney or agent) and the names of up to 2 registered patent attorneys or agents. If no name is listed, no name will be printed.

1 _____

2 _____

3 _____

3. ASSIGNEE NAME AND RESIDENCE DATA TO BE PRINTED ON THE PATENT (print or type)

PLEASE NOTE: Unless an assignee is identified below, no assignee data will appear on the patent. If an assignee is identified below, the document must have been previously recorded, or filed for recordation, as set forth in 37 CFR 3.11 and 37 CFR 3.81(a). Completion of this form is NOT a substitute for filing an assignment.

(A) NAME OF ASSIGNEE

(B) RESIDENCE: (CITY and STATE OR COUNTRY)

Please check the appropriate assignee category or categories (will not be printed on the patent) : ☐ Individual ☐ Corporation or other private group entity ☐ Government

4a. Fees submitted: ☐ Issue Fee ☐ Publication Fee (if required) ☐ Advance Order - # of Copies _____

4b. Method of Payment: *(Please first reapply any previously paid fee shown above)*

☐ Electronic Payment via EFS-Web ☐ Enclosed check ☐ Non-electronic payment by credit card (Attach form PTO-2038)

☐ The Director is hereby authorized to charge the required fee(s), any deficiency, or credit any overpayment to Deposit Account No. _____

5. **Change in Entity Status** (from status indicated above)

☐ Applicant certifying micro entity status. See 37 CFR 1.29 — NOTE: Absent a valid certification of Micro Entity Status (see forms PTO/SB/15A and 15B), issue fee payment in the micro entity amount will not be accepted at the risk of application abandonment.

☐ Applicant asserting small entity status. See 37 CFR 1.27 — NOTE: If the application was previously under micro entity status, checking this box will be taken to be a notification of loss of entitlement to micro entity status.

☐ Applicant changing to regular undiscounted fee status. — NOTE: Checking this box will be taken to be a notification of loss of entitlement to small or micro entity status, as applicable.

NOTE: This form must be signed in accordance with 37 CFR 1.31 and 1.33. See 37 CFR 1.4 for signature requirements and certifications.

Authorized Signature _____ Date _____

Typed or printed name _____ Registration No. _____

PTOL-85 Part B (08-18) Approved for use through 01/31/2020 OMB 0651-0033 U.S. Patent and Trademark Office; U.S. DEPARTMENT OF COMMERCE

UNITED STATES PATENT AND TRADEMARK OFFICE

UNITED STATES DEPARTMENT OF COMMERCE
United States Patent and Trademark Office
Address: COMMISSIONER FOR PATENTS
P.O. Box 1450
Alexandria, Virginia 22313-1450
www.uspto.gov

APPLICATION NO.	FILING DATE	FIRST NAMED INVENTOR	ATTORNEY DOCKET NO.	CONFIRMATION NO.
15/035,774	05/11/2016	Axel BERGMAN	SC 14208WOUS	3999

78686 7590 06/11/2019

Sandvik Intellectual Property
4730 Consulate Plaza Drive
Suite 190
Houston, TX 77032

EXAMINER	
FRANCIS, FAYE	

ART UNIT	PAPER NUMBER
3725	

DATE MAILED: 06/11/2019

Determination of Patent Term Adjustment under 35 U.S.C. 154 (b)

(Applications filed on or after May 29, 2000)

The Office has discontinued providing a Patent Term Adjustment (PTA) calculation with the Notice of Allowance.

Section 1(h)(2) of the AIA Technical Corrections Act amended 35 U.S.C. 154(b)(3)(B)(i) to eliminate the requirement that the Office provide a patent term adjustment determination with the notice of allowance. See Revisions to Patent Term Adjustment, 78 Fed. Reg. 19416, 19417 (Apr. 1, 2013). Therefore, the Office is no longer providing an initial patent term adjustment determination with the notice of allowance. The Office will continue to provide a patent term adjustment determination with the Issue Notification Letter that is mailed to applicant approximately three weeks prior to the issue date of the patent, and will include the patent term adjustment on the patent. Any request for reconsideration of the patent term adjustment determination (or reinstatement of patent term adjustment) should follow the process outlined in 37 CFR 1.705.

Any questions regarding the Patent Term Extension or Adjustment determination should be directed to the Office of Patent Legal Administration at (571)-272-7702. Questions relating to issue and publication fee payments should be directed to the Customer Service Center of the Office of Patent Publication at 1-(888)-786-0101 or (571)-272-4200.

OMB Clearance and PRA Burden Statement for PTOL-85 Part B

The Paperwork Reduction Act (PRA) of 1995 requires Federal agencies to obtain Office of Management and Budget approval before requesting most types of information from the public. When OMB approves an agency request to collect information from the public, OMB (i) provides a valid OMB Control Number and expiration date for the agency to display on the instrument that will be used to collect the information and (ii) requires the agency to inform the public about the OMB Control Number's legal significance in accordance with 5 CFR 1320.5(b).

The information collected by PTOL-85 Part B is required by 37 CFR 1.311. The information is required to obtain or retain a benefit by the public which is to file (and by the USPTO to process) an application. Confidentiality is governed by 35 U.S.C. 122 and 37 CFR 1.14. This collection is estimated to take 30 minutes to complete, including gathering, preparing, and submitting the completed application form to the USPTO. Time will vary depending upon the individual case. Any comments on the amount of time you require to complete this form and/or suggestions for reducing this burden, should be sent to the Chief Information Officer, U.S. Patent and Trademark Office, U.S. Department of Commerce, P.O. Box 1450, Alexandria, Virginia 22313-1450. DO NOT SEND FEES OR COMPLETED FORMS TO THIS ADDRESS. SEND TO: Commissioner for Patents, P.O. Box 1450, Alexandria, Virginia 22313-1450. Under the Paperwork Reduction Act of 1995, no persons are required to respond to a collection of information unless it displays a valid OMB control number.

Privacy Act Statement

The Privacy Act of 1974 (P.L. 93-579) requires that you be given certain information in connection with your submission of the attached form related to a patent application or patent. Accordingly, pursuant to the requirements of the Act, please be advised that: (1) the general authority for the collection of this information is 35 U.S.C. 2(b)(2); (2) furnishing of the information solicited is voluntary; and (3) the principal purpose for which the information is used by the U.S. Patent and Trademark Office is to process and/or examine your submission related to a patent application or patent. If you do not furnish the requested information, the U.S. Patent and Trademark Office may not be able to process and/or examine your submission, which may result in termination of proceedings or abandonment of the application or expiration of the patent.

The information provided by you in this form will be subject to the following routine uses:

1. The information on this form will be treated confidentially to the extent allowed under the Freedom of Information Act (5 U.S.C. 552) and the Privacy Act (5 U.S.C 552a). Records from this system of records may be disclosed to the Department of Justice to determine whether disclosure of these records is required by the Freedom of Information Act.
2. A record from this system of records may be disclosed, as a routine use, in the course of presenting evidence to a court, magistrate, or administrative tribunal, including disclosures to opposing counsel in the course of settlement negotiations.
3. A record in this system of records may be disclosed, as a routine use, to a Member of Congress submitting a request involving an individual, to whom the record pertains, when the individual has requested assistance from the Member with respect to the subject matter of the record.
4. A record in this system of records may be disclosed, as a routine use, to a contractor of the Agency having need for the information in order to perform a contract. Recipients of information shall be required to comply with the requirements of the Privacy Act of 1974, as amended, pursuant to 5 U.S.C. 552a(m).
5. A record related to an International Application filed under the Patent Cooperation Treaty in this system of records may be disclosed, as a routine use, to the International Bureau of the World Intellectual Property Organization, pursuant to the Patent Cooperation Treaty.
6. A record in this system of records may be disclosed, as a routine use, to another federal agency for purposes of National Security review (35 U.S.C. 181) and for review pursuant to the Atomic Energy Act (42 U.S.C. 218(c)).
7. A record from this system of records may be disclosed, as a routine use, to the Administrator, General Services, or his/her designee, during an inspection of records conducted by GSA as part of that agency's responsibility to recommend improvements in records management practices and programs, under authority of 44 U.S.C. 2904 and 2906. Such disclosure shall be made in accordance with the GSA regulations governing inspection of records for this purpose, and any other relevant (i.e., GSA or Commerce) directive. Such disclosure shall not be used to make determinations about individuals.
8. A record from this system of records may be disclosed, as a routine use, to the public after either publication of the application pursuant to 35 U.S.C. 122(b) or issuance of a patent pursuant to 35 U.S.C. 151. Further, a record may be disclosed, subject to the limitations of 37 CFR 1.14, as a routine use, to the public if the record was filed in an application which became abandoned or in which the proceedings were terminated and which application is referenced by either a published application, an application open to public inspection or an issued patent.
9. A record from this system of records may be disclosed, as a routine use, to a Federal, State, or local law enforcement agency, if the USPTO becomes aware of a violation or potential violation of law or regulation.

Letter Withdrawing the Notice of Allowance and Fee(s) Due

This application is being withdrawn from issue because an inventor's oath or declaration, executed by or with respect to each inventor, in compliance with 35 U.S.C. § 115 and 37 CFR 1.63 or 1.64 has not been submitted. While the claims remain allowed and prosecution on the merits remains closed, the Notice of Allowance and Fee(s) Due is hereby withdrawn. The Notice of Allowability is not being withdrawn. As a result, any time period set forth in the Notice of Allowability continues to run from the mailing date of the Notice of Allowability.

Oath/Declaration:

An inventor's oath or declaration in compliance with 35 U.S.C. § 115 and 37 CFR 1.63 or 1.64, executed by or with respect to each inventor MUST be filed **no later than the date on which the issue fee is paid.** See 35 U.S.C. 115(f). In this instance, a compliant inventor's oath or declaration must be submitted before, or at the time, the signed part B of the attached "Notice of Allowance and Fee(s) Due" (PTOL-85) is returned (see below). Failure to timely comply will result in ABANDONMENT of this application. To ensure compliance with 35 U.S.C. § 115 and 37 CFR 1.63 or 1.64, the Office suggests using the appropriate USPTO form(s) available on the USPTO Web site (e.g., PTO/AIA/01 for a declaration under 37 CFR 1.63 or PTO/AIA/02 for a substitute statement under 37 CFR 1.64).

An inventor's oath or declaration in compliance with 35 U.S.C. § 115 and 37 CFR 1.63 or 1.64 must include the following (in addition to meeting the other requirements of 35 U.S.C. § 115 and 37 CFR 1.63 or 1.64):

(1) a statement that the application was made or was authorized to be made by the affiant or declarant;

(2) a statement that such individual believes himself or herself to be the original inventor or an original joint inventor of a claimed invention in the application; and

(3) an aoknowledgment that any willful false statement made in such declaration or statement is punishable under section 1001 of title 18 by fine or imprisonment of not more than 5 years, or both.

Reapplication of Issue Fee and Publication Fee:

A new Notice of Allowance and Fee(s) Due is being issued herewith. The issue fee and any required publication fee set forth in the new Notice of Allowance and Fee(s) Due, including any fee adjustment since the fees were previously paid, must be paid within three months from the mailing date of the new Notice of Allowance and Fee(s) Due. Since fees were previously paid, applicant may request that the previously submitted issue fee and publication fee be applied toward payment of the issue fee and publication fee in the amount identified on the new Notice of Allowance and Fee(s) Due. The return of part B of the new Notice of Allowance and Fee(s) Due will be considered a request to apply any previously submitted issue fee and publication fee toward the issue fee and any publication fee now due. Failure to timely comply will result in ABANDONMENT of this application. **This three-month time period is not extendable under 37 CFR 1.136(a).**

Diane Terry
Application Assistance Unit
571-272-4200

PART B - FEE(S) TRANSMITTAL

Complete and send this form, together with applicable fee(s), by mail or fax, or via EFS-Web.

By mail, send to: **Mail Stop ISSUE FEE**
Commissioner for Patents
P.O. Box 1450
Alexandria, Virginia 22313-1450

By fax, send to: **(571)-273-2885**

INSTRUCTIONS: This form should be used for transmitting the ISSUE FEE and PUBLICATION FEE (if required). Blocks 1 through 5 should be completed where appropriate. All further correspondence including the Patent, advance orders and notification of maintenance fees will be mailed to the current correspondence address as indicated unless corrected below or directed otherwise in Block 1, by (a) specifying a new correspondence address; and/or (b) indicating a separate "FEE ADDRESS" for maintenance fee notifications.

CURRENT CORRESPONDENCE ADDRESS (Note: Use Block 1 for any change of address)

78686 7590 06/11/2019
Sandvik Intellectual Property
4730 Consulate Plaza Drive
Suite 190
Houston, TX 77032

Note: A certificate of mailing can only be used for domestic mailings of the Fee(s) Transmittal. This certificate cannot be used for any other accompanying papers. Each additional paper, such as an assignment or formal drawing, must have its own certificate of mailing or transmission.

Certificate of Mailing or Transmission

I hereby certify that this Fee(s) Transmittal is being deposited with the United States Postal Service with sufficient postage for first class mail in an envelope addressed to the Mail Stop ISSUE FEE address above, or being transmitted to the USPTO via EFS-Web or by facsimile to (571) 273-2885, on the date indicated below.

(Typed or printed name)
(Signature)
(Date)

APPLICATION NO.	FILING DATE	FIRST NAMED INVENTOR	ATTORNEY DOCKET NO.	CONFIRMATION NO.
15/035,774	05/11/2016	Axel BERGMAN	SC 14208WOUS	3999

TITLE OF INVENTION: GYRATORY CRUSHER MAIN SHAFT AND ASSEMBLY

APPLN. TYPE	ENTITY STATUS	ISSUE FEE DUE	PUBLICATION FEE DUE	PREV. PAID ISSUE FEE	TOTAL FEE(S) DUE	DATE DUE
nonprovisional	UNDISCOUNTED	$1000	$0	$1000	$1000	09/11/2019

EXAMINER	ART UNIT	CLASS-SUBCLASS
FRANCIS, FAYE	3725	241-209000

1. Change of correspondence address or indication of "Fee Address" (37 CFR 1.363).

☐ Change of correspondence address (or Change of Correspondence Address form PTO/SB/122) attached.

☐ "Fee Address" indication (or "Fee Address" Indication form PTO/SB/47; Rev 03-09 or more recent) attached. **Use of a Customer Number is required.**

2. For printing on the patent front page, list

(1) The names of up to 3 registered patent attorneys or agents OR, alternatively,

(2) The name of a single firm (having as a member a registered attorney or agent) and the names of up to 2 registered patent attorneys or agents. If no name is listed, no name will be printed.

1 Corinne R. Gorski
2
3

3. ASSIGNEE NAME AND RESIDENCE DATA TO BE PRINTED ON THE PATENT (print or type)

PLEASE NOTE: Unless an assignee is identified below, no assignee data will appear on the patent. If an assignee is identified below, the document must have been previously recorded, or filed for recordation, as set forth in 37 CFR 3.11 and 37 CFR 3.81(a). Completion of this form is NOT a substitute for filing an assignment.

(A) NAME OF ASSIGNEE: SANDVIK INTELLECTUAL PROPERTY AB

(B) RESIDENCE: (CITY and STATE OR COUNTRY): Sandviken, SE

Please check the appropriate assignee category or categories (will not be printed on the patent) : ☐ Individual ☒ Corporation or other private group entity ☐ Government

4a. Fees submitted: ☒ Issue Fee ☐ Publication Fee (if required) ☐ Advance Order - # of Copies _____

4b. Method of Payment: *(Please first reapply any previously paid fee shown above)*

☒ Electronic Payment via EFS-Web ☐ Enclosed check ☐ Non-electronic payment by credit card (Attach form PTO-2038)

☒ The Director is hereby authorized to charge the required fee(s), any deficiency, or credit any overpayment to Deposit Account No. 505792

5. **Change in Entity Status** (from status indicated above)

☐ Applicant certifying micro entity status. See 37 CFR 1.29 — NOTE: Absent a valid certification of Micro Entity Status (see forms PTO/SB/15A and 15B), issue fee payment in the micro entity amount will not be accepted at the risk of application abandonment.

☐ Applicant asserting small entity status. See 37 CFR 1.27 — NOTE: If the application was previously under micro entity status, checking this box will be taken to be a notification of loss of entitlement to micro entity status.

☐ Applicant changing to regular undiscounted fee status. — NOTE: Checking this box will be taken to be a notification of loss of entitlement to small or micro entity status, as applicable.

NOTE: This form must be signed in accordance with 37 CFR 1.31 and 1.33. See 37 CFR 1.4 for signature requirements and certifications.

Authorized Signature /Corinne R. Gorski/ Date September 11, 2019

Typed or printed name Corinne R. Gorski Registration No. 34339

PTOL-85 Part B (08-18) Approved for use through 01/31/2020 OMB 0651-0033 U.S. Patent and Trademark Office; U.S. DEPARTMENT OF COMMERCE

PTO/AIA/01 (06-12)
Approved for use through 01/31/2014. OMB 0651-0032
U.S. Patent and Trademark Office, U.S. DEPARTMENT OF COMMERCE
Under the Paperwork Reduction Act of 1995, no persons are required to respond to a collection of information unless it displays a valid OMB control number.

DECLARATION (37 CFR 1.63) FOR UTILITY OR DESIGN APPLICATION USING AN APPLICATION DATA SHEET (37 CFR 1.76)

Title of Invention	GYRATORY CRUSHER MAIN SHAFT AND ASSEMBLY

As the below named inventor, I hereby declare that:

This declaration is directed to:

- [x] The attached application, or
- [ ] United States application or PCT international application number _____

filed on _____.

The above-identified application was made or authorized to be made by me.

I believe that I am the original inventor or an original joint inventor of a claimed invention in the application.

I hereby acknowledge that any willful false statement made in this declaration is punishable under 18 U.S.C. 1001 by fine or imprisonment of not more than five (5) years, or both.

WARNING:

Petitioner/applicant is cautioned to avoid submitting personal information in documents filed in a patent application that may contribute to identity theft. Personal information such as social security numbers, bank account numbers, or credit card numbers (other than a check or credit card authorization form PTO-2038 submitted for payment purposes) is never required by the USPTO to support a petition or an application. If this type of personal information is included in documents submitted to the USPTO, petitioners/applicants should consider redacting such personal information from the documents before submitting them to the USPTO. Petitioner/applicant is advised that the record of a patent application is available to the public after publication of the application (unless a non-publication request in compliance with 37 CFR 1.213(a) is made in the application) or issuance of a patent. Furthermore, the record from an abandoned application may also be available to the public if the application is referenced in a published application or an issued patent (see 37 CFR 1.14). Checks and credit card authorization forms PTO-2038 submitted for payment purposes are not retained in the application file and therefore are not publicly available.

LEGAL NAME OF INVENTOR

Inventor: BERGMAN, Axel Date (Optional): 2016 08 05

Signature: _____

Note: An application data sheet (PTO/AIA/14 or equivalent), including naming the entire inventive entity, must accompany this form. Use an additional PTO/SB/AIA01 form for each additional inventor.

This collection of information is required by 35 U.S.C. 115 and 37 CFR 1.63. The information is required to obtain or retain a benefit by the public which is to file (and by the USPTO to process) an application. Confidentiality is governed by 35 U.S.C. 122 and 37 CFR 1.11 and 1.14. This collection is estimated to take 1 minute to complete, including gathering, preparing, and submitting the completed application form to the USPTO. Time will vary depending upon the individual case. Any comments on the amount of time you require to complete this form and/or suggestions for reducing this burden, should be sent to the Chief Information Officer, U.S. Patent and Trademark Office, U.S. Department of Commerce, P.O. Box 1450, Alexandria, VA 22313-1450. DO NOT SEND FEES OR COMPLETED FORMS TO THIS ADDRESS. **SEND TO: Commissioner for Patents, P.O. Box 1450, Alexandria, VA 22313-1450.**

If you need assistance in completing the form, call 1-800-PTO-9199 and select option 2.

Privacy Act Statement

The **Privacy Act of 1974 (P.L. 93-579)** requires that you be given certain information in connection with your submission of the attached form related to a patent application or patent. Accordingly, pursuant to the requirements of the Act, please be advised that: (1) the general authority for the collection of this information is 35 U.S.C. 2(b)(2); (2) furnishing of the information solicited is voluntary; and (3) the principal purpose for which the information is used by the U.S. Patent and Trademark Office is to process and/or examine your submission related to a patent application or patent. If you do not furnish the requested information, the U.S. Patent and Trademark Office may not be able to process and/or examine your submission, which may result in termination of proceedings or abandonment of the application or expiration of the patent.

The information provided by you in this form will be subject to the following routine uses:

1. The information on this form will be treated confidentially to the extent allowed under the Freedom of Information Act (5 U.S.C. 552) and the Privacy Act (5 U.S.C 552a). Records from this system of records may be disclosed to the Department of Justice to determine whether disclosure of these records is required by the Freedom of Information Act.
2. A record from this system of records may be disclosed, as a routine use, in the course of presenting evidence to a court, magistrate, or administrative tribunal, including disclosures to opposing counsel in the course of settlement negotiations.
3. A record in this system of records may be disclosed, as a routine use, to a Member of Congress submitting a request involving an individual, to whom the record pertains, when the individual has requested assistance from the Member with respect to the subject matter of the record.
4. A record in this system of records may be disclosed, as a routine use, to a contractor of the Agency having need for the information in order to perform a contract. Recipients of information shall be required to comply with the requirements of the Privacy Act of 1974, as amended, pursuant to 5 U.S.C. 552a(m).
5. A record related to an International Application filed under the Patent Cooperation Treaty in this system of records may be disclosed, as a routine use, to the International Bureau of the World Intellectual Property Organization, pursuant to the Patent Cooperation Treaty.
6. A record in this system of records may be disclosed, as a routine use, to another federal agency for purposes of National Security review (35 U.S.C. 181) and for review pursuant to the Atomic Energy Act (42 U.S.C. 218(c)).
7. A record from this system of records may be disclosed, as a routine use, to the Administrator, General Services, or his/her designee, during an inspection of records conducted by GSA as part of that agency's responsibility to recommend improvements in records management practices and programs, under authority of 44 U.S.C. 2904 and 2906. Such disclosure shall be made in accordance with the GSA regulations governing inspection of records for this purpose, and any other relevant (*i.e.*, GSA or Commerce) directive. Such disclosure shall not be used to make determinations about individuals.
8. A record from this system of records may be disclosed, as a routine use, to the public after either publication of the application pursuant to 35 U.S.C. 122(b) or issuance of a patent pursuant to 35 U.S.C. 151. Further, a record may be disclosed, subject to the limitations of 37 CFR 1.14, as a routine use, to the public if the record was filed in an application which became abandoned or in which the proceedings were terminated and which application is referenced by either a published application, an application open to public inspection or an issued patent.
9. A record from this system of records may be disclosed, as a routine use, to a Federal, State, or local law enforcement agency, if the USPTO becomes aware of a violation or potential violation of law or regulation.

PTO/AIA/01 (06-12)
Approved for use through 01/31/2014. OMB 0651-0032
U.S. Patent and Trademark Office, U.S. DEPARTMENT OF COMMERCE
Under the Paperwork Reduction Act of 1995, no persons are required to respond to a collection of information unless it displays a valid OMB control number.

DECLARATION (37 CFR 1.63) FOR UTILITY OR DESIGN APPLICATION USING AN APPLICATION DATA SHEET (37 CFR 1.76)

Title of Invention	GYRATORY CRUSHER MAIN SHAFT AND ASSEMBLY

As the below named inventor, I hereby declare that:

This declaration is directed to:

- [x] The attached application, or
- [ ] United States application or PCT international application number _____

filed on _____.

The above-identified application was made or authorized to be made by me.

I believe that I am the original inventor or an original joint inventor of a claimed invention in the application.

I hereby acknowledge that any willful false statement made in this declaration is punishable under 18 U.S.C. 1001 by fine or imprisonment of not more than five (5) years, or both.

WARNING:

Petitioner/applicant is cautioned to avoid submitting personal information in documents filed in a patent application that may contribute to identity theft. Personal information such as social security numbers, bank account numbers, or credit card numbers (other than a check or credit card authorization form PTO-2038 submitted for payment purposes) is never required by the USPTO to support a petition or an application. If this type of personal information is included in documents submitted to the USPTO, petitioners/applicants should consider redacting such personal information from the documents before submitting them to the USPTO. Petitioner/applicant is advised that the record of a patent application is available to the public after publication of the application (unless a non-publication request in compliance with 37 CFR 1.213(a) is made in the application) or issuance of a patent. Furthermore, the record from an abandoned application may also be available to the public if the application is referenced in a published application or an issued patent (see 37 CFR 1.14). Checks and credit card authorization forms PTO-2038 submitted for payment purposes are not retained in the application file and therefore are not publicly available.

LEGAL NAME OF INVENTOR

Inventor: ERIKSSON, Fredrik Date (Optional): _____

Signature: _____

Note: An application data sheet (PTO/AIA/14 or equivalent), including naming the entire inventive entity, must accompany this form. Use an additional PTO/SB/AIA01 form for each additional inventor.

This collection of information is required by 35 U.S.C. 115 and 37 CFR 1.63. The information is required to obtain or retain a benefit by the public which is to file (and by the USPTO to process) an application. Confidentiality is governed by 35 U.S.C. 122 and 37 CFR 1.11 and 1.14. This collection is estimated to take 1 minute to complete, including gathering, preparing, and submitting the completed application form to the USPTO. Time will vary depending upon the individual case. Any comments on the amount of time you require to complete this form and/or suggestions for reducing this burden, should be sent to the Chief Information Officer, U.S. Patent and Trademark Office, U.S. Department of Commerce, P.O. Box 1450, Alexandria, VA 22313-1450. DO NOT SEND FEES OR COMPLETED FORMS TO THIS ADDRESS. **SEND TO: Commissioner for Patents, P.O. Box 1450, Alexandria, VA 22313-1450.**

If you need assistance in completing the form, call 1-800-PTO-9199 and select option 2.

Privacy Act Statement

The **Privacy Act of 1974 (P.L. 93-579)** requires that you be given certain information in connection with your submission of the attached form related to a patent application or patent. Accordingly, pursuant to the requirements of the Act, please be advised that: (1) the general authority for the collection of this information is 35 U.S.C. 2(b)(2); (2) furnishing of the information solicited is voluntary; and (3) the principal purpose for which the information is used by the U.S. Patent and Trademark Office is to process and/or examine your submission related to a patent application or patent. If you do not furnish the requested information, the U.S. Patent and Trademark Office may not be able to process and/or examine your submission, which may result in termination of proceedings or abandonment of the application or expiration of the patent.

The information provided by you in this form will be subject to the following routine uses:

1. The information on this form will be treated confidentially to the extent allowed under the Freedom of Information Act (5 U.S.C. 552) and the Privacy Act (5 U.S.C 552a). Records from this system of records may be disclosed to the Department of Justice to determine whether disclosure of these records is required by the Freedom of Information Act.
2. A record from this system of records may be disclosed, as a routine use, in the course of presenting evidence to a court, magistrate, or administrative tribunal, including disclosures to opposing counsel in the course of settlement negotiations.
3. A record in this system of records may be disclosed, as a routine use, to a Member of Congress submitting a request involving an individual, to whom the record pertains, when the individual has requested assistance from the Member with respect to the subject matter of the record.
4. A record in this system of records may be disclosed, as a routine use, to a contractor of the Agency having need for the information in order to perform a contract. Recipients of information shall be required to comply with the requirements of the Privacy Act of 1974, as amended, pursuant to 5 U.S.C. 552a(m).
5. A record related to an International Application filed under the Patent Cooperation Treaty in this system of records may be disclosed, as a routine use, to the International Bureau of the World Intellectual Property Organization, pursuant to the Patent Cooperation Treaty.
6. A record in this system of records may be disclosed, as a routine use, to another federal agency for purposes of National Security review (35 U.S.C. 181) and for review pursuant to the Atomic Energy Act (42 U.S.C. 218(c)).
7. A record from this system of records may be disclosed, as a routine use, to the Administrator, General Services, or his/her designee, during an inspection of records conducted by GSA as part of that agency's responsibility to recommend improvements in records management practices and programs, under authority of 44 U.S.C. 2904 and 2906. Such disclosure shall be made in accordance with the GSA regulations governing inspection of records for this purpose, and any other relevant (*i.e.*, GSA or Commerce) directive. Such disclosure shall not be used to make determinations about individuals.
8. A record from this system of records may be disclosed, as a routine use, to the public after either publication of the application pursuant to 35 U.S.C. 122(b) or issuance of a patent pursuant to 35 U.S.C. 151. Further, a record may be disclosed, subject to the limitations of 37 CFR 1.14, as a routine use, to the public if the record was filed in an application which became abandoned or in which the proceedings were terminated and which application is referenced by either a published application, an application open to public inspection or an issued patent.
9. A record from this system of records may be disclosed, as a routine use, to a Federal, State, or local law enforcement agency, if the USPTO becomes aware of a violation or potential violation of law or regulation.

PTO/AIA/01 (06-12)
Approved for use through 01/31/2014. OMB 0651-0032
U.S. Patent and Trademark Office; U.S. DEPARTMENT OF COMMERCE
Under the Paperwork Reduction Act of 1995, no persons are required to respond to a collection of information unless it displays a valid OMB control number.

DECLARATION (37 CFR 1.63) FOR UTILITY OR DESIGN APPLICATION USING AN APPLICATION DATA SHEET (37 CFR 1.76)

Title of Invention	GYRATORY CRUSHER MAIN SHAFT AND ASSEMBLY

As the below named inventor, I hereby declare that:

This declaration is directed to:

- [x] The attached application, or
- [ ] United States application or PCT international application number _____ filed on _____.

The above-identified application was made or authorized to be made by me.

I believe that I am the original inventor or an original joint inventor of a claimed invention in the application.

I hereby acknowledge that any willful false statement made in this declaration is punishable under 18 U.S.C. 1001 by fine or imprisonment of not more than five (5) years, or both.

WARNING:

Petitioner/applicant is cautioned to avoid submitting personal information in documents filed in a patent application that may contribute to identity theft. Personal information such as social security numbers, bank account numbers, or credit card numbers (other than a check or credit card authorization form PTO-2036 submitted for payment purposes) is never required by the USPTO to support a petition or an application. If this type of personal information is included in documents submitted to the USPTO, petitioners/applicants should consider redacting such personal information from the documents before submitting them to the USPTO. Petitioner/applicant is advised that the record of a patent application is available to the public after publication of the application (unless a non-publication request in compliance with 37 CFR 1.213(a) is made in the application) or issuance of a patent. Furthermore, the record from an abandoned application may also be available to the public if the application is referenced in a published application or an issued patent (see 37 CFR 1.14). Checks and credit card authorization forms PTO-2038 submitted for payment purposes are not retained in the application file and therefore are not publicly available.

LEGAL NAME OF INVENTOR

Inventor: ERIKSSON, Bengt-Arne Date (Optional) 2016-05-12

Signature: Bengt-Arne Eriksson

Note: An application data sheet (PTO/AIA/14 or equivalent), including naming the entire inventive entity, must accompany this form. Use an additional PTO/SB/AIA01 form for each additional inventor.

This collection of information is required by 35 U.S.C. 115 and 37 CFR 1.63. The information is required to obtain or retain a benefit by the public which is to file (and by the USPTO to process) an application. Confidentiality is governed by 35 U.S.C. 122 and 37 CFR 1.11 and 1.14. This collection is estimated to take 1 minute to complete, including gathering, preparing, and submitting the completed application form to the USPTO. Time will vary depending upon the individual case. Any comments on the amount of time you require to complete this form and/or suggestions for reducing this burden, should be sent to the Chief Information Officer, U.S. Patent and Trademark Office, U.S. Department of Commerce, P.O. Box 1450, Alexandria, VA 22313-1450. DO NOT SEND FEES OR COMPLETED FORMS TO THIS ADDRESS. **SEND TO: Commissioner for Patents, P.O. Box 1450, Alexandria, VA 22313-1450.**

If you need assistance in completing the form, call 1-800-PTO-9199 and select option 2.

Privacy Act Statement

The **Privacy Act of 1974 (P.L. 93-579)** requires that you be given certain information in connection with your submission of the attached form related to a patent application or patent. Accordingly, pursuant to the requirements of the Act, please be advised that: (1) the general authority for the collection of this information is 35 U.S.C. 2(b)(2); (2) furnishing of the information solicited is voluntary; and (3) the principal purpose for which the information is used by the U.S. Patent and Trademark Office is to process and/or examine your submission related to a patent application or patent. If you do not furnish the requested information, the U.S. Patent and Trademark Office may not be able to process and/or examine your submission, which may result in termination of proceedings or abandonment of the application or expiration of the patent.

The information provided by you in this form will be subject to the following routine uses:

1. The information on this form will be treated confidentially to the extent allowed under the Freedom of Information Act (5 U.S.C. 552) and the Privacy Act (5 U.S.C 552a). Records from this system of records may be disclosed to the Department of Justice to determine whether disclosure of these records is required by the Freedom of Information Act.
2. A record from this system of records may be disclosed, as a routine use, in the course of presenting evidence to a court, magistrate, or administrative tribunal, including disclosures to opposing counsel in the course of settlement negotiations.
3. A record in this system of records may be disclosed, as a routine use, to a Member of Congress submitting a request involving an individual, to whom the record pertains, when the individual has requested assistance from the Member with respect to the subject matter of the record.
4. A record in this system of records may be disclosed, as a routine use, to a contractor of the Agency having need for the information in order to perform a contract. Recipients of information shall be required to comply with the requirements of the Privacy Act of 1974, as amended, pursuant to 5 U.S.C. 552a(m).
5. A record related to an International Application filed under the Patent Cooperation Treaty in this system of records may be disclosed, as a routine use, to the International Bureau of the World Intellectual Property Organization, pursuant to the Patent Cooperation Treaty.
6. A record in this system of records may be disclosed, as a routine use, to another federal agency for purposes of National Security review (35 U.S.C. 181) and for review pursuant to the Atomic Energy Act (42 U.S.C. 218(c)).
7. A record from this system of records may be disclosed, as a routine use, to the Administrator, General Services, or his/her designee, during an inspection of records conducted by GSA as part of that agency's responsibility to recommend improvements in records management practices and programs, under authority of 44 U.S.C. 2904 and 2906. Such disclosure shall be made in accordance with the GSA regulations governing inspection of records for this purpose, and any other relevant (*i.e.*, GSA or Commerce) directive. Such disclosure shall not be used to make determinations about individuals.
8. A record from this system of records may be disclosed, as a routine use, to the public after either publication of the application pursuant to 35 U.S.C. 122(b) or issuance of a patent pursuant to 35 U.S.C. 151. Further, a record may be disclosed, subject to the limitations of 37 CFR 1.14, as a routine use, to the public if the record was filed in an application which became abandoned or in which the proceedings were terminated and which application is referenced by either a published application, an application open to public inspection or an issued patent.
9. A record from this system of records may be disclosed, as a routine use, to a Federal, State, or local law enforcement agency, if the USPTO becomes aware of a violation or potential violation of law or regulation.

PTO/AIA/01 (06-12)
Approved for use through 01/31/2014. OMB 0651-0032
U.S. Patent and Trademark Office, U.S. DEPARTMENT OF COMMERCE
Under the Paperwork Reduction Act of 1995, no persons are required to respond to a collection of information unless it displays a valid OMB control number.

DECLARATION (37 CFR 1.63) FOR UTILITY OR DESIGN APPLICATION USING AN APPLICATION DATA SHEET (37 CFR 1.76)

Title of Invention	GYRATORY CRUSHER MAIN SHAFT AND ASSEMBLY

As the below named inventor, I hereby declare that:

This declaration is directed to:

- [x] The attached application, or
- [ ] United States application or PCT international application number _____ filed on _____.

The above-identified application was made or authorized to be made by me.

I believe that I am the original inventor or an original joint inventor of a claimed invention in the application.

I hereby acknowledge that any willful false statement made in this declaration is punishable under 18 U.S.C. 1001 by fine or imprisonment of not more than five (5) years, or both.

WARNING:

Petitioner/applicant is cautioned to avoid submitting personal information in documents filed in a patent application that may contribute to identity theft. Personal information such as social security numbers, bank account numbers, or credit card numbers (other than a check or credit card authorization form PTO-2038 submitted for payment purposes) is never required by the USPTO to support a petition or an application. If this type of personal information is included in documents submitted to the USPTO, petitioners/applicants should consider redacting such personal information from the documents before submitting them to the USPTO. Petitioner/applicant is advised that the record of a patent application is available to the public after publication of the application (unless a non-publication request in compliance with 37 CFR 1.213(a) is made in the application) or issuance of a patent. Furthermore, the record from an abandoned application may also be available to the public if the application is referenced in a published application or an issued patent (see 37 CFR 1.14). Checks and credit card authorization forms PTO-2038 submitted for payment purposes are not retained in the application file and therefore are not publicly available.

LEGAL NAME OF INVENTOR

Inventor: HALLBERG, Anders Date (Optional): 03-05-2016

Signature: _____

Note: An application data sheet (PTO/AIA/14 or equivalent), including naming the entire inventive entity, must accompany this form. Use an additional PTO/SB/AIA01 form for each additional inventor.

This collection of information is required by 35 U.S.C. 115 and 37 CFR 1.63. The information is required to obtain or retain a benefit by the public which is to file (and by the USPTO to process) an application. Confidentiality is governed by 35 U.S.C. 122 and 37 CFR 1.11 and 1.14. This collection is estimated to take 1 minute to complete, including gathering, preparing, and submitting the completed application form to the USPTO. Time will vary depending upon the individual case. Any comments on the amount of time you require to complete this form and/or suggestions for reducing this burden, should be sent to the Chief Information Officer, U.S. Patent and Trademark Office, U.S. Department of Commerce, P.O. Box 1450, Alexandria, VA 22313-1450. DO NOT SEND FEES OR COMPLETED FORMS TO THIS ADDRESS. **SEND TO: Commissioner for Patents, P.O. Box 1450, Alexandria, VA 22313-1450.**

If you need assistance in completing the form, call 1-800-PTO-9199 and select option 2.

Privacy Act Statement

The **Privacy Act of 1974 (P.L. 93-579)** requires that you be given certain information in connection with your submission of the attached form related to a patent application or patent. Accordingly, pursuant to the requirements of the Act, please be advised that: (1) the general authority for the collection of this information is 35 U.S.C. 2(b)(2); (2) furnishing of the information solicited is voluntary; and (3) the principal purpose for which the information is used by the U.S. Patent and Trademark Office is to process and/or examine your submission related to a patent application or patent. If you do not furnish the requested information, the U.S. Patent and Trademark Office may not be able to process and/or examine your submission, which may result in termination of proceedings or abandonment of the application or expiration of the patent.

The information provided by you in this form will be subject to the following routine uses:

1. The information on this form will be treated confidentially to the extent allowed under the Freedom of Information Act (5 U.S.C. 552) and the Privacy Act (5 U.S.C 552a). Records from this system of records may be disclosed to the Department of Justice to determine whether disclosure of these records is required by the Freedom of Information Act.
2. A record from this system of records may be disclosed, as a routine use, in the course of presenting evidence to a court, magistrate, or administrative tribunal, including disclosures to opposing counsel in the course of settlement negotiations.
3. A record in this system of records may be disclosed, as a routine use, to a Member of Congress submitting a request involving an individual, to whom the record pertains, when the individual has requested assistance from the Member with respect to the subject matter of the record.
4. A record in this system of records may be disclosed, as a routine use, to a contractor of the Agency having need for the information in order to perform a contract. Recipients of information shall be required to comply with the requirements of the Privacy Act of 1974, as amended, pursuant to 5 U.S.C. 552a(m).
5. A record related to an International Application filed under the Patent Cooperation Treaty in this system of records may be disclosed, as a routine use, to the International Bureau of the World Intellectual Property Organization, pursuant to the Patent Cooperation Treaty.
6. A record in this system of records may be disclosed, as a routine use, to another federal agency for purposes of National Security review (35 U.S.C. 181) and for review pursuant to the Atomic Energy Act (42 U.S.C. 218(c)).
7. A record from this system of records may be disclosed, as a routine use, to the Administrator, General Services, or his/her designee, during an inspection of records conducted by GSA as part of that agency's responsibility to recommend improvements in records management practices and programs, under authority of 44 U.S.C. 2904 and 2906. Such disclosure shall be made in accordance with the GSA regulations governing inspection of records for this purpose, and any other relevant (*i.e.*, GSA or Commerce) directive. Such disclosure shall not be used to make determinations about individuals.
8. A record from this system of records may be disclosed, as a routine use, to the public after either publication of the application pursuant to 35 U.S.C. 122(b) or issuance of a patent pursuant to 35 U.S.C. 151. Further, a record may be disclosed, subject to the limitations of 37 CFR 1.14, as a routine use, to the public if the record was filed in an application which became abandoned or in which the proceedings were terminated and which application is referenced by either a published application, an application open to public inspection or an issued patent.
9. A record from this system of records may be disclosed, as a routine use, to a Federal, State, or local law enforcement agency, if the USPTO becomes aware of a violation or potential violation of law or regulation.

PTO/AIA/01 (06-12)
Approved for use through 01/31/2014. OMB 0651-0032
U.S. Patent and Trademark Office; U.S. DEPARTMENT OF COMMERCE
Under the Paperwork Reduction Act of 1995, no persons are required to respond to a collection of information unless it displays a valid OMB control number.

DECLARATION (37 CFR 1.63) FOR UTILITY OR DESIGN APPLICATION USING AN APPLICATION DATA SHEET (37 CFR 1.76)

Title of Invention	GYRATORY CRUSHER MAIN SHAFT AND ASSEMBLY

As the below named inventor, I hereby declare that:

This declaration is directed to:

- [x] The attached application, or
- [ ] United States application or PCT international application number _____ filed on _____.

The above-identified application was made or authorized to be made by me.

I believe that I am the original inventor or an original joint inventor of a claimed invention in the application.

I hereby acknowledge that any willful false statement made in this declaration is punishable under 18 U.S.C. 1001 by fine or imprisonment of not more than five (5) years, or both.

WARNING:

Petitioner/applicant is cautioned to avoid submitting personal information in documents filed in a patent application that may contribute to identity theft. Personal information such as social security numbers, bank account numbers, or credit card numbers (other than a check or credit card authorization form PTO-2038 submitted for payment purposes) is never required by the USPTO to support a petition or an application. If this type of personal information is included in documents submitted to the USPTO, petitioners/applicants should consider redacting such personal information from the documents before submitting them to the USPTO. Petitioner/applicant is advised that the record of a patent application is available to the public after publication of the application (unless a non-publication request in compliance with 37 CFR 1.213(a) is made in the application) or issuance of a patent. Furthermore, the record from an abandoned application may also be available to the public if the application is referenced in a published application or an issued patent (see 37 CFR 1.14). Checks and credit card authorization forms PTO-2038 submitted for payment purposes are not retained in the application file and therefore are not publicly available.

LEGAL NAME OF INVENTOR

Inventor: HOLMBERG, Anne Date (Optional): 2016-05-16

Signature: Anne Holmberg

Note: An application data sheet (PTO/AIA/14 or equivalent), including naming the entire inventive entity, must accompany this form. Use an additional PTO/SB/AIA01 form for each additional inventor.

This collection of information is required by 35 U.S.C. 115 and 37 CFR 1.63. The information is required to obtain or retain a benefit by the public which is to file (and by the USPTO to process) an application. Confidentiality is governed by 35 U.S.C. 122 and 37 CFR 1.11 and 1.14. This collection is estimated to take 1 minute to complete, including gathering, preparing, and submitting the completed application form to the USPTO. Time will vary depending upon the individual case. Any comments on the amount of time you require to complete this form and/or suggestions for reducing this burden, should be sent to the Chief Information Officer, U.S. Patent and Trademark Office, U.S. Department of Commerce, P.O. Box 1450, Alexandria, VA 22313-1450. DO NOT SEND FEES OR COMPLETED FORMS TO THIS ADDRESS. **SEND TO: Commissioner for Patents, P.O. Box 1450, Alexandria, VA 22313-1450.**

If you need assistance in completing the form, call 1-800-PTO-9199 and select option 2.

Privacy Act Statement

The **Privacy Act of 1974 (P.L. 93-579)** requires that you be given certain information in connection with your submission of the attached form related to a patent application or patent. Accordingly, pursuant to the requirements of the Act, please be advised that: (1) the general authority for the collection of this information is 35 U.S.C. 2(b)(2); (2) furnishing of the information solicited is voluntary; and (3) the principal purpose for which the information is used by the U.S. Patent and Trademark Office is to process and/or examine your submission related to a patent application or patent. If you do not furnish the requested information, the U.S. Patent and Trademark Office may not be able to process and/or examine your submission, which may result in termination of proceedings or abandonment of the application or expiration of the patent.

The information provided by you in this form will be subject to the following routine uses:

1. The information on this form will be treated confidentially to the extent allowed under the Freedom of Information Act (5 U.S.C. 552) and the Privacy Act (5 U.S.C 552a). Records from this system of records may be disclosed to the Department of Justice to determine whether disclosure of these records is required by the Freedom of Information Act.
2. A record from this system of records may be disclosed, as a routine use, in the course of presenting evidence to a court, magistrate, or administrative tribunal, including disclosures to opposing counsel in the course of settlement negotiations.
3. A record in this system of records may be disclosed, as a routine use, to a Member of Congress submitting a request involving an individual, to whom the record pertains, when the individual has requested assistance from the Member with respect to the subject matter of the record.
4. A record in this system of records may be disclosed, as a routine use, to a contractor of the Agency having need for the information in order to perform a contract. Recipients of information shall be required to comply with the requirements of the Privacy Act of 1974, as amended, pursuant to 5 U.S.C. 552a(m).
5. A record related to an International Application filed under the Patent Cooperation Treaty in this system of records may be disclosed, as a routine use, to the International Bureau of the World Intellectual Property Organization, pursuant to the Patent Cooperation Treaty.
6. A record in this system of records may be disclosed, as a routine use, to another federal agency for purposes of National Security review (35 U.S.C. 181) and for review pursuant to the Atomic Energy Act (42 U.S.C. 218(c)).
7. A record from this system of records may be disclosed, as a routine use, to the Administrator, General Services, or his/her designee, during an inspection of records conducted by GSA as part of that agency's responsibility to recommend improvements in records management practices and programs, under authority of 44 U.S.C. 2904 and 2906. Such disclosure shall be made in accordance with the GSA regulations governing inspection of records for this purpose, and any other relevant (*i.e.*, GSA or Commerce) directive. Such disclosure shall not be used to make determinations about individuals.
8. A record from this system of records may be disclosed, as a routine use, to the public after either publication of the application pursuant to 35 U.S.C. 122(b) or issuance of a patent pursuant to 35 U.S.C. 151. Further, a record may be disclosed, subject to the limitations of 37 CFR 1.14, as a routine use, to the public if the record was filed in an application which became abandoned or in which the proceedings were terminated and which application is referenced by either a published application, an application open to public inspection or an issued patent.
9. A record from this system of records may be disclosed, as a routine use, to a Federal, State, or local law enforcement agency, if the USPTO becomes aware of a violation or potential violation of law or regulation.

PTO/AIA/01 (06-12)
Approved for use through 01/31/2014. OMB 0651-0032
U.S. Patent and Trademark Office; U.S. DEPARTMENT OF COMMERCE
Under the Paperwork Reduction Act of 1995, no persons are required to respond to a collection of information unless it displays a valid OMB control number.

DECLARATION (37 CFR 1.63) FOR UTILITY OR DESIGN APPLICATION USING AN APPLICATION DATA SHEET (37 CFR 1.76)

Title of Invention	GYRATORY CRUSHER MAIN SHAFT AND ASSEMBLY

As the below named inventor, I hereby declare that:

This declaration is directed to:

- [x] The attached application, or
- [ ] United States application or PCT international application number _____ filed on _____.

The above-identified application was made or authorized to be made by me.

I believe that I am the original inventor or an original joint inventor of a claimed invention in the application.

I hereby acknowledge that any willful false statement made in this declaration is punishable under 18 U.S.C. 1001 by fine or imprisonment of not more than five (5) years, or both.

WARNING:

Petitioner/applicant is cautioned to avoid submitting personal information in documents filed in a patent application that may contribute to identity theft. Personal information such as social security numbers, bank account numbers, or credit card numbers (other than a check or credit card authorization form PTO-2038 submitted for payment purposes) is never required by the USPTO to support a petition or an application. If this type of personal information is included in documents submitted to the USPTO, petitioners/applicants should consider redacting such personal information from the documents before submitting them to the USPTO. Petitioner/applicant is advised that the record of a patent application is available to the public after publication of the application (unless a non-publication request in compliance with 37 CFR 1.213(a) is made in the application) or issuance of a patent. Furthermore, the record from an abandoned application may also be available to the public if the application is referenced in a published application or an issued patent (see 37 CFR 1.14). Checks and credit card authorization forms PTO-2038 submitted for payment purposes are not retained in the application file and therefore are not publicly available.

LEGAL NAME OF INVENTOR

Inventor: LARSSON, Mikael M Date (Optional): 2016-04-04

Signature: _____

Note: An application data sheet (PTO/AIA/14 or equivalent), including naming the entire inventive entity, must accompany this form. Use an additional PTO/SB/AIA01 form for each additional inventor.

This collection of information is required by 35 U.S.C. 115 and 37 CFR 1.63. The information is required to obtain or retain a benefit by the public which is to file (and by the USPTO to process) an application. Confidentiality is governed by 35 U.S.C. 122 and 37 CFR 1.11 and 1.14. This collection is estimated to take 1 minute to complete, including gathering, preparing, and submitting the completed application form to the USPTO. Time will vary depending upon the individual case. Any comments on the amount of time you require to complete this form and/or suggestions for reducing this burden, should be sent to the Chief Information Officer, U.S. Patent and Trademark Office, U.S. Department of Commerce, P.O. Box 1450, Alexandria, VA 22313-1450. DO NOT SEND FEES OR COMPLETED FORMS TO THIS ADDRESS. **SEND TO: Commissioner for Patents, P.O. Box 1450, Alexandria, VA 22313-1450.**

If you need assistance in completing the form, call 1-800-PTO-9199 and select option 2.

Privacy Act Statement

The **Privacy Act of 1974 (P.L. 93-579)** requires that you be given certain information in connection with your submission of the attached form related to a patent application or patent. Accordingly, pursuant to the requirements of the Act, please be advised that: (1) the general authority for the collection of this information is 35 U.S.C. 2(b)(2); (2) furnishing of the information solicited is voluntary; and (3) the principal purpose for which the information is used by the U.S. Patent and Trademark Office is to process and/or examine your submission related to a patent application or patent. If you do not furnish the requested information, the U.S. Patent and Trademark Office may not be able to process and/or examine your submission, which may result in termination of proceedings or abandonment of the application or expiration of the patent.

The information provided by you in this form will be subject to the following routine uses:

1. The information on this form will be treated confidentially to the extent allowed under the Freedom of Information Act (5 U.S.C. 552) and the Privacy Act (5 U.S.C 552a). Records from this system of records may be disclosed to the Department of Justice to determine whether disclosure of these records is required by the Freedom of Information Act.
2. A record from this system of records may be disclosed, as a routine use, in the course of presenting evidence to a court, magistrate, or administrative tribunal, including disclosures to opposing counsel in the course of settlement negotiations.
3. A record in this system of records may be disclosed, as a routine use, to a Member of Congress submitting a request involving an individual, to whom the record pertains, when the individual has requested assistance from the Member with respect to the subject matter of the record.
4. A record in this system of records may be disclosed, as a routine use, to a contractor of the Agency having need for the information in order to perform a contract. Recipients of information shall be required to comply with the requirements of the Privacy Act of 1974, as amended, pursuant to 5 U.S.C. 552a(m).
5. A record related to an International Application filed under the Patent Cooperation Treaty in this system of records may be disclosed, as a routine use, to the International Bureau of the World Intellectual Property Organization, pursuant to the Patent Cooperation Treaty.
6. A record in this system of records may be disclosed, as a routine use, to another federal agency for purposes of National Security review (35 U.S.C. 181) and for review pursuant to the Atomic Energy Act (42 U.S.C. 218(c)).
7. A record from this system of records may be disclosed, as a routine use, to the Administrator, General Services, or his/her designee, during an inspection of records conducted by GSA as part of that agency's responsibility to recommend improvements in records management practices and programs, under authority of 44 U.S.C. 2904 and 2906. Such disclosure shall be made in accordance with the GSA regulations governing inspection of records for this purpose, and any other relevant (*i.e.*, GSA or Commerce) directive. Such disclosure shall not be used to make determinations about individuals.
8. A record from this system of records may be disclosed, as a routine use, to the public after either publication of the application pursuant to 35 U.S.C. 122(b) or issuance of a patent pursuant to 35 U.S.C. 151. Further, a record may be disclosed, subject to the limitations of 37 CFR 1.14, as a routine use, to the public if the record was filed in an application which became abandoned or in which the proceedings were terminated and which application is referenced by either a published application, an application open to public inspection or an issued patent.
9. A record from this system of records may be disclosed, as a routine use, to a Federal, State, or local law enforcement agency, if the USPTO becomes aware of a violation or potential violation of law or regulation.

PTO/AIA/01 (06-12)
Approved for use through 01/31/2014. OMB 0651-0032
U.S. Patent and Trademark Office; U.S. DEPARTMENT OF COMMERCE
Under the Paperwork Reduction Act of 1995, no persons are required to respond to a collection of information unless it displays a valid OMB control number.

DECLARATION (37 CFR 1.63) FOR UTILITY OR DESIGN APPLICATION USING AN APPLICATION DATA SHEET (37 CFR 1.76)

Title of Invention	GYRATORY CRUSHER MAIN SHAFT AND ASSEMBLY

As the below named inventor, I hereby declare that:

This declaration is directed to:

- [x] The attached application, or
- [ ] United States application or PCT international application number _____ filed on _____.

The above-identified application was made or authorized to be made by me.

I believe that I am the original inventor or an original joint inventor of a claimed invention in the application.

I hereby acknowledge that any willful false statement made in this declaration is punishable under 18 U.S.C. 1001 by fine or imprisonment of not more than five (5) years, or both.

WARNING:

Petitioner/applicant is cautioned to avoid submitting personal information in documents filed in a patent application that may contribute to identity theft. Personal information such as social security numbers, bank account numbers, or credit card numbers (other than a check or credit card authorization form PTO-2038 submitted for payment purposes) is never required by the USPTO to support a petition or an application. If this type of personal information is included in documents submitted to the USPTO, petitioners/applicants should consider redacting such personal information from the documents before submitting them to the USPTO. Petitioner/applicant is advised that the record of a patent application is available to the public after publication of the application (unless a non-publication request in compliance with 37 CFR 1.213(a) is made in the application) or issuance of a patent. Furthermore, the record from an abandoned application may also be available to the public if the application is referenced in a published application or an issued patent (see 37 CFR 1.14). Checks and credit card authorization forms PTO-2038 submitted for payment purposes are not retained in the application file and therefore are not publicly available.

LEGAL NAME OF INVENTOR

Inventor: NILSSON, Matts-Ake Date (Optional): 20160509

Signature: Matts-Åke Nilsson

Note: An application data sheet (PTO/AIA/14 or equivalent), including naming the entire inventive entity, must accompany this form. Use an additional PTO/SB/AIA01 form for each additional inventor.

This collection of information is required by 35 U.S.C. 115 and 37 CFR 1.63. The information is required to obtain or retain a benefit by the public which is to file (and by the USPTO to process) an application. Confidentiality is governed by 35 U.S.C. 122 and 37 CFR 1.11 and 1.14. This collection is estimated to take 1 minute to complete, including gathering, preparing, and submitting the completed application form to the USPTO. Time will vary depending upon the individual case. Any comments on the amount of time you require to complete this form and/or suggestions for reducing this burden, should be sent to the Chief Information Officer, U.S. Patent and Trademark Office, U.S. Department of Commerce, P.O. Box 1450, Alexandria, VA 22313-1450. DO NOT SEND FEES OR COMPLETED FORMS TO THIS ADDRESS. **SEND TO: Commissioner for Patents, P.O. Box 1450, Alexandria, VA 22313-1450.**

If you need assistance in completing the form, call 1-800-PTO-9199 and select option 2.

PTO/AIA/01 (06-12)
Approved for use through 01/31/2014. OMB 0651-0032
U.S. Patent and Trademark Office: U.S. DEPARTMENT OF COMMERCE
Under the Paperwork Reduction Act of 1995, no persons are required to respond to a collection of information unless it displays a valid OMB control number.

DECLARATION (37 CFR 1.63) FOR UTILITY OR DESIGN APPLICATION USING AN APPLICATION DATA SHEET (37 CFR 1.76)

Title of Invention	GYRATORY CRUSHER MAIN SHAFT AND ASSEMBLY

As the below named inventor, I hereby declare that:

This declaration is directed to:

- [x] The attached application, or
- [ ] United States application or PCT international application number _____

filed on _____.

The above-identified application was made or authorized to be made by me.

I believe that I am the original inventor or an original joint inventor of a claimed invention in the application.

I hereby acknowledge that any willful false statement made in this declaration is punishable under 18 U.S.C. 1001 by fine or imprisonment of not more than five (5) years, or both.

WARNING:

Petitioner/applicant is cautioned to avoid submitting personal information in documents filed in a patent application that may contribute to identity theft. Personal information such as social security numbers, bank account numbers, or credit card numbers (other than a check or credit card authorization form PTO-2038 submitted for payment purposes) is never required by the USPTO to support a petition or an application. If this type of personal information is included in documents submitted to the USPTO, petitioners/applicants should consider redacting such personal information from the documents before submitting them to the USPTO. Petitioner/applicant is advised that the record of a patent application is available to the public after publication of the application (unless a non-publication request in compliance with 37 CFR 1.213(a) is made in the application) or issuance of a patent. Furthermore, the record from an abandoned application may also be available to the public if the application is referenced in a published application or an issued patent (see 37 CFR 1.14). Checks and credit card authorization forms PTO-2038 submitted for payment purposes are not retained in the application file and therefore are not publicly available.

LEGAL NAME OF INVENTOR

Inventor: MALMQVIST, Patric Date (Optional): 2016-04-05

Signature: _____

Note: An application data sheet (PTO/AIA/14 or equivalent), including naming the entire inventive entity, must accompany this form. Use an additional PTO/SB/AIA01 form for each additional inventor.

This collection of information is required by 35 U.S.C. 115 and 37 CFR 1.63. The information is required to obtain or retain a benefit by the public which is to file (and by the USPTO to process) an application. Confidentiality is governed by 35 U.S.C. 122 and 37 CFR 1.11 and 1.14. This collection is estimated to take 1 minute to complete, including gathering, preparing, and submitting the completed application form to the USPTO. Time will vary depending upon the individual case. Any comments on the amount of time you require to complete this form and/or suggestions for reducing this burden, should be sent to the Chief Information Officer, U.S. Patent and Trademark Office, U.S. Department of Commerce, P.O. Box 1450, Alexandria, VA 22313-1450. DO NOT SEND FEES OR COMPLETED FORMS TO THIS ADDRESS. **SEND TO: Commissioner for Patents, P.O. Box 1450, Alexandria, VA 22313-1450.**

If you need assistance in completing the form, call 1-800-PTO-9199 and select option 2.

Privacy Act Statement

The **Privacy Act of 1974 (P.L. 93-579)** requires that you be given certain information in connection with your submission of the attached form related to a patent application or patent. Accordingly, pursuant to the requirements of the Act, please be advised that: (1) the general authority for the collection of this information is 35 U.S.C. 2(b)(2); (2) furnishing of the information solicited is voluntary; and (3) the principal purpose for which the information is used by the U.S. Patent and Trademark Office is to process and/or examine your submission related to a patent application or patent. If you do not furnish the requested information, the U.S. Patent and Trademark Office may not be able to process and/or examine your submission, which may result in termination of proceedings or abandonment of the application or expiration of the patent.

The information provided by you in this form will be subject to the following routine uses:

1. The information on this form will be treated confidentially to the extent allowed under the Freedom of Information Act (5 U.S.C. 552) and the Privacy Act (5 U.S.C 552a). Records from this system of records may be disclosed to the Department of Justice to determine whether disclosure of these records is required by the Freedom of Information Act.
2. A record from this system of records may be disclosed, as a routine use, in the course of presenting evidence to a court, magistrate, or administrative tribunal, including disclosures to opposing counsel in the course of settlement negotiations.
3. A record in this system of records may be disclosed, as a routine use, to a Member of Congress submitting a request involving an individual, to whom the record pertains, when the individual has requested assistance from the Member with respect to the subject matter of the record.
4. A record in this system of records may be disclosed, as a routine use, to a contractor of the Agency having need for the information in order to perform a contract. Recipients of information shall be required to comply with the requirements of the Privacy Act of 1974, as amended, pursuant to 5 U.S.C. 552a(m).
5. A record related to an International Application filed under the Patent Cooperation Treaty in this system of records may be disclosed, as a routine use, to the International Bureau of the World Intellectual Property Organization, pursuant to the Patent Cooperation Treaty.
6. A record in this system of records may be disclosed, as a routine use, to another federal agency for purposes of National Security review (35 U.S.C. 181) and for review pursuant to the Atomic Energy Act (42 U.S.C. 218(c)).
7. A record from this system of records may be disclosed, as a routine use, to the Administrator, General Services, or his/her designee, during an inspection of records conducted by GSA as part of that agency's responsibility to recommend improvements in records management practices and programs, under authority of 44 U.S.C. 2904 and 2906. Such disclosure shall be made in accordance with the GSA regulations governing inspection of records for this purpose, and any other relevant (*i.e.*, GSA or Commerce) directive. Such disclosure shall not be used to make determinations about individuals.
8. A record from this system of records may be disclosed, as a routine use, to the public after either publication of the application pursuant to 35 U.S.C. 122(b) or issuance of a patent pursuant to 35 U.S.C. 151. Further, a record may be disclosed, subject to the limitations of 37 CFR 1.14, as a routine use, to the public if the record was filed in an application which became abandoned or in which the proceedings were terminated and which application is referenced by either a published application, an application open to public inspection or an issued patent.
9. A record from this system of records may be disclosed, as a routine use, to a Federal, State, or local law enforcement agency, if the USPTO becomes aware of a violation or potential violation of law or regulation.

PTO/AIA/01 (06-12)
Approved for use through 01/31/2014. OMB 0651-0032
U.S. Patent and Trademark Office, U.S. DEPARTMENT OF COMMERCE
Under the Paperwork Reduction Act of 1995, no persons are required to respond to a collection of information unless it displays a valid OMB control number.

DECLARATION (37 CFR 1.63) FOR UTILITY OR DESIGN APPLICATION USING AN APPLICATION DATA SHEET (37 CFR 1.76)

Title of Invention	GYRATORY CRUSHER MAIN SHAFT AND ASSEMBLY

As the below named inventor, I hereby declare that:

This declaration is directed to:

- [x] The attached application, or
- [ ] United States application or PCT international application number _____

filed on _____.

The above-identified application was made or authorized to be made by me.

I believe that I am the original inventor or an original joint inventor of a claimed invention in the application.

I hereby acknowledge that any willful false statement made in this declaration is punishable under 18 U.S.C. 1001 by fine or imprisonment of not more than five (5) years, or both.

WARNING:

Petitioner/applicant is cautioned to avoid submitting personal information in documents filed in a patent application that may contribute to identity theft. Personal information such as social security numbers, bank account numbers, or credit card numbers (other than a check or credit card authorization form PTO-2038 submitted for payment purposes) is never required by the USPTO to support a petition or an application. If this type of personal information is included in documents submitted to the USPTO, petitioners/applicants should consider redacting such personal information from the documents before submitting them to the USPTO. Petitioner/applicant is advised that the record of a patent application is available to the public after publication of the application (unless a non-publication request in compliance with 37 CFR 1.213(a) is made in the application) or issuance of a patent. Furthermore, the record from an abandoned application may also be available to the public if the application is referenced in a published application or an issued patent (see 37 CFR 1.14). Checks and credit card authorization forms PTO-2038 submitted for payment purposes are not retained in the application file and therefore are not publicly available.

LEGAL NAME OF INVENTOR

Inventor: ERIKSSON, Fredrik Date (Optional): _____

Signature: _____

Note: An application data sheet (PTO/AIA/14 or equivalent), including naming the entire inventive entity, must accompany this form. Use an additional PTO/SB/AIA01 form for each additional inventor.

This collection of information is required by 35 U.S.C. 115 and 37 CFR 1.63. The information is required to obtain or retain a benefit by the public which is to file (and by the USPTO to process) an application. Confidentiality is governed by 35 U.S.C. 122 and 37 CFR 1.11 and 1.14. This collection is estimated to take 1 minute to complete, including gathering, preparing, and submitting the completed application form to the USPTO. Time will vary depending upon the individual case. Any comments on the amount of time you require to complete this form and/or suggestions for reducing this burden, should be sent to the Chief Information Officer, U.S. Patent and Trademark Office, U.S. Department of Commerce, P.O. Box 1450, Alexandria, VA 22313-1450. DO NOT SEND FEES OR COMPLETED FORMS TO THIS ADDRESS. **SEND TO: Commissioner for Patents, P.O. Box 1450, Alexandria, VA 22313-1450.**

If you need assistance in completing the form, call 1-800-PTO-9199 and select option 2.

PTO/AIA/01 (06-12)
Approved for use through 01/31/2014. OMB 0651-0032
U.S. Patent and Trademark Office; U.S. DEPARTMENT OF COMMERCE
Under the Paperwork Reduction Act of 1995, no persons are required to respond to a collection of information unless it displays a valid OMB control number.

DECLARATION (37 CFR 1.63) FOR UTILITY OR DESIGN APPLICATION USING AN APPLICATION DATA SHEET (37 CFR 1.76)

Title of Invention	GYRATORY CRUSHER MAIN SHAFT AND ASSEMBLY

As the below named inventor, I hereby declare that:

This declaration is directed to:

- [x] The attached application, or
- [ ] United States application or PCT international application number _____ filed on _____.

The above-identified application was made or authorized to be made by me.

I believe that I am the original inventor or an original joint inventor of a claimed invention in the application.

I hereby acknowledge that any willful false statement made in this declaration is punishable under 18 U.S.C. 1001 by fine or imprisonment of not more than five (5) years, or both.

WARNING:

Petitioner/applicant is cautioned to avoid submitting personal information in documents filed in a patent application that may contribute to identity theft. Personal information such as social security numbers, bank account numbers, or credit card numbers (other than a check or credit card authorization form PTO-2038 submitted for payment purposes) is never required by the USPTO to support a petition or an application. If this type of personal information is included in documents submitted to the USPTO, petitioners/applicants should consider redacting such personal information from the documents before submitting them to the USPTO. Petitioner/applicant is advised that the record of a patent application is available to the public after publication of the application (unless a non-publication request in compliance with 37 CFR 1.213(a) is made in the application) or issuance of a patent. Furthermore, the record from an abandoned application may also be available to the public if the application is referenced in a published application or an issued patent (see 37 CFR 1.14). Checks and credit card authorization forms PTO-2038 submitted for payment purposes are not retained in the application file and therefore are not publicly available.

LEGAL NAME OF INVENTOR

Inventor: NILSSON, Matts-Ake Date (Optional): 20160509

Signature: Matts-Åke Nilsson

Note: An application data sheet (PTO/AIA/14 or equivalent), including naming the entire inventive entity, must accompany this form. Use an additional PTO/SB/AIA01 form for each additional inventor.

This collection of information is required by 35 U.S.C. 115 and 37 CFR 1.63. The information is required to obtain or retain a benefit by the public which is to file (and by the USPTO to process) an application. Confidentiality is governed by 35 U.S.C. 122 and 37 CFR 1.11 and 1.14. This collection is estimated to take 1 minute to complete, including gathering, preparing, and submitting the completed application form to the USPTO. Time will vary depending upon the individual case. Any comments on the amount of time you require to complete this form and/or suggestions for reducing this burden, should be sent to the Chief Information Officer, U.S. Patent and Trademark Office, U.S. Department of Commerce, P.O. Box 1450, Alexandria, VA 22313-1450. DO NOT SEND FEES OR COMPLETED FORMS TO THIS ADDRESS. **SEND TO: Commissioner for Patents, P.O. Box 1450, Alexandria, VA 22313-1450.**

If you need assistance in completing the form, call 1-800-PTO-9199 and select option 2.

Privacy Act Statement

The **Privacy Act of 1974 (P.L. 93-579)** requires that you be given certain information in connection with your submission of the attached form related to a patent application or patent. Accordingly, pursuant to the requirements of the Act, please be advised that: (1) the general authority for the collection of this information is 35 U.S.C. 2(b)(2); (2) furnishing of the information solicited is voluntary; and (3) the principal purpose for which the information is used by the U.S. Patent and Trademark Office is to process and/or examine your submission related to a patent application or patent. If you do not furnish the requested information, the U.S. Patent and Trademark Office may not be able to process and/or examine your submission, which may result in termination of proceedings or abandonment of the application or expiration of the patent.

The information provided by you in this form will be subject to the following routine uses:

1. The information on this form will be treated confidentially to the extent allowed under the Freedom of Information Act (5 U.S.C. 552) and the Privacy Act (5 U.S.C 552a). Records from this system of records may be disclosed to the Department of Justice to determine whether disclosure of these records is required by the Freedom of Information Act.
2. A record from this system of records may be disclosed, as a routine use, in the course of presenting evidence to a court, magistrate, or administrative tribunal, including disclosures to opposing counsel in the course of settlement negotiations.
3. A record in this system of records may be disclosed, as a routine use, to a Member of Congress submitting a request involving an individual, to whom the record pertains, when the individual has requested assistance from the Member with respect to the subject matter of the record.
4. A record in this system of records may be disclosed, as a routine use, to a contractor of the Agency having need for the information in order to perform a contract. Recipients of information shall be required to comply with the requirements of the Privacy Act of 1974, as amended, pursuant to 5 U.S.C. 552a(m).
5. A record related to an International Application filed under the Patent Cooperation Treaty in this system of records may be disclosed, as a routine use, to the International Bureau of the World Intellectual Property Organization, pursuant to the Patent Cooperation Treaty.
6. A record in this system of records may be disclosed, as a routine use, to another federal agency for purposes of National Security review (35 U.S.C. 181) and for review pursuant to the Atomic Energy Act (42 U.S.C. 218(c)).
7. A record from this system of records may be disclosed, as a routine use, to the Administrator, General Services, or his/her designee, during an inspection of records conducted by GSA as part of that agency's responsibility to recommend improvements in records management practices and programs, under authority of 44 U.S.C. 2904 and 2906. Such disclosure shall be made in accordance with the GSA regulations governing inspection of records for this purpose, and any other relevant (*i.e.*, GSA or Commerce) directive. Such disclosure shall not be used to make determinations about individuals.
8. A record from this system of records may be disclosed, as a routine use, to the public after either publication of the application pursuant to 35 U.S.C. 122(b) or issuance of a patent pursuant to 35 U.S.C. 151. Further, a record may be disclosed, subject to the limitations of 37 CFR 1.14, as a routine use, to the public if the record was filed in an application which became abandoned or in which the proceedings were terminated and which application is referenced by either a published application, an application open to public inspection or an issued patent.
9. A record from this system of records may be disclosed, as a routine use, to a Federal, State, or local law enforcement agency, if the USPTO becomes aware of a violation or potential violation of law or regulation.

Electronic Patent Application Fee Transmittal

Application Number:	15035774
Filing Date:	11-May-2016
Title of Invention:	GYRATORY CRUSHER MAIN SHAFT AND ASSEMBLY
First Named Inventor/Applicant Name:	Axel BERGMAN
Filer:	Corinne R. Gorski
Attorney Docket Number:	SC 14208WOUS

Filed as Large Entity

Filing Fees for U.S. National Stage under 35 USC 371

Description	Fee Code	Quantity	Amount	Sub-Total in USD($)
Basic Filing:				
Pages:				
Claims:				
Miscellaneous-Filing:				
OATH/DECL > 30 MOS FROM 371 COMMENCEMENT	1617	1	140	140
PROCESSING FEE, EXCEPT PROV. APPLS.	1830	1	140	140
Petition:				
Patent-Appeals-and-Interference:				

Description	Fee Code	Quantity	Amount	Sub-Total in USD($)
Post-Allowance-and-Post-Issuance:				
Extension-of-Time:				
Miscellaneous:				
			Total in USD ($)	**280**

Electronic Acknowledgement Receipt

EFS ID:	37133697
Application Number:	15035774
International Application Number:	
Confirmation Number:	3999
Title of Invention:	GYRATORY CRUSHER MAIN SHAFT AND ASSEMBLY
First Named Inventor/Applicant Name:	Axel BERGMAN
Customer Number:	78686
Filer:	Corinne R. Gorski
Filer Authorized By:	
Attorney Docket Number:	SC 14208WOUS
Receipt Date:	11-SEP-2019
Filing Date:	11-MAY-2016
Time Stamp:	15:06:21
Application Type:	U.S. National Stage under 35 USC 371

Payment information:

Submitted with Payment	yes
Payment Type	DA
Payment was successfully received in RAM	$280
RAM confirmation Number	E20199AF06467132
Deposit Account	505792
Authorized User	Corinne Gorski

The Director of the USPTO is hereby authorized to charge indicated fees and credit any overpayment as follows:

37 CFR 1.17 (Patent application and reexamination processing fees)

37 CFR 1.19 (Document supply fees)

37 CFR 1.20 (Post Issuance fees)

37 CFR 1.21 (Miscellaneous fees and charges)

File Listing:

Document Number	Document Description	File Name	File Size(Bytes)/ Message Digest	Multi Part /.zip	Pages (if appl.)
1	Issue Fee Payment (PTO-85B)	14208WOUSIssueFeePartBII.pdf	145931 e353991f11f1b15528b4afb5ea0056db633cbc56	no	1
Warnings:					
Information:					
2	Oath or Declaration filed	14208WOUSSignedOathBergman.pdf	830762 143dec84568d84eb257fcc003f613e42bde0b6bb	no	2
Warnings:					
Information:					
3	Oath or Declaration filed	14208WOUSSignedOathEriksson.pdf	915770 de81c32965c002b600f0148d79a9d5f46d76e678	no	2
Warnings:					
Information:					
4	Oath or Declaration filed	14208WOUSSignedOathEriksonBA.pdf	833476 0b2350a78257e0c0561158dd85df9b347bd37d60	no	2
Warnings:					
Information:					
5	Oath or Declaration filed	14208WOUSSignedOathHallberg.pdf	835342 7b9f52d4b462742985705d077c6bd7a42f6bd1f3	no	2
Warnings:					
Information:					
6	Oath or Declaration filed	14208WOUSSignedOathHolmberg.pdf	669102 8d7874a9a406d4d72065c9c7d4fda5522655b363	no	2
Warnings:					
Information:					

7	Oath or Declaration filed	14208WOUSSignedOathLarsson.pdf	1345910 34bb36ef097d739b4d1a866f574abcb8d002d0bd	no	3
Warnings:					
Information:					
8	Oath or Declaration filed	14208WOUSSignedOathMalmqvist.pdf	1344748 fc3ab56c947797c95c06bb06306b0a2cc2fe7956	no	3
Warnings:					
Information:					
9	Oath or Declaration filed	14208WOUSSignedOathNilsson.pdf	911022 689148f6edb764d00943fd7aeafea5438ffd1d03	no	2
Warnings:					
Information:					
10	Fee Worksheet (SB06)	fee-info.pdf	32184 aea8d2a1ca983bdcba4f4255530f05e65bcb1d22	no	2
Warnings:					
Information:					
		Total Files Size (in bytes):	7864247		

This Acknowledgement Receipt evidences receipt on the noted date by the USPTO of the indicated documents, characterized by the applicant, and including page counts, where applicable. It serves as evidence of receipt similar to a Post Card, as described in MPEP 503.

<u>New Applications Under 35 U.S.C. 111</u>
If a new application is being filed and the application includes the necessary components for a filing date (see 37 CFR 1.53(b)-(d) and MPEP 506), a Filing Receipt (37 CFR 1.54) will be issued in due course and the date shown on this Acknowledgement Receipt will establish the filing date of the application.
<u>National Stage of an International Application under 35 U.S.C. 371</u>
If a timely submission to enter the national stage of an international application is compliant with the conditions of 35 U.S.C. 371 and other applicable requirements a Form PCT/DO/EO/903 indicating acceptance of the application as a national stage submission under 35 U.S.C. 371 will be issued in addition to the Filing Receipt, in due course.
<u>New International Application Filed with the USPTO as a Receiving Office</u>
If a new international application is being filed and the international application includes the necessary components for an international filing date (see PCT Article 11 and MPEP 1810), a Notification of the International Application Number and of the International Filing Date (Form PCT/RO/105) will be issued in due course, subject to prescriptions concerning national security, and the date shown on this Acknowledgement Receipt will establish the international filing date of the application.

UNITED STATES PATENT AND TRADEMARK OFFICE

UNITED STATES DEPARTMENT OF COMMERCE
United States Patent and Trademark Office
Address: COMMISSIONER FOR PATENTS
P.O. Box 1450
Alexandria, Virginia 22313-1450
www.uspto.gov

APPLICATION NO.	FILING DATE	FIRST NAMED INVENTOR	ATTORNEY DOCKET NO.	CONFIRMATION NO.
15/035,774	05/11/2016	Axel BERGMAN	SC 14208WOUS	3999

7590 09/23/2019

Sandvik Intellectual Property
4730 Consulate Plaza Drive
Suite 190
Houston, TX 77032

EXAMINER	
FRANCIS, FAYE	
ART UNIT	PAPER NUMBER
3725	
NOTIFICATION DATE	DELIVERY MODE
09/23/2019	ELECTRONIC

Notice of Abandonment

This application is abandoned in view of:

1. ☐ The applicant's failure to timely file a proper reply to the Office letter mailed on _____.
   (a) ☐ A reply was received on _____ (with a Certificate of Mailing or Transmission date _____), which is after the expiration of the period for reply (including a total extension of ____ month(s)) which expired on _____.
   (b) ☐ No reply has been received.
2. ☐ Applicant's failure to timely pay the required issue fee and publication fee, if applicable, within the statutory period of three months from the mailing date of the Notice of Allowance (PTOL-85).
   (a) ☐ The issue fee and publication fee, if applicable, was received on _____ (with a Certificate of Mailing or Transmission date _____), which is after the expiration of the statutory period for payment of the issue fee (and publication fee) set in the Notice of Allowance (PTOL-85).
   (b) ☐ The submitted fee of $_____ is insufficient. A balance of $_____ is due.
   The issue fee required by 37 CFR 1.18 is $_____.
   The publication fee, if required by 37 CFR 1.18(d), is $_____.
   (c) ☐ The issue fee and publication fee, if applicable, has not been received.
3. ☐ Applicant's failure to timely file corrected drawings as required by, and within the three-month period set in, the Notice of Allowability (PTO-37).
   (a) ☐ Proposed corrected drawings were received on _____ (with a Certificate of Mailing or Transmission dated _____), which is after the expiration of the period for reply.
   (b) ☑ No corrected drawing have been received.
4. ☑ Applicant's failure to timely file the inventor's oath or declaration no later than the date on which the issue fee was paid as required by the Notice Requiring Inventor's Oath or Declaration (PTO-2306).
   (a) ☐ An inventor's oath or declaration was received on _____ (with a Certificate of Mailing or Transmission date _____), which is after the date on which the issue fee was paid.
   (b) ☑ While an oath or declaration (or substitute statement) for one or more inventors was received, an oath or declaration (or substitute statement) for at least one other inventor has not been received.
   (c) ☐ No inventor's oath or declaration has been received.
5. ☐ Drawings received on _____ were disapproved by examiner. See examiner's response dated _____.
6. ☐ Corrected drawings were received on _____ , which is after the expiration of the one-month period for reply set in examiner's response dated _____.
7. ☐ No corrected drawings have been received in reply to one-month period set in examiner's response dated _____.
8. ☑ The reason(s) below: Need oath for Ame Holomberg. See 6-3-19 R48, REQ. DIS.

Petitions to revive under 37 CFR 1.137(a) or request to withdraw the holding of abandonment under 37 CFR 1.181, should be promptly filed to minimize any negative effects on patent term.

/ATL/

(571)-272-4200 or 1(888)-786-0101
Patent Publication Branch
Office of Data Management

FORM PTO-ABN0 (Rev. 03/17)

Electronic Patent Application Fee Transmittal

Application Number:	15035774
Filing Date:	11-May-2016
Title of Invention:	GYRATORY CRUSHER MAIN SHAFT AND ASSEMBLY
First Named Inventor/Applicant Name:	Axel BERGMAN
Filer:	Corinne R. Gorski
Attorney Docket Number:	SC 14208WOUS

Filed as Large Entity

Filing Fees for U.S. National Stage under 35 USC 371

Description	Fee Code	Quantity	Amount	Sub-Total in USD($)
Basic Filing:				
Pages:				
Claims:				
Miscellaneous-Filing:				
Petition:				
PET. REVIVE ABANDON APP, DELAY PYMT-RESP	1453	1	2000	2000
Patent-Appeals-and-Interference:				
Post-Allowance-and-Post-Issuance:				

Description	Fee Code	Quantity	Amount	Sub-Total in USD($)
Extension-of-Time:				
Miscellaneous:				
			Total in USD ($)	**2000**

Electronic Acknowledgement Receipt

EFS ID:	39762819
Application Number:	15035774
International Application Number:	
Confirmation Number:	3999
Title of Invention:	GYRATORY CRUSHER MAIN SHAFT AND ASSEMBLY
First Named Inventor/Applicant Name:	Axel BERGMAN
Customer Number:	78686
Filer:	Corinne R. Gorski
Filer Authorized By:	
Attorney Docket Number:	SC 14208WOUS
Receipt Date:	18-JUN-2020
Filing Date:	11-MAY-2016
Time Stamp:	15:55:17
Application Type:	U.S. National Stage under 35 USC 371

Payment information:

Submitted with Payment	yes
Payment Type	DA
Payment was successfully received in RAM	$2000
RAM confirmation Number	E20206HF55399546
Deposit Account	505792
Authorized User	Corinne Gorski

The Director of the USPTO is hereby authorized to charge indicated fees and credit any overpayment as follows:

37 CFR 1.17 (Patent application and reexamination processing fees)

37 CFR 1.19 (Document supply fees)

37 CFR 1.20 (Post Issuance fees)

37 CFR 1.21 (Miscellaneous fees and charges)

File Listing:

Document Number	Document Description	File Name	File Size(Bytes)/ Message Digest	Multi Part /.zip	Pages (if appl.)
1	Petition for review by the PCT legal office	14208WOUSPetitiontoRevivesb0064.pdf	217351 4469a34082039307dd7006cd3c4ef81af1907a15	no	3
Warnings:					
Information:					
2	Affidavit-not covered under specific rule	14208WOUSGorskiStatement.pdf	809249 6a9f84bd0eea6773a4a2f1087bcf90eb13711a25	no	3
Warnings:					
Information:					
3	Fee Worksheet (SB06)	fee-info.pdf	30425 8f454e1f16df61e0e0b48eedf6b47b683d8a1535	no	2
Warnings:					
Information:					
		Total Files Size (in bytes):	1057025		

This Acknowledgement Receipt evidences receipt on the noted date by the USPTO of the indicated documents, characterized by the applicant, and including page counts, where applicable. It serves as evidence of receipt similar to a Post Card, as described in MPEP 503.

New Applications Under 35 U.S.C. 111

If a new application is being filed and the application includes the necessary components for a filing date (see 37 CFR 1.53(b)-(d) and MPEP 506), a Filing Receipt (37 CFR 1.54) will be issued in due course and the date shown on this Acknowledgement Receipt will establish the filing date of the application.

National Stage of an International Application under 35 U.S.C. 371

If a timely submission to enter the national stage of an international application is compliant with the conditions of 35 U.S.C. 371 and other applicable requirements a Form PCT/DO/EO/903 indicating acceptance of the application as a national stage submission under 35 U.S.C. 371 will be issued in addition to the Filing Receipt, in due course.

New International Application Filed with the USPTO as a Receiving Office

If a new international application is being filed and the international application includes the necessary components for an international filing date (see PCT Article 11 and MPEP 1810), a Notification of the International Application Number and of the International Filing Date (Form PCT/RO/105) will be issued in due course, subject to prescriptions concerning national security, and the date shown on this Acknowledgement Receipt will establish the international filing date of the application.

Doc Code: PET.OP
Document Description: Petition for Review by the Office of Petitions

PTO/SB/64 (01-18)
Approved for use through 11/30/2020. OMB 0651-0031
U.S. Patent and Trademark Office; U.S. DEPARTMENT OF COMMERCE
Under the Paperwork Reduction Act of 1995, no persons are required to respond to a collection of information unless it displays a valid OMB control number.

PETITION FOR REVIVAL OF AN APPLICATION FOR PATENT ABANDONED UNINTENTIONALLY UNDER 37 CFR 1.137(a)

Docket Number (Optional): SC 14208WOUS

First named inventor: Axel Bergman

Application No.: 15/035,774 Art Unit: 3725

Filed: May 11, 2016 Examiner: Faye Francis

Title: Gyratory Crusher Main Shaft and Assembly

Attention: Office of Petitions
Mail Stop Petition
Commissioner for Patents
P.O. Box 1450
Alexandria, VA 22313-1450
FAX (571) 273-8300

NOTE: If information or assistance is needed in completing this form, please contact the Office of Petitions at (571) 272-3282.

The above-identified application became abandoned for failure to file a timely and proper reply to a notice or action by the United States Patent and Trademark Office. The date of abandonment is the day after the expiration date of the period set for reply in the Office notice or action plus any extensions of time actually obtained.

APPLICANT HEREBY PETITIONS FOR REVIVAL OF THIS APPLICATION.

NOTE: A grantable petition requires the following items:

(1) Petition fee;
(2) Reply and/or issue fee;
(3) Terminal disclaimer with disclaimer fee – required for all utility and plant applications filed before June 8, 1995, and for all design applications; and
(4) Statement that the entire delay was unintentional.

1. **Petition fee**

☐ Small entity fee $ _____ (37 CFR 1.17(m)). Applicant asserts small entity status. See 37 CFR 1.27.

☐ Micro entity fee $ _____ (37 CFR 1.17(m)). Applicant certifies micro entity status. See 37 CFR 1.29. Form PTO/SB/15A or B or equivalent must either be enclosed or have been submitted previously.

☒ Undiscounted fee $ 2000 (37 CFR 1.17(m)).

2. **Reply and/or fee**

A The reply and/or fee to the above-noted Office notice or action in the form of

_____ (identify the type of reply):

☐ has been filed previously on _____.

☐ is enclosed herewith.

B The issue fee and publication fee (if applicable) of $ 1000

☒ has been paid previously on May 28, 2019.

☐ is enclosed herewith.

This collection of information is required by 37 CFR 1.137(b). The information is required to obtain or retain a benefit by the public which is to file (and by the USPTO to process) an application. Confidentiality is governed by 35 U.S.C. 122 and 37 CFR 1.11, 1.14 and 41.6. This collection is estimated to take 1 hour to complete, including gathering, preparing, and submitting the completed application form to the USPTO. Time will vary depending upon the individual case. Any comments on the amount of time you require to complete this form and/or suggestions for reducing this burden, should be sent to the Chief Information Officer, U.S. Patent and Trademark Office, U.S. Department of Commerce, P.O. Box 1450, Alexandria, VA 22313-1450. DO NOT SEND FEES OR COMPLETED FORMS TO THIS ADDRESS. **SEND TO: Mail Stop Petition, Commissioner for Patents, P.O. Box 1450, Alexandria, VA 22313-1450.**

If you need assistance in completing the form, call 1-800-PTO-9199 and select option 2.

Doc Code: PET.OP
Document Description: Petition for Review by the Office of Petitions

PTO/SB/64 (01-18)
Approved for use through 11/30/2020. OMB 0651-0031
U.S. Patent and Trademark Office; U.S. DEPARTMENT OF COMMERCE
Under the Paperwork Reduction Act of 1995, no persons are required to respond to a collection of information unless it displays a valid OMB control number.

PETITION FOR REVIVAL OF AN APPLICATION FOR PATENT ABANDONED UNINTENTIONALLY UNDER 37 CFR 1.137(a)

3. **Terminal disclaimer with disclaimer fee**

☒ Since this utility/plant application was filed on or after June 8, 1995, no terminal disclaimer is required.

☐ A terminal disclaimer (and disclaimer fee (37 CFR 1.20(d)) of $ _____) disclaiming the required period of time is enclosed herewith (see PTO/SB/63).

4. **STATEMENT:** The entire delay in filing the required reply from the due date for the required reply until the filing of a grantable petition under 37 CFR 1.137(a) was unintentional. [NOTE: The United States Patent and Trademark Office may require additional information if there is a question as to whether either the abandonment or the delay in filing a petition under 37 CFR 1.137(a) was unintentional (MPEP 711.03(c), subsections (III)(C) and (D)).]

WARNING:

Petitioner/applicant is cautioned to avoid submitting personal information in documents filed in a patent application that may contribute to identity theft. Personal information such as social security numbers, bank account numbers, or credit card numbers (other than a check or credit card authorization form PTO-2038 submitted for payment purposes) is never required by the USPTO to support a petition or an application. If this type of personal information is included in documents submitted to the USPTO, petitioners/applicants should consider redacting such personal information from the documents before submitting them to the USPTO. Petitioner/applicant is advised that the record of a patent application is available to the public after publication of the application (unless a non-publication request in compliance with 37 CFR 1.213(a) is made in the application) or issuance of a patent. Furthermore, the record from an abandoned application may also be available to the public if the application is referenced in a published application or an issued patent (see 37 CFR 1.14). Checks and credit card authorization forms PTO-2038 submitted for payment purposes are not retained in the application file and therefore are not publicly available.

/Corinne R. Gorski/	June 18, 2020
Signature	Date
Corinne R. Gorski	34339
Typed or Printed Name	Registration Number, if applicable
corinne.gorski@sandvik.com	703-505-4761
Address	Telephone Number
Address	

Enclosures:

☒ Fee Payment

☐ Reply

☐ Terminal Disclaimer Form

☒ Additional sheet(s) containing statements establishing unintentional delay

☐ Other: _____

CERTIFICATE OF MAILING OR TRANSMISSION [37 CFR 1.8(a)]

I hereby certify that this correspondence is being:

☐ Deposited with the United States Postal Service on the date shown below with sufficient postage as first class mail in an envelope addressed to: Mail Stop Petition, Commissioner for Patents, P. O. Box 1450, Alexandria, VA 22313-1450.

☐ Transmitted by facsimile on the date shown below to the United States Patent and Trademark Office at (571) 273-8300.

Date	Signature
	Typed or printed name of person signing certificate

Privacy Act Statement

The **Privacy Act of 1974 (P.L. 93-579)** requires that you be given certain information in connection with your submission of the attached form related to a patent application or patent. Accordingly, pursuant to the requirements of the Act, please be advised that: (1) the general authority for the collection of this information is 35 U.S.C. 2(b)(2); (2) furnishing of the information solicited is voluntary; and (3) the principal purpose for which the information is used by the U.S. Patent and Trademark Office is to process and/or examine your submission related to a patent application or patent. If you do not furnish the requested information, the U.S. Patent and Trademark Office may not be able to process and/or examine your submission, which may result in termination of proceedings or abandonment of the application or expiration of the patent.

The information provided by you in this form will be subject to the following routine uses:

1. The information on this form will be treated confidentially to the extent allowed under the Freedom of Information Act (5 U.S.C. 552) and the Privacy Act (5 U.S.C 552a). Records from this system of records may be disclosed to the Department of Justice to determine whether disclosure of these records is required by the Freedom of Information Act.
2. A record from this system of records may be disclosed, as a routine use, in the course of presenting evidence to a court, magistrate, or administrative tribunal, including disclosures to opposing counsel in the course of settlement negotiations.
3. A record in this system of records may be disclosed, as a routine use, to a Member of Congress submitting a request involving an individual, to whom the record pertains, when the individual has requested assistance from the Member with respect to the subject matter of the record.
4. A record in this system of records may be disclosed, as a routine use, to a contractor of the Agency having need for the information in order to perform a contract. Recipients of information shall be required to comply with the requirements of the Privacy Act of 1974, as amended, pursuant to 5 U.S.C. 552a(m).
5. A record related to an International Application filed under the Patent Cooperation Treaty in this system of records may be disclosed, as a routine use, to the International Bureau of the World Intellectual Property Organization, pursuant to the Patent Cooperation Treaty.
6. A record in this system of records may be disclosed, as a routine use, to another federal agency for purposes of National Security review (35 U.S.C. 181) and for review pursuant to the Atomic Energy Act (42 U.S.C. 218(c)).
7. A record from this system of records may be disclosed, as a routine use, to the Administrator, General Services, or his/her designee, during an inspection of records conducted by GSA as part of that agency's responsibility to recommend improvements in records management practices and programs, under authority of 44 U.S.C. 2904 and 2906. Such disclosure shall be made in accordance with the GSA regulations governing inspection of records for this purpose, and any other relevant (*i.e.*, GSA or Commerce) directive. Such disclosure shall not be used to make determinations about individuals.
8. A record from this system of records may be disclosed, as a routine use, to the public after either publication of the application pursuant to 35 U.S.C. 122(b) or issuance of a patent pursuant to 35 U.S.C. 151. Further, a record may be disclosed, subject to the limitations of 37 CFR 1.14, as a routine use, to the public if the record was filed in an application which became abandoned or in which the proceedings were terminated and which application is referenced by either a published application, an application open to public inspection or an issued patent.
9. A record from this system of records may be disclosed, as a routine use, to a Federal, State, or local law enforcement agency, if the USPTO becomes aware of a violation or potential violation of law or regulation.

IN THE UNITED STATES PATENT AND TRADEMARK OFFICE

In re Patent Application of	)	
	)	
Axel BERGMAN et al	)	Confirmation No.: 3999
	)	
Application No.: 15/035,774	)	
	)	Examiner: Faye Francis
	)	
Filed: May 11, 2016	)	
	)	Group Art Unit: 3725
For: GYRATORY CRUSHER MAIN SHAFT AND ASSEMBLY	)	

United States Patent & Trademark Office
Commissioner for Patents
P.O. Box 1450
Alexandria, VA 22313

STATEMENT OF CORINNE R. GORSKI IN SUPPORT OF PETITION UNDER 37 C.F.R. § 1.137(a)

Sir:

I, CORINNE R. GORSKI, do hereby declare and state as follows:

1. I am an attorney at Sandvik Intellectual Property/ Sandvik Mining and Rock Technology (herein "Sandvik"). Part of my duties includes the filing and prosecuting of patent applications before the U.S. Patent Office.

2. At the time of filing inventor Anne Holmberg's name was misspelled on the ADS as "Holomberg."

3. A Request for the Correction to Inventor Name under 37 CFR 1.48(f) was filed on July 13, 2016 along with a corrected ADS indicating the correct spelling of Ms. Homberg's last name and a signed oath/declaration by Anne "Holmberg." Oaths for the remaining inventors were also filed at this time along with a $140 surcharge fee for submission of late oaths, as well

as, a processing fee for $130. See Electronic Patent Application Fee Transmittal and Electronic Acknowledgement Receipt EFS ID 26340281.

4. The application was allowed and the issue fee was paid on May 28, 2019.

5. An Improper Submission of Request under 37 C.F.R 1.48(f) was mailed on June 3, 2019 because of an insufficient fee, in that the fee as set forth in 1.17(i) had not been submitted.

6. On June 11, 2019 a Corrected Notice of Allowance and Fees due was mailed along with a letter Withdrawing the previous Notice of Allowance.

7. The undersigned made numerous attempts to reach and left messages for Dianne Terry of the Application Assistance Unit at the phone number provided.

8. On June 17, 2019, the undersigned spoke to Ms. Debra Williams and was provided Ref # 1-640568626 with regard to the call. Ms. Williams confirmed that the request to correct Ms. Holmberg's name had been submitted and her oath accepted and it also was unclear to her why we had received the corrected NOA. Ms. Williams reached out to Ms Terry, but was also unable to reach her. The undersigned was advised to resubmit the inventor oaths and pay a $140 processing fee.

9. On September 11, 2019 Applicant submitted Issue Fee Part B, a $140 processing fee, copies of all the inventor's oaths and the $140 surcharge for late oath and also provided the PTO preauthorization to charge and additional fees due to deposit account # 505792. See the Electronic Patent Application Fee Transmittal and Electronic Acknowledgement Receipt, both dated September 11, 2019.

10. On September 23, 2019 Applicant received a Notice of Abandonment referring to the notice dated June 3, 2019, referred to above in paragraph 5 and that an "oath for Anne Holomberg" was needed.

11. A docketing error occurred and the Notice of Abandonment was not processed.

12. The entire delay in filing the required documents from the due date for the same until the filing of a grantable petition pursuant to 37 CFR 1.137(b) was unintentional.

13. Although Applicant is of the belief that the Notice of Abandonment is in error and not the fault of Applicant, the petition fee has been submitted and the Commissioner is hereby authorized to charge Applicant's Deposit Account No. 505792 if additional fees are due in connection with this response, any fees due, or credit any overpayment, required to make this request timely and acceptable to the Office.

14. I further declare that all statements herein are of my own knowledge and that all statements made on information and belief are believed to be true; and further that willfull false statements and the like so made are punishable by fine or imprisonment, or both, under §1001 of Title 18 of the United States Code and that such willfull false statements may jeopardize the validity of the present application or any patent issuing therefrom.

Corinne R. Gorski

June 18 2020
Date

Sandvik Intellectual Property
3200 Highlands Parkway SE
#200
Smyrna, GA 30082
Tel. 703-505-4761

UNITED STATES PATENT AND TRADEMARK OFFICE

UNITED STATES DEPARTMENT OF COMMERCE
United States Patent and Trademark Office
Address: COMMISSIONER FOR PATENTS
P.O. Box 1450
Alexandria, Virginia 22313-1450
www.uspto.gov

APPLICATION NO.	FILING DATE	FIRST NAMED INVENTOR	ATTORNEY DOCKET NO.	CONFIRMATION NO.
15/035,774	05/11/2016	Axel BERGMAN	SC 14208WOUS	3999

78686 7590 08/24/2020

Sandvik Intellectual Property
3200 Highlands Parkway SE
#200
Smyrna, GA 30082

EXAMINER
FRANCIS, FAYE

ART UNIT	PAPER NUMBER
3725	

NOTIFICATION DATE	DELIVERY MODE
08/24/2020	ELECTRONIC

Please find below and/or attached an Office communication concerning this application or proceeding.

The time period for reply, if any, is set in the attached communication.

Notice of the Office communication was sent electronically on above-indicated "Notification Date" to the following e-mail address(es):

corinne.gorski@sandvik.com
patents@sandvik.com

UNITED STATES PATENT AND TRADEMARK OFFICE

Commissioner for Patents
United States Patent and Trademark Office
P.O. Box 1450
Alexandria, VA 22313-1450
www.uspto.gov

In re Application of	:	
Axel Bergman, et al.	:	
Application No. 15/035,774	:	ON PETITION
Filed: May 11, 2016	:	
Attorney Docket No. SC 14208WOUS	:	

This is a decision on the petition under the unintentional provisions of 37 CFR 1.137(a), filed June 18, 2020, to revive the above-identified application.

The petition is **DISMISSED**.

Any request for reconsideration of this decision must be submitted within TWO (2) MONTHS from the mail date of this decision. Extensions of time under 37 CFR 1.136(a) are permitted. The reconsideration request should include a cover letter entitled "Renewed Petition under 37 CFR 1.137(a)." This is **not** a final agency action within the meaning of 5 U.S.C. § 704.

The application became abandoned on September 12, 2019, for failure to timely file the inventors' oath or declaration or substitute statement no later than the date on which the issue fee is paid. A Notice of Abandonment was mailed on September 23, 2019.

A grantable petition under 37 CFR 1.137(a) must be accompanied by: (1) the required reply, unless previously filed; (2) the petition fee as set forth in 37 CFR 1.17(m); (3) a statement that the entire delay in filing the required reply from the due date for the reply until the filing of a grantable petition pursuant to 37 CFR 1.137(a) was unintentional; and (4) any terminal disclaimer (and fee as set forth in 37 CFR 1.20(d)) required by 37 CFR 1.137(d). Where there is a question as to whether either the abandonment or the delay in filing a petition under 37 CFR 1.137 was unintentional, the Director may require additional information. See MPEP 711.03(c)(II)(C) and (D).

The petition does not comply with requirement (1). A review of the record indicates the request under 37 CFR 1.48 was filed on June 03, 2019 but was not entered because the fee was missing. The Petition to Revive filed on June 18, 2020, included an executed Oath/Declaration for Inventor Anne **HOLMBERG** but Office records do not reflect an inventor by that name.

37 CFR 1.312 states, no amendment may be made as a matter of right in an application after the mailing of the notice of allowance. Any amendment filed pursuant to this section must be filed before or with the payment of the issue fee, and may be entered on the recommendation of the primary examiner, approved by the Director, without withdrawing the application from issue.

Since 37 CFR 1.312 prohibits amendments to the disclosure after the payment of an issue fee, in order for the amendments to be accepted as part of the required reply, **a renewed petition under 37 CFR 1.137(a) must include a petition to withdraw this application from issue under the provisions of 37 CFR 1.313(c)(2), a Request for Continued Examination under 37 CFR 1.114, and the required fees.**

The renewed petition under 37 CFR 1.137(a) is not required to be accompanied by a petition fee under 37 CFR 1.17(m).

Further correspondence with respect to this matter should be delivered through one of the following mediums:

By mail:	Mail Stop PETITIONS Commissioner for Patents Post Office Box 1450 Alexandria, VA 22313-1450
By hand:	Customer Service Window Mail Stop Petitions Randolph Building 401 Dulany Street Alexandria, VA 22314
By fax:	(571) 273-8300 ATTN: Office of Petitions
By internet:	EFS-Web[1]

Any questions concerning this matter may be directed to Schene Gray at (571) 272-2581 or in her absence the undersigned at (571) 272-3222.

/KENYA A THORNTON MCLAUGHLIN/
Attorney Advisor, OPET

---

[1] www.uspto.gov/ebc/efs_help.html (for help using EFS-Web call the Patent Electronic Business Center at (866) 217-9197)

PTO/SB/140 (11-10)
Approved for use through xx/xx/201x. OMB 0651-00xx
U.S. Patent and Trademark Office; U. S. DEPARTMENT OF COMMERCE
Under the Paperwork Reduction Act of 1995, no persons are required to respond to a collection of information unless it displays a valid OMB control number.

PETITION TO WITHDRAW AN APPLICATION FROM ISSUE AFTER PAYMENT OF THE ISSUE FEE UNDER 37 CFR 1.313(c)(2)

First named inventor: Axel BERGMAN

Application No.: 15/035,774 Art Unit: 3725

Filed: May 11, 2016 Examiner: Faye Francis

Title: GYRATORY CRUSHER MAIN SHAFT AND ASSEMBLY

Attention: Office of Petitions

An application may be withdrawn from issue for further action upon petition by the applicant. To request that the Office withdraw an application from issue, applicant must file a petition under this section including the fee set forth in § 1.17(h) and a showing of good and sufficient reasons why withdrawal of the application from issue is necessary.

APPLICANT HEREBY PETITIONS TO WITHDRAW THIS APPLICATION FROM ISSUE UNDER 37 CFR 1.313(c).

A grantable petition requires the following items:

(1) Petition fee; and

(2) One of the following reasons:

(a) Unpatentability of one or more claims, which must be accompanied by an unequivocal statement that one or more claims are unpatentable, an amendment to such claim or claims, and an explanation as to how the amendment causes such claim or claims to be patentable;

(b) Consideration of a request for continued examination in compliance with § 1.114 (for a utility or plant application only); or

(c) Express abandonment of the application. Such express abandonment may be in favor of a continuing application, but not a CPA under 37 CFR 1.53(d).

1. Petition Fee

☒ $ 140.00 (37 CFR 1.17(h)).

2. Reason for withdrawal from issue

☐ One or more claims are unpatentable

☐ Amendment and explanation attached

☒ Consideration of a request for continued examination (RCE)

☒ RCE request attached
☐ RCE fee attached
☐ RCE submission attached

☐ Applicant hereby expressly abandons the instant application (any attorney/agent signing for this reason must have been given power of attorney)

THIS PORTION MUST BE COMPLETED BY THE SIGNATORY OR SIGNATORIES

I certify, in accordance with 37 CFR 1.4(d)(4) that I am:

○ An attorney or agent registered to practice before the Patent and Trademark Office who has been given power of attorney in this application

☒ An attorney or agent registered to practice before the Patent and Trademark Office

○ A sole inventor

○ A joint inventor; I certify that I am authorized to sign this submission on behalf of all of the inventors

○ A joint inventor; all of whom are signing this e-petition

○ The assignee of record of the entire interest that has properly made itself of record pursuant to 37 CFR 3.71.

/Corinne R. Gorski/	October 22, 2020
Signature	Date
Corinne R. Gorski	34,339
Typed or printed name	Registration Number, if applicable

This collection of information is required by 35 U.S.C. §§ 131 and 132, 37 CFR 1.313(c), and 37 CFR 1.17(h). The information is required to obtain or retain a benefit by the public which is to file (and by the USPTO to process) an application. Confidentiality is governed by 35 U.S.C. § 122 and 37 CFR 1.11 and 1.14. This collection is estimated to take 1 hour to complete, including gathering, preparing, and submitting the completed form to the USPTO. Time will vary depending upon the individual case. Any comments on the amount of time you require to complete this form and/or suggestions for reducing this burden, should be sent to the Chief Information Officer, U.S. Patent and Trademark Office, U.S. Department of Commerce, P.O. Box 1450, Alexandria, VA 22313-1450.

If you need assistance in completing the form, call 1-800-PTO-9199 and select option 2.

Privacy Act Statement

The Privacy Act of 1974 (P.L. 93-579) requires that you be given certain information in connection with your submission of the attached form related to a patent application or patent. Accordingly, pursuant to the requirements of the Act, please be advised that: (1) the general authority for the collection of this information is 35 U.S.C. § 2(b)(2); (2) furnishing of the information solicited is voluntary; and (3) the principal purpose for which the information is used by the U.S. Patent and Trademark Office is to process and/or examine your submission related to a patent application or patent. If you do not furnish the requested information, the U.S. Patent and Trademark Office may not be able to process and/or examine your submission, which may result in termination of proceedings or abandonment of the application or expiration of the patent.

The information provided by you in this form will be subject to the following routine uses:

1. The information on this form will be treated confidentially to the extent allowed under the Freedom of Information Act (5 U.S.C. § 552) and the Privacy Act (5 U.S.C. § 552a). Records from this system of records may be disclosed to the Department of Justice to determine whether disclosure of these records is required by the Freedom of Information Act.
2. A record from this system of records may be disclosed, as a routine use, in the course of presenting evidence to a court, magistrate, or administrative tribunal, including disclosures to opposing counsel in the course of settlement negotiations.
3. A record in this system of records may be disclosed, as a routine use, to a Member of Congress submitting a request involving an individual, to whom the record pertains, when the individual has requested assistance from the Member with respect to the subject matter of the record.
4. A record in this system of records may be disclosed, as a routine use, to a contractor of the Agency having need for the information in order to perform a contract. Recipients of information shall be required to comply with the requirements of the Privacy Act of 1974, as amended, pursuant to 5 U.S.C. § 552a(m).
5. A record related to an International Application filed under the Patent Cooperation Treaty in this system of records may be disclosed, as a routine use, to the International Bureau of the World Intellectual Property Organization, pursuant to the Patent Cooperation Treaty.
6. A record in this system of records may be disclosed, as a routine use, to another federal agency for purposes of National Security review (35 U.S.C. § 181) and for review pursuant to the Atomic Energy Act (42 U.S.C. § 218(c)).
7. A record from this system of records may be disclosed, as a routine use, to the Administrator, General Services, or his/her designee, during an inspection of records conducted by GSA as part of that agency's responsibility to recommend improvements in records management practices and programs, under authority of 44 U.S.C. §§ 2904 and 2906. Such disclosure shall be made in accordance with the GSA regulations governing inspection of records for this purpose, and any other relevant (*i.e.*, GSA or Commerce) directive. Such disclosure shall not be used to make determinations about individuals.
8. A record from this system of records may be disclosed, as a routine use, to the public after either publication of the application pursuant to 35 U.S.C. § 122(b) or issuance of a patent pursuant to 35 U.S.C. § 151. Further, a record may be disclosed, subject to the limitations of 37 CFR 1.14, as a routine use, to the public if the record was filed in an application which became abandoned or in which the proceedings were terminated and which application is referenced by either a published application, an application open to public inspection or an issued patent.
9. A record from this system of records may be disclosed, as a routine use, to a Federal, State, or local law enforcement agency, if the USPTO becomes aware of a violation or potential violation of law or regulation.

Doc code: RCEX
Doc description: Request for Continued Examination (RCE)

PTO/SB/30EFS (02-18)
Approved for use through 11/30/2020. OMB 0651-0031
U.S. Patent and Trademark Office; U.S. DEPARTMENT OF COMMERCE
Under the Paperwork Reduction Act of 1995, no persons are required to respond to a collection of information unless it contains a valid OMB control number.

REQUEST FOR CONTINUED EXAMINATION(RCE)TRANSMITTAL
(Submitted Only via EFS-Web)

Application Number	15035774	Filing Date	2016-05-11	Docket Number (if applicable)	SC 14208WOUS	Art Unit	3725
First Named Inventor	Axel BERGMAN			Examiner Name	FAYE FRANCIS		

This is a Request for Continued Examination (RCE) under 37 CFR 1.114 of the above-identified application.
Request for Continued Examination (RCE) practice under 37 CFR 1.114 does not apply to any utility or plant application filed prior to June 8, 1995, or to any design application. The Instruction Sheet for this form is located at WWW.USPTO.GOV

SUBMISSION REQUIRED UNDER 37 CFR 1.114

Note: If the RCE is proper, any previously filed unentered amendments and amendments enclosed with the RCE will be entered in the order in which they were filed unless applicant instructs otherwise. If applicant does not wish to have any previously filed unentered amendment(s) entered, applicant must request non-entry of such amendment(s).

☐ Previously submitted. If a final Office action is outstanding, any amendments filed after the final Office action may be considered as a submission even if this box is not checked.

- ☐ Consider the arguments in the Appeal Brief or Reply Brief previously filed on _____
- ☐ Other _____

☒ Enclosed

- ☐ Amendment/Reply
- ☐ Information Disclosure Statement (IDS)
- ☐ Affidavit(s)/ Declaration(s)
- ☒ Other Renewed Petition Under 37 CFR 1.137(a); Petition to Withdraw From Issue under 37 CFR 1.313(c)(2)

MISCELLANEOUS

☐ Suspension of action on the above-identified application is requested under 37 CFR 1.103(c) for a period of months _____ (Period of suspension shall not exceed 3 months; Fee under 37 CFR 1.17(i) required)

☐ Other _____

FEES

☒ **The RCE fee under 37 CFR 1.17(e) is required by 37 CFR 1.114 when the RCE is filed.**
The Director is hereby authorized to charge any underpayment of fees, or credit any overpayments, to Deposit Account No 505792

SIGNATURE OF APPLICANT, ATTORNEY, OR AGENT REQUIRED

☒ Patent Practitioner Signature

Applicant Signature

PTO/SB/30EFS (02-18)
Approved for use through 11/30/2020. OMB 0651-0031
U.S. Patent and Trademark Office; U.S. DEPARTMENT OF COMMERCE
Under the Paperwork Reduction Act of 1995, no persons are required to respond to a collection of information unless it contains a valid OMB control number.

Signature of Registered U.S. Patent Practitioner			
Signature	/Corinne R. Gorski/	Date (YYYY-MM-DD)	2020-10-22
Name	Corinne R. Gorski	Registration Number	34339

This collection of information is required by 37 CFR 1.114. The information is required to obtain or retain a benefit by the public which is to file (and by the USPTO to process) an application. Confidentiality is governed by 35 U.S.C. 122 and 37 CFR 1.11 and 1.14. This collection is estimated to take 12 minutes to complete, including gathering, preparing, and submitting the completed application form to the USPTO. Time will vary depending upon the individual case. Any comments on the amount of time you require to complete this form and/or suggestions for reducing this burden, should be sent to the Chief Information Officer, U.S. Patent and Trademark Office, U.S. Department of Commerce, P.O. Box 1450, Alexandria, VA 22313-1450.

If you need assistance in completing the form, call 1-800-PTO-9199 and select option 2.

Privacy Act Statement

The Privacy Act of 1974 (P.L. 93-579) requires that you be given certain information in connection with your submission of the attached form related to a patent application or patent. Accordingly, pursuant to the requirements of the Act, please be advised that: (1) the general authority for the collection of this information is 35 U.S.C. 2(b)(2); (2) furnishing of the information solicited is voluntary; and (3) the principal purpose for which the information is used by the U.S. Patent and Trademark Office is to process and/or examine your submission related to a patent application or patent. If you do not furnish the requested information, the U.S. Patent and Trademark Office may not be able to process and/or examine your submission, which may result in termination of proceedings or abandonment of the application or expiration of the patent.

The information provided by you in this form will be subject to the following routine uses:

1. The information on this form will be treated confidentially to the extent allowed under the Freedom of Information Act (5 U.S.C. 552) and the Privacy Act (5 U.S.C. 552a). Records from this system of records may be disclosed to the Department of Justice to determine whether the Freedom of Information Act requires disclosure of these records.

2. A record from this system of records may be disclosed, as a routine use, in the course of presenting evidence to a court, magistrate, or administrative tribunal, including disclosures to opposing counsel in the course of settlement negotiations.

3. A record in this system of records may be disclosed, as a routine use, to a Member of Congress submitting a request involving an individual, to whom the record pertains, when the individual has requested assistance from the Member with respect to the subject matter of the record.

4. A record in this system of records may be disclosed, as a routine use, to a contractor of the Agency having need for the information in order to perform a contract. Recipients of information shall be required to comply with the requirements of the Privacy Act of 1974, as amended, pursuant to 5 U.S.C. 552a(m).

5. A record related to an International Application filed under the Patent Cooperation Treaty in this system of records may be disclosed, as a routine use, to the International Bureau of the World Intellectual Property Organization, pursuant to the Patent Cooperation Treaty.

6. A record in this system of records may be disclosed, as a routine use, to another federal agency for purposes of National Security review (35 U.S.C. 181) and for review pursuant to the Atomic Energy Act (42 U.S.C. 218(c)).

7. A record from this system of records may be disclosed, as a routine use, to the Administrator, General Services, or his/her designee, during an inspection of records conducted by GSA as part of that agency's responsibility to recommend improvements in records management practices and programs, under authority of 44 U.S.C. 2904 and 2906. Such disclosure shall be made in accordance with the GSA regulations governing inspection of records for this purpose, and any other relevant (i.e., GSA or Commerce) directive. Such disclosure shall not be used to make determinations about individuals.

8. A record from this system of records may be disclosed, as a routine use, to the public after either publication of the application pursuant to 35 U.S.C. 122(b) or issuance of a patent pursuant to 35 U.S.C. 151. Further, a record may be disclosed, subject to the limitations of 37 CFR 1.14, as a routine use, to the public if the record was filed in an application which became abandoned or in which the proceedings were terminated and which application is referenced by either a published application, an application open to public inspections or an issued patent.

9. A record from this system of records may be disclosed, as a routine use, to a Federal, State, or local law enforcement agency, if the USPTO becomes aware of a violation or potential violation of law or regulation.

Electronic Patent Application Fee Transmittal

Application Number:	15035774
Filing Date:	11-May-2016
Title of Invention:	GYRATORY CRUSHER MAIN SHAFT AND ASSEMBLY
First Named Inventor/Applicant Name:	Axel BERGMAN
Filer:	Corinne R. Gorski
Attorney Docket Number:	SC 14208WOUS

Filed as Large Entity

Filing Fees for U.S. National Stage under 35 USC 371

Description	Fee Code	Quantity	Amount	Sub-Total in USD($)
Basic Filing:				
Pages:				
Claims:				
Miscellaneous-Filing:				
Petition:				
PETITION FEE- 37 CFR 1.17(H) (GROUP III)	1464	1	140	140
Patent-Appeals-and-Interference:				
Post-Allowance-and-Post-Issuance:				

Description	Fee Code	Quantity	Amount	Sub-Total in USD($)
Extension-of-Time:				
Miscellaneous:				
RCE- 1ST REQUEST	1801	1	1360	1360
		Total in USD ($)		**1500**

Electronic Acknowledgement Receipt

EFS ID:	40918043
Application Number:	15035774
International Application Number:	
Confirmation Number:	3999
Title of Invention:	GYRATORY CRUSHER MAIN SHAFT AND ASSEMBLY
First Named Inventor/Applicant Name:	Axel BERGMAN
Customer Number:	78686
Filer:	Corinne R. Gorski
Filer Authorized By:	
Attorney Docket Number:	SC 14208WOUS
Receipt Date:	22-OCT-2020
Filing Date:	11-MAY-2016
Time Stamp:	14:24:03
Application Type:	U.S. National Stage under 35 USC 371

Payment information:

Submitted with Payment	yes
Payment Type	DA
Payment was successfully received in RAM	$1500
RAM confirmation Number	E20200LE24366306
Deposit Account	505792
Authorized User	Corinne Gorski

The Director of the USPTO is hereby authorized to charge indicated fees and credit any overpayment as follows:

37 CFR 1.17 (Patent application and reexamination processing fees)

37 CFR 1.19 (Document supply fees)

37 CFR 1.20 (Post Issuance fees)

37 CFR 1.21 (Miscellaneous fees and charges)

File Listing:

Document Number	Document Description	File Name	File Size(Bytes)/ Message Digest	Multi Part /.zip	Pages (if appl.)
1	Request for Continued Examination (RCE)	14208WOUSRCEsb0030efs.pdf	1351547 4c015b7650ed5b8bb14a7d2dde7b79c1b1c1a900	no	3
Warnings:					
Information:					
2	Petition to Withdraw from Issue	14208WOUSPetitiontoWithdrawFromIssue37CFE1_313C2.pdf	142556 8744af2dd284388d572307311e97c8ad8ae489bd	no	3
Warnings:					
Information:					
3	Petition for review by the Office of Petitions	14208WOUSRenewedPetition1137a.pdf	1936436 b22cfc011636064ec29f76d770da77a6c73e023f	no	19
Warnings:					
The PDF file has been signed with a digital signature and the legal effect of the document will be based on the contents of the file not the digital signature.					
Information:					
4	Fee Worksheet (SB06)	fee-info.pdf	32043 2e7ed80922d34293bde0a6fdd7364ed2f4a6e221	no	2
Warnings:					
Information:					
		Total Files Size (in bytes):	3462582		

This Acknowledgement Receipt evidences receipt on the noted date by the USPTO of the indicated documents, characterized by the applicant, and including page counts, where applicable. It serves as evidence of receipt similar to a Post Card, as described in MPEP 503.

New Applications Under 35 U.S.C. 111

If a new application is being filed and the application includes the necessary components for a filing date (see 37 CFR 1.53(b)-(d) and MPEP 506), a Filing Receipt (37 CFR 1.54) will be issued in due course and the date shown on this Acknowledgement Receipt will establish the filing date of the application.

National Stage of an International Application under 35 U.S.C. 371

If a timely submission to enter the national stage of an international application is compliant with the conditions of 35 U.S.C. 371 and other applicable requirements a Form PCT/DO/EO/903 indicating acceptance of the application as a national stage submission under 35 U.S.C. 371 will be issued in addition to the Filing Receipt, in due course.

New International Application Filed with the USPTO as a Receiving Office

If a new international application is being filed and the international application includes the necessary components for an international filing date (see PCT Article 11 and MPEP 1810), a Notification of the International Application Number and of the International Filing Date (Form PCT/RO/105) will be issued in due course, subject to prescriptions concerning national security, and the date shown on this Acknowledgement Receipt will establish the international filing date of the application.

Patent
Attorney Docket No. SC 14208WOUS
Date: October 22, 2020

IN THE UNITED STATES PATENT AND TRADEMARK OFFICE

In re Patent Application of	)	
	)	
Axel BERGMAN et al	)	Confirmation No.: 3999
	)	
Application No.: 15/035,774	)	
	)	Examiner: Faye Francis
	)	
Filed: May 11, 2016	)	
	)	Group Art Unit: 3725
For: GYRATORY CRUSHER MAIN SHAFT AND ASSEMBLY	)	

MAIL STOP PETITIONS
Commissioner for Patents
P.O. Box 1450
Alexandria, VA 22313-1450

RENEWED PETITION UNDER 37 C.F.R. §1.137(a)

Sir:

The above-identified application became abandoned for failure to file a timely and proper reply to a notice or action by the United States Patent and Trademark Office.

Further to the Petition filed June 18, 2020, submitted herewith is a copy A Request for the Correction to Inventor Name under 37 CFR 1.48(f) that was filed on July 13, 2016 along with a corrected ADS indicating the correct spelling of Ms. Homberg's last name and a signed oath/declaration by Anne "Holmberg" and Electronic Patent Application Fee Transmittal and Electronic Acknowledgement Receipt EFS ID 26340281.

APPLICANT HEREBY PETITIONS FOR REVIVAL OF THIS APPLICATION.

The undiscounted petition fee of $2000.00 according to 37 CFR 1.17(m) has been previously submitted.

A Reply in the form of a Request for Continued Examination and the required fee accompanies this Renewed Petition.

The issue fee and publication fee of $ 1000.00 has been paid previously on May 28, 2019.

Since this utility/plant application was filed on or after June 8, 1995, no terminal disclaimer is required.

The entire delay in filing the required reply from the due date for the required reply until the filing of a grantable petition under 37 CFR 1.137(a) was unintentional.

/Corinne R. Gorski/ October 22, 2020

Corinne R. Gorski Date

Sandvik Intellectual Property
3200 Highlands Parkway SE
#200
Smyrna, GA 30082
Tel. 703-505-4761

PTO/AIA/14 (03-13)
Approved for use through 01/31/2014. OMB 0651-0032
U.S. Patent and Trademark Office; U.S. DEPARTMENT OF COMMERCE
Under the Paperwork Reduction Act of 1995, no persons are required to respond to a collection of information unless it contains a valid OMB control number.

Application Data Sheet 37 CFR 1.76	Attorney Docket Number	SC 14208WOUS
	Application Number	
Title of Invention	GYRATORY CRUSHER MAIN SHAFT AND ASSEMBLY	

The application data sheet is part of the provisional or nonprovisional application for which it is being submitted. The following form contains the bibliographic data arranged in a format specified by the United States Patent and Trademark Office as outlined in 37 CFR 1.76.
This document may be completed electronically and submitted to the Office in electronic format using the Electronic Filing System (EFS) or the document may be printed and included in a paper filed application.

Secrecy Order 37 CFR 5.2

☐ Portions or all of the application associated with this Application Data Sheet may fall under a Secrecy Order pursuant to 37 CFR 5.2 (Paper filers only. Applications that fall under Secrecy Order may not be filed electronically.)

Inventor Information:

Inventor 1 Remove

Legal Name

Prefix	Given Name	Middle Name	Family Name	Suffix
	Axel		BERGMAN	

Residence Information (Select One) ○ US Residency ◉ Non US Residency ○ Active US Military Service

City	Malmo	Country of Residence i	SE

Mailing Address of Inventor:

Address 1	Falsterbogatan 20
Address 2	S-214 36

City	Malmo	State/Province	
Postal Code		**Country** i	SE

Inventor 2 Remove

Legal Name

Prefix	Given Name	Middle Name	Family Name	Suffix
	Mikael	M	LARSSON	

Residence Information (Select One) ○ US Residency ◉ Non US Residency ○ Active US Military Service

City	Eslov	Country of Residence i	SE

Mailing Address of Inventor:

Address 1	Ostarpsvagen 11
Address 2	S-24133

City	Eslov	State/Province	
Postal Code		**Country** i	SE

Inventor 3 Remove

Legal Name

PTO/AIA/14 (03-13)
Approved for use through 01/31/2014. OMB 0651-0032
U.S. Patent and Trademark Office; U.S. DEPARTMENT OF COMMERCE
Under the Paperwork Reduction Act of 1995, no persons are required to respond to a collection of information unless it contains a valid OMB control number.

Application Data Sheet 37 CFR 1.76	Attorney Docket Number	SC 14208WOUS
	Application Number	
Title of Invention	GYRATORY CRUSHER MAIN SHAFT AND ASSEMBLY	

Prefix	Given Name	Middle Name	Family Name	Suffix
	Patric		MALMQVIST	

Residence Information (Select One) ○ US Residency ◉ Non US Residency ○ Active US Military Service

City	Svedala	Country of Residence i	SE

Mailing Address of Inventor:

Address 1	Nilsakessongatan 31		
Address 2	S-23333		
City	Svedala	State/Province	
Postal Code		Country i	SE

Inventor 4 Remove

Legal Name

Prefix	Given Name	Middle Name	Family Name	Suffix
	Anders		HALLBERG	

Residence Information (Select One) ○ US Residency ◉ Non US Residency ○ Active US Military Service

City	Sodra Sandby	Country of Residence i	SE

Mailing Address of Inventor:

Address 1	Stubbvagen 26		
Address 2	S-247 33		
City	Sodra Sandby	State/Province	
Postal Code		Country i	SE

Inventor 5 Remove

Legal Name

Prefix	Given Name	Middle Name	Family Name	Suffix
	Matts-Ake		NILSSON	

Residence Information (Select One) ○ US Residency ◉ Non US Residency ○ Active US Military Service

City	Gards Kopinge	Country of Residence i	SE

Mailing Address of Inventor:

Address 1	Ninas vag 5		
Address 2	S-291 77		
City	Gards Kopinge	State/Province	
Postal Code		Country i	SE

PTO/AIA/14 (03-13)
Approved for use through 01/31/2014. OMB 0651-0032
U.S. Patent and Trademark Office; U.S. DEPARTMENT OF COMMERCE
Under the Paperwork Reduction Act of 1995, no persons are required to respond to a collection of information unless it contains a valid OMB control number.

Application Data Sheet 37 CFR 1.76	Attorney Docket Number	SC 14208WOUS
	Application Number	
Title of Invention	GYRATORY CRUSHER MAIN SHAFT AND ASSEMBLY	

Inventor 6 Remove

Legal Name

Prefix	Given Name	Middle Name	Family Name	Suffix
	Fredrik		ERIKSSON	

Residence Information (Select One) ○ US Residency ◉ Non US Residency ○ Active US Military Service

City	Malmo	Country of Residence [i]	SE

Mailing Address of Inventor:

Address 1	Gronegatan 34		
Address 2	S-21127		
City	Malmo	State/Province	
Postal Code		Country [i]	SE

Inventor 7 Remove

Legal Name

Prefix	Given Name	Middle Name	Family Name	Suffix
	Bengt-Arne		ERIKSSON	

Residence Information (Select One) ○ US Residency ◉ Non US Residency ○ Active US Military Service

City	Svedala	Country of Residence [i]	SE

Mailing Address of Inventor:

Address 1	Sveagatan 4		
Address 2	S-233 33		
City	Svedala	State/Province	
Postal Code		Country [i]	SE

Inventor 8 Remove

Legal Name

Prefix	Given Name	Middle Name	Family Name	Suffix
	Anne		~~HOLMBERG~~ HOLMBERG	

Residence Information (Select One) ○ US Residency ◉ Non US Residency ○ Active US Military Service

City	Loddekopinge	Country of Residence [i]	SE

Mailing Address of Inventor:

Address 1	Bagerivagen 22
Address 2	S-246 30

PTO/AIA/14 (03-13)
Approved for use through 01/31/2014. OMB 0651-0032
U.S. Patent and Trademark Office; U.S. DEPARTMENT OF COMMERCE
Under the Paperwork Reduction Act of 1995, no persons are required to respond to a collection of information unless it contains a valid OMB control number.

Application Data Sheet 37 CFR 1.76	Attorney Docket Number	SC 14208WOUS
	Application Number	
Title of Invention	GYRATORY CRUSHER MAIN SHAFT AND ASSEMBLY	

City	Loddekopinge	State/Province	
Postal Code		Country i	SE

All Inventors Must Be Listed - Additional Inventor Information blocks may be generated within this form by selecting the **Add** button. Add

Correspondence Information:

Enter either Customer Number or complete the Correspondence Information section below.
For further information see 37 CFR 1.33(a).

☐ An Address is being provided for the correspondence Information of this application.

Customer Number	78686	
Email Address		Add Email

Application Information:

Title of the Invention	GYRATORY CRUSHER MAIN SHAFT AND ASSEMBLY		
Attorney Docket Number	SC 14208WOUS	Small Entity Status Claimed	☐
Application Type	Nonprovisional		
Subject Matter	Utility		
Total Number of Drawing Sheets (if any)		Suggested Figure for Publication (if any)	

Publication Information:

☐ Request Early Publication (Fee required at time of Request 37 CFR 1.219)

☐ **Request Not to Publish.** I hereby request that the attached application not be published under 35 U.S.C. 122(b) and certify that the invention disclosed in the attached application **has not and will not** be the subject of an application filed in another country, or under a multilateral international agreement, that requires publication at eighteen months after filing.

Representative Information:

Representative information should be provided for all practitioners having a power of attorney in the application. Providing this information in the Application Data Sheet does not constitute a power of attorney in the application (see 37 CFR 1.32).
Either enter Customer Number or complete the Representative Name section below. If both sections are completed the customer Number will be used for the Representative Information during processing.

Please Select One:	◉ Customer Number	○ US Patent Practitioner	○ Limited Recognition (37 CFR 11.9)
Customer Number	78686		

PTO/AIA/14 (03-13)
Approved for use through 01/31/2014. OMB 0651-0032
U.S. Patent and Trademark Office; U.S. DEPARTMENT OF COMMERCE
Under the Paperwork Reduction Act of 1995, no persons are required to respond to a collection of information unless it contains a valid OMB control number.

Application Data Sheet 37 CFR 1.76	Attorney Docket Number	SC 14208WOUS
	Application Number	
Title of Invention	GYRATORY CRUSHER MAIN SHAFT AND ASSEMBLY	

Domestic Benefit/National Stage Information:

This section allows for the applicant to either claim benefit under 35 U.S.C. 119(e), 120, 121, or 365(c) or indicate National Stage entry from a PCT application. Providing this information in the application data sheet constitutes the specific reference required by 35 U.S.C. 119(e) or 120, and 37 CFR 1.78.

Prior Application Status	Pending	Remove	
Application Number	Continuity Type	Prior Application Number	Filing Date (YYYY-MM-DD)
	a 371 of international	PCT/EP2014/060594	2014-05-23

Additional Domestic Benefit/National Stage Data may be generated within this form by selecting the **Add** button.

Foreign Priority Information:

This section allows for the applicant to claim priority to a foreign application. Providing this information in the application data sheet constitutes the claim for priority as required by 35 U.S.C. 119(b) and 37 CFR 1.55(d). When priority is claimed to a foreign application that is eligible for retrieval under the priority document exchange program (PDX)[i] the information will be used by the Office to automatically attempt retrieval pursuant to 37 CFR 1.55(h)(1) and (2). Under the PDX program, applicant bears the ultimate responsibility for ensuring that a copy of the foreign application is received by the Office from the participating foreign intellectual property office, or a certified copy of the foreign priority application is filed, within the time period specified in 37 CFR 1.55(g)(1).

Remo...

Application Number	Country[i]	Filing Date (YYYY-MM-DD)	Access Code[i] (if applicable)
13192402.9	EP	2013-11-12	

Additional Foreign Priority Data may be generated within this form by selecting the **Add** button.

Statement under 37 CFR 1.55 or 1.78 for AIA (First Inventor to File) Transition Applications

☐ This application (1) claims priority to or the benefit of an application filed before March 16, 2013 and (2) also contains, or contained at any time, a claim to a claimed invention that has an effective filing date on or after March 16, 2013.

Authorization to Permit Access:

☒ Authorization to Permit Access to the Instant Application by the Participating Offices

PTO/AIA/14 (03-13)
Approved for use through 01/31/2014. OMB 0651-0032
U.S. Patent and Trademark Office, U.S. DEPARTMENT OF COMMERCE
Under the Paperwork Reduction Act of 1995, no persons are required to respond to a collection of information unless it contains a valid OMB control number.

Application Data Sheet 37 CFR 1.76	Attorney Docket Number	SC 14208WOUS
	Application Number	
Title of Invention	GYRATORY CRUSHER MAIN SHAFT AND ASSEMBLY	

If checked, the undersigned hereby grants the USPTO authority to provide the European Patent Office (EPO), the Japan Patent Office (JPO), the Korean Intellectual Property Office (KIPO), the World Intellectual Property Office (WIPO), and any other intellectual property offices in which a foreign application claiming priority to the instant patent application is filed access to the instant patent application. See 37 CFR 1.14(c) and (h). This box should not be checked if the applicant does not wish the EPO, JPO, KIPO, WIPO, or other intellectual property office in which a foreign application claiming priority to the instant patent application is filed to have access to the instant patent application.

In accordance with 37 CFR 1.14(h)(3), access will be provided to a copy of the instant patent application with respect to: 1) the instant patent application-as-filed; 2) any foreign application to which the instant patent application claims priority under 35 U.S.C. 119(a)-(d) if a copy of the foreign application that satisfies the certified copy requirement of 37 CFR 1.55 has been filed in the instant patent application; and 3) any U.S. application-as-filed from which benefit is sought in the instant patent application.

In accordance with 37 CFR 1.14(c), access may be provided to information concerning the date o f filing this Authorization.

Applicant Information:

Providing assignment information in this section does not substitute for compliance with any requirement of part 3 of Title 37 of CFR to have an assignment recorded by the Office.

Applicant 1

If the applicant is the inventor (or the remaining joint inventor or inventors under 37 CFR 1.45), this section should not be completed. The information to be provided in this section is the name and address of the legal representative who is the applicant under 37 CFR 1.43; or the name and address of the assignee, person to whom the inventor is under an obligation to assign the invention, or person who otherwise shows sufficient proprietary interest in the matter who is the applicant under 37 CFR 1.46. If the applicant is an applicant under 37 CFR 1.46 (assignee, person to whom the inventor is obligated to assign, or person who otherwise shows sufficient proprietary interest) together with one or more joint inventors, then the joint inventor or inventors who are also the applicant should be identified in this section.

Clear

(●) Assignee	( ) Legal Representative under 35 U.S.C. 117	( ) Joint Inventor
( ) Person to whom the inventor is obligated to assign.	( ) Person who shows sufficient proprietary interest	

If applicant is the legal representative, indicate the authority to file the patent application, the inventor is:

Name of the Deceased or Legally Incapacitated Inventor :

If the Applicant is an Organization check here. ☒

Organization Name	SANDVIK INTELECTUAL PROPERTY AB

Mailing Address Information For Applicant:

Address 1	SE-811 81		
Address 2			
City	Sandviken	**State/Province**	
Country	SE	Postal Code	
Phone Number		Fax Number	

PTO/AIA/14 (03-13)
Approved for use through 01/31/2014. OMB 0651-0032
U.S. Patent and Trademark Office; U.S. DEPARTMENT OF COMMERCE
Under the Paperwork Reduction Act of 1995, no persons are required to respond to a collection of information unless it contains a valid OMB control number.

Application Data Sheet 37 CFR 1.76	Attorney Docket Number	SC 14208WOUS
	Application Number	
Title of Invention	GYRATORY CRUSHER MAIN SHAFT AND ASSEMBLY	

Email Address	

Additional Applicant Data may be generated within this form by selecting the Add button.

Non-Applicant Assignee Information:

Providing assignment information in this section does not subsitute for compliance with any requirement of part 3 of Title 37 of CFR to have an assignment recorded by the Office.

Assignee 1

Complete this section only if non-applicant assignee information is desired to be included on the patent application publication in accordance with 37 CFR 1.215(b). Do not include in this section an applicant under 37 CFR 1.46 (assignee, person to whom the inventor is obligated to assign, or person who otherwise shows sufficient proprietary interest), as the patent application publication will include the name of the applicant(s).

If the Assignee is an Organization check here. ☐

Prefix	**Given Name**	Middle Name	**Family Name**	Suffix

Mailing Address Information For Non-Applicant Assignee:

Address 1			
Address 2			
City		**State/Province**	
Country i		Postal Code	
Phone Number		Fax Number	
Email Address			

Additional Assignee Data may be generated within this form by selecting the Add button.

Signature:

NOTE: This form must be signed in accordance with 37 CFR 1.33. See 37 CFR 1.4 for signature requirements and certifications.

Signature	/Corinne Gorski/			Date (YYYY-MM-DD)	2016-05-11
First Name	Corinne	Last Name	Gorski	Registration Number	34339

Additional Signature may be generated within this form by selecting the Add button.

PTO/AIA/14 (03-13)
Approved for use through 01/31/2014. OMB 0651-0032
U.S. Patent and Trademark Office; U.S. DEPARTMENT OF COMMERCE
Under the Paperwork Reduction Act of 1995, no persons are required to respond to a collection of information unless it contains a valid OMB control number.

Application Data Sheet 37 CFR 1.76	Attorney Docket Number	SC 14208WOUS
	Application Number	
Title of Invention	GYRATORY CRUSHER MAIN SHAFT AND ASSEMBLY	

This collection of information is required by 37 CFR 1.76. The information is required to obtain or retain a benefit by the public which is to file (and by the USPTO to process) an application. Confidentiality is governed by 35 U.S.C. 122 and 37 CFR 1.14. This collection is estimated to take 23 minutes to complete, including gathering, preparing, and submitting the completed application data sheet form to the USPTO. Time will vary depending upon the individual case. Any comments on the amount of time you require to complete this form and/or suggestions for reducing this burden, should be sent to the Chief Information Officer, U.S. Patent and Trademark Office, U.S. Department of Commerce, P.O. Box 1450, Alexandria, VA 22313-1450. DO NOT SEND FEES OR COMPLETED FORMS TO THIS ADDRESS. **SEND TO: Commissioner for Patents, P.O. Box 1450, Alexandria, VA 22313-1450.**

Privacy Act Statement

The Privacy Act of 1974 (P.L. 93-579) requires that you be given certain information in connection with your submission of the attached form related to a patent application or patent. Accordingly, pursuant to the requirements of the Act, please be advised that: (1) the general authority for the collection of this information is 35 U.S.C. 2(b)(2); (2) furnishing of the information solicited is voluntary; and (3) the principal purpose for which the information is used by the U.S. Patent and Trademark Office is to process and/or examine your submission related to a patent application or patent. If you do not furnish the requested information, the U.S. Patent and Trademark Office may not be able to process and/or examine your submission, which may result in termination of proceedings or abandonment of the application or expiration of the patent.

The information provided by you in this form will be subject to the following routine uses:

1. The information on this form will be treated confidentially to the extent allowed under the Freedom of Information Act (5 U.S.C. 552) and the Privacy Act (5 U.S.C. 552a). Records from this system of records may be disclosed to the Department of Justice to determine whether the Freedom of Information Act requires disclosure of these records.

2. A record from this system of records may be disclosed, as a routine use, in the course of presenting evidence to a court, magistrate, or administrative tribunal, including disclosures to opposing counsel in the course of settlement negotiations.

3. A record in this system of records may be disclosed, as a routine use, to a Member of Congress submitting a request involving an individual, to whom the record pertains, when the individual has requested assistance from the Member with respect to the subject matter of the record.

4. A record in this system of records may be disclosed, as a routine use, to a contractor of the Agency having need for the information in order to perform a contract. Recipients of information shall be required to comply with the requirements of the Privacy Act of 1974, as amended, pursuant to 5 U.S.C. 552a(m).

5. A record related to an International Application filed under the Patent Cooperation Treaty in this system of records may be disclosed, as a routine use, to the International Bureau of the World Intellectual Property Organization, pursuant to the Patent Co o p eration Treaty.

6. A record in this system of records may be disclosed, as a routine use, to another federal agency for purposes of National Security review (35 U.S.C. 181) and for review pursuant to the Atomic Energy Act (42 U.S.C. 218(c)).

7. A record from this system of records may be disclosed, as a routine use, to the Administrator, General Services, or his/her designee, during an inspection of records conducted by GSA as part of that agency's responsibility to recommend improvements in records management practices and programs, under authority of 44 U.S.C. 2904 and 2906. Such disclosure shall be made in accordance with the GSA regulations governing inspection of records for this purpose, and any other relevant (i.e., GSA or Commerce) directive. Such disclosure shall not be used to make determinations about individuals.

8. A record from this system of records may be disclosed, as a routine use, to the public after either publication of the application pursuant to 35 U.S.C. 122(b) or issuance of a patent pursuant to 35 U.S.C. 151. Further, a record may be disclosed, subject to the limitations of 37 CFR 1.14, as a routine use, to the public if the record was filed in an application which became abandoned or in which the proceedings were terminated and which application is referenced by either a published application, an application open to public inspections or an issued patent.

9. A record from this system of records may be disclosed, as a routine use, to a Federal, State, or local law enforcement agency, if the USPTO becomes aware of a violation or potential violation of law or regulation.

PTO/AIA/01 (06-12)
Approved for use through 01/31/2014. OMB 0651-0032
U.S. Patent and Trademark Office; U.S. DEPARTMENT OF COMMERCE
Under the Paperwork Reduction Act of 1995, no persons are required to respond to a collection of information unless it displays a valid OMB control number.

DECLARATION (37 CFR 1.63) FOR UTILITY OR DESIGN APPLICATION USING AN APPLICATION DATA SHEET (37 CFR 1.76)

Title of Invention	GYRATORY CRUSHER MAIN SHAFT AND ASSEMBLY

As the below named inventor, I hereby declare that:

This declaration is directed to:

- [x] The attached application, or
- [ ] United States application or PCT international application number _____ filed on _____.

The above-identified application was made or authorized to be made by me.

I believe that I am the original inventor or an original joint inventor of a claimed invention in the application.

I hereby acknowledge that any willful false statement made in this declaration is punishable under 18 U.S.C. 1001 by fine or imprisonment of not more than five (5) years, or both.

WARNING:

Petitioner/applicant is cautioned to avoid submitting personal information in documents filed in a patent application that may contribute to identity theft. Personal information such as social security numbers, bank account numbers, or credit card numbers (other than a check or credit card authorization form PTO-2038 submitted for payment purposes) is never required by the USPTO to support a petition or an application. If this type of personal information is included in documents submitted to the USPTO, petitioners/applicants should consider redacting such personal information from the documents before submitting them to the USPTO. Petitioner/applicant is advised that the record of a patent application is available to the public after publication of the application (unless a non-publication request in compliance with 37 CFR 1.213(a) is made in the application) or issuance of a patent. Furthermore, the record from an abandoned application may also be available to the public if the application is referenced in a published application or an issued patent (see 37 CFR 1.14). Checks and credit card authorization forms PTO-2038 submitted for payment purposes are not retained in the application file and therefore are not publicly available.

LEGAL NAME OF INVENTOR

Inventor: HOLMBERG, Anne Date (Optional): 2016-05-16

Signature: Anne Holmberg

Note: An application data sheet (PTO/AIA/14 or equivalent), including naming the entire inventive entity, must accompany this form. Use an additional PTO/SB/AIA01 form for each additional inventor.

This collection of information is required by 35 U.S.C. 115 and 37 CFR 1.63. The information is required to obtain or retain a benefit by the public which is to file (and by the USPTO to process) an application. Confidentiality is governed by 35 U.S.C. 122 and 37 CFR 1.11 and 1.14. This collection is estimated to take 1 minute to complete, including gathering, preparing, and submitting the completed application form to the USPTO. Time will vary depending upon the individual case. Any comments on the amount of time you require to complete this form and/or suggestions for reducing this burden, should be sent to the Chief Information Officer, U.S. Patent and Trademark Office, U.S. Department of Commerce, P.O. Box 1450, Alexandria, VA 22313-1450. DO NOT SEND FEES OR COMPLETED FORMS TO THIS ADDRESS. **SEND TO: Commissioner for Patents, P.O. Box 1450, Alexandria, VA 22313-1450.**

If you need assistance in completing the form, call 1-800-PTO-9199 and select option 2.

Privacy Act Statement

The **Privacy Act of 1974 (P.L. 93-579)** requires that you be given certain information in connection with your submission of the attached form related to a patent application or patent. Accordingly, pursuant to the requirements of the Act, please be advised that: (1) the general authority for the collection of this information is 35 U.S.C. 2(b)(2); (2) furnishing of the information solicited is voluntary; and (3) the principal purpose for which the information is used by the U.S. Patent and Trademark Office is to process and/or examine your submission related to a patent application or patent. If you do not furnish the requested information, the U.S. Patent and Trademark Office may not be able to process and/or examine your submission, which may result in termination of proceedings or abandonment of the application or expiration of the patent.

The information provided by you in this form will be subject to the following routine uses:

1. The information on this form will be treated confidentially to the extent allowed under the Freedom of Information Act (5 U.S.C. 552) and the Privacy Act (5 U.S.C 552a). Records from this system of records may be disclosed to the Department of Justice to determine whether disclosure of these records is required by the Freedom of Information Act.
2. A record from this system of records may be disclosed, as a routine use, in the course of presenting evidence to a court, magistrate, or administrative tribunal, including disclosures to opposing counsel in the course of settlement negotiations.
3. A record in this system of records may be disclosed, as a routine use, to a Member of Congress submitting a request involving an individual, to whom the record pertains, when the individual has requested assistance from the Member with respect to the subject matter of the record.
4. A record in this system of records may be disclosed, as a routine use, to a contractor of the Agency having need for the information in order to perform a contract. Recipients of information shall be required to comply with the requirements of the Privacy Act of 1974, as amended, pursuant to 5 U.S.C. 552a(m).
5. A record related to an International Application filed under the Patent Cooperation Treaty in this system of records may be disclosed, as a routine use, to the International Bureau of the World Intellectual Property Organization, pursuant to the Patent Cooperation Treaty.
6. A record in this system of records may be disclosed, as a routine use, to another federal agency for purposes of National Security review (35 U.S.C. 181) and for review pursuant to the Atomic Energy Act (42 U.S.C. 218(c)).
7. A record from this system of records may be disclosed, as a routine use, to the Administrator, General Services, or his/her designee, during an inspection of records conducted by GSA as part of that agency's responsibility to recommend improvements in records management practices and programs, under authority of 44 U.S.C. 2904 and 2906. Such disclosure shall be made in accordance with the GSA regulations governing inspection of records for this purpose, and any other relevant (*i.e.*, GSA or Commerce) directive. Such disclosure shall not be used to make determinations about individuals.
8. A record from this system of records may be disclosed, as a routine use, to the public after either publication of the application pursuant to 35 U.S.C. 122(b) or issuance of a patent pursuant to 35 U.S.C. 151. Further, a record may be disclosed, subject to the limitations of 37 CFR 1.14, as a routine use, to the public if the record was filed in an application which became abandoned or in which the proceedings were terminated and which application is referenced by either a published application, an application open to public inspection or an issued patent.
9. A record from this system of records may be disclosed, as a routine use, to a Federal, State, or local law enforcement agency, if the USPTO becomes aware of a violation or potential violation of law or regulation.

Application No.: 15/035,774
Paper Dated: July 13, 2016
Attorney Docket No. SC 14208WOUS

IN THE UNITED STATES PATENT AND TRADEMARK OFFICE

In re Application of	:	BERGMAN
Serial No.	:	15/035,774
Confirmation No.	:	3999
Group Art Unit	:	
Examiner	:	
Filed	:	May 11, 2016

Title: GYRATORY CRUSHER MAIN SHAFT AND ASSEMBLY

Commissioner for Patents
P.O. Box 1450
Alexandria, VA 22313-1450

REQUEST FOR CORRECTION TO INVENTOR NAME UNDER 37 CFR 1.48 (f)

Applicant respectfully submits a corrected Application Data Sheet under 37 CFR 1.76 (b)(1) indicating a correction to the spelling of the inventor name. The change is indicated by an underline of the information to be added. A signed Oath is also submitted along with a fee of $140 per 37 CFR 1.17(i).

CONCLUSION

If the Office has any questions or comments or requires any additional information, I invite the Office to telephone me at the number listed below.

Respectfully submitted,

/Corinne Gorski/

Corinne Gorski
Registration No. 34339

Diamond Innovations, Inc.
6325 Huntley Road
Worthington, OH 43085
Tel. 703-505-4761
Fax. 614.438.2235

Electronic Acknowledgement Receipt

EFS ID:	26340281
Application Number:	15035774
International Application Number:	
Confirmation Number:	3999
Title of Invention:	GYRATORY CRUSHER MAIN SHAFT AND ASSEMBLY
First Named Inventor/Applicant Name:	Axel BERGMAN
Customer Number:	78686
Filer:	Corinne R. Gorski
Filer Authorized By:	
Attorney Docket Number:	SC 14208WOUS
Receipt Date:	13-JUL-2016
Filing Date:	11-MAY-2016
Time Stamp:	16:11:09
Application Type:	U.S. National Stage under 35 USC 371

Payment information:

Submitted with Payment	yes
Payment Type	Deposit Account
Payment was successfully received in RAM	$270
RAM confirmation Number	13515
Deposit Account	505792
Authorized User	GORSKI, CORINNE R.
The Director of the USPTO is hereby authorized to charge indicated fees and credit any overpayment as follows:	

File Listing:

Document Number	Document Description	File Name	File Size(Bytes)/ Message Digest	Multi Part /.zip	Pages (if appl.)
1	Application Data Sheet	14208WOUScorrectedADS.pdf	1162710 c3cdaf9f372eb8fcaae20659aa64f6aad7f24a97	no	9
Warnings:					
Information:					
This is not an USPTO supplied ADS fillable form					
2	Oath or Declaration filed	14208WOUSSignedOathEriksson.pdf	915770 de81c32965c002b600f0148d79a9d5f46d76e678	no	2
Warnings:					
Information:					
3	Oath or Declaration filed	14208WOUSSignedOathMalmqvist.pdf	1344748 fc3ab56c947797c95c06bb06306b0a2cc2fe7956	no	3
Warnings:					
Information:					
4	Oath or Declaration filed	14208WOUSSignedOathNilsson.pdf	911022 689148f6edb764d00943fd7aeafea5438ffd1d03	no	2
Warnings:					
Information:					
5	Oath or Declaration filed	14208WOUSSignedOathLarsson.pdf	1345910 34bb36ef097d739b4d1a866f574abcb8d002d0bd	no	3
Warnings:					
Information:					
6	Oath or Declaration filed	14208WOUSSignedOathBergman.pdf	830762 143dec84568d84eb257fcc003f613e42bde0b6bb	no	2
Warnings:					

Information:					
7	Oath or Declaration filed	14208WOUSSignedOathHallberg.pdf	835342 7b9f52d4b46274985705d077c6bd7a42f6bd1f3	no	2
Warnings:					
Information:					
8	Oath or Declaration filed	14208WOUSSignedOathHolmberg.pdf	669102 8d7874a9a406d4d72065c9c7d4fda5522655b363	no	2
Warnings:					
Information:					
9	Oath or Declaration filed	14208WOUSSignedOathEriksonBA.pdf	833476 0b2350a78257e0c0561158dd85df9b347bd37d60	no	2
Warnings:					
Information:					
10	Miscellaneous Incoming Letter	14208WOUSLetterforCorrectionofADS.pdf	6891 31a7ebf83dd3ee72efd0f99b80bc6ce5808b7def	no	2
Warnings:					
Information:					
11	Fee Worksheet (SB06)	fee-info.pdf	32247 d89ba196678696ddf271eb9b14f42ea6fec693e1	no	2
Warnings:					
Information:					
		Total Files Size (in bytes):	8887980		

This Acknowledgement Receipt evidences receipt on the noted date by the USPTO of the indicated documents, characterized by the applicant, and including page counts, where applicable. It serves as evidence of receipt similar to a Post Card, as described in MPEP 503.

New Applications Under 35 U.S.C. 111

If a new application is being filed and the application includes the necessary components for a filing date (see 37 CFR 1.53(b)-(d) and MPEP 506), a Filing Receipt (37 CFR 1.54) will be issued in due course and the date shown on this Acknowledgement Receipt will establish the filing date of the application.

National Stage of an International Application under 35 U.S.C. 371

If a timely submission to enter the national stage of an international application is compliant with the conditions of 35 U.S.C. 371 and other applicable requirements a Form PCT/DO/EO/903 indicating acceptance of the application as a national stage submission under 35 U.S.C. 371 will be issued in addition to the Filing Receipt, in due course.

New International Application Filed with the USPTO as a Receiving Office

If a new international application is being filed and the international application includes the necessary components for an international filing date (see PCT Article 11 and MPEP 1810), a Notification of the International Application Number and of the International Filing Date (Form PCT/RO/105) will be issued in due course, subject to prescriptions concerning national security, and the date shown on this Acknowledgement Receipt will establish the international filing date of the application.

United States Patent and Trademark Office

Office of the Chief Financial Officer

Document Code:WFEE

User :C46183

Refund Accounting Date:10/26/2020

Effective Date	Sale Item Reference Number	Refund Total
10/22/2020	15035774	$140.00

Document Number	Fee Code	Fee Code Description	Amount Paid	Payment Method	Account Number
I20200PB07246943	1464	PETITION FEE- 37 CFR 1.17(H) (GROUP III)	$140.00	DA	505792

United States Patent and Trademark Office

Office of the Chief Financial Officer

Document Code:WFEE

User :C46183

Sale Accounting Date:10/26/2020

Sale Item Reference Number	Effective Date
15035774	10/22/2020

Document Number	Fee Code	Fee Code Description	Amount Paid	Payment Method
I20200PB05336904	1830	PROCESSING FEE, EXCEPT PROV. APPLS.	$140.00	Deposit Account

United States Patent and Trademark Office

Office of the Chief Financial Officer

Document Code:WFEE

User :C46183

Sale Adjustment Accounting Date:10/26/2020

Effective Date	Sale Accounting Date	Sale Item Reference Number
10/22/2020	10/26/2020	15035774

Document Number	Fee Code	Fee Code Description	Amount Paid	Payment Method
I20200PB07246943	1464	PETITION FEE- 37 CFR 1.17(H) (GROUP III)	$140.00	DA

UNITED STATES PATENT AND TRADEMARK OFFICE

UNITED STATES DEPARTMENT OF COMMERCE
United States Patent and Trademark Office
Address: COMMISSIONER FOR PATENTS
P.O. Box 1450
Alexandria, Virginia 22313-1450
www.uspto.gov

APPLICATION NUMBER	FILING OR 371(C) DATE	FIRST NAMED APPLICANT	ATTY. DOCKET NO./TITLE
15/035,774	05/11/2016	Axel BERGMAN	SC 14208WOUS

CONFIRMATION NO. 3999

78686
Sandvik Intellectual Property
3200 Highlands Parkway SE
#200
Smyrna, GA 30082

37 CFR 1.48(f)
ACKNOWLEDGEMENT LETTER

OC000000120917670

Date Mailed: 10/27/2020

NOTICE OF ACCEPTANCE OF REQUEST UNDER 37 CFR 1.48(f)

This is in response to the applicant's request under 37 CFR 1.48(f) submitted on 10/22/2020.

The request under 37 CFR 1.48(f) to correct the inventorship, to correct or update the name of an inventor, or to correct the order of names of joint inventors is accepted.

Questions about the contents of this notice and the requirements it sets forth should be directed to the Office of Data Management, Application Assistance Unit, at **(571) 272-4000** or **(571) 272-4200** or **1-888-786-0101**.

/fstephanos/

UNITED STATES PATENT AND TRADEMARK OFFICE

UNITED STATES DEPARTMENT OF COMMERCE
United States Patent and Trademark Office
Address: COMMISSIONER FOR PATENTS
P.O. Box 1450
Alexandria, Virginia 22313-1450
www.uspto.gov

APPLICATION NUMBER	FILING or 371(c) DATE	GRP ART UNIT	FIL FEE REC'D	ATTY.DOCKET.NO	TOT CLAIMS	IND CLAIMS
15/035,774	05/11/2016	3725	1760	SC 14208WOUS	14	1

CONFIRMATION NO. 3999

UPDATED FILING RECEIPT

78686
Sandvik Intellectual Property
3200 Highlands Parkway SE
#200
Smyrna, GA 30082

OC000000120917688

Date Mailed: 10/27/2020

Receipt is acknowledged of this non-provisional utility patent application. The application will be taken up for examination in due course. Applicant will be notified as to the results of the examination. Any correspondence concerning the application must include the following identification information: the U.S. APPLICATION NUMBER, FILING DATE, NAME OF FIRST INVENTOR, and TITLE OF INVENTION. Fees transmitted by check or draft are subject to collection.

Please verify the accuracy of the data presented on this receipt. If an error is noted on this Filing Receipt, please submit a written request for a corrected Filing Receipt, including a properly marked-up ADS showing the changes with strike-through for deletions and underlining for additions. If you received a "Notice to File Missing Parts" or other Notice requiring a response for this application, please submit any request for correction to this Filing Receipt with your reply to the Notice. When the USPTO processes the reply to the Notice, the USPTO will generate another Filing Receipt incorporating the requested corrections provided that the request is grantable.

Inventor(s)

Axel BERGMAN, Malmo, SWEDEN;
Mikael M LARSSON, Eslov, SWEDEN;
Patric MALMQVIST, Svedala, SWEDEN;
Anders HALLBERG, Sodra Sandby, SWEDEN;
Matts-Ake NILSSON, Gards Kopinge, SWEDEN;
Fredrik ERIKSSON, Malmo, SWEDEN;
Bengt-Arne ERIKSSON, Svedala, SWEDEN;
Anne HOLMBERG, Loddekopinge, SWEDEN;

Applicant(s)

SANDVIK INTELECTUAL PROPERTY AB, Sandviken, SWEDEN;

Power of Attorney: None

Domestic Priority data as claimed by applicant

This application is a 371 of PCT/EP2014/060594 05/23/2014

Foreign Applications (You may be eligible to benefit from the **Patent Prosecution Highway** program at the USPTO. Please see http://www.uspto.gov for more information.)
EUROPEAN PATENT OFFICE (EPO) 13192402.9 11/12/2013

Permission to Access Application via Priority Document Exchange: Yes

Permission to Access Search Results: No

Applicant may provide or rescind an authorization for access using Form PTO/SB/39 or Form PTO/SB/69 as appropriate.

Projected Publication Date: Not Applicable

Non-Publication Request: No

Early Publication Request: No

Title

GYRATORY CRUSHER MAIN SHAFT AND ASSEMBLY

Preliminary Class

241

Statement under 37 CFR 1.55 or 1.78 for AIA (First Inventor to File) Transition Applications: No

PROTECTING YOUR INVENTION OUTSIDE THE UNITED STATES

Since the rights granted by a U.S. patent extend only throughout the territory of the United States and have no effect in a foreign country, an inventor who wishes patent protection in another country must apply for a patent in a specific country or in regional patent offices. Applicants may wish to consider the filing of an international application under the Patent Cooperation Treaty (PCT). An international (PCT) application generally has the same effect as a regular national patent application in each PCT-member country. The PCT process **simplifies** the filing of patent applications on the same invention in member countries, but **does not result** in a grant of "an international patent" and does not eliminate the need of applicants to file additional documents and fees in countries where patent protection is desired.

Almost every country has its own patent law, and a person desiring a patent in a particular country must make an application for patent in that country in accordance with its particular laws. Since the laws of many countries differ in various respects from the patent law of the United States, applicants are advised to seek guidance from specific foreign countries to ensure that patent rights are not lost prematurely.

Applicants also are advised that in the case of inventions made in the United States, the Director of the USPTO must issue a license before applicants can apply for a patent in a foreign country. The filing of a U.S. patent application serves as a request for a foreign filing license. The application's filing receipt contains further information and guidance as to the status of applicant's license for foreign filing.

Applicants may wish to consult the USPTO booklet, "General Information Concerning Patents" (specifically, the section entitled "Treaties and Foreign Patents") for more information on timeframes and deadlines for filing foreign patent applications. The guide is available either by contacting the USPTO Contact Center at 800-786-9199, or it can be viewed on the USPTO website at http://www.uspto.gov/web/offices/pac/doc/general/index.html.

For information on preventing theft of your intellectual property (patents, trademarks and copyrights), you may wish to consult the U.S. Government website, http://www.stopfakes.gov. Part of a Department of Commerce initiative, this website includes self-help "toolkits" giving innovators guidance on how to protect intellectual property in specific countries such as China, Korea and Mexico. For questions regarding patent enforcement issues, applicants may call the U.S. Government hotline at 1-866-999-HALT (1-866-999-4258).

LICENSE FOR FOREIGN FILING UNDER

Title 35, United States Code, Section 184

Title 37, Code of Federal Regulations, 5.11 & 5.15

GRANTED

The applicant has been granted a license under 35 U.S.C. 184, if the phrase "IF REQUIRED, FOREIGN FILING LICENSE GRANTED" followed by a date appears on this form. Such licenses are issued in all applications where the conditions for issuance of a license have been met, regardless of whether or not a license may be required as set forth in 37 CFR 5.15. The scope and limitations of this license are set forth in 37 CFR 5.15(a) unless an earlier license has been issued under 37 CFR 5.15(b). The license is subject to revocation upon written notification. The date indicated is the effective date of the license, unless an earlier license of similar scope has been granted under 37 CFR 5.13 or 5.14.

This license is to be retained by the licensee and may be used at any time on or after the effective date thereof unless it is revoked. This license is automatically transferred to any related applications(s) filed under 37 CFR 1.53(d). This license is not retroactive.

The grant of a license does not in any way lessen the responsibility of a licensee for the security of the subject matter as imposed by any Government contract or the provisions of existing laws relating to espionage and the national security or the export of technical data. Licensees should apprise themselves of current regulations especially with respect to certain countries, of other agencies, particularly the Office of Defense Trade Controls, Department of State (with respect to Arms, Munitions and Implements of War (22 CFR 121-128)); the Bureau of Industry and Security, Department of Commerce (15 CFR parts 730-774); the Office of Foreign AssetsControl, Department of Treasury (31 CFR Parts 500+) and the Department of Energy.

NOT GRANTED

No license under 35 U.S.C. 184 has been granted at this time, if the phrase "IF REQUIRED, FOREIGN FILING LICENSE GRANTED" DOES NOT appear on this form. Applicant may still petition for a license under 37 CFR 5.12, if a license is desired before the expiration of 6 months from the filing date of the application. If 6 months has lapsed from the filing date of this application and the licensee has not received any indication of a secrecy order under 35 U.S.C. 181, the licensee may foreign file the application pursuant to 37 CFR 5.15(b).

SelectUSA

The United States represents the largest, most dynamic marketplace in the world and is an unparalleled location for business investment, innovation, and commercialization of new technologies. The U.S. offers tremendous resources and advantages for those who invest and manufacture goods here. Through SelectUSA, our nation works to promote and facilitate business investment. SelectUSA provides information assistance to the international investor community; serves as an ombudsman for existing and potential investors; advocates on behalf of U.S. cities, states, and regions competing for global investment; and counsels U.S. economic development organizations on investment attraction best practices. To learn more about why the United States is the best country in the world to develop technology, manufacture products, deliver services, and grow your business, visit http://www.SelectUSA.gov or call +1-202-482-6800.

UNITED STATES PATENT AND TRADEMARK OFFICE

UNITED STATES DEPARTMENT OF COMMERCE
United States Patent and Trademark Office
Address: COMMISSIONER FOR PATENTS
P.O. Box 1450
Alexandria, Virginia 22313-1450
www.uspto.gov

APPLICATION NO.	FILING DATE	FIRST NAMED INVENTOR	ATTORNEY DOCKET NO.	CONFIRMATION NO.
15/035,774	05/11/2016	Axel BERGMAN	SC 14208WOUS	3999

78686 7590 10/30/2020

Sandvik Intellectual Property
3200 Highlands Parkway SE
#200
Smyrna, GA 30082

EXAMINER
FRANCIS, FAYE

ART UNIT	PAPER NUMBER
3725	

NOTIFICATION DATE	DELIVERY MODE
10/30/2020	ELECTRONIC

Please find below and/or attached an Office communication concerning this application or proceeding.

The time period for reply, if any, is set in the attached communication.

Notice of the Office communication was sent electronically on above-indicated "Notification Date" to the following e-mail address(es):

corinne.gorski@sandvik.com
patents@sandvik.com

UNITED STATES PATENT AND TRADEMARK OFFICE

Commissioner for Patents
United States Patent and Trademark Office
P.O. Box 1450
Alexandria, VA 22313-1450
www.uspto.gov

In re Application of	:	
BERGMAN et al.	:	
Application No. 15/035,774	:	DECISION ON PETITION
Filed: 11 May 2016	:	
Attorney Docket Number:	:	
SC 14208WOUS	:	

This is a decision on the petition under the unintentional provisions of 37 CFR 1.137(a), filed October 22, 2020, to revive the above-identified application.

The petition is **DISMISSED**.

Any request for reconsideration of this decision must be submitted within **TWO (2) MONTHS** from the mail date of this decision. Extensions of time under 37 CFR 1.136(a) are permitted. The reconsideration request should include a cover letter entitled "Renewed Petition under 37 CFR 1.137(a)." This is **not** a final agency action within the meaning of 5 U.S.C. § 704. No further petition fee is required.

This application became abandoned on September 12, 2019, for failure to timely file the inventor's oath or declaration or substitute statement no later than the date on which the issue fee is paid, as required by the Notice Requiring inventor's Oath or Declaration (Notice) mailed June 11, 2019. The issue fee was timely paid on September 11, 2019. A Notice of Abandonment was mailed September 23, 2019.

A grantable petition under 37 CFR 1.137(a) must be accompanied by: (1) the required reply, unless previously filed; (2) the petition fee as set forth in 37 CFR 1.17(m); and (3) a statement that the entire delay in filing the required reply from the due date for the reply until the filing of a grantable petition pursuant to 37 CFR 1.137(a) was unintentional;

Where there is a question as to whether either the abandonment or the delay in filing a petition under 37 CFR 1.137 was unintentional, the Director may require additional information. See MPEP 711.03(c)(II)(C) and (D).

The present petition lacks item (3) above.

As to item (3) the petition filed on October 22, 2020, did not contain a registration number along with the signature in accordance with 37 CFR 1.4(d)(2)(ii), that provides:

> (2) S-signature. An S-signature is a signature inserted between forward slash marks, but not a handwritten signature as defined by paragraph (d)(1) of this section. An S-signature includes any signature made by electronic or mechanical means, and any other mode of making or applying a signature other than a handwritten signature as provided for in paragraph (d)(1) of this section. Correspondence being filed in the Office in paper, by facsimile transmission as provided in § 1.6(d), or via the Office electronic filing system as an attachment as provided in § 1.6(a)(4), for a patent application, patent, or a reexamination or supplemental examination proceeding may be S-signature signed instead of being personally signed (i.e., with a handwritten signature) as provided for in paragraph (d)(1) of this section. The requirements for an S-signature under this paragraph (d)(2) of this section are as follows.
>
> ...
>
> (ii) A patent practitioner (§ 1.32(a)(1)), signing pursuant to §§ 1.33(b)(1) or 1.33(b)(2), must supply his/her registration number either as part of the S-signature, or immediately below or adjacent to the S-signature. The number (#) character may be used only as part of the S-signature when appearing before a practitioner's registration number; otherwise the number character may not be used in an S-signature

The renewed petition must be signed in accordance with 37 CFR 1.4 and 37 CFR 1.33.

It is not apparent whether the person signing the statement of unintentional delay was in a position to have firsthand or direct knowledge of the facts and circumstances of the delay at issue. Nevertheless, such statement is being treated as having been made as the result of a reasonable inquiry into the facts and circumstances of such delay. See 37 CFR 11.18 and Changes to Representation of Others Before the United States Patent and Trademark Office; Final Rule Notice, 73 Fed. Reg. 47650 (August 14, 2008), 1334 Off. Gaz. Pat. Office 338 (September 9, 2008). In the event that such an inquiry has not been made, petitioner must make such an inquiry. If such inquiry results in the discovery that it is not correct that the entire delay in filing the required reply from the due date for the reply until the filing of a grantable petition pursuant to 37 CFR 1.137 was unintentional, petitioner must notify the Office.

There is no indication that the person signing the petition was ever given a power of attorney to prosecute the application. If the person signing the petition desires to receive future correspondence regarding this application, the appropriate power of attorney document must be submitted.

Further correspondence with respect to this matter should be delivered through one of the following mediums:

By mail:
Mail Stop PETITIONS
Commissioner for Patents
Post Office Box 1450
Alexandria, VA 22313-1450

By hand:	Customer Service Window Mail Stop Petitions Randolph Building 401 Dulany Street Alexandria, VA 22314
By fax:	(571) 273-8300 ATTN: Office of Petitions
By internet:	EFS-Web[1]

Any questions concerning this matter may be directed to Schene Gray at (571) 272-2581 or in her extended absence the undersigned at (571) 272-3222.

/KENYA A THORNTON MCLAUGHLIN/
Attorney Advisor, OPET

[1] www.uspto.gov/ebc/efs_help.html (for help using EFS-Web call the Patent Electronic Business Center at (866) 217-9197).

Patent
Attorney Docket No. SC 14208WOUS
Date: December 9, 2020

IN THE UNITED STATES PATENT AND TRADEMARK OFFICE

In re Patent Application of	)	
	)	
Axel BERGMAN et al	)	Confirmation No.: 3999
	)	
Application No.: 15/035,774	)	
	)	Examiner: Faye Francis
	)	
Filed: May 11, 2016	)	
	)	Group Art Unit: 3725
For: GYRATORY CRUSHER MAIN SHAFT AND ASSEMBLY	)	

MAIL STOP PETITIONS
Commissioner for Patents
P.O. Box 1450
Alexandria, VA 22313-1450

RENEWED PETITION UNDER 37 C.F.R. §1.137(a)

Sir:

The above-identified application became abandoned for failure to file a timely and proper reply to a notice or action by the United States Patent and Trademark Office.

Further to the Petitions filed June 18, 2020 and October 22, 2020, which included a copy of A Request for the Correction to Inventor Name under 37 CFR 1.48(f) that was filed on July 13, 2016 along with a corrected ADS indicating the correct spelling of Ms. Homberg's last name and a signed oath/declaration by Anne "Holmberg" and Electronic Patent Application Fee Transmittal and Electronic Acknowledgement Receipt EFS ID 26340281, which was accepted on October 27, 2020, Applicant resubmits this petition.

APPLICANT HEREBY PETITIONS FOR REVIVAL OF THIS APPLICATION.

The undiscounted petition fee of $2000.00 according to 37 CFR 1.17(m) has been previously submitted.

A Reply in the form of a Request for Continued Examination and the required fee has been previously submitted.

The issue fee and publication fee of $ 1000.00 has been paid previously on May 28, 2019.

Since this utility/plant application was filed on or after June 8, 1995, no terminal disclaimer is required.

A Power of Attorney is being submitted herewith.

The entire delay in filing the required reply from the due date for the required reply until the filing of a grantable petition under 37 CFR 1.137(a) was unintentional.

/Corinne R. Gorski/ December 9, 2020

Corinne R. Gorski
Reg. No.: 34,339

Date

Sandvik Intellectual Property
3200 Highlands Parkway SE
#200
Smyrna, GA 30082
Tel. 703-505-4761

Doc Code: PA..
Document Description: Power of Attorney

PTO/AIA/82B (07-13)
Approved for use through 01/31/2018. OMB 0651-0035
U.S. Patent and Trademark Office; U.S. DEPARTMENT OF COMMERCE
Under the Paperwork Reduction Act of 1995, no persons are required to respond to a collection of information unless it displays a valid OMB control number

POWER OF ATTORNEY BY APPLICANT

I hereby revoke all previous powers of attorney given in the application identified in either the attached transmittal letter or the boxes below.

Application Number	Filing Date

(Note: The boxes above may be left blank if information is provided on form PTO/AIA/82A.)

☑ I hereby appoint the Patent Practitioner(s) associated with the following Customer Number as my/our attorney(s) or agent(s), and to transact all business in the United States Patent and Trademark Office connected therewith for the application referenced in the attached transmittal letter (form PTO/AIA/82A) or identified above: 78686

OR

☐ I hereby appoint Practitioner(s) named in the attached list (form PTO/AIA/82C) as my/our attorney(s) or agent(s), and to transact all business in the United States Patent and Trademark Office connected therewith for the patent application referenced in the attached transmittal letter (form PTO/AIA/82A) or identified above. (Note: Complete form PTO/AIA/82C.)

Please recognize or change the correspondence address for the application identified in the attached transmittal letter or the boxes above to:

☑ The address associated with the above-mentioned Customer Number

OR

☐ The address associated with Customer Number:

OR

☐ Firm or Individual Name					
Address					
City		State		Zip	
Country					
Telephone		Email			

I am the Applicant (if the Applicant is a juristic entity, list the Applicant name in the box):

Sandvik Intellectual Property AB

☐ Inventor or Joint Inventor (title not required below)

☐ Legal Representative of a Deceased or Legally Incapacitated Inventor (title not required below)

☑ Assignee or Person to Whom the Inventor is Under an Obligation to Assign (provide signer's title if applicant is a juristic entity)

☐ Person Who Otherwise Shows Sufficient Proprietary Interest (e.g., a petition under 37 CFR 1.46(b)(2) was granted in the application or is concurrently being filed with this document) (provide signer's title if applicant is a juristic entity)

SIGNATURE of Applicant for Patent

The undersigned (whose title is supplied below) is authorized to act on behalf of the applicant (e.g., where the applicant is a juristic entity).

Signature		Date (Optional)	3/24/20
Name	Urban Simu		
Title	Director, Sandvik Intellectual Property AB		

NOTE: Signature - This form must be signed by the applicant in accordance with 37 CFR 1.33. See 37 CFR 1.4 for signature requirements and certifications. If more than one applicant, use multiple forms.

☑ Total of 1 forms are submitted.

This collection of information is required by 37 CFR 1.131, 1.32, and 1.33. The information is required to obtain or retain a benefit by the public which is to file (and by the USPTO to process) an application. Confidentiality is governed by 35 U.S.C. 122 and 37 CFR 1.11 and 1.14. This collection is estimated to take 3 minutes to complete, including gathering, preparing, and submitting the completed application form to the USPTO. Time will vary depending upon the individual case. Any comments on the amount of time you require to complete this form and/or suggestions for reducing this burden, should be sent to the Chief Information Officer, U.S. Patent and Trademark Office, U.S. Department of Commerce, P.O. Box 1450, Alexandria, VA 22313-1450. DO NOT SEND FEES OR COMPLETED FORMS TO THIS ADDRESS. **SEND TO: Commissioner for Patents, P.O. Box 1450, Alexandria, VA 22313-1450.**

If you need assistance in completing the form, call 1-800-PTO-9199 and select option 2.

Electronic Acknowledgement Receipt

EFS ID:	41335990
Application Number:	15035774
International Application Number:	
Confirmation Number:	3999
Title of Invention:	GYRATORY CRUSHER MAIN SHAFT AND ASSEMBLY
First Named Inventor/Applicant Name:	Axel BERGMAN
Customer Number:	78686
Filer:	Corinne R. Gorski
Filer Authorized By:	
Attorney Docket Number:	SC 14208WOUS
Receipt Date:	09-DEC-2020
Filing Date:	11-MAY-2016
Time Stamp:	13:34:15
Application Type:	U.S. National Stage under 35 USC 371

Payment information:

Submitted with Payment	no

File Listing:

Document Number	Document Description	File Name	File Size(Bytes)/ Message Digest	Multi Part /.zip	Pages (if appl.)
1	Petition for review by the PCT legal office	14028WOUSRenewedPetition1137a_Dec_9_2020.pdf	29482 c028473fc9415b2c641c47d4a04f82c7068ade19	no	2

Warnings:

Information:					
2	Power of Attorney	14208WOUSSIPPOA.pdf	227288 d288c6f41f7fa6ecd6c991f9770215c7de31b672	no	1

Warnings:

The page size in the PDF is too large. The pages should be 8.5 x 11 or A4. If this PDF is submitted, the pages will be resized upon entry into the Image File Wrapper and may affect subsequent processing

Information:

Total Files Size (in bytes):	256770

This Acknowledgement Receipt evidences receipt on the noted date by the USPTO of the indicated documents, characterized by the applicant, and including page counts, where applicable. It serves as evidence of receipt similar to a Post Card, as described in MPEP 503.

New Applications Under 35 U.S.C. 111

If a new application is being filed and the application includes the necessary components for a filing date (see 37 CFR 1.53(b)-(d) and MPEP 506), a Filing Receipt (37 CFR 1.54) will be issued in due course and the date shown on this Acknowledgement Receipt will establish the filing date of the application.

National Stage of an International Application under 35 U.S.C. 371

If a timely submission to enter the national stage of an international application is compliant with the conditions of 35 U.S.C. 371 and other applicable requirements a Form PCT/DO/EO/903 indicating acceptance of the application as a national stage submission under 35 U.S.C. 371 will be issued in addition to the Filing Receipt, in due course.

New International Application Filed with the USPTO as a Receiving Office

If a new international application is being filed and the international application includes the necessary components for an international filing date (see PCT Article 11 and MPEP 1810), a Notification of the International Application Number and of the International Filing Date (Form PCT/RO/105) will be issued in due course, subject to prescriptions concerning national security, and the date shown on this Acknowledgement Receipt will establish the international filing date of the application.

UNITED STATES PATENT AND TRADEMARK OFFICE

UNITED STATES DEPARTMENT OF COMMERCE
United States Patent and Trademark Office
Address: COMMISSIONER FOR PATENTS
P.O. Box 1450
Alexandria, Virginia 22313-1450
www.uspto.gov

APPLICATION NUMBER	FILING OR 371(C) DATE	FIRST NAMED APPLICANT	ATTY. DOCKET NO./TITLE
15/035,774	05/11/2016	Axel BERGMAN	SC 14208WOUS

CONFIRMATION NO. 3999

78686
Sandvik Intellectual Property
3200 Highlands Parkway SE
#200
Smyrna, GA 30082

POA ACCEPTANCE LETTER

OC000000121980516

Date Mailed: 12/14/2020

NOTICE OF ACCEPTANCE OF POWER OF ATTORNEY

This is in response to the Power of Attorney filed 12/09/2020.

The Power of Attorney in this application is accepted. Correspondence in this application will be mailed to the above address as provided by 37 CFR 1.33.

Questions about the contents of this notice and the requirements it sets forth should be directed to the Office of Data Management, Application Assistance Unit, at **(571) 272-4000** or **(571) 272-4200** or **1-888-786-0101**.

/cvorachack/

United States Patent and Trademark Office

Office of the Chief Financial Officer

Document Code:WFEE

User :C41722

Refund Accounting Date:02/03/2021

Effective Date	Sale Item Reference Number	Refund Total
09/11/2019	15035774	$140.00

Document Number	Fee Code	Fee Code Description	Amount Paid	Payment Method	Account Number
I202123D11423077	1617	OATH/DECL > 30 MOS FROM 371 COMMENCEMENT	$140.00	DA	505792

United States Patent and Trademark Office

Office of the Chief Financial Officer

Document Code:WFEE

User :C41722

Sale Adjustment Accounting Date:02/03/2021

Effective Date	Sale Accounting Date	Sale Item Reference Number
09/11/2019	02/03/2021	15035774

Document Number	Fee Code	Fee Code Description	Amount Paid	Payment Method
I202123D11423077	1617	OATH/DECL > 30 MOS FROM 371 COMMENCEMENT	$140.00	DA

United States Patent and Trademark Office

Office of the Chief Financial Officer

Document Code:WFEE

User :C41722

Sale Accounting Date:02/03/2021

Sale Item Reference Number	Effective Date
15035774	09/11/2019

Document Number	Fee Code	Fee Code Description	Amount Paid	Payment Method
I202123D13263113	1464	PETITION FEE- 37 CFR 1.17(H) (GROUP III)	$140.00	Deposit Account

UNITED STATES PATENT AND TRADEMARK OFFICE

UNITED STATES DEPARTMENT OF COMMERCE
United States Patent and Trademark Office
Address: COMMISSIONER FOR PATENTS
P.O. Box 1450
Alexandria, Virginia 22313-1450
www.uspto.gov

APPLICATION NO.	FILING DATE	FIRST NAMED INVENTOR	ATTORNEY DOCKET NO.	CONFIRMATION NO.
15/035,774	05/11/2016	Axel BERGMAN	SC 14208WOUS	3999

78686 7590 02/08/2021

Sandvik Intellectual Property
3200 Highlands Parkway SE
#200
Smyrna, GA 30082

EXAMINER
FRANCIS, FAYE

ART UNIT	PAPER NUMBER
3725	

NOTIFICATION DATE	DELIVERY MODE
02/08/2021	ELECTRONIC

Please find below and/or attached an Office communication concerning this application or proceeding.

The time period for reply, if any, is set in the attached communication.

Notice of the Office communication was sent electronically on above-indicated "Notification Date" to the following e-mail address(es):

corinne.gorski@sandvik.com
patents@sandvik.com

UNITED STATES PATENT AND TRADEMARK OFFICE

Commissioner for Patents
United States Patent and Trademark Office
P.O. Box 1450
Alexandria, VA 22313-1450
www.uspto.gov

In re Application of	:	
BERGMAN et al.	:	
Application No. 15/035,774	:	DECISION ON PETITION
Filed: May 11, 2016	:	
For: GYRATORY CRUSHER MAIN	:	
SHAFT AND ASSEMBLY	:	

This is a decision on the renewed petition under the unintentional provisions of 37 CFR 1.137(a), filed December 09, 2020, to revive the above-identified application.

The petition is **GRANTED**.

This application became abandoned for failure to timely file the inventor's oath or declaration or substitute statement no later than the date on which the issue fee is paid, as required by the Notice Requiring inventor's Oath or Declaration (Notice) mailed June 11, 2019. The issue fee was timely paid on September 11, 2019. Accordingly, the application became abandoned on September 12, 2019. A Notice of Abandonment was mailed September 23, 2019.

The petition satisfies the requirements of 37 CFR 1.137(a) in that petitioner has supplied (1) the reply in the form of Inventor's Oath/Declaration for Anne Holmberg, (2) the petition fee of $2000, and (3) a proper statement of unintentional delay.

In view of the accompanying petition to withdraw from issue and request for continued examination, this application is being referred to the appropriate deciding official for consideration under 37 CFR 1.313(c)(2).

This application is being referred to the Office of Data Management for further processing.

Telephone inquiries concerning this decision should be directed to Schene Gray Paralegal Specialist at (571) 272-258.

/JoAnne L Burke/
JoAnne L. Burke
Lead Paralegal Specialist
Office of Petitions

UNITED STATES PATENT AND TRADEMARK OFFICE

UNITED STATES DEPARTMENT OF COMMERCE
United States Patent and Trademark Office
Address: COMMISSIONER FOR PATENTS
P.O. Box 1450
Alexandria, Virginia 22313-1450
www.uspto.gov

NOTICE OF ALLOWANCE AND FEE(S) DUE

78686 7590 02/22/2021

Sandvik Intellectual Property
3200 Highlands Parkway SE
#200
Smyrna, GA 30082

EXAMINER
FRANCIS, FAYE

ART UNIT	PAPER NUMBER
3725	

DATE MAILED: 02/22/2021

APPLICATION NO.	FILING DATE	FIRST NAMED INVENTOR	ATTORNEY DOCKET NO.	CONFIRMATION NO.
15/035,774	05/11/2016	Axel BERGMAN	SC 14208WOUS	3999

TITLE OF INVENTION: GYRATORY CRUSHER MAIN SHAFT AND ASSEMBLY

APPLN. TYPE	ENTITY STATUS	ISSUE FEE DUE	PUBLICATION FEE DUE	PREV. PAID ISSUE FEE	TOTAL FEE(S) DUE	DATE DUE
nonprovisional	UNDISCOUNTED	$1200	$0.00	$1000.00	$200	05/24/2021

THE APPLICATION IDENTIFIED ABOVE HAS BEEN EXAMINED AND IS ALLOWED FOR ISSUANCE AS A PATENT. PROSECUTION ON THE MERITS IS CLOSED. THIS NOTICE OF ALLOWANCE IS NOT A GRANT OF PATENT RIGHTS. THIS APPLICATION IS SUBJECT TO WITHDRAWAL FROM ISSUE AT THE INITIATIVE OF THE OFFICE OR UPON PETITION BY THE APPLICANT. SEE 37 CFR 1.313 AND MPEP 1308.

THE ISSUE FEE AND PUBLICATION FEE (IF REQUIRED) MUST BE PAID WITHIN THREE MONTHS FROM THE MAILING DATE OF THIS NOTICE OR THIS APPLICATION SHALL BE REGARDED AS ABANDONED. THIS STATUTORY PERIOD CANNOT BE EXTENDED. SEE 35 U.S.C. 151. THE ISSUE FEE DUE INDICATED ABOVE DOES NOT REFLECT A CREDIT FOR ANY PREVIOUSLY PAID ISSUE FEE IN THIS APPLICATION. IF AN ISSUE FEE HAS PREVIOUSLY BEEN PAID IN THIS APPLICATION (AS SHOWN ABOVE), THE RETURN OF PART B OF THIS FORM WILL BE CONSIDERED A REQUEST TO REAPPLY THE PREVIOUSLY PAID ISSUE FEE TOWARD THE ISSUE FEE NOW DUE.

HOW TO REPLY TO THIS NOTICE:

I. Review the ENTITY STATUS shown above. If the ENTITY STATUS is shown as SMALL or MICRO, verify whether entitlement to that entity status still applies.

If the ENTITY STATUS is the same as shown above, pay the TOTAL FEE(S) DUE shown above.

If the ENTITY STATUS is changed from that shown above, on PART B - FEE(S) TRANSMITTAL, complete section number 5 titled "Change in Entity Status (from status indicated above)".

For purposes of this notice, small entity fees are 1/2 the amount of undiscounted fees, and micro entity fees are 1/2 the amount of small entity fees.

II. PART B - FEE(S) TRANSMITTAL, or its equivalent, must be completed and returned to the United States Patent and Trademark Office (USPTO) with your ISSUE FEE and PUBLICATION FEE (if required). If you are charging the fee(s) to your deposit account, section "4b" of Part B - Fee(s) Transmittal should be completed and an extra copy of the form should be submitted. If an equivalent of Part B is filed, a request to reapply a previously paid issue fee must be clearly made, and delays in processing may occur due to the difficulty in recognizing the paper as an equivalent of Part B.

III. All communications regarding this application must give the application number. Please direct all communications prior to issuance to Mail Stop ISSUE FEE unless advised to the contrary.

IMPORTANT REMINDER: Maintenance fees are due in utility patents issuing on applications filed on or after Dec. 12, 1980. It is patentee's responsibility to ensure timely payment of maintenance fees when due. More information is available at www.uspto.gov/PatentMaintenanceFees.

PART B - FEE(S) TRANSMITTAL

Complete and send this form, together with applicable fee(s), by mail or fax, or via EFS-Web.

By mail, send to: Mail Stop ISSUE FEE
Commissioner for Patents
P.O. Box 1450
Alexandria, Virginia 22313-1450

By fax, send to: (571)-273-2885

INSTRUCTIONS: This form should be used for transmitting the ISSUE FEE and PUBLICATION FEE (if required). Blocks 1 through 5 should be completed where appropriate. All further correspondence including the Patent, advance orders and notification of maintenance fees will be mailed to the current correspondence address as indicated unless corrected below or directed otherwise in Block 1, by (a) specifying a new correspondence address; and/or (b) indicating a separate "FEE ADDRESS" for maintenance fee notifications.

CURRENT CORRESPONDENCE ADDRESS (Note: Use Block 1 for any change of address)

78686 7590 02/22/2021
Sandvik Intellectual Property
3200 Highlands Parkway SE
#200
Smyrna, GA 30082

Note: A certificate of mailing can only be used for domestic mailings of the Fee(s) Transmittal. This certificate cannot be used for any other accompanying papers. Each additional paper, such as an assignment or formal drawing, must have its own certificate of mailing or transmission.

Certificate of Mailing or Transmission

I hereby certify that this Fee(s) Transmittal is being deposited with the United States Postal Service with sufficient postage for first class mail in an envelope addressed to the Mail Stop ISSUE FEE address above, or being transmitted to the USPTO via EFS-Web or by facsimile to (571) 273-2885, on the date below.

(Typed or printed name)
(Signature)
(Date)

APPLICATION NO.	FILING DATE	FIRST NAMED INVENTOR	ATTORNEY DOCKET NO.	CONFIRMATION NO.
15/035,774	05/11/2016	Axel BERGMAN	SC 14208WOUS	3999

TITLE OF INVENTION: GYRATORY CRUSHER MAIN SHAFT AND ASSEMBLY

APPLN. TYPE	ENTITY STATUS	ISSUE FEE DUE	PUBLICATION FEE DUE	PREV. PAID ISSUE FEE	TOTAL FEE(S) DUE	DATE DUE
nonprovisional	UNDISCOUNTED	$1200	$0.00	$1000.00	$200	05/24/2021

EXAMINER	ART UNIT	CLASS-SUBCLASS
FRANCIS, FAYE	3725	241-209000

1. Change of correspondence address or indication of "Fee Address" (37 CFR 1.363).

❑ Change of correspondence address (or Change of Correspondence Address form PTO/SB/122) attached.

❑ "Fee Address" indication (or "Fee Address" Indication form PTO/SB/47; Rev 03-09 or more recent) attached. **Use of a Customer Number is required.**

2. For printing on the patent front page, list
(1) The names of up to 3 registered patent attorneys or agents OR, alternatively,
(2) The name of a single firm (having as a member a registered attorney or agent) and the names of up to 2 registered patent attorneys or agents. If no name is listed, no name will be printed.

1 _____
2 _____
3 _____

3. ASSIGNEE NAME AND RESIDENCE DATA TO BE PRINTED ON THE PATENT (print or type)

PLEASE NOTE: Unless an assignee is identified below, no assignee data will appear on the patent. If an assignee is identified below, the document must have been previously recorded, or filed for recordation, as set forth in 37 CFR 3.11 and 37 CFR 3.81(a). Completion of this form is NOT a substitute for filing an assignment.

(A) NAME OF ASSIGNEE (B) RESIDENCE: (CITY and STATE OR COUNTRY)

Please check the appropriate assignee category or categories (will not be printed on the patent) : ❑ Individual ❑ Corporation or other private group entity ❑ Government

4a. Fees submitted: ❑ Issue Fee ❑ Publication Fee (if required) ❑ Advance Order - # of Copies _____

4b. Method of Payment: *(Please first reapply any previously paid fee shown above)*

❑ Electronic Payment via EFS-Web ❑ Enclosed check ❑ Non-electronic payment by credit card (Attach form PTO-2038)

❑ The Director is hereby authorized to charge the required fee(s), any deficiency, or credit any overpayment to Deposit Account No. _____

5. **Change in Entity Status** (from status indicated above)

❑ Applicant certifying micro entity status. See 37 CFR 1.29

❑ Applicant asserting small entity status. See 37 CFR 1.27

❑ Applicant changing to regular undiscounted fee status.

NOTE: Absent a valid certification of Micro Entity Status (see forms PTO/SB/15A and 15B), issue fee payment in the micro entity amount will not be accepted at the risk of application abandonment.
NOTE: If the application was previously under micro entity status, checking this box will be taken to be a notification of loss of entitlement to micro entity status.
NOTE: Checking this box will be taken to be a notification of loss of entitlement to small or micro entity status, as applicable.

NOTE: This form must be signed in accordance with 37 CFR 1.31 and 1.33. See 37 CFR 1.4 for signature requirements and certifications.

Authorized Signature _____ Date _____

Typed or printed name _____ Registration No. _____

UNITED STATES PATENT AND TRADEMARK OFFICE

UNITED STATES DEPARTMENT OF COMMERCE
United States Patent and Trademark Office
Address: COMMISSIONER FOR PATENTS
P.O. Box 1450
Alexandria, Virginia 22313-1450
www.uspto.gov

APPLICATION NO.	FILING DATE	FIRST NAMED INVENTOR	ATTORNEY DOCKET NO.	CONFIRMATION NO.
15/035,774	05/11/2016	Axel BERGMAN	SC 14208WOUS	3999

78686 7590 02/22/2021

Sandvik Intellectual Property
3200 Highlands Parkway SE
#200
Smyrna, GA 30082

EXAMINER	
FRANCIS, FAYE	
ART UNIT	PAPER NUMBER
3725	

DATE MAILED: 02/22/2021

Determination of Patent Term Adjustment under 35 U.S.C. 154 (b)
(Applications filed on or after May 29, 2000)

The Office has discontinued providing a Patent Term Adjustment (PTA) calculation with the Notice of Allowance.

Section 1(h)(2) of the AIA Technical Corrections Act amended 35 U.S.C. 154(b)(3)(B)(i) to eliminate the requirement that the Office provide a patent term adjustment determination with the notice of allowance. See Revisions to Patent Term Adjustment, 78 Fed. Reg. 19416, 19417 (Apr. 1, 2013). Therefore, the Office is no longer providing an initial patent term adjustment determination with the notice of allowance. The Office will continue to provide a patent term adjustment determination with the Issue Notification Letter that is mailed to applicant approximately three weeks prior to the issue date of the patent, and will include the patent term adjustment on the patent. Any request for reconsideration of the patent term adjustment determination (or reinstatement of patent term adjustment) should follow the process outlined in 37 CFR 1.705.

Any questions regarding the Patent Term Extension or Adjustment determination should be directed to the Office of Patent Legal Administration at (571)-272-7702. Questions relating to issue and publication fee payments should be directed to the Customer Service Center of the Office of Patent Publication at 1-(888)-786-0101 or (571)-272-4200.

OMB Clearance and PRA Burden Statement for PTOL-85 Part B

The Paperwork Reduction Act (PRA) of 1995 requires Federal agencies to obtain Office of Management and Budget approval before requesting most types of information from the public. When OMB approves an agency request to collect information from the public, OMB (i) provides a valid OMB Control Number and expiration date for the agency to display on the instrument that will be used to collect the information and (ii) requires the agency to inform the public about the OMB Control Number's legal significance in accordance with 5 CFR 1320.5(b).

The information collected by PTOL-85 Part B is required by 37 CFR 1.311. The information is required to obtain or retain a benefit by the public which is to file (and by the USPTO to process) an application. Confidentiality is governed by 35 U.S.C. 122 and 37 CFR 1.14. This collection is estimated to take 30 minutes to complete, including gathering, preparing, and submitting the completed application form to the USPTO. Time will vary depending upon the individual case. Any comments on the amount of time you require to complete this form and/or suggestions for reducing this burden, should be sent to the Chief Information Officer, U.S. Patent and Trademark Office, U.S. Department of Commerce, P.O. Box 1450, Alexandria, Virginia 22313-1450. DO NOT SEND FEES OR COMPLETED FORMS TO THIS ADDRESS. SEND TO: Commissioner for Patents, P.O. Box 1450, Alexandria, Virginia 22313-1450. Under the Paperwork Reduction Act of 1995, no persons are required to respond to a collection of information unless it displays a valid OMB control number.

Privacy Act Statement

The Privacy Act of 1974 (P.L. 93-579) requires that you be given certain information in connection with your submission of the attached form related to a patent application or patent. Accordingly, pursuant to the requirements of the Act, please be advised that: (1) the general authority for the collection of this information is 35 U.S.C. 2(b)(2); (2) furnishing of the information solicited is voluntary; and (3) the principal purpose for which the information is used by the U.S. Patent and Trademark Office is to process and/or examine your submission related to a patent application or patent. If you do not furnish the requested information, the U.S. Patent and Trademark Office may not be able to process and/or examine your submission, which may result in termination of proceedings or abandonment of the application or expiration of the patent.

The information provided by you in this form will be subject to the following routine uses:

1. The information on this form will be treated confidentially to the extent allowed under the Freedom of Information Act (5 U.S.C. 552) and the Privacy Act (5 U.S.C 552a). Records from this system of records may be disclosed to the Department of Justice to determine whether disclosure of these records is required by the Freedom of Information Act.
2. A record from this system of records may be disclosed, as a routine use, in the course of presenting evidence to a court, magistrate, or administrative tribunal, including disclosures to opposing counsel in the course of settlement negotiations.
3. A record in this system of records may be disclosed, as a routine use, to a Member of Congress submitting a request involving an individual, to whom the record pertains, when the individual has requested assistance from the Member with respect to the subject matter of the record.
4. A record in this system of records may be disclosed, as a routine use, to a contractor of the Agency having need for the information in order to perform a contract. Recipients of information shall be required to comply with the requirements of the Privacy Act of 1974, as amended, pursuant to 5 U.S.C. 552a(m).
5. A record related to an International Application filed under the Patent Cooperation Treaty in this system of records may be disclosed, as a routine use, to the International Bureau of the World Intellectual Property Organization, pursuant to the Patent Cooperation Treaty.
6. A record in this system of records may be disclosed, as a routine use, to another federal agency for purposes of National Security review (35 U.S.C. 181) and for review pursuant to the Atomic Energy Act (42 U.S.C. 218(c)).
7. A record from this system of records may be disclosed, as a routine use, to the Administrator, General Services, or his/her designee, during an inspection of records conducted by GSA as part of that agency's responsibility to recommend improvements in records management practices and programs, under authority of 44 U.S.C. 2904 and 2906. Such disclosure shall be made in accordance with the GSA regulations governing inspection of records for this purpose, and any other relevant (i.e., GSA or Commerce) directive. Such disclosure shall not be used to make determinations about individuals.
8. A record from this system of records may be disclosed, as a routine use, to the public after either publication of the application pursuant to 35 U.S.C. 122(b) or issuance of a patent pursuant to 35 U.S.C. 151. Further, a record may be disclosed, subject to the limitations of 37 CFR 1.14, as a routine use, to the public if the record was filed in an application which became abandoned or in which the proceedings were terminated and which application is referenced by either a published application, an application open to public inspection or an issued patent.
9. A record from this system of records may be disclosed, as a routine use, to a Federal, State, or local law enforcement agency, if the USPTO becomes aware of a violation or potential violation of law or regulation.

Notice of Allowability	Application No. 15/035,774	Applicant(s) BERGMAN et al.	
	Examiner FAYE FRANCIS	Art Unit 3725	AIA (FITF) Status Yes

-- The MAILING DATE of this communication appears on the cover sheet with the correspondence address--

All claims being allowable, PROSECUTION ON THE MERITS IS (OR REMAINS) CLOSED in this application. If not included herewith (or previously mailed), a Notice of Allowance (PTOL-85) or other appropriate communication will be mailed in due course. **THIS NOTICE OF ALLOWABILITY IS NOT A GRANT OF PATENT RIGHTS.** This application is subject to withdrawal from issue at the initiative of the Office or upon petition by the applicant. See 37 CFR 1.313 and MPEP 1308.

1. ☑ This communication is responsive to amendment filed on 1/25/19.
   ☐ A declaration(s)/affidavit(s) under **37 CFR 1.130(b)** was/were filed on _____.

2. ☐ An election was made by the applicant in response to a restriction requirement set forth during the interview on _____; the restriction requirement and election have been incorporated into this action.

3. ☑ The allowed claim(s) is/are 1-14 . As a result of the allowed claim(s), you may be eligible to benefit from the **Patent Prosecution Highway** program at a participating intellectual property office for the corresponding application. For more information, please see **http://www.uspto.gov/patents/init_events/pph/index.jsp** or send an inquiry to **PPHfeedback@uspto.gov.**

4. ☑ Acknowledgment is made of a claim for foreign priority under 35 U.S.C. § 119(a)-(d) or (f).

   Certified copies:

   a) ☑ All b) ☐ Some *c) ☐ None of the:

   1. ☑ Certified copies of the priority documents have been received.
   2. ☐ Certified copies of the priority documents have been received in Application No. _____ .
   3. ☐ Copies of the certified copies of the priority documents have been received in this national stage application from the International Bureau (PCT Rule 17.2(a)).

   * Certified copies not received: _____ .

Applicant has THREE MONTHS FROM THE "MAILING DATE" of this communication to file a reply complying with the requirements noted below. Failure to timely comply will result in ABANDONMENT of this application.
THIS THREE-MONTH PERIOD IS NOT EXTENDABLE.

5. ☐ CORRECTED DRAWINGS (as "replacement sheets") must be submitted.
   ☐ including changes required by the attached Examiner's Amendment / Comment or in the Office action of Paper No./Mail Date _____ .

   Identifying indicia such as the application number (see 37 CFR 1.84(c)) should be written on the drawings in the front (not the back) of each sheet. Replacement sheet(s) should be labeled as such in the header according to 37 CFR 1.121(d).

6. ☐ DEPOSIT OF and/or INFORMATION about the deposit of BIOLOGICAL MATERIAL must be submitted. Note the attached Examiner's comment regarding REQUIREMENT FOR THE DEPOSIT OF BIOLOGICAL MATERIAL.

Attachment(s)

1. ☐ Notice of References Cited (PTO-892)
2. ☐ Information Disclosure Statements (PTO/SB/08), Paper No./Mail Date _____.
3. ☐ Examiner's Comment Regarding Requirement for Deposit of Biological Material _____.
4. ☐ Interview Summary (PTO-413), Paper No./Mail Date. _____.
5. ☐ Examiner's Amendment/Comment
6. ☐ Examiner's Statement of Reasons for Allowance
7. ☐ Other _____.

/FAYE FRANCIS/
Primary Examiner, Art Unit 3725

Search Notes	Application/Control No.	Applicant(s)/Patent Under Reexamination
	15/035,774	BERGMAN et al.
	Examiner	Art Unit
	FAYE FRANCIS	3725

CPC - Searched*		
Symbol	**Date**	**Examiner**
B02C2/02, 04, 06	9/19/2018	FF
Updated.	03/18/2019	FF
Updated.	02/14/2021	FF

CPC Combination Sets - Searched*		
Symbol	**Date**	**Examiner**

US Classification - Searched*			
Class	**Subclass**	**Date**	**Examiner**
241	207-209	9/19/2018	FF
Updated.		03/18/2019	FF
Updated.		02/14/2021	FF

* See search history printout included with this form or the SEARCH NOTES box below to determine the scope of the search.

Search Notes		
Search Notes	**Date**	**Examiner**
B02C2/02, 04, 06	9/19/2018	FF
Inventors name search done.	03/18/2019	FF
Updated.	02/14/2021	FF

Search Notes	Application/Control No.	Applicant(s)/Patent Under Reexamination
	15/035,774	BERGMAN et al.
	Examiner	Art Unit
	FAYE FRANCIS	3725

Interference Search			
US Class/CPC Symbol	US Subclass/CPC Group	Date	Examiner
	Same as above.	03/18/2019	FF
	Updated.	02/14/2021	

Issue Classification	Application/Control No.	Applicant(s)/Patent Under Reexamination
	15/035,774	BERGMAN et al.
	Examiner	**Art Unit**
	FAYE FRANCIS	3725

CPC						
Symbol					**Type**	**Version**
B02C	/	2	/	06	F	2013-01-01
B02C	/	2	/	04	I	2013-01-01
B02C	/	2	/	02	I	2013-01-01

CPC Combination Sets								
Symbol					**Type**	**Set**	**Ranking**	**Version**
	/		/					

NONE		Total Claims Allowed:	
(Assistant Examiner)	(Date)	14	
/FAYE FRANCIS/ Primary Examiner, Art Unit 3725	14 February 2021	O.G. Print Claim(s)	O.G. Print Figure
(Primary Examiner)	(Date)	1	3

Issue Classification	Application/Control No.	Applicant(s)/Patent Under Reexamination
	15/035,774	BERGMAN et al.
	Examiner	**Art Unit**
	FAYE FRANCIS	3725

INTERNATIONAL CLASSIFICATION					
CLAIMED					
B02C	/	2	/	00	

NON-CLAIMED				
	/		/	

US ORIGINAL CLASSIFICATION	
CLASS	**SUBCLASS**

CROSS REFERENCES(S)						
CLASS	**SUBCLASS (ONE SUBCLASS PER BLOCK)**					

NONE		**Total Claims Allowed:**	
(Assistant Examiner)	(Date)	14	
/FAYE FRANCIS/ Primary Examiner, Art Unit 3725	14 February 2021	O.G. Print Claim(s)	O.G. Print Figure
(Primary Examiner)	(Date)	1	3

Issue Classification	Application/Control No.	Applicant(s)/Patent Under Reexamination
	15/035,774	BERGMAN et al.
	Examiner	**Art Unit**
	FAYE FRANCIS	3725

☑ Claims renumbered in the same order as presented by applicant ☐ CPA ☐ T.D. ☐ R.1.47

CLAIMS

Final	Original	Final	Original	Final	Original	Final	Original	Final	Original	Final	Original	Final	Original	Final	Original
	1		10												
	2		11												
	3		12												
	4		13												
	5		14												
	6														
	7														
	8														
	9														

NONE		**Total Claims Allowed:**	
(Assistant Examiner)	(Date)	14	
/FAYE FRANCIS/ Primary Examiner, Art Unit 3725	14 February 2021	O.G. Print Claim(s)	O.G. Print Figure
(Primary Examiner)	(Date)	1	3

EAST Search History

EAST Search History (Prior Art)

Ref #	Hits	Search Query	DBs	Default Operator	Plurals	Time Stamp
L1	60	((("BERGMAN") near3 ("Axel"))).INV.	US-PGPUB; USPAT; USOCR	OR	ON	2021/02/14 10:04
L2	27	(((("LARSSON") near3 ("Mikael") near3 ("M"))).INV.	US-PGPUB; USPAT; USOCR	OR	ON	2021/02/14 10:04
L3	35	((("MALMQVIST") near3 ("Patric"))).INV.	US-PGPUB; USPAT; USOCR	OR	ON	2021/02/14 10:04
L4	43	((("HALLBERG") near3 ("Anders"))).INV.	US-PGPUB; USPAT; USOCR	OR	ON	2021/02/14 10:04
L5	3	((("NILSSON") near3 ("Matts-Ake"))).INV.	US-PGPUB; USPAT; USOCR	OR	ON	2021/02/14 10:04
L6	26	((("ERIKSSON") near3 ("Fredrik"))).INV.	US-PGPUB; USPAT; USOCR	OR	ON	2021/02/14 10:04
L7	57	((("ERIKSSON") near3 ("Bengt-Arne"))).INV.	US-PGPUB; USPAT; USOCR	OR	ON	2021/02/14 10:04
L8	1	((("HOLOMBERG") near3 ("Anne"))).INV.	US-PGPUB; USPAT; USOCR	OR	ON	2021/02/14 10:04
L9	1,507	B02C2/06.cpc.	US-PGPUB; USPAT; USOCR; FPRS; EPO; JPO; DERWENT; IBM_TDB	OR	ON	2021/02/14 10:04
L10	1,834	B02C2/04.cpc.	US-PGPUB; USPAT; USOCR; FPRS; EPO; JPO; DERWENT; IBM_TDB	OR	ON	2021/02/14 10:05
L11	953	(241/207-209).CCLS.	US-PGPUB; USPAT; USOCR; FPRS; EPO; JPO; DERWENT; IBM_TDB	OR	OFF	2021/02/14 10:05
L12	35	11 and ((oil or lubric$4) near5 (groove or channel))	US-PGPUB; USPAT; USOCR; FPRS; EPO; JPO; DERWENT; IBM_TDB	OR	ON	2021/02/14 10:05
L13	16	B02C2/02.cpc. and ((oil or lubric$4) near5 (groove or channel))	US-PGPUB; USPAT; USOCR; FPRS; EPO; JPO; DERWENT; IBM_TDB	OR	ON	2021/02/14 10:06

L14	84	B02C2/04.cpc. and ((oil or lubric$4) near5 (groove or channel))	US-PGPUB; USPAT; USOCR; FPRS; EPO; JPO; DERWENT; IBM_TDB	OR	ON	2021/02/14 10:06
S1	8	("1402255" | "1592313" | "1748102" | "20020088885" | "3456889" | "3813047" | "4027825" | "5934583").PN.	US-PGPUB; USPAT	OR	ON	2018/09/17 17:57
S2	57	((("BERGMAN") near3 ("Axel"))).INV.	US-PGPUB; USPAT; USOCR	OR	ON	2018/09/17 17:58
S3	21	((("LARSSON") near3 ("Mikael") near3 ("M"))).INV.	US-PGPUB; USPAT; USOCR	OR	ON	2018/09/17 17:58
S4	31	((("MALMQVIST") near3 ("Patric"))).INV.	US-PGPUB; USPAT; USOCR	OR	ON	2018/09/17 17:58
S5	39	((("HALLBERG") near3 ("Anders"))).INV.	US-PGPUB; USPAT; USOCR	OR	ON	2018/09/17 17:58
S6	2	((("NILSSON") near3 ("Matts-Ake"))).INV.	US-PGPUB; USPAT; USOCR	OR	ON	2018/09/17 17:58
S7	23	((("ERIKSSON") near3 ("Fredrik"))).INV.	US-PGPUB; USPAT; USOCR	OR	ON	2018/09/17 17:58
S8	54	((("ERIKSSON") near3 ("Bengt-Arne"))).INV.	US-PGPUB; USPAT; USOCR	OR	ON	2018/09/17 17:59
S9	1	((("HOLOMBERG") near3 ("Anne"))).INV.	US-PGPUB; USPAT; USOCR	OR	ON	2018/09/17 17:59
S10	1,318	B02C2/06.cpc.	US-PGPUB; USPAT; USOCR; FPRS; EPO; JPO; DERWENT; IBM_TDB	OR	ON	2018/09/17 18:00
S11	1,363	B02C2/04.cpc.	US-PGPUB; USPAT; USOCR; FPRS; EPO; JPO; DERWENT; IBM_TDB	OR	ON	2018/09/17 18:00
S12	189	B02C2/02.cpc.	US-PGPUB; USPAT; USOCR; FPRS; EPO; JPO; DERWENT; IBM_TDB	OR	ON	2018/09/17 18:00
S13	947	(241/207-209).CCLS.	US-PGPUB; USPAT; USOCR; FPRS; EPO; JPO; DERWENT; IBM_TDB	OR	OFF	2018/09/19 13:41
S14	35	S13 and ((oil or lubric$4) near5 (groove or channel))	US-PGPUB; USPAT; USOCR; FPRS;	OR	ON	2018/09/19 13:48

			EPO; JPO; DERWENT; IBM_TDB			
S15	0	((("BERGMAN") near3 ("Axel"))).INV. and ((oil or lubric$4) near5 (groove or channel))	US-PGPUB; USPAT; USOCR	OR	ON	2018/09/19 15:33
S16	2	((("BERGMAN") near3 ("Axel"))).INV. and (oil or lubric$4)	US-PGPUB; USPAT; USOCR	OR	ON	2018/09/19 15:33
S17	0	((("LARSSON") near3 ("Mikael") near3 ("M"))).INV. and ((oil or lubric$4) near5 (groove or channel))	US-PGPUB; USPAT; USOCR	OR	ON	2018/09/19 15:33
S18	1	((("LARSSON") near3 ("Mikael") near3 ("M"))).INV. and (oil or lubric$4)	US-PGPUB; USPAT; USOCR	OR	ON	2018/09/19 15:34
S19	2	((("MALMQVIST") near3 ("Patric"))).INV. and (oil or lubric$4)	US-PGPUB; USPAT; USOCR	OR	ON	2018/09/19 15:34
S20	11	((("ERIKSSON") near3 ("Fredrik"))).INV. and (oil or lubric$4)	US-PGPUB; USPAT; USOCR	OR	ON	2018/09/19 15:35
S21	17	((("ERIKSSON") near3 ("Bengt-Arne"))).INV. and (oil or lubric$4)	US-PGPUB; USPAT; USOCR	OR	ON	2018/09/19 15:35
S22	13	B02C2/02.cpc. and ((oil or lubric$4) near5 (groove or channel))	US-PGPUB; USPAT; USOCR; FPRS; EPO; JPO; DERWENT; IBM_TDB	OR	ON	2018/09/19 15:37
S23	61	B02C2/04.cpc. and ((oil or lubric$4) near5 (groove or channel))	US-PGPUB; USPAT; USOCR; FPRS; EPO; JPO; DERWENT; IBM_TDB	OR	ON	2018/09/19 15:38
S24	60	((("BERGMAN") near3 ("Axel"))).INV.	US-PGPUB; USPAT; USOCR	OR	ON	2019/03/18 11:24
S25	24	((("LARSSON") near3 ("Mikael") near3 ("M"))).INV.	US-PGPUB; USPAT; USOCR	OR	ON	2019/03/18 11:24
S26	34	((("MALMQVIST") near3 ("Patric"))).INV.	US-PGPUB; USPAT; USOCR	OR	ON	2019/03/18 11:24
S27	39	((("HALLBERG") near3 ("Anders"))).INV.	US-PGPUB; USPAT; USOCR	OR	ON	2019/03/18 11:24
S28	2	((("NILSSON") near3 ("Matts-Ake"))).INV.	US-PGPUB; USPAT; USOCR	OR	ON	2019/03/18 11:25

S29	25	((("ERIKSSON") near3 ("Fredrik"))).INV.	US-PGPUB; USPAT; USOCR	OR	ON	2019/03/18 11:25
S30	57	((("ERIKSSON") near3 ("Bengt-Arne"))).INV.	US-PGPUB; USPAT; USOCR	OR	ON	2019/03/18 11:25
S31	1	((("HOLOMBERG") near3 ("Anne"))).INV.	US-PGPUB; USPAT; USOCR	OR	ON	2019/03/18 11:25
S32	1,402	B02C2/06.cpc.	US-PGPUB; USPAT; USOCR; FPRS; EPO; JPO; DERWENT; IBM_TDB	OR	ON	2019/03/18 11:26
S33	1,511	B02C2/04.cpc.	US-PGPUB; USPAT; USOCR; FPRS; EPO; JPO; DERWENT; IBM_TDB	OR	ON	2019/03/18 11:26
S34	250	B02C2/02.cpc.	US-PGPUB; USPAT; USOCR; FPRS; EPO; JPO; DERWENT; IBM_TDB	OR	ON	2019/03/18 11:26
S35	958	(241/207-209).CCLS.	US-PGPUB; USPAT; USOCR; FPRS; EPO; JPO; DERWENT; IBM_TDB	OR	OFF	2019/03/18 11:27
S36	35	S35 and ((oil or lubric$4) near5 (groove or channel))	US-PGPUB; USPAT; USOCR; FPRS; EPO; JPO; DERWENT; IBM_TDB	OR	ON	2019/03/18 11:27
S37	9	("2916218" | "20090008489" | "3891153" | "5718391" | "5944265" | "6213418" | "7048214" | "7922109" | "RE27970").PN.	US-PGPUB; USPAT	OR	ON	2019/03/18 11:37

2/14/2021 10:24:51 AM
C:\Users\ffrancis\Documents\EAST\Workspaces\15035774.wsp

UNITED STATES PATENT AND TRADEMARK OFFICE

UNITED STATES DEPARTMENT OF COMMERCE
United States Patent and Trademark Office
Address: COMMISSIONER FOR PATENTS
P.O. Box 1450
Alexandria, Virginia 22313-1450
www.uspto.gov

BIB DATA SHEET

CONFIRMATION NO. 3999

SERIAL NUMBER	FILING or 371(c) DATE	CLASS	GROUP ART UNIT	ATTORNEY DOCKET NO.
15/035,774	05/11/2016 RULE	241	3725	SC 14208WOUS

APPLICANTS

SANDVIK INTELECTUAL PROPERTY AB, Sandviken, SWEDEN;

INVENTORS

Axel BERGMAN, Malmo, SWEDEN;
Mikael M LARSSON, Eslov, SWEDEN;
Patric MALMQVIST, Svedala, SWEDEN;
Anders HALLBERG, Sodra Sandby, SWEDEN;
Matts-Ake NILSSON, Gards Kopinge, SWEDEN;
Fredrik ERIKSSON, Malmo, SWEDEN;
Bengt-Arne ERIKSSON, Svedala, SWEDEN;
Anne HOLMBERG, Loddekopinge, SWEDEN;

**** CONTINUING DATA ***************************

This application is a 371 of PCT/EP2014/060594 05/23/2014

**** FOREIGN APPLICATIONS ***************************

EUROPEAN PATENT OFFICE (EPO) 13192402.9 11/12/2013

**** IF REQUIRED, FOREIGN FILING LICENSE GRANTED ****

Foreign Priority claimed ☑ Yes ☐ No 35 USC 119(a-d) conditions met ☑ Yes ☐ No Verified and Acknowledged /FAYE FRANCIS/ Examiner's Signature	☐ Met after Allowance Initials	STATE OR COUNTRY	SHEETS DRAWINGS	TOTAL CLAIMS	INDEPENDENT CLAIMS
		SWEDEN	6	14	1

ADDRESS

Sandvik Intellectual Property
3200 Highlands Parkway SE
#200
Smyrna, GA 30082
UNITED STATES

TITLE

GYRATORY CRUSHER MAIN SHAFT AND ASSEMBLY

FILING FEE RECEIVED		
1620	FEES: Authority has been given in Paper No._____ to charge/credit DEPOSIT ACCOUNT No._____ for following:	☐ All Fees ☐ 1.16 Fees (Filing) ☐ 1.17 Fees (Processing Ext. of time) ☐ 1.18 Fees (Issue) ☐ Other _____ ☐ Credit

UNITED STATES PATENT AND TRADEMARK OFFICE

UNITED STATES DEPARTMENT OF COMMERCE
United States Patent and Trademark Office
Address: COMMISSIONER FOR PATENTS
P.O. Box 1450
Alexandria, Virginia 22313-1450
www.uspto.gov

APPLICATION NO.	FILING DATE	FIRST NAMED INVENTOR	ATTORNEY DOCKET NO.	CONFIRMATION NO.
15/035,774	05/11/2016	Axel BERGMAN	SC 14208WOUS	3999

78686 7590 02/25/2021

Sandvik Intellectual Property
3200 Highlands Parkway SE
#200
Smyrna, GA 30082

EXAMINER
FRANCIS, FAYE

ART UNIT	PAPER NUMBER
3725	

NOTIFICATION DATE	DELIVERY MODE
02/25/2021	ELECTRONIC

Please find below and/or attached an Office communication concerning this application or proceeding.

The time period for reply, if any, is set in the attached communication.

Notice of the Office communication was sent electronically on above-indicated "Notification Date" to the following e-mail address(es):

corinne.gorski@sandvik.com
patents@sandvik.com

UNITED STATES PATENT AND TRADEMARK OFFICE

Commissioner for Patents
United States Patent and Trademark Office
P.O. Box 1450
Alexandria, VA 22313-1450
www.uspto.gov

In re Application of	:	
Axel Bergman, et al.	:	
Application No. 15/035,774	:	DECISION GRANTING PETITION
Filed: May 11, 2016	:	UNDER 37 CFR 1.313(c)(2)
Attorney Docket No. **SC 14208WOUS**	:	

This is a decision on the petition under 37 CFR 1.313(c)(2), filed October 22, 2020, to withdraw the above-identified application from issue after payment of the issue fee.

The petition is **GRANTED**.

The above-identified application is withdrawn from issue for consideration of a submission under 37 CFR 1.114 (request for continued examination). *See* 37 CFR 1.313(c)(2). The request for continued examination and request under 37 CFR 1.48(f) with petition has been already been considered by the technology center.

Petitioner is advised that the issue fee paid on May 28, 2019, cannot be refunded. However, petitioner may request that it be applied towards the issue fee required by the new Notice of Allowance.[1]

This application is being retained in the Office of Data Management to await the response to the Notice of Allowance mailed February 22, 2021.

Telephone inquiries should be directed to JoAnne Burke at (571) 272-4584.

/JoAnne L. Burke/
JoAnne L Burke
Lead Paralegal Specialist
Office of Petitions

[1] *The request to apply the issue fee to the new Notice may be satisfied by completing and returning the new Part B – Fee(s) Transmittal Form (along with any balance due at the time of submission). Petitioner is advised that the Issue Fee Transmittal Form* ***must*** *be completed and timely submitted to avoid abandonment of the application.*

Best Available Copy

PART B - FEE(S) TRANSMITTAL

Complete and send this form, together with applicable fee(s), by mail or fax, or via EFS-Web.

By mail, send to: Mail Stop ISSUE FEE
Commissioner for Patents
P.O. Box 1450
Alexandria, Virginia 22313-1450

By fax, send to: (571)-273-2885

USPTO MAIL ROOM AKIMA-7 APR 22 2021

INSTRUCTIONS: This form should be used for transmitting the ISSUE FEE and PUBLICATION FEE (if required). Blocks 1 through 5 should be completed where appropriate. All further correspondence including the Patent, advance orders and notification of maintenance fees will be mailed to the current correspondence address as indicated unless corrected below or directed otherwise in Block 1, by (a) specifying a new correspondence address; and/or (b) indicating a separate "FEE ADDRESS" for maintenance fee notifications.

CURRENT CORRESPONDENCE ADDRESS (Note: Use Block 1 for any change of address)

78686 7590 02/22/2021
Sandvik Intellectual Property
3200 Highlands Parkway SE
#200
Smyrna, GA 30082

Note: A certificate of mailing can only be used for domestic mailings of the Fee(s) Transmittal. This certificate cannot be used for any other accompanying papers. Each additional paper, such as an assignment or formal drawing, must have its own certificate of mailing or transmission.

Certificate of Mailing or Transmission

I hereby certify that this Fee(s) Transmittal is being deposited with the United States Postal Service with sufficient postage for first class mail in an envelope addressed to the Mail Stop ISSUE FEE address above, or being transmitted to the USPTO via EFS-Web or by facsimile to (571) 273-2885, on the date below.

(Typed or printed name)
(Signature)
(Date)

APPLICATION NO.	FILING DATE	FIRST NAMED INVENTOR	ATTORNEY DOCKET NO.	CONFIRMATION NO.
15/035,774	05/11/2016	Axel BERGMAN	SC 14208WOUS	3999

TITLE OF INVENTION: GYRATORY CRUSHER MAIN SHAFT AND ASSEMBLY

APPLN. TYPE	ENTITY STATUS	ISSUE FEE DUE	PUBLICATION FEE DUE	PREV. PAID ISSUE FEE	TOTAL FEE(S) DUE	DATE DUE
nonprovisional	UNDISCOUNTED	$1200	$0.00	$1000.00	$200	05/24/2021

EXAMINER	ART UNIT	CLASS-SUBCLASS
FRANCIS, FAYE	3725	241-209000

1. Change of correspondence address or indication of "Fee Address" (37 CFR 1.363).

☐ Change of correspondence address (or Change of Correspondence Address form PTO/SB/122) attached.

☐ "Fee Address" indication (or "Fee Address" Indication form PTO/SB/47; Rev 03-09 or more recent) attached. **Use of a Customer Number is required.**

2. For printing on the patent front page, list
(1) The names of up to 3 registered patent attorneys or agents OR, alternatively,
(2) The name of a single firm (having as a member a registered attorney or agent) and the names of up to 2 registered patent attorneys or agents. If no name is listed, no name will be printed.

1 Corinne R. Gorski
2
3

3. ASSIGNEE NAME AND RESIDENCE DATA TO BE PRINTED ON THE PATENT (print or type)

PLEASE NOTE: Unless an assignee is identified below, no assignee data will appear on the patent. If an assignee is identified below, the document must have been previously recorded, or filed for recordation, as set forth in 37 CFR 3.11 and 37 CFR 3.81(a). Completion of this form is NOT a substitute for filing an assignment.

(A) NAME OF ASSIGNEE: SANDVIK INTELLECTUAL PROPERTY AB

(B) RESIDENCE: (CITY and STATE OR COUNTRY): Sandviken, SE

Please check the appropriate assignee category or categories (will not be printed on the patent) : ☐ Individual ☒ Corporation or other private group entity ☐ Government

4a. Fees submitted: ☒ Issue Fee ☐ Publication Fee (if required) ☐ Advance Order - # of Copies _____

4b. Method of Payment: *(Please first reapply any previously paid fee shown above)*

☒ Electronic Payment via EFS-Web ☐ Enclosed check ☐ Non-electronic payment by credit card (Attach form PTO-2038)

☐ The Director is hereby authorized to charge the required fee(s), any deficiency, or credit any overpayment to Deposit Account No. 505792

5. **Change in Entity Status** (from status indicated above)

☐ Applicant certifying micro entity status. See 37 CFR 1.29

☐ Applicant asserting small entity status. See 37 CFR 1.27

☐ Applicant changing to regular undiscounted fee status.

NOTE: Absent a valid certification of Micro Entity Status (see forms PTO/SB/15A and 15B), issue fee payment in the micro entity amount will not be accepted at the risk of application abandonment.
NOTE: If the application was previously under micro entity status, checking this box will be taken to be a notification of loss of entitlement to micro entity status.
NOTE: Checking this box will be taken to be a notification of loss of entitlement to small or micro entity status, as applicable.

NOTE: This form must be signed in accordance with 37 CFR 1.31 and 1.33. See 37 CFR 1.4 for signature requirements and certifications.

Authorized Signature /Corinne R. Gorski/ Date April 22, 2021

Typed or printed name Corinne R. Gorski Registration No. 34,339

PART B - FEE(S) TRANSMITTAL

Complete and send this form, together with applicable fee(s), by mail or fax, or via EFS-Web.

By mail, send to: Mail Stop ISSUE FEE
Commissioner for Patents
P.O. Box 1450
Alexandria, Virginia 22313-1450

By fax, send to: (571)-273-2885

INSTRUCTIONS: This form should be used for transmitting the ISSUE FEE and PUBLICATION FEE (if required). Blocks 1 through 5 should be completed where appropriate. All further correspondence including the Patent, advance orders and notification of maintenance fees will be mailed to the current correspondence address as indicated unless corrected below or directed otherwise in Block 1, by (a) specifying a new correspondence address; and/or (b) indicating a separate "FEE ADDRESS" for maintenance fee notifications.

CURRENT CORRESPONDENCE ADDRESS (Note: Use Block 1 for any change of address)

78686 7590 02/22/2021
Sandvik Intellectual Property
3200 Highlands Parkway SE
#200
Smyrna, GA 30082

Note: A certificate of mailing can only be used for domestic mailings of the Fee(s) Transmittal. This certificate cannot be used for any other accompanying papers. Each additional paper, such as an assignment or formal drawing, must have its own certificate of mailing or transmission.

Certificate of Mailing or Transmission

I hereby certify that this Fee(s) Transmittal is being deposited with the United States Postal Service with sufficient postage for first class mail in an envelope addressed to the Mail Stop ISSUE FEE address above, or being transmitted to the USPTO via EFS-Web or by facsimile to (571) 273-2885, on the date below.

(Typed or printed name)
(Signature)
(Date)

APPLICATION NO.	FILING DATE	FIRST NAMED INVENTOR	ATTORNEY DOCKET NO.	CONFIRMATION NO.
15/035,774	05/11/2016	Axel BERGMAN	SC 14208WOUS	3999

TITLE OF INVENTION: GYRATORY CRUSHER MAIN SHAFT AND ASSEMBLY

APPLN. TYPE	ENTITY STATUS	ISSUE FEE DUE	PUBLICATION FEE DUE	PREV. PAID ISSUE FEE	TOTAL FEE(S) DUE	DATE DUE
nonprovisional	UNDISCOUNTED	$1200	$0.00	$1000.00	$200	05/24/2021

EXAMINER	ART UNIT	CLASS-SUBCLASS
FRANCIS, FAYE	3725	241-209000

1. Change of correspondence address or indication of "Fee Address" (37 CFR 1.363).

☐ Change of correspondence address (or Change of Correspondence Address form PTO/SB/122) attached.

☐ "Fee Address" indication (or "Fee Address" Indication form PTO/SB/47; Rev 03-09 or more recent) attached. **Use of a Customer Number is required.**

2. For printing on the patent front page, list
(1) The names of up to 3 registered patent attorneys or agents OR, alternatively,
(2) The name of a single firm (having as a member a registered attorney or agent) and the names of up to 2 registered patent attorneys or agents. If no name is listed, no name will be printed.

1 Corinne R. Gorski
2
3

3. ASSIGNEE NAME AND RESIDENCE DATA TO BE PRINTED ON THE PATENT (print or type)

PLEASE NOTE: Unless an assignee is identified below, no assignee data will appear on the patent. If an assignee is identified below, the document must have been previously recorded, or filed for recordation, as set forth in 37 CFR 3.11 and 37 CFR 3.81(a). Completion of this form is NOT a substitute for filing an assignment.

(A) NAME OF ASSIGNEE: SANDVIK INTELLECTUAL PROPERTY AB

(B) RESIDENCE: (CITY and STATE OR COUNTRY): Sandviken, SE

Please check the appropriate assignee category or categories (will not be printed on the patent) : ☐ Individual ☒ Corporation or other private group entity ☐ Government

4a. Fees submitted: ☒ Issue Fee ☐ Publication Fee (if required) ☐ Advance Order - # of Copies _____

4b. Method of Payment: *(Please first reapply any previously paid fee shown above)*

☒ Electronic Payment via EFS-Web ☐ Enclosed check ☐ Non-electronic payment by credit card (Attach form PTO-2038)

☐ The Director is hereby authorized to charge the required fee(s), any deficiency, or credit any overpayment to Deposit Account No. 505792

5. **Change in Entity Status** (from status indicated above)

☐ Applicant certifying micro entity status. See 37 CFR 1.29

☐ Applicant asserting small entity status. See 37 CFR 1.27

☐ Applicant changing to regular undiscounted fee status.

NOTE: Absent a valid certification of Micro Entity Status (see forms PTO/SB/15A and 15B), issue fee payment in the micro entity amount will not be accepted at the risk of application abandonment.
NOTE: If the application was previously under micro entity status, checking this box will be taken to be a notification of loss of entitlement to micro entity status.
NOTE: Checking this box will be taken to be a notification of loss of entitlement to small or micro entity status, as applicable.

NOTE: This form must be signed in accordance with 37 CFR 1.31 and 1.33. See 37 CFR 1.4 for signature requirements and certifications.

Authorized Signature /Corinne R. Gorski/ Date April 22, 2021

Typed or printed name Corinne R. Gorski Registration No. 34,339

PTO/SB/17 (10-20)
Approved for use through 12/31/2020. OMB 0651-0032
U.S. Patent and Trademark Office; U.S. DEPARTMENT OF COMMERCE
Under the Paperwork Reduction Act of 1995 no persons are required to respond to a collection of information unless it displays a valid OMB control number

FEE TRANSMITTAL

Complete if known	
Application Number	15/035,774
Filing Date	May 11, 2016
First Named Inventor	Axel BERGMAN
Examiner Name	Faye Francis
Art Unit	3725
Practitioner Docket No.	SC 14208WOUS

☐ Applicant asserts small entity status. See 37 CFR 1.27.

☐ Applicant certifies micro entity status. See 37 CFR 1.29. Form PTO/SB/15A or B or equivalent must either be enclosed or have been submitted previously.

TOTAL AMOUNT OF PAYMENT ($) 200.00

METHOD OF PAYMENT (check all that apply)

☐ Check ☐ Credit Card ☐ Money Order ☐ None ☐ Other (please identify): _____

☒ Deposit Account Deposit Account Number: 505782 Deposit Account Name: _____

For the above-identified deposit account, the Director is hereby authorized to (check all that apply):

☒ Charge fee(s) indicated below ☐ Charge fee(s) indicated below, **except for the filing fee**

☒ Charge any additional fee(s) or underpayment of fee(s) under 37 CFR 1.16 and 1.17 ☒ Credit any overpayment of fee(s)

WARNING: Information on this form may become public. Credit card information should not be included on this form. Provide credit card information and authorization on PTO-2038.

FEE CALCULATION

1. BASIC FILING, SEARCH, AND EXAMINATION FEES (U = undiscounted fee; S = small entity fee; M = micro entity fee)

	FILING FEES			SEARCH FEES			EXAMINATION FEES			
Application Type	**U ($)**	**S ($)**	**M ($)**	**U ($)**	**S ($)**	**M ($)**	**U ($)**	**S ($)**	**M ($)**	**Fees Paid ($)**
Utility	320	160*	80	700	350	175	800	400	200	
Design	220	110	55	160	80	40	640	320	160	
Plant	220	110	55	440	220	110	660	330	165	
Reissue	320	160	80	700	350	175	2,320	1,160	580	
Provisional	300	150	75	0	0	0	0	0	0	

* The $160 small entity status filing fee for a utility application is further reduced to $80 for a small entity status applicant who files the application via EFS-Web.

2. EXCESS CLAIM FEES

Fee Description	**Undiscounted Fee ($)**	**Small Entity Fee ($)**	**Micro Entity Fee ($)**
Each claim over 20 (including Reissues)	100	50	25
Each independent claim over 3 (including Reissues)	480	240	120
Multiple dependent claims	860	430	215

Total Claims		**Extra Claims**	**Fee ($)**		**Fee Paid ($)**
_____	-20 or HP =	_____ x	_____	=	_____

HP = highest number of total claims paid for, if greater than 20.

Indep. Claims		**Extra Claims**	**Fee ($)**		**Fee Paid ($)**
_____	-3 or HP =	_____ x	_____	=	_____

HP = highest number of independent claims paid for, if greater than 3.

Multiple Dependent Claims	
Fee ($)	**Fee Paid ($)**
_____	_____

3. APPLICATION SIZE FEE

If the specification and drawings exceed 100 sheets of paper (excluding electronically filed sequence or computer listings under 37 CFR 1.52(e)), the application size fee due is $420 ($210 for small entity) ($105 for micro entity) for each additional 50 sheets or fraction thereof. See 35 U.S.C. 41(a)(1)(G) and 37 CFR 1.16(s).

Total Sheets		**Extra Sheets**		**Number of each additional 50 or fraction thereof**		**Fee ($)**		**Fee Paid ($)**
_____	- 100 =	_____	/ 50 =	_____ (round **up** to a whole number)	x	_____	=	_____

4. OTHER FEE(S) **Fees Paid ($)**

Non-English specification, $140 fee ($70 for small entity) ($35 for micro entity) _____

Non-electronic filing fee under 37 CFR 1.16(t) for a utility application, $400 fee ($200 small or micro entity) _____

Other (e.g., late filing surcharge): $200 ADDITIONAL ALLOWANCE FEE ($1000 previously paid for) $200.00

SUBMITTED BY

Signature	/Corinne R. Gorski/	Registration No. (Attorney/Agent) 34339	Telephone (703) 505-4761
Name (Print/Type)	Corinne R. Gorski		Date April 22, 2021

This collection of information is required by 37 CFR 1.136. The information is required to obtain or retain a benefit by the public which is to file (and by the USPTO to process) an application. Confidentiality is governed by 35 U.S.C. 122 and 37 CFR 1.14. This collection is estimated to take 30 minutes to complete, including gathering, preparing, and submitting the completed application form to the USPTO. Time will vary depending upon the individual case. Any comments on the amount of time you require to complete this form and/or suggestions for reducing this burden, should be sent to the Chief Information Officer, U.S. Patent and Trademark Office, U.S. Department of Commerce, P.O. Box 1450, Alexandria, VA 22313-1450. DO NOT SEND FEES OR COMPLETED FORMS TO THIS ADDRESS. **SEND TO: Commissioner for Patents, P.O. Box 1450, Alexandria, VA 22313-1450.**

If you need assistance in completing the form, call 1-800-PTO-9199 and select option 2.

Privacy Act Statement

The **Privacy Act of 1974 (P.L. 93-579)** requires that you be given certain information in connection with your submission of the attached form related to a patent application or patent. Accordingly, pursuant to the requirements of the Act, please be advised that: (1) the general authority for the collection of this information is 35 U.S.C. 2(b)(2); (2) furnishing of the information solicited is voluntary; and (3) the principal purpose for which the information is used by the U.S. Patent and Trademark Office is to process and/or examine your submission related to a patent application or patent. If you do not furnish the requested information, the U.S. Patent and Trademark Office may not be able to process and/or examine your submission, which may result in termination of proceedings or abandonment of the application or expiration of the patent.

The information provided by you in this form will be subject to the following routine uses:

1. The information on this form will be treated confidentially to the extent allowed under the Freedom of Information Act (5 U.S.C. 552) and the Privacy Act (5 U.S.C 552a). Records from this system of records may be disclosed to the Department of Justice to determine whether disclosure of these records is required by the Freedom of Information Act.
2. A record from this system of records may be disclosed, as a routine use, in the course of presenting evidence to a court, magistrate, or administrative tribunal, including disclosures to opposing counsel in the course of settlement negotiations.
3. A record in this system of records may be disclosed, as a routine use, to a Member of Congress submitting a request involving an individual, to whom the record pertains, when the individual has requested assistance from the Member with respect to the subject matter of the record.
4. A record in this system of records may be disclosed, as a routine use, to a contractor of the Agency having need for the information in order to perform a contract. Recipients of information shall be required to comply with the requirements of the Privacy Act of 1974, as amended, pursuant to 5 U.S.C. 552a(m).
5. A record related to an International Application filed under the Patent Cooperation Treaty in this system of records may be disclosed, as a routine use, to the International Bureau of the World Intellectual Property Organization, pursuant to the Patent Cooperation Treaty.
6. A record in this system of records may be disclosed, as a routine use, to another federal agency for purposes of National Security review (35 U.S.C. 181) and for review pursuant to the Atomic Energy Act (42 U.S.C. 218(c)).
7. A record from this system of records may be disclosed, as a routine use, to the Administrator, General Services, or his/her designee, during an inspection of records conducted by GSA as part of that agency's responsibility to recommend improvements in records management practices and programs, under authority of 44 U.S.C. 2904 and 2906. Such disclosure shall be made in accordance with the GSA regulations governing inspection of records for this purpose, and any other relevant (*i.e.*, GSA or Commerce) directive. Such disclosure shall not be used to make determinations about individuals.
8. A record from this system of records may be disclosed, as a routine use, to the public after either publication of the application pursuant to 35 U.S.C. 122(b) or issuance of a patent pursuant to 35 U.S.C. 151. Further, a record may be disclosed, subject to the limitations of 37 CFR 1.14, as a routine use, to the public if the record was filed in an application which became abandoned or in which the proceedings were terminated and which application is referenced by either a published application, an application open to public inspection or an issued patent.
9. A record from this system of records may be disclosed, as a routine use, to a Federal, State, or local law enforcement agency, if the USPTO becomes aware of a violation or potential violation of law or regulation.

Electronic Acknowledgement Receipt

EFS ID:	42524714
Application Number:	15035774
International Application Number:	
Confirmation Number:	3999
Title of Invention:	GYRATORY CRUSHER MAIN SHAFT AND ASSEMBLY
First Named Inventor/Applicant Name:	Axel BERGMAN
Customer Number:	78686
Filer:	Corinne R. Gorski
Filer Authorized By:	
Attorney Docket Number:	SC 14208WOUS
Receipt Date:	22-APR-2021
Filing Date:	11-MAY-2016
Time Stamp:	14:10:25
Application Type:	U.S. National Stage under 35 USC 371

Payment information:

Submitted with Payment	no

File Listing:

Document Number	Document Description	File Name	File Size(Bytes)/ Message Digest	Multi Part /.zip	Pages (if appl.)
1	Issue Fee Payment (PTO-85B)	14208WOUSIssueFeePartB.pdf	131143 9f7293f2b87c798136148ddba7e0180b6f7bc881	no	1

Warnings:

Information:					
2	Issue Fee Payment (PTO-85B)	14208WOUSsb0017.pdf	270530 f961959bec9c6dcb67dbe968b7f99bb3d42939b0	no	2
Warnings:					
Information:					
		Total Files Size (in bytes):	401673		

This Acknowledgement Receipt evidences receipt on the noted date by the USPTO of the indicated documents, characterized by the applicant, and including page counts, where applicable. It serves as evidence of receipt similar to a Post Card, as described in MPEP 503.

New Applications Under 35 U.S.C. 111

If a new application is being filed and the application includes the necessary components for a filing date (see 37 CFR 1.53(b)-(d) and MPEP 506), a Filing Receipt (37 CFR 1.54) will be issued in due course and the date shown on this Acknowledgement Receipt will establish the filing date of the application.

National Stage of an International Application under 35 U.S.C. 371

If a timely submission to enter the national stage of an international application is compliant with the conditions of 35 U.S.C. 371 and other applicable requirements a Form PCT/DO/EO/903 indicating acceptance of the application as a national stage submission under 35 U.S.C. 371 will be issued in addition to the Filing Receipt, in due course.

New International Application Filed with the USPTO as a Receiving Office

If a new international application is being filed and the international application includes the necessary components for an international filing date (see PCT Article 11 and MPEP 1810), a Notification of the International Application Number and of the International Filing Date (Form PCT/RO/105) will be issued in due course, subject to prescriptions concerning national security, and the date shown on this Acknowledgement Receipt will establish the international filing date of the application.

United States Patent and Trademark Office

Office of the Chief Financial Officer

Document Code:WFEE

User :C46167

Sale Adjustment Accounting Date:04/23/2021

Effective Date	Sale Accounting Date	Sale Item Reference Number
05/28/2019	04/23/2021	15035774

Document Number	Fee Code	Fee Code Description	Amount Paid	Payment Method
I20214M825103283	1501	UTILITY APPL ISSUE FEE	$1,000.00	DA

United States Patent and Trademark Office

Office of the Chief Financial Officer

Document Code:WFEE

User :C46167

Refund Accounting Date:04/23/2021

Effective Date	Sale Item Reference Number	Refund Total
05/28/2019	15035774	$1,000.00

Document Number	Fee Code	Fee Code Description	Amount Paid	Payment Method	Account Number
I20214M825103283	1501	UTILITY APPL ISSUE FEE	$1,000.00	DA	505792

United States Patent and Trademark Office

Office of the Chief Financial Officer

Document Code:WFEE

User :C46167

Sale Accounting Date:04/23/2021

Sale Item Reference Number	Effective Date
15035774	04/22/2021

Document Number	Fee Code	Fee Code Description	Amount Paid	Payment Method
I20214M828573310	1501	UTILITY APPL ISSUE FEE	$1,200.00	Deposit Account

UNITED STATES PATENT AND TRADEMARK OFFICE

UNITED STATES DEPARTMENT OF COMMERCE
United States Patent and Trademark Office
Address: COMMISSIONER FOR PATENTS
P.O. Box 1450
Alexandria, Virginia 22313-1450
www.uspto.gov

APPLICATION NO.	ISSUE DATE	PATENT NO.	ATTORNEY DOCKET NO.	CONFIRMATION NO.
15/035,774	05/25/2021	11014090	SC 14208WOUS	3999

78686 7590 05/05/2021

Sandvik Intellectual Property
3200 Highlands Parkway SE
#200
Smyrna, GA 30082

ISSUE NOTIFICATION

The projected patent number and issue date are specified above.

Determination of Patent Term Adjustment under 35 U.S.C. 154 (b)
(application filed on or after May 29, 2000)

The Patent Term Adjustment is 348 day(s). Any patent to issue from the above-identified application will include an indication of the adjustment on the front page.

If a Continued Prosecution Application (CPA) was filed in the above-identified application, the filing date that determines Patent Term Adjustment is the filing date of the most recent CPA.

Applicant will be able to obtain more detailed information by accessing the Patent Application Information Retrieval (PAIR) WEB site (http://pair.uspto.gov).

Any questions regarding the Patent Term Extension or Adjustment determination should be directed to the Office of Patent Legal Administration at (571)-272-7702. Questions relating to issue and publication fee payments should be directed to the Application Assistance Unit (AAU) of the Office of Data Management (ODM) at (571)-272-4200.

APPLICANT(s) (Please see PAIR WEB site http://pair.uspto.gov for additional applicants):

Axel BERGMAN, Malmo, SWEDEN;
SANDVIK INTELECTUAL PROPERTY AB, Sandviken, SWEDEN;
Mikael M LARSSON, Eslov, SWEDEN;
Patric MALMQVIST, Svedala, SWEDEN;
Anders HALLBERG, Sodra Sandby, SWEDEN;
Matts-Ake NILSSON, Gards Kopinge, SWEDEN;
Fredrik ERIKSSON, Malmo, SWEDEN;
Bengt-Arne ERIKSSON, Svedala, SWEDEN;
Anne HOLMBERG, Loddekopinge, SWEDEN;

The United States represents the largest, most dynamic marketplace in the world and is an unparalleled location for business investment, innovation, and commercialization of new technologies. The USA offers tremendous resources and advantages for those who invest and manufacture goods here. Through SelectUSA, our nation works to encourage and facilitate business investment. To learn more about why the USA is the best country in the world to develop technology, manufacture products, and grow your business, visit SelectUSA.gov.