PTO/AIA/14 (11-15)
Approved for use through 04/30/2017. OMB 0651-0032
U.S. Patent and Trademark Office; U.S. DEPARTMENT OF COMMERCE
Under the Paperwork Reduction Act of 1995, no persons are required to respond to a collection of information unless it contains a valid OMB control number.

Application Data Sheet 37 CFR 1.76	Attorney Docket Number	771/13569.451
	Application Number	
Title of Invention	MODULAR FIBRE OPTIC CASSETTE, SYSTEM AND METHOD	

The application data sheet is part of the provisional or nonprovisional application for which it is being submitted. The following form contains the bibliographic data arranged in a format specified by the United States Patent and Trademark Office as outlined in 37 CFR 1.76.
This document may be completed electronically and submitted to the Office in electronic format using the Electronic Filing System (EFS) or the document may be printed and included in a paper filed application.

Secrecy Order 37 CFR 5.2:

☐ Portions or all of the application associated with this Application Data Sheet may fall under a Secrecy Order pursuant to 37 CFR 5.2 (Paper filers only. Applications that fall under Secrecy Order may not be filed electronically.)

Inventor Information:

Inventor 1 Remove

Legal Name

Prefix	Given Name	Middle Name	Family Name	Suffix
	VINCENT		PILON	

Residence Information (Select One) US Residency ● Non US Residency Active US Military Service

City	LACHINE	Country of Residence i	CA

Mailing Address of Inventor:

Address 1	350 40e AVENUE		
Address 2			
City	LACHINE	**State/Province**	QC
Postal Code	H8T 2G6	**Country** i	CA

All Inventors Must Be Listed - Additional Inventor Information blocks may be generated within this form by selecting the **Add** button. Add

Correspondence Information:

Enter either Customer Number or complete the Correspondence Information section below.
For further information see 37 CFR 1.33(a).

☐ **An Address is being provided for the correspondence Information of this application.**

Customer Number	25545		
Email Address	hmansfield@lavery.ca	Add Email	Remove Email
Email Address	afovero@lavery.ca	Add Email	Remove Email

Application Information:

Title of the Invention	MODULAR FIBRE OPTIC CASSETTE, SYSTEM AND METHOD		
Attorney Docket Number	771/13569.451	**Small Entity Status Claimed**	☐
Application Type	Nonprovisional		
Subject Matter	Utility		
Total Number of Drawing Sheets (if any)	13	**Suggested Figure for Publication (if any)**	

EFS Web 2.2.12

 CommScope Ex. 1007

Under the Paperwork Reduction Act of 1995, no persons are required to respond to a collection of information unless it contains a valid OMB control number.

Application Data Sheet 37 CFR 1.76	Attorney Docket Number	771/13569.451
	Application Number	
Title of Invention	MODULAR FIBRE OPTIC CASSETTE, SYSTEM AND METHOD	

Filing By Reference:

Only complete this section when filing an application by reference under 35 U.S.C. 111(c) and 37 CFR 1.57(a). Do not complete this section if application papers including a specification and any drawings are being filed. Any domestic benefit or foreign priority information must be provided in the appropriate section(s) below (i.e., "Domestic Benefit/National Stage Information" and "Foreign Priority Information").

For the purposes of a filing date under 37 CFR 1.53(b), the description and any drawings of the present application are replaced by this reference to the previously filed application, subject to conditions and requirements of 37 CFR 1.57(a).

Application number of the previously filed application	Filing date (YYYY-MM-DD)	Intellectual Property Authority or Country

Publication Information:

☐ Request Early Publication (Fee required at time of Request 37 CFR 1.219)

☐ **Request Not to Publish.** I hereby request that the attached application not be published under 35 U.S.C. 122(b) and certify that the invention disclosed in the attached application **has not and will not** be the subject of an application filed in another country, or under a multilateral international agreement, that requires publication at eighteen months after filing.

Representative Information:

Representative information should be provided for all practitioners having a power of attorney in the application. Providing this information in the Application Data Sheet does not constitute a power of attorney in the application (see 37 CFR 1.32).
Either enter Customer Number or complete the Representative Name section below. If both sections are completed the customer Number will be used for the Representative Information during processing.

Please Select One:	● Customer Number	US Patent Practitioner	○ Limited Recognition (37 CFR 11.9)
Customer Number	25545		

Domestic Benefit/National Stage Information:

This section allows for the applicant to either claim benefit under 35 U.S.C. 119(e), 120, 121, 365(c), or 386(c) or indicate National Stage entry from a PCT application. Providing benefit claim information in the Application Data Sheet constitutes the specific reference required by 35 U.S.C. 119(e) or 120, and 37 CFR 1.78.
When referring to the current application, please leave the "Application Number" field blank.

Prior Application Status	Pending		Remove
Application Number	Continuity Type	Prior Application Number	Filing or 371(c) Date (YYYY-MM-DD)
	Claims benefit of provisional	62567339	2017-10-03

Additional Domestic Benefit/National Stage Data may be generated within this form by selecting the **Add** button. Add

Application Data Sheet 37 CFR 1.76	Attorney Docket Number	771/13569.451
	Application Number	
Title of Invention	MODULAR FIBRE OPTIC CASSETTE, SYSTEM AND METHOD	

Foreign Priority Information:

This section allows for the applicant to claim priority to a foreign application. Providing this information in the application data sheet constitutes the claim for priority as required by 35 U.S.C. 119(b) and 37 CFR 1.55. When priority is claimed to a foreign application that is eligible for retrieval under the priority document exchange program (PDX)[i] the information will be used by the Office to automatically attempt retrieval pursuant to 37 CFR 1.55(i)(1) and (2). Under the PDX program, applicant bears the ultimate responsibility for ensuring that a copy of the foreign application is received by the Office from the participating foreign intellectual property office, or a certified copy of the foreign priority application is filed, within the time period specified in 37 CFR 1.55(g)(1).

Remove

Application Number	Country[i]	Filing Date (YYYY-MM-DD)	Access Code[i] (if applicable)

Additional Foreign Priority Data may be generated within this form by selecting the **Add** button. Add

Statement under 37 CFR 1.55 or 1.78 for AIA (First Inventor to File) Transition Applications

☐ This application (1) claims priority to or the benefit of an application filed before March 16, 2013 and (2) also contains, or contained at any time, a claim to a claimed invention that has an effective filing date on or after March 16, 2013.
NOTE: By providing this statement under 37 CFR 1.55 or 1.78, this application, with a filing date on or after March 16, 2013, will be examined under the first inventor to file provisions of the AIA.

Application Data Sheet 37 CFR 1.76	Attorney Docket Number	771/13569.451
	Application Number	
Title of Invention	MODULAR FIBRE OPTIC CASSETTE, SYSTEM AND METHOD	

Authorization or Opt-Out of Authorization to Permit Access:

When this Application Data Sheet is properly signed and filed with the application, applicant has provided written authority to permit a participating foreign intellectual property (IP) office access to the instant application-as-filed (see paragraph A in subsection 1 below) and the European Patent Office (EPO) access to any search results from the instant application (see paragraph B in subsection 1 below).

Should applicant choose not to provide an authorization identified in subsection 1 below, applicant **must opt-out** of the authorization by checking the corresponding box A or B or both in subsection 2 below.

NOTE: This section of the Application Data Sheet is **ONLY** reviewed and processed with the **INITIAL** filing of an application. After the initial filing of an application, an Application Data Sheet cannot be used to provide or rescind authorization for access by a foreign IP office(s). Instead, Form PTO/SB/39 or PTO/SB/69 must be used as appropriate.

1. Authorization to Permit Access by a Foreign Intellectual Property Office(s)

A. Priority Document Exchange (PDX) - Unless box A in subsection 2 (opt-out of authorization) is checked, the undersigned hereby **grants the USPTO authority** to provide the European Patent Office (EPO), the Japan Patent Office (JPO), the Korean Intellectual Property Office (KIPO), the State Intellectual Property Office of the People's Republic of China (SIPO), the World Intellectual Property Organization (WIPO), and any other foreign intellectual property office participating with the USPTO in a bilateral or multilateral priority document exchange agreement in which a foreign application claiming priority to the instant patent application is filed, access to: (1) the instant patent application-as-filed and its related bibliographic data, (2) any foreign or domestic application to which priority or benefit is claimed by the instant application and its related bibliographic data, and (3) the date of filing of this Authorization. See 37 CFR 1.14(h)(1).

B. Search Results from U.S. Application to EPO - Unless box B in subsection 2 (opt-out of authorization) is checked, the undersigned hereby **grants the USPTO authority** to provide the EPO access to the bibliographic data and search results from the instant patent application when a European patent application claiming priority to the instant patent application is filed. See 37 CFR 1.14(h)(2).

The applicant is reminded that the EPO's Rule 141(1) EPC (European Patent Convention) requires applicants to submit a copy of search results from the instant application without delay in a European patent application that claims priority to the instant application.

2. Opt-Out of Authorizations to Permit Access by a Foreign Intellectual Property Office(s)

☐ A. Applicant **DOES NOT** authorize the USPTO to permit a participating foreign IP office access to the instant application-as-filed. If this box is checked, the USPTO will not be providing a participating foreign IP office with any documents and information identified in subsection 1A above.

☐ B. Applicant **DOES NOT** authorize the USPTO to transmit to the EPO any search results from the instant patent application. If this box is checked, the USPTO will not be providing the EPO with search results from the instant application.

NOTE: Once the application has published or is otherwise publicly available, the USPTO may provide access to the application in accordance with 37 CFR 1.14.

Under the Paperwork Reduction Act of 1995, no persons are required to respond to a collection of information unless it contains a valid OMB control number.

Application Data Sheet 37 CFR 1.76	Attorney Docket Number	771/13569.451
	Application Number	
Title of Invention	MODULAR FIBRE OPTIC CASSETTE, SYSTEM AND METHOD	

Applicant Information:

Providing assignment information in this section does not substitute for compliance with any requirement of part 3 of Title 37 of CFR to have an assignment recorded by the Office.

Applicant 1 Remove

If the applicant is the inventor (or the remaining joint inventor or inventors under 37 CFR 1.45), this section should not be completed. The information to be provided in this section is the name and address of the legal representative who is the applicant under 37 CFR 1.43; or the name and address of the assignee, person to whom the inventor is under an obligation to assign the invention, or person who otherwise shows sufficient proprietary interest in the matter who is the applicant under 37 CFR 1.46. If the applicant is an applicant under 37 CFR 1.46 (assignee, person to whom the inventor is obligated to assign, or person who otherwise shows sufficient proprietary interest) together with one or more joint inventors, then the joint inventor or inventors who are also the applicant should be identified in this section. Clear

● Assignee	Legal Representative under 35 U.S.C. 117	Joint Inventor
Person to whom the inventor is obligated to assign.	Person who shows sufficient proprietary interest	

If applicant is the legal representative, indicate the authority to file the patent application, the inventor is:

Name of the Deceased or Legally Incapacitated Inventor:

If the Applicant is an Organization check here. ☒

Organization Name	BELDEN CANADA INC.		
Mailing Address Information For Applicant:			
Address 1	2310 ALFRED-NOBEL		
Address 2			
City	SAINT-LAURENT	**State/Province**	QC
Country	CA	Postal Code	H4S 2B4
Phone Number		Fax Number	
Email Address			

Additional Applicant Data may be generated within this form by selecting the Add button. Add

Assignee Information including Non-Applicant Assignee Information:

Providing assignment information in this section does not substitute for compliance with any requirement of part 3 of Title 37 of CFR to have an assignment recorded by the Office.

Under the Paperwork Reduction Act of 1995, no persons are required to respond to a collection of information unless it contains a valid OMB control number.

Application Data Sheet 37 CFR 1.76	Attorney Docket Number	771/13569.451
	Application Number	
Title of Invention	MODULAR FIBRE OPTIC CASSETTE, SYSTEM AND METHOD	

Assignee 1

Complete this section if assignee information, including non-applicant assignee information, is desired to be included on the patent application publication. An assignee-applicant identified in the "Applicant Information" section will appear on the patent application publication as an applicant. For an assignee-applicant, complete this section only if identification as an assignee is also desired on the patent application publication.

Remove

If the Assignee or Non-Applicant Assignee is an Organization check here. ☐

Prefix	**Given Name**	Middle Name	**Family Name**	Suffix

Mailing Address Information For Assignee including Non-Applicant Assignee:

Address 1			
Address 2			
City		**State/Province**	
Country i		Postal Code	
Phone Number		Fax Number	
Email Address			

Additional Assignee or Non-Applicant Assignee Data may be generated within this form by selecting the Add button. Add

Signature:

Remove

NOTE: This Application Data Sheet must be signed in accordance with 37 CFR 1.33(b). **However, if this Application Data Sheet is submitted with the INITIAL filing of the application and either box A or B is not checked in subsection 2 of the "Authorization or Opt-Out of Authorization to Permit Access" section, then this form must also be signed in accordance with 37 CFR 1.14(c).**

This Application Data Sheet **must** be signed by a patent practitioner if one or more of the applicants is a **juristic entity** (e.g., corporation or association). If the applicant is two or more joint inventors, this form must be signed by a patent practitioner, **all** joint inventors who are the applicant, or one or more joint inventor-applicants who have been given power of attorney (e.g., see USPTO Form PTO/AIA/81) on behalf of **all** joint inventor-applicants.

See 37 CFR 1.4(d) for the manner of making signatures and certifications.

Signature	/HUGH MANSFIELD/			Date (YYYY-MM-DD)	2018-09-27
First Name	HUGH	Last Name	MANSFIELD	Registration Number	55757

Additional Signature may be generated within this form by selecting the Add button. Add

Application Data Sheet 37 CFR 1.76	Attorney Docket Number	771/13569.451
	Application Number	
Title of Invention	MODULAR FIBRE OPTIC CASSETTE, SYSTEM AND METHOD	

This collection of information is required by 37 CFR 1.76. The information is required to obtain or retain a benefit by the public which is to file (and by the USPTO to process) an application. Confidentiality is governed by 35 U.S.C. 122 and 37 CFR 1.14. This collection is estimated to take 23 minutes to complete, including gathering, preparing, and submitting the completed application data sheet form to the USPTO. Time will vary depending upon the individual case. Any comments on the amount of time you require to complete this form and/or suggestions for reducing this burden, should be sent to the Chief Information Officer, U.S. Patent and Trademark Office, U.S. Department of Commerce, P.O. Box 1450, Alexandria, VA 22313-1450. DO NOT SEND FEES OR COMPLETED FORMS TO THIS ADDRESS. **SEND TO: Commissioner for Patents, P.O. Box 1450, Alexandria, VA 22313-1450.**

Privacy Act Statement

The Privacy Act of 1974 (P.L. 93-579) requires that you be given certain information in connection with your submission of the attached form related to a patent application or patent. Accordingly, pursuant to the requirements of the Act, please be advised that: (1) the general authority for the collection of this information is 35 U.S.C. 2(b)(2); (2) furnishing of the information solicited is voluntary; and (3) the principal purpose for which the information is used by the U.S. Patent and Trademark Office is to process and/or examine your submission related to a patent application or patent. If you do not furnish the requested information, the U.S. Patent and Trademark Office may not be able to process and/or examine your submission, which may result in termination of proceedings or abandonment of the application or expiration of the patent.

The information provided by you in this form will be subject to the following routine uses:

1 The information on this form will be treated confidentially to the extent allowed under the Freedom of Information Act (5 U.S.C. 552) and the Privacy Act (5 U.S.C. 552a). Records from this system of records may be disclosed to the Department of Justice to determine whether the Freedom of Information Act requires disclosure of these records.

2. A record from this system of records may be disclosed, as a routine use, in the course of presenting evidence to a court, magistrate, or administrative tribunal, including disclosures to opposing counsel in the course of settlement negotiations.

3 A record in this system of records may be disclosed, as a routine use, to a Member of Congress submitting a request involving an individual, to whom the record pertains, when the individual has requested assistance from the Member with respect to the subject matter of the record.

4. A record in this system of records may be disclosed, as a routine use, to a contractor of the Agency having need for the information in order to perform a contract. Recipients of information shall be required to comply with the requirements of the Privacy Act of 1974, as amended, pursuant to 5 U.S.C. 552a(m).

5. A record related to an International Application filed under the Patent Cooperation Treaty in this system of records may be disclosed, as a routine use, to the International Bureau of the World Intellectual Property Organization, pursuant to the Patent CooperationTreaty.

6. A record in this system of records may be disclosed, as a routine use, to another federal agency for purposes of National Security review (35 U.S.C. 181) and for review pursuant to the Atomic Energy Act (42 U.S.C. 218(c)).

7. A record from this system of records may be disclosed, as a routine use, to the Administrator, General Services, or his/her designee, during an inspection of records conducted by GSA as part of that agency's responsibility to recommend improvements in records management practices and programs, under authority of 44 U.S.C. 2904 and 2906. Such disclosure shall be made in accordance with the GSA regulations governing inspection of records for this purpose, and any other relevant (i.e., GSA or Commerce) directive. Such disclosure shall not be used to make determinations about individuals.

8. A record from this system of records may be disclosed, as a routine use, to the public after either publication of the application pursuant to 35 U.S.C. 122(b) or issuance of a patent pursuant to 35 U.S.C. 151. Further, a record may be disclosed, subject to the limitations of 37 CFR 1.14, as a routine use, to the public if the record was filed in an application which became abandoned or in which the proceedings were terminated and which application is referenced by either a published application, an application open to public inspections or an issued patent.

9. A record from this system of records may be disclosed, as a routine use, to a Federal, State, or local law enforcement agency, if the USPTO becomes aware of a violation or potential violation of law or regulation.

Abstract

A modular fiber optic cassette system, method and cassette is disclosed. The system comprises a case defining a tray receiving space and an opening to a tray receiving space, at least one tray slideably received within the case for movement between a stored position wherein the tray is inside the case and an accessible position wherein a front end of the tray is in front of the opening and outside of the case, a plurality of fiber optic cassettes arrangeable side by side along the tray front end, a first of the cassettes comprising a first cassette width of one of one, two, three, four or six standard width units and a second of the cassettes comprising a second cassette width different from the first cassette width and one of one, two, three, four or six standard width units, and a fastener assembly for removeably securing each of the cassettes to the tray.

CommScope Ex. 1007

Claims

1. A modular fiber optic cassette system, the system comprising:

a case comprising a top and a bottom wall and two opposed side walls, each of said sidewalls attached between respective side edges of said top and bottom wall, said walls together defining a tray receiving space there between and a forward edge of each said wall together defining an opening to said tray receiving space;

at least one tray slideably received within said tray receiving space for movement between a stored position wherein said tray is completely inside said tray receiving space and an accessible position wherein a front end of said tray is in front of said opening and outside of said tray receiving space;

a set of fiber optic cassettes, a selected plurality of the cassettes arrangeable side by side along said tray front end wherein each of said cassettes comprises a plurality of optic plug receiving receptacles arranged side by side in a row along a front thereof, a first of said set of cassettes comprising a first cassette width of one of one, two, three, four and six standard width units and a second of said cassettes comprising a second cassette width different from said first cassette width and one of one, two, three, four and six standard width units; and

a fastener for removeably securing each of said cassettes to said tray.

2. The modular fiber optic cassette system of Claim 1, wherein said tray has a width dimensioned to receive at least twelve standard width units side by side.

3. The modular fiber optic cassette system of Claim 1, wherein each of said cassettes comprises a multi fiber connector receiving receptacle arranged on a rear thereof and a plurality of optic fibers, one of said optic fibers interconnecting

a respective one of said optic plug receiving receptacles with said multi fiber connector receiving receptacle.

4. The modular fiber optic cassette system of Claim 1, wherein each of said cassettes comprises four fiber optic plug receiving receptacles arranged side by side in a row along a front thereof for each standard width unit.

5. The modular fiber optic cassette system of Claim 1, wherein said system is for mounting in a rack and further comprising a pair of mounting brackets, one of said brackets attached to each of said sidewalls on either side of an outside of said case, said mounting brackets for securing said case to the rack.

6. The modular fiber optic cassette system of Claim 1, wherein said tray comprises a plurality from a ferrous metal and said fastener comprises a magnet.

7. The modular fiber optic cassette system of Claim 1, wherein said tray is manufactured from a ferrous metal and said fastener comprises a magnet.

8. The modular fiber optic cassette system of Claim 1, further comprising at least one elongate cable management bracket comprising a cable management loop and a fastener for removeably securing said at least one bracket to said tray, said bracket having a bracket width of one of said standard width units and further wherein when installed on said tray adjacent an installed one of said cassettes, said cable management loop is positioned in front of and to a side of said plurality of optic plug receiving receptacles of said installed cassette.

9. A method for organising a tray comprising a front edge in a fiber optic interconnect system, the method comprising:

defining a standard width unit wherein a width of the front edge is substantially evenly divisible by said standard width unit;

selecting a plurality of cassettes for installation on the tray from a set of cassettes having a plurality of different widths, wherein each of said different widths is evenly divisible by said standard width unit; and

releasably securing said selected cassettes along the front edge of the tray.

10. The method for organising a tray of Claim 9, wherein said set of cassettes comprises cassettes comprising widths of one, two, three, four and six standard width units.

11. The method for organising a tray of Claim 9, wherein said selected cassettes all comprise the same width.

12. The method for organising a tray of Claim 9, wherein said selected cassettes comprise a first cassette having a first width and a second cassette having a second width different from said first width.

13. The method for organising a tray of Claim 9, wherein the width of the front edge is substantially evenly divisible by a maximum of twelve (12) of said standard width units.

14. The method for organising a tray of Claim 12, wherein said selected cassettes further comprise a third cassette comprising a third width different from said first width and said second width.

15. A modular fiber optic cassette for releasably securing to a tray fabricated from a ferrous metal, comprising:

an elongate rectangular optic fiber receiving housing;

a plurality of optic plug receiving receptacles arranged in a row along a front of said housing;

a multi fiber connector receiving receptacle on a rear thereof;

a plurality of optic fibers interconnecting a respective one of said optic plug receiving receptacles with said multi fiber connector receiving receptacle; and

a magnet secured to an underside of said housing.

16. The modular fiber optic cassette of Claim 14, wherein the tray has a tray width substantially evenly divisible by a plurality of standard width units, wherein a plurality of the modular cassettes are arrangeable side by side along a front end of the tray and further wherein said cassette comprise a cassette width of one of one, two, three, four and six standard width units.

TITLE OF THE INVENTION

MODULAR FIBER OPTIC CASSETTE, SYSTEM AND METHOD

CROSS REFERENCE TO RELATED APPLICATIONS

[0001] This Application claims priority under 35 USC §119(e) of US provisional application serial No. 62/567,339 filed on October 3, 2017 which is incorporated herein in its entirely by reference.

FIELD OF THE INVENTION

[0001] The present invention relates to a modular fiber optic cassette, system and method. In particular, the present invention relates to a fiber optic cassette comprising a width of one or more standard width units and such that fiber optic cassettes of different widths can be arranged on the same tray while optimizing the use of tray space.

BACKGROUND OF THE INVENTION

[0002] The prior art discloses fiber optic cassettes or splice boxes for use in terminating fiber optic trunk cables and splitting them out to patch cables which are removeably arranged on tray systems within a rack mounted case. One drawback of these cassettes and tray systems is that they are typically preconfigured to terminate fiber optic cables comprising a single predetermined number of optic fibers. Another drawback is that cassettes which are used to terminate fiber optic cables comprising different numbers of optic fibers are generally incompatible with one another and additionally require trays with different spacing, securing mechanisms and the like.

SUMMARY OF THE INVENTION

[0003] In order to address the above and other drawbacks there is provided a modular fiber optic cassette system. The system comprises a case comprising a top and a bottom wall and two opposed side walls, each of the sidewalls attached between respective side edges of the top and bottom wall, the walls together defining a tray receiving space there between and a forward edge of each the wall together defining an opening to the tray receiving space, at least one tray slideably received within the tray receiving space for movement between a stored position wherein the tray is completely inside the tray receiving space and an accessible position wherein a front end of the tray is in front of the opening and outside of the tray receiving space, a set of fiber optic cassettes, a selected plurality of the cassettes arrangeable side by side along the tray front end wherein each of the cassettes comprises a plurality of optic plug receiving receptacles arranged side by side in a row along a front thereof, a first of the set of cassettes comprising a first cassette width of one of one, two, three, four and six standard width units and a second of the cassettes comprising a second cassette width different from the first cassette width and one of one, two, three, four and six standard width units, and a fastener for removeably securing each of the cassettes to the tray.

[0004] Additionally, there is provided a method for organising a tray comprising a front edge in a fiber optic interconnect system. The method comprises defining a standard width unit wherein a width of the front edge is substantially evenly divisible by the standard width unit, selecting a plurality of cassettes for installation on the tray from a set of cassettes having a plurality of different widths, wherein each of the different widths is evenly divisible by the standard width unit, and releasably securing the selected cassettes along the front edge of the tray.

[0005] There is also provided a modular fiber optic cassette for releasably securing to a tray fabricated from a ferrous metal. The cassette comprises an elongate

rectangular optic fiber receiving housing, a plurality of optic plug receiving receptacles arranged in a row along a front of the housing, a multi fiber connector receiving receptacle on a rear thereof, a plurality of optic fibers interconnecting a respective one of the optic plug receiving receptacles with the multi fiber connector receiving receptacle, and a magnet secured to an underside of the housing.

BRIEF DESCRIPTION OF THE DRAWINGS

[0006] Figure 1 provides a right front perspective view of a modular fiber optic cassette and system mounted in a rack and in accordance with an illustrative embodiment of the present invention;

[0007] Figures 2A and 2B provide respectively a raised right front perspective view and a lowered right front perspective view of a modular fiber optic cassette in accordance with an illustrative embodiment of the present invention;

[0008] Figure 3 provides a front plan view of a modular fiber optic cassette system mounted in a rack in accordance with an illustrative embodiment of the present invention;

[0009] Figures 4A through 4D provide raised right front perspective views of a tray populated with respectively six (6), four (4), three (3) and two (2) cassettes of different widths;

[0010] Figure 5A, 5B and 5C provide front plan views of a modular fiber optic cassette and system mounted in a rack respectively in accordance with first, second and third alternative embodiments of the present invention;

[0011] Figures 6A and 6B provide respectively a raised right front perspective view and a lowered right front perspective view of a modular fiber optic cassette in

accordance with an alternative illustrative embodiment of the present invention; and

[0012] Figures 7A and 7B provide respectively a raised right front perspective view of a tray comprising a plurality modular fiber optic cassettes and a pair of cable management brackets and lowered right front perspective view of a cable management bracket in accordance with a second alternative illustrative embodiment of the present invention.

DETAILED DESCRIPTION OF THE ILLUSTRATIVE EMBODIMENTS

[0013] Referring now to Figure 1, a modular cassette system, generally referred to using the reference numeral 10, will now be described. The modular cassette comprises a slideable tray 12 illustratively mounted within a case 14. The case 14 comprises a top wall 16, a bottom wall 18 and a pair of opposed side walls 20 defining a tray receiving space 22 therebetween. The case 14 is illustratively mounted to the rails 24 of a rack via a pair of mounting brackets 26 wherein one of the brackets 26 is attached to an outer surface 28 of a respective one of the sidewalls 20. The front edges 30 of the walls 16, 18, 20 define an opening via which the tray receiving space 22 can be accessed. In a particular illustrated embodiment the system 10 is shown for mounting in a 19" rack, however in a particular embodiment the system 10, with suitable modifications, may be mounted equally in a cross connect system, fiber bay or wall mount or the like.

[0014] Referring to Figures 2A and 2B in addition to Figure 1, the tray 12 receives a plurality of removable fiber optic module or cassettes 32 arranged side by side on an upper surface 34 thereof. In a first embodiment each fiber optic cassette 32 is secured to the tray 12 using a fastener comprising tabs 36 of inverted "T" cross section which engage with respective slots 38 machined or otherwise formed in the tray 12. A flexible tab 40 is also provided which comprises a boss 42 that engages a respective aperture 44 machined or otherwise formed in the tray 12 when the tabs

36 are engaged within their respective slots 38, thereby releasably securing the cassette 32 to the tray 12. In order to better orient the cassette 36 on the tray during installation, the tray 12 comprises a raised shoulder 46 which is received within a channel 48 moulded or otherwise formed in an underside 50 of the cassette 32.

[0015] Still referring to Figures 2A and 2B, each cassette 32 illustratively comprises a plurality of receptacle modules 52 each comprising a plurality of receptacles 54, illustratively LC Quad type receptacles, arranged in a row and exposed along a forward edge 56 of the cassette 32. The cassette 32 also illustratively terminates a fiber optic cable 58, such as a trunk cable or the like, comprising a plurality of optic fibers at a multi-fiber connector receiving receptacle 60 on a rearward edge. Each optic fiber of the fiber optic cable 58 is interconnected with a respective one of the receptacles 54 using an optic fiber segment 62 comprising a receptacle end which is terminated by a plug 64. The segments 62, which are typically longer than the distance between the forward edge and the rearward edge, are typically looped several times within the cassette 32, for example in a serpentine or the like. A person of ordinary skill in the art will understand that an optic fiber terminated with a plug (not shown) inserted into a selected one of the receptacles 54 will interconnect the optic fiber with a selected optic fiber segment 62.

[0016] Referring now to Figure 3 and Figures 4A through 4D, as discussed above, each cassette 32 illustratively comprises a plurality of receptacle modules 52 each comprising four (4) receptacles 54. It is foreseen to provide a set of four (4) different cassette sizes to accommodate terminating fiber optic cables comprising different number of optic fibers. Each of the different cassette sizes of the set is based on an integer multiple of a standardised pitch or width unit W wherein one standardized width unit accommodates a single receptacle module 52 comprising four (4) receptacles 54. Illustratively, a 2W cassette 32 comprising two (2) modules 52 accommodating eight (8) optic fibers (Figure 4A) is provided, a 3W cassette 32 comprising three (3) modules 52 accommodating twelve (12) optic fibers (Figure 4B)

is provided, a 4W cassette 32 comprising four (4) modules 52 accommodating sixteen (16) optic fibers (Figure 4C) is provided and a 6W cassette 32 comprising six (6) modules 52 accommodating twenty-four (24) optic fibers (Figure 4D) is provided for. The 2W, 3W, 4W and 6W cassettes 32 are typically used only with like cassettes 32 as illustrated and such that respectively six (6), four (4), three (3) and two (2) cassettes fit snuggly side by side on the 12W tray, although in a particular embodiment cassettes 32 of different widths could be used together.

[0017] Although the present illustrative embodiment In a particular embodiment the pitch/width W is based on a LC Quad (SC Duplex) technology footprint comprising four (4) connectors, in an alternative embodiment the pitch/width W could be based on a different technology footprint, including SC Duplex comprising two (2) connectors and MPO type connectors comprising *inter alia* multiple optic fibers such as MPO-12, MPO-16 and MPO-24.

[0018] Still referring to Figures 3, 4A through 4D in addition to Figure 1, a person of ordinary skill in the art will now understand that the disclosed system of cassettes 32 can be used to accommodate optic fiber cables 58 comprising different numbers of optic fibers 62 while ensuring that the same number of optic fibers 62 are accessible via the exposed receptacles 54.

[0019] Referring back to Figure 1, the spacing between adjacent slots 38 as well as the spacing between adjacent apertures 44 conforms to the standardised width unit W and such that the 2W, 3W, 4W and 6W cassettes 32 can be readily accommodated on the tray.

[0020] Referring now to Figure 5A, in a first alternative embodiment of the system each receptacle modules 52 comprises a duplex type module arranged vertically. Additionally in a first cassette size four (4) of such duplex modules 52 are provided to provide for eight (8) receptacles 54 for terminating a fiber optic cable (not shown)

comprised of eight (8) optic fibers. Similar to the first embodiment discussed above, sizes for twelve (12), sixteen (16) and twenty four (24) receptacles are also provided. Again, as the width of the cassettes is an integer multiple of the same pitch/width, cassettes of different widths can be used in the same tray system or in some cases on the same tray without modification or changing the density of the receptacles 54 for terminating optic fibres.

[0021] Referring now to Figure 5B, in a second alternative embodiment of the system each receptacle modules 52 comprises a Quad type module arranged vertically. In a first cassette size two (2) of such quad modules 52 are provided to provide for eight (8) receptacles 54 for terminating a fiber optic cable (not shown) comprised of eight (8) optic fibers. Cassettes comprising three (3), four (4) and six (6) quad type modules 52 are provided to provide respectively twelve (12), sixteen (16) and twenty-four (24) receptacles. Again, as the width of the cassettes is an integer multiple of the same pitch/width, cassettes of different widths can be used in the same tray system or in some cases on the same tray without modification or changing the density of the receptacles 54 for terminating optic fibres.

[0022] Referring now to Figure 5C, in a third alternative embodiment of the system each receptacle modules 52 comprises a duplex type module arranged horizontally in two rows. In a first cassette size four (4) of such duplex modules 52 are provided to provide for eight (8) receptacles 54 for terminating a fiber optic cable (not shown) comprised of eight (8) optic fibers. Cassettes comprising six (6), eight (8) and twelve (12) duplex type modules 52 are provided to provide respectively twelve (12), sixteen (16) and twenty-four (24) receptacles. Again, as the width of the cassettes is an integer multiple of the same pitch/width, cassettes of different widths can be used in the same tray system or in some cases on the same tray without modification or changing the density of the receptacles 54 for terminating optic fibres.

[0023] Referring now to Figures 6A and 6B in addition to Figure 1, in an alternative

embodiment of an assembly for securing the cassettes 32 to the tray 12 the tray 12 is manufactured from a ferrous material such as steel or the like and the fastener comprises a magnet 66 which is attracted to the tray and embedded or otherwise secured within a recess 68 formed in the underside 50 of the cassette 32. The tray 12, further comprises a series of spaced slots 70 arranged along the raised shoulder 46 which engage bosses 72 to ensure correct positioning of the cassettes 32 on the tray 12.

[0024] Referring now to Figure 7A in a second alternative illustrative embodiment other equipment, such as a cable management bracket 74 can be provided with the same width W and such that they can be mounted to together with the cassettes 32 to the tray 12. In this regard, and with reference to Figure 7B in addition to Figure 7, the cable management bracket 74 is provided with tabs 76 comprising an inverted "T" cross section which engage with engage a slot 38 on the tray 12. A flexible tab 78 is provided which comprises a boss 80 that engages one of the apertures 44 in the tray 12 when the tab 76 is engaged within its respective slot 38, thereby releasable securing the cable management bracket 74 to the tray 12. In order to better orient the cable management bracket 74 on the tray during installation, the raised shoulder 46 of the tray 12 is received within a channel 82 moulded or otherwise formed in the underside 84 of the cable management bracket 74. Additionally, each cable management bracket 74 includes a cable management loop 86 for receiving a plurality of optic fibres (not shown) which are terminated at respective ones of the receptacles 54. A flexible strip 88 across the mouth of the cable management loop 86 is provided to releasably retain the plurality of optic fibers within the loop 86.

[0025] Although the present invention has been described hereinabove by way of specific embodiments thereof, it can be modified, without departing from the spirit and nature of the subject invention as defined in the appended claims.

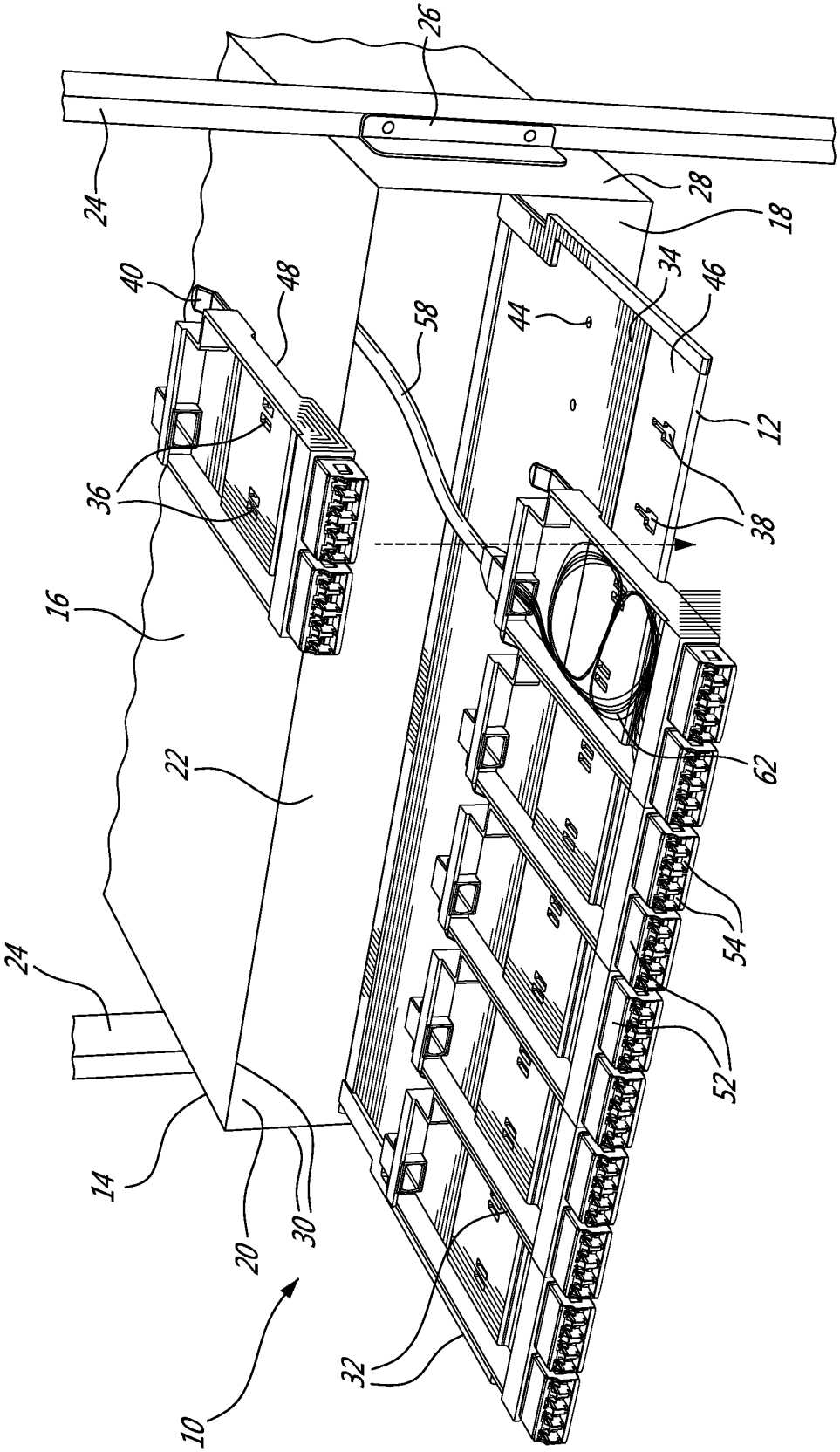

FIG. 1

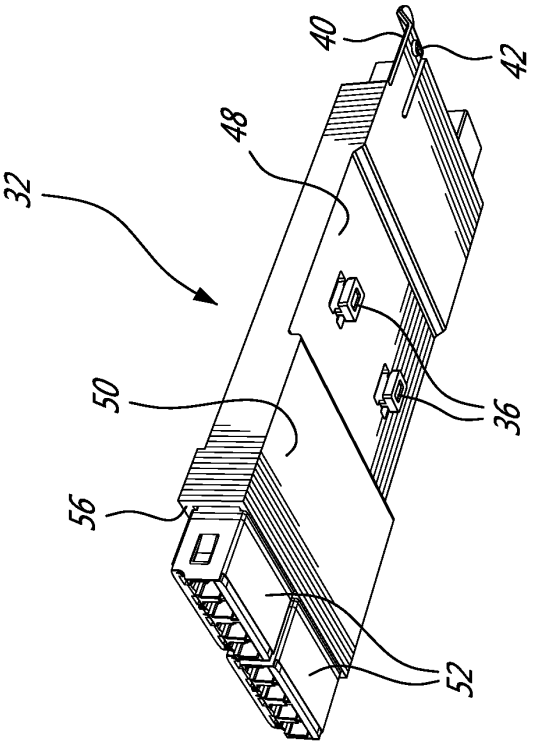

FIG. 2B

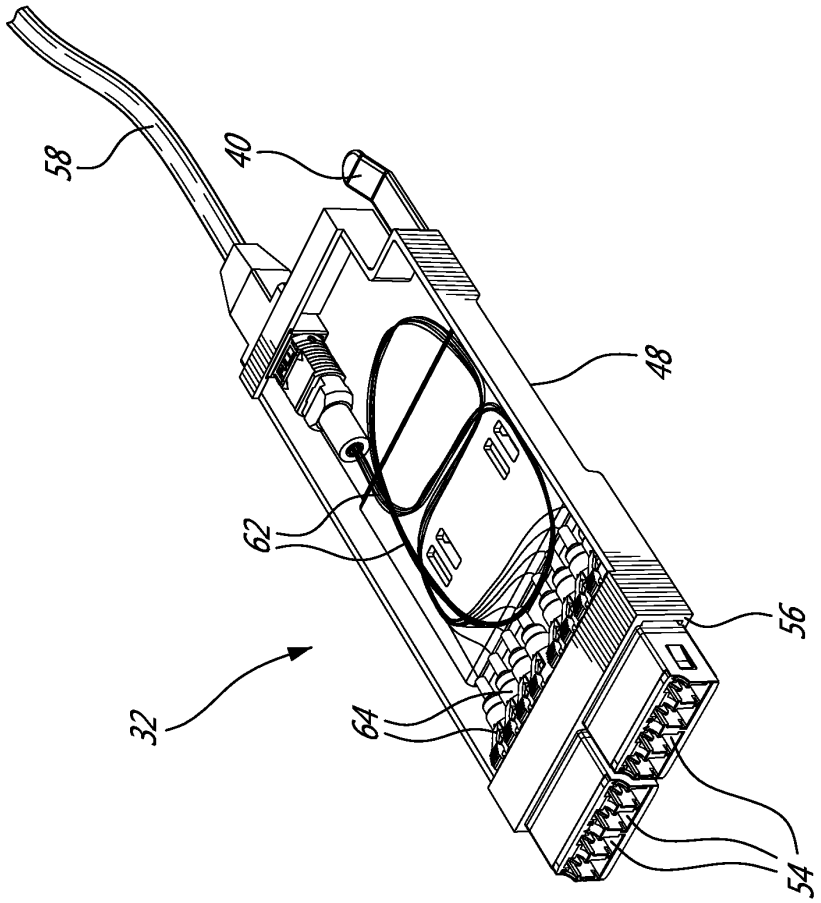

FIG. 2A

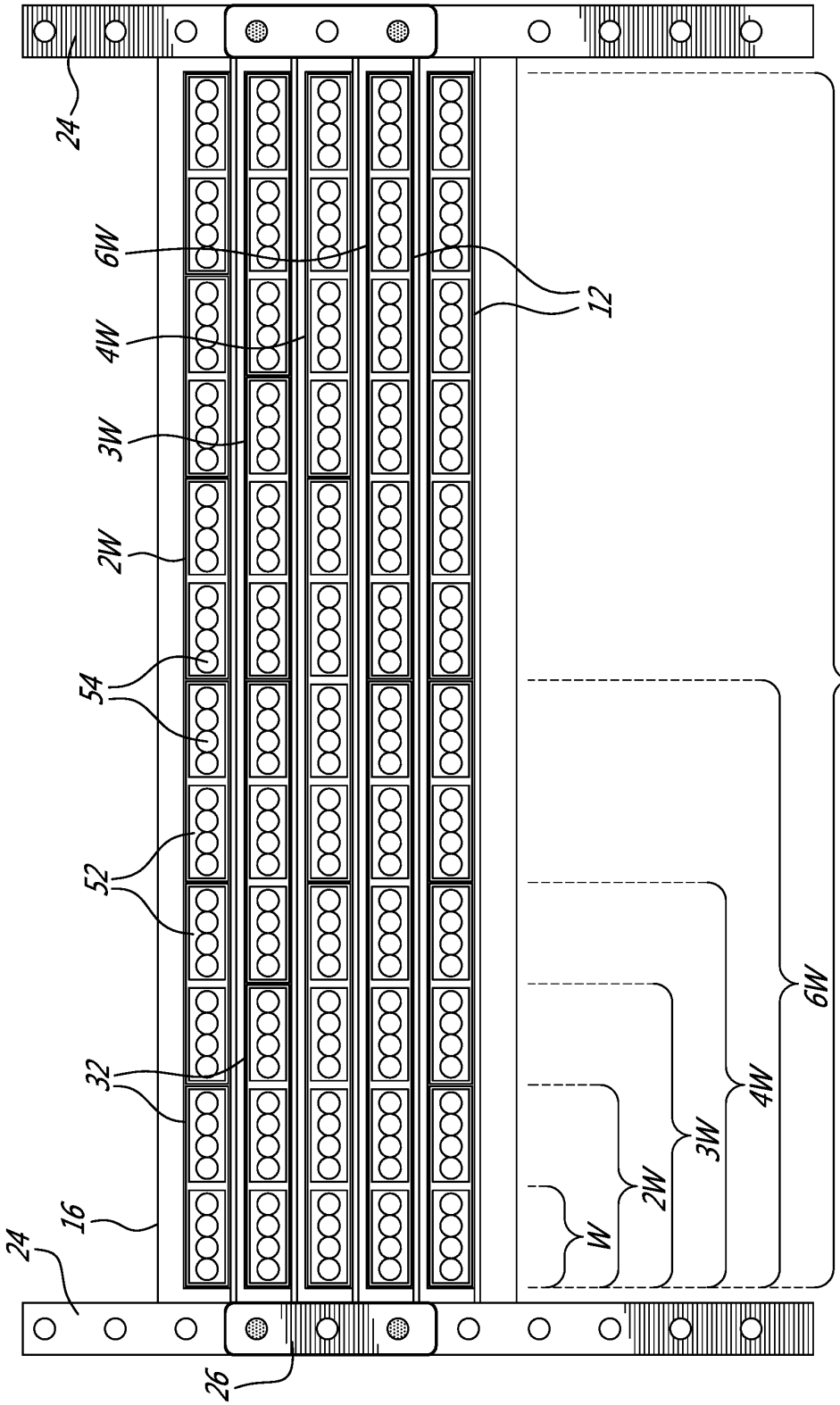

FIG. 3

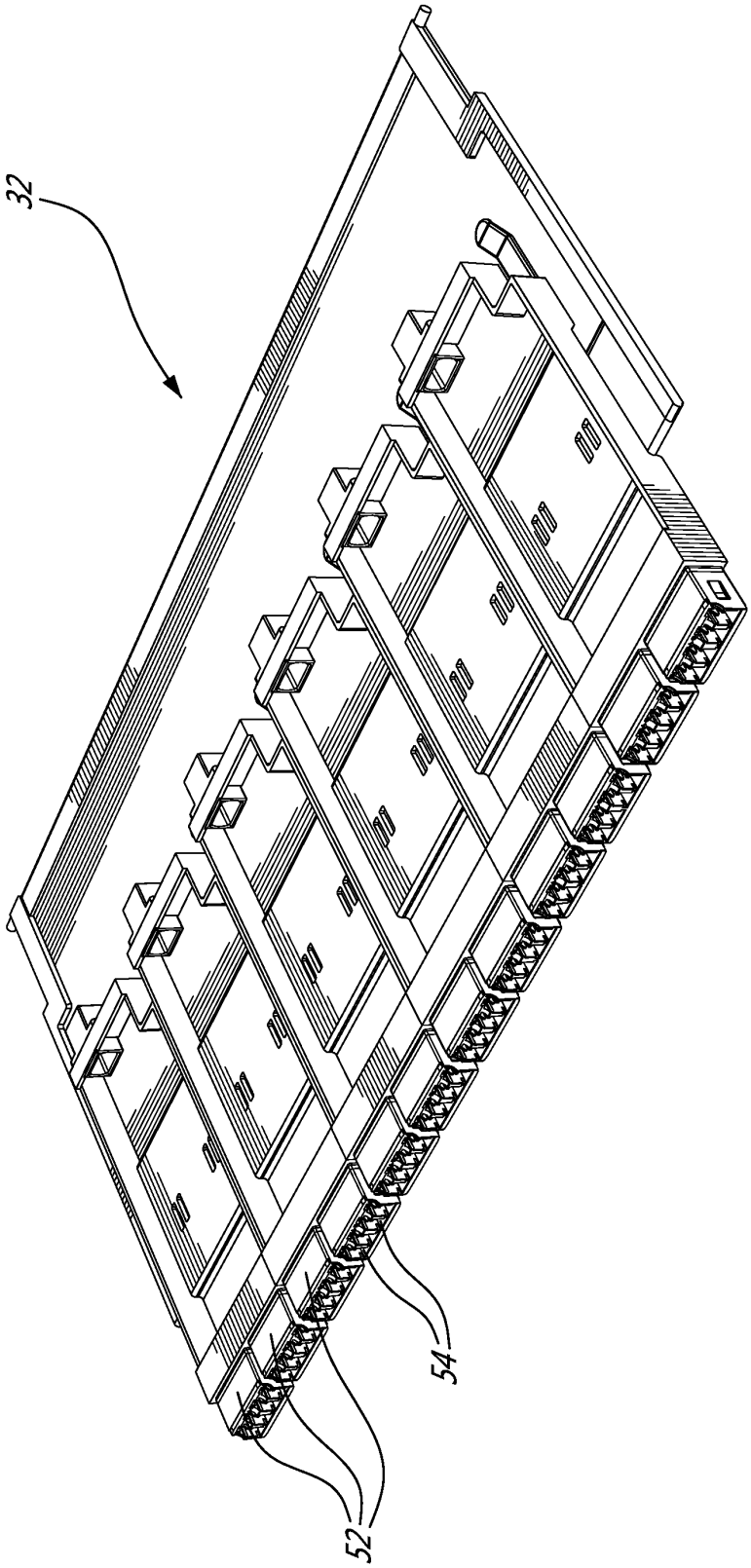

FIG. 4A

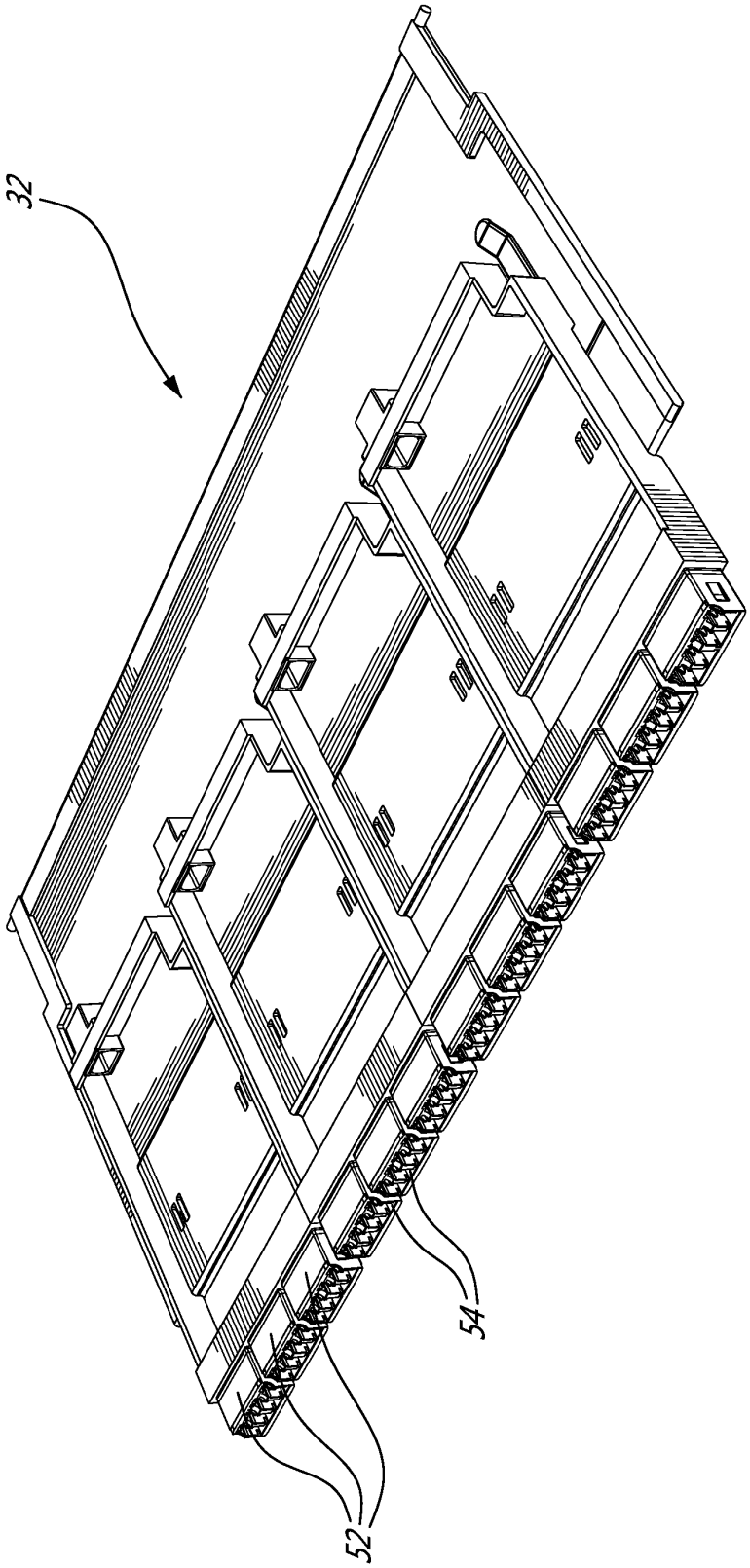

FIG. 4B

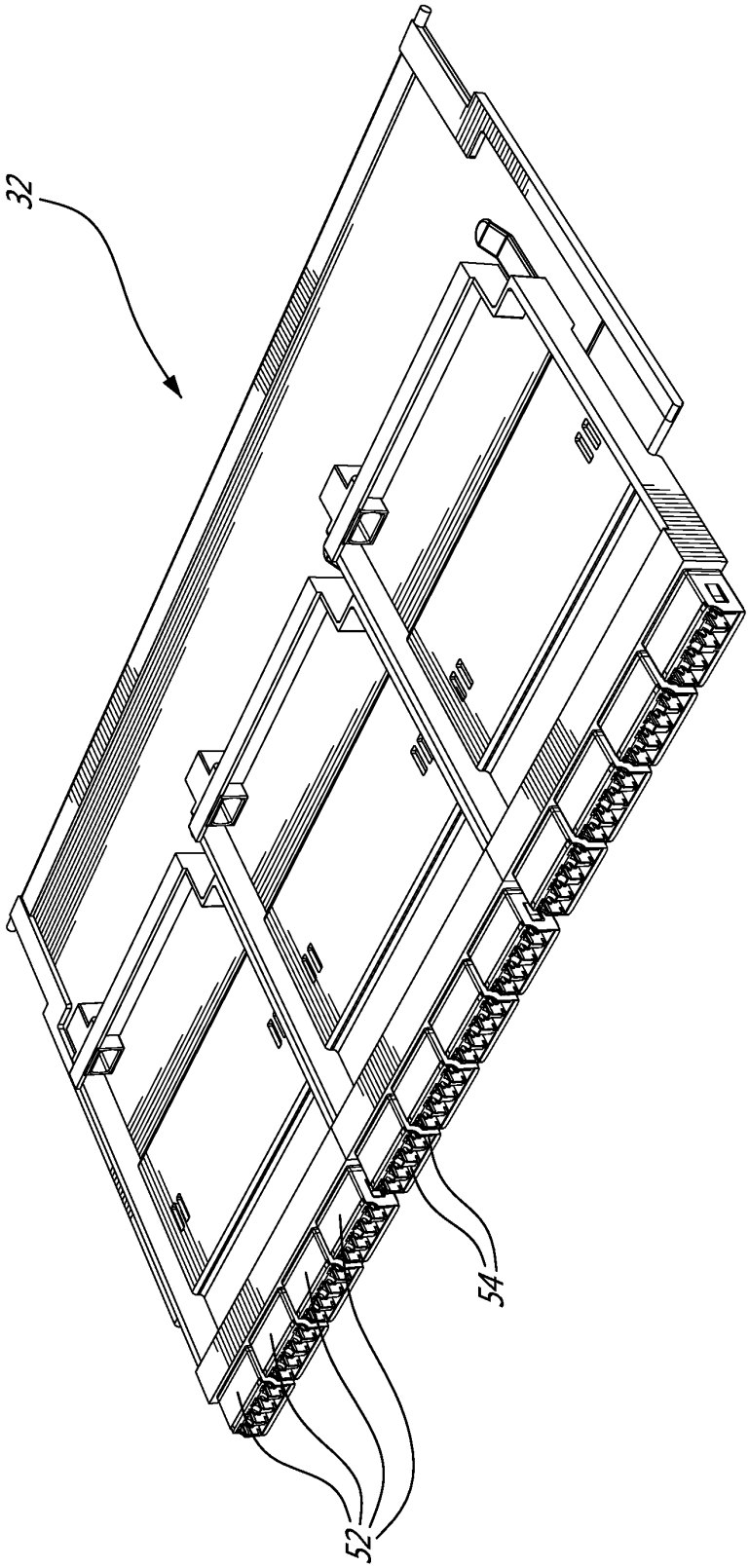

FIG. 4C

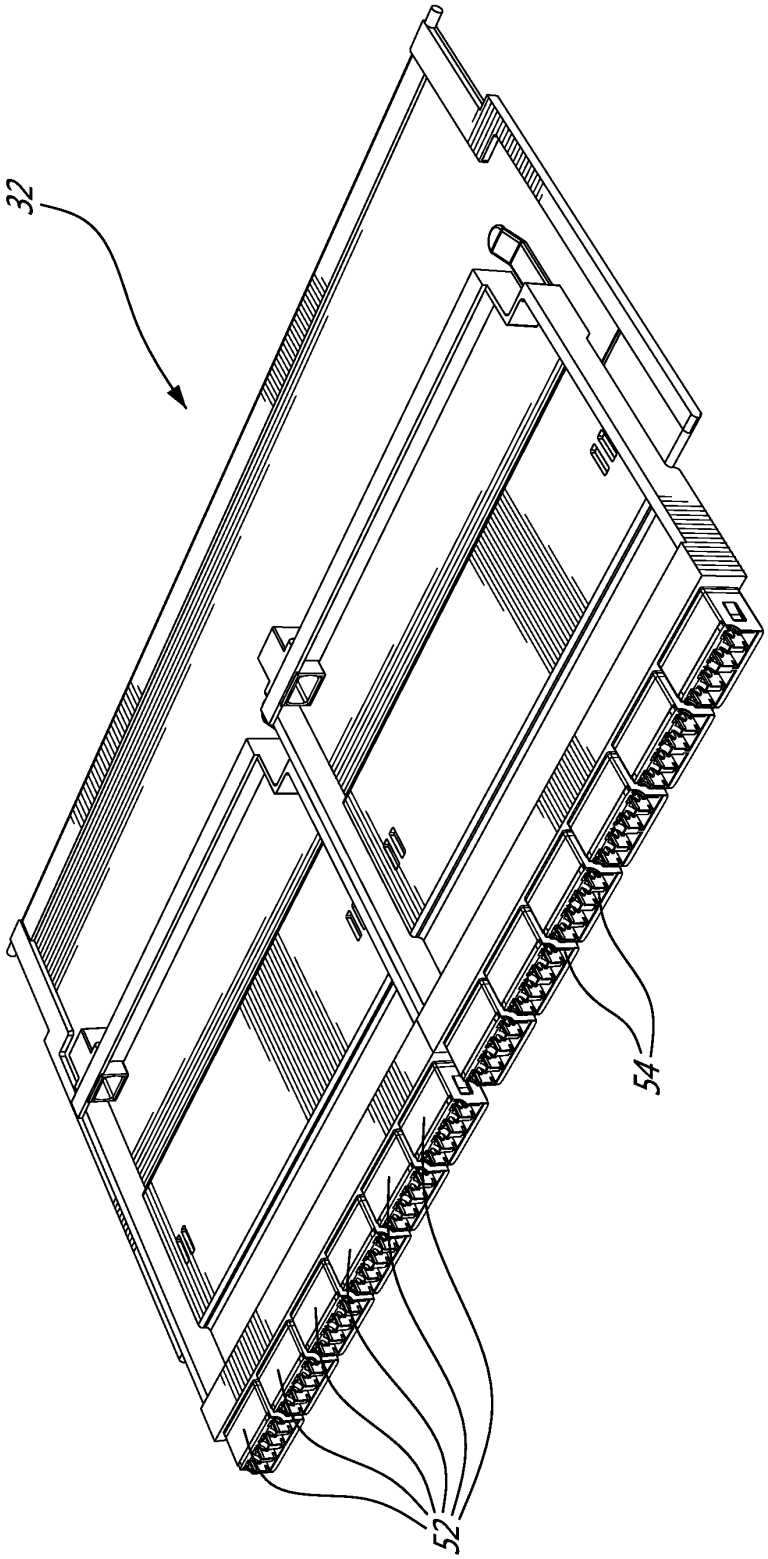

FIG. 4D

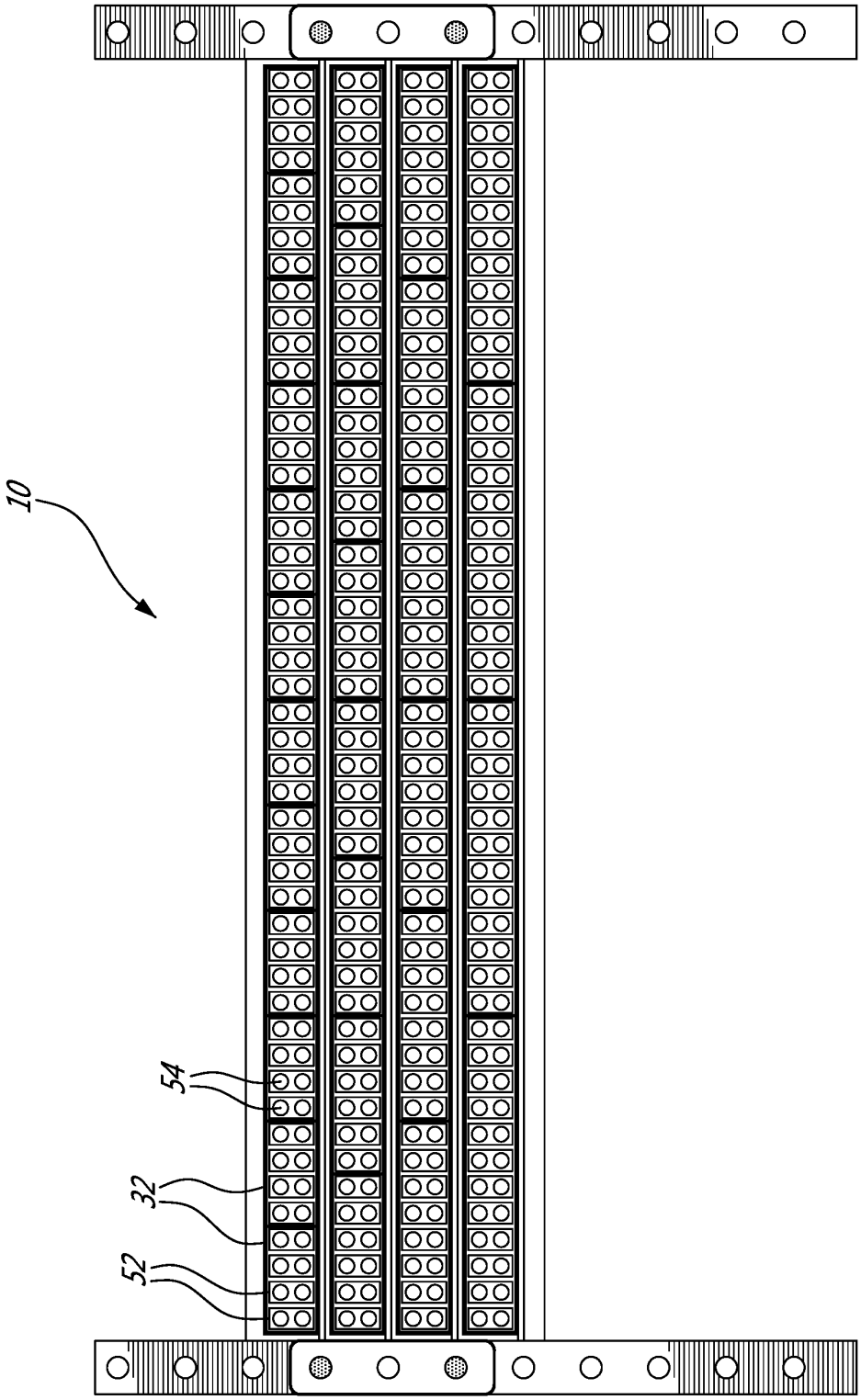

FIG. 5A

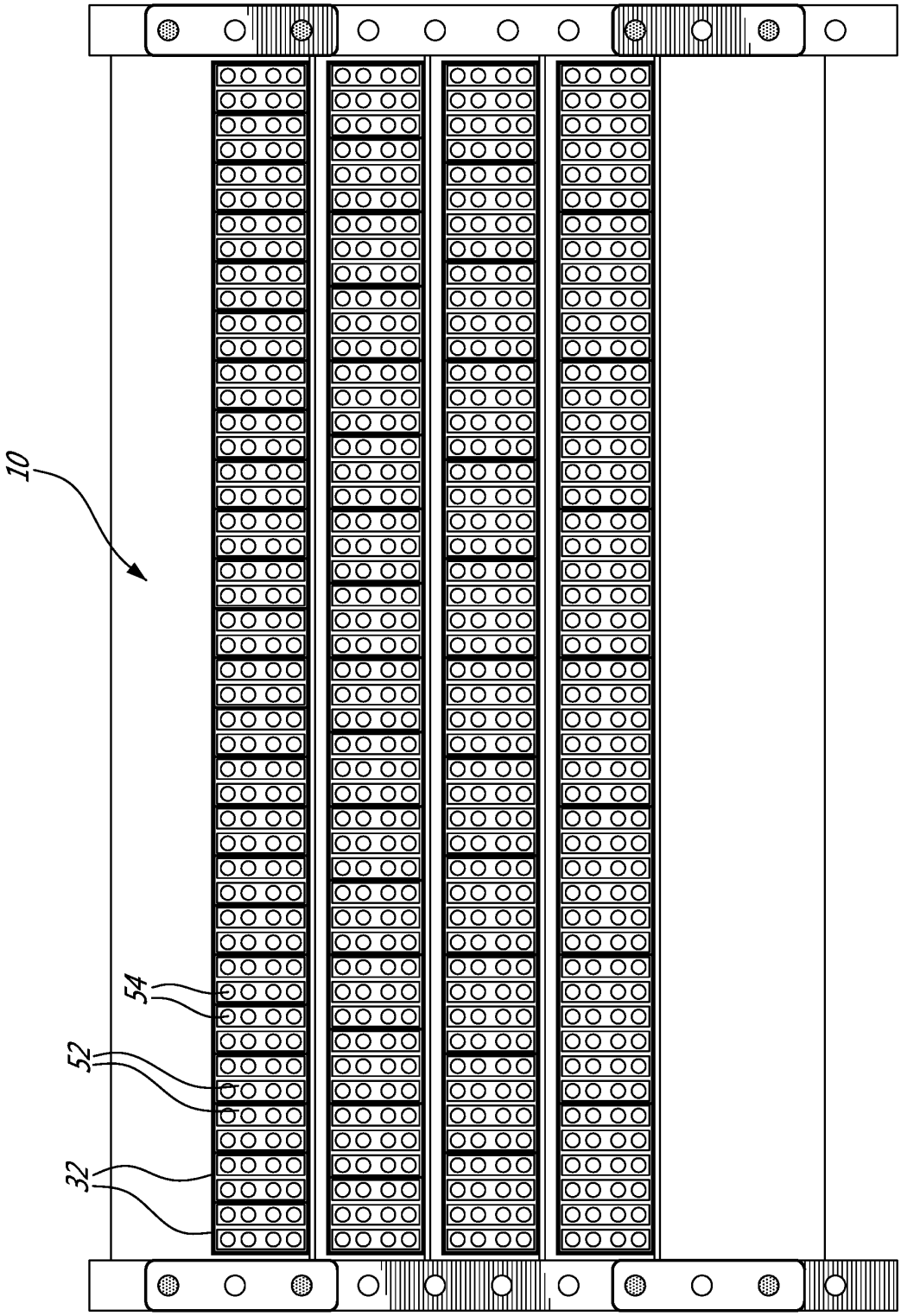

FIG. 5B

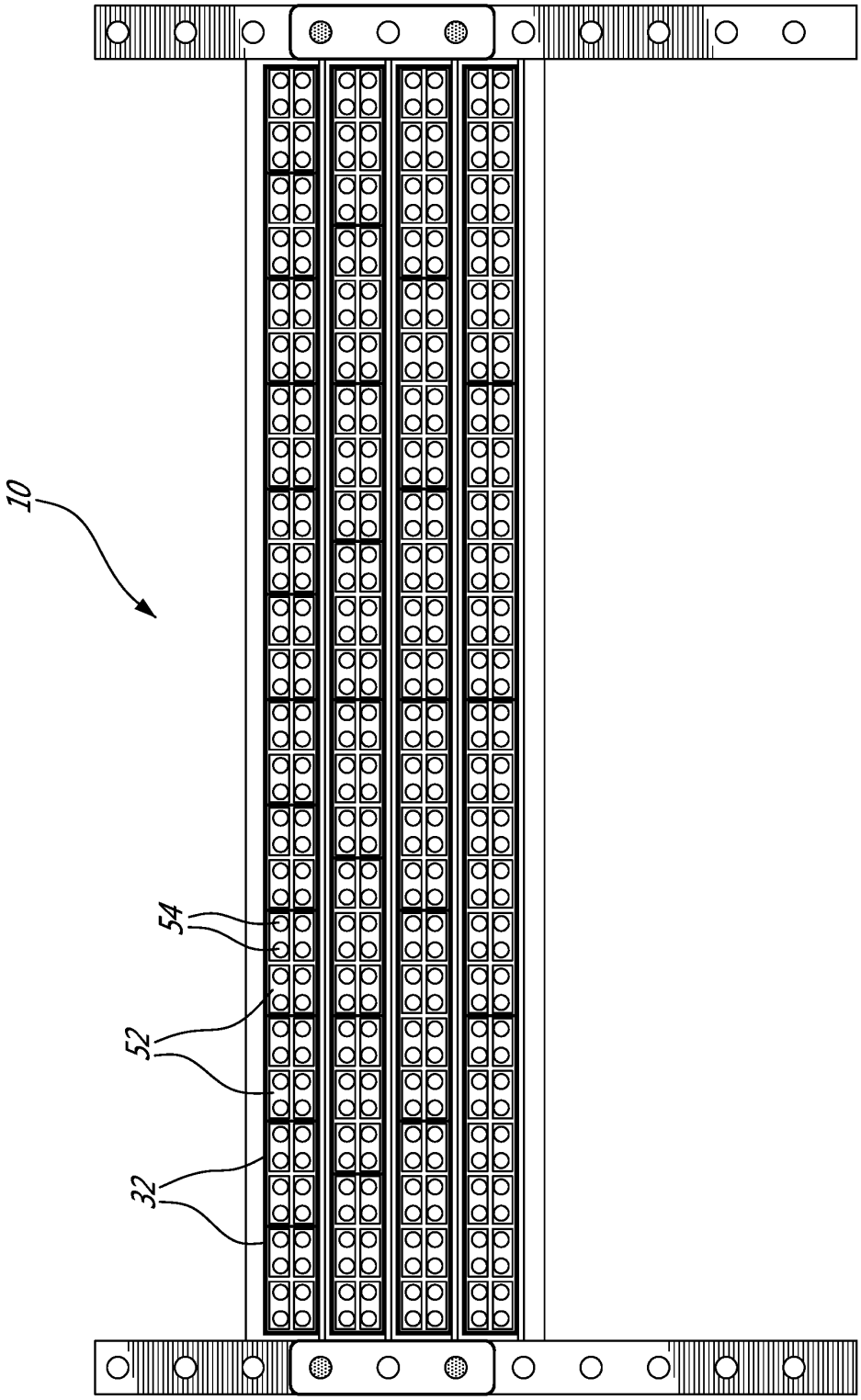

FIG. 5C

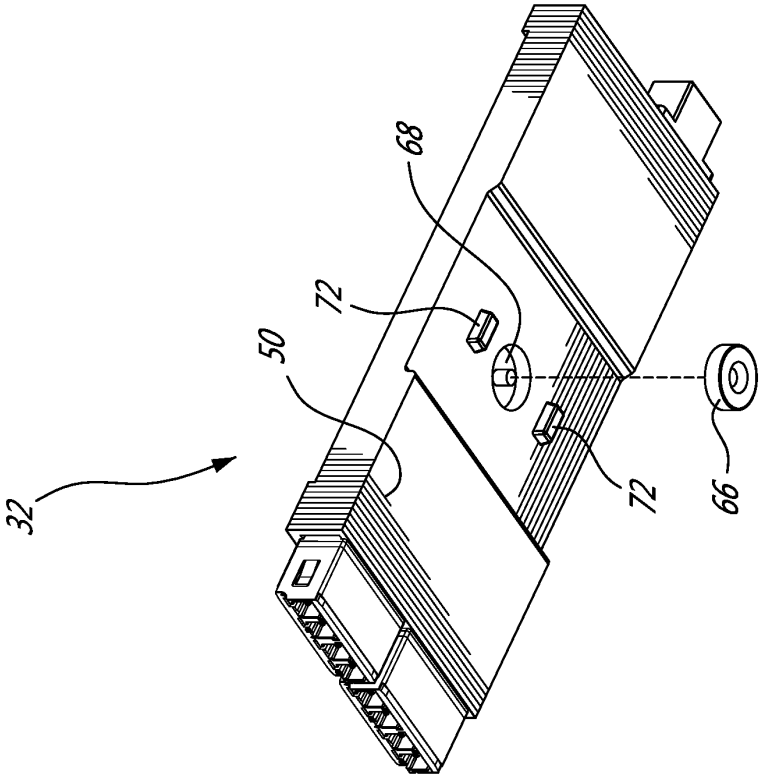

FIG. 6B

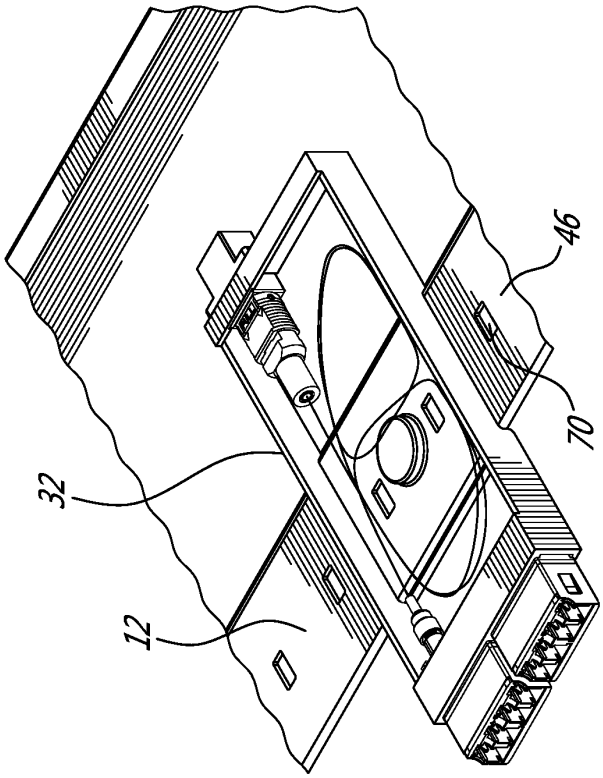

FIG. 6A

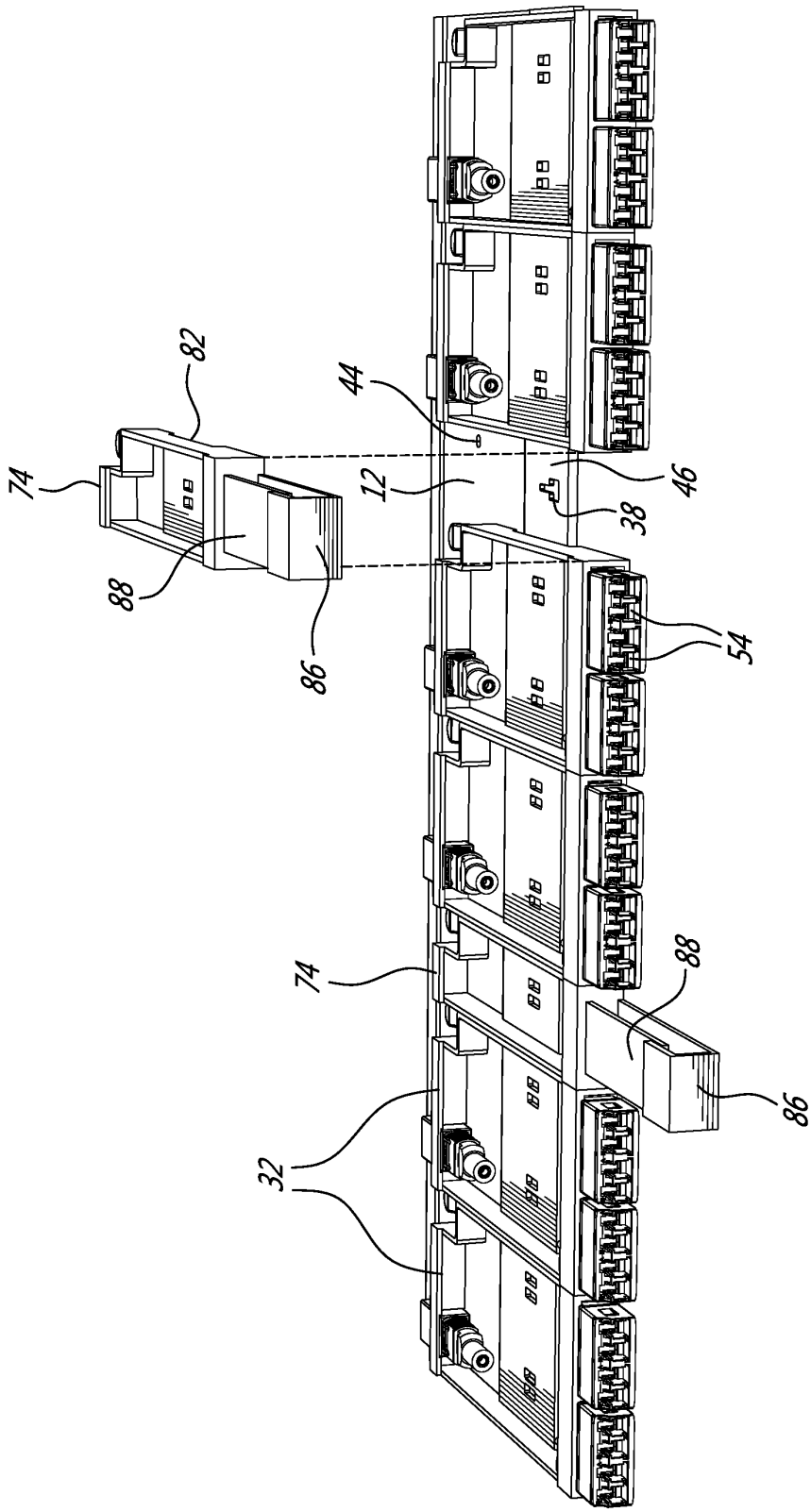

FIG. 7A

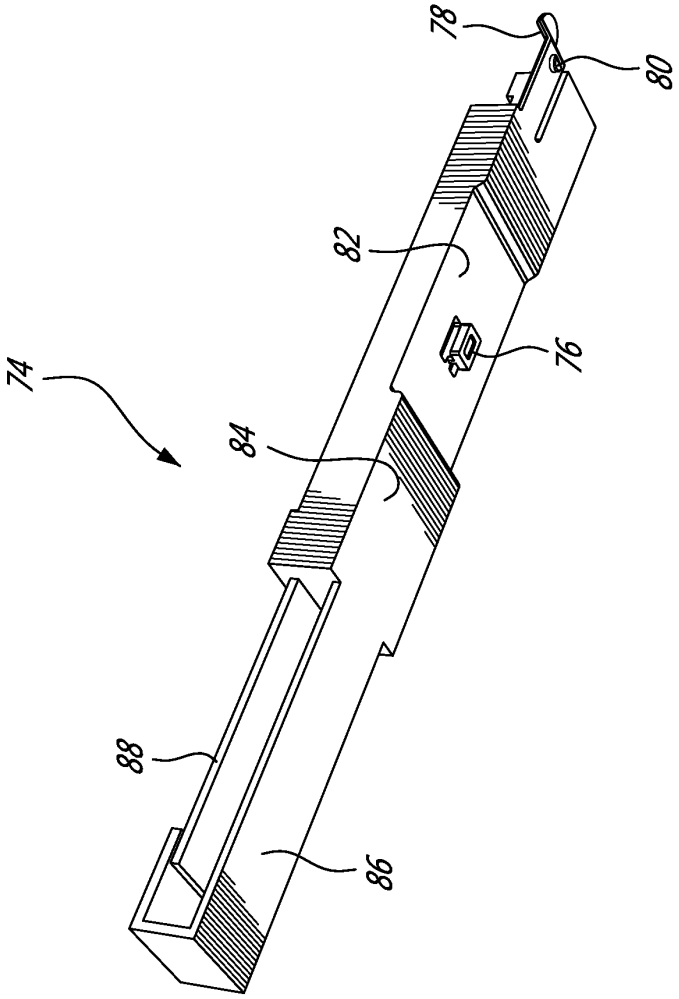

FIG. 7B

Electronic Patent Application Fee Transmittal

Application Number:	
Filing Date:	
Title of Invention:	MODULAR FIBER OPTIC CASSETTE, SYSTEM AND METHOD
First Named Inventor/Applicant Name:	VINCENT PILON
Filer:	Hugh Mansfield/Anna Fovero
Attorney Docket Number:	771/13569.451

Filed as Large Entity

Filing Fees for Utility under 35 USC 111(a)

Description	Fee Code	Quantity	Amount	Sub-Total in USD($)
Basic Filing:				
UTILITY APPLICATION FILING	1011	1	300	300
UTILITY SEARCH FEE	1111	1	660	660
UTILITY EXAMINATION FEE	1311	1	760	760
Pages:				
Claims:				
Miscellaneous-Filing:				
LATE FILING FEE FOR OATH OR DECLARATION	1051	1	160	160
Petition:				

Description	Fee Code	Quantity	Amount	Sub-Total in USD($)
Patent-Appeals-and-Interference:				
Post-Allowance-and-Post-Issuance:				
Extension-of-Time:				
Miscellaneous:				
			Total in USD ($)	**1880**

CommScope Ex. 1007

Electronic Acknowledgement Receipt	
EFS ID:	33846746
Application Number:	16143831
International Application Number:	
Confirmation Number:	4901
Title of Invention:	MODULAR FIBER OPTIC CASSETTE, SYSTEM AND METHOD
First Named Inventor/Applicant Name:	VINCENT PILON
Customer Number:	25545
Filer:	Hugh Mansfield/Anna Fovero
Filer Authorized By:	Hugh Mansfield
Attorney Docket Number:	771/13569.451
Receipt Date:	27-SEP-2018
Filing Date:	
Time Stamp:	13:00:43
Application Type:	Utility under 35 USC 111(a)

Payment information:

Submitted with Payment	yes
Payment Type	CARD
Payment was successfully received in RAM	$1880
RAM confirmation Number	092718INTEFSW13012400
Deposit Account	071742
Authorized User	Anna Fovero
The Director of the USPTO is hereby authorized to charge indicated fees and credit any overpayment as follows: 37 CFR 1.16 (National application filing, search, and examination fees) 37 CFR 1.17 (Patent application and reexamination processing fees)	

37 CFR 1.19 (Document supply fees)

37 CFR 1.20 (Post Issuance fees)

37 CFR 1.21 (Miscellaneous fees and charges)

File Listing:

Document Number	Document Description	File Name	File Size(Bytes)/ Message Digest	Multi Part /.zip	Pages (if appl.)
1	Application Data Sheet	aia0014-5.pdf	1822907 6ea828540b459d0958f9bcc2e08beee9f2b76090	no	8
Warnings:					
Information:					
2		771-USPTO-APPLICATION-Cassette-As_Filed.pdf	62373 c4b32c96b5083619bfae64f5f47dc542277ebf3e	yes	13

	Multipart Description/PDF files in .zip description		
	Document Description	**Start**	**End**
	Abstract	13	13
	Claims	9	12
	Specification	1	8

Warnings:					
Information:					
3	Drawings-only black and white line drawings	771-USPTO-Figures.pdf	1277660 d40684aa031dff1736e1c9e216a2fafa1eb45977	no	13
Warnings:					
Information:					
4	Fee Worksheet (SB06)	fee-info.pdf	36642 807b47366d77e4579206cc9047cd1f47ff11483b	no	2
Warnings:					
Information:					
		Total Files Size (in bytes):	3199582		

This Acknowledgement Receipt evidences receipt on the noted date by the USPTO of the indicated documents, characterized by the applicant, and including page counts, where applicable. It serves as evidence of receipt similar to a Post Card, as described in MPEP 503.

New Applications Under 35 U.S.C. 111
If a new application is being filed and the application includes the necessary components for a filing date (see 37 CFR 1.53(b)-(d) and MPEP 506), a Filing Receipt (37 CFR 1.54) will be issued in due course and the date shown on this Acknowledgement Receipt will establish the filing date of the application.
National Stage of an International Application under 35 U.S.C. 371
If a timely submission to enter the national stage of an international application is compliant with the conditions of 35 U.S.C. 371 and other applicable requirements a Form PCT/DO/EO/903 indicating acceptance of the application as a national stage submission under 35 U.S.C. 371 will be issued in addition to the Filing Receipt, in due course.
New International Application Filed with the USPTO as a Receiving Office
If a new international application is being filed and the international application includes the necessary components for an international filing date (see PCT Article 11 and MPEP 1810), a Notification of the International Application Number and of the International Filing Date (Form PCT/RO/105) will be issued in due course, subject to prescriptions concerning national security, and the date shown on this Acknowledgement Receipt will establish the international filing date of the application.

PTO/AIA/80 (07-12)
Approved for use through 11/30/2014. OMB 0651-0035
U.S. Patent and Trademark Office; U.S DEPARTMENT OF COMMERCE
Under the Paperwork Reduction Act of 1995, no persons are required to respond to a collection of information unless it displays a valid OMB control number.

POWER OF ATTORNEY TO PROSECUTE APPLICATIONS BEFORE THE USPTO

I hereby revoke all previous powers of attorney given in the application identified in the attached statement under 37 CFR 3.73(c).

I hereby appoint:

■ Practitioners associated with Customer Number: 25545

OR

☐ Practitioner(s) named below (if more than ten patent practitioners are to be named, then a customer number must be used):

Name	Registration Number	Name	Registration Number

As attorney(s) or agent(s) to represent the undersigned before the United States Patent and Trademark Office (USPTO) in connection with any and all patent applications assigned only to the undersigned according to the USPTO assignment records or assignments documents attached to this form in accordance with 37 CFR 3.73(c).

Please change the correspondence address for the application identified in the attached statement under 37 CFR 3.73(c) to:

■ The address associated with Customer Number: 25545

OR

☐ Firm or Individual Name			
Address			
City		State	Zip
Country			
Telephone		Email	

Assignee Name and Address. BELDEN CANADA INC.
2310 ALFRED-NOBEL
SAINT-LAURENT, QUEBEC CANADA H4S 2B4

A copy of this form, together with a statement under 37 CFR 3.73(c) (Form PTO/AIA/96 or equivalent) is required to be Filed in each application in which this form is used. The statement under 37 CFR 3.73(c) may be completed by one of The practitioners appointed in this form, and must identify the application in which this Power of Attorney is to be filed.

SIGNATURE of Assignee of Record
The individual whose signature and title is supplied below is authorized to act on behalf of the assignee

Signature	[signature]	Date	12/16/2016
Name	GUYLAINE BLANCHAUD	Telephone	514 822-7059
Title	DIRECTOR		

This collection of information is required by 37 CFR 1.31, 1.32 and 1.33. The information is required to obtain or retain a benefit by the public which is to file (and by the USPTO to process) an application. Confidentiality is governed by 35 U.S.C. 122 and 37 CFR 1.11 and 1.14. This collection is estimated to take 3 minutes to complete, including gathering, preparing, and submitting the completed application form to the USPTO. Time will vary depending upon the individual case. Any comments on the amount of time you require to complete this form and/or suggestions for reducing this burden, should be sent to the Chief Information Officer, U.S. Patent and Trademark Office, U.S. Department of Commerce, P.O. Box 1450, Alexandria, VA 22313-1450. DO NOT SEND FEES OR COMPLETED FORMS TO THIS ADDRESS. **SEND TO: Commissioner for Patents, P.O. Box 1450, Alexandria, VA 22313-1450.**

If you need assistance in completing the form, call 1-800-PTO-9199 and select option 2.

PTO/AIA/96 (08-12)
Approved for use through 01/31/2013. OMB 0651-0031
U.S. Patent and Trademark Office: U.S. DEPARTMENT OF COMMERCE
Under the Paperwork Reduction Act of 1995, no persons are required to respond to a collection of information unless it displays a valid OMB control number.

STATEMENT UNDER 37 CFR 3.73(c)

Applicant/Patent Owner: BELDEN CANADA INC.

Application No./Patent No.: 16/143,831 Filed/Issue Date: SEPTEMBER 27, 2018

Titled: MODULAR FIBER OPTIC CASSETTE, SYSTEM AND METHOD

BELDEN CANADA INC., a CORPORATION

(Name of Assignee) (Type of Assignee, e.g., corporation, partnership, university, government agency, etc.)

states that, for the patent application/patent identified above, it is (choose **one** of options 1, 2, 3 or 4 below):

1. ☑ The assignee of the entire right, title, and interest.

2. ☐ An assignee of less than the entire right, title, and interest (check applicable box):

☐ The extent (by percentage) of its ownership interest is _____%. Additional Statement(s) by the owners holding the balance of the interest must be submitted to account for 100% of the ownership interest.

☐ There are unspecified percentages of ownership. The other parties, including inventors, who together own the entire right, title and interest are:

Additional Statement(s) by the owner(s) holding the balance of the interest must be submitted to account for the entire right, title, and interest.

3. ☐ The assignee of an undivided interest in the entirety (a complete assignment from one of the joint inventors was made). The other parties, including inventors, who together own the entire right, title, and interest are:

Additional Statement(s) by the owner(s) holding the balance of the interest must be submitted to account for the entire right, title, and interest.

4. ☐ The recipient, via a court proceeding or the like (*e.g.*, bankruptcy, probate), of an undivided interest in the entirety (a complete transfer of ownership interest was made). The certified document(s) showing the transfer is attached.

The interest identified in option 1, 2 or 3 above (not option 4) is evidenced by either (choose **one** of options A or B below):

A. ☑ An assignment from the inventor(s) of the patent application/patent identified above. The assignment was recorded in the United States Patent and Trademark Office at Reel _____, Frame _____, or for which a copy thereof is attached.

B. ☐ A chain of title from the inventor(s), of the patent application/patent identified above, to the current assignee as follows:

1. From: _____ To: _____

The document was recorded in the United States Patent and Trademark Office at

Reel _____, Frame _____, or for which a copy thereof is attached.

2. From: _____ To: _____

The document was recorded in the United States Patent and Trademark Office at

Reel _____, Frame _____, or for which a copy thereof is attached.

This collection of information is required by 37 CFR 3.73(b). The information is required to obtain or retain a benefit by the public which is to file (and by the USPTO to process) an application. Confidentiality is governed by 35 U.S.C. 122 and 37 CFR 1.11 and 1.14. This collection is estimated to take 12 minutes to complete, including gathering, preparing, and submitting the completed application form to the USPTO. Time will vary depending upon the individual case. Any comments on the amount of time you require to complete this form and/or suggestions for reducing this burden, should be sent to the Chief Information Officer, U.S. Patent and Trademark Office, U.S. Department of Commerce, P.O. Box 1450, Alexandria, VA 22313-1450. DO NOT SEND FEES OR COMPLETED FORMS TO THIS ADDRESS. **SEND TO: Commissioner for Patents, P.O. Box 1450, Alexandria, VA 22313-1450.**

If you need assistance in completing the form, call 1-800-PTO-9199 and select option 2.

PTO/AIA/96 (08-12)
Approved for use through 01/31/2013. OMB 0651-0031
U.S. Patent and Trademark Office; U.S. DEPARTMENT OF COMMERCE
Under the Paperwork Reduction Act of 1995, no persons are required to respond to a collection of information unless it displays a valid OMB control number.

STATEMENT UNDER 37 CFR 3.73(c)

3. From: _____ To: _____

The document was recorded in the United States Patent and Trademark Office at

Reel _____, Frame _____, or for which a copy thereof is attached.

4. From: _____ To: _____

The document was recorded in the United States Patent and Trademark Office at

Reel _____, Frame _____, or for which a copy thereof is attached.

5. From: _____ To: _____

The document was recorded in the United States Patent and Trademark Office at

Reel _____, Frame _____, or for which a copy thereof is attached.

6. From: _____ To: _____

The document was recorded in the United States Patent and Trademark Office at

Reel _____, Frame _____, or for which a copy thereof is attached.

☐ Additional documents in the chain of title are listed on a supplemental sheet(s).

☑ As required by 37 CFR 3.73(c)(1)(i), the documentary evidence of the chain of title from the original owner to the assignee was, or concurrently is being, submitted for recordation pursuant to 37 CFR 3.11.

[NOTE: A separate copy (i.e., a true copy of the original assignment document(s)) must be submitted to Assignment Division in accordance with 37 CFR Part 3, to record the assignment in the records of the USPTO. See MPEP 302.08]

The undersigned (whose title is supplied below) is authorized to act on behalf of the assignee.

/HUGH MANSFIELD/	OCTOBER 4, 2018
Signature	Date
HUGH MANSFIELD	55757
Printed or Typed Name	Title or Registration Number

[Page 2 of 2]

13569.451

ASSIGNMENT OF INVENTION

UNIVERSAL

WHEREAS, I/We, 1) Vincent PILON whose full address is 1) 850, 40e avenue, Lachine, Québec H8T 2G6, Canada (hereinafter referred to as the Assignors); have invented MODULAR FIBER OPTIC CASSETTE, SYSTEM AND METHOD described in U.S. Patent Application No. 16/143,831 filed on September 27, 2018 which claims priority on U.S. Patent Application No. 62/567,339 filed on October 3, 2017. I/We hereby authorize and request my/our patent agent to insert missing information above and information regarding any additional application covering the same invention when known here in parentheses (Country Canada, Application number 3,019,081, filed September 27, 2018; Country _____, Application number _____, filed _____);

and:

WHEREAS, BELDEN CANADA INC., whose full post office address is 2310 Alfred Nobel, Saint-Laurent, Québec H4S 2B4, Canada (hereinafter referred to as the Assignee), is desirous of acquiring my/our entire right, title and interest in and to said invention or inventions and in and to any and all patents to be obtained therefor;

NOW, THEREFORE, in consideration of One Dollar ($1.00) and other valuable consideration, the receipt of which is hereby acknowledged, I/We have and by these present do hereby sell, assign and transfer unto said Assignee, its successors and assigns, my/our entire right, title and interest in and to said invention or inventions, as described in the aforesaid application, in any form or embodiment thereof, and in and to the aforesaid application; and in and to any applications based thereon filed in any foreign country, including the right to file said foreign applications under the provisions of the Patent Cooperation Treaty and under the Paris Convention; also my/our entire right, title and interest in and to any and all patents, reissues or extensions thereof to be obtained in this or any foreign country upon said invention or inventions, and any divisional, continuation, continuation-in-part, substitute application(s) or supplementary disclosure(s) which may be

filed upon said invention or inventions, in any country; and I/We hereby authorize and request the issuing authority to issue any and all patents on said application or applications to said Assignee.

I/We further agree without any payment by said Assignee other than expenses incurred by the undersigned, to communicate to said Assignee, its representatives or agents, any facts useful as evidence for interference purposes or for other proceedings relating to intellectual property encompassing the invention, whenever requested; testify in any interference, litigation or other proceedings, whenever requested; and execute and deliver, on request, all lawful papers required to make any of the foregoing provisions effective, and likewise make these provisions binding upon my/our heirs, legal representatives, administrators and assigns.

Les soussignés désirent que la présente cession soit en anglais. The undersigned request that the present assignment be in English.

IN WITNESS WHEREOF, I/We have hereunto set my/our hand(s) and seal.

WITNESS	DATE	ASSIGNOR
Signature of Witness	10-01-2018 MM/DD/YYYY	Vincent PILON
LUC MALLETTE Name of Witness		

WITNESS	DATE	ASSIGNEE
Signature of Witness	10/01/2018 MM/DD/YYYY	Signature of authorized representative of **BELDEN CANADA INC.**
FRANCOIS BEAUREGARD Name of Witness		LUC MALETTE, ENG. Name of authorized representative of **BELDEN CANADA INC.**
		Director R&D Networking Connectivity Title of authorized representative of **BELDEN CANADA INC.**

The Assignment is executed *nunc pro tunc* as of October 3, 2017.

PTO/AIA/01 (06-12)
Approved for use through 11/30/2020. OMB 0651-0032
U.S. Patent and Trademark Office, U.S. DEPARTMENT OF COMMERCE
Under the Paperwork Reduction Act of 1995, no persons are required to respond to a collection of information unless it displays a valid OMB control number.

DECLARATION (37 CFR 1.63) FOR UTILITY OR DESIGN APPLICATION USING AN APPLICATION DATA SHEET (37 CFR 1.76)

Title of Invention: MODULAR FIBER OPTIC CASSETTE, SYSTEM AND METHOD

As the below named inventor, I hereby declare that:

This declaration is directed to:

- ☐ The attached application, or
- ☒ United States application or PCT international application number 16/143,831 filed on September 27, 2018.

The above-identified application was made or authorized to be made by me.

I believe that I am the original inventor or an original joint inventor of a claimed invention in the application.

I hereby acknowledge that any willful false statement made in this declaration is punishable under 18 U.S.C. 1001 by fine or imprisonment of not more than five (5) years, or both.

WARNING:

Petitioner/applicant is cautioned to avoid submitting personal information in documents filed in a patent application that may contribute to identity theft. Personal information such as social security numbers, bank account numbers, or credit card numbers (other than a check or credit card authorization form PTO-2038 submitted for payment purposes) is never required by the USPTO to support a petition or an application. If this type of personal information is included in documents submitted to the USPTO, petitioners/applicants should consider redacting such personal information from the documents before submitting them to the USPTO. Petitioner/applicant is advised that the record of a patent application is available to the public after publication of the application (unless a non-publication request in compliance with 37 CFR 1.213(a) is made in the application) or issuance of a patent. Furthermore, the record from an abandoned application may also be available to the public if the application is referenced in a published application or an issued patent (see 37 CFR 1.14). Checks and credit card authorization forms PTO-2038 submitted for payment purposes are not retained in the application file and therefore are not publicly available.

LEGAL NAME OF INVENTOR

Inventor: Vincent PILON Date (Optional): 10/01/2018

Signature: _____

Note: An application data sheet (PTO/SB/14 or equivalent), including naming the entire inventive entity, must accompany this form or must have been previously filed. Use an additional PTO/AIA/01 form for each additional inventor.

This collection of information is required by 35 U.S.C. 115 and 37 CFR 1.63. The information is required to obtain or retain a benefit by the public which is to file (and by the USPTO to process) an application. Confidentiality is governed by 35 U.S.C. 122 and 37 CFR 1.11 and 1.14. This collection is estimated to take 1 minute to complete, including gathering, preparing, and submitting the completed application form to the USPTO. Time will vary depending upon the individual case. Any comments on the amount of time you require to complete this form and/or suggestions for reducing this burden, should be sent to the Chief Information Officer, U.S. Patent and Trademark Office, U.S. Department of Commerce, P.O. Box 1450, Alexandria, VA 22313-1450. DO NOT SEND FEES OR COMPLETED FORMS TO THIS ADDRESS. **SEND TO: Commissioner for Patents, P.O. Box 1450, Alexandria, VA 22313-1450.**

If you need assistance in completing the form, call 1-800-PTO-9199 and select option 2.

SUPPLEMENTAL APPLICATION DATA SHEET

PTO/AIA/14 (11-15)
Approved for use through 04/30/2017. OMB 0651-0032
U.S. Patent and Trademark Office; U.S. DEPARTMENT OF COMMERCE

Under the Paperwork Reduction Act of 1995, no persons are required to respond to a collection of information unless it contains a valid OMB control number.

Application Data Sheet 37 CFR 1.76	Attorney Docket Number	771/13569.451
	Application Number	**16/143,831**
Title of Invention	MODULAR ~~FIBRE~~ FIBER OPTIC CASSETTE, SYSTEM AND METHOD	

The application data sheet is part of the provisional or nonprovisional application for which it is being submitted. The following form contains the bibliographic data arranged in a format specified by the United States Patent and Trademark Office as outlined in 37 CFR 1.76.
This document may be completed electronically and submitted to the Office in electronic format using the Electronic Filing System (EFS) or the document may be printed and included in a paper filed application.

Secrecy Order 37 CFR 5.2:

☐ Portions or all of the application associated with this Application Data Sheet may fall under a Secrecy Order pursuant to 37 CFR 5.2 (Paper filers only. Applications that fall under Secrecy Order may not be filed electronically.)

Inventor Information:

Inventor 1 Remove

Legal Name

Prefix	Given Name	Middle Name	Family Name	Suffix
	VINCENT		PILON	

Residence Information (Select One) ○ US Residency ◉ Non US Residency ○ Active US Military Service

City	LACHINE	Country of Residence i	CA

Mailing Address of Inventor:

Address 1	850 40e AVENUE		
Address 2			
City	LACHINE	**State/Province**	QC
Postal Code	H8T 2G6	**Country** i	CA

All Inventors Must Be Listed - Additional Inventor Information blocks may be generated within this form by selecting the **Add** button. Add

Correspondence Information:

Enter either Customer Number or complete the Correspondence Information section below.
For further information see 37 CFR 1.33(a).

☐ **An Address is being provided for the correspondence Information of this application.**

Customer Number	25545		
Email Address	hmansfield@lavery.ca	Add Email	Remove Email
Email Address	afovero@lavery.ca	Add Email	Remove Email

Application Information:

Title of the Invention	MODULAR ~~FIBRE~~ FIBER OPTIC CASSETTE, SYSTEM AND METHOD		
Attorney Docket Number	771/13569.451	**Small Entity Status Claimed**	☐
Application Type	Nonprovisional		
Subject Matter	Utility		
Total Number of Drawing Sheets (if any)	13	**Suggested Figure for Publication (if any)**	

EFS Web 2.2.12

Under the Paperwork Reduction Act of 1995, no persons are required to respond to a collection of information unless it contains a valid OMB control number.

Application Data Sheet 37 CFR 1.76	Attorney Docket Number	771/13569.451
	Application Number	**16/143,831**
Title of Invention	MODULAR ~~FIBRE~~ FIBER OPTIC CASSETTE, SYSTEM AND METHOD	

Filing By Reference:

Only complete this section when filing an application by reference under 35 U.S.C. 111(c) and 37 CFR 1.57(a). Do not complete this section if application papers including a specification and any drawings are being filed. Any domestic benefit or foreign priority information must be provided in the appropriate section(s) below (i.e., "Domestic Benefit/National Stage Information" and "Foreign Priority Information").

For the purposes of a filing date under 37 CFR 1.53(b), the description and any drawings of the present application are replaced by this reference to the previously filed application, subject to conditions and requirements of 37 CFR 1.57(a).

Application number of the previously filed application	Filing date (YYYY-MM-DD)	Intellectual Property Authority or Country

Publication Information:

☐ Request Early Publication (Fee required at time of Request 37 CFR 1.219)

☐ **Request Not to Publish.** I hereby request that the attached application not be published under 35 U.S.C. 122(b) and certify that the invention disclosed in the attached application **has not and will not** be the subject of an application filed in another country, or under a multilateral international agreement, that requires publication at eighteen months after filing.

Representative Information:

Representative information should be provided for all practitioners having a power of attorney in the application. Providing this information in the Application Data Sheet does not constitute a power of attorney in the application (see 37 CFR 1.32).
Either enter Customer Number or complete the Representative Name section below. If both sections are completed the customer Number will be used for the Representative Information during processing.

Please Select One:	◉ Customer Number	○ US Patent Practitioner	○ Limited Recognition (37 CFR 11.9)
Customer Number	25545		

Domestic Benefit/National Stage Information:

This section allows for the applicant to either claim benefit under 35 U.S.C. 119(e), 120, 121, 365(c), or 386(c) or indicate National Stage entry from a PCT application. Providing benefit claim information in the Application Data Sheet constitutes the specific reference required by 35 U.S.C. 119(e) or 120, and 37 CFR 1.78.
When referring to the current application, please leave the "Application Number" field blank.

Prior Application Status	Pending		Remove
Application Number	Continuity Type	Prior Application Number	Filing or 371(c) Date (YYYY-MM-DD)
	Claims benefit of provisional	62567339	2017-10-03

Additional Domestic Benefit/National Stage Data may be generated within this form by selecting the **Add** button.

Application Data Sheet 37 CFR 1.76		Attorney Docket Number	771/13569.451
		Application Number	**16/143,831**
Title of Invention	MODULAR ~~FIBRE~~ **FIBER** OPTIC CASSETTE, SYSTEM AND METHOD		

Foreign Priority Information:

This section allows for the applicant to claim priority to a foreign application. Providing this information in the application data sheet constitutes the claim for priority as required by 35 U.S.C. 119(b) and 37 CFR 1.55. When priority is claimed to a foreign application that is eligible for retrieval under the priority document exchange program (PDX)[i] the information will be used by the Office to automatically attempt retrieval pursuant to 37 CFR 1.55(i)(1) and (2). Under the PDX program, applicant bears the ultimate responsibility for ensuring that a copy of the foreign application is received by the Office from the participating foreign intellectual property office, or a certified copy of the foreign priority application is filed, within the time period specified in 37 CFR 1.55(g)(1).

Remove

Application Number	Country[i]	Filing Date (YYYY-MM-DD)	Access Code[i] (if applicable)

Additional Foreign Priority Data may be generated within this form by selecting the **Add** button.

Statement under 37 CFR 1.55 or 1.78 for AIA (First Inventor to File) Transition Applications

☐ This application (1) claims priority to or the benefit of an application filed before March 16, 2013 and (2) also contains, or contained at any time, a claim to a claimed invention that has an effective filing date on or after March 16, 2013.
NOTE: By providing this statement under 37 CFR 1.55 or 1.78, this application, with a filing date on or after March 16, 2013, will be examined under the first inventor to file provisions of the AIA.

Application Data Sheet 37 CFR 1.76	Attorney Docket Number	771/13569.451
	Application Number	**16/143,831**
Title of Invention	MODULAR ~~FIBRE~~ FIBER OPTIC CASSETTE, SYSTEM AND METHOD	

Authorization or Opt-Out of Authorization to Permit Access:

When this Application Data Sheet is properly signed and filed with the application, applicant has provided written authority to permit a participating foreign intellectual property (IP) office access to the instant application-as-filed (see paragraph A in subsection 1 below) and the European Patent Office (EPO) access to any search results from the instant application (see paragraph B in subsection 1 below).

Should applicant choose not to provide an authorization identified in subsection 1 below, applicant **must opt-out** of the authorization by checking the corresponding box A or B or both in subsection 2 below.

NOTE: This section of the Application Data Sheet is **ONLY** reviewed and processed with the **INITIAL** filing of an application. After the initial filing of an application, an Application Data Sheet cannot be used to provide or rescind authorization for access by a foreign IP office(s). Instead, Form PTO/SB/39 or PTO/SB/69 must be used as appropriate.

1. Authorization to Permit Access by a Foreign Intellectual Property Office(s)

A. Priority Document Exchange (PDX) - Unless box A in subsection 2 (opt-out of authorization) is checked, the undersigned hereby **grants the USPTO authority** to provide the European Patent Office (EPO), the Japan Patent Office (JPO), the Korean Intellectual Property Office (KIPO), the State Intellectual Property Office of the People's Republic of China (SIPO), the World Intellectual Property Organization (WIPO), and any other foreign intellectual property office participating with the USPTO in a bilateral or multilateral priority document exchange agreement in which a foreign application claiming priority to the instant patent application is filed, access to: (1) the instant patent application-as-filed and its related bibliographic data, (2) any foreign or domestic application to which priority or benefit is claimed by the instant application and its related bibliographic data, and (3) the date of filing of this Authorization. See 37 CFR 1.14(h)(1).

B. Search Results from U.S. Application to EPO - Unless box B in subsection 2 (opt-out of authorization) is checked, the undersigned hereby **grants the USPTO authority** to provide the EPO access to the bibliographic data and search results from the instant patent application when a European patent application claiming priority to the instant patent application is filed. See 37 CFR 1.14(h)(2).

The applicant is reminded that the EPO's Rule 141(1) EPC (European Patent Convention) requires applicants to submit a copy of search results from the instant application without delay in a European patent application that claims priority to the instant application.

2. Opt-Out of Authorizations to Permit Access by a Foreign Intellectual Property Office(s)

☐ A. Applicant **DOES NOT** authorize the USPTO to permit a participating foreign IP office access to the instant application-as-filed. If this box is checked, the USPTO will not be providing a participating foreign IP office with any documents and information identified in subsection 1A above.

☐ B. Applicant **DOES NOT** authorize the USPTO to transmit to the EPO any search results from the instant patent application. If this box is checked, the USPTO will not be providing the EPO with search results from the instant application.

NOTE: Once the application has published or is otherwise publicly available, the USPTO may provide access to the application in accordance with 37 CFR 1.14.

Application Data Sheet 37 CFR 1.76	Attorney Docket Number	771/13569.451
	Application Number	**16/143,831**
Title of Invention	MODULAR ~~FIBRE~~ FIBER OPTIC CASSETTE, SYSTEM AND METHOD	

Applicant Information:

Providing assignment information in this section does not substitute for compliance with any requirement of part 3 of Title 37 of CFR to have an assignment recorded by the Office.

Applicant 1

If the applicant is the inventor (or the remaining joint inventor or inventors under 37 CFR 1.45), this section should not be completed. The information to be provided in this section is the name and address of the legal representative who is the applicant under 37 CFR 1.43; or the name and address of the assignee, person to whom the inventor is under an obligation to assign the invention, or person who otherwise shows sufficient proprietary interest in the matter who is the applicant under 37 CFR 1.46. If the applicant is an applicant under 37 CFR 1.46 (assignee, person to whom the inventor is obligated to assign, or person who otherwise shows sufficient proprietary interest) together with one or more joint inventors, then the joint inventor or inventors who are also the applicant should be identified in this section.

Clear

- (●) Assignee
- ( ) Legal Representative under 35 U.S.C. 117
- ( ) Joint Inventor
- ( ) Person to whom the inventor is obligated to assign.
- ( ) Person who shows sufficient proprietary interest

If applicant is the legal representative, indicate the authority to file the patent application, the inventor is:

Name of the Deceased or Legally Incapacitated Inventor:

If the Applicant is an Organization check here. ☒

Organization Name	BELDEN CANADA INC.		
Mailing Address Information For Applicant:			
Address 1	2310 ALFRED-NOBEL		
Address 2			
City	SAINT-LAURENT	**State/Province**	QC
Country	CA	Postal Code	H4S 2B4
Phone Number		Fax Number	
Email Address			

Additional Applicant Data may be generated within this form by selecting the Add button.

Assignee Information including Non-Applicant Assignee Information:

Providing assignment information in this section does not substitute for compliance with any requirement of part 3 of Title 37 of CFR to have an assignment recorded by the Office.

Application Data Sheet 37 CFR 1.76	Attorney Docket Number	771/13569.451
	Application Number	**16/143,831**
Title of Invention	MODULAR ~~FIBRE~~ FIBER OPTIC CASSETTE, SYSTEM AND METHOD	

Assignee 1

Complete this section if assignee information, including non-applicant assignee information, is desired to be included on the patent application publication. An assignee-applicant identified in the "Applicant Information" section will appear on the patent application publication as an applicant. For an assignee-applicant, complete this section only if identification as an assignee is also desired on the patent application publication.

If the Assignee or Non-Applicant Assignee is an Organization check here. ☐

Prefix	**Given Name**	Middle Name	**Family Name**	Suffix

Mailing Address Information For Assignee including Non-Applicant Assignee:

Address 1			
Address 2			
City		**State/Province**	
Country i		Postal Code	
Phone Number		Fax Number	
Email Address			

Additional Assignee or Non-Applicant Assignee Data may be generated within this form by selecting the Add button.

Signature:

NOTE: This Application Data Sheet must be signed in accordance with 37 CFR 1.33(b). **However, if this Application Data Sheet is submitted with the INITIAL filing of the application and either box A or B is not checked in subsection 2 of the "Authorization or Opt-Out of Authorization to Permit Access" section, then this form must also be signed in accordance with 37 CFR 1.14(c).**

This Application Data Sheet **must** be signed by a patent practitioner if one or more of the applicants is a **juristic entity** (e.g., corporation or association). If the applicant is two or more joint inventors, this form must be signed by a patent practitioner, **all** joint inventors who are the applicant, or one or more joint inventor-applicants who have been given power of attorney (e.g., see USPTO Form PTO/AIA/81) on behalf of **all** joint inventor-applicants.

See 37 CFR 1.4(d) for the manner of making signatures and certifications.

Signature	/HUGH MANSFIELD/			Date (YYYY-MM-DD)	~~2018-09-27~~ **2018/10/04**
First Name	HUGH	Last Name	MANSFIELD	Registration Number	55757

Additional Signature may be generated within this form by selecting the Add button.

Application Data Sheet 37 CFR 1.76		Attorney Docket Number	771/13569.451
		Application Number	**16/143,831**
Title of Invention	MODULAR ~~FIBRE~~ FIBER OPTIC CASSETTE, SYSTEM AND METHOD		

This collection of information is required by 37 CFR 1.76. The information is required to obtain or retain a benefit by the public which is to file (and by the USPTO to process) an application. Confidentiality is governed by 35 U.S.C. 122 and 37 CFR 1.14. This collection is estimated to take 23 minutes to complete, including gathering, preparing, and submitting the completed application data sheet form to the USPTO. Time will vary depending upon the individual case. Any comments on the amount of time you require to complete this form and/or suggestions for reducing this burden, should be sent to the Chief Information Officer, U.S. Patent and Trademark Office, U.S. Department of Commerce, P.O. Box 1450, Alexandria, VA 22313-1450. DO NOT SEND FEES OR COMPLETED FORMS TO THIS ADDRESS. **SEND TO: Commissioner for Patents, P.O. Box 1450, Alexandria, VA 22313-1450.**

Electronic Acknowledgement Receipt

EFS ID:	33916849
Application Number:	16143831
International Application Number:	
Confirmation Number:	4901
Title of Invention:	MODULAR FIBRE OPTIC CASSETTE, SYSTEM AND METHOD
First Named Inventor/Applicant Name:	VINCENT PILON
Customer Number:	25545
Filer:	Hugh Mansfield/Anna Fovero
Filer Authorized By:	Hugh Mansfield
Attorney Docket Number:	771/13569.451
Receipt Date:	04-OCT-2018
Filing Date:	
Time Stamp:	12:31:54
Application Type:	Utility under 35 USC 111(a)

Payment information:

Submitted with Payment	no

File Listing:

Document Number	Document Description	File Name	File Size(Bytes)/ Message Digest	Multi Part /.zip	Pages (if appl.)
1	Power of Attorney	Power-of-Attorney.pdf	341776 fe0c913d90d439d6909d97576ff7a842b9791230	no	1

Warnings:

Information:					
2	Assignee showing of ownership per 37 CFR 3.73	Statement.pdf	3466268 af8010965e5980b5e60e1e2b75c1197ee151d15a	no	5
Warnings:					
Information:					
3	Oath or Declaration filed	771-Declaration-Pilon-oct-1-2018.pdf	329983 b03cabdc4b06828ffced6c90400b5f7441bf53d	no	1
Warnings:					
Information:					
4	Application Data Sheet	aia0014-5.pdf	2987700 7324954625c1ddf81edfd74439a43857127c798d	no	7
Warnings:					
Information:					
This is not an USPTO supplied ADS fillable form					
			Total Files Size (in bytes):	7125727	

This Acknowledgement Receipt evidences receipt on the noted date by the USPTO of the indicated documents, characterized by the applicant, and including page counts, where applicable. It serves as evidence of receipt similar to a Post Card, as described in MPEP 503.

<u>New Applications Under 35 U.S.C. 111</u>
If a new application is being filed and the application includes the necessary components for a filing date (see 37 CFR 1.53(b)-(d) and MPEP 506), a Filing Receipt (37 CFR 1.54) will be issued in due course and the date shown on this Acknowledgement Receipt will establish the filing date of the application.
<u>National Stage of an International Application under 35 U.S.C. 371</u>
If a timely submission to enter the national stage of an international application is compliant with the conditions of 35 U.S.C. 371 and other applicable requirements a Form PCT/DO/EO/903 indicating acceptance of the application as a national stage submission under 35 U.S.C. 371 will be issued in addition to the Filing Receipt, in due course.
<u>New International Application Filed with the USPTO as a Receiving Office</u>
If a new international application is being filed and the international application includes the necessary components for an international filing date (see PCT Article 11 and MPEP 1810), a Notification of the International Application Number and of the International Filing Date (Form PCT/RO/105) will be issued in due course, subject to prescriptions concerning national security, and the date shown on this Acknowledgement Receipt will establish the international filing date of the application.

UNITED STATES PATENT AND TRADEMARK OFFICE

UNITED STATES DEPARTMENT OF COMMERCE
United States Patent and Trademark Office
Address: COMMISSIONER FOR PATENTS
P.O. Box 1450
Alexandria, Virginia 22313-1450
www.uspto.gov

APPLICATION NUMBER	FILING or 371(c) DATE	GRP ART UNIT	FIL FEE REC'D	ATTY.DOCKET.NO	TOT CLAIMS	IND CLAIMS
16/143,831	09/27/2018	2883	1880	771/13569.451	16	3

CONFIRMATION NO. 4901

FILING RECEIPT

OC000000103149394

25545
Lavery, De Billy, LLP
1 Place Ville Marie, Suite 4000
Montreal, QC H3B 4M4
CANADA

Date Mailed: 10/19/2018

Receipt is acknowledged of this non-provisional patent application. The application will be taken up for examination in due course. Applicant will be notified as to the results of the examination. Any correspondence concerning the application must include the following identification information: the U.S. APPLICATION NUMBER, FILING DATE, NAME OF APPLICANT, and TITLE OF INVENTION. Fees transmitted by check or draft are subject to collection. Please verify the accuracy of the data presented on this receipt. **If an error is noted on this Filing Receipt, please submit a written request for a Filing Receipt Correction. Please provide a copy of this Filing Receipt with the changes noted thereon. If you received a "Notice to File Missing Parts" for this application, please submit any corrections to this Filing Receipt with your reply to the Notice. When the USPTO processes the reply to the Notice, the USPTO will generate another Filing Receipt incorporating the requested corrections**

Inventor(s)

VINCENT PILON, LACHINE, CANADA;

Applicant(s)

BELDEN CANADA INC., Saint-laurent, CANADA;

Power of Attorney: The patent practitioners associated with Customer Number 25545

Domestic Priority data as claimed by applicant

This appln claims benefit of 62/567,339 10/03/2017

Foreign Applications for which priority is claimed (You may be eligible to benefit from the **Patent Prosecution Highway** program at the USPTO. Please see http://www.uspto.gov for more information.) - None.
Foreign application information must be provided in an Application Data Sheet in order to constitute a claim to foreign priority. See 37 CFR 1.55 and 1.76.

Permission to Access Application via Priority Document Exchange: Yes

Permission to Access Search Results: Yes

Applicant may provide or rescind an authorization for access using Form PTO/SB/39 or Form PTO/SB/69 as appropriate.

If Required, Foreign Filing License Granted: 10/17/2018
The country code and number of your priority application, to be used for filing abroad under the Paris Convention, is **US 16/143,831**
Projected Publication Date: 04/04/2019

Non-Publication Request: No

Early Publication Request: No
Title

MODULAR FIBER OPTIC CASSETTE, SYSTEM AND METHOD

Preliminary Class

385

Statement under 37 CFR 1.55 or 1.78 for AIA (First Inventor to File) Transition Applications: No

PROTECTING YOUR INVENTION OUTSIDE THE UNITED STATES

Since the rights granted by a U.S. patent extend only throughout the territory of the United States and have no effect in a foreign country, an inventor who wishes patent protection in another country must apply for a patent in a specific country or in regional patent offices. Applicants may wish to consider the filing of an international application under the Patent Cooperation Treaty (PCT). An international (PCT) application generally has the same effect as a regular national patent application in each PCT-member country. The PCT process **simplifies** the filing of patent applications on the same invention in member countries, but **does not result** in a grant of "an international patent" and does not eliminate the need of applicants to file additional documents and fees in countries where patent protection is desired.

Almost every country has its own patent law, and a person desiring a patent in a particular country must make an application for patent in that country in accordance with its particular laws. Since the laws of many countries differ in various respects from the patent law of the United States, applicants are advised to seek guidance from specific foreign countries to ensure that patent rights are not lost prematurely.

Applicants also are advised that in the case of inventions made in the United States, the Director of the USPTO must issue a license before applicants can apply for a patent in a foreign country. The filing of a U.S. patent application serves as a request for a foreign filing license. The application's filing receipt contains further information and guidance as to the status of applicant's license for foreign filing.

Applicants may wish to consult the USPTO booklet, "General Information Concerning Patents" (specifically, the section entitled "Treaties and Foreign Patents") for more information on timeframes and deadlines for filing foreign patent applications. The guide is available either by contacting the USPTO Contact Center at 800-786-9199, or it can be viewed on the USPTO website at http://www.uspto.gov/web/offices/pac/doc/general/index.html.

For information on preventing theft of your intellectual property (patents, trademarks and copyrights), you may wish to consult the U.S. Government website, http://www.stopfakes.gov. Part of a Department of Commerce initiative, this website includes self-help "toolkits" giving innovators guidance on how to protect intellectual property in specific countries such as China, Korea and Mexico. For questions regarding patent enforcement issues, applicants may call the U.S. Government hotline at 1-866-999-HALT (1-866-999-4258).

LICENSE FOR FOREIGN FILING UNDER

Title 35, United States Code, Section 184

Title 37, Code of Federal Regulations, 5.11 & 5.15

GRANTED

The applicant has been granted a license under 35 U.S.C. 184, if the phrase "IF REQUIRED, FOREIGN FILING LICENSE GRANTED" followed by a date appears on this form. Such licenses are issued in all applications where the conditions for issuance of a license have been met, regardless of whether or not a license may be required as set forth in 37 CFR 5.15. The scope and limitations of this license are set forth in 37 CFR 5.15(a) unless an earlier license has been issued under 37 CFR 5.15(b). The license is subject to revocation upon written notification. The date indicated is the effective date of the license, unless an earlier license of similar scope has been granted under 37 CFR 5.13 or 5.14.

This license is to be retained by the licensee and may be used at any time on or after the effective date thereof unless it is revoked. This license is automatically transferred to any related applications(s) filed under 37 CFR 1.53(d). This license is not retroactive.

The grant of a license does not in any way lessen the responsibility of a licensee for the security of the subject matter as imposed by any Government contract or the provisions of existing laws relating to espionage and the national security or the export of technical data. Licensees should apprise themselves of current regulations especially with respect to certain countries, of other agencies, particularly the Office of Defense Trade Controls, Department of State (with respect to Arms, Munitions and Implements of War (22 CFR 121-128)); the Bureau of Industry and Security, Department of Commerce (15 CFR parts 730-774); the Office of Foreign AssetsControl, Department of Treasury (31 CFR Parts 500+) and the Department of Energy.

NOT GRANTED

No license under 35 U.S.C. 184 has been granted at this time, if the phrase "IF REQUIRED, FOREIGN FILING LICENSE GRANTED" DOES NOT appear on this form. Applicant may still petition for a license under 37 CFR 5.12, if a license is desired before the expiration of 6 months from the filing date of the application. If 6 months has lapsed from the filing date of this application and the licensee has not received any indication of a secrecy order under 35 U.S.C. 181, the licensee may foreign file the application pursuant to 37 CFR 5.15(b).

SelectUSA

The United States represents the largest, most dynamic marketplace in the world and is an unparalleled location for business investment, innovation, and commercialization of new technologies. The U.S. offers tremendous resources and advantages for those who invest and manufacture goods here. Through SelectUSA, our nation works to promote and facilitate business investment. SelectUSA provides information assistance to the international investor community; serves as an ombudsman for existing and potential investors; advocates on behalf of U.S. cities, states, and regions competing for global investment; and counsels U.S. economic development organizations on investment attraction best practices. To learn more about why the United States is the best country in the world to develop technology, manufacture products, deliver services, and grow your business, visit http://www.SelectUSA.gov or call +1-202-482-6800.

PATENT APPLICATION FEE DETERMINATION RECORD Substitute for Form PTO-875	Application or Docket Number 16/143,831

APPLICATION AS FILED - PART I

FOR	(Column 1) NUMBER FILED	(Column 2) NUMBER EXTRA	SMALL ENTITY RATE($)	SMALL ENTITY FEE($)	OR	OTHER THAN SMALL ENTITY RATE($)	OTHER THAN SMALL ENTITY FEE($)
BASIC FEE (37 CFR 1.16(a), (b), or (c))	N/A	N/A	N/A			N/A	300
SEARCH FEE (37 CFR 1.16(k), (i), or (m))	N/A	N/A	N/A			N/A	660
EXAMINATION FEE (37 CFR 1.16(o), (p), or (q))	N/A	N/A	N/A			N/A	760
TOTAL CLAIMS (37 CFR 1.16(i))	16 minus 20 =	*			OR	x 100 =	0.00
INDEPENDENT CLAIMS (37 CFR 1.16(h))	3 minus 3 =	*				x 460 =	0.00
APPLICATION SIZE FEE (37 CFR 1.16(s))	If the specification and drawings exceed 100 sheets of paper, the application size fee due is $310 ($155 for small entity) for each additional 50 sheets or fraction thereof. See 35 U.S.C. 41(a)(1)(G) and 37 CFR 1.16(s).						0.00
MULTIPLE DEPENDENT CLAIM PRESENT (37 CFR 1.16(j))							0.00
* If the difference in column 1 is less than zero, enter "0" in column 2.			TOTAL			TOTAL	1720

APPLICATION AS AMENDED - PART II

		(Column 1) CLAIMS REMAINING AFTER AMENDMENT		(Column 2) HIGHEST NUMBER PREVIOUSLY PAID FOR	(Column 3) PRESENT EXTRA	SMALL ENTITY RATE($)	SMALL ENTITY ADDITIONAL FEE($)	OR	OTHER THAN SMALL ENTITY RATE($)	OTHER THAN SMALL ENTITY ADDITIONAL FEE($)
AMENDMENT A	Total (37 CFR 1.16(i))	*	Minus	**	=	x =		OR	x =	
AMENDMENT A	Independent (37 CFR 1.16(h))	*	Minus	***	=	x =		OR	x =	
AMENDMENT A	Application Size Fee (37 CFR 1.16(s))									
AMENDMENT A	FIRST PRESENTATION OF MULTIPLE DEPENDENT CLAIM (37 CFR 1.16(j))							OR		
						TOTAL ADD'L FEE		OR	TOTAL ADD'L FEE	

		(Column 1) CLAIMS REMAINING AFTER AMENDMENT		(Column 2) HIGHEST NUMBER PREVIOUSLY PAID FOR	(Column 3) PRESENT EXTRA	RATE($)	ADDITIONAL FEE($)		RATE($)	ADDITIONAL FEE($)
AMENDMENT B	Total (37 CFR 1.16(i))	*	Minus	**	=	x =		OR	x =	
AMENDMENT B	Independent (37 CFR 1.16(h))	*	Minus	***	=	x =		OR	x =	
AMENDMENT B	Application Size Fee (37 CFR 1.16(s))									
AMENDMENT B	FIRST PRESENTATION OF MULTIPLE DEPENDENT CLAIM (37 CFR 1.16(j))							OR		
						TOTAL ADD'L FEE		OR	TOTAL ADD'L FEE	

* If the entry in column 1 is less than the entry in column 2, write "0" in column 3.
** If the "Highest Number Previously Paid For" IN THIS SPACE is less than 20, enter "20".
*** If the "Highest Number Previously Paid For" IN THIS SPACE is less than 3, enter "3".
The "Highest Number Previously Paid For" (Total or Independent) is the highest found in the appropriate box in column 1.

UNITED STATES PATENT AND TRADEMARK OFFICE

UNITED STATES DEPARTMENT OF COMMERCE
United States Patent and Trademark Office
Address: COMMISSIONER FOR PATENTS
P.O. Box 1450
Alexandria, Virginia 22313-1450
www.uspto.gov

APPLICATION NUMBER	FILING OR 371(C) DATE	FIRST NAMED APPLICANT	ATTY. DOCKET NO./TITLE
16/143,831	09/27/2018	VINCENT PILON	771/13569.451

CONFIRMATION NO. 4901

PUBLICATION NOTICE

OC000000107137085

25545
Lavery, De Billy, LLP
1 Place Ville Marie, Suite 4000
Montreal, QC H3B 4M4
CANADA

Title:MODULAR FIBER OPTIC CASSETTE, SYSTEM AND METHOD

Publication No.US-2019-0101717-A1
Publication Date:04/04/2019

NOTICE OF PUBLICATION OF APPLICATION

The above-identified application will be electronically published as a patent application publication pursuant to 37 CFR 1.211, et seq. The patent application publication number and publication date are set forth above.

The publication may be accessed through the USPTO's publically available Searchable Databases via the Internet at www.uspto.gov. The direct link to access the publication is currently http://www.uspto.gov/patft/.

The publication process established by the Office does not provide for mailing a copy of the publication to applicant. A copy of the publication may be obtained from the Office upon payment of the appropriate fee set forth in 37 CFR 1.19(a)(1). Orders for copies of patent application publications are handled by the USPTO's Public Records Division. The Public Records Division can be reached by telephone at (571) 272-3150 or (800) 972-6382, by facsimile at (571) 273-3250, by mail addressed to the United States Patent and Trademark Office, Public Records Division, Alexandria, VA 22313-1450 or via the Internet.

In addition, information on the status of the application, including the mailing date of Office actions and the dates of receipt of correspondence filed in the Office, may also be accessed via the Internet through the Patent Electronic Business Center at www.uspto.gov using the public side of the Patent Application Information and Retrieval (PAIR) system. The direct link to access this status information is currently https://portal.uspto.gov/pair/PublicPair. Prior to publication, such status information is confidential and may only be obtained by applicant using the private side of PAIR.

Further assistance in electronically accessing the publication, or about PAIR, is available by calling the Patent Electronic Business Center at 1-866-217-9197.

Office of Data Managment, Application Assistance Unit (571) 272-4000, or (571) 272-4200, or 1-888-786-0101

UNITED STATES PATENT AND TRADEMARK OFFICE

UNITED STATES DEPARTMENT OF COMMERCE
United States Patent and Trademark Office
Address: COMMISSIONER FOR PATENTS
P.O. Box 1450
Alexandria, Virginia 22313-1450
www.uspto.gov

APPLICATION NO.	FILING DATE	FIRST NAMED INVENTOR	ATTORNEY DOCKET NO.	CONFIRMATION NO.
16/143,831	09/27/2018	VINCENT PILON	771/13569.451	4901

25545 7590 04/29/2019
Lavery, De Billy, LLP
1 Place Ville Marie, Suite 4000
Montreal, QUEBEC H3B 4M4
CANADA

EXAMINER
PEACE, RHONDA S

ART UNIT	PAPER NUMBER
2874	

NOTIFICATION DATE	DELIVERY MODE
04/29/2019	ELECTRONIC

Please find below and/or attached an Office communication concerning this application or proceeding.

The time period for reply, if any, is set in the attached communication.

Notice of the Office communication was sent electronically on above-indicated "Notification Date" to the following e-mail address(es):

afovero@lavery.ca

PTOL-90A (Rev. 04/07)

Office Action Summary	Application No. 16/143,831	Applicant(s) PILON, VINCENT	
	Examiner R. PEACE	Art Unit 2874	AIA (FITF) Status Yes

-- The MAILING DATE of this communication appears on the cover sheet with the correspondence address --

Period for Reply

A SHORTENED STATUTORY PERIOD FOR REPLY IS SET TO EXPIRE 3 MONTHS FROM THE MAILING DATE OF THIS COMMUNICATION.

- Extensions of time may be available under the provisions of 37 CFR 1.136(a). In no event, however, may a reply be timely filed after SIX (6) MONTHS from the mailing date of this communication.
- If NO period for reply is specified above, the maximum statutory period will apply and will expire SIX (6) MONTHS from the mailing date of this communication.
- Failure to reply within the set or extended period for reply will, by statute, cause the application to become ABANDONED (35 U.S.C. § 133). Any reply received by the Office later than three months after the mailing date of this communication, even if timely filed, may reduce any earned patent term adjustment. See 37 CFR 1.704(b).

Status

1)☐ Responsive to communication(s) filed on _____.

☐ A declaration(s)/affidavit(s) under **37 CFR 1.130(b)** was/were filed on _____.

2a)☐ This action is **FINAL.** 2b) ☑ This action is non-final.

3)☐ An election was made by the applicant in response to a restriction requirement set forth during the interview on _____; the restriction requirement and election have been incorporated into this action.

4)☐ Since this application is in condition for allowance except for formal matters, prosecution as to the merits is closed in accordance with the practice under *Ex parte Quayle*, 1935 C.D. 11, 453 O.G. 213.

Disposition of Claims*

5) ☑ Claim(s) 1-16 is/are pending in the application.

5a) Of the above claim(s) _____ is/are withdrawn from consideration.

6) ☐ Claim(s) _____ is/are allowed.

7) ☑ Claim(s) 1-16 is/are rejected.

8) ☐ Claim(s) _____ is/are objected to.

9) ☐ Claim(s) _____ are subject to restriction and/or election requirement

* If any claims have been determined allowable, you may be eligible to benefit from the **Patent Prosecution Highway** program at a participating intellectual property office for the corresponding application. For more information, please see http://www.uspto.gov/patents/init_events/pph/index.jsp or send an inquiry to **PPHfeedback@uspto.gov.**

Application Papers

10)☐ The specification is objected to by the Examiner.

11)☑ The drawing(s) filed on 9/27/18 is/are: a)☑ accepted or b)☐ objected to by the Examiner.

Applicant may not request that any objection to the drawing(s) be held in abeyance. See 37 CFR 1.85(a).

Replacement drawing sheet(s) including the correction is required if the drawing(s) is objected to. See 37 CFR 1.121(d).

Priority under 35 U.S.C. § 119

12)☐ Acknowledgment is made of a claim for foreign priority under 35 U.S.C. § 119(a)-(d) or (f).

Certified copies:

a)☐ All b)☐ Some** c)☐ None of the:

1.☐ Certified copies of the priority documents have been received.

2.☐ Certified copies of the priority documents have been received in Application No. _____.

3.☐ Copies of the certified copies of the priority documents have been received in this National Stage application from the International Bureau (PCT Rule 17.2(a)).

** See the attached detailed Office action for a list of the certified copies not received.

Attachment(s)

1) ☑ Notice of References Cited (PTO-892)

2) ☐ Information Disclosure Statement(s) (PTO/SB/08a and/or PTO/SB/08b) Paper No(s)/Mail Date _____.

3) ☐ Interview Summary (PTO-413) Paper No(s)/Mail Date _____.

4) ☐ Other: _____.

DETAILED ACTION

Notice of Pre-AIA or AIA Status

The present application, filed on or after March 16, 2013, is being examined under the first inventor to file provisions of the AIA.

Claim Rejections - 35 USC § 112

The following is a quotation of 35 U.S.C. 112(b):
(b) CONCLUSION.—The specification shall conclude with one or more claims particularly pointing out and distinctly claiming the subject matter which the inventor or a joint inventor regards as the invention.

The following is a quotation of 35 U.S.C. 112 (pre-AIA), second paragraph:
The specification shall conclude with one or more claims particularly pointing out and distinctly claiming the subject matter which the applicant regards as his invention.

Claim 16 rejected under 35 U.S.C. 112(b) or 35 U.S.C. 112 (pre-AIA), second paragraph, as being indefinite for failing to particularly point out and distinctly claim the subject matter which the inventor or a joint inventor, or for pre-AIA the applicant regards as the invention.

Claim 16 recites the limitation "The modular fiber optic cassette" in line 1 and “the modular cassettes” in line 3. There is insufficient antecedent basis for this limitation in the claim. For purposes of examination, claim 16 is considered dependent on claim 15, instead of claim 14, to remedy the antecedent basis issue.

Claim Rejections - 35 USC § 102

In the event the determination of the status of the application as subject to AIA 35 U.S.C. 102 and 103 (or as subject to pre-AIA 35 U.S.C. 102 and 103) is incorrect, any correction of the statutory basis for the rejection will not be considered a new ground of

rejection if the prior art relied upon, and the rationale supporting the rejection, would be the same under either status.

The following is a quotation of the appropriate paragraphs of 35 U.S.C. 102 that form the basis for the rejections under this section made in this Office action:

> A person shall be entitled to a patent unless –
>
> (a)(2) the claimed invention was described in a patent issued under section 151, or in an application for patent published or deemed published under section 122(b), in which the patent or application, as the case may be, names another inventor and was effectively filed before the effective filing date of the claimed invention.

Claim(s) 1-5 and 9-14 is/are rejected under 35 U.S.C. 102(a)(2) as being anticipated by Sedor et al (US 10,215,944 B2).

Re. Claim 1, Sedor et al discloses a modular fiber optic cassette system 50 (Fig 1A; col. 4 lines 14-16), the system comprising:

a case 100 comprising a top wall 102 and a bottom wall 112 and two opposed side walls 104/106, each of said sidewalls 104/106 attached between respective side edges of said top and bottom wall 102/112, said walls together defining a tray receiving space there between and a forward edge of each said wall together defining an opening to said tray receiving space (Figs 1A and 2A-2C; col. 4 lines 36-51);

at least one tray 120 slideably received within said tray receiving space for movement between a stored position wherein said tray 120 is completely inside said tray receiving space and an accessible position wherein a front end of said tray 120 is in front of said opening and outside of said tray receiving space (Figs 1A, 1B, and 5; col. 4 lines 62-67; col. 5 lines 1-22);

a set of fiber optic cassettes 30/40, a selected plurality of the cassettes arrangeable side by side along said tray front end wherein each of said cassettes comprises a plurality of optic plug receiving receptacles arranged side by side in a row along a front thereof, a first 40 of said set of cassettes 30/40 comprising a first cassette width of one of one, two, three, four and six standard width units (i.e. first cassette 40 has a width of two standard width units; Figs 9-10) and a second of said cassettes 30 comprising a second cassette width different from said first cassette width and one of one, two, three, four and six standard width units (i.e. second cassette 30 of Figs 7-8 has a width of three standard width units) (Figs 7-10; col. 4 lines 19-35; col. 5 lines 39-47); and

a fastener 180 for removeably securing each of said cassettes 30/40 to said tray 120 (Figs 6B and 7-10; col. 5 lines 23-47).

It is of note, for purposes of Sedor et al, one standardized width unit accommodates four receptacles, as in the current invention.

Re. Claim 2, Sedor et al discloses said tray 120 has a width dimensioned to receive at least twelve standard width units side by side (Figs 7-10; col. 5 lines 35-51).

Re. Claim 3, Sedor et al discloses each of said cassettes 30/40 comprises a multi-fiber connector receiving receptacle arranged on a rear thereof and a plurality of optic fibers, one of said optic fibers interconnecting a respective one of said optic plug receiving receptacles with said multi fiber connector receiving receptacle (Figs 7-10; col. 4 lines 23-31).

Re. Claim 4, Sedor et al discloses each of said cassettes 30/40 comprises four fiber optic plug receiving receptacles arranged side by side in a row along a front thereof for each standard width unit (Figs 7-10; col. 4 lines 19-35; col. 5 lines 39-47).

Re. Claim 5, Sedor et al discloses said system 50 is for mounting in a rack 2/4 and further comprising a pair of mounting brackets 108, one of said brackets 108 attached to each of said sidewalls 104/106 on either side of an outside of said case 100, said mounting brackets 108 for securing said case 100 to the rack 2/4 (Fig 1A; col. 4 lines 51-54).

Re. Claim 9, Sedor et al discloses a method for organizing a tray comprising a front edge in a fiber optic interconnect system, the method comprising:

defining a standard width unit wherein a width of the front edge is substantially evenly divisible by said standard width unit (col. 1 lines 24-32);

selecting a plurality of cassettes for installation on the tray from a set of cassettes 30/40 having a plurality of different widths (i.e. cassette 40 of Figs 9-10 has a width of two standard width units; second cassette 30 of Figs 7-8 has a width of three standard width units), wherein each of said different widths is evenly divisible by said standard width unit (Figs 7-10; col. 4 lines 19-35; col. 5 lines 39-47); and

releasably securing said selected cassettes along the front edge of the tray 120 (Figs 6B and 7-10; col. 5 lines 23-47).

Re. Claim 10, Sedor et al discloses said set of cassettes 30/40 comprises cassettes comprising widths of one, two, three, four and six standard width units (i.e. cassette 40 of Figs 9-10 has a width of two standard width units; second cassette 30 of

Figs 7-8 has a width of three standard width units) (Figs 7-10; col. 4 lines 19-35; col. 5 lines 39-47).

Re. Claim 11, Sedor et al discloses said selected cassettes all comprise the same width, for example Figures 7 and 8 show the tray filled with cassettes 30 while Figures 9-10 show the tray filled with cassettes 40.

Re. Claim 12, Sedor et al discloses said selected cassettes comprise a first cassette having a first width and a second cassette having a second width different from said first width, for example when a tray 120 is rearranged to accommodate cassettes having a different size from those previously installed on the tray (col. 5 lines 35-47).

Re. Claim 13, Sedor et al discloses the width of the front edge is substantially evenly divisible by a maximum of twelve (12) of said standard width units (Figs 7-10; col. 5 lines 35-51).

Re. Claim 14, Sedor et al discloses said selected cassettes further comprise a third cassette 20 comprising a third width different from said first width and said second width (Figs 11-12; col. 4 lines 19-31; col. 5 lines 48-51).

Claim Rejections - 35 USC § 103

In the event the determination of the status of the application as subject to AIA 35 U.S.C. 102 and 103 (or as subject to pre-AIA 35 U.S.C. 102 and 103) is incorrect, any correction of the statutory basis for the rejection will not be considered a new ground of rejection if the prior art relied upon, and the rationale supporting the rejection, would be the same under either status.

The following is a quotation of 35 U.S.C. 103 which forms the basis for all obviousness rejections set forth in this Office action:

> A patent for a claimed invention may not be obtained, notwithstanding that the claimed invention is not identically disclosed as set forth in section 102, if the differences between the claimed invention and the prior art are such that the claimed invention as a whole would have been obvious before the effective filing date of the claimed invention to a person having ordinary skill in the art to which the claimed invention pertains. Patentability shall not be negated by the manner in which the invention was made.

The factual inquiries set forth in *Graham v. John Deere Co.*, 383 U.S. 1, 148 USPQ 459 (1966), that are applied for establishing a background for determining obviousness under 35 U.S.C. 103 are summarized as follows:

1. Determining the scope and contents of the prior art.

2. Ascertaining the differences between the prior art and the claims at issue.

3. Resolving the level of ordinary skill in the pertinent art.

4. Considering objective evidence present in the application indicating obviousness or nonobviousness.

Claims 6, 7, 15, and 16 is/are rejected under 35 U.S.C. 103 as being unpatentable over Sedor et al (US 10,215,944 B2) and Nelson et al (US 4,792,203).

Re. Claims 6, 7, and 15, Sedor et al discloses the modular fiber optic cassette system as discussed above. Additionally, Sedor et al discloses a modular fiber optic cassette 30/40 for releasably securing to a tray 120, comprising:

an elongate rectangular optic fiber receiving housing (Figs 7-10; col. 4 lines 19-35);

a plurality of optic plug receiving receptacles arranged in a row along a front of said housing (Figs 7-10; col. 4 lines 23-26);

a multi fiber connector receiving receptacle on a rear thereof (Figs 7-10; col. 4 lines 23-26);

a plurality of optic fibers interconnecting a respective one of said optic plug receiving receptacles with said multi fiber connector receiving receptacle (col. 1 lines 21-23; col. 4 lines 23-26); and

a fastener 180 secured to an underside of said housing (i.e. an outer bottom edge of the housing slides and is retained on a portion of the fastener 180 (Figs 6B and 26A-26B; col. 7 lines 1-29).

In Sedor et al, the fastener 180 is a rail that is removeably coupled to the tray 120, specifically protrusions on the rail mate with holes on the tray (Figs 5, 6B, 7-10, and 13A-13C; col. 5 lines 23-67; col. 6 lines 1-4). Sedor et al does not disclose alternative coupling means, such as magnetic coupling, between the fastener 180 and the tray 120. That is to say, Sedor et al does not disclose the tray being fabricated from a *ferrous metal* and the fastener comprising a *magnet*.

The use of a magnetic coupling arrangement for attaching a magnetic rail to a metallic tray surface is well known in the optical arts, as seen by Nelson et al. Nelson et al discloses a magnetic rail 60/62 for coupling to a ferrous metal tray 24 (Fig 6; col. 5 lines 24-35).

It would have been obvious to one of ordinary skill in the art to utilize a metal tray and a fastener comprising a magnet in the system of Sedor et al, since the same is a well-known arrangement of the art as evidences by Nelson et al, and is capable of achieving the attachment/detachment/reattachment nature of the fastener as desired by Sedor et al.

The claim would have been obvious because the substitution of one known element for another (i.e. the substitution of magnetized fastening means for

protrusion/aperture fastener means) would have yielded predictable results to one of ordinary skill in the art at the time of the invention. *KSR International Co. v. Teleflex Inc.*, 550 USPQ2d 1385 (2007).

Re. Claim 16, Sedor et al and Nelson et al render obvious the modular fiber optic cassette for the reasons discussed above. As discussed in the previous section, Sedor et al discloses the tray has a tray width substantially evenly divisible by a plurality of standard width units (col. 1 lines 24-32), wherein a plurality of the modular cassettes are arrangeable side by side along a front end of the tray (Figs 7-10) and further wherein said cassette comprise a cassette width of one of one, two, three, four and six standard width units (i.e. cassette 40 of Figs 9-10 has a width of two standard width units; second cassette 30 of Figs 7-8 has a width of three standard width units) (Figs 7-10; col. 4 lines 19-35; col. 5 lines 39-47).

Claim 8 is/are rejected under 35 U.S.C. 103 as being unpatentable over Sedor et al (US 10,215,944 B2) and Giraud et al (US 2016/0062050 A1).

Re. Claim 8, Sedor et al discloses the modular fiber optic cassette system of as discussed above.

However, Sedor et al does not disclose the system as further comprising *at least one elongate cable management bracket comprising a cable management loop and a fastener for removeably securing said at least one bracket to said tray, said bracket having a bracket width of one of said standard width units and further wherein when installed on said tray adjacent an installed one of said cassettes, said cable*

management loop is positioned in front of and to a side of said plurality of optic plug receiving receptacles of said installed cassette.

Giraud et al discloses a modular fiber optic cassette system comprising a case 300 (Fig 3A; [0060]) for retaining at least one slideable tray 100 (Figs 2A and 2B; [0056]-[0057]), the tray 100 comprising a plurality of cassettes 10 (Figs 1A, 2A-2B, and [0053]) and at least one elongate cable management bracket 400 (Figs 6-7; [0066]) attached thereto, the cable management bracket 400 comprising a cable loop and a fastener 422 for removeably securing said at least one bracket 400 to said tray 100 (Figs 6-7; [0067]), said bracket 400 having a bracket width of one of said standard width units ([0066]) and further wherein when installed on said tray adjacent an installed one of said cassettes, said cable loop is positioned in front of and to a side of said plurality of optic plug receiving receptacles of said installed cassette (Fig 7).

It would have been obvious to one of ordinary skill at the time the invention was effectively filed to include the cable management bracket of Giraud et al in the system of Sedor et al, since Giraud et al discloses the cable management bracket provides the network operator flexibility in the optical network to make moves, adds, and changes to transmission protocol as desired while maintaining a neat and orderly cable deployment and routing for the data center (Giraud et al: [0065]).

While Giraud et al discloses a cable loop is formed at the forward end of the bracket 400 (i.e. cable looped from adapter 418 through cut-out 411; Fig 6-7; [0066]-[0067]), Giraud et al fails to disclose *a cable management loop* to support said cable loop.

The use of management loops to support a looped length of optical cable is well known in the art, and commonly used to impact structural stability of the cable loop, thereby minimizing damage to the cable. The claimed cable management loop would have been obvious to one of ordinary skill for the purpose of minimizing damage to the optical cable of Giraud et al. "A person of ordinary skill is also a person of ordinary creativity, not an automaton" – '[w]hen there is a design need or market pressure to solve a problem and there are a finite number of identified, predictable solutions, a person of ordinary skill has good reason to pursue the known options within his or her technical grasp. If this leads to the anticipated success, it is likely the product not of innovation but of ordinary skill and common sense." *KSR International Co. v. Teleflex Inc.*, 550 USPQ2d 1385 (2007).

Conclusion

The prior art made of record and not relied upon is considered pertinent to applicant's disclosure.

Any inquiry concerning this communication or earlier communications from the examiner should be directed to R. PEACE whose telephone number is (571)272-8580. The examiner can normally be reached on 9-5 pm.

Examiner interviews are available via telephone, in-person, and video conferencing using a USPTO supplied web-based collaboration tool. To schedule an interview, applicant is encouraged to use the USPTO Automated Interview Request (AIR) at http://www.uspto.gov/interviewpractice.

If attempts to reach the examiner by telephone are unsuccessful, the examiner's supervisor, Uyen-Chau Le can be reached on (571) 272-2397. The fax phone number for the organization where this application or proceeding is assigned is 571-273-8300.

Information regarding the status of an application may be obtained from the Patent Application Information Retrieval (PAIR) system. Status information for published applications may be obtained from either Private PAIR or Public PAIR. Status information for unpublished applications is available through Private PAIR only. For more information about the PAIR system, see http://pair-direct.uspto.gov. Should you have questions on access to the Private PAIR system, contact the Electronic Business Center (EBC) at 866-217-9197 (toll-free). If you would like assistance from a USPTO Customer Service Representative or access to the automated information system, call 800-786-9199 (IN USA OR CANADA) or 571-272-1000.

/RHONDA S PEACE/
Primary Examiner, Art Unit 2874
4/24/19

Notice of References Cited	Application/Control No. 16/143,831	Applicant(s)/Patent Under Reexamination PILON, VINCENT	
	Examiner R. PEACE	Art Unit 2874	Page 1 of 1

U.S. PATENT DOCUMENTS

*		Document Number Country Code-Number-Kind Code	Date MM-YYYY	Name	CPC Classification	US Classification
*	A	US-20090290842-A1	11-2009	Bran de Leon; Oscar Fernando	G02B6/4454	385/135
*	B	US-20160062050-A1	03-2016	Giraud; William Julius McPhil	G02B6/3825	385/56
*	C	US-10215944-B2	02-2019	Sedor; Thomas M.	G02B6/3897	1/1
*	D	US-20190004268-A1	01-2019	Vogel; Mark A.	G02B6/4452	1/1
*	E	US-20190101717-A1	04-2019	PILON; VINCENT	G02B6/4455	1/1
*	F	US-4792203-A	12-1988	Nelson; Calvin G.	G02B6/24	385/134
	G					
	H					
	I					
	J					
	K					
	L					
	M					

FOREIGN PATENT DOCUMENTS

*		Document Number Country Code-Number-Kind Code	Date MM-YYYY	Country	Name	CPC Classification
	N					
	O					
	P					
	Q					
	R					
	S					
	T					

NON-PATENT DOCUMENTS

*		Include as applicable: Author, Title Date, Publisher, Edition or Volume, Pertinent Pages)
	U	
	V	
	W	
	X	

*A copy of this reference is not being furnished with this Office action. (See MPEP § 707.05(a).)
Dates in MM-YYYY format are publication dates. Classifications may be US or foreign.

U.S. Patent and Trademark Office
PTO-892 (Rev. 01-2001) **Notice of References Cited** Part of Paper No. 20190423

Search Notes	Application/Control No.	Applicant(s)/Patent Under Reexamination
	16/143,831	PILON, VINCENT
	Examiner	**Art Unit**
	R. PEACE	2874

CPC - Searched*		
Symbol	**Date**	**Examiner**
G02B 6/4455	04/23/2019	RSP

CPC Combination Sets - Searched*		
Symbol	**Date**	**Examiner**

US Classification - Searched*			
Class	**Subclass**	**Date**	**Examiner**

* See search history printout included with this form or the SEARCH NOTES box below to determine the scope of the search.

Search Notes		
Search Notes	**Date**	**Examiner**
global dossier search	04/23/2019	RSP
inventor and assignee searches	04/23/2019	RSP
see attached EAST search history report	04/24/2019	RSP

Interference Search			
US Class/CPC Symbol	**US Subclass/CPC Group**	**Date**	**Examiner**

/RHONDA S PEACE/ Primary Examiner, Art Unit 2874	

EAST Search History

EAST Search History (Prior Art)

Ref #	Hits	Search Query	DBs	Default Operator	Plurals	Time Stamp
S1	218	G02B6/4455.cpc. and modular	US-PGPUB; USPAT; USOCR; FPRS; EPO; JPO; DERWENT; IBM_TDB	OR	ON	2019/04/23 18:55
S2	44	((("BELDEN") near3 ("CANADA") near3 ("INC"))).AS,AANM.	USPAT	OR	ON	2019/04/23 19:12
S3	15	((("PILON") near3 ("VINCENT"))).INV.	US-PGPUB; USPAT; USOCR; EPO; JPO; DERWENT	OR	ON	2019/04/23 19:13
S4	2814	G02B6/4455.cpc. not S1	US-PGPUB; USPAT; USOCR; FPRS; EPO; JPO; DERWENT; IBM_TDB	OR	ON	2019/04/23 19:55
S5	25	S4 and magnet$4	US-PGPUB; USPAT; USOCR; FPRS; EPO; JPO; DERWENT; IBM_TDB	OR	ON	2019/04/23 19:57
S6	2789	S4 not S5	US-PGPUB; USPAT; USOCR; FPRS; EPO; JPO; DERWENT; IBM_TDB	OR	ON	2019/04/23 20:02
L5	194	("20060018622" | "20080089656" | "20080175552" | "20090245743" | "20100051886" | "20100052346" | "20100054684" | "20100296791" | "20100310225" | "20100316334" | "20100322580" | "20100322581" | "20100322582" | "20100322583" | "20110268405" | "20110268406" | "20110268408" | "20110268410" | "20110268411" | "20110274402" | "20120114295" | "20130011105" | "20130028567" | "20130121657" | "20130148935" | "20130214662" | "20130251319" | "20130251326" | "20130287357" | "20140010511" | "20140079365" | "20160033732" |	US-PGPUB; USPAT; USOCR	OR	ON	2019/04/24 09:32

		"20160062050" | "20160062055" | "20160062058" | "20160062068" | "20160299308" | "2056219" | "2550339" | "3392543" | "3478535" | "4034572" | "4266853" | "4585303" | "4655521" | "4792203" | "4824196" | "4846565" | "4986762" | "5046811" | "5129030" | "5142606" | "5167001" | "5212761" | "5325455" | "5339379" | "5370541" | "5442726" | "5448670" | "5490229" | "5497444" | "5511144" | "5647043" | "5717810" | "5758003" | "5804765" | "5836786" | "5902155" | "5946440" | "5978540" | "6017238" | "6080011" | "6085003" | "6086415" | "6095852" | "6109978" | "6167183" | "6203130" | "6210216" | "6356697" | "6396992" | "6591051" | "6768860" | "6769551" | "6771861" | "6788846" | "6920274" | "6944389" | "6946600" | "6974438" | "7000784" | "7031588" | "7087840" | "7113687" | "7147383" | "7200314" | "7200316" | "7318321" | "7320507" | "7330629" | "7376321" | "7416347" | "7418182" | "7509015" | "7529458" | "7532799" | "7570861" | "7628644" | "7672561" | "7681187" | "7682187" | "7686518").PN. OR ("7689089" | "7722411" | "7729586" | "7744176" | "7756378" | "7756380" | "7760983" | "7826705" | "7854333" | "7856166" | "7876995" | "7887244" | "7889961" | "7903925" | "7945135" | "7945136" | "7962000" | "7974105" | "7979985" | "8014646" | "8038015" | "8038354" | "8061534" | "8075198" | "8075344" | "8121458" | "8135257" | "8154886" | "8179684" | "8184938" | "8203450" | "8254742" | "8280216" | "8285104" | "8290332" | "8290333" | "8297854" | "8301004" | "8326107" | "8331752" | "8403599" | "8411465" | "8418974" | "8433171" | "8437147" | "8437597" | "8452148" | "8452149" | "8472776" | "8520996" | "8538226" | "8559783" | "8565572" | "8625950" | "8625951" | "8705926" | "8712206" | "8746466" | "8867883" | "8879881" | "8934253" | "8938147" | "8953924" | "8965168" | "8992099" | "9008485" | "9020320" | "9075216" | "9075217" | "9116324" | "9140870" | "9170392" | "9213161" | "9213363" | "9279951" | "9690065" | "D628462" | "RE40375").PN. OR ("10215944").URPN.				

EAST Search History (Interference)

<This search history is empty>

4/24/2019 9:39:46 AM
C:\Users\rpeace\Documents\EAST\Workspaces\16143831.wsp

PTO/SB/06 (09-11)
Approved for use through 1/31/2014. OMB 0651-0032
U.S. Patent and Trademark Office; U.S. DEPARTMENT OF COMMERCE
Under the Paperwork Reduction Act of 1995, no persons are required to respond to a collection of information unless it displays a valid OMB control number.

PATENT APPLICATION FEE DETERMINATION RECORD Substitute for Form PTO-875	Application or Docket Number 16/143,831	Filing Date 09/27/2018	☐ To be Mailed

ENTITY: ☑ LARGE ☐ SMALL ☐ MICRO

APPLICATION AS FILED - PART I

FOR	(Column 1) NUMBER FILED	(Column 2) NUMBER EXTRA		RATE ($)	FEE ($)
☐ BASIC FEE (37 CFR 1.16(a), (b), or (c))	N/A	N/A		N/A	
☐ SEARCH FEE (37 CFR 1.16(k), (i), or (m))	N/A	N/A		N/A	
☐ EXAMINATION FEE (37 CFR 1.16(o), (p), or (q))	N/A	N/A		N/A	
TOTAL CLAIMS (37 CFR 1.16(i))	minus 20 =	*		x $100 =	
INDEPENDENT CLAIMS (37 CFR 1.16(h))	minus 3 =	*		x $460 =	
☐ APPLICATION SIZE FEE (37 CFR 1.16(s))	If the specification and drawings exceed 100 sheets of paper, the application size fee due is $310 ($155 for small entity) for each additional 50 sheets or fraction thereof. See 35 U.S.C. 41(a)(1)(G) and 37 CFR 1.16(s).				
☐ MULTIPLE DEPENDENT CLAIM PRESENT (37 CFR 1.16(j))					
* If the difference in column 1 is less than zero, enter "0" in column 2.				TOTAL	

APPLICATION AS AMENDED - PART II

AMENDMENT	07/24/2019	(Column 1) CLAIMS REMAINING AFTER AMENDMENT		(Column 2) HIGHEST NUMBER PREVIOUSLY PAID FOR	(Column 3) PRESENT EXTRA		RATE ($)	ADDITIONAL FEE ($)
	Total (37 CFR 1.16(i))	* 16	Minus	** 20	= 0		x $100 =	0
	Independent (37 CFR 1.16(h))	* 3	Minus	*** 3	= 0		x $460 =	0
	☐ Application Size Fee (37 CFR 1.16(s))							
	☐ FIRST PRESENTATION OF MULTIPLE DEPENDENT CLAIM (37 CFR 1.16(j))							
							TOTAL ADD'L FEE	0

AMENDMENT		(Column 1) CLAIMS REMAINING AFTER AMENDMENT		(Column 2) HIGHEST NUMBER PREVIOUSLY PAID FOR	(Column 3) PRESENT EXTRA		RATE ($)	ADDITIONAL FEE ($)
	Total (37 CFR 1.16(i))	*	Minus	**	=		x $0 =	
	Independent (37 CFR 1.16(h))	*	Minus	***	=		x $0 =	
	☐ Application Size Fee (37 CFR 1.16(s))							
	☐ FIRST PRESENTATION OF MULTIPLE DEPENDENT CLAIM (37 CFR 1.16(j))							
							TOTAL ADD'L FEE	

* If the entry in column 1 is less than the entry in column 2, write "0" in column 3.	LIE
** If the "Highest Number Previously Paid For" IN THIS SPACE is less than 20, enter "20".	/THERESA D DAWKINS/
*** If the "Highest Number Previously Paid For" IN THIS SPACE is less than 3, enter "3".	
The "Highest Number Previously Paid For" (Total or Independent) is the highest number found in the appropriate box in column 1.	

This collection of information is required by 37 CFR 1.16. The information is required to obtain or retain a benefit by the public which is to file (and by the USPTO to process) an application. Confidentiality is governed by 35 U.S.C. 122 and 37 CFR 1.14. This collection is estimated to take 12 minutes to complete, including gathering, preparing, and submitting the completed application form to the USPTO. Time will vary depending upon the individual case. Any comments on the amount of time you require to complete this form and/or suggestions for reducing this burden, should be sent to the Chief Information Officer, U.S. Patent and Trademark Office, U.S. Department of Commerce, P.O. Box 1450, Alexandria, VA 22313-1450. DO NOT SEND FEES OR COMPLETED FORMS TO THIS ADDRESS. **SEND TO: Commissioner for Patents, P.O. Box 1450, Alexandria, VA 22313-1450.**

If you need assistance in completing the form, call 1-800-PTO-9199 and select option 2.

PTO/SB/06 (09-11)
Approved for use through 1/31/2014. OMB 0651-0032
U.S. Patent and Trademark Office; U.S. DEPARTMENT OF COMMERCE
Under the Paperwork Reduction Act of 1995, no persons are required to respond to a collection of information unless it displays a valid OMB control number.

PATENT APPLICATION FEE DETERMINATION RECORD Substitute for Form PTO-875	Application or Docket Number 16/143,831	Filing Date 09/27/2018	☐ To be Mailed

ENTITY: ☑ LARGE ☐ SMALL ☐ MICRO

APPLICATION AS FILED - PART I

FOR	(Column 1) NUMBER FILED	(Column 2) NUMBER EXTRA		RATE ($)	FEE ($)
☐ BASIC FEE (37 CFR 1.16(a), (b), or (c))	N/A	N/A		N/A	
☐ SEARCH FEE (37 CFR 1.16(k), (i), or (m))	N/A	N/A		N/A	
☐ EXAMINATION FEE (37 CFR 1.16(o), (p), or (q))	N/A	N/A		N/A	
TOTAL CLAIMS (37 CFR 1.16(i))	minus 20 =	*		x $100 =	
INDEPENDENT CLAIMS (37 CFR 1.16(h))	minus 3 =	*		x $460 =	
☐ APPLICATION SIZE FEE (37 CFR 1.16(s))	If the specification and drawings exceed 100 sheets of paper, the application size fee due is $310 ($155 for small entity) for each additional 50 sheets or fraction thereof. See 35 U.S.C. 41(a)(1)(G) and 37 CFR 1.16(s).				
☐ MULTIPLE DEPENDENT CLAIM PRESENT (37 CFR 1.16(j))					
* If the difference in column 1 is less than zero, enter "0" in column 2.				TOTAL	

APPLICATION AS AMENDED - PART II

AMENDMENT	07/24/2019	(Column 1) CLAIMS REMAINING AFTER AMENDMENT		(Column 2) HIGHEST NUMBER PREVIOUSLY PAID FOR	(Column 3) PRESENT EXTRA		RATE ($)	ADDITIONAL FEE ($)
	Total (37 CFR 1.16(i))	* 16	Minus	** 20	= 0		x $100 =	0
	Independent (37 CFR 1.16(h))	* 3	Minus	*** 3	= 0		x $460 =	0
	☐ Application Size Fee (37 CFR 1.16(s))							
	☐ FIRST PRESENTATION OF MULTIPLE DEPENDENT CLAIM (37 CFR 1.16(j))							
							TOTAL ADD'L FEE	0

AMENDMENT		(Column 1) CLAIMS REMAINING AFTER AMENDMENT		(Column 2) HIGHEST NUMBER PREVIOUSLY PAID FOR	(Column 3) PRESENT EXTRA		RATE ($)	ADDITIONAL FEE ($)
	Total (37 CFR 1.16(i))	*	Minus	**	=		x $0 =	
	Independent (37 CFR 1.16(h))	*	Minus	***	=		x $0 =	
	☐ Application Size Fee (37 CFR 1.16(s))							
	☐ FIRST PRESENTATION OF MULTIPLE DEPENDENT CLAIM (37 CFR 1.16(j))							
							TOTAL ADD'L FEE	

* If the entry in column 1 is less than the entry in column 2, write "0" in column 3.	LIE
** If the "Highest Number Previously Paid For" IN THIS SPACE is less than 20, enter "20".	/MELINDA L OLIVER/
*** If the "Highest Number Previously Paid For" IN THIS SPACE is less than 3, enter "3".	
The "Highest Number Previously Paid For" (Total or Independent) is the highest number found in the appropriate box in column 1.	

This collection of information is required by 37 CFR 1.16. The information is required to obtain or retain a benefit by the public which is to file (and by the USPTO to process) an application. Confidentiality is governed by 35 U.S.C. 122 and 37 CFR 1.14. This collection is estimated to take 12 minutes to complete, including gathering, preparing, and submitting the completed application form to the USPTO. Time will vary depending upon the individual case. Any comments on the amount of time you require to complete this form and/or suggestions for reducing this burden, should be sent to the Chief Information Officer, U.S. Patent and Trademark Office, U.S. Department of Commerce, P.O. Box 1450, Alexandria, VA 22313-1450. DO NOT SEND FEES OR COMPLETED FORMS TO THIS ADDRESS. **SEND TO: Commissioner for Patents, P.O. Box 1450, Alexandria, VA 22313-1450.**

If you need assistance in completing the form, call 1-800-PTO-9199 and select option 2.

IN THE UNITED STATES PATENT AND TRADEMARK OFFICE

Applicant:	Belden Canada Inc.	Customer Number:	25545
Docket No.:	771/13569.451	Confirmation No.:	4901
Serial No.:	16/143,831	Group Art:	2874
Filing Date:	September 27, 2018	Examiner:	Rhonda S. Peace
Title:	MODULAR FIBER OPTIC CASSETTE, SYSTEM AND METHOD		

Mail Stop Amendment
Commissioner for Patents
P.O. Box 1450
Alexandria, VA 22313-1450

CERTIFICATE OF ELECTRONIC TRANSMISSION
I hereby certify that this correspondence is being electronically filed with the United States Patent and Trademark Office via EFS-Web on the date below:

07/24/2019 /Anna Fovero/
Date [Anna Fovero]

RESPONSE TO OFFICIAL ACTION

Sir:

In response to the Official Action dated April 29, 2019 in connection with the above-identified patent application, please consider the following amendments and remarks. Response to the Office Action is due on July 29, 2019.

Amendments to the Claims are reflected in the listing of claims which begins on page 2 of this paper.

Remarks/Arguments begin on page 6 of this paper.

AMENDMENTS TO THE CLAIMS:

This listing of claims will replace prior versions and listings of claims in the application:

Claims have been amended as follows: Underlines indicate insertions and ~~strikethrough~~ indicate deletions.

Listing of claims:

1. (original) A modular fiber optic cassette system, the system comprising:

a case comprising a top and a bottom wall and two opposed side walls, each of said sidewalls attached between respective side edges of said top and bottom wall, said walls together defining a tray receiving space there between and a forward edge of each said wall together defining an opening to said tray receiving space;

at least one tray slideably received within said tray receiving space for movement between a stored position wherein said tray is completely inside said tray receiving space and an accessible position wherein a front end of said tray is in front of said opening and outside of said tray receiving space;

a set of fiber optic cassettes, a selected plurality of the cassettes arrangeable side by side along said tray front end wherein each of said cassettes comprises a plurality of optic plug receiving receptacles arranged side by side in a row along a front thereof, a first of said set of cassettes comprising a first cassette width of one of one, two, three, four and six standard width units and a second of said cassettes comprising a second cassette width different from said first cassette width and one of one, two, three, four and six standard width units; and

a fastener for removeably securing each of said cassettes to said tray.

2. (original) The modular fiber optic cassette system of Claim 1, wherein said tray has a width dimensioned to receive at least twelve standard width units side by side.

3. (original) The modular fiber optic cassette system of Claim 1, wherein each of said cassettes comprises a multi fiber connector receiving receptacle arranged on a rear thereof and a plurality of optic fibers, one of said optic fibers interconnecting a respective one of said optic plug receiving receptacles with said multi fiber connector receiving receptacle.

4. (original) The modular fiber optic cassette system of Claim 1, wherein each of said cassettes comprises four fiber optic plug receiving receptacles arranged side by side in a row along a front thereof for each standard width unit.

5. (original) The modular fiber optic cassette system of Claim 1, wherein said system is for mounting in a rack and further comprising a pair of mounting brackets, one of said brackets attached to each of said sidewalls on either side of an outside of said case, said mounting brackets for securing said case to the rack.

6. (original) The modular fiber optic cassette system of Claim 1, wherein said tray comprises a plurality from a ferrous metal and said fastener comprises a magnet.

7. (original) The modular fiber optic cassette system of Claim 1, wherein said tray is manufactured from a ferrous metal and said fastener comprises a magnet.

8. (original) The modular fiber optic cassette system of Claim 1, further comprising at least one elongate cable management bracket comprising a cable management loop and a fastener for removeably securing said at least one bracket to said tray, said bracket having a bracket width of one of said standard width units and further

wherein when installed on said tray adjacent an installed one of said cassettes, said cable management loop is positioned in front of and to a side of said plurality of optic plug receiving receptacles of said installed cassette.

9. (original) A method for organising a tray comprising a front edge in a fiber optic interconnect system, the method comprising:

defining a standard width unit wherein a width of the front edge is substantially evenly divisible by said standard width unit;

selecting a plurality of cassettes for installation on the tray from a set of cassettes having a plurality of different widths, wherein each of said different widths is evenly divisible by said standard width unit; and

releasably securing said selected cassettes along the front edge of the tray.

10. (original) The method for organising a tray of Claim 9, wherein said set of cassettes comprises cassettes comprising widths of one, two, three, four and six standard width units.

11. (original) The method for organising a tray of Claim 9, wherein said selected cassettes all comprise the same width.

12. (original) The method for organising a tray of Claim 9, wherein said selected cassettes comprise a first cassette having a first width and a second cassette having a second width different from said first width.

13. (original) The method for organising a tray of Claim 9, wherein the width of the front edge is substantially evenly divisible by a maximum of twelve (12) of said standard width units.

14. (original) The method for organising a tray of Claim 12, wherein said selected cassettes further comprise a third cassette comprising a third width different from said first width and said second width.

15. (original) A modular fiber optic cassette for releasably securing to a tray fabricated from a ferrous metal, comprising:

an elongate rectangular optic fiber receiving housing;

a plurality of optic plug receiving receptacles arranged in a row along a front of said housing;

a multi fiber connector receiving receptacle on a rear thereof;

a plurality of optic fibers interconnecting a respective one of said optic plug receiving receptacles with said multi fiber connector receiving receptacle; and

a magnet secured to an underside of said housing.

16. (currently amended) The modular fiber optic cassette of Claim ~~14~~15, wherein the tray has a tray width substantially evenly divisible by a plurality of standard width units, wherein a plurality of the modular cassettes are arrangeable side by side along a front end of the tray and further wherein said cassette comprise a cassette width of one of one, two, three, four and six standard width units.

REMARKS

Claims 1 to 16 remain in the case. Claim 16 has been amended having regard to the official action. Reconsideration in view of the following remarks and entry of the foregoing amendments is respectfully requested.

REJECTIONS UNDER 35 U.S.C. § 112(b)

Claim 16 has been rejected under 35 U.S.C. § 112 as being indefinite. Applicant submits that Claim 16 as amended overcomes this rejection.

REJECTION UNDER 35 U.S.C. § 102(a)

Claims 1-5 and 9-14 have been rejected as being anticipated by Sedor et al. ("US 10,215,944").

Applicant respectfully traverse the rejection as follows. Claim 1 claims a modular fiber optic cassette system comprising *inter alia* a set of fiber optic cassettes …, a first of said set of cassettes comprising a first cassette width of one of one, two, three, four and six standard width units and a second of said cassettes comprising a second cassette width different from said first cassette width and one of one, two, three, four and six standard width units.

Sedor et al. discloses modular trays comprising different sized fiber optic module. Like removeable rails are provided which may be removeably secured to a tray body in one of a number of positions so as to accommodate the different sizes of modules. Applicant notes that the rails are mounted such that they are in between adjacent ones of

the modules. Clearly, therefore, the presence of one or more rails between modules affects the dimensions of the modules. For example, referring to Figures 8, 9 11 configurations of respectively two (2), three (3) and one (1) modules are shown comprising respectively one (1), two (2) and zero (0) intermediate rails. Of note is that each of these configurations occupies the same overall width. As each rail is of a pre-determined width W_R, and given that the modules of the configuration of Figure 8 have a width W_2, the modules of Figure 9 has a width W_3 and the module of Figure 11 has a width W_1, it follows that for the configurations of Sedor et al.:

$$2*W_2 + W_R = 3*W_3 + 2*W_R = W_1$$

Clearly, therefore, due to the presence of a varying number of rails the module widths W_2, W_3 and W_1 have no common standard module width. In particular, neither W_2 or W_1 are divisible by W_3. The same applies if the standard width unit is taken as $W_3/2$ as proposed by the Examiner. That is, in each case the presence of the removeable rails effects the overall width of the assembly such that the module widths are not related to a common standard module width. This is also clearly reflected in the different spacing of the receptacles arranged along the front of the modules 20, 30 and 40.

In any case, nowhere does Sedor et al. discuss modules having a width related to a common standard module width.

As such, it cannot be said that Sedor et al. discloses a first set of cassettes comprising a first cassette width of one of one, two, three, four and six standard width units and a second of said cassettes comprising a second cassette width different from the first cassette width and one of one, two, three, four and six standard width units as claimed at Claim 1. As such, Applicant submits that Sedor et al. does not anticipate Claim 1 of the present application. A similar argument applies to Claim 9 which Applicant submits is also not anticipated by Sedro et al.

REJECTION UNDER 35 U.S.C. § 103

Claims 6, 7, 15 and 16 have been rejected as being unpatentable over Sedor et al. and Nelson et al. ("US 4,792,203"). Applicant respectfully disagrees.

Claim 15 claims a modular fiber optic cassette comprising *inter alia* an elongate rectangular optic fiber receiving housing and a magnet secured to an underside of the housing.

Nelsen et al. discloses an optical fibre distribution apparatus comprising a housing and a plurality of trays swingable from a storage position inside the housing to an access position in front of the housing. The trays are held in the storage position by an assembly comprising a magnetized sheet 62 which is fastened to the sidewall 28 of the housing 22 via brackets 60. It is stated in Nelsen et al. at column 5, lines 35-37, "…[s]heet 62 is applicable for metallic trays 24." Applicant assumes that the Examiner has read that the "trays" of Nelsen et al. are equivalent to the modules of Sedor et al. Clearly, therefore, the magnet of Nelsen et al. forms part of the housing and is used to hold a metallic tray, or module, in a stored position.

Nelsen et al. fails to teach a fiber optic module comprising an elongate rectangular optic fiber receiving housing and a magnet secured to an underside of the housing as claimed at Claim 15. Rather, as discussed above, Nelsen et al. discloses retaining trays in a storage position by a magnet attached to the sidewall of an optical fibre distribution apparatus.

In view of the above Applicant submits that both Sedor et al. and Nelsen et al. fail to disclose the fiber optic module as claimed at Claim 15 and therefore, taken either alone or in combination, Sedor et al. and Nelsen et al. fail to render Claim 15 obvious.

Applicant submits, therefore, that Claim 15 is an allowable claim. A similar argument applies to Claim 6 which Applicant submits is also allowable.

Claim 8 has been rejected as being unpatentable over Sedor et al. and Giraud et al. ("US 2016/0062050"). Giraud et al. adds nothing to address the limitations of Sedor et al. as discussed above having regard to Claim 1, and therefore Applicant submits that Claim 8 is not rendered obvious by Sedor et al. and Giraud et al. taken either alone or in combination and therefore that claim 8 is an allowable claim.

As the remaining claims all depend from an allowable claim, Applicant submits that they, too, are allowable claims.

The rejections of the original claims are believed to have been overcome by the present remarks and the introduction of new claims. From the foregoing, further and favorable action in the form of a Notice of Allowance is believed to be next in order, and such an action is earnestly solicited.

Respectfully submitted,

Date: July 24, 2019

/Hugh Mansfield/
Hugh Mansfield
Registration No.: 55757
Agent of Applicant

LAVERY, DE BILLY LLP
1 Place Ville Marie, Suite 4000
Montreal, Quebec, Canada H3B 4M4
Email: hmansfield@lavery.ca
Tel.: (514) 397-5170
Fax: (514) 397-4382

Electronic Acknowledgement Receipt	
EFS ID:	36672991
Application Number:	16143831
International Application Number:	
Confirmation Number:	4901
Title of Invention:	MODULAR FIBER OPTIC CASSETTE, SYSTEM AND METHOD
First Named Inventor/Applicant Name:	VINCENT PILON
Customer Number:	25545
Filer:	Gwendoline Bruneau/Anna Fovero
Filer Authorized By:	Gwendoline Bruneau
Attorney Docket Number:	771/13569.451
Receipt Date:	24-JUL-2019
Filing Date:	27-SEP-2018
Time Stamp:	10:49:17
Application Type:	Utility under 35 USC 111(a)

Payment information:

Submitted with Payment	no

File Listing:

Document Number	Document Description	File Name	File Size(Bytes)/ Message Digest	Multi Part /.zip	Pages (if appl.)
1		2501-USPTO-AMENDMENT-Response_to_OA_dated_190429.pdf	52507 8e2cfbfd48e78f9ba8bbdd7325958d78c4dd514b	yes	9

	Multipart Description/PDF files in .zip description		
	Document Description	**Start**	**End**
	Amendment/Req. Reconsideration-After Non-Final Reject	1	1
	Claims	2	5
	Applicant Arguments/Remarks Made in an Amendment	6	9
Warnings:			
Information:			
	Total Files Size (in bytes):	52507	

This Acknowledgement Receipt evidences receipt on the noted date by the USPTO of the indicated documents, characterized by the applicant, and including page counts, where applicable. It serves as evidence of receipt similar to a Post Card, as described in MPEP 503.

<u>New Applications Under 35 U.S.C. 111</u>
If a new application is being filed and the application includes the necessary components for a filing date (see 37 CFR 1.53(b)-(d) and MPEP 506), a Filing Receipt (37 CFR 1.54) will be issued in due course and the date shown on this Acknowledgement Receipt will establish the filing date of the application.
<u>National Stage of an International Application under 35 U.S.C. 371</u>
If a timely submission to enter the national stage of an international application is compliant with the conditions of 35 U.S.C. 371 and other applicable requirements a Form PCT/DO/EO/903 indicating acceptance of the application as a national stage submission under 35 U.S.C. 371 will be issued in addition to the Filing Receipt, in due course.
<u>New International Application Filed with the USPTO as a Receiving Office</u>
If a new international application is being filed and the international application includes the necessary components for an international filing date (see PCT Article 11 and MPEP 1810), a Notification of the International Application Number and of the International Filing Date (Form PCT/RO/105) will be issued in due course, subject to prescriptions concerning national security, and the date shown on this Acknowledgement Receipt will establish the international filing date of the application.

UNITED STATES PATENT AND TRADEMARK OFFICE

UNITED STATES DEPARTMENT OF COMMERCE
United States Patent and Trademark Office
Address: COMMISSIONER FOR PATENTS
P.O. Box 1450
Alexandria, Virginia 22313-1450
www.uspto.gov

APPLICATION NO.	FILING DATE	FIRST NAMED INVENTOR	ATTORNEY DOCKET NO.	CONFIRMATION NO.
16/143,831	09/27/2018	VINCENT PILON	771/13569.451	4901

25545 7590 08/12/2019
Lavery, De Billy, LLP
1 Place Ville Marie, Suite 4000
Montreal, QUEBEC H3B 4M4
CANADA

EXAMINER
PEACE, RHONDA S

ART UNIT	PAPER NUMBER
2874	

NOTIFICATION DATE	DELIVERY MODE
08/12/2019	ELECTRONIC

Please find below and/or attached an Office communication concerning this application or proceeding.

The time period for reply, if any, is set in the attached communication.

Notice of the Office communication was sent electronically on above-indicated "Notification Date" to the following e-mail address(es):

afovero@lavery.ca

PTOL-90A (Rev. 04/07)

Office Action Summary	Application No. 16/143,831	Applicant(s) PILON, VINCENT	
	Examiner R. PEACE	Art Unit 2874	AIA (FITF) Status Yes

-- The MAILING DATE of this communication appears on the cover sheet with the correspondence address --

Period for Reply

A SHORTENED STATUTORY PERIOD FOR REPLY IS SET TO EXPIRE 3 MONTHS FROM THE MAILING DATE OF THIS COMMUNICATION.

- Extensions of time may be available under the provisions of 37 CFR 1.136(a). In no event, however, may a reply be timely filed after SIX (6) MONTHS from the mailing date of this communication.
- If NO period for reply is specified above, the maximum statutory period will apply and will expire SIX (6) MONTHS from the mailing date of this communication.
- Failure to reply within the set or extended period for reply will, by statute, cause the application to become ABANDONED (35 U.S.C. § 133). Any reply received by the Office later than three months after the mailing date of this communication, even if timely filed, may reduce any earned patent term adjustment. See 37 CFR 1.704(b).

Status

1)☑ Responsive to communication(s) filed on 7/24/19.

☐ A declaration(s)/affidavit(s) under **37 CFR 1.130(b)** was/were filed on _____.

2a)☑ This action is **FINAL.** 2b) ☐ This action is non-final.

3)☐ An election was made by the applicant in response to a restriction requirement set forth during the interview on _____; the restriction requirement and election have been incorporated into this action.

4)☐ Since this application is in condition for allowance except for formal matters, prosecution as to the merits is closed in accordance with the practice under *Ex parte Quayle*, 1935 C.D. 11, 453 O.G. 213.

Disposition of Claims*

5) ☑ Claim(s) 1-16 is/are pending in the application.

5a) Of the above claim(s) _____ is/are withdrawn from consideration.

6) ☐ Claim(s) _____ is/are allowed.

7) ☑ Claim(s) 1-16 is/are rejected.

8) ☐ Claim(s) _____ is/are objected to.

9) ☐ Claim(s) _____ are subject to restriction and/or election requirement

* If any claims have been determined allowable, you may be eligible to benefit from the **Patent Prosecution Highway** program at a participating intellectual property office for the corresponding application. For more information, please see http://www.uspto.gov/patents/init_events/pph/index.jsp or send an inquiry to **PPHfeedback@uspto.gov.**

Application Papers

10)☐ The specification is objected to by the Examiner.

11)☑ The drawing(s) filed on 9/27/18 is/are: a)☑ accepted or b)☐ objected to by the Examiner.

Applicant may not request that any objection to the drawing(s) be held in abeyance. See 37 CFR 1.85(a).

Replacement drawing sheet(s) including the correction is required if the drawing(s) is objected to. See 37 CFR 1.121(d).

Priority under 35 U.S.C. § 119

12)☐ Acknowledgment is made of a claim for foreign priority under 35 U.S.C. § 119(a)-(d) or (f).

Certified copies:

a)☐ All b)☐ Some** c)☐ None of the:

1.☐ Certified copies of the priority documents have been received.

2.☐ Certified copies of the priority documents have been received in Application No. _____.

3.☐ Copies of the certified copies of the priority documents have been received in this National Stage application from the International Bureau (PCT Rule 17.2(a)).

** See the attached detailed Office action for a list of the certified copies not received.

Attachment(s)

1) ☐ Notice of References Cited (PTO-892)

2) ☐ Information Disclosure Statement(s) (PTO/SB/08a and/or PTO/SB/08b) Paper No(s)/Mail Date _____.

3) ☐ Interview Summary (PTO-413) Paper No(s)/Mail Date _____.

4) ☐ Other: _____.

DETAILED ACTION

Notice of Pre-AIA or AIA Status

The present application, filed on or after March 16, 2013, is being examined under the first inventor to file provisions of the AIA.

Response to Arguments

Applicant's arguments, see page 6, filed 7/24/19, with respect to the rejection of claim 16 under 35 U.S.C. 112, have been fully considered and are persuasive. The rejection of claim 16 under 35 U.S.C. 112 has been withdrawn.

Applicant's arguments, see page 6-7, filed 7/24/19, with respect to the rejection of claims 1-5 and 9-14 under 35 U.S.C. 102(a)(2) as anticipated by Sedor et al (US 10,215,944), have been fully considered but they are not persuasive.

Applicant argues Sedor et al fails to disclose or reasonably suggest a set of fiber optic cassettes, the first of said set of cassettes comprising a first cassette width of one of one, two, three, four and six standard width units and a second of said cassettes comprising a second cassette width different from said first cassette width and one of one, two, three, four and six standard width units. The Examiner respectfully disagrees.

Applicant defines a standardized width as accommodating a single receptacle module comprising four receptacles. See [0016] of the specification filed 9/27/18. In Sedor et al, the first cassette 40 has a width of two standard width units, since cassette 40 comprises two single receptacle modules, each module comprising four receptacles, for a total of eight receptacles per cassette 40 (Figs 9-10). Also in Sedor et al, the second of said cassettes 30 has a width of three standard width units, since the cassette 30 comprises three single receptacle modules, each module comprising four

receptacles, for a total of twelve receptacles per cassette 30 (Figs 7-10). See also col. 4 lines 19-35 and col. 5 lines 39-47. That is, Sedor et al anticipates the first cassette width and second cassette width as recited in the claim and shows first cassette widths and second cassette widths having standard widths as defined by the current specification. For these reasons, Applicant's arguments are unpersuasive, and the rejection is maintained.

Applicant's arguments, see page 8-9, filed 7/24/19, with respect to the rejection of claims 6, 7, 15 and 16 under 35 U.S.C. 103 as unpatentable over Sedor et al (US 10,215,944) and Nelson et al (US 4,792,203), have been fully considered but they are not persuasive.

Applicant argues Nelson et al fails to disclose a modular fiber optic cassette comprising an elongate rectangular optic fiber receiving housing and a magnet secured to an underside of the housing, and therefore the rejection is improper. The Examiner agrees Nelson et al fails to disclose an elongate rectangular housing, but respectfully disagrees Applicant's analysis regarding the rejection of the claims.

That is, while Nelson et al does not disclose an elongate rectangular housing, the same is disclosed by Sedor et al. As previously discussed in the Office Action mailed 4/29/19, Sedor et al discloses modular fiber optic cassette 30/40 for releasably securing to a tray 120, comprising an elongate rectangular optic fiber receiving housing (Figs 7-10; col. 4 lines 19-35).

Applicant's arguments are unpersuasive and the prior art rejections are maintained.

Claim Rejections - 35 USC § 102

In the event the determination of the status of the application as subject to AIA 35 U.S.C. 102 and 103 (or as subject to pre-AIA 35 U.S.C. 102 and 103) is incorrect, any correction of the statutory basis for the rejection will not be considered a new ground of rejection if the prior art relied upon, and the rationale supporting the rejection, would be the same under either status.

The following is a quotation of the appropriate paragraphs of 35 U.S.C. 102 that form the basis for the rejections under this section made in this Office action:

> A person shall be entitled to a patent unless –
>
> (a)(2) the claimed invention was described in a patent issued under section 151, or in an application for patent published or deemed published under section 122(b), in which the patent or application, as the case may be, names another inventor and was effectively filed before the effective filing date of the claimed invention.

Claim(s) 1-5 and 9-14 is/are rejected under 35 U.S.C. 102(a)(2) as being anticipated by Sedor et al (US 10,215,944 B2).

Re. Claim 1, Sedor et al discloses a modular fiber optic cassette system 50 (Fig 1A; col. 4 lines 14-16), the system comprising:

a case 100 comprising a top wall 102 and a bottom wall 112 and two opposed side walls 104/106, each of said sidewalls 104/106 attached between respective side edges of said top and bottom wall 102/112, said walls together defining a tray receiving space there between and a forward edge of each said wall together defining an opening to said tray receiving space (Figs 1A and 2A-2C; col. 4 lines 36-51);

at least one tray 120 slideably received within said tray receiving space for movement between a stored position wherein said tray 120 is completely inside said

tray receiving space and an accessible position wherein a front end of said tray 120 is in front of said opening and outside of said tray receiving space (Figs 1A, 1B, and 5; col. 4 lines 62-67; col. 5 lines 1-22);

a set of fiber optic cassettes 30/40, a selected plurality of the cassettes arrangeable side by side along said tray front end wherein each of said cassettes comprises a plurality of optic plug receiving receptacles arranged side by side in a row along a front thereof, a first 40 of said set of cassettes 30/40 comprising a first cassette width of one of one, two, three, four and six standard width units (i.e. first cassette 40 has a width of two standard width units; Figs 9-10) and a second of said cassettes 30 comprising a second cassette width different from said first cassette width and one of one, two, three, four and six standard width units (i.e. second cassette 30 of Figs 7-8 has a width of three standard width units) (Figs 7-10; col. 4 lines 19-35; col. 5 lines 39-47); and

a fastener 180 for removeably securing each of said cassettes 30/40 to said tray 120 (Figs 6B and 7-10; col. 5 lines 23-47).

It is of note, for purposes of Sedor et al, one standardized width unit accommodates four receptacles, as in the current invention.

Re. Claim 2, Sedor et al discloses said tray 120 has a width dimensioned to receive at least twelve standard width units side by side (Figs 7-10; col. 5 lines 35-51).

Re. Claim 3, Sedor et al discloses each of said cassettes 30/40 comprises a multi-fiber connector receiving receptacle arranged on a rear thereof and a plurality of optic fibers, one of said optic fibers interconnecting a respective one of said optic plug

receiving receptacles with said multi fiber connector receiving receptacle (Figs 7-10; col. 4 lines 23-31).

Re. Claim 4, Sedor et al discloses each of said cassettes 30/40 comprises four fiber optic plug receiving receptacles arranged side by side in a row along a front thereof for each standard width unit (Figs 7-10; col. 4 lines 19-35; col. 5 lines 39-47).

Re. Claim 5, Sedor et al discloses said system 50 is for mounting in a rack 2/4 and further comprising a pair of mounting brackets 108, one of said brackets 108 attached to each of said sidewalls 104/106 on either side of an outside of said case 100, said mounting brackets 108 for securing said case 100 to the rack 2/4 (Fig 1A; col. 4 lines 51-54).

Re. Claim 9, Sedor et al discloses a method for organizing a tray comprising a front edge in a fiber optic interconnect system, the method comprising:

defining a standard width unit wherein a width of the front edge is substantially evenly divisible by said standard width unit (col. 1 lines 24-32);

selecting a plurality of cassettes for installation on the tray from a set of cassettes 30/40 having a plurality of different widths (i.e. cassette 40 of Figs 9-10 has a width of two standard width units; second cassette 30 of Figs 7-8 has a width of three standard width units), wherein each of said different widths is evenly divisible by said standard width unit (Figs 7-10; col. 4 lines 19-35; col. 5 lines 39-47); and

releasably securing said selected cassettes along the front edge of the tray 120 (Figs 6B and 7-10; col. 5 lines 23-47).

Re. Claim 10, Sedor et al discloses said set of cassettes 30/40 comprises cassettes comprising widths of one, two, three, four and six standard width units (i.e.

cassette 40 of Figs 9-10 has a width of two standard width units; second cassette 30 of Figs 7-8 has a width of three standard width units) (Figs 7-10; col. 4 lines 19-35; col. 5 lines 39-47).

Re. Claim 11, Sedor et al discloses said selected cassettes all comprise the same width, for example Figures 7 and 8 show the tray filled with cassettes 30 while Figures 9-10 show the tray filled with cassettes 40.

Re. Claim 12, Sedor et al discloses said selected cassettes comprise a first cassette having a first width and a second cassette having a second width different from said first width, for example when a tray 120 is rearranged to accommodate cassettes having a different size from those previously installed on the tray (col. 5 lines 35-47).

Re. Claim 13, Sedor et al discloses the width of the front edge is substantially evenly divisible by a maximum of twelve (12) of said standard width units (Figs 7-10; col. 5 lines 35-51).

Re. Claim 14, Sedor et al discloses said selected cassettes further comprise a third cassette 20 comprising a third width different from said first width and said second width (Figs 11-12; col. 4 lines 19-31; col. 5 lines 48-51).

Claim Rejections - 35 USC § 103

In the event the determination of the status of the application as subject to AIA 35 U.S.C. 102 and 103 (or as subject to pre-AIA 35 U.S.C. 102 and 103) is incorrect, any correction of the statutory basis for the rejection will not be considered a new ground of rejection if the prior art relied upon, and the rationale supporting the rejection, would be the same under either status.

The following is a quotation of 35 U.S.C. 103 which forms the basis for all obviousness rejections set forth in this Office action:

> A patent for a claimed invention may not be obtained, notwithstanding that the claimed invention is not identically disclosed as set forth in section 102, if the differences between the claimed invention and the prior art are such that the claimed invention as a whole would have been obvious before the effective filing date of the claimed invention to a person having ordinary skill in the art to which the claimed invention pertains. Patentability shall not be negated by the manner in which the invention was made.

The factual inquiries set forth in *Graham v. John Deere Co.*, 383 U.S. 1, 148 USPQ 459 (1966), that are applied for establishing a background for determining obviousness under 35 U.S.C. 103 are summarized as follows:

1. Determining the scope and contents of the prior art.

2. Ascertaining the differences between the prior art and the claims at issue.

3. Resolving the level of ordinary skill in the pertinent art.

4. Considering objective evidence present in the application indicating obviousness or nonobviousness.

Claims 6, 7, 15, and 16 is/are rejected under 35 U.S.C. 103 as being unpatentable over Sedor et al (US 10,215,944 B2) and Nelson et al (US 4,792,203).

Re. Claims 6, 7, and 15, Sedor et al discloses the modular fiber optic cassette system as discussed above. Additionally, Sedor et al discloses a modular fiber optic cassette 30/40 for releasably securing to a tray 120, comprising:

an elongate rectangular optic fiber receiving housing (Figs 7-10; col. 4 lines 19-35);

a plurality of optic plug receiving receptacles arranged in a row along a front of said housing (Figs 7-10; col. 4 lines 23-26);

a multi fiber connector receiving receptacle on a rear thereof (Figs 7-10; col. 4 lines 23-26);

a plurality of optic fibers interconnecting a respective one of said optic plug receiving receptacles with said multi fiber connector receiving receptacle (col. 1 lines 21-23; col. 4 lines 23-26); and

a fastener 180 secured to an underside of said housing (i.e. an outer bottom edge of the housing slides and is retained on a portion of the fastener 180 (Figs 6B and 26A-26B; col. 7 lines 1-29).

In Sedor et al, the fastener 180 is a rail that is removeably coupled to the tray 120, specifically protrusions on the rail mate with holes on the tray (Figs 5, 6B, 7-10, and 13A-13C; col. 5 lines 23-67; col. 6 lines 1-4). Sedor et al does not disclose alternative coupling means, such as magnetic coupling, between the fastener 180 and the tray 120. That is to say, Sedor et al does not disclose the tray being fabricated from a *ferrous metal* and the fastener comprising a *magnet*.

The use of a magnetic coupling arrangement for attaching a magnetic rail to a metallic tray surface is well known in the optical arts, as seen by Nelson et al. Nelson et al discloses a magnetic rail 60/62 for coupling to a ferrous metal tray 24 (Fig 6; col. 5 lines 24-35).

It would have been obvious to one of ordinary skill in the art to utilize a metal tray and a fastener comprising a magnet in the system of Sedor et al, since the same is a well-known arrangement of the art as evidences by Nelson et al, and is capable of achieving the attachment/detachment/reattachment nature of the fastener as desired by Sedor et al.

The claim would have been obvious because the substitution of one known element for another (i.e. the substitution of magnetized fastening means for protrusion/aperture fastener means) would have yielded predictable results to one of ordinary skill in the art at the time of the invention. *KSR International Co. v. Teleflex Inc.*, 550 USPQ2d 1385 (2007).

Re. Claim 16, Sedor et al and Nelson et al render obvious the modular fiber optic cassette for the reasons discussed above. As discussed in the previous section, Sedor et al discloses the tray has a tray width substantially evenly divisible by a plurality of standard width units (col. 1 lines 24-32), wherein a plurality of the modular cassettes are arrangeable side by side along a front end of the tray (Figs 7-10) and further wherein said cassette comprise a cassette width of one of one, two, three, four and six standard width units (i.e. cassette 40 of Figs 9-10 has a width of two standard width units; second cassette 30 of Figs 7-8 has a width of three standard width units) (Figs 7-10; col. 4 lines 19-35; col. 5 lines 39-47).

Claim 8 is/are rejected under 35 U.S.C. 103 as being unpatentable over Sedor et al (US 10,215,944 B2) and Giraud et al (US 2016/0062050 A1).

Re. Claim 8, Sedor et al discloses the modular fiber optic cassette system of as discussed above.

However, Sedor et al does not disclose the system as further comprising *at least one elongate cable management bracket comprising a cable management loop and a fastener for removeably securing said at least one bracket to said tray, said bracket having a bracket width of one of said standard width units and further wherein when*

installed on said tray adjacent an installed one of said cassettes, said cable management loop is positioned in front of and to a side of said plurality of optic plug receiving receptacles of said installed cassette.

Giraud et al discloses a modular fiber optic cassette system comprising a case 300 (Fig 3A; [0060]) for retaining at least one slideable tray 100 (Figs 2A and 2B; [0056]-[0057]), the tray 100 comprising a plurality of cassettes 10 (Figs 1A, 2A-2B, and [0053]) and at least one elongate cable management bracket 400 (Figs 6-7; [0066]) attached thereto, the cable management bracket 400 comprising a cable loop and a fastener 422 for removeably securing said at least one bracket 400 to said tray 100 (Figs 6-7; [0067]), said bracket 400 having a bracket width of one of said standard width units ([0066]) and further wherein when installed on said tray adjacent an installed one of said cassettes, said cable loop is positioned in front of and to a side of said plurality of optic plug receiving receptacles of said installed cassette (Fig 7).

It would have been obvious to one of ordinary skill at the time the invention was effectively filed to include the cable management bracket of Giraud et al in the system of Sedor et al, since Giraud et al discloses the cable management bracket provides the network operator flexibility in the optical network to make moves, adds, and changes to transmission protocol as desired while maintaining a neat and orderly cable deployment and routing for the data center (Giraud et al: [0065]).

While Giraud et al discloses a cable loop is formed at the forward end of the bracket 400 (i.e. cable looped from adapter 418 through cut-out 411; Fig 6-7; [0066]-[0067]), Giraud et al fails to disclose *a cable management loop* to support said cable loop.

The use of management loops to support a looped length of optical cable is well known in the art, and commonly used to impact structural stability of the cable loop, thereby minimizing damage to the cable. The claimed cable management loop would have been obvious to one of ordinary skill for the purpose of minimizing damage to the optical cable of Giraud et al. "A person of ordinary skill is also a person of ordinary creativity, not an automaton" – '[w]hen there is a design need or market pressure to solve a problem and there are a finite number of identified, predictable solutions, a person of ordinary skill has good reason to pursue the known options within his or her technical grasp. If this leads to the anticipated success, it is likely the product not of innovation but of ordinary skill and common sense." *KSR International Co. v. Teleflex Inc.*, 550 USPQ2d 1385 (2007).

Conclusion

THIS ACTION IS MADE FINAL. Applicant is reminded of the extension of time policy as set forth in 37 CFR 1.136(a).

A shortened statutory period for reply to this final action is set to expire THREE MONTHS from the mailing date of this action. In the event a first reply is filed within TWO MONTHS of the mailing date of this final action and the advisory action is not mailed until after the end of the THREE-MONTH shortened statutory period, then the shortened statutory period will expire on the date the advisory action is mailed, and any extension fee pursuant to 37 CFR 1.136(a) will be calculated from the mailing date of the advisory action. In no event, however, will the statutory period for reply expire later than SIX MONTHS from the mailing date of this final action.

Any inquiry concerning this communication or earlier communications from the examiner should be directed to R. PEACE whose telephone number is (571)272-8580. The examiner can normally be reached on 9-5 pm.

Examiner interviews are available via telephone, in-person, and video conferencing using a USPTO supplied web-based collaboration tool. To schedule an interview, applicant is encouraged to use the USPTO Automated Interview Request (AIR) at http://www.uspto.gov/interviewpractice.

If attempts to reach the examiner by telephone are unsuccessful, the examiner's supervisor, Uyen-Chau Le can be reached on (571) 272-2397. The fax phone number for the organization where this application or proceeding is assigned is 571-273-8300.

Information regarding the status of an application may be obtained from the Patent Application Information Retrieval (PAIR) system. Status information for published applications may be obtained from either Private PAIR or Public PAIR. Status information for unpublished applications is available through Private PAIR only. For more information about the PAIR system, see http://pair-direct.uspto.gov. Should you have questions on access to the Private PAIR system, contact the Electronic Business Center (EBC) at 866-217-9197 (toll-free). If you would like assistance from a USPTO Customer Service Representative or access to the automated information system, call 800-786-9199 (IN USA OR CANADA) or 571-272-1000.

/RHONDA S PEACE/
Primary Examiner, Art Unit 2874
8/7/19

Search Notes	Application/Control No.	Applicant(s)/Patent Under Reexamination
	16/143,831	PILON, VINCENT
	Examiner	**Art Unit**
	R. PEACE	2874

CPC - Searched*		
Symbol	**Date**	**Examiner**
G02B 6/4455	04/23/2019	RSP

CPC Combination Sets - Searched*		
Symbol	**Date**	**Examiner**

US Classification - Searched*			
Class	**Subclass**	**Date**	**Examiner**

* See search history printout included with this form or the SEARCH NOTES box below to determine the scope of the search.

Search Notes		
Search Notes	**Date**	**Examiner**
global dossier search	04/23/2019	RSP
inventor and assignee searches	04/23/2019	RSP
see attached EAST search history report	04/24/2019	RSP
see attached EAST search history report	08/07/2019	RSP

Interference Search			
US Class/CPC Symbol	**US Subclass/CPC Group**	**Date**	**Examiner**

/RHONDA S PEACE/ Primary Examiner, Art Unit 2874	

EAST Search History

EAST Search History (Prior Art)

Ref #	Hits	Search Query	DBs	Default Operator	Plurals	Time Stamp
L3	18	(US-20160062050-$ or US-20160062055-$ or US-20160062058-$ or US-20160062068-$ or US-20170192191-$ or US-20180003912-$ or US-20180100976-$ or US-20190004268-$ or US-20190101717-$ or US-20090290842-$ or US-20160033732-$).did. or (US-10215944-$ or US-10254497-$ or US-9841574-$ or US-4792203-$ or US-8554044-$ or US-4840449-$).did. or (EP-3404461-$).did.	US-PGPUB; USPAT; FPRS	OR	ON	2019/08/07 14:05
L2	17	G02B6/$.cpc. and ((standard adj width) same (module or cassette))	US-PGPUB; USPAT; USOCR; FPRS; EPO; JPO; DERWENT; IBM_TDB	OR	ON	2019/08/07 13:36
S9	12	G02B6/44$.cpc. and (magnet$4 near5 tray)	US-PGPUB; USPAT; USOCR; FPRS; EPO; JPO; DERWENT; IBM_TDB	OR	ON	2019/04/24 11:18
S8	4	G02B6/44$.cpc. and (magnet$4 near5 rail)	US-PGPUB; USPAT; USOCR; FPRS; EPO; JPO; DERWENT; IBM_TDB	OR	ON	2019/04/24 11:17
S7	194	("20060018622" | "20080089656" | "20080175552" | "20090245743" | "20100051886" | "20100052346" | "20100054684" | "20100296791" | "20100310225" | "20100316334" | "20100322580" | "20100322581" | "20100322582" | "20100322583" | "20110268405" | "20110268406" | "20110268408" | "20110268410" | "20110268411" | "20110274402" | "20120114295" | "20130011105" | "20130028567" | "20130121657" | "20130148935" | "20130214662" | "20130251319" | "20130251326" | "20130287357" | "20140010511" | "20140079365" | "20160033732" | "20160062050" | "20160062055" | "20160062058" | "20160062068" | "20160299308" | "2056219" | "2550339" | "3392543" | "3478535" | "4034572" | "4266853" | "4585303" | "4655521" |	US-PGPUB; USPAT; USOCR	OR	ON	2019/04/24 09:32

		"4792203" | "4824196" | "4846565" | "4986762" | "5046811" | "5129030" | "5142606" | "5167001" | "5212761" | "5325455" | "5339379" | "5370541" | "5442726" | "5448670" | "5490229" | "5497444" | "5511144" | "5647043" | "5717810" | "5758003" | "5804765" | "5836786" | "5902155" | "5946440" | "5978540" | "6017238" | "6080011" | "6085003" | "6086415" | "6095852" | "6109978" | "6167183" | "6203130" | "6210216" | "6356697" | "6396992" | "6591051" | "6768860" | "6769551" | "6771861" | "6788846" | "6920274" | "6944389" | "6946600" | "6974438" | "7000784" | "7031588" | "7087840" | "7113687" | "7147383" | "7200314" | "7200316" | "7318321" | "7320507" | "7330629" | "7376321" | "7416347" | "7418182" | "7509015" | "7529458" | "7532799" | "7570861" | "7628644" | "7672561" | "7681187" | "7682187" | "7686518").PN. OR ("7689089" | "7722411" | "7729586" | "7744176" | "7756378" | "7756380" | "7760983" | "7826705" | "7854333" | "7856166" | "7876995" | "7887244" | "7889961" | "7903925" | "7945135" | "7945136" | "7962000" | "7974105" | "7979985" | "8014646" | "8038015" | "8038354" | "8061534" | "8075198" | "8075344" | "8121458" | "8135257" | "8154886" | "8179684" | "8184938" | "8203450" | "8254742" | "8280216" | "8285104" | "8290332" | "8290333" | "8297854" | "8301004" | "8326107" | "8331752" | "8403599" | "8411465" | "8418974" | "8433171" | "8437147" | "8437597" | "8452148" | "8452149" | "8472776" | "8520996" | "8538226" | "8559783" | "8565572" | "8625950" | "8625951" | "8705926" | "8712206" | "8746466" | "8867883" | "8879881" | "8934253" | "8938147" | "8953924" | "8965168" | "8992099" | "9008485" | "9020320" | "9075216" | "9075217" | "9116324" | "9140870" | "9170392" | "9213161" | "9213363" | "9279951" | "9690065" | "D628462" | "RE40375").PN. OR ("10215944").URPN.				
S6	2789	S4 not S5	US-PGPUB; USPAT; USOCR; FPRS; EPO; JPO; DERWENT; IBM_TDB	OR	ON	2019/04/23 20:02
S5	25	S4 and magnet$4	US-PGPUB; USPAT; USOCR; FPRS; EPO; JPO; DERWENT; IBM_TDB	OR	ON	2019/04/23 19:57

S4	2814	G02B6/4455.cpc. not S1	US-PGPUB; USPAT; USOCR; FPRS; EPO; JPO; DERWENT; IBM_TDB	OR	ON	2019/04/23 19:55
S3	15	((("PILON") near3 ("VINCENT"))).INV.	US-PGPUB; USPAT; USOCR; EPO; JPO; DERWENT	OR	ON	2019/04/23 19:13
S2	44	((("BELDEN") near3 ("CANADA") near3 ("INC"))).AS,AANM.	USPAT	OR	ON	2019/04/23 19:12
S1	218	G02B6/4455.cpc. and modular	US-PGPUB; USPAT; USOCR; FPRS; EPO; JPO; DERWENT; IBM_TDB	OR	ON	2019/04/23 18:55

EAST Search History (Interference)

<This search history is empty>

8/7/2019 2:05:45 PM
C:\Users\rpeace\Documents\EAST\Workspaces\16143831.wsp

PTO/SB/06 (09-11)
Approved for use through 1/31/2014. OMB 0651-0032
U.S. Patent and Trademark Office; U.S. DEPARTMENT OF COMMERCE
Under the Paperwork Reduction Act of 1995, no persons are required to respond to a collection of information unless it displays a valid OMB control number.

PATENT APPLICATION FEE DETERMINATION RECORD Substitute for Form PTO-875	Application or Docket Number 16/143,831	Filing Date 09/27/2018	☐ To be Mailed

ENTITY: ☑ LARGE ☐ SMALL ☐ MICRO

APPLICATION AS FILED - PART I

FOR	(Column 1) NUMBER FILED	(Column 2) NUMBER EXTRA		RATE ($)	FEE ($)
☐ BASIC FEE (37 CFR 1.16(a), (b), or (c))	N/A	N/A		N/A	
☐ SEARCH FEE (37 CFR 1.16(k), (i), or (m))	N/A	N/A		N/A	
☐ EXAMINATION FEE (37 CFR 1.16(o), (p), or (q))	N/A	N/A		N/A	
TOTAL CLAIMS (37 CFR 1.16(i))	minus 20 =	*		x $100 =	
INDEPENDENT CLAIMS (37 CFR 1.16(h))	minus 3 =	*		x $460 =	
☐ APPLICATION SIZE FEE (37 CFR 1.16(s))	If the specification and drawings exceed 100 sheets of paper, the application size fee due is $310 ($155 for small entity) for each additional 50 sheets or fraction thereof. See 35 U.S.C. 41(a)(1)(G) and 37 CFR 1.16(s).				
☐ MULTIPLE DEPENDENT CLAIM PRESENT (37 CFR 1.16(j))					
* If the difference in column 1 is less than zero, enter "0" in column 2.				TOTAL	

APPLICATION AS AMENDED - PART II

AMENDMENT	10/15/2019	(Column 1) CLAIMS REMAINING AFTER AMENDMENT		(Column 2) HIGHEST NUMBER PREVIOUSLY PAID FOR	(Column 3) PRESENT EXTRA		RATE ($)	ADDITIONAL FEE ($)
	Total (37 CFR 1.16(i))	* 18	Minus	** 20	= 0		x $100 =	0
	Independent (37 CFR 1.16(h))	* 3	Minus	*** 3	= 0		x $460 =	0
	☐ Application Size Fee (37 CFR 1.16(s))							
	☐ FIRST PRESENTATION OF MULTIPLE DEPENDENT CLAIM (37 CFR 1.16(j))							
							TOTAL ADD'L FEE	0

AMENDMENT		(Column 1) CLAIMS REMAINING AFTER AMENDMENT		(Column 2) HIGHEST NUMBER PREVIOUSLY PAID FOR	(Column 3) PRESENT EXTRA		RATE ($)	ADDITIONAL FEE ($)
	Total (37 CFR 1.16(i))	*	Minus	**	=		x $0 =	
	Independent (37 CFR 1.16(h))	*	Minus	***	=		x $0 =	
	☐ Application Size Fee (37 CFR 1.16(s))							
	☐ FIRST PRESENTATION OF MULTIPLE DEPENDENT CLAIM (37 CFR 1.16(j))							
							TOTAL ADD'L FEE	

* If the entry in column 1 is less than the entry in column 2, write "0" in column 3.	LIE
** If the "Highest Number Previously Paid For" IN THIS SPACE is less than 20, enter "20".	/RAMONA D WILSON/
*** If the "Highest Number Previously Paid For" IN THIS SPACE is less than 3, enter "3".	
The "Highest Number Previously Paid For" (Total or Independent) is the highest number found in the appropriate box in column 1.	

This collection of information is required by 37 CFR 1.16. The information is required to obtain or retain a benefit by the public which is to file (and by the USPTO to process) an application. Confidentiality is governed by 35 U.S.C. 122 and 37 CFR 1.14. This collection is estimated to take 12 minutes to complete, including gathering, preparing, and submitting the completed application form to the USPTO. Time will vary depending upon the individual case. Any comments on the amount of time you require to complete this form and/or suggestions for reducing this burden, should be sent to the Chief Information Officer, U.S. Patent and Trademark Office, U.S. Department of Commerce, P.O. Box 1450, Alexandria, VA 22313-1450. DO NOT SEND FEES OR COMPLETED FORMS TO THIS ADDRESS. **SEND TO: Commissioner for Patents, P.O. Box 1450, Alexandria, VA 22313-1450.**

If you need assistance in completing the form, call 1-800-PTO-9199 and select option 2.

IN THE UNITED STATES PATENT AND TRADEMARK OFFICE

Applicant:	Belden Canada Inc.	Customer Number:	25545
Docket No.:	771/13569.451	Confirmation No.:	4901
Serial No.:	16/143,831	Group Art:	2874
Filing Date:	September 27, 2018	Examiner:	Rhonda S. Peace
Title:	MODULAR FIBER OPTIC CASSETTE, SYSTEM AND METHOD		

Mail Stop Amendment
Commissioner for Patents
P.O. Box 1450
Alexandria, VA 22313-1450

CERTIFICATE OF ELECTRONIC TRANSMISSION
I hereby certify that this correspondence is being electronically filed with the United States Patent and Trademark Office via EFS-Web on the date below:

10/15/2019 /Hugh Mansfield/
Date [Hugh Mansfield]

RESPONSE TO FINAL OFFICE ACTION

Sir:

In response to the Final Office Action dated August 12, 2019 in connection with the above-identified patent application, please consider the following amendments and remarks. Early response to the Office Action is due on October 15, 2019.

Amendments to the Claims are reflected in the listing of claims which begins on page 2 of this paper.

Remarks/Arguments begin on page 7 of this paper.

Electronic Acknowledgement Receipt	
EFS ID:	37456296
Application Number:	16143831
International Application Number:	
Confirmation Number:	4901
Title of Invention:	MODULAR FIBER OPTIC CASSETTE, SYSTEM AND METHOD
First Named Inventor/Applicant Name:	VINCENT PILON
Customer Number:	25545
Filer:	Hugh Mansfield
Filer Authorized By:	
Attorney Docket Number:	771/13569.451
Receipt Date:	15-OCT-2019
Filing Date:	27-SEP-2018
Time Stamp:	12:35:08
Application Type:	Utility under 35 USC 111(a)

Payment information:

Submitted with Payment	no

File Listing:

Document Number	Document Description	File Name	File Size(Bytes)/ Message Digest	Multi Part /.zip	Pages (if appl.)
1		2501_USPTO_AMENDMENT_Response_to_OA_dated_190812.pdf	50369 883e35509a49393556464bf55bf0eee11cd28ac9	yes	9

	Multipart Description/PDF files in .zip description		
	Document Description	**Start**	**End**
	Applicant Arguments/Remarks Made in an Amendment	7	9
	Claims	2	6
	Response After Final Action	1	1
Warnings:			
Information:			
	Total Files Size (in bytes):	50369	

This Acknowledgement Receipt evidences receipt on the noted date by the USPTO of the indicated documents, characterized by the applicant, and including page counts, where applicable. It serves as evidence of receipt similar to a Post Card, as described in MPEP 503.

<u>New Applications Under 35 U.S.C. 111</u>
If a new application is being filed and the application includes the necessary components for a filing date (see 37 CFR 1.53(b)-(d) and MPEP 506), a Filing Receipt (37 CFR 1.54) will be issued in due course and the date shown on this Acknowledgement Receipt will establish the filing date of the application.
<u>National Stage of an International Application under 35 U.S.C. 371</u>
If a timely submission to enter the national stage of an international application is compliant with the conditions of 35 U.S.C. 371 and other applicable requirements a Form PCT/DO/EO/903 indicating acceptance of the application as a national stage submission under 35 U.S.C. 371 will be issued in addition to the Filing Receipt, in due course.
<u>New International Application Filed with the USPTO as a Receiving Office</u>
If a new international application is being filed and the international application includes the necessary components for an international filing date (see PCT Article 11 and MPEP 1810), a Notification of the International Application Number and of the International Filing Date (Form PCT/RO/105) will be issued in due course, subject to prescriptions concerning national security, and the date shown on this Acknowledgement Receipt will establish the international filing date of the application.

REMARKS

Claims 1 to 18 remain in the case. Claims 1 and 9 have been amended and new Claims 17 and 18 added having regard to the official action and to better reflect what Applicant believes to be an invention. In particular, Claim 1 has been amended to claim a modular fiber optic cassette system comprising *inter alia* wherein when arranged on at least one tray each of the fiber optic cassettes is immediately adjacent at least one other fiber optic cassette. A similar amendment has been introduced into Claim 9. Support for these amendments can be found for example in the figures as filed. Claim 15 has been amended to claim a modular fiber optic cassette comprising *inter alia* a pair of stabilizing bosses on said underside of said housing, each of said bosses on opposite sides of said magnet; wherein when said cassette is placed on said tray, each of said bosses engages a respective one of said spaced slots. Support for these amendments can be found for example in the figures as filed.

Reconsideration in view of the following remarks and entry of the foregoing amendments is respectfully requested.

REJECTION UNDER 35 U.S.C. § 102(a)

Claims 1-5 and 9-14 have been rejected as being anticipated by Sedor et al. ("US 10,215,944").

Applicant respectfully traverse the rejection as follows. Claim 1 claims a modular fiber optic cassette system comprising *inter alia* a set of fiber optic cassettes wherein when arranged on at least one tray each of the fiber optic cassettes is immediately adjacent at least one other fiber optic cassette.

Sedor et al. discloses modular trays comprising different sized fiber optic module. Like removeable rails are provided which may be removeably secured to a tray body in one of a number of positions so as to accommodate the different sizes of modules. Each of these rails are positioned between adjacent ones of the modules. As such, it cannot be said that when arranged on the tray each fiber optic cassette is immediately adjacent at least one other fiber topic cassette as now claimed at Claim 1.

In view of the above, Applicant submits that Sedor et al. does not anticipate Claim 1 of the present application. A similar argument applies to Claim 9 which Applicant submits is also not anticipated by Sedro et al.

REJECTION UNDER 35 U.S.C. § 103

Claims 6, 7, 15 and 16 have been rejected as being unpatentable over Sedor et al. and Nelson et al. ("US 4,792,203"). Applicant respectfully disagrees.

As discussed above, Claim 15 has been amended to claim a modular fiber optic cassette comprising *inter alia* a pair of stabilizing bosses on said underside of said housing, each of said bosses on opposite sides of said magnet wherein when said cassette is placed on said tray, each of said bosses engages a respective one of said spaced slots. When a cassette is mounted on a tray, the bosses engage the slots ensuring that the cassette remains in its selected position by preventing it from sliding or rotating or the like. Neither Nelsen et al. nor Sedor et al. discloses such stabilizing bosses.

In view of the above Applicant submits that both Sedor et al. and Nelsen et al. fail to disclose the fiber optic module as claimed at Claim 15 and therefore, taken either alone or in combination, Sedor et al. and Nelsen et al. fail to render Claim 15 obvious. Applicant submits, therefore, that Claim 15 is an allowable claim.

Claim 8 has been rejected as being unpatentable over Sedor et al. and Giraud et al. ("US 2016/0062050"). Giraud et al. adds nothing to address the limitations of Sedor et al. as discussed above having regard to Claim 1, and therefore Applicant submits that Claim 8 is not rendered obvious by Sedor et al. and Giraud et al. taken either alone or in combination and therefore that claim 8 is an allowable claim.

As the remaining claims all depend from an allowable claim, Applicant submits that they, too, are allowable claims.

The rejections of the original claims are believed to have been overcome by the present remarks and the introduction of new claims. From the foregoing, further and favorable action in the form of a Notice of Allowance is believed to be next in order, and such an action is earnestly solicited.

Respectfully submitted,

Date: October 15, 2019

/Hugh Mansfield/
Hugh Mansfield
Registration No.: 55757
Agent of Applicant

LAVERY, DE BILLY LLP
1 Place Ville Marie, Suite 4000
Montreal, Quebec, Canada H3B 4M4
Email: hmansfield@lavery.ca
Tel.: (514) 397-5170
Fax: (514) 397-4382

AMENDMENTS TO THE CLAIMS:

This listing of claims will replace prior versions and listings of claims in the application:

Claims have been amended as follows: Underlines indicate insertions and ~~strikethrough~~ indicate deletions.

Listing of claims:

1. (currently amended) A modular fiber optic cassette system, the system comprising:

a case comprising a top and a bottom wall and two opposed side walls, each of said sidewalls attached between respective side edges of said top and bottom wall, said walls together defining a tray receiving space there between and a forward edge of each said wall together defining an opening to said tray receiving space;

at least one tray slideably received within said tray receiving space for movement between a stored position wherein said tray is completely inside said tray receiving space and an accessible position wherein a front end of said tray is in front of said opening and outside of said tray receiving space;

a set of fiber optic cassettes, a selected plurality of the cassettes arrangeable side by side along said tray front end wherein each of said cassettes comprises a plurality of optic plug receiving receptacles arranged side by side in a row along a front thereof, a first of said set of cassettes comprising a first cassette width of one of one, two, three, four and six standard width units and a second of said cassettes comprising a second cassette width different from said first cassette width and one of one, two, three, four and six standard width units; and

a fastener for removeably securing each of said cassettes to said tray

wherein when arranged on said at least one tray each of said fiber optic cassettes is

immediately adjacent at least one other fiber optic cassette.

2. (original) The modular fiber optic cassette system of Claim 1, wherein said tray has a width dimensioned to receive at least twelve standard width units side by side.

3. (original) The modular fiber optic cassette system of Claim 1, wherein each of said cassettes comprises a multi fiber connector receiving receptacle arranged on a rear thereof and a plurality of optic fibers, one of said optic fibers interconnecting a respective one of said optic plug receiving receptacles with said multi fiber connector receiving receptacle.

4. (original) The modular fiber optic cassette system of Claim 1, wherein each of said cassettes comprises four fiber optic plug receiving receptacles arranged side by side in a row along a front thereof for each standard width unit.

5. (original) The modular fiber optic cassette system of Claim 1, wherein said system is for mounting in a rack and further comprising a pair of mounting brackets, one of said brackets attached to each of said sidewalls on either side of an outside of said case, said mounting brackets for securing said case to the rack.

6. (original) The modular fiber optic cassette system of Claim 1, wherein said tray comprises a plurality from a ferrous metal and said fastener comprises a magnet.

7. (original) The modular fiber optic cassette system of Claim 1, wherein said tray is manufactured from a ferrous metal and said fastener comprises a magnet.

8. (original) The modular fiber optic cassette system of Claim 1, further comprising at least one elongate cable management bracket comprising a cable management loop and a fastener for removeably securing said at least one bracket to said tray, said bracket having a bracket width of one of said standard width units and further wherein when installed on said

tray adjacent an installed one of said cassettes, said cable management loop is positioned in front of and to a side of said plurality of optic plug receiving receptacles of said installed cassette.

9. (currently amended) A method for organising a tray comprising a front edge in a fiber optic interconnect system, the method comprising:

defining a standard width unit wherein a width of the front edge is substantially evenly divisible by said standard width unit;

selecting a plurality of cassettes for installation on the tray from a set of cassettes having a plurality of different widths, wherein each of said different widths is evenly divisible by said standard width unit; and

releasably securing said selected cassettes along the front edge of the tray;

wherein when arranged on the tray each of said selected cassettes is immediately adjacent at least one other selected cassette.

10. (original) The method for organising a tray of Claim 9, wherein said set of cassettes comprises cassettes comprising widths of one, two, three, four and six standard width units.

11. (original) The method for organising a tray of Claim 9, wherein said selected cassettes all comprise the same width.

12. (original) The method for organising a tray of Claim 9, wherein said selected cassettes comprise a first cassette having a first width and a second cassette having a second width different from said first width.

13. (original) The method for organising a tray of Claim 9, wherein the width of the front edge is substantially evenly divisible by a maximum of twelve (12) of said standard width units.

14. (original) The method for organising a tray of Claim 12, wherein said selected cassettes further comprise a third cassette comprising a third width different from said first width and said second width.

15. (currently amended) A modular fiber optic cassette for releasably securing to a tray fabricated from a ferrous metal and comprising a plurality of spaced slots, the cassette comprising:

an elongate rectangular optic fiber receiving housing;

a plurality of optic plug receiving receptacles arranged in a row along a front of said housing;

a multi fiber connector receiving receptacle on a rear thereof;

a plurality of optic fibers interconnecting a respective one of said optic plug receiving receptacles with said multi fiber connector receiving receptacle; ~~and~~

a magnet secured to an underside of said housing; and

a pair of stabilizing bosses on said underside of said housing, each of said bosses on opposite sides of said magnet;

wherein when said cassette is placed on said tray, each of said bosses engages a respective one of said spaced slots.

16. (previously presented) The modular fiber optic cassette of Claim 15, wherein the tray has a tray width substantially evenly divisible by a plurality of standard width units, wherein a plurality of the modular cassettes are arrangeable side by side along a front end of the tray and further wherein said cassette comprise a cassette width of one of one, two, three, four and six standard width units.

17. (new) The modular fiber optic cassette system of Claim 1, wherein when arranged on said at least one tray each of said fiber optic cassettes touches at least one immediately adjacent fiber optic cassette.

18. (new) The method of Claim 9, wherein when arranged on the tray each of said selected cassettes touches at least one other immediately adjacent selected cassette.

UNITED STATES PATENT AND TRADEMARK OFFICE

UNITED STATES DEPARTMENT OF COMMERCE
United States Patent and Trademark Office
Address: COMMISSIONER FOR PATENTS
P.O. Box 1450
Alexandria, Virginia 22313-1450
www.uspto.gov

APPLICATION NO.	FILING DATE	FIRST NAMED INVENTOR	ATTORNEY DOCKET NO.	CONFIRMATION NO.
16/143,831	09/27/2018	VINCENT PILON	771/13569.451	4901

25545 7590 10/24/2019
Lavery, De Billy, LLP
1 Place Ville Marie, Suite 4000
Montreal, QUEBEC H3B 4M4
CANADA

EXAMINER
PEACE, RHONDA S

ART UNIT	PAPER NUMBER
2874	

NOTIFICATION DATE	DELIVERY MODE
10/24/2019	ELECTRONIC

Please find below and/or attached an Office communication concerning this application or proceeding.

The time period for reply, if any, is set in the attached communication.

Notice of the Office communication was sent electronically on above-indicated "Notification Date" to the following e-mail address(es):

uspto@lavery.ca

PTOL-90A (Rev. 04/07)

Advisory Action Before the Filing of an Appeal Brief	**Application No.** 16/143,831	**Applicant(s)** PILON, VINCENT	
	Examiner R. PEACE	**Art Unit** 2874	**AIA (FITF) Status** Yes

--The MAILING DATE of this communication appears on the cover sheet with the correspondence address --

THE REPLY FILED 15 October 2019 FAILS TO PLACE THIS APPLICATION IN CONDITION FOR ALLOWANCE.

NO NOTICE OF APPEAL FILED

1. ☑ The reply was filed after a final rejection. No Notice of Appeal has been filed. To avoid abandonment of this application, applicant must timely file one of the following replies: (1) an amendment, affidavit, or other evidence, which places the application in condition for allowance; (2) a Notice of Appeal (with appeal fee) in compliance with 37 CFR 41.31; or (3) a Request for Continued Examination (RCE) in compliance with 37 CFR 1.114 if this is a utility or plant application. Note that RCEs are not permitted in design applications. The reply must be filed within one of the following time periods:
   a) ☑ The period for reply expires 3 months from the mailing date of the final rejection.
   b) ☐ The period for reply expires on: (1) the mailing date of this Advisory Action; or (2) the date set forth in the final rejection, whichever is later. In no event, however, will the statutory period for reply expire later than SIX MONTHS from the mailing date of the final rejection.
   c) ☐ A prior Advisory Action was mailed more than 3 months after the mailing date of the final rejection in response to a first after-final reply filed within 2 months of the mailing date of the final rejection.The current period for reply expires ____ months from the mailing date of *the prior Advisory Action* or SIX MONTHS from the mailing date of the final rejection, whichever is earlier.
   Examiner Note: If box 1 is checked, check either box (a), (b) or (c). ONLY CHECK BOX (b) WHEN THIS ADVISORY ACTION IS THE FIRST RESPONSE TO APPLICANTS FIRST AFTER-FINAL REPLY WHICH WAS FILED WITHIN TWO MONTHS OF THE FINAL REJECTION. ONLY CHECK BOX (c) IN THE LIMITED SITUATION SET FORTH UNDER BOX (c). See MPEP 706.07(f).

Extensions of time may be obtained under 37 CFR 1.136(a). The date on which the petition under 37 CFR 1.136(a) and the appropriate extension fee have been filed is the date for purposes of determining the period of extension and the corresponding amount of the fee. The appropriate extension fee under 37 CFR 1.17(a) is calculated from: (1) the expiration date of the shortened statutory period for reply originally set in the final Office action; or (2) as set forth in (b) or (c) above, if checked. Any reply received by the Office later than three months after the mailing date of the final rejection, even if timely filed, may reduce any earned patent term adjustment. See 37 CFR 1.704(b).

NOTICE OF APPEAL

2. ☐ The Notice of Appeal was filed on _____. A brief in compliance with 37 CFR 41.37 must be filed within two months of the date of filing the Notice of Appeal (37 CFR 41.37(a)), or any extension thereof (37 CFR 41.37(e)), to avoid dismissal of the appeal. Since a Notice of Appeal has been filed, any reply must be filed within the time period set forth in 37CFR 41.37(a).

AMENDMENTS

3. ☑ The proposed amendments filed after a final rejection, but prior to the date of filing a brief, will not be entered because
   a) ☑ They raise new issues that would require further consideration and/or search (see NOTE below);
   b) ☐ They raise the issue of new matter (see NOTE below);
   c) ☑ They are not deemed to place the application in better form for appeal by materially reducing or simplifying the issues for appeal; and/or
   d) ☐ They present additional claims without canceling a corresponding number of finally rejected claims.
   NOTE: See Continuation Sheet (See 37CFR 1.116 and 41.33(a)).
4. ☐ The amendments are not in compliance with 37CFR 1.121. See attached Notice of Non-Compliant Amendment (PTOL-324).
5. ☐ Applicants reply has overcome the following rejection(s): _____
6. ☐ Newly proposed or amended claim(s) _____ would be allowable if submitted in a separate, timely filed amendment canceling the non-allowable claim(s).
7. ☑ For purposes of appeal, the proposed amendment(s):(a)☑ will not be entered, or (b)☐ will be entered, and an explanation of how the new or amended claims would be rejected is provided below or appended.

AFFIDAVIT OR OTHER EVIDENCE

8. ☐ A declaration(s)/affidavit(s) under **37 CFR 1.130(b)** was/were filed on _____
9. ☐ The affidavit or other evidence filed after final action, but before or on the date of filing a Notice of Appeal will not be entered because applicant failed to provide a showing of good and sufficient reasons why the affidavit or other evidence is necessary and was not earlier presented. See 37 CFR 1.116(e).
10. ☐ The affidavit or other evidence filed after the date of filing the Notice of Appeal, but prior to the date of filing a brief, will not be entered because the affidavit or other evidence failed to overcome all rejections under appeal and/or appellant fails to provide a showing of good and sufficient reasons why it is necessary and was not earlier presented. See 37 CFR 41.33(d)(1).
11. ☐ The affidavit or other evidence is entered. An explanation of the status of the claims after entry is below or attached.

REQUEST FOR RECONSIDERATION/OTHER

12. ☐ The request for reconsideration has been considered but does NOT place the application in condition for allowance because: _____.
13. ☐ Note the attached Information *Disclosure Statement*(s). (PTO/SB/08) Paper No(s). _____
14. ☐ Other: _____.

STATUS OF CLAIMS

15. The status of the claim(s) is (or will be) as follows:
    Claim(s) allowed:_____.
    Claim(s) objected to:_____.
    Claim(s) rejected:1-16.
    Claim(s) withdrawn from consideration:_____.

/RHONDA S PEACE/ Primary Examiner, Art Unit 2874	

Continuation of 3. NOTE: The claims filed 10/15/19 recites new limitations, and therefore requires further search and/or consideration.

DO NOT ENTER: /R.S.P./ 10/21/2019

IN THE UNITED STATES PATENT AND TRADEMARK OFFICE

Applicant:	Belden Canada Inc.	Customer Number:	25545
Docket No.:	771/13569.451	Confirmation No.:	4901
Serial No.:	16/143,831	Group Art:	2874
Filing Date:	September 27, 2018	Examiner:	Rhonda S. Peace
Title:	MODULAR FIBER OPTIC CASSETTE, SYSTEM AND METHOD		

Mail Stop Amendment
Commissioner for Patents
P.O. Box 1450
Alexandria, VA 22313-1450

CERTIFICATE OF ELECTRONIC TRANSMISSION
I hereby certify that this correspondence is being electronically filed with the United States Patent and Trademark Office via EFS-Web on the date below:

10/15/2019 /Hugh Mansfield/
Date [Hugh Mansfield]

RESPONSE TO FINAL OFFICE ACTION

Sir:

In response to the Final Office Action dated August 12, 2019 in connection with the above-identified patent application, please consider the following amendments and remarks. Early response to the Office Action is due on October 15, 2019.

Amendments to the Claims are reflected in the listing of claims which begins on page 2 of this paper.

Remarks/Arguments begin on page 7 of this paper.

PTO/SB/30EFS (02-18)
Approved for use through 11/30/2020. OMB 0651-0031
U.S. Patent and Trademark Office; U.S. DEPARTMENT OF COMMERCE
Under the Paperwork Reduction Act of 1995, no persons are required to respond to a collection of information unless it contains a valid OMB control number.

REQUEST FOR CONTINUED EXAMINATION(RCE)TRANSMITTAL
(Submitted Only via EFS-Web)

Application Number	16/143,831	Filing Date	2018-09-27	Docket Number (if applicable)	771/13569.451	Art Unit	2874
First Named Inventor	Vincent PILON			Examiner Name	Rhonda S. PEACE		

This is a Request for Continued Examination (RCE) under 37 CFR 1.114 of the above-identified application.
Request for Continued Examination (RCE) practice under 37 CFR 1.114 does not apply to any utility or plant application filed prior to June 8, 1995, or to any design application. The Instruction Sheet for this form is located at WWW.USPTO.GOV

SUBMISSION REQUIRED UNDER 37 CFR 1.114

Note: If the RCE is proper, any previously filed unentered amendments and amendments enclosed with the RCE will be entered in the order in which they were filed unless applicant instructs otherwise. If applicant does not wish to have any previously filed unentered amendment(s) entered, applicant must request non-entry of such amendment(s).

☒ Previously submitted. If a final Office action is outstanding, any amendments filed after the final Office action may be considered as a submission even if this box is not checked.

- ☐ Consider the arguments in the Appeal Brief or Reply Brief previously filed on _____
- ☐ Other _____

☐ Enclosed

- ☐ Amendment/Reply
- ☐ Information Disclosure Statement (IDS)
- ☐ Affidavit(s)/ Declaration(s)
- ☐ Other _____

MISCELLANEOUS

☐ Suspension of action on the above-identified application is requested under 37 CFR 1.103(c) for a period of months _____
(Period of suspension shall not exceed 3 months; Fee under 37 CFR 1.17(i) required)

☐ Other _____

FEES

☒ **The RCE fee under 37 CFR 1.17(e) is required by 37 CFR 1.114 when the RCE is filed.**
The Director is hereby authorized to charge any underpayment of fees, or credit any overpayments, to
Deposit Account No 071742

SIGNATURE OF APPLICANT, ATTORNEY, OR AGENT REQUIRED

X Patent Practitioner Signature
Applicant Signature

PTO/SB/30EFS (02-18)
Approved for use through 11/30/2020. OMB 0651-0031
U.S. Patent and Trademark Office; U.S. DEPARTMENT OF COMMERCE
Under the Paperwork Reduction Act of 1995, no persons are required to respond to a collection of information unless it contains a valid OMB control number.

Signature of Registered U.S. Patent Practitioner			
Signature	/HUGH MANSFIELD/	Date (YYYY-MM-DD)	2019-12-11
Name	Hugh Mansfield	Registration Number	55757

This collection of information is required by 37 CFR 1.114. The information is required to obtain or retain a benefit by the public which is to file (and by the USPTO to process) an application. Confidentiality is governed by 35 U.S.C. 122 and 37 CFR 1.11 and 1.14. This collection is estimated to take 12 minutes to complete, including gathering, preparing, and submitting the completed application form to the USPTO. Time will vary depending upon the individual case. Any comments on the amount of time you require to complete this form and/or suggestions for reducing this burden, should be sent to the Chief Information Officer, U.S. Patent and Trademark Office, U.S. Department of Commerce, P.O. Box 1450, Alexandria, VA 22313-1450.

If you need assistance in completing the form, call 1-800-PTO-9199 and select option 2.

Privacy Act Statement

The Privacy Act of 1974 (P.L. 93-579) requires that you be given certain information in connection with your submission of the attached form related to a patent application or patent. Accordingly, pursuant to the requirements of the Act, please be advised that: (1) the general authority for the collection of this information is 35 U.S.C. 2(b)(2); (2) furnishing of the information solicited is voluntary; and (3) the principal purpose for which the information is used by the U.S. Patent and Trademark Office is to process and/or examine your submission related to a patent application or patent. If you do not furnish the requested information, the U.S. Patent and Trademark Office may not be able to process and/or examine your submission, which may result in termination of proceedings or abandonment of the application or expiration of the patent.

The information provided by you in this form will be subject to the following routine uses:

1. The information on this form will be treated confidentially to the extent allowed under the Freedom of Information Act (5 U.S.C. 552) and the Privacy Act (5 U.S.C. 552a). Records from this system of records may be disclosed to the Department of Justice to determine whether the Freedom of Information Act requires disclosure of these records.

2. A record from this system of records may be disclosed, as a routine use, in the course of presenting evidence to a court, magistrate, or administrative tribunal, including disclosures to opposing counsel in the course of settlement negotiations.

3. A record in this system of records may be disclosed, as a routine use, to a Member of Congress submitting a request involving an individual, to whom the record pertains, when the individual has requested assistance from the Member with respect to the subject matter of the record.

4. A record in this system of records may be disclosed, as a routine use, to a contractor of the Agency having need for the information in order to perform a contract. Recipients of information shall be required to comply with the requirements of the Privacy Act of 1974, as amended, pursuant to 5 U.S.C. 552a(m).

5. A record related to an International Application filed under the Patent Cooperation Treaty in this system of records may be disclosed, as a routine use, to the International Bureau of the World Intellectual Property Organization, pursuant to the Patent Cooperation Treaty.

6. A record in this system of records may be disclosed, as a routine use, to another federal agency for purposes of National Security review (35 U.S.C. 181) and for review pursuant to the Atomic Energy Act (42 U.S.C. 218(c)).

7. A record from this system of records may be disclosed, as a routine use, to the Administrator, General Services, or his/her designee, during an inspection of records conducted by GSA as part of that agency's responsibility to recommend improvements in records management practices and programs, under authority of 44 U.S.C. 2904 and 2906. Such disclosure shall be made in accordance with the GSA regulations governing inspection of records for this purpose, and any other relevant (i.e., GSA or Commerce) directive. Such disclosure shall not be used to make determinations about individuals.

8. A record from this system of records may be disclosed, as a routine use, to the public after either publication of the application pursuant to 35 U.S.C. 122(b) or issuance of a patent pursuant to 35 U.S.C. 151. Further, a record may be disclosed, subject to the limitations of 37 CFR 1.14, as a routine use, to the public if the record was filed in an application which became abandoned or in which the proceedings were terminated and which application is referenced by either a published application, an application open to public inspections or an issued patent.

9. A record from this system of records may be disclosed, as a routine use, to a Federal, State, or local law enforcement agency, if the USPTO becomes aware of a violation or potential violation of law or regulation.

PTO/AIA/22 (03-13)
Approved for use through 11/30/2020. OMB 0651-0031
U.S. Patent and Trademark Office; U.S. DEPARTMENT OF COMMERCE
Under the Paperwork Reduction Act of 1995, no persons are required to respond to a collection of information unless it displays a valid OMB control number.

PETITION FOR EXTENSION OF TIME UNDER 37 CFR 1.136(a)	Docket Number (Optional) 771/13569.451
Application Number 16/143,831	Filed 2018-09-27
For MODULAR FIBER OPTIC CASSETTE, SYSTEM AND METHOD	
Art Unit 2874	Examiner Rhonda S. PEACE

This is a request under the provisions of 37 CFR 1.136(a) to extend the period for filing a reply in the above-identified application.

The requested extension and fee are as follows (check time period desired and enter the appropriate fee below):

		Fee	Small Entity Fee	Micro Entity Fee	
☑	One month (37 CFR 1.17(a)(1))	$200	$100	$50	$ 200
☐	Two months (37 CFR 1.17(a)(2))	$600	$300	$150	$
☐	Three months (37 CFR 1.17(a)(3))	$1,400	$700	$350	$
☐	Four months (37 CFR 1.17(a)(4))	$2,200	$1,100	$550	$
☐	Five months (37 CFR 1.17(a)(5))	$3,000	$1,500	$750	$

☐ Applicant asserts small entity status. See 37 CFR 1.27.

☐ Applicant certifies micro entity status. See 37 CFR 1.29.
Form PTO/SB/15A or B or equivalent must either be enclosed or have been submitted previously.

☐ A check in the amount of the fee is enclosed.

☐ Payment by credit card. Form PTO-2038 is attached.

☐ The Director has already been authorized to charge fees in this application to a Deposit Account.

☐ The Director is hereby authorized to charge any fees which may be required, or credit any overpayment, to Deposit Account Number _____.

☑ Payment made via EFS-Web.

WARNING: Information on this form may become public. Credit card information should not be included on this form. Provide credit card information and authorization on PTO-2038.

I am the

☐ applicant.

☑ attorney or agent of record. Registration number 55757.

☐ attorney or agent acting under 37 CFR 1.34. Registration number _____.

/HUGH MANSFIELD/	December 11, 2019
Signature	Date
Hugh Mansfield	
Typed or printed name	Telephone Number

NOTE: This form must be signed in accordance with 37 CFR 1.33. See 37 CFR 1.4 for signature requirements and certifications. Submit multiple forms if more than one signature is required, see below*.

☐ * Total of _____ forms are submitted.

This collection of information is required by 37 CFR 1.136(a). The information is required to obtain or retain a benefit by the public, which is to file (and by the USPTO to process) an application. Confidentiality is governed by 35 U.S.C. 122 and 37 CFR 1.11 and 1.14. This collection is estimated to take 6 minutes to complete, including gathering, preparing, and submitting the completed application form to the USPTO. Time will vary depending upon the individual case. Any comments on the amount of time you require to complete this form and/or suggestions for reducing this burden should be sent to the Chief Information Officer, U.S. Patent and Trademark Office, U.S. Department of Commerce, P.O. Box 1450, Alexandria, VA 22313-1450. DO NOT SEND FEES OR COMPLETED FORMS TO THIS ADDRESS. SEND TO: Mail Stop PCT, Commissioner for Patents, P.O. Box 1450, Alexandria, VA 22313-1450.

Privacy Act Statement

The **Privacy Act of 1974 (P.L. 93-579)** requires that you be given certain information in connection with your submission of the attached form related to a patent application or patent. Accordingly, pursuant to the requirements of the Act, please be advised that: (1) the general authority for the collection of this information is 35 U.S.C. 2(b)(2); (2) furnishing of the information solicited is voluntary; and (3) the principal purpose for which the information is used by the U.S. Patent and Trademark Office is to process and/or examine your submission related to a patent application or patent. If you do not furnish the requested information, the U.S. Patent and Trademark Office may not be able to process and/or examine your submission, which may result in termination of proceedings or abandonment of the application or expiration of the patent.

The information provided by you in this form will be subject to the following routine uses:

1. The information on this form will be treated confidentially to the extent allowed under the Freedom of Information Act (5 U.S.C. 552) and the Privacy Act (5 U.S.C 552a). Records from this system of records may be disclosed to the Department of Justice to determine whether disclosure of these records is required by the Freedom of Information Act.
2. A record from this system of records may be disclosed, as a routine use, in the course of presenting evidence to a court, magistrate, or administrative tribunal, including disclosures to opposing counsel in the course of settlement negotiations.
3. A record in this system of records may be disclosed, as a routine use, to a Member of Congress submitting a request involving an individual, to whom the record pertains, when the individual has requested assistance from the Member with respect to the subject matter of the record.
4. A record in this system of records may be disclosed, as a routine use, to a contractor of the Agency having need for the information in order to perform a contract. Recipients of information shall be required to comply with the requirements of the Privacy Act of 1974, as amended, pursuant to 5 U.S.C. 552a(m).
5. A record related to an International Application filed under the Patent Cooperation Treaty in this system of records may be disclosed, as a routine use, to the International Bureau of the World Intellectual Property Organization, pursuant to the Patent Cooperation Treaty.
6. A record in this system of records may be disclosed, as a routine use, to another federal agency for purposes of National Security review (35 U.S.C. 181) and for review pursuant to the Atomic Energy Act (42 U.S.C. 218(c)).
7. A record from this system of records may be disclosed, as a routine use, to the Administrator, General Services, or his/her designee, during an inspection of records conducted by GSA as part of that agency's responsibility to recommend improvements in records management practices and programs, under authority of 44 U.S.C. 2904 and 2906. Such disclosure shall be made in accordance with the GSA regulations governing inspection of records for this purpose, and any other relevant (*i.e.*, GSA or Commerce) directive. Such disclosure shall not be used to make determinations about individuals.
8. A record from this system of records may be disclosed, as a routine use, to the public after either publication of the application pursuant to 35 U.S.C. 122(b) or issuance of a patent pursuant to 35 U.S.C. 151. Further, a record may be disclosed, subject to the limitations of 37 CFR 1.14, as a routine use, to the public if the record was filed in an application which became abandoned or in which the proceedings were terminated and which application is referenced by either a published application, an application open to public inspection or an issued patent.
9. A record from this system of records may be disclosed, as a routine use, to a Federal, State, or local law enforcement agency, if the USPTO becomes aware of a violation or potential violation of law or regulation.

Electronic Patent Application Fee Transmittal

Application Number:	16143831
Filing Date:	27-Sep-2018
Title of Invention:	MODULAR FIBER OPTIC CASSETTE, SYSTEM AND METHOD
First Named Inventor/Applicant Name:	VINCENT PILON
Filer:	Hugh Mansfield/Regeline Jean Francois
Attorney Docket Number:	771/13569.451

Filed as Large Entity

Filing Fees for Utility under 35 USC 111(a)

Description	Fee Code	Quantity	Amount	Sub-Total in USD($)
Basic Filing:				
Pages:				
Claims:				
Miscellaneous-Filing:				
Petition:				
Patent-Appeals-and-Interference:				
Post-Allowance-and-Post-Issuance:				
Extension-of-Time:				

Description	Fee Code	Quantity	Amount	Sub-Total in USD($)
Extension - 1 month with $0 paid	1251	1	200	200
Miscellaneous:				
RCE- 1ST REQUEST	1801	1	1300	1300
		Total in USD ($)		**1500**

Electronic Acknowledgement Receipt	
EFS ID:	37994738
Application Number:	16143831
International Application Number:	
Confirmation Number:	4901
Title of Invention:	MODULAR FIBER OPTIC CASSETTE, SYSTEM AND METHOD
First Named Inventor/Applicant Name:	VINCENT PILON
Customer Number:	25545
Filer:	Hugh Mansfield/Regeline Jean Francois
Filer Authorized By:	Hugh Mansfield
Attorney Docket Number:	771/13569.451
Receipt Date:	11-DEC-2019
Filing Date:	27-SEP-2018
Time Stamp:	16:51:31
Application Type:	Utility under 35 USC 111(a)

Payment information:

Submitted with Payment	yes
Payment Type	CARD
Payment was successfully received in RAM	$1500
RAM confirmation Number	E2019BAG53264963
Deposit Account	
Authorized User	
The Director of the USPTO is hereby authorized to charge indicated fees and credit any overpayment as follows:	

File Listing:

Document Number	Document Description	File Name	File Size(Bytes)/ Message Digest	Multi Part /.zip	Pages (if appl.)
1	Request for Continued Examination (RCE)	USPTO_RCE_Form.pdf	1351413 3c3dd756aa0cfc43d2d6e7c2a4bd0a70cde9dd96	no	3
Warnings:					
Information:					
2	Extension of Time	USPTO_Time_Extension.pdf	137807 1c253977bf5e1a12d27a11470eee6bd5bd842b06	no	2
Warnings:					
Information:					
3	Fee Worksheet (SB06)	fee-info.pdf	32632 4ce4cc8b1fa142eb0c19be33fb6e9674afe9a86d	no	2
Warnings:					
Information:					
		Total Files Size (in bytes):	1521852		

This Acknowledgement Receipt evidences receipt on the noted date by the USPTO of the indicated documents, characterized by the applicant, and including page counts, where applicable. It serves as evidence of receipt similar to a Post Card, as described in MPEP 503.

New Applications Under 35 U.S.C. 111
If a new application is being filed and the application includes the necessary components for a filing date (see 37 CFR 1.53(b)-(d) and MPEP 506), a Filing Receipt (37 CFR 1.54) will be issued in due course and the date shown on this Acknowledgement Receipt will establish the filing date of the application.
National Stage of an International Application under 35 U.S.C. 371
If a timely submission to enter the national stage of an international application is compliant with the conditions of 35 U.S.C. 371 and other applicable requirements a Form PCT/DO/EO/903 indicating acceptance of the application as a national stage submission under 35 U.S.C. 371 will be issued in addition to the Filing Receipt, in due course.
New International Application Filed with the USPTO as a Receiving Office
If a new international application is being filed and the international application includes the necessary components for an international filing date (see PCT Article 11 and MPEP 1810), a Notification of the International Application Number and of the International Filing Date (Form PCT/RO/105) will be issued in due course, subject to prescriptions concerning national security, and the date shown on this Acknowledgement Receipt will establish the international filing date of the application.

PTO/SB/06 (09-11)
Approved for use through 1/31/2014. OMB 0651-0032
U.S. Patent and Trademark Office; U.S. DEPARTMENT OF COMMERCE
Under the Paperwork Reduction Act of 1995, no persons are required to respond to a collection of information unless it displays a valid OMB control number.

PATENT APPLICATION FEE DETERMINATION RECORD Substitute for Form PTO-875	Application or Docket Number 16/143,831	Filing Date 09/27/2018	☐ To be Mailed

ENTITY: ☑ LARGE ☐ SMALL ☐ MICRO

APPLICATION AS FILED - PART I

FOR	(Column 1) NUMBER FILED	(Column 2) NUMBER EXTRA		RATE ($)	FEE ($)
☐ BASIC FEE (37 CFR 1.16(a), (b), or (c))	N/A	N/A		N/A	
☐ SEARCH FEE (37 CFR 1.16(k), (i), or (m))	N/A	N/A		N/A	
☐ EXAMINATION FEE (37 CFR 1.16(o), (p), or (q))	N/A	N/A		N/A	
TOTAL CLAIMS (37 CFR 1.16(i))	minus 20 =	*		x $100 =	
INDEPENDENT CLAIMS (37 CFR 1.16(h))	minus 3 =	*		x $460 =	
☐ APPLICATION SIZE FEE (37 CFR 1.16(s))	If the specification and drawings exceed 100 sheets of paper, the application size fee due is $310 ($155 for small entity) for each additional 50 sheets or fraction thereof. See 35 U.S.C. 41(a)(1)(G) and 37 CFR 1.16(s).				
☐ MULTIPLE DEPENDENT CLAIM PRESENT (37 CFR 1.16(j))					
* If the difference in column 1 is less than zero, enter "0" in column 2.				TOTAL	

APPLICATION AS AMENDED - PART II

AMENDMENT		(Column 1) CLAIMS REMAINING AFTER AMENDMENT		(Column 2) HIGHEST NUMBER PREVIOUSLY PAID FOR	(Column 3) PRESENT EXTRA		RATE ($)	ADDITIONAL FEE ($)
	12/11/2019							
	Total (37 CFR 1.16(i))	* 18	Minus	** 20	= 0		x $100 =	0
	Independent (37 CFR 1.16(h))	* 3	Minus	*** 3	= 0		x $460 =	0
	☐ Application Size Fee (37 CFR 1.16(s))							
	☐ FIRST PRESENTATION OF MULTIPLE DEPENDENT CLAIM (37 CFR 1.16(j))							
							TOTAL ADD'L FEE	0

AMENDMENT		(Column 1) CLAIMS REMAINING AFTER AMENDMENT		(Column 2) HIGHEST NUMBER PREVIOUSLY PAID FOR	(Column 3) PRESENT EXTRA		RATE ($)	ADDITIONAL FEE ($)
	Total (37 CFR 1.16(i))	*	Minus	**	=		x $0 =	
	Independent (37 CFR 1.16(h))	*	Minus	***	=		x $0 =	
	☐ Application Size Fee (37 CFR 1.16(s))							
	☐ FIRST PRESENTATION OF MULTIPLE DEPENDENT CLAIM (37 CFR 1.16(j))							
							TOTAL ADD'L FEE	

* If the entry in column 1 is less than the entry in column 2, write "0" in column 3.	SLIE
** If the "Highest Number Previously Paid For" IN THIS SPACE is less than 20, enter "20".	/WANDA M BARNES/
*** If the "Highest Number Previously Paid For" IN THIS SPACE is less than 3, enter "3".	
The "Highest Number Previously Paid For" (Total or Independent) is the highest number found in the appropriate box in column 1.	

This collection of information is required by 37 CFR 1.16. The information is required to obtain or retain a benefit by the public which is to file (and by the USPTO to process) an application. Confidentiality is governed by 35 U.S.C. 122 and 37 CFR 1.14. This collection is estimated to take 12 minutes to complete, including gathering, preparing, and submitting the completed application form to the USPTO. Time will vary depending upon the individual case. Any comments on the amount of time you require to complete this form and/or suggestions for reducing this burden, should be sent to the Chief Information Officer, U.S. Patent and Trademark Office, U.S. Department of Commerce, P.O. Box 1450, Alexandria, VA 22313-1450. DO NOT SEND FEES OR COMPLETED FORMS TO THIS ADDRESS. **SEND TO: Commissioner for Patents, P.O. Box 1450, Alexandria, VA 22313-1450.**

If you need assistance in completing the form, call 1-800-PTO-9199 and select option 2.

UNITED STATES PATENT AND TRADEMARK OFFICE

UNITED STATES DEPARTMENT OF COMMERCE
United States Patent and Trademark Office
Address: COMMISSIONER FOR PATENTS
P.O. Box 1450
Alexandria, Virginia 22313-1450
www.uspto.gov

APPLICATION NO.	FILING DATE	FIRST NAMED INVENTOR	ATTORNEY DOCKET NO.	CONFIRMATION NO.
16/143,831	09/27/2018	VINCENT PILON	771/13569.451	4901

25545 7590 12/20/2019
Lavery, De Billy, LLP
1 Place Ville Marie, Suite 4000
Montreal, QUEBEC H3B 4M4
CANADA

EXAMINER
PEACE, RHONDA S

ART UNIT	PAPER NUMBER
2874	

NOTIFICATION DATE	DELIVERY MODE
12/20/2019	ELECTRONIC

Please find below and/or attached an Office communication concerning this application or proceeding.

The time period for reply, if any, is set in the attached communication.

Notice of the Office communication was sent electronically on above-indicated "Notification Date" to the following e-mail address(es):

uspto@lavery.ca

PTOL-90A (Rev. 04/07)

Office Action Summary	Application No. 16/143,831	Applicant(s) PILON, VINCENT	
	Examiner R. PEACE	Art Unit 2874	AIA (FITF) Status Yes

-- The MAILING DATE of this communication appears on the cover sheet with the correspondence address --

Period for Reply

A SHORTENED STATUTORY PERIOD FOR REPLY IS SET TO EXPIRE 3 MONTHS FROM THE MAILING DATE OF THIS COMMUNICATION.

- Extensions of time may be available under the provisions of 37 CFR 1.136(a). In no event, however, may a reply be timely filed after SIX (6) MONTHS from the mailing date of this communication.
- If NO period for reply is specified above, the maximum statutory period will apply and will expire SIX (6) MONTHS from the mailing date of this communication.
- Failure to reply within the set or extended period for reply will, by statute, cause the application to become ABANDONED (35 U.S.C. § 133). Any reply received by the Office later than three months after the mailing date of this communication, even if timely filed, may reduce any earned patent term adjustment. See 37 CFR 1.704(b).

Status

1)☑ Responsive to communication(s) filed on 12/11/19.

☐ A declaration(s)/affidavit(s) under **37 CFR 1.130(b)** was/were filed on _____.

2a)☐ This action is **FINAL.** 2b) ☑ This action is non-final.

3)☐ An election was made by the applicant in response to a restriction requirement set forth during the interview on _____; the restriction requirement and election have been incorporated into this action.

4)☐ Since this application is in condition for allowance except for formal matters, prosecution as to the merits is closed in accordance with the practice under *Ex parte Quayle*, 1935 C.D. 11, 453 O.G. 213.

Disposition of Claims*

5) ☑ Claim(s) 1-18 is/are pending in the application.

5a) Of the above claim(s) _____ is/are withdrawn from consideration.

6) ☑ Claim(s) 15-16 is/are allowed.

7) ☑ Claim(s) 1-14 is/are rejected.

8) ☑ Claim(s) 17-18 is/are objected to.

9) ☐ Claim(s) _____ are subject to restriction and/or election requirement

* If any claims have been determined allowable, you may be eligible to benefit from the **Patent Prosecution Highway** program at a participating intellectual property office for the corresponding application. For more information, please see http://www.uspto.gov/patents/init_events/pph/index.jsp or send an inquiry to **PPHfeedback@uspto.gov.**

Application Papers

10)☐ The specification is objected to by the Examiner.

11)☑ The drawing(s) filed on 9/27/18 is/are: a)☑ accepted or b)☐ objected to by the Examiner.

Applicant may not request that any objection to the drawing(s) be held in abeyance. See 37 CFR 1.85(a).

Replacement drawing sheet(s) including the correction is required if the drawing(s) is objected to. See 37 CFR 1.121(d).

Priority under 35 U.S.C. § 119

12)☐ Acknowledgment is made of a claim for foreign priority under 35 U.S.C. § 119(a)-(d) or (f).

Certified copies:

a)☐ All b)☐ Some** c)☐ None of the:

1.☐ Certified copies of the priority documents have been received.

2.☐ Certified copies of the priority documents have been received in Application No. _____.

3.☐ Copies of the certified copies of the priority documents have been received in this National Stage application from the International Bureau (PCT Rule 17.2(a)).

** See the attached detailed Office action for a list of the certified copies not received.

Attachment(s)

1) ☑ Notice of References Cited (PTO-892)

2) ☐ Information Disclosure Statement(s) (PTO/SB/08a and/or PTO/SB/08b) Paper No(s)/Mail Date _____.

3) ☐ Interview Summary (PTO-413) Paper No(s)/Mail Date _____.

4) ☐ Other: _____.

DETAILED ACTION

Notice of Pre-AIA or AIA Status

The present application, filed on or after March 16, 2013, is being examined under the first inventor to file provisions of the AIA.

Continued Examination Under 37 CFR 1.114

A request for continued examination under 37 CFR 1.114, including the fee set forth in 37 CFR 1.17(e), was filed in this application after final rejection. Since this application is eligible for continued examination under 37 CFR 1.114, and the fee set forth in 37 CFR 1.17(e) has been timely paid, the finality of the previous Office action has been withdrawn pursuant to 37 CFR 1.114. Applicant's submission filed on 12/11/19 has been entered.

Response to Arguments

Applicant's arguments, see page 7-8, filed 10/15/19, with respect to the rejection of claims 1-5 and 9-14 under 35 U.S.C. 102(a)(2) as anticipated by Sedor et al (US 10,215,944), have been fully considered but they are not persuasive.

Applicant argues Sedor et al fails to disclose or reasonably suggest each fiber optic cassette is immediately adjacent at least one other fiber optic cassette when arranged on the tray. Applicant argues Sedor et al shows removable rails between each of the cassettes on the tray, and as such the cassettes cannot be considered "immediately adjacent." The Examiner respectfully disagrees.

"Immediately adjacent" is not specifically defined by Applicant's disclosure, and therefore interpreted according to the broadest reasonable interpretation of the phrase. Broadly, the term "adjacent" in reference to objects requires the objects be in the

general vicinity of each other. "Immediately adjacent" is interpreted as requiring a smaller distance between objects (as opposed to "adjacent"), but does not preclude intervening structure between the objects, and instead only requires the objects are placed closely together. The cassettes of Sedor et al, while having rails placed therebetween, are nonetheless situated very close to each other and therefore meet the claim limitation of being "immediately adjacent."

Applicant's arguments are unpersuasive and the prior art rejection of claims 1-5 and 9-14 are maintained.

Claim Rejections - 35 USC § 102

In the event the determination of the status of the application as subject to AIA 35 U.S.C. 102 and 103 (or as subject to pre-AIA 35 U.S.C. 102 and 103) is incorrect, any correction of the statutory basis for the rejection will not be considered a new ground of rejection if the prior art relied upon, and the rationale supporting the rejection, would be the same under either status.

The following is a quotation of the appropriate paragraphs of 35 U.S.C. 102 that form the basis for the rejections under this section made in this Office action:

> A person shall be entitled to a patent unless –
>
> (a)(2) the claimed invention was described in a patent issued under section 151, or in an application for patent published or deemed published under section 122(b), in which the patent or application, as the case may be, names another inventor and was effectively filed before the effective filing date of the claimed invention.

Claim(s) 1-5 and 9-14 is/are rejected under 35 U.S.C. 102(a)(2) as being anticipated by Sedor et al (US 10,215,944 B2).

Re. Claim 1, Sedor et al discloses a modular fiber optic cassette system 50 (Fig 1A; col. 4 lines 14-16), the system comprising:

a case 100 comprising a top wall 102 and a bottom wall 112 and two opposed side walls 104/106, each of said sidewalls 104/106 attached between respective side edges of said top and bottom wall 102/112, said walls together defining a tray receiving space there between and a forward edge of each said wall together defining an opening to said tray receiving space (Figs 1A and 2A-2C; col. 4 lines 36-51);

at least one tray 120 slideably received within said tray receiving space for movement between a stored position wherein said tray 120 is completely inside said tray receiving space and an accessible position wherein a front end of said tray 120 is in front of said opening and outside of said tray receiving space (Figs 1A, 1B, and 5; col. 4 lines 62-67; col. 5 lines 1-22);

a set of fiber optic cassettes 30/40, a selected plurality of the cassettes arrangeable side by side along said tray front end wherein each of said cassettes comprises a plurality of optic plug receiving receptacles arranged side by side in a row along a front thereof, a first 40 of said set of cassettes 30/40 comprising a first cassette width of one of one, two, three, four and six standard width units (i.e. first cassette 40 has a width of two standard width units; Figs 9-10) and a second of said cassettes 30 comprising a second cassette width different from said first cassette width and one of one, two, three, four and six standard width units (i.e. second cassette 30 of Figs 7-8 has a width of three standard width units) (Figs 7-10; col. 4 lines 19-35; col. 5 lines 39-47); and

a fastener 180 for removeably securing each of said cassettes 30/40 to said tray 120 (Figs 6B and 7-10; col. 5 lines 23-47),

wherein when arranged on the tray 120, each of said fiber optic cassettes 30/40 is immediately adjacent at least one other fiber optic cassette 30/40 (Figs 7-10).

It is of note, for purposes of Sedor et al, one standardized width unit accommodates four receptacles, as in the current invention.

Re. Claim 2, Sedor et al discloses said tray 120 has a width dimensioned to receive at least twelve standard width units side by side (Figs 7-10; col. 5 lines 35-51).

Re. Claim 3, Sedor et al discloses each of said cassettes 30/40 comprises a multi-fiber connector receiving receptacle arranged on a rear thereof and a plurality of optic fibers, one of said optic fibers interconnecting a respective one of said optic plug receiving receptacles with said multi fiber connector receiving receptacle (Figs 7-10; col. 4 lines 23-31).

Re. Claim 4, Sedor et al discloses each of said cassettes 30/40 comprises four fiber optic plug receiving receptacles arranged side by side in a row along a front thereof for each standard width unit (Figs 7-10; col. 4 lines 19-35; col. 5 lines 39-47).

Re. Claim 5, Sedor et al discloses said system 50 is for mounting in a rack 2/4 and further comprising a pair of mounting brackets 108, one of said brackets 108 attached to each of said sidewalls 104/106 on either side of an outside of said case 100, said mounting brackets 108 for securing said case 100 to the rack 2/4 (Fig 1A; col. 4 lines 51-54).

Re. Claim 9, Sedor et al discloses a method for organizing a tray comprising a front edge in a fiber optic interconnect system, the method comprising:

defining a standard width unit wherein a width of the front edge is substantially evenly divisible by said standard width unit (col. 1 lines 24-32);

selecting a plurality of cassettes for installation on the tray from a set of cassettes 30/40 having a plurality of different widths (i.e. cassette 40 of Figs 9-10 has a width of two standard width units; second cassette 30 of Figs 7-8 has a width of three standard width units), wherein each of said different widths is evenly divisible by said standard width unit (Figs 7-10; col. 4 lines 19-35; col. 5 lines 39-47); and

releasably securing said selected cassettes along the front edge of the tray 120 (Figs 6B and 7-10; col. 5 lines 23-47);

wherein when arranged on the tray 120, each of said fiber optic cassettes 30/40 is immediately adjacent at least one other selected fiber optic cassette 30/40 (Figs 7-10).

Re. Claim 10, Sedor et al discloses said set of cassettes 30/40 comprises cassettes comprising widths of one, two, three, four and six standard width units (i.e. cassette 40 of Figs 9-10 has a width of two standard width units; second cassette 30 of Figs 7-8 has a width of three standard width units) (Figs 7-10; col. 4 lines 19-35; col. 5 lines 39-47).

Re. Claim 11, Sedor et al discloses said selected cassettes all comprise the same width, for example Figures 7 and 8 show the tray filled with cassettes 30 while Figures 9-10 show the tray filled with cassettes 40.

Re. Claim 12, Sedor et al discloses said selected cassettes comprise a first cassette having a first width and a second cassette having a second width different from

said first width, for example when a tray 120 is rearranged to accommodate cassettes having a different size from those previously installed on the tray (col. 5 lines 35-47).

Re. Claim 13, Sedor et al discloses the width of the front edge is substantially evenly divisible by a maximum of twelve (12) of said standard width units (Figs 7-10; col. 5 lines 35-51).

Re. Claim 14, Sedor et al discloses said selected cassettes further comprise a third cassette 20 comprising a third width different from said first width and said second width (Figs 11-12; col. 4 lines 19-31; col. 5 lines 48-51).

Claim Rejections - 35 USC § 103

In the event the determination of the status of the application as subject to AIA 35 U.S.C. 102 and 103 (or as subject to pre-AIA 35 U.S.C. 102 and 103) is incorrect, any correction of the statutory basis for the rejection will not be considered a new ground of rejection if the prior art relied upon, and the rationale supporting the rejection, would be the same under either status.

The following is a quotation of 35 U.S.C. 103 which forms the basis for all obviousness rejections set forth in this Office action:

> A patent for a claimed invention may not be obtained, notwithstanding that the claimed invention is not identically disclosed as set forth in section 102, if the differences between the claimed invention and the prior art are such that the claimed invention as a whole would have been obvious before the effective filing date of the claimed invention to a person having ordinary skill in the art to which the claimed invention pertains. Patentability shall not be negated by the manner in which the invention was made.

The factual inquiries set forth in *Graham v. John Deere Co.*, 383 U.S. 1, 148 USPQ 459 (1966), that are applied for establishing a background for determining obviousness under 35 U.S.C. 103 are summarized as follows:

1. Determining the scope and contents of the prior art.

2. Ascertaining the differences between the prior art and the claims at issue.

3. Resolving the level of ordinary skill in the pertinent art.

4. Considering objective evidence present in the application indicating obviousness or nonobviousness.

Claims 6 and 7 is/are rejected under 35 U.S.C. 103 as being unpatentable over Sedor et al (US 10,215,944 B2) and Nelson et al (US 4,792,203).

Re. Claims 6 and 7, Sedor et al discloses the modular fiber optic cassette system as discussed above. Additionally, Sedor et al discloses a modular fiber optic cassette 30/40 for releasably securing to a tray 120, comprising:

an elongate rectangular optic fiber receiving housing (Figs 7-10; col. 4 lines 19-35);

a plurality of optic plug receiving receptacles arranged in a row along a front of said housing (Figs 7-10; col. 4 lines 23-26);

a multi fiber connector receiving receptacle on a rear thereof (Figs 7-10; col. 4 lines 23-26);

a plurality of optic fibers interconnecting a respective one of said optic plug receiving receptacles with said multi fiber connector receiving receptacle (col. 1 lines 21-23; col. 4 lines 23-26); and

a fastener 180 secured to an underside of said housing (i.e. an outer bottom edge of the housing slides and is retained on a portion of the fastener 180 (Figs 6B and 26A-26B; col. 7 lines 1-29).

In Sedor et al, the fastener 180 is a rail that is removeably coupled to the tray 120, specifically protrusions on the rail mate with holes on the tray (Figs 5, 6B, 7-10,

and 13A-13C; col. 5 lines 23-67; col. 6 lines 1-4). Sedor et al does not disclose alternative coupling means, such as magnetic coupling, between the fastener 180 and the tray 120. That is to say, Sedor et al does not disclose the tray being fabricated from a *ferrous metal* and the fastener comprising a *magnet*.

The use of a magnetic coupling arrangement for attaching a magnetic rail to a metallic tray surface is well known in the optical arts, as seen by Nelson et al. Nelson et al discloses a magnetic rail 60/62 for coupling to a ferrous metal tray 24 (Fig 6; col. 5 lines 24-35).

It would have been obvious to one of ordinary skill in the art to utilize a metal tray and a fastener comprising a magnet in the system of Sedor et al, since the same is a well-known arrangement of the art as evidences by Nelson et al, and is capable of achieving the attachment/detachment/reattachment nature of the fastener as desired by Sedor et al.

The claim would have been obvious because the substitution of one known element for another (i.e. the substitution of magnetized fastening means for protrusion/aperture fastener means) would have yielded predictable results to one of ordinary skill in the art at the time of the invention. *KSR International Co. v. Teleflex Inc.*, 550 USPQ2d 1385 (2007).

Claim 8 is/are rejected under 35 U.S.C. 103 as being unpatentable over Sedor et al (US 10,215,944 B2) and Giraud et al (US 2016/0062050 A1).

Re. Claim 8, Sedor et al discloses the modular fiber optic cassette system of as discussed above.

However, Sedor et al does not disclose the system as further comprising *at least one elongate cable management bracket comprising a cable management loop and a fastener for removeably securing said at least one bracket to said tray, said bracket having a bracket width of one of said standard width units and further wherein when installed on said tray adjacent an installed one of said cassettes, said cable management loop is positioned in front of and to a side of said plurality of optic plug receiving receptacles of said installed cassette*.

Giraud et al discloses a modular fiber optic cassette system comprising a case 300 (Fig 3A; [0060]) for retaining at least one slideable tray 100 (Figs 2A and 2B; [0056]-[0057]), the tray 100 comprising a plurality of cassettes 10 (Figs 1A, 2A-2B, and [0053]) and at least one elongate cable management bracket 400 (Figs 6-7; [0066]) attached thereto, the cable management bracket 400 comprising a cable loop and a fastener 422 for removeably securing said at least one bracket 400 to said tray 100 (Figs 6-7; [0067]), said bracket 400 having a bracket width of one of said standard width units ([0066]) and further wherein when installed on said tray adjacent an installed one of said cassettes, said cable loop is positioned in front of and to a side of said plurality of optic plug receiving receptacles of said installed cassette (Fig 7).

It would have been obvious to one of ordinary skill at the time the invention was effectively filed to include the cable management bracket of Giraud et al in the system of Sedor et al, since Giraud et al discloses the cable management bracket provides the network operator flexibility in the optical network to make moves, adds, and changes to transmission protocol as desired while maintaining a neat and orderly cable deployment and routing for the data center (Giraud et al: [0065]).

While Giraud et al discloses a cable loop is formed at the forward end of the bracket 400 (i.e. cable looped from adapter 418 through cut-out 411; Fig 6-7; [0066]-[0067]), Giraud et al fails to disclose *a cable management loop* to support said cable loop.

The use of management loops to support a looped length of optical cable is well known in the art, and commonly used to impact structural stability of the cable loop, thereby minimizing damage to the cable. The claimed cable management loop would have been obvious to one of ordinary skill for the purpose of minimizing damage to the optical cable of Giraud et al. "A person of ordinary skill is also a person of ordinary creativity, not an automaton" – '[w]hen there is a design need or market pressure to solve a problem and there are a finite number of identified, predictable solutions, a person of ordinary skill has good reason to pursue the known options within his or her technical grasp. If this leads to the anticipated success, it is likely the product not of innovation but of ordinary skill and common sense." *KSR International Co. v. Teleflex Inc.*, 550 USPQ2d 1385 (2007).

Allowable Subject Matter

Claims 17 and 18 are objected to as being dependent upon a rejected base claim, but would be allowable if rewritten in independent form including all of the limitations of the base claim and any intervening claims.

Re. Claims 17 and 18, the prior art does not disclose or reasonably suggest the cassette and method as recited the claims, wherein when arranged on the tray, each of said selected fiber optic cassettes *touches at least one other immediately adjacent selected fiber optic cassette*, in combination with the remaining features of the claims

Claims 15 and 16 are allowed.

The following is a statement of reasons for the indication of allowable subject matter: The prior art fails to disclose or reasonably suggest the claimed invention, specifically comprising *a pair of stabilizing bosses on said underside of said housing, each of said bosses on opposite sides of the magnet, wherein when said cassette is placed on said tray, each of said bosses engages a respective one of said spaced slots*, in combination with the remaining features of the claims.

The most applicable prior art, Sedor et al, discussed above, fails to disclose or reasonably suggest the claimed invention, specifically those portions *highlighted* above in combination with the remaining features of the claims.

Conclusion

The prior art made of record and not relied upon is considered pertinent to applicant's disclosure.

Any inquiry concerning this communication or earlier communications from the examiner should be directed to R. PEACE whose telephone number is (571)272-8580. The examiner can normally be reached on 9-5 pm.

Examiner interviews are available via telephone, in-person, and video conferencing using a USPTO supplied web-based collaboration tool. To schedule an interview, applicant is encouraged to use the USPTO Automated Interview Request (AIR) at http://www.uspto.gov/interviewpractice.

If attempts to reach the examiner by telephone are unsuccessful, the examiner's supervisor, Uyen-Chau Le can be reached on (571) 272-2397. The fax phone number for the organization where this application or proceeding is assigned is 571-273-8300.

Information regarding the status of an application may be obtained from the Patent Application Information Retrieval (PAIR) system. Status information for published applications may be obtained from either Private PAIR or Public PAIR. Status information for unpublished applications is available through Private PAIR only. For more information about the PAIR system, see http://pair-direct.uspto.gov. Should you have questions on access to the Private PAIR system, contact the Electronic Business Center (EBC) at 866-217-9197 (toll-free). If you would like assistance from a USPTO Customer Service Representative or access to the automated information system, call 800-786-9199 (IN USA OR CANADA) or 571-272-1000.

/RHONDA S PEACE/
Primary Examiner, Art Unit 2874
12/17/19

Notice of References Cited	Application/Control No. 16/143,831	Applicant(s)/Patent Under Reexamination PILON, VINCENT	
	Examiner R. PEACE	Art Unit 2874	Page 1 of 1

U.S. PATENT DOCUMENTS

*		Document Number Country Code-Number-Kind Code	Date MM-YYYY	Name	CPC Classification	US Classification
*	A	US-10281672-B1	05-2019	Mullsteff; David M.	G02B6/4452	1/1
*	B	US-20020131730-A1	09-2002	Keeble, Daniel John	G02B6/4201	385/92
*	C	US-20070131628-A1	06-2007	Mimlitch; Robert H. III	A47B47/024	211/26
*	D	US-20160033732-A1	02-2016	Giraud; William Julius McPhil	G02B6/4452	385/135
*	E	US-7331722-B2	02-2008	Tan; Chee Siong	G02B6/12026	385/135
*	F	US-7509015-B2	03-2009	Murano; Adam	G02B6/4453	135/134
*	G	US-8913866-B2	12-2014	Cote; Monique L.	G02B6/4453	385/135
*	H	US-9008485-B2	04-2015	Ramirez; Erika Guadalupe Chapa	G02B6/4452	361/825
*	I	US-9075216-B2	07-2015	Cote; Monique L.	G02B6/4452	1/1
	J					
	K					
	L					
	M					

FOREIGN PATENT DOCUMENTS

*		Document Number Country Code-Number-Kind Code	Date MM-YYYY	Country	Name	CPC Classification
	N					
	O					
	P					
	Q					
	R					
	S					
	T					

NON-PATENT DOCUMENTS

*		Include as applicable: Author, Title Date, Publisher, Edition or Volume, Pertinent Pages)
	U	
	V	
	W	
	X	

*A copy of this reference is not being furnished with this Office action. (See MPEP § 707.05(a).)
Dates in MM-YYYY format are publication dates. Classifications may be US or foreign.

Search Notes	Application/Control No.	Applicant(s)/Patent Under Reexamination
	16/143,831	PILON, VINCENT
	Examiner	**Art Unit**
	R. PEACE	2874

CPC - Searched*		
Symbol	**Date**	**Examiner**
G02B 6/4455	04/23/2019	RSP
G02B 6/4453-4455 (with text limiting)	12/17/2019	RSP

CPC Combination Sets - Searched*		
Symbol	**Date**	**Examiner**

US Classification - Searched*			
Class	**Subclass**	**Date**	**Examiner**

* See search history printout included with this form or the SEARCH NOTES box below to determine the scope of the search.

Search Notes		
Search Notes	**Date**	**Examiner**
global dossier search	04/23/2019	RSP
inventor and assignee searches	04/23/2019	RSP
see attached EAST search history report	04/24/2019	RSP
see attached EAST search history report	08/07/2019	RSP
global dossier search	12/17/2019	RSP
see attached EAST search history report	12/17/2019	

/RHONDA S PEACE/ Primary Examiner, Art Unit 2874	

Search Notes	Application/Control No.	Applicant(s)/Patent Under Reexamination
	16/143,831	PILON, VINCENT
	Examiner	**Art Unit**
	R. PEACE	2874

Interference Search			
US Class/CPC Symbol	**US Subclass/CPC Group**	**Date**	**Examiner**
	interference search (USPAT and USPGPub databases)	12/17/2019	RSP

/RHONDA S PEACE/ Primary Examiner, Art Unit 2874	

EAST Search History

EAST Search History (Prior Art)

Ref #	Hits	Search Query	DBs	Default Operator	Plurals	Time Stamp
S1	218	G02B6/4455.cpc. and modular	US-PGPUB; USPAT; USOCR; FPRS; EPO; JPO; DERWENT; IBM_TDB	OR	ON	2019/04/23 18:55
S2	44	((("BELDEN") near3 ("CANADA") near3 ("INC"))).AS,AANM.	USPAT	OR	ON	2019/04/23 19:12
S3	15	((("PILON") near3 ("VINCENT"))).INV.	US-PGPUB; USPAT; USOCR; EPO; JPO; DERWENT	OR	ON	2019/04/23 19:13
S4	2814	G02B6/4455.cpc. not S1	US-PGPUB; USPAT; USOCR; FPRS; EPO; JPO; DERWENT; IBM_TDB	OR	ON	2019/04/23 19:55
S5	25	S4 and magnet$4	US-PGPUB; USPAT; USOCR; FPRS; EPO; JPO; DERWENT; IBM_TDB	OR	ON	2019/04/23 19:57
S6	2789	S4 not S5	US-PGPUB; USPAT; USOCR; FPRS; EPO; JPO; DERWENT; IBM_TDB	OR	ON	2019/04/23 20:02
S7	194	("20060018622" | "20080089656" | "20080175552" | "20090245743" | "20100051886" | "20100052346" | "20100054684" | "20100296791" | "20100310225" | "20100316334" | "20100322580" | "20100322581" | "20100322582" | "20100322583" | "20110268405" | "20110268406" | "20110268408" | "20110268410" | "20110268411" | "20110274402" | "20120114295" | "20130011105" | "20130028567" | "20130121657" | "20130148935" | "20130214662" | "20130251319" | "20130251326" | "20130287357" | "20140010511" | "20140079365" | "20160033732" |	US-PGPUB; USPAT; USOCR	OR	ON	2019/04/24 09:32

		"20160062050" | "20160062055" | "20160062058" | "20160062068" | "20160299308" | "2056219" | "2550339" | "3392543" | "3478535" | "4034572" | "4266853" | "4585303" | "4655521" | "4792203" | "4824196" | "4846565" | "4986762" | "5046811" | "5129030" | "5142606" | "5167001" | "5212761" | "5325455" | "5339379" | "5370541" | "5442726" | "5448670" | "5490229" | "5497444" | "5511144" | "5647043" | "5717810" | "5758003" | "5804765" | "5836786" | "5902155" | "5946440" | "5978540" | "6017238" | "6080011" | "6085003" | "6086415" | "6095852" | "6109978" | "6167183" | "6203130" | "6210216" | "6356697" | "6396992" | "6591051" | "6768860" | "6769551" | "6771861" | "6788846" | "6920274" | "6944389" | "6946600" | "6974438" | "7000784" | "7031588" | "7087840" | "7113687" | "7147383" | "7200314" | "7200316" | "7318321" | "7320507" | "7330629" | "7376321" | "7416347" | "7418182" | "7509015" | "7529458" | "7532799" | "7570861" | "7628644" | "7672561" | "7681187" | "7682187" | "7686518").PN. OR ("7689089" | "7722411" | "7729586" | "7744176" | "7756378" | "7756380" | "7760983" | "7826705" | "7854333" | "7856166" | "7876995" | "7887244" | "7889961" | "7903925" | "7945135" | "7945136" | "7962000" | "7974105" | "7979985" | "8014646" | "8038015" | "8038354" | "8061534" | "8075198" | "8075344" | "8121458" | "8135257" | "8154886" | "8179684" | "8184938" | "8203450" | "8254742" | "8280216" | "8285104" | "8290332" | "8290333" | "8297854" | "8301004" | "8326107" | "8331752" | "8403599" | "8411465" | "8418974" | "8433171" | "8437147" | "8437597" | "8452148" | "8452149" | "8472776" | "8520996" | "8538226" | "8559783" | "8565572" | "8625950" | "8625951" | "8705926" | "8712206" | "8746466" | "8867883" | "8879881" | "8934253" | "8938147" | "8953924" | "8965168" | "8992099" | "9008485" | "9020320" | "9075216" | "9075217" | "9116324" | "9140870" | "9170392" | "9213161" | "9213363" | "9279951" | "9690065" | "D628462" | "RE40375").PN. OR ("10215944").URPN.				
S8	4	G02B6/44$.cpc. and (magnet$4 near5 rail)	US-PGPUB; USPAT; USOCR; FPRS; EPO; JPO; DERWENT; IBM_TDB	OR	ON	2019/04/24 11:17
S9	12	G02B6/44$.cpc. and (magnet$4 near5 tray)	US-PGPUB; USPAT;	OR	ON	2019/04/24 11:18

			USOCR; FPRS; EPO; JPO; DERWENT; IBM_TDB			
S10	17	G02B6/$.cpc. and ((standard adj width) same (module or cassette))	US-PGPUB; USPAT; USOCR; FPRS; EPO; JPO; DERWENT; IBM_TDB	OR	ON	2019/08/07 13:36
S11	18	(US-20160062050-$ or US-20160062055-$ or US-20160062058-$ or US-20160062068-$ or US-20170192191-$ or US-20180003912-$ or US-20180100976-$ or US-20190004268-$ or US-20190101717-$ or US-20090290842-$ or US-20160033732-$).did. or (US-10215944-$ or US-10254497-$ or US-9841574-$ or US-4792203-$ or US-8554044-$ or US-4840449-$).did. or (EP-3404461-$).did.	US-PGPUB; USPAT; FPRS	OR	ON	2019/08/07 14:05
S12	194	("20060018622" | "20080089656" | "20080175552" | "20090245743" | "20100051886" | "20100052346" | "20100054684" | "20100296791" | "20100310225" | "20100316334" | "20100322580" | "20100322581" | "20100322582" | "20100322583" | "20110268405" | "20110268406" | "20110268408" | "20110268410" | "20110268411" | "20110274402" | "20120114295" | "20130011105" | "20130028567" | "20130121657" | "20130148935" | "20130214662" | "20130251319" | "20130251326" | "20130287357" | "20140010511" | "20140079365" | "20160033732" | "20160062050" | "20160062055" | "20160062058" | "20160062068" | "20160299308" | "2056219" | "2550339" | "3392543" | "3478535" | "4034572" | "4266853" | "4585303" | "4655521" | "4792203" | "4824196" | "4846565" | "4986762" | "5046811" | "5129030" | "5142606" | "5167001" | "5212761" | "5325455" | "5339379" | "5370541" | "5442726" | "5448670" | "5490229" | "5497444" | "5511144" | "5647043" | "5717810" | "5758003" | "5804765" | "5836786" | "5902155" | "5946440" | "5978540" | "6017238" | "6080011" | "6085003" | "6086415" | "6095852" | "6109978" | "6167183" | "6203130" | "6210216" | "6356697" | "6396992" | "6591051" | "6768860" | "6769551" | "6771861" | "6788846" | "6920274" | "6944389" | "6946600" | "6974438" | "7000784" | "7031588" | "7087840" | "7113687" | "7147383" | "7200314" | "7200316" | "7318321" | "7320507" | "7330629" | "7376321" | "7416347" | "7418182" | "7509015" | "7529458" |	US-PGPUB; USPAT; USOCR	OR	ON	2019/12/17 11:13

		"7532799" | "7570861" | "7628644" | "7672561" | "7681187" | "7682187" | "7686518").PN. OR ("7689089" | "7722411" | "7729586" | "7744176" | "7756378" | "7756380" | "7760983" | "7826705" | "7854333" | "7856166" | "7876995" | "7887244" | "7889961" | "7903925" | "7945135" | "7945136" | "7962000" | "7974105" | "7979985" | "8014646" | "8038015" | "8038354" | "8061534" | "8075198" | "8075344" | "8121458" | "8135257" | "8154886" | "8179684" | "8184938" | "8203450" | "8254742" | "8280216" | "8285104" | "8290332" | "8290333" | "8297854" | "8301004" | "8326107" | "8331752" | "8403599" | "8411465" | "8418974" | "8433171" | "8437147" | "8437597" | "8452148" | "8452149" | "8472776" | "8520996" | "8538226" | "8559783" | "8565572" | "8625950" | "8625951" | "8705926" | "8712206" | "8746466" | "8867883" | "8879881" | "8934253" | "8938147" | "8953924" | "8965168" | "8992099" | "9008485" | "9020320" | "9075216" | "9075217" | "9116324" | "9140870" | "9170392" | "9213161" | "9213363" | "9279951" | "9690065" | "D628462" | "RE40375").PN. OR ("10215944").URPN.				
S13	73	("8285104").URPN.	USPAT	OR	ON	2019/12/17 11:24
S14	1087	("0620013" | "20010010741" | "20010029125" | "20020010818" | "20020012353" | "20020014571" | "20020034290" | "20020037139" | "20020064364" | "20020131730" | "20020136519" | "20020141724" | "20020150372" | "20020172467" | "20020180163" | "20020181918" | "20020181922" | "20020191939" | "20020194596" | "20030002802" | "20030007743" | "20030007767" | "20030011855" | "20030021539" | "20030036748" | "20030051026" | "20030066998" | "20030086675" | "20030095753" | "20030147604" | "20030156552" | "20030174996" | "20030180004" | "20030180012" | "20030183413" | "20030199201" | "20030210882" | "20030223723" | "20030223725" | "20030235387" | "20040001717" | "20040013389" | "20040013390" | "20040022494" | "20040024934" | "20040067036" | "20040074852" | "20040086238" | "20040086252" | "20040120679" | "20040147159" | "20040151465" | "20040175090" | "20040192115" | "20040196841" | "20040208459" | "20040228598" | "20040240827" | "20040240882" | "20040264873" | "20050002633" | "20050008131" | "20050026497" | "20050036749" |	US-PGPUB; USPAT; USOCR	OR	ON	2019/12/17 11:25

"20050067358" | "20050069248" |
"20050074990" | "20050076149" |
"20050083959" | "20050107086" |
"20050111809" | "20050123261" |
"20050129379" | "20050175293" |
"20050178573" | "20050201073" |
"20050232566" | "20050233647" |
"20050254757" | "20050281526" |
"20050281527" | "20050285493" |
"20060007562" | "20060018448" |
"20060018622" | "20060034048" |
"20060039290" | "20060044774" |
"20060045458" | "20060072606" |
"20060077968" | "20060093303" |
"20060103270" | "20060110118").PN. OR
("20060127026" | "20060133736" |
"20060133759" | "20060147172" |
"20060153517" | "20060160377" |
"20060165365" | "20060165366" |
"20060191700" | "20060193590" |
"20060193591" | "20060198098" |
"20060204179" | "20060215980" |
"20060225912" | "20060228087" |
"20060269194" | "20060269206" |
"20060269208" | "20060275008" |
"20060275009" | "20060285812" |
"20070003204" | "20070025070" |
"20070031099" | "20070033629" |
"20070047894" | "20070058641" |
"20070086723" | "20070104447" |
"20070110373" | "20070127201" |
"20070131628" | "20070183732" |
"20070189692" | "20070196071" |
"20070221793" | "20070237484" |
"20070257159" | "20070266192" |
"20070274718" | "20080011514" |
"20080025683" | "20080031585" |
"20080063350" | "20080068788" |
"20080069511" | "20080069512" |
"20080078899" | "20080080826" |
"20080080827" | "20080080828" |
"20080085094" | "20080089656" |
"20080095502" | "20080095541" |
"20080100440" | "20080106871" |
"20080112681" | "20080118207" |
"20080121423" | "20080124039" |
"20080131068" | "20080145013" |
"20080152294" | "20080166094" |
"20080166131" | "20080175541" |
"20080175550" | "20080175551" |
"20080175552" | "20080193091" |
"20080205823" | "20080205843" |
"20080205844" | "20080212928" |
"20080219632" | "20080219634" |
"20080236858" | "20080247723" |
"20080267573" | "20080285934" |
"20080292261" | "20080296060" |
"20080298763" | "20080304803" |
"20080310810" | "20090010607" |
"20090016685" | "20090022470" |
"20090038845" | "20090060439" |
"20090060440").PN. OR ("20090067800" |
"20090074371" | "20090080849" |
"20090097813" | "20090110347" |

"20090121092" | "20090136194" |
"20090136195" | "20090136196" |
"20090146342" | "20090148117" |
"20090166404" | "20090169163" |
"20090175588" | "20090180749" |
"20090184221" | "20090185782" |
"20090191891" | "20090194647" |
"20090196563" | "20090202214" |
"20090207577" | "20090208178" |
"20090208210" | "20090212679" |
"20090214171" | "20090220200" |
"20090220204" | "20090226142" |
"20090238531" | "20090245743" |
"20090252472" | "20090257726" |
"20090257727" | "20090257754" |
"20090263096" | "20090263122" |
"20090267865" | "20090269016" |
"20090269018" | "20090269019" |
"20090274429" | "20090274430" |
"20090274432" | "20090290842" |
"20090290843" | "20090297111" |
"20090304342" | "20090324189" |
"20100003000" | "20100012671" |
"20100027953" | "20100054681" |
"20100054682" | "20100054683" |
"20100054684" | "20100054685" |
"20100054686" | "20100054687" |
"20100061691" | "20100061693" |
"20100074587" | "20100080517" |
"20100086267" | "20100086274" |
"20100111483" | "20100119201" |
"20100129035" | "20100142544" |
"20100142910" | "20100150518" |
"20100158467" | "20100166377" |
"20100178022" | "20100202740" |
"20100202745" | "20100202748" |
"20100220967" | "20100220968" |
"20100247051" | "20100266245" |
"20100278499" | "20100296790" |
"20100296791" | "20100310225" |
"20100310226" | "20100316334" |
"20100322554" | "20100322579" |
"20100322580" | "20100322581" |
"20100322582" | "20100322583").PN. OR
("20100329624" | "20110008004" |
"20110069931" | "20110073730" |
"20110085774" | "20110085776" |
"20110097053" | "20110097977" |
"20110129185" | "20110129186" |
"20110186532" | "20110192631" |
"20110211799" | "20110217014" |
"20110217016" | "20110222821" |
"20110249950" | "20110268404" |
"20110268405" | "20110268407" |
"20110268408" | "20110268413" |
"20110280537" | "20120025683" |
"20120051707" | "20120057838" |
"20120106899" | "20120183263" |
"20120183289" | "20120219263" |
"20120288244" | "20120288248" |
"20120301083" | "20130004136" |
"20130058616" | "20130077927" |
"20130214108" | "20130266282" |
"20130308916" | "20140003782" |

"20140010510" | "20140112628" |
"2528910" | "2614685" | "3081717" |
"3175873" | "3212192" | "3433886" |
"3494306" | "3545712" | "3568263" |
"3646244" | "3664514" | "3683238" |
"3701835" | "3880396" | "3906592" |
"3991960" | "4047797" | "4059872" |
"4119285" | "4148454" | "4239316" |
"4244638" | "4285486" | "4303296" |
"4354731" | "4457482" | "4525012" |
"4540222" | "4561615" | "4564163" |
"4597173" | "4611875" | "4635886" |
"4645292" | "4657340" | "4681288" |
"4702551" | "4711518" | "4736100" |
"4744629" | "4747020" | "4752110" |
"4753510" | "4787706" | "4792203" |
"4798432" | "4805979" | "4808774" |
"4824193" | "4824196" | "4826277" |
"4838643" | "4840449" | "4865280" |
"4898448" | "4900123" | "4911662" |
"4948220" | "4949376" | "4971421" |
"4986625" | "4988831" | "4991928" |
"4995688" | "5001602" | "5005941" |
"5017211" | "5023646" | "5024498").PN.
OR ("5028114" | "5037175" | "5048918" |
"5060897" | "5066149" | "5067784" |
"5071211" | "5071220" | "5073042" |
"5074635" | "5076688" | "5080459" |
"5100221" | "5104336" | "5125060" |
"5127082" | "5127851" | "5129030" |
"5129607" | "5133039" | "5138678" |
"5138688" | "5142598" | "5142607" |
"5150277" | "5152760" | "5153910" |
"5157749" | "5167001" | "5170452" |
"5189723" | "5199099" | "5204929" |
"5209572" | "5214735" | "5224186" |
"5230492" | "5231687" | "5231688" |
"5233674" | "5239609" | "5243679" |
"5253320" | "5260957" | "5261633" |
"5265187" | "5274729" | "5274731" |
"5278933" | "5280138" | "5285515" |
"5291570" | "5315679" | "5317663" |
"5323478" | "5323480" | "5329520" |
"5333193" | "5333221" | "5333222" |
"5337400" | "5339379" | "5347603" |
"5353367" | "5359688" | "5363466" |
"5363467" | "5366388" | "5367598" |
"5373421" | "5383051" | "5390272" |
"5398295" | "5398820" | "5399814" |
"5401193" | "5402515" | "5408557" |
"5412751" | "5416837" | "5418874" |
"5420956" | "5420958" | "5421532" |
"5438641" | "5442725" | "5442726" |
"5443232" | "5444804" | "5448015" |
"5450518" | "5458019" | "5471555" |
"5479505" | "5481634" | "5481939" |
"5490229" | "5497416" | "5497444" |
"5511144" | "5511798" | "5519804" |
"5530786" | "5535970" | "5538213" |
"5542015" | "5546495" | "5548641" |
"5553183" | "5553186" | "5563971" |
"5572617" | "5575680" | "5577151" |
"5590234" | "5595507" | "5596670" |
"5600020" | "5602954" | "5608606" |

"5613030" | "5617501" | "5638474" |
"5640476" | "5640482").PN. OR
("5647043" | "5647045" | "5650334" |
"5668910" | "5668911" | "5671273" |
"5689605" | "5689607" | "5692079" |
"5694511" | "5701380" | "5704573" |
"5708742" | "5708751" | "5710851" |
"5717810" | "5734776" | "5740300" |
"5742982" | "5751874" | "5751882" |
"5754724" | "5758003" | "5758004" |
"5761026" | "5765698" | "5769908" |
"5774612" | "5778122" | "5778130" |
"5781686" | "5788087" | "5790741" |
"5793920" | "5793921" | "5796908" |
"5806687" | "5823646" | "5825955" |
"5825961" | "5828807" | "5832162" |
"5835657" | "5835658" | "5862290" |
"5870519" | "5874733" | "5877565" |
"5880864" | "5881200" | "5883995" |
"5884003" | "5887095" | "5887106" |
"5892877" | "5894540" | "5901220" |
"5903693" | "5906342" | "5909298" |
"5913006" | "5914976" | "5915055" |
"5923804" | "5930425" | "5933557" |
"5940563" | "5943460" | "5945633" |
"5946440" | "5949946" | "5953962" |
"5956439" | "5956444" | "5956449" |
"5966492" | "5969294" | "5975769" |
"5978540" | "5980303" | "5987203" |
"5993071" | "5995700" | "5999393" |
"6001831" | "6009224" | "6009225" |
"6011831" | "6027252" | "6027352" |
"6041042" | "6044193" | "6049963" |
"6058235" | "6061492" | "6078661" |
"6079881" | "6088497" | "6118075" |
"6127627" | "6130983" | "6134370" |
"6141222" | "6149313" | "6149315" |
"6151432" | "6160946" | "6170784" |
"6172782" | "6175079" | "6181861" |
"6188687" | "6188825" | "6192180" |
"6200170" | "6201919" | "6201920" |
"6208796" | "6212324" | "6215938" |
"6216987" | "6227717" | "6229948" |
"6234683" | "6234685").PN. OR
("6236795" | "6240229" | "6243522" |
"6245998" | "6247851" | "6250816" |
"6259850" | "6263141" | "6265680" |
"6269212" | "6273532" | "6275641" |
"6278829" | "6278831" | "6289618" |
"6292614" | "6301424" | "6305848" |
"6307997" | "6318824" | "6321017" |
"6322279" | "6324575" | "6325549" |
"6327059" | "6343313" | "6344615" |
"6347888" | "6353696" | "6353697" |
"6357712" | "6359228" | "6363198" |
"6363200" | "6370309" | "6371419" |
"6375129" | "6377218" | "6379052" |
"6381642" | "6385374" | "6385381" |
"6389214" | "6397166" | "6398149" |
"6406314" | "6410850" | "6411767" |
"6412986" | "6418262" | "6419519" |
"6424781" | "6425694" | "6427045" |
"6431762" | "6434313" | "6438310" |
"6452925" | "6456773" | "6464402" |

"6466724" | "6469905" | "6478472" |
"6480487" | "6480660" | "6483977" |
"6484958" | "6494550" | "6496640" |
"6504988" | "6507980" | "6510274" |
"6532332" | "6533472" | "6535397" |
"6535682" | "6539147" | "6539160" |
"6542688" | "6544075" | "6550977" |
"6554485" | "6560334" | "6567601" |
"6568542" | "6571048" | "6577595" |
"6577801" | "6579014" | "6584267" |
"6585423" | "6587630" | "6588938" |
"6591051" | "6591053" | "6592266" |
"6597670" | "6600106" | "6600866" |
"6601997" | "6612515" | "6612874" |
"6614978" | "6614980" | "6621975" |
"6622873" | "6624389" | "6625374" |
"6625375" | "6631237" | "6640042" |
"6644863" | "6647197" | "6648520" |
"6654536" | "6668127" | "6669149" |
"6677520" | "6679604" | "6684005" |
"6687450" | "6693552" | "6695620" |
"6701056" | "6710366").PN. OR
("6715619" | "6719149" | "6721482" |
"6741784" | "6741785" | "6746037" |
"6748154" | "6748155" | "6758600" |
"6768860" | "6771861" | "6773297" |
"6778525" | "6778752" | "6786647" |
"6786743" | "6786896" | "6788871" |
"6792190" | "6798751" | "6804447" |
"6810194" | "6813412" | "6816660" |
"6818834" | "6819856" | "6819857" |
"6822874" | "6826174" | "6826346" |
"6826631" | "6830489" | "6839428" |
"6839438" | "6840815" | "6845207" |
"6847614" | "6848862" | "6850685" |
"6853637" | "6854894" | "6856334" |
"6856505" | "6863444" | "6865331" |
"6865334" | "6866541" | "6868216" |
"6869227" | "6870734" | "6870997" |
"6879545" | "6915058" | "6920273" |
"6920274" | "6923406" | "6925241" |
"6934451" | "6934456" | "6935598" |
"6937807" | "6944383" | "6944389" |
"6945701" | "6952530" | "6963690" |
"6968107" | "6968111" | "6985665" |
"6993237" | "7000784" | "7005582" |
"7006748" | "7007296" | "7025275" |
"7027695" | "7027706" | "7031588" |
"7035510" | "7038137" | "7048447" |
"7054513" | "7066748" | "7068907" |
"7070459" | "7077710" | "7079744" |
"7090406" | "7090407" | "7094095" |
"7097047" | "7101093" | "7102884" |
"7103255" | "7110654" | "7111990" |
"7113679" | "7113686" | "7113687" |
"7116491" | "7116883" | "7118281" |
"7118405" | "7120347" | "7120348" |
"7120349" | "7127143" | "7128471" |
"7136555" | "7139462" | "7140903" |
"7147383" | "7170466" | "7171099" |
"7171121" | "7181142" | "7186134" |
"7193783" | "7194181" | "7195521" |
"7200314" | "7200316" | "7201595" |
"7217040" | "7218526").PN. OR

		("7220065" | "7221832" | "7228036" | "7228047" | "7231125" | "7234878" | "7236677" | "7239789" | "7245809" | "7259325" | "7266283" | "7270485" | "7272291" | "7274852" | "7284785" | "7287913" | "7289731" | "7292769" | "7298950" | "7300216" | "7300308" | "7302149" | "7302153" | "7302154" | "7308184" | "7310471" | "7310472" | "7315681" | "7325975" | "7330624" | "7330625" | "7330626" | "7330629" | "7331718" | "7340145" | "7349615" | "7352946" | "7352947" | "7373071" | "7376321" | "7376323" | "7391952" | "7397996" | "7400813" | "7404736" | "7409137" | "7414198" | "7417188" | "7418182" | "7418184" | "7421182" | "7428363" | "7435090" | "7437049" | "7439453" | "7454113" | "7460757" | "7460758" | "7461981" | "7462779" | "7463810" | "7463811" | "7469090" | "7471867" | "7474828" | "7477824" | "7477826" | "7480438" | "7488205" | "7493002" | "7496269" | "7499622" | "7499623" | "7507111" | "7509015" | "7509016" | "7510421" | "7522804" | "7523898" | "7526171" | "7526172" | "7526174" | "7529458" | "7534958" | "7536075" | "7540666" | "7542645" | "7544085" | "7552899" | "7555193" | "7558458" | "7565051" | "7567744" | "7570860" | "7570861" | "7577331" | "7596293" | "7603020" | "7607938" | "7609967" | "7613377" | "7614903" | "7620272" | "7620287" | "7641398" | "7668430" | "7668433" | "7672561" | "7676135" | "7689079" | "7694926" | "7697811" | "7706294" | "7715125" | "7715683" | "7734138" | "7740409" | "7743495" | "7751674" | "7751675" | "7756371" | "7756382" | "7760984" | "7764858" | "7764859").PN. OR ("7769266" | "7805044" | "7809232" | "7809235" | "7811136" | "7822310" | "7837495" | "7850372" | "7853112" | "7856166" | "7862369" | "7869685" | "7876580" | "7899298" | "7914332" | "7942589" | "7945135" | "7945136" | "7945138" | "7970250" | "7991252" | "8009959" | "8014171" | "8014646" | "8020813" | "8059932" | "8093499" | "8107785" | "8131126" | "8184938" | "8206043" | "8206058" | "8220881" | "8226305" | "8249410" | "8251591" | "8270798" | "8280216" | "8285104" | "8301004" | "8331752" | "8353494" | "8369679" | "8391666" | "8472773" | "8491331" | "8528872" | "8537477" | "8538226" | "8559783" | "D330368" | "D448005" | "D466087" | "Entry 3 of 73 File:" | "RE34955" | "RE37489" | "RE38311").PN. OR ("8913866").URPN.				
S15	74	("20030223723" | "4900123" | "5915802" | "6282360" | "6356697" | "6758600" |	US-PGPUB; USPAT;	OR	ON	2019/12/17 11:46

		"6869227" | "6925241" | "7205481" | "7333706").PN. OR ("7509015").URPN.	USOCR			
L18	5	17 and magnet$4	US-PGPUB; USPAT; USOCR; FPRS; EPO; JPO; DERWENT; IBM_TDB	OR	ON	2019/12/17 15:54
L17	24	(US-20160062050-$ or US-20160062055-$ or US-20160062058-$ or US-20160062068-$ or US-20170192191-$ or US-20180003912-$ or US-20180100976-$ or US-20190004268-$ or US-20190101717-$ or US-20090290842-$ or US-20160033732-$ or US-20020131730-$ or US-20070131628-$).did. or (US-10215944-$ or US-10254497-$ or US-9841574-$ or US-4792203-$ or US-8554044-$ or US-4840449-$ or US-8913866-$ or US-7509015-$ or US-9075216-$ or US-9008485-$).did. or (EP-3404461-$).did.	US-PGPUB; USPAT; FPRS	OR	ON	2019/12/17 15:54
L19	1494	G02B6/$.cpc. and (magnet$5 same (cassette or module))	US-PGPUB; USPAT; USOCR; FPRS; EPO; JPO; DERWENT; IBM_TDB	OR	ON	2019/12/17 15:56
L21	70	G02B6/4453-4455.cpc. and (magnet$5)	US-PGPUB; USPAT; USOCR; FPRS; EPO; JPO; DERWENT; IBM_TDB	OR	ON	2019/12/17 16:36

EAST Search History (Interference)

Ref #	Hits	Search Query	DBs	Default Operator	Plurals	Time Stamp
L20	72	((cassette or module) and metal$4 and optic$4 and (fiber or fibre) and magnet$4 and (tray or housing or drawer or slide)).clm.	US-PGPUB; USPAT	OR	ON	2019/12/17 16:33

12/17/2019 4:41:03 PM
C:\Users\rpeace\Documents\EAST\Workspaces\16143831.wsp

PTO/SB/06 (09-11)
Approved for use through 1/31/2014. OMB 0651-0032
U.S. Patent and Trademark Office; U.S. DEPARTMENT OF COMMERCE
Under the Paperwork Reduction Act of 1995, no persons are required to respond to a collection of information unless it displays a valid OMB control number.

PATENT APPLICATION FEE DETERMINATION RECORD Substitute for Form PTO-875	Application or Docket Number 16/143,831	Filing Date 09/27/2018	☐ To be Mailed

ENTITY: ☑ LARGE ☐ SMALL ☐ MICRO

APPLICATION AS FILED - PART I

FOR	(Column 1) NUMBER FILED	(Column 2) NUMBER EXTRA		RATE ($)	FEE ($)
☐ BASIC FEE (37 CFR 1.16(a), (b), or (c))	N/A	N/A		N/A	
☐ SEARCH FEE (37 CFR 1.16(k), (i), or (m))	N/A	N/A		N/A	
☐ EXAMINATION FEE (37 CFR 1.16(o), (p), or (q))	N/A	N/A		N/A	
TOTAL CLAIMS (37 CFR 1.16(i))	minus 20 =	*		x $100 =	
INDEPENDENT CLAIMS (37 CFR 1.16(h))	minus 3 =	*		x $460 =	
☐ APPLICATION SIZE FEE (37 CFR 1.16(s))	If the specification and drawings exceed 100 sheets of paper, the application size fee due is $310 ($155 for small entity) for each additional 50 sheets or fraction thereof. See 35 U.S.C. 41(a)(1)(G) and 37 CFR 1.16(s).				
☐ MULTIPLE DEPENDENT CLAIM PRESENT (37 CFR 1.16(j))					
* If the difference in column 1 is less than zero, enter "0" in column 2.				TOTAL	

APPLICATION AS AMENDED - PART II

AMENDMENT	04/20/2020	(Column 1) CLAIMS REMAINING AFTER AMENDMENT		(Column 2) HIGHEST NUMBER PREVIOUSLY PAID FOR	(Column 3) PRESENT EXTRA		RATE ($)	ADDITIONAL FEE ($)
	Total (37 CFR 1.16(i))	* 15	Minus	** 20	= 0		x $100 =	0
	Independent (37 CFR 1.16(h))	* 3	Minus	*** 3	= 0		x $460 =	0
	☐ Application Size Fee (37 CFR 1.16(s))							
	☐ FIRST PRESENTATION OF MULTIPLE DEPENDENT CLAIM (37 CFR 1.16(j))							
							TOTAL ADD'L FEE	0

AMENDMENT		(Column 1) CLAIMS REMAINING AFTER AMENDMENT		(Column 2) HIGHEST NUMBER PREVIOUSLY PAID FOR	(Column 3) PRESENT EXTRA		RATE ($)	ADDITIONAL FEE ($)
	Total (37 CFR 1.16(i))	*	Minus	**	=		x $0 =	
	Independent (37 CFR 1.16(h))	*	Minus	***	=		x $0 =	
	☐ Application Size Fee (37 CFR 1.16(s))							
	☐ FIRST PRESENTATION OF MULTIPLE DEPENDENT CLAIM (37 CFR 1.16(j))							
							TOTAL ADD'L FEE	

* If the entry in column 1 is less than the entry in column 2, write "0" in column 3.	SLIE
** If the "Highest Number Previously Paid For" IN THIS SPACE is less than 20, enter "20".	/BRENDA GRAY/
*** If the "Highest Number Previously Paid For" IN THIS SPACE is less than 3, enter "3".	
The "Highest Number Previously Paid For" (Total or Independent) is the highest number found in the appropriate box in column 1.	

This collection of information is required by 37 CFR 1.16. The information is required to obtain or retain a benefit by the public which is to file (and by the USPTO to process) an application. Confidentiality is governed by 35 U.S.C. 122 and 37 CFR 1.14. This collection is estimated to take 12 minutes to complete, including gathering, preparing, and submitting the completed application form to the USPTO. Time will vary depending upon the individual case. Any comments on the amount of time you require to complete this form and/or suggestions for reducing this burden, should be sent to the Chief Information Officer, U.S. Patent and Trademark Office, U.S. Department of Commerce, P.O. Box 1450, Alexandria, VA 22313-1450. DO NOT SEND FEES OR COMPLETED FORMS TO THIS ADDRESS. **SEND TO: Commissioner for Patents, P.O. Box 1450, Alexandria, VA 22313-1450.**

If you need assistance in completing the form, call 1-800-PTO-9199 and select option 2.

IN THE UNITED STATES PATENT AND TRADEMARK OFFICE

Applicant:	Belden Canada Inc.	Customer Number:	25545
Docket No.:	771/13569.451	Confirmation No.:	4901
Serial No.:	16/143,831	Group Art:	2874
Filing Date:	September 27, 2018	Examiner:	Rhonda S. Peace
Title:	MODULAR FIBER OPTIC CASSETTE, SYSTEM AND METHOD		

Mail Stop Amendment
Commissioner for Patents
P.O. Box 1450
Alexandria, VA 22313-1450

RESPONSE TO OFFICIAL ACTION

Sir:

In response to the Official Action dated December 20, 2019 in connection with the above-identified patent application, please consider the following amendments and remarks. Response to the Office Action was originally due on March 20, 2020. Applicant submits below a Petition for Extension of Time for one (1) month, to and including April 20, 2020, accompanied by the required fee.

Amendments to the Claims are reflected in the listing of claims which begins on page 2 of this paper.

Remarks/Arguments begin on page 6 of this paper.

AMENDMENTS TO THE CLAIMS:

This listing of claims will replace prior versions and listings of claims in the application:

Claims have been amended as follows: Underlines indicate insertions and ~~strikethrough~~ indicate deletions.

Listing of claims:

1. (currently amended) A modular fiber optic cassette system, the system comprising:

a case comprising a top and a bottom wall and two opposed side walls, each of said sidewalls attached between respective side edges of said top and bottom wall, said walls together defining a tray receiving space there between and a forward edge of each said wall together defining an opening to said tray receiving space;

at least one tray slideably received within said tray receiving space for movement between a stored position wherein said tray is completely inside said tray receiving space and an accessible position wherein a front end of said tray is in front of said opening and outside of said tray receiving space;

a set of fiber optic cassettes, a selected plurality of the cassettes arrangeable side by side along said tray front end wherein each of said cassettes comprises a plurality of optic plug receiving receptacles arranged side by side in a row along a front thereof, a first of said set of cassettes comprising a first cassette width of one of one, two, three, four and six standard width units and a second of said cassettes comprising a second cassette width different from said first cassette width and one of one, two, three, four and six standard width units; and

a fastener for removeably securing each of said cassettes to said tray

wherein when arranged on said at least one tray each of said fiber optic cassettes ~~is~~

~~immediately adjacent~~ touches at least one other fiber optic cassette.

2. (original) The modular fiber optic cassette system of Claim 1, wherein said tray has a width dimensioned to receive at least twelve standard width units side by side.

3. (original) The modular fiber optic cassette system of Claim 1, wherein each of said cassettes comprises a multi fiber connector receiving receptacle arranged on a rear thereof and a plurality of optic fibers, one of said optic fibers interconnecting a respective one of said optic plug receiving receptacles with said multi fiber connector receiving receptacle.

4. (original) The modular fiber optic cassette system of Claim 1, wherein each of said cassettes comprises four fiber optic plug receiving receptacles arranged side by side in a row along a front thereof for each standard width unit.

5. (original) The modular fiber optic cassette system of Claim 1, wherein said system is for mounting in a rack and further comprising a pair of mounting brackets, one of said brackets attached to each of said sidewalls on either side of an outside of said case, said mounting brackets for securing said case to the rack.

6. (cancelled)

7. (original) The modular fiber optic cassette system of Claim 1, wherein said tray is manufactured from a ferrous metal and said fastener comprises a magnet.

8. (original) The modular fiber optic cassette system of Claim 1, further comprising at least one elongate cable management bracket comprising a cable management loop and a fastener for removeably securing said at least one bracket to said tray, said bracket having a bracket width of one of said standard width units and further wherein when installed on said tray adjacent an installed one of said cassettes, said cable management loop is positioned

in front of and to a side of said plurality of optic plug receiving receptacles of said installed cassette.

9. (currently amended) A method for organising a tray comprising a front edge in a fiber optic interconnect system, the method comprising:

defining a standard width unit wherein a width of the front edge is substantially evenly divisible by said standard width unit;

selecting a plurality of cassettes for installation on the tray from a set of cassettes having a plurality of different widths, wherein each of said different widths is evenly divisible by said standard width unit; and

releasably securing said selected cassettes along the front edge of the tray;

wherein when arranged on the tray each of said selected cassettes i~~s immediately adjacent~~ touches at least one other selected cassette.

10. (original) The method for organising a tray of Claim 9, wherein said set of cassettes comprises cassettes comprising widths of one, two, three, four and six standard width units.

11. (original) The method for organising a tray of Claim 9, wherein said selected cassettes all comprise the same width.

12. (original) The method for organising a tray of Claim 9, wherein said selected cassettes comprise a first cassette having a first width and a second cassette having a second width different from said first width.

13. (original) The method for organising a tray of Claim 9, wherein the width of the front edge is substantially evenly divisible by a maximum of twelve (12) of said standard width units.

14. (original) The method for organising a tray of Claim 12, wherein said selected cassettes further comprise a third cassette comprising a third width different from said first width and said second width.

15. (previously presented) A modular fiber optic cassette for releasably securing to a tray fabricated from a ferrous metal and comprising a plurality of spaced slots, the cassette comprising:

an elongate rectangular optic fiber receiving housing;

a plurality of optic plug receiving receptacles arranged in a row along a front of said housing;

a multi fiber connector receiving receptacle on a rear thereof;

a plurality of optic fibers interconnecting a respective one of said optic plug receiving receptacles with said multi fiber connector receiving receptacle;

a magnet secured to an underside of said housing; and

a pair of stabilizing bosses on said underside of said housing, each of said bosses on opposite sides of said magnet;

wherein when said cassette is placed on said tray, each of said bosses engages a respective one of said spaced slots.

16. (previously presented) The modular fiber optic cassette of Claim 15, wherein the tray has a tray width substantially evenly divisible by a plurality of standard width units, wherein a plurality of the modular cassettes are arrangeable side by side along a front end of the tray and further wherein said cassette comprise a cassette width of one of one, two, three, four and six standard width units.

17. (cancelled)

18. (cancelled)

REMARKS

Claims 1 to 18 remain in the case. Claims 1 and 9 have been amended and Claims 6, 17 and 18 have been cancelled added having regard to the official action and to better reflect what Applicant believes to be an invention. In particular, Claim 1 has been amended to claim a modular fiber optic cassette system comprising *inter alia* wherein when arranged on at least one tray each of the fiber optic cassettes touches at least one other fiber optic cassette. A similar amendment has been introduced into Claim 9.

Reconsideration in view of the following remarks and entry of the foregoing amendments is respectfully requested.

REJECTION UNDER 35 U.S.C. § 102(a)

Claims 1-5 and 9-14 have been rejected as being anticipated by Sedor et al. ("US 10,215,944"). Applicant respectfully traverse the rejection as follows.

Claim 1 claims a modular fiber optic cassette system comprising *inter alia* a set of fiber optic cassettes wherein when arranged on at least one tray each of the fiber optic cassettes touches at least one other fiber optic cassette.

Sedor et al. discloses modular trays comprising different sized fiber optic module. Like removeable rails are provided which may be removeably secured to a tray body in one of a number of positions so as to accommodate the different sizes of modules. Each of these rails are positioned between adjacent ones of the modules. As such, it cannot be said that when arranged on the tray each fiber optic cassette touches at least one other fiber topic cassette as now claimed at Claim 1.

In view of the above, Applicant submits that Sedor et al. does not anticipate Claim 1 of the present application. A similar argument applies to Claim 9 which Applicant submits is also not anticipated by Sedro et al.

REJECTION UNDER 35 U.S.C. § 103

Claims 6 and 7 have been rejected as being unpatentable over Sedor et al. and Nelson et al. ("US 4,792,203"). Claim 6 has been cancelled. Applicant submits that Claim 1 as amended, and from which Claims 7 depends, overcomes this rejection.

As the remaining claims all depend from an allowable claim, Applicant submits that they, too, are allowable claims.

The rejections of the original claims are believed to have been overcome by the present remarks and the introduction of new claims. From the foregoing, further and favorable action in the form of a Notice of Allowance is believed to be next in order, and such an action is earnestly solicited.

Respectfully submitted,

Date: April 20, 2019

/Hugh Mansfield/
Hugh Mansfield
Registration No.: 55757
Agent of Applicant

LAVERY, DE BILLY LLP
1 Place Ville Marie, Suite 4000
Montreal, Quebec, Canada H3B 4M4
Email: hmansfield@lavery.ca
Tel.: (514) 397-5170
Fax: (514) 397-4382

PETITION FOR ONE-MONTH EXTENSION OF TIME

Applicants hereby request that the period for responding to the Office Action dated December 20, 2019, and originally set to expire on March 20, 2020, be extended by one (1) month, so as to expire on April 20, 2020.

The Commissioner is authorized to charge the amount of $200, to cover the 1-month extension herein requested, to Deposit Account No. 07-1742. The Commissioner is further authorized to charge any deficiencies or to credit any overcharges to this same Deposit Account number.

Favorable action on this request for extension of time is courteously solicited.

Respectfully submitted,

Date: April 20, 2020

/Hugh Mansfield/
Hugh Mansfield
Registration No.: 55757
Agent of Applicant

LAVERY, DE BILLY LLP
1 Place Ville Marie, Suite 4000
Montreal, Quebec, Canada H3B 4M4
Email: hmansfield@lavery.ca
Tel.: (514) 397-5170
Fax: (514) 397-4382

Electronic Patent Application Fee Transmittal

Application Number:	16143831
Filing Date:	27-Sep-2018
Title of Invention:	MODULAR FIBER OPTIC CASSETTE, SYSTEM AND METHOD
First Named Inventor/Applicant Name:	VINCENT PILON
Filer:	Hugh Mansfield/Regeline Jean Francois
Attorney Docket Number:	771/13569.451

Filed as Large Entity

Filing Fees for Utility under 35 USC 111(a)

Description	Fee Code	Quantity	Amount	Sub-Total in USD($)
Basic Filing:				
Pages:				
Claims:				
Miscellaneous-Filing:				
Petition:				
Patent-Appeals-and-Interference:				
Post-Allowance-and-Post-Issuance:				
Extension-of-Time:				

Description	Fee Code	Quantity	Amount	Sub-Total in USD($)
Extension - 1 month with $0 paid	1251	1	200	200
Miscellaneous:				
			Total in USD ($)	**200**

Electronic Acknowledgement Receipt	
EFS ID:	39200583
Application Number:	16143831
International Application Number:	
Confirmation Number:	4901
Title of Invention:	MODULAR FIBER OPTIC CASSETTE, SYSTEM AND METHOD
First Named Inventor/Applicant Name:	VINCENT PILON
Customer Number:	25545
Filer:	Hugh Mansfield/Regeline Jean Francois
Filer Authorized By:	Hugh Mansfield
Attorney Docket Number:	771/13569.451
Receipt Date:	20-APR-2020
Filing Date:	27-SEP-2018
Time Stamp:	09:45:26
Application Type:	Utility under 35 USC 111(a)

Payment information:

Submitted with Payment	yes
Payment Type	CARD
Payment was successfully received in RAM	$200
RAM confirmation Number	E20204J045524196
Deposit Account	
Authorized User	
The Director of the USPTO is hereby authorized to charge indicated fees and credit any overpayment as follows:	

File Listing:

Document Number	Document Description	File Name	File Size(Bytes)/ Message Digest	Multi Part /.zip	Pages (if appl.)
1		2501-USPTO-AMENDMENT-Response_to_OA_dated_191220.pdf	45190 ae98726cf3bce5570fd1746315fdb4255df63d39	yes	8
	Multipart Description/PDF files in .zip description				
	Document Description		**Start**	**End**	
	Amendment/Req. Reconsideration-After Non-Final Reject		1	1	
	Claims		2	5	
	Applicant Arguments/Remarks Made in an Amendment		6	7	
	Extension of Time		8	8	
Warnings:					
Information:					
2	Fee Worksheet (SB06)	fee-info.pdf	31054 b3b249624a885702b0002b8f0e23006059dc2e55	no	2
Warnings:					
Information:					
		Total Files Size (in bytes):	76244		

This Acknowledgement Receipt evidences receipt on the noted date by the USPTO of the indicated documents, characterized by the applicant, and including page counts, where applicable. It serves as evidence of receipt similar to a Post Card, as described in MPEP 503.

New Applications Under 35 U.S.C. 111
If a new application is being filed and the application includes the necessary components for a filing date (see 37 CFR 1.53(b)-(d) and MPEP 506), a Filing Receipt (37 CFR 1.54) will be issued in due course and the date shown on this Acknowledgement Receipt will establish the filing date of the application.
National Stage of an International Application under 35 U.S.C. 371
If a timely submission to enter the national stage of an international application is compliant with the conditions of 35 U.S.C. 371 and other applicable requirements a Form PCT/DO/EO/903 indicating acceptance of the application as a national stage submission under 35 U.S.C. 371 will be issued in addition to the Filing Receipt, in due course.
New International Application Filed with the USPTO as a Receiving Office
If a new international application is being filed and the international application includes the necessary components for an international filing date (see PCT Article 11 and MPEP 1810), a Notification of the International Application Number and of the International Filing Date (Form PCT/RO/105) will be issued in due course, subject to prescriptions concerning national security, and the date shown on this Acknowledgement Receipt will establish the international filing date of the application.

UNITED STATES PATENT AND TRADEMARK OFFICE

UNITED STATES DEPARTMENT OF COMMERCE
United States Patent and Trademark Office
Address: COMMISSIONER FOR PATENTS
P.O. Box 1450
Alexandria, Virginia 22313-1450
www.uspto.gov

NOTICE OF ALLOWANCE AND FEE(S) DUE

25545 7590 06/01/2020
Lavery, De Billy, LLP
1 Place Ville Marie, Suite 4000
Montreal, QUEBEC H3B 4M4
CANADA

EXAMINER
PEACE, RHONDA S

ART UNIT	PAPER NUMBER
2874	

DATE MAILED: 06/01/2020

APPLICATION NO.	FILING DATE	FIRST NAMED INVENTOR	ATTORNEY DOCKET NO.	CONFIRMATION NO.
16/143,831	09/27/2018	VINCENT PILON	771/13569.451	4901

TITLE OF INVENTION: MODULAR FIBER OPTIC CASSETTE, SYSTEM AND METHOD

APPLN. TYPE	ENTITY STATUS	ISSUE FEE DUE	PUBLICATION FEE DUE	PREV. PAID ISSUE FEE	TOTAL FEE(S) DUE	DATE DUE
nonprovisional	UNDISCOUNTED	$1000	$0.00	$0.00	$1000	09/01/2020

THE APPLICATION IDENTIFIED ABOVE HAS BEEN EXAMINED AND IS ALLOWED FOR ISSUANCE AS A PATENT. PROSECUTION ON THE MERITS IS CLOSED. THIS NOTICE OF ALLOWANCE IS NOT A GRANT OF PATENT RIGHTS. THIS APPLICATION IS SUBJECT TO WITHDRAWAL FROM ISSUE AT THE INITIATIVE OF THE OFFICE OR UPON PETITION BY THE APPLICANT. SEE 37 CFR 1.313 AND MPEP 1308.

THE ISSUE FEE AND PUBLICATION FEE (IF REQUIRED) MUST BE PAID WITHIN THREE MONTHS FROM THE MAILING DATE OF THIS NOTICE OR THIS APPLICATION SHALL BE REGARDED AS ABANDONED. THIS STATUTORY PERIOD CANNOT BE EXTENDED. SEE 35 U.S.C. 151. THE ISSUE FEE DUE INDICATED ABOVE DOES NOT REFLECT A CREDIT FOR ANY PREVIOUSLY PAID ISSUE FEE IN THIS APPLICATION. IF AN ISSUE FEE HAS PREVIOUSLY BEEN PAID IN THIS APPLICATION (AS SHOWN ABOVE), THE RETURN OF PART B OF THIS FORM WILL BE CONSIDERED A REQUEST TO REAPPLY THE PREVIOUSLY PAID ISSUE FEE TOWARD THE ISSUE FEE NOW DUE.

HOW TO REPLY TO THIS NOTICE:

I. Review the ENTITY STATUS shown above. If the ENTITY STATUS is shown as SMALL or MICRO, verify whether entitlement to that entity status still applies.

If the ENTITY STATUS is the same as shown above, pay the TOTAL FEE(S) DUE shown above.

If the ENTITY STATUS is changed from that shown above, on PART B - FEE(S) TRANSMITTAL, complete section number 5 titled "Change in Entity Status (from status indicated above)".

For purposes of this notice, small entity fees are 1/2 the amount of undiscounted fees, and micro entity fees are 1/2 the amount of small entity fees.

II. PART B - FEE(S) TRANSMITTAL, or its equivalent, must be completed and returned to the United States Patent and Trademark Office (USPTO) with your ISSUE FEE and PUBLICATION FEE (if required). If you are charging the fee(s) to your deposit account, section "4b" of Part B - Fee(s) Transmittal should be completed and an extra copy of the form should be submitted. If an equivalent of Part B is filed, a request to reapply a previously paid issue fee must be clearly made, and delays in processing may occur due to the difficulty in recognizing the paper as an equivalent of Part B.

III. All communications regarding this application must give the application number. Please direct all communications prior to issuance to Mail Stop ISSUE FEE unless advised to the contrary.

IMPORTANT REMINDER: Maintenance fees are due in utility patents issuing on applications filed on or after Dec. 12, 1980. It is patentee's responsibility to ensure timely payment of maintenance fees when due. More information is available at www.uspto.gov/PatentMaintenanceFees.

PART B - FEE(S) TRANSMITTAL

Complete and send this form, together with applicable fee(s), by mail or fax, or via EFS-Web.

By mail, send to: Mail Stop ISSUE FEE
Commissioner for Patents
P.O. Box 1450
Alexandria, Virginia 22313-1450

By fax, send to: (571)-273-2885

INSTRUCTIONS: This form should be used for transmitting the ISSUE FEE and PUBLICATION FEE (if required). Blocks 1 through 5 should be completed where appropriate. All further correspondence including the Patent, advance orders and notification of maintenance fees will be mailed to the current correspondence address as indicated unless corrected below or directed otherwise in Block 1, by (a) specifying a new correspondence address; and/or (b) indicating a separate "FEE ADDRESS" for maintenance fee notifications.

CURRENT CORRESPONDENCE ADDRESS (Note: Use Block 1 for any change of address)

25545 7590 06/01/2020
Lavery, De Billy, LLP
1 Place Ville Marie, Suite 4000
Montreal, QUEBEC H3B 4M4
CANADA

Note: A certificate of mailing can only be used for domestic mailings of the Fee(s) Transmittal. This certificate cannot be used for any other accompanying papers. Each additional paper, such as an assignment or formal drawing, must have its own certificate of mailing or transmission.

Certificate of Mailing or Transmission

I hereby certify that this Fee(s) Transmittal is being deposited with the United States Postal Service with sufficient postage for first class mail in an envelope addressed to the Mail Stop ISSUE FEE address above, or being transmitted to the USPTO via EFS-Web or by facsimile to (571) 273-2885, on the date below.

(Typed or printed name)

(Signature)

(Date)

APPLICATION NO.	FILING DATE	FIRST NAMED INVENTOR	ATTORNEY DOCKET NO.	CONFIRMATION NO.
16/143,831	09/27/2018	VINCENT PILON	771/13569.451	4901

TITLE OF INVENTION: MODULAR FIBER OPTIC CASSETTE, SYSTEM AND METHOD

APPLN. TYPE	ENTITY STATUS	ISSUE FEE DUE	PUBLICATION FEE DUE	PREV. PAID ISSUE FEE	TOTAL FEE(S) DUE	DATE DUE
nonprovisional	UNDISCOUNTED	$1000	$0.00	$0.00	$1000	09/01/2020

EXAMINER	ART UNIT	CLASS-SUBCLASS
PEACE, RHONDA S	2874	385-135000

1. Change of correspondence address or indication of "Fee Address" (37 CFR 1.363).

❑ Change of correspondence address (or Change of Correspondence Address form PTO/SB/122) attached.

❑ "Fee Address" indication (or "Fee Address" Indication form PTO/SB/47; Rev 03-09 or more recent) attached. **Use of a Customer Number is required.**

2. For printing on the patent front page, list
(1) The names of up to 3 registered patent attorneys or agents OR, alternatively,
(2) The name of a single firm (having as a member a registered attorney or agent) and the names of up to 2 registered patent attorneys or agents. If no name is listed, no name will be printed.

1_____
2_____
3_____

3. ASSIGNEE NAME AND RESIDENCE DATA TO BE PRINTED ON THE PATENT (print or type)

PLEASE NOTE: Unless an assignee is identified below, no assignee data will appear on the patent. If an assignee is identified below, the document must have been previously recorded, or filed for recordation, as set forth in 37 CFR 3.11 and 37 CFR 3.81(a). Completion of this form is NOT a substitute for filing an assignment.

(A) NAME OF ASSIGNEE (B) RESIDENCE: (CITY and STATE OR COUNTRY)

Please check the appropriate assignee category or categories (will not be printed on the patent) : ❑ Individual ❑ Corporation or other private group entity ❑ Government

4a. Fees submitted: ❑Issue Fee ❑Publication Fee (if required) ❑Advance Order - # of Copies _____

4b. Method of Payment: *(Please first reapply any previously paid fee shown above)*

❑ Electronic Payment via EFS-Web ❑ Enclosed check ❑ Non-electronic payment by credit card (Attach form PTO-2038)

❑ The Director is hereby authorized to charge the required fee(s), any deficiency, or credit any overpayment to Deposit Account No. _____

5. **Change in Entity Status** (from status indicated above)

❑ Applicant certifying micro entity status. See 37 CFR 1.29

❑ Applicant asserting small entity status. See 37 CFR 1.27

❑ Applicant changing to regular undiscounted fee status.

NOTE: Absent a valid certification of Micro Entity Status (see forms PTO/SB/15A and 15B), issue fee payment in the micro entity amount will not be accepted at the risk of application abandonment.
NOTE: If the application was previously under micro entity status, checking this box will be taken to be a notification of loss of entitlement to micro entity status.
NOTE: Checking this box will be taken to be a notification of loss of entitlement to small or micro entity status, as applicable.

NOTE: This form must be signed in accordance with 37 CFR 1.31 and 1.33. See 37 CFR 1.4 for signature requirements and certifications.

Authorized Signature _____ Date _____

Typed or printed name _____ Registration No. _____

UNITED STATES PATENT AND TRADEMARK OFFICE

UNITED STATES DEPARTMENT OF COMMERCE
United States Patent and Trademark Office
Address: COMMISSIONER FOR PATENTS
P.O. Box 1450
Alexandria, Virginia 22313-1450
www.uspto.gov

APPLICATION NO.	FILING DATE	FIRST NAMED INVENTOR	ATTORNEY DOCKET NO.	CONFIRMATION NO.
16/143,831	09/27/2018	VINCENT PILON	771/13569.451	4901

25545 7590 06/01/2020
Lavery, De Billy, LLP
1 Place Ville Marie, Suite 4000
Montreal, QUEBEC H3B 4M4
CANADA

EXAMINER
PEACE, RHONDA S

ART UNIT	PAPER NUMBER
2874	

DATE MAILED: 06/01/2020

Determination of Patent Term Adjustment under 35 U.S.C. 154 (b)
(Applications filed on or after May 29, 2000)

The Office has discontinued providing a Patent Term Adjustment (PTA) calculation with the Notice of Allowance.

Section 1(h)(2) of the AIA Technical Corrections Act amended 35 U.S.C. 154(b)(3)(B)(i) to eliminate the requirement that the Office provide a patent term adjustment determination with the notice of allowance. See Revisions to Patent Term Adjustment, 78 Fed. Reg. 19416, 19417 (Apr. 1, 2013). Therefore, the Office is no longer providing an initial patent term adjustment determination with the notice of allowance. The Office will continue to provide a patent term adjustment determination with the Issue Notification Letter that is mailed to applicant approximately three weeks prior to the issue date of the patent, and will include the patent term adjustment on the patent. Any request for reconsideration of the patent term adjustment determination (or reinstatement of patent term adjustment) should follow the process outlined in 37 CFR 1.705.

Any questions regarding the Patent Term Extension or Adjustment determination should be directed to the Office of Patent Legal Administration at (571)-272-7702. Questions relating to issue and publication fee payments should be directed to the Customer Service Center of the Office of Patent Publication at 1-(888)-786-0101 or (571)-272-4200.

PTOL-85 (Rev. 02/11)

OMB Clearance and PRA Burden Statement for PTOL-85 Part B

The Paperwork Reduction Act (PRA) of 1995 requires Federal agencies to obtain Office of Management and Budget approval before requesting most types of information from the public. When OMB approves an agency request to collect information from the public, OMB (i) provides a valid OMB Control Number and expiration date for the agency to display on the instrument that will be used to collect the information and (ii) requires the agency to inform the public about the OMB Control Number's legal significance in accordance with 5 CFR 1320.5(b).

The information collected by PTOL-85 Part B is required by 37 CFR 1.311. The information is required to obtain or retain a benefit by the public which is to file (and by the USPTO to process) an application. Confidentiality is governed by 35 U.S.C. 122 and 37 CFR 1.14. This collection is estimated to take 30 minutes to complete, including gathering, preparing, and submitting the completed application form to the USPTO. Time will vary depending upon the individual case. Any comments on the amount of time you require to complete this form and/or suggestions for reducing this burden, should be sent to the Chief Information Officer, U.S. Patent and Trademark Office, U.S. Department of Commerce, P.O. Box 1450, Alexandria, Virginia 22313-1450. DO NOT SEND FEES OR COMPLETED FORMS TO THIS ADDRESS. SEND TO: Commissioner for Patents, P.O. Box 1450, Alexandria, Virginia 22313-1450. Under the Paperwork Reduction Act of 1995, no persons are required to respond to a collection of information unless it displays a valid OMB control number.

Privacy Act Statement

The Privacy Act of 1974 (P.L. 93-579) requires that you be given certain information in connection with your submission of the attached form related to a patent application or patent. Accordingly, pursuant to the requirements of the Act, please be advised that: (1) the general authority for the collection of this information is 35 U.S.C. 2(b)(2); (2) furnishing of the information solicited is voluntary; and (3) the principal purpose for which the information is used by the U.S. Patent and Trademark Office is to process and/or examine your submission related to a patent application or patent. If you do not furnish the requested information, the U.S. Patent and Trademark Office may not be able to process and/or examine your submission, which may result in termination of proceedings or abandonment of the application or expiration of the patent.

The information provided by you in this form will be subject to the following routine uses:

1. The information on this form will be treated confidentially to the extent allowed under the Freedom of Information Act (5 U.S.C. 552) and the Privacy Act (5 U.S.C 552a). Records from this system of records may be disclosed to the Department of Justice to determine whether disclosure of these records is required by the Freedom of Information Act.
2. A record from this system of records may be disclosed, as a routine use, in the course of presenting evidence to a court, magistrate, or administrative tribunal, including disclosures to opposing counsel in the course of settlement negotiations.
3. A record in this system of records may be disclosed, as a routine use, to a Member of Congress submitting a request involving an individual, to whom the record pertains, when the individual has requested assistance from the Member with respect to the subject matter of the record.
4. A record in this system of records may be disclosed, as a routine use, to a contractor of the Agency having need for the information in order to perform a contract. Recipients of information shall be required to comply with the requirements of the Privacy Act of 1974, as amended, pursuant to 5 U.S.C. 552a(m).
5. A record related to an International Application filed under the Patent Cooperation Treaty in this system of records may be disclosed, as a routine use, to the International Bureau of the World Intellectual Property Organization, pursuant to the Patent Cooperation Treaty.
6. A record in this system of records may be disclosed, as a routine use, to another federal agency for purposes of National Security review (35 U.S.C. 181) and for review pursuant to the Atomic Energy Act (42 U.S.C. 218(c)).
7. A record from this system of records may be disclosed, as a routine use, to the Administrator, General Services, or his/her designee, during an inspection of records conducted by GSA as part of that agency's responsibility to recommend improvements in records management practices and programs, under authority of 44 U.S.C. 2904 and 2906. Such disclosure shall be made in accordance with the GSA regulations governing inspection of records for this purpose, and any other relevant (i.e., GSA or Commerce) directive. Such disclosure shall not be used to make determinations about individuals.
8. A record from this system of records may be disclosed, as a routine use, to the public after either publication of the application pursuant to 35 U.S.C. 122(b) or issuance of a patent pursuant to 35 U.S.C. 151. Further, a record may be disclosed, subject to the limitations of 37 CFR 1.14, as a routine use, to the public if the record was filed in an application which became abandoned or in which the proceedings were terminated and which application is referenced by either a published application, an application open to public inspection or an issued patent.
9. A record from this system of records may be disclosed, as a routine use, to a Federal, State, or local law enforcement agency, if the USPTO becomes aware of a violation or potential violation of law or regulation.

Notice of Allowability	Application No. 16/143,831	Applicant(s) PILON, VINCENT	
	Examiner R. PEACE	Art Unit 2874	AIA (FITF) Status Yes

-- The MAILING DATE of this communication appears on the cover sheet with the correspondence address--

All claims being allowable, PROSECUTION ON THE MERITS IS (OR REMAINS) CLOSED in this application. If not included herewith (or previously mailed), a Notice of Allowance (PTOL-85) or other appropriate communication will be mailed in due course. **THIS NOTICE OF ALLOWABILITY IS NOT A GRANT OF PATENT RIGHTS.** This application is subject to withdrawal from issue at the initiative of the Office or upon petition by the applicant. See 37 CFR 1.313 and MPEP 1308.

1. ☑ This communication is responsive to the amendment filed 4/20/20.
   ☐ A declaration(s)/affidavit(s) under **37 CFR 1.130(b)** was/were filed on _____.

2. ☐ An election was made by the applicant in response to a restriction requirement set forth during the interview on _____; the restriction requirement and election have been incorporated into this action.

3. ☑ The allowed claim(s) is/are 1-5 and 7-16 . As a result of the allowed claim(s), you may be eligible to benefit from the **Patent Prosecution Highway** program at a participating intellectual property office for the corresponding application. For more information , please see **http://www.uspto.gov/patents/init_events/pph/index.jsp** or send an inquiry to **PPHfeedback@uspto.gov.**

4. ☐ Acknowledgment is made of a claim for foreign priority under 35 U.S.C. § 119(a)-(d) or (f).

   Certified copies:

   a) ☐All b) ☐ Some *c) ☐ None of the:

   1. ☐ Certified copies of the priority documents have been received.
   2. ☐ Certified copies of the priority documents have been received in Application No. _____ .
   3. ☐ Copies of the certified copies of the priority documents have been received in this national stage application from the International Bureau (PCT Rule 17.2(a)).

   * Certified copies not received: _____ .

Applicant has THREE MONTHS FROM THE "MAILING DATE" of this communication to file a reply complying with the requirements noted below. Failure to timely comply will result in ABANDONMENT of this application.
THIS THREE-MONTH PERIOD IS NOT EXTENDABLE.

5. ☐ CORRECTED DRAWINGS (as "replacement sheets") must be submitted.
   ☐ including changes required by the attached Examiner's Amendment / Comment or in the Office action of Paper No./Mail Date _____ .

   Identifying indicia such as the application number (see 37 CFR 1.84(c)) should be written on the drawings in the front (not the back) of each sheet. Replacement sheet(s) should be labeled as such in the header according to 37 CFR 1.121(d).

6. ☐ DEPOSIT OF and/or INFORMATION about the deposit of BIOLOGICAL MATERIAL must be submitted. Note the attached Examiner's comment regarding REQUIREMENT FOR THE DEPOSIT OF BIOLOGICAL MATERIAL.

Attachment(s)

1. ☑ Notice of References Cited (PTO-892)
2. ☐ Information Disclosure Statements (PTO/SB/08), Paper No./Mail Date _____.
3. ☐ Examiner's Comment Regarding Requirement for Deposit of Biological Material _____.
4. ☐ Interview Summary (PTO-413), Paper No./Mail Date. _____.
5. ☐ Examiner's Amendment/Comment
6. ☑ Examiner's Statement of Reasons for Allowance
7. ☐ Other _____.

/RHONDA S PEACE/
Primary Examiner, Art Unit 2874

DETAILED ACTION

Notice of Pre-AIA or AIA Status

The present application, filed on or after March 16, 2013, is being examined under the first inventor to file provisions of the AIA.

Allowable Subject Matter

Claims 1-5 and 7-16 are allowed.

The following is an examiner's statement of reasons for allowance:

Re. Claims 1-5, 7 and 8, the prior art does not disclose or reasonably suggest a modular fiber optic cassette system, the system comprising: a case comprising a top and a bottom wall and two opposed side walls, each of said sidewalls attached between respective side edges of said top and bottom wall, said walls together defining a tray receiving space there between and a forward edge of each said wall together defining an opening to said tray receiving space; at least one tray slideably received within said tray receiving space for movement between a stored position wherein said tray is completely inside said tray receiving space and an accessible position wherein a front end of said tray is in front of said opening and outside of said tray receiving space; a set of fiber optic cassettes, a selected plurality of the cassettes arrangeable side by side along said tray front end wherein each of said cassettes comprises a plurality of optic plug receiving receptacles arranged side by side in a row along a front thereof, a first of said set of cassettes comprising a first cassette width of one of one, two, three, four and six standard width units and a second of said cassettes comprising a second cassette width different from said first cassette width and one of one, two, three, four and six

standard width units; and a fastener for removeably securing each of said cassettes to said tray *wherein when arranged on said at least one tray each of said fiber optic cassettes touches at least one other fiber optic cassette.*

Re. Claims 9-14, the prior art does not disclose or reasonably suggest a method for organizing a tray comprising a front edge in a fiber optic interconnect system, the method comprising: defining a standard width unit wherein a width of the front edge is substantially evenly divisible by said standard width unit; selecting a plurality of cassettes for installation on the tray from a set of cassettes having a plurality of different widths, wherein each of said different widths is evenly divisible by said standard width unit; and releasably securing said selected cassettes along the front edge of the tray; *wherein when arranged on the tray each of said selected cassettes touches at least one other selected cassette.*

The most applicable prior art, Sedor et al (US 10,215,944 B2), addressed in the Office Action mailed 12/20/19, fails to disclose or reasonably suggest the claimed invention, specifically those portions *highlighted* above in combination with the remaining features of the claims. Specifically, Sedor et al. discloses modular trays comprising different sized fiber optic modules, where removable rails are provided which may be removeably secured to a tray body in one of a number of positions so as to accommodate the different sizes of modules. Each of these essential rails are positioned between adjacent ones of the modules, and therefore Sedor et al fails to disclose the *highlighted* portion of the claims. Moreover, one of ordinary skill would not have been motivated to remove the rails in Sedor et al, to enable the modular trays to touch one another, as the rails are necessary to affix the modules to the tray.

Re Claims 15 and 16, the prior art does not disclose or reasonably suggest a modular fiber optic cassette for releasably securing to a tray fabricated from a ferrous metal and comprising a plurality of spaced slots, the cassette comprising: an elongate rectangular optic fiber receiving housing; a plurality of optic plug receiving receptacles arranged in a row along a front of said housing; a multi fiber connector receiving receptacle on a rear thereof; a plurality of optic fibers interconnecting a respective one of said optic plug receiving receptacles with said multi fiber connector receiving receptacle; a magnet secured to an underside of said housing; and *a pair of stabilizing bosses on said underside of said housing, each of said bosses on opposite sides of said magnet; wherein when said cassette is placed on said tray, each of said bosses engages a respective one of said spaced slots.*

The most applicable prior art, Sedor et al (US 10,215,944 B2), addressed in the Office Action mailed 12/20/19, fails to disclose or reasonably suggest the claimed invention, specifically those portions *highlighted* above in combination with the remaining features of the claims. Sedor et al. fails to disclose or suggest the *highlighted* structural elements required by the claim. The remaining applicable art, see the PTO-892 mailed 4/29/19 and 12/20/19, as well as the PTO-892 attached to the current Action, fail to reasonably suggest the *highlighted* structure of the claims.

Any comments considered necessary by applicant must be submitted no later than the payment of the issue fee and, to avoid processing delays, should preferably accompany the issue fee. Such submissions should be clearly labeled “Comments on Statement of Reasons for Allowance.”

Conclusion

The prior art made of record and not relied upon is considered pertinent to applicant's disclosure. See the attached PTO-892.

Any inquiry concerning this communication or earlier communications from the examiner should be directed to R. PEACE whose telephone number is (571)272-8580. The examiner can normally be reached on 9-5 pm.

Examiner interviews are available via telephone, in-person, and video conferencing using a USPTO supplied web-based collaboration tool. To schedule an interview, applicant is encouraged to use the USPTO Automated Interview Request (AIR) at http://www.uspto.gov/interviewpractice.

If attempts to reach the examiner by telephone are unsuccessful, the examiner's supervisor, Uyen-Chau Le can be reached on (571) 272-2397. The fax phone number for the organization where this application or proceeding is assigned is 571-273-8300.

Information regarding the status of an application may be obtained from the Patent Application Information Retrieval (PAIR) system. Status information for published applications may be obtained from either Private PAIR or Public PAIR. Status information for unpublished applications is available through Private PAIR only. For more information about the PAIR system, see https://ppair-my.uspto.gov/pair/PrivatePair. Should you have questions on access to the Private PAIR system, contact the Electronic Business Center (EBC) at 866-217-9197 (toll-free). If you would like assistance from a USPTO Customer Service Representative or access to the automated information system, call 800-786-9199 (IN USA OR CANADA) or 571-272-1000.

/RHONDA S PEACE/
Primary Examiner, Art Unit 2874
5/19/20

Notice of References Cited	Application/Control No. 16/143,831	Applicant(s)/Patent Under Reexamination PILON, VINCENT	
	Examiner R. PEACE	Art Unit 2874	Page 1 of 1

U.S. PATENT DOCUMENTS

*		Document Number Country Code-Number-Kind Code	Date MM-YYYY	Name	CPC Classification	US Classification
*	A	US-10514518-B1	12-2019	Livingston; Joseph C.	G02B6/4454	1/1
*	B	US-20190107682-A1	04-2019	ARAMAYO; ALDO LOAYZA	G02B6/4455	1/1
*	C	US-20190187394-A1	06-2019	FONTAINE; MARC	G02B6/4455	1/1
*	D	US-20190162924-A1	05-2019	FONTAINE; MARC	G02B6/3897	1/1
	E					
	F					
	G					
	H					
	I					
	J					
	K					
	L					
	M					

FOREIGN PATENT DOCUMENTS

*		Document Number Country Code-Number-Kind Code	Date MM-YYYY	Country	Name	CPC Classification
	N					
	O					
	P					
	Q					
	R					
	S					
	T					

NON-PATENT DOCUMENTS

*		Include as applicable: Author, Title Date, Publisher, Edition or Volume, Pertinent Pages)
	U	
	V	
	W	
	X	

*A copy of this reference is not being furnished with this Office action. (See MPEP § 707.05(a).)
Dates in MM-YYYY format are publication dates. Classifications may be US or foreign.

Issue Classification	Application/Control No.	Applicant(s)/Patent Under Reexamination
	16/143,831	PILON, VINCENT
	Examiner	**Art Unit**
	R. PEACE	2874

CPC						
Symbol					**Type**	**Version**
G02B	/	6	/	4455	F	2013-01-01
G02B	/	6	/	46	I	2013-01-01

CPC Combination Sets								
Symbol					**Type**	**Set**	**Ranking**	**Version**
	/		/					

NONE (Assistant Examiner)	(Date)	**Total Claims Allowed:** 15	
/RHONDA S PEACE/ Primary Examiner, Art Unit 2874 (Primary Examiner)	19 May 2020 (Date)	O.G. Print Claim(s) 1	O.G. Print Figure 1

U.S. Patent and Trademark Office

Part of Paper No.: 20200518

Issue Classification	Application/Control No.	Applicant(s)/Patent Under Reexamination
	16/143,831	PILON, VINCENT
	Examiner	**Art Unit**
	R. PEACE	2874

INTERNATIONAL CLASSIFICATION				
CLAIMED				
G02B6/44	/	6	/	44
G02B6/46	/	6	/	46

NON-CLAIMED				
	/		/	

US ORIGINAL CLASSIFICATION	
CLASS	**SUBCLASS**

CROSS REFERENCES(S)						
CLASS	**SUBCLASS (ONE SUBCLASS PER BLOCK)**					

NONE (Assistant Examiner)	(Date)	**Total Claims Allowed:** 15	
/RHONDA S PEACE/ Primary Examiner, Art Unit 2874 (Primary Examiner)	19 May 2020 (Date)	O.G. Print Claim(s) 1	O.G. Print Figure 1

U.S. Patent and Trademark Office

Part of Paper No.: 20200518

Issue Classification	Application/Control No.	Applicant(s)/Patent Under Reexamination
	16/143,831	PILON, VINCENT
	Examiner	**Art Unit**
	R. PEACE	2874

☐ Claims renumbered in the same order as presented by applicant ☐ CPA ☐ T.D. ☐ R.1.47

CLAIMS

Final	Original	Final	Original	Final	Original	Final	Original	Final	Original	Final	Original	Final	Original	Final	Original
1	1	9	10												
2	2	10	11												
3	3	11	12												
4	4	13	13												
5	5	12	14												
	6	14	15												
6	7	15	16												
7	8		17												
8	9		18												

NONE (Assistant Examiner)	(Date)	**Total Claims Allowed:** 15	
/RHONDA S PEACE/ Primary Examiner, Art Unit 2874 (Primary Examiner)	19 May 2020 (Date)	O.G. Print Claim(s) 1	O.G. Print Figure 1

U.S. Patent and Trademark Office Part of Paper No.: 20200518

Search Notes	Application/Control No.	Applicant(s)/Patent Under Reexamination
	16/143,831	PILON, VINCENT
	Examiner	**Art Unit**
	R. PEACE	2874

CPC - Searched*		
Symbol	**Date**	**Examiner**
G02B 6/4455	04/23/2019	RSP
G02B 6/4453-4455 (with text limiting)	12/17/2019	RSP
G02B 6/4453-4455 (with text limiting)	05/18/2020	RSP

CPC Combination Sets - Searched*		
Symbol	**Date**	**Examiner**

US Classification - Searched*			
Class	**Subclass**	**Date**	**Examiner**

* See search history printout included with this form or the SEARCH NOTES box below to determine the scope of the search.

Search Notes		
Search Notes	**Date**	**Examiner**
global dossier search	04/23/2019	RSP
inventor and assignee searches	04/23/2019	RSP
see attached EAST search history report	04/24/2019	RSP
see attached EAST search history report	08/07/2019	RSP
global dossier search	12/17/2019	RSP
see attached EAST search history report	12/17/2019	RSP
see attached EAST search history report	05/18/2020	RSP

/RHONDA S PEACE/ Primary Examiner, Art Unit 2874	

Search Notes	Application/Control No.	Applicant(s)/Patent Under Reexamination
	16/143,831	PILON, VINCENT
	Examiner	**Art Unit**
	R. PEACE	2874

Interference Search			
US Class/CPC Symbol	**US Subclass/CPC Group**	**Date**	**Examiner**
	interference search (USPAT and USPGPub databases)	12/17/2019	RSP
	interference search (USPAT and USPGPub databases)	05/18/2020	RSP

/RHONDA S PEACE/ Primary Examiner, Art Unit 2874	

EAST Search History

EAST Search History (Prior Art)

Ref #	Hits	Search Query	DBs	Default Operator	Plurals	Time Stamp
L14	14	11 not (12 or 13)	US-PGPUB; USPAT; USOCR; FPRS; EPO; JPO; DERWENT; IBM_TDB	OR	ON	2020/05/18 10:44
L13	9	(US-20020131730-$ or US-20070131628-$ or US-20160033732-$).did. or (US-10281672-$ or US-7331722-$ or US-7509015-$ or US-8913866-$ or US-9008485-$ or US-9075216-$).did.	US-PGPUB; USPAT	OR	ON	2020/05/18 10:43
L12	6	(US-20090290842-$ or US-20160062050-$ or US-20190004268-$ or US-20190101717-$).did. or (US-10215944-$ or US-4792203-$).did.	US-PGPUB; USPAT	OR	ON	2020/05/18 10:43
L11	29	(US-20160062050-$ or US-20160062055-$ or US-20160062058-$ or US-20160062068-$ or US-20170192191-$ or US-20180003912-$ or US-20180100976-$ or US-20190004268-$ or US-20190101717-$ or US-20090290842-$ or US-20160033732-$ or US-20020131730-$ or US-20070131628-$ or US-20190107682-$ or US-20190187394-$).did. or (US-10215944-$ or US-10254497-$ or US-9841574-$ or US-4792203-$ or US-8554044-$ or US-4840449-$ or US-8913866-$ or US-7509015-$ or US-9075216-$ or US-9008485-$ or US-7331722-$ or US-10281672-$ or US-10514518-$).did. or (EP-3404461-$).did.	US-PGPUB; USPAT; FPRS	OR	ON	2020/05/18 10:43
L10	2	("20190187394" | "9223094").PN. OR ("10514518").URPN.	US-PGPUB; USPAT; USOCR	OR	ON	2020/05/18 10:39

L9	82	7 and (((dissimilar or differ$4 or varying or various or variable) near4 (size or footprint or width)) same (module or cassette))	US-PGPUB; USPAT; USOCR; FPRS; EPO; JPO; DERWENT; IBM_TDB	OR	ON	2020/05/18 10:37
L8	674	7 and modular	US-PGPUB; USPAT; USOCR; FPRS; EPO; JPO; DERWENT; IBM_TDB	OR	ON	2020/05/18 10:27
L7	8985	G02B6/4453-4455.cpc.	US-PGPUB; USPAT; USOCR; FPRS; EPO; JPO; DERWENT; IBM_TDB	OR	ON	2020/05/18 10:24
L6	77	("20030223723" | "4900123" | "5915802" | "6282360" | "6356697" | "6758600" | "6869227" | "6925241" | "7205481" | "7333706").PN. OR ("7509015").URPN.	US-PGPUB; USPAT; USOCR	OR	ON	2020/05/18 10:18
L5	35	("20020150370" | "20050237721" | "20110274402" | "20130188919" | "20150219866" | "20170269324" | "20190101717" | "20190107682" | "4595255" | "4752110" | "4884863" | "4971421" | "5208894" | "5519804" | "5546495" | "5737475" | "5825962" | "5835657" | "5898129" | "6226436" | "6438310" | "6496640" | "6504988" | "6748155" | "6944389" | "7970249" | "8009954" | "8154886" | "8554044" | "9008485" | "9366837" | "9423585" | "9575274" | "9588317" | "9791653").PN. OR ("10641980").URPN.	US-PGPUB; USPAT; USOCR	OR	ON	2020/05/18 10:12
L4	1	("2019/0101717").URPN.	USPAT	OR	ON	2020/05/18 10:11

S22	20	S20 not S21	US-PGPUB; USPAT; USOCR; FPRS; EPO; JPO; DERWENT; IBM_TDB	OR	ON	2019/12/17 16:46
S21	6	(US-20090290842-$ or US-20160062050-$ or US-20190004268-$ or US-20190101717-$).did. or (US-10215944-$ or US-4792203-$).did.	US-PGPUB; USPAT	OR	ON	2019/12/17 16:45
S20	26	(US-20160062050-$ or US-20160062055-$ or US-20160062058-$ or US-20160062068-$ or US-20170192191-$ or US-20180003912-$ or US-20180100976-$ or US-20190004268-$ or US-20190101717-$ or US-20090290842-$ or US-20160033732-$ or US-20020131730-$ or US-20070131628-$).did. or (US-10215944-$ or US-10254497-$ or US-9841574-$ or US-4792203-$ or US-8554044-$ or US-4840449-$ or US-8913866-$ or US-7509015-$ or US-9075216-$ or US-9008485-$ or US-7331722-$ or US-10281672-$).did. or (EP-3404461-$).did.	US-PGPUB; USPAT; FPRS	OR	ON	2019/12/17 16:45
S19	70	G02B6/4453-4455.cpc. and (magnet$5)	US-PGPUB; USPAT; USOCR; FPRS; EPO; JPO; DERWENT; IBM_TDB	OR	ON	2019/12/17 16:36
S18	1494	G02B6/$.cpc. and (magnet$5 same (cassette or module))	US-PGPUB; USPAT; USOCR; FPRS; EPO; JPO; DERWENT; IBM_TDB	OR	ON	2019/12/17 15:56
S17	5	S16 and magnet$4	US-PGPUB; USPAT; USOCR; FPRS; EPO; JPO;	OR	ON	2019/12/17 15:54

			DERWENT; IBM_TDB			
S16	24	(US-20160062050-$ or US-20160062055-$ or US-20160062058-$ or US-20160062068-$ or US-20170192191-$ or US-20180003912-$ or US-20180100976-$ or US-20190004268-$ or US-20190101717-$ or US-20090290842-$ or US-20160033732-$ or US-20020131730-$ or US-20070131628-$).did. or (US-10215944-$ or US-10254497-$ or US-9841574-$ or US-4792203-$ or US-8554044-$ or US-4840449-$ or US-8913866-$ or US-7509015-$ or US-9075216-$ or US-9008485-$).did. or (EP-3404461-$).did.	US-PGPUB; USPAT; FPRS	OR	ON	2019/12/17 15:54
S15	74	("20030223723" | "4900123" | "5915802" | "6282360" | "6356697" | "6758600" | "6869227" | "6925241" | "7205481" | "7333706").PN. OR ("7509015").URPN.	US-PGPUB; USPAT; USOCR	OR	ON	2019/12/17 11:46
S14	1087	("0620013" | "20010010741" | "20010029125" | "20020010818" | "20020012353" | "20020014571" | "20020034290" | "20020037139" | "20020064364" | "20020131730" | "20020136519" | "20020141724" | "20020150372" | "20020172467" | "20020180163" | "20020181918" | "20020181922" | "20020191939" | "20020194596" | "20030002802" | "20030007743" | "20030007767" | "20030011855" | "20030021539" | "20030036748" | "20030051026" | "20030066998" | "20030086675" | "20030095753" | "20030147604" | "20030156552" | "20030174996" | "20030180004" | "20030180012" | "20030183413" | "20030199201" | "20030210882" | "20030223723" | "20030223725" | "20030235387" | "20040001717" | "20040013389" | "20040013390" | "20040022494" | "20040024934" | "20040067036" | "20040074852" | "20040086238" | "20040086252" | "20040120679" | "20040147159" | "20040151465" | "20040175090" | "20040192115" |	US-PGPUB; USPAT; USOCR	OR	ON	2019/12/17 11:25

		"20040196841" | "20040208459" |				
		"20040228598" | "20040240827" |				
		"20040240882" | "20040264873" |				
		"20050002633" | "20050008131" |				
		"20050026497" | "20050036749" |				
		"20050067358" | "20050069248" |				
		"20050074990" | "20050076149" |				
		"20050083959" | "20050107086" |				
		"20050111809" | "20050123261" |				
		"20050129379" | "20050175293" |				
		"20050178573" | "20050201073" |				
		"20050232566" | "20050233647" |				
		"20050254757" | "20050281526" |				
		"20050281527" | "20050285493" |				
		"20060007562" | "20060018448" |				
		"20060018622" | "20060034048" |				
		"20060039290" | "20060044774" |				
		"20060045458" | "20060072606" |				
		"20060077968" | "20060093303" |				
		"20060103270" | "20060110118").PN. OR				
		("20060127026" | "20060133736" |				
		"20060133759" | "20060147172" |				
		"20060153517" | "20060160377" |				
		"20060165365" | "20060165366" |				
		"20060191700" | "20060193590" |				
		"20060193591" | "20060198098" |				
		"20060204179" | "20060215980" |				
		"20060225912" | "20060228087" |				
		"20060269194" | "20060269206" |				
		"20060269208" | "20060275008" |				
		"20060275009" | "20060285812" |				
		"20070003204" | "20070025070" |				
		"20070031099" | "20070033629" |				
		"20070047894" | "20070058641" |				
		"20070086723" | "20070104447" |				
		"20070110373" | "20070127201" |				
		"20070131628" | "20070183732" |				
		"20070189692" | "20070196071" |				
		"20070221793" | "20070237484" |				
		"20070257159" | "20070266192" |				
		"20070274718" | "20080011514" |				
		"20080025683" | "20080031585" |				
		"20080063350" | "20080068788" |				
		"20080069511" | "20080069512" |				
		"20080078899" | "20080080826" |				
		"20080080827" | "20080080828" |				
		"20080085094" | "20080089656" |				
		"20080095502" | "20080095541" |				
		"20080100440" | "20080106871" |				

		"20080112681" | "20080118207" |				
		"20080121423" | "20080124039" |				
		"20080131068" | "20080145013" |				
		"20080152294" | "20080166094" |				
		"20080166131" | "20080175541" |				
		"20080175550" | "20080175551" |				
		"20080175552" | "20080193091" |				
		"20080205823" | "20080205843" |				
		"20080205844" | "20080212928" |				
		"20080219632" | "20080219634" |				
		"20080236858" | "20080247723" |				
		"20080267573" | "20080285934" |				
		"20080292261" | "20080296060" |				
		"20080298763" | "20080304803" |				
		"20080310810" | "20090010607" |				
		"20090016685" | "20090022470" |				
		"20090038845" | "20090060439" |				
		"20090060440").PN. OR ("20090067800" |				
		"20090074371" | "20090080849" |				
		"20090097813" | "20090110347" |				
		"20090121092" | "20090136194" |				
		"20090136195" | "20090136196" |				
		"20090146342" | "20090148117" |				
		"20090166404" | "20090169163" |				
		"20090175588" | "20090180749" |				
		"20090184221" | "20090185782" |				
		"20090191891" | "20090194647" |				
		"20090196563" | "20090202214" |				
		"20090207577" | "20090208178" |				
		"20090208210" | "20090212679" |				
		"20090214171" | "20090220200" |				
		"20090220204" | "20090226142" |				
		"20090238531" | "20090245743" |				
		"20090252472" | "20090257726" |				
		"20090257727" | "20090257754" |				
		"20090263096" | "20090263122" |				
		"20090267865" | "20090269016" |				
		"20090269018" | "20090269019" |				
		"20090274429" | "20090274430" |				
		"20090274432" | "20090290842" |				
		"20090290843" | "20090297111" |				
		"20090304342" | "20090324189" |				
		"20100003000" | "20100012671" |				
		"20100027953" | "20100054681" |				
		"20100054682" | "20100054683" |				
		"20100054684" | "20100054685" |				
		"20100054686" | "20100054687" |				
		"20100061691" | "20100061693" |				
		"20100074587" | "20100080517" |				

		"20100086267" | "20100086274" | "20100111483" | "20100119201" | "20100129035" | "20100142544" | "20100142910" | "20100150518" | "20100158467" | "20100166377" | "20100178022" | "20100202740" | "20100202745" | "20100202748" | "20100220967" | "20100220968" | "20100247051" | "20100266245" | "20100278499" | "20100296790" | "20100296791" | "20100310225" | "20100310226" | "20100316334" | "20100322554" | "20100322579" | "20100322580" | "20100322581" | "20100322582" | "20100322583").PN. OR ("20100329624" | "20110008004" | "20110069931" | "20110073730" | "20110085774" | "20110085776" | "20110097053" | "20110097977" | "20110129185" | "20110129186" | "20110186532" | "20110192631" | "20110211799" | "20110217014" | "20110217016" | "20110222821" | "20110249950" | "20110268404" | "20110268405" | "20110268407" | "20110268408" | "20110268413" | "20110280537" | "20120025683" | "20120051707" | "20120057838" | "20120106899" | "20120183263" | "20120183289" | "20120219263" | "20120288244" | "20120288248" | "20120301083" | "20130004136" | "20130058616" | "20130077927" | "20130214108" | "20130266282" | "20130308916" | "20140003782" | "20140010510" | "20140112628" | "2528910" | "2614685" | "3081717" | "3175873" | "3212192" | "3433886" | "3494306" | "3545712" | "3568263" | "3646244" | "3664514" | "3683238" | "3701835" | "3880396" | "3906592" | "3991960" | "4047797" | "4059872" | "4119285" | "4148454" | "4239316" | "4244638" | "4285486" | "4303296" | "4354731" | "4457482" | "4525012" | "4540222" | "4561615" | "4564163" | "4597173" | "4611875" | "4635886" | "4645292" | "4657340" | "4681288" | "4702551" | "4711518" | "4736100" |				

		"4744629" | "4747020" | "4752110" | "4753510" | "4787706" | "4792203" | "4798432" | "4805979" | "4808774" | "4824193" | "4824196" | "4826277" | "4838643" | "4840449" | "4865280" | "4898448" | "4900123" | "4911662" | "4948220" | "4949376" | "4971421" | "4986625" | "4988831" | "4991928" | "4995688" | "5001602" | "5005941" | "5017211" | "5023646" | "5024498").PN. OR ("5028114" | "5037175" | "5048918" | "5060897" | "5066149" | "5067784" | "5071211" | "5071220" | "5073042" | "5074635" | "5076688" | "5080459" | "5100221" | "5104336" | "5125060" | "5127082" | "5127851" | "5129030" | "5129607" | "5133039" | "5138678" | "5138688" | "5142598" | "5142607" | "5150277" | "5152760" | "5153910" | "5157749" | "5167001" | "5170452" | "5189723" | "5199099" | "5204929" | "5209572" | "5214735" | "5224186" | "5230492" | "5231687" | "5231688" | "5233674" | "5239609" | "5243679" | "5253320" | "5260957" | "5261633" | "5265187" | "5274729" | "5274731" | "5278933" | "5280138" | "5285515" | "5291570" | "5315679" | "5317663" | "5323478" | "5323480" | "5329520" | "5333193" | "5333221" | "5333222" | "5337400" | "5339379" | "5347603" | "5353367" | "5359688" | "5363466" | "5363467" | "5366388" | "5367598" | "5373421" | "5383051" | "5390272" | "5398295" | "5398820" | "5399814" | "5401193" | "5402515" | "5408557" | "5412751" | "5416837" | "5418874" | "5420956" | "5420958" | "5421532" | "5438641" | "5442725" | "5442726" | "5443232" | "5444804" | "5448015" | "5450518" | "5458019" | "5471555" | "5479505" | "5481634" | "5481939" | "5490229" | "5497416" | "5497444" | "5511144" | "5511798" | "5519804" | "5530786" | "5535970" | "5538213" | "5542015" | "5546495" | "5548641" | "5553183" | "5553186" | "5563971" | "5572617" | "5575680" | "5577151" | "5590234" | "5595507" | "5596670" |				

		"5600020" | "5602954" | "5608606" | "5613030" | "5617501" | "5638474" | "5640476" | "5640482").PN. OR ("5647043" | "5647045" | "5650334" | "5668910" | "5668911" | "5671273" | "5689605" | "5689607" | "5692079" | "5694511" | "5701380" | "5704573" | "5708742" | "5708751" | "5710851" | "5717810" | "5734776" | "5740300" | "5742982" | "5751874" | "5751882" | "5754724" | "5758003" | "5758004" | "5761026" | "5765698" | "5769908" | "5774612" | "5778122" | "5778130" | "5781686" | "5788087" | "5790741" | "5793920" | "5793921" | "5796908" | "5806687" | "5823646" | "5825955" | "5825961" | "5828807" | "5832162" | "5835657" | "5835658" | "5862290" | "5870519" | "5874733" | "5877565" | "5880864" | "5881200" | "5883995" | "5884003" | "5887095" | "5887106" | "5892877" | "5894540" | "5901220" | "5903693" | "5906342" | "5909298" | "5913006" | "5914976" | "5915055" | "5923804" | "5930425" | "5933557" | "5940563" | "5943460" | "5945633" | "5946440" | "5949946" | "5953962" | "5956439" | "5956444" | "5956449" | "5966492" | "5969294" | "5975769" | "5978540" | "5980303" | "5987203" | "5993071" | "5995700" | "5999393" | "6001831" | "6009224" | "6009225" | "6011831" | "6027252" | "6027352" | "6041042" | "6044193" | "6049963" | "6058235" | "6061492" | "6078661" | "6079881" | "6088497" | "6118075" | "6127627" | "6130983" | "6134370" | "6141222" | "6149313" | "6149315" | "6151432" | "6160946" | "6170784" | "6172782" | "6175079" | "6181861" | "6188687" | "6188825" | "6192180" | "6200170" | "6201919" | "6201920" | "6208796" | "6212324" | "6215938" | "6216987" | "6227717" | "6229948" | "6234683" | "6234685").PN. OR ("6236795" | "6240229" | "6243522" | "6245998" | "6247851" | "6250816" | "6259850" | "6263141" | "6265680" | "6269212" | "6273532" | "6275641" | "6278829" | "6278831" |				

		"6289618" | "6292614" | "6301424" | "6305848" | "6307997" | "6318824" | "6321017" | "6322279" | "6324575" | "6325549" | "6327059" | "6343313" | "6344615" | "6347888" | "6353696" | "6353697" | "6357712" | "6359228" | "6363198" | "6363200" | "6370309" | "6371419" | "6375129" | "6377218" | "6379052" | "6381642" | "6385374" | "6385381" | "6389214" | "6397166" | "6398149" | "6406314" | "6410850" | "6411767" | "6412986" | "6418262" | "6419519" | "6424781" | "6425694" | "6427045" | "6431762" | "6434313" | "6438310" | "6452925" | "6456773" | "6464402" | "6466724" | "6469905" | "6478472" | "6480487" | "6480660" | "6483977" | "6484958" | "6494550" | "6496640" | "6504988" | "6507980" | "6510274" | "6532332" | "6533472" | "6535397" | "6535682" | "6539147" | "6539160" | "6542688" | "6544075" | "6550977" | "6554485" | "6560334" | "6567601" | "6568542" | "6571048" | "6577595" | "6577801" | "6579014" | "6584267" | "6585423" | "6587630" | "6588938" | "6591051" | "6591053" | "6592266" | "6597670" | "6600106" | "6600866" | "6601997" | "6612515" | "6612874" | "6614978" | "6614980" | "6621975" | "6622873" | "6624389" | "6625374" | "6625375" | "6631237" | "6640042" | "6644863" | "6647197" | "6648520" | "6654536" | "6668127" | "6669149" | "6677520" | "6679604" | "6684005" | "6687450" | "6693552" | "6695620" | "6701056" | "6710366").PN. OR ("6715619" | "6719149" | "6721482" | "6741784" | "6741785" | "6746037" | "6748154" | "6748155" | "6758600" | "6768860" | "6771861" | "6773297" | "6778525" | "6778752" | "6786647" | "6786743" | "6786896" | "6788871" | "6792190" | "6798751" | "6804447" | "6810194" | "6813412" | "6816660" | "6818834" | "6819856" | "6819857" | "6822874" | "6826174" | "6826346" | "6826631" | "6830489" | "6839428" | "6839438" | "6840815" | "6845207" |				

		"6847614" | "6848862" | "6850685" | "6853637" | "6854894" | "6856334" | "6856505" | "6863444" | "6865331" | "6865334" | "6866541" | "6868216" | "6869227" | "6870734" | "6870997" | "6879545" | "6915058" | "6920273" | "6920274" | "6923406" | "6925241" | "6934451" | "6934456" | "6935598" | "6937807" | "6944383" | "6944389" | "6945701" | "6952530" | "6963690" | "6968107" | "6968111" | "6985665" | "6993237" | "7000784" | "7005582" | "7006748" | "7007296" | "7025275" | "7027695" | "7027706" | "7031588" | "7035510" | "7038137" | "7048447" | "7054513" | "7066748" | "7068907" | "7070459" | "7077710" | "7079744" | "7090406" | "7090407" | "7094095" | "7097047" | "7101093" | "7102884" | "7103255" | "7110654" | "7111990" | "7113679" | "7113686" | "7113687" | "7116491" | "7116883" | "7118281" | "7118405" | "7120347" | "7120348" | "7120349" | "7127143" | "7128471" | "7136555" | "7139462" | "7140903" | "7147383" | "7170466" | "7171099" | "7171121" | "7181142" | "7186134" | "7193783" | "7194181" | "7195521" | "7200314" | "7200316" | "7201595" | "7217040" | "7218526").PN. OR ("7220065" | "7221832" | "7228036" | "7228047" | "7231125" | "7234878" | "7236677" | "7239789" | "7245809" | "7259325" | "7266283" | "7270485" | "7272291" | "7274852" | "7284785" | "7287913" | "7289731" | "7292769" | "7298950" | "7300216" | "7300308" | "7302149" | "7302153" | "7302154" | "7308184" | "7310471" | "7310472" | "7315681" | "7325975" | "7330624" | "7330625" | "7330626" | "7330629" | "7331718" | "7340145" | "7349615" | "7352946" | "7352947" | "7373071" | "7376321" | "7376323" | "7391952" | "7397996" | "7400813" | "7404736" | "7409137" | "7414198" | "7417188" | "7418182" | "7418184" | "7421182" | "7428363" | "7435090" | "7437049" | "7439453" | "7454113" | "7460757" | "7460758" |				

		"7461981" | "7462779" | "7463810" | "7463811" | "7469090" | "7471867" | "7474828" | "7477824" | "7477826" | "7480438" | "7488205" | "7493002" | "7496269" | "7499622" | "7499623" | "7507111" | "7509015" | "7509016" | "7510421" | "7522804" | "7523898" | "7526171" | "7526172" | "7526174" | "7529458" | "7534958" | "7536075" | "7540666" | "7542645" | "7544085" | "7552899" | "7555193" | "7558458" | "7565051" | "7567744" | "7570860" | "7570861" | "7577331" | "7596293" | "7603020" | "7607938" | "7609967" | "7613377" | "7614903" | "7620272" | "7620287" | "7641398" | "7668430" | "7668433" | "7672561" | "7676135" | "7689079" | "7694926" | "7697811" | "7706294" | "7715125" | "7715683" | "7734138" | "7740409" | "7743495" | "7751674" | "7751675" | "7756371" | "7756382" | "7760984" | "7764858" | "7764859").PN. OR ("7769266" | "7805044" | "7809232" | "7809235" | "7811136" | "7822310" | "7837495" | "7850372" | "7853112" | "7856166" | "7862369" | "7869685" | "7876580" | "7899298" | "7914332" | "7942589" | "7945135" | "7945136" | "7945138" | "7970250" | "7991252" | "8009959" | "8014171" | "8014646" | "8020813" | "8059932" | "8093499" | "8107785" | "8131126" | "8184938" | "8206043" | "8206058" | "8220881" | "8226305" | "8249410" | "8251591" | "8270798" | "8280216" | "8285104" | "8301004" | "8331752" | "8353494" | "8369679" | "8391666" | "8472773" | "8491331" | "8528872" | "8537477" | "8538226" | "8559783" | "D330368" | "D448005" | "D466087" | "Entry 3 of 73 File:" | "RE34955" | "RE37489" | "RE38311").PN. OR ("8913866").URPN.				
S13	73	("8285104").URPN.	USPAT	OR	ON	2019/12/17 11:24

S12	194	("20060018622" | "20080089656" | "20080175552" | "20090245743" | "20100051886" | "20100052346" | "20100054684" | "20100296791" | "20100310225" | "20100316334" | "20100322580" | "20100322581" | "20100322582" | "20100322583" | "20110268405" | "20110268406" | "20110268408" | "20110268410" | "20110268411" | "20110274402" | "20120114295" | "20130011105" | "20130028567" | "20130121657" | "20130148935" | "20130214662" | "20130251319" | "20130251326" | "20130287357" | "20140010511" | "20140079365" | "20160033732" | "20160062050" | "20160062055" | "20160062058" | "20160062068" | "20160299308" | "2056219" | "2550339" | "3392543" | "3478535" | "4034572" | "4266853" | "4585303" | "4655521" | "4792203" | "4824196" | "4846565" | "4986762" | "5046811" | "5129030" | "5142606" | "5167001" | "5212761" | "5325455" | "5339379" | "5370541" | "5442726" | "5448670" | "5490229" | "5497444" | "5511144" | "5647043" | "5717810" | "5758003" | "5804765" | "5836786" | "5902155" | "5946440" | "5978540" | "6017238" | "6080011" | "6085003" | "6086415" | "6095852" | "6109978" | "6167183" | "6203130" | "6210216" | "6356697" | "6396992" | "6591051" | "6768860" | "6769551" | "6771861" | "6788846" | "6920274" | "6944389" | "6946600" | "6974438" | "7000784" | "7031588" | "7087840" | "7113687" | "7147383" | "7200314" | "7200316" | "7318321" | "7320507" | "7330629" | "7376321" | "7416347" | "7418182" | "7509015" | "7529458" | "7532799" | "7570861" | "7628644" | "7672561" | "7681187" | "7682187" | "7686518").PN. OR ("7689089" | "7722411" | "7729586" | "7744176" | "7756378" | "7756380" | "7760983" | "7826705" | "7854333" | "7856166" | "7876995" | "7887244" | "7889961" | "7903925" | "7945135" | "7945136" | "7962000" |	US-PGPUB; USPAT; USOCR	OR	ON	2019/12/17 11:13

		"7974105" | "7979985" | "8014646" | "8038015" | "8038354" | "8061534" | "8075198" | "8075344" | "8121458" | "8135257" | "8154886" | "8179684" | "8184938" | "8203450" | "8254742" | "8280216" | "8285104" | "8290332" | "8290333" | "8297854" | "8301004" | "8326107" | "8331752" | "8403599" | "8411465" | "8418974" | "8433171" | "8437147" | "8437597" | "8452148" | "8452149" | "8472776" | "8520996" | "8538226" | "8559783" | "8565572" | "8625950" | "8625951" | "8705926" | "8712206" | "8746466" | "8867883" | "8879881" | "8934253" | "8938147" | "8953924" | "8965168" | "8992099" | "9008485" | "9020320" | "9075216" | "9075217" | "9116324" | "9140870" | "9170392" | "9213161" | "9213363" | "9279951" | "9690065" | "D628462" | "RE40375").PN. OR ("10215944").URPN.				
S11	18	(US-20160062050-$ or US-20160062055-$ or US-20160062058-$ or US-20160062068-$ or US-20170192191-$ or US-20180003912-$ or US-20180100976-$ or US-20190004268-$ or US-20190101717-$ or US-20090290842-$ or US-20160033732-$).did. or (US-10215944-$ or US-10254497-$ or US-9841574-$ or US-4792203-$ or US-8554044-$ or US-4840449-$).did. or (EP-3404461-$).did.	US-PGPUB; USPAT; FPRS	OR	ON	2019/08/07 14:05
S10	17	G02B6/$.cpc. and ((standard adj width) same (module or cassette))	US-PGPUB; USPAT; USOCR; FPRS; EPO; JPO; DERWENT; IBM_TDB	OR	ON	2019/08/07 13:36
S9	12	G02B6/44$.cpc. and (magnet$4 near5 tray)	US-PGPUB; USPAT; USOCR; FPRS; EPO; JPO; DERWENT; IBM_TDB	OR	ON	2019/04/24 11:18

S8	4	G02B6/44$.cpc. and (magnet$4 near5 rail)	US-PGPUB; USPAT; USOCR; FPRS; EPO; JPO; DERWENT; IBM_TDB	OR	ON	2019/04/24 11:17
S7	194	("20060018622" | "20080089656" | "20080175552" | "20090245743" | "20100051886" | "20100052346" | "20100054684" | "20100296791" | "20100310225" | "20100316334" | "20100322580" | "20100322581" | "20100322582" | "20100322583" | "20110268405" | "20110268406" | "20110268408" | "20110268410" | "20110268411" | "20110274402" | "20120114295" | "20130011105" | "20130028567" | "20130121657" | "20130148935" | "20130214662" | "20130251319" | "20130251326" | "20130287357" | "20140010511" | "20140079365" | "20160033732" | "20160062050" | "20160062055" | "20160062058" | "20160062068" | "20160299308" | "2056219" | "2550339" | "3392543" | "3478535" | "4034572" | "4266853" | "4585303" | "4655521" | "4792203" | "4824196" | "4846565" | "4986762" | "5046811" | "5129030" | "5142606" | "5167001" | "5212761" | "5325455" | "5339379" | "5370541" | "5442726" | "5448670" | "5490229" | "5497444" | "5511144" | "5647043" | "5717810" | "5758003" | "5804765" | "5836786" | "5902155" | "5946440" | "5978540" | "6017238" | "6080011" | "6085003" | "6086415" | "6095852" | "6109978" | "6167183" | "6203130" | "6210216" | "6356697" | "6396992" | "6591051" | "6768860" | "6769551" | "6771861" | "6788846" | "6920274" | "6944389" | "6946600" | "6974438" | "7000784" | "7031588" | "7087840" | "7113687" | "7147383" | "7200314" | "7200316" | "7318321" | "7320507" | "7330629" | "7376321" | "7416347" | "7418182" | "7509015" | "7529458" |	US-PGPUB; USPAT; USOCR	OR	ON	2019/04/24 09:32

		"7532799" | "7570861" | "7628644" | "7672561" | "7681187" | "7682187" | "7686518").PN. OR ("7689089" | "7722411" | "7729586" | "7744176" | "7756378" | "7756380" | "7760983" | "7826705" | "7854333" | "7856166" | "7876995" | "7887244" | "7889961" | "7903925" | "7945135" | "7945136" | "7962000" | "7974105" | "7979985" | "8014646" | "8038015" | "8038354" | "8061534" | "8075198" | "8075344" | "8121458" | "8135257" | "8154886" | "8179684" | "8184938" | "8203450" | "8254742" | "8280216" | "8285104" | "8290332" | "8290333" | "8297854" | "8301004" | "8326107" | "8331752" | "8403599" | "8411465" | "8418974" | "8433171" | "8437147" | "8437597" | "8452148" | "8452149" | "8472776" | "8520996" | "8538226" | "8559783" | "8565572" | "8625950" | "8625951" | "8705926" | "8712206" | "8746466" | "8867883" | "8879881" | "8934253" | "8938147" | "8953924" | "8965168" | "8992099" | "9008485" | "9020320" | "9075216" | "9075217" | "9116324" | "9140870" | "9170392" | "9213161" | "9213363" | "9279951" | "9690065" | "D628462" | "RE40375").PN. OR ("10215944").URPN.				
S6	2789	S4 not S5	US-PGPUB; USPAT; USOCR; FPRS; EPO; JPO; DERWENT; IBM_TDB	OR	ON	2019/04/23 20:02
S5	25	S4 and magnet$4	US-PGPUB; USPAT; USOCR; FPRS; EPO; JPO; DERWENT; IBM_TDB	OR	ON	2019/04/23 19:57
S4	2814	G02B6/4455.cpc. not S1	US-PGPUB; USPAT; USOCR;	OR	ON	2019/04/23 19:55

			FPRS; EPO; JPO; DERWENT; IBM_TDB			
S3	15	((("PILON") near3 ("VINCENT"))).INV.	US-PGPUB; USPAT; USOCR; EPO; JPO; DERWENT	OR	ON	2019/04/23 19:13
S2	44	((("BELDEN") near3 ("CANADA") near3 ("INC"))).AS,AANM.	USPAT	OR	ON	2019/04/23 19:12
S1	218	G02B6/4455.cpc. and modular	US-PGPUB; USPAT; USOCR; FPRS; EPO; JPO; DERWENT; IBM_TDB	OR	ON	2019/04/23 18:55

EAST Search History (Interference)

Ref #	Hits	Search Query	DBs	Default Operator	Plurals	Time Stamp
L16	7	(tray and cassette and (fiber or fibre) and optic$4 and width and (fasten$4 or lock$4 or secur$4 or attach$4 or fix$4)).clm.	US-PGPUB; USPAT	OR	ON	2020/05/18 10:49
L15	3	(tray and cassette and (fiber or fibre) and optic$4 and standard and width and (fasten$4 or lock$4 or secur$4 or attach$4 or fix$4)).clm.	US-PGPUB; USPAT	OR	ON	2020/05/18 10:48
S23	72	((cassette or module) and metal$4 and optic$4 and (fiber or fibre) and magnet$4 and (tray or housing or drawer or slide)).clm.	US-PGPUB; USPAT	OR	ON	2019/12/17 16:33

5/18/2020 10:51:05 AM
C:\Users\rpeace\Documents\EAST\Workspaces\16143831.wsp

Bibliographic Data

Application No: 16/143,831

Foreign Priority claimed: ○ Yes ◉ No

35 USC 119 (a-d) conditions met: ☐ Yes ☑ No | ☐ Met After Allowance

Verified and Acknowledged: /RHONDA S PEACE/ | Examiner's Signature | Initials

Title: MODULAR FIBER OPTIC CASSETTE, SYSTEM AND METHOD

FILING or 371(c) DATE	CLASS	GROUP ART UNIT	ATTORNEY DOCKET NO.
09/27/2018 **RULE**	385	2874	771/13569.451

APPLICANTS

BELDEN CANADA INC., Saint-laurent, CANADA

INVENTORS

VINCENT PILON LACHINE, CANADA

CONTINUING DATA

This application has PRO of 62567339 10/03/2017

FOREIGN APPLICATIONS

IF REQUIRED, FOREIGN LICENSE GRANTED**

10/17/2018

STATE OR COUNTRY

CANADA

ADDRESS

Lavery, De Billy, LLP
1 Place Ville Marie, Suite 4000
Montreal, QC H3B 4M4
CANADA

FILING FEE RECEIVED

$1,880

FEE ADDRESS INDICATION FORM

Application Number	16143831	Art Unit	2874
Filing Date	27-Sep-2018	Examiner Name	RHONDA PEACE
First Name Inventor	VINCENT PILON	Attorney Doc. Number	771/13569.451

INSTRUCTIONS: In order for the fee address identified on this form to be effective, the issue fee must have been paid for the application listed on this form. Only an address represented by a customer number can be established as the fee address for maintenance fee purposes (hereafter, fee address). A fee address should be established when correspondence related to maintenance fees should be mailed to a different address than the correspondence address for the application. For more information on customer numbers, see the Manual of Patent Examining Procedure (MPEP) § 403.

Please recognize as the Fee Address under the provisions of 37 CFR 1.363 the address associated with:

Customer Number:	25545 Lavery, De Billy, LLP 1 Place Ville Marie, Suite 4000 Montreal QC H3B 4M4 CANADA 514-397-5119 uspto@lavery.ca

Signature :

I certify, in accordance with 37 CFR 1.4(d)(4) that I am an attorney or agent registered to practice before the Patent and Trademark Office who has filed and has been granted power of attorney in this application.

Signature	/HUGH MANSFIELD/	**Date**	08-31-2020
Name	Hugh Mansfield	**Registration Number**	55757

Electronic Patent Application Fee Transmittal

Application Number:	16143831
Filing Date:	27-Sep-2018
Title of Invention:	MODULAR FIBER OPTIC CASSETTE, SYSTEM AND METHOD
First Named Inventor/Applicant Name:	VINCENT PILON
Filer:	Hugh Mansfield/Regeline Jean Francois
Attorney Docket Number:	771/13569.451

Filed as Large Entity

Filing Fees for Utility under 35 USC 111(a)

Description	Fee Code	Quantity	Amount	Sub-Total in USD($)
Basic Filing:				
UTILITY APPL ISSUE FEE	1501	1	1000	1000
PUBL. FEE- EARLY, VOLUNTARY, OR NORMAL	1504	1	0	0
Pages:				
Claims:				
Miscellaneous-Filing:				
Petition:				
Patent-Appeals-and-Interference:				

Description	Fee Code	Quantity	Amount	Sub-Total in USD($)
Post-Allowance-and-Post-Issuance:				
Extension-of-Time:				
Miscellaneous:				
		Total in USD ($)		**1000**

Electronic Acknowledgement Receipt	
EFS ID:	40433156
Application Number:	16143831
International Application Number:	
Confirmation Number:	4901
Title of Invention:	MODULAR FIBER OPTIC CASSETTE, SYSTEM AND METHOD
First Named Inventor/Applicant Name:	VINCENT PILON
Customer Number:	25545
Filer:	Hugh Mansfield/Regeline Jean Francois
Filer Authorized By:	Hugh Mansfield
Attorney Docket Number:	771/13569.451
Receipt Date:	31-AUG-2020
Filing Date:	27-SEP-2018
Time Stamp:	18:16:36
Application Type:	Utility under 35 USC 111(a)

Payment information:

Submitted with Payment	yes
Payment Type	CARD
Payment was successfully received in RAM	$1000
RAM confirmation Number	E20208UI16336161
Deposit Account	
Authorized User	
The Director of the USPTO is hereby authorized to charge indicated fees and credit any overpayment as follows:	

File Listing:

Document Number	Document Description	File Name	File Size(Bytes)/ Message Digest	Multi Part /.zip	Pages (if appl.)
1	Issue Fee Payment (PTO-85B)	Web85b.pdf	45890 d56aebef115b2a2babfc0d49d684f98c04868dc9	no	2
Warnings:					
Information:					
2	Maintenance Fee Address Change	web85feeaddress.pdf	32759 f19095e2bf4ef7edd3ef2611d8320a05f2382319	no	1
Warnings:					
Information:					
3	Fee Worksheet (SB06)	fee-info.pdf	31991 3cbfc9f729034c9aa9c377e58e8c9498f7eae916	no	2
Warnings:					
Information:					
			Total Files Size (in bytes):	110640	

This Acknowledgement Receipt evidences receipt on the noted date by the USPTO of the indicated documents, characterized by the applicant, and including page counts, where applicable. It serves as evidence of receipt similar to a Post Card, as described in MPEP 503.

<u>New Applications Under 35 U.S.C. 111</u>
If a new application is being filed and the application includes the necessary components for a filing date (see 37 CFR 1.53(b)-(d) and MPEP 506), a Filing Receipt (37 CFR 1.54) will be issued in due course and the date shown on this Acknowledgement Receipt will establish the filing date of the application.
<u>National Stage of an International Application under 35 U.S.C. 371</u>
If a timely submission to enter the national stage of an international application is compliant with the conditions of 35 U.S.C. 371 and other applicable requirements a Form PCT/DO/EO/903 indicating acceptance of the application as a national stage submission under 35 U.S.C. 371 will be issued in addition to the Filing Receipt, in due course.
<u>New International Application Filed with the USPTO as a Receiving Office</u>
If a new international application is being filed and the international application includes the necessary components for an international filing date (see PCT Article 11 and MPEP 1810), a Notification of the International Application Number and of the International Filing Date (Form PCT/RO/105) will be issued in due course, subject to prescriptions concerning national security, and the date shown on this Acknowledgement Receipt will establish the international filing date of the application.

Document Description: Issue Fee Payment (PTO-85B)

Issue Fee Transmittal Form

Application Number	Filing Date	First Named Inventor	Atty. Docket No.	Confirmation No.
16143831	27-Sep-2018	VINCENT PILON	771/13569.451	4901

TITLE OF INVENTION :

MODULAR FIBER OPTIC CASSETTE, SYSTEM AND METHOD

Entity Status	Application Type	Art Unit	Class - Subclass	EXAMINER
Regular Undiscounted	Utility under 35 USC 111(a)	2874	135000	RHONDA PEACE

Issue Fee Due	Publication Due	Total Fee(s) Due	Date Due	Prev. Paid Fee
$1000	$0	$1000	01-Sep-2020	$0

1.Change of Correspondence Address and/or Indication Of Fee Address (37 CFR 1.33 & 1.363)

Current Correspondence Address:	Current Indicated Fee Address :
25545 Lavery, De Billy, LLP 1 Place Ville Marie, Suite 4000 Montreal QC H3B 4M4 CANADA 514-397-5119 uspto@lavery.ca	
☐ Change of correspondence address requested, system generated AIA/122-EFS form attached	☒ Fee Address indication requested, system generated SB/47-EFS form attached

2.Entity Status

Change in Entity Status

○ Applicant certifying micro entity status; system generated Micro Entity certification form attached. See 37 CFR 1.29.
Note: Absent a valid certification of micro entity status, issue fee payment in the micro entity amount will not be accepted at the risk of application abandonment. If this box is checked, you will be prompted to choose a micro entity status on the gross income basis (37 CFR 1.29(a)) or the institution of higher education basis (37 CFR 1.29(d)), and make the applicable certification online.

○ Applicant asserting small entity status. See 37 CFR 1.27.
Note: If the application was previously under micro entity status, checking this box will be taken to be a notification of loss of entitlement to micro entity status.

◉ Applicant changing to regular undiscounted fee status.
Note: Checking this box will be taken to be a notification of loss of entitlement to small or micro entity status, as applicable.

3.The Following Fee(s) Are Submitted:

☒ Issue Fee	☐ I authorize USPTO to apply my previously paid issue fee to the current fees due
☐ Publication Fee	☐ The Director is hereby authorized to apply my previously paid issue fee to the current fee due and to charge deficient fees to Deposit Account Number _____
☐ Advance Order - # of copies _____	☐ If i**n addition to** the payment of the issue fee amount submitted with this form, there are any discrepancies in any amount(s) due, the Director is authorized to charge any deficiency, or credit any overpayment, to Deposit Account Number _____ . The **issue fee must be submitted** with this form. **If payment of the issue fee does not accompany this form, checking this box and providing a deposit account number will NOT be effective to satisfy full payment of the fee(s) due.**

4.Firm and/or Attorney Names To Be Printed

NOTE: If no name is listed, no name will be printed
For printing on the patent front page, list to be displayed as entered

1. LAVERY, DE BILLY, LLP
2. HUGH MANSFIELD
3.

5.Assignee Name(s) and Residence Data To Be Printed

PLEASE NOTE: Unless an assignee is identified below, no assignee data will appear on the patent. If an assignee is identified below, the document has been filed for recordation as set forth in 37 CFR 3.11. Completion of this form is NOT a substitute for filing an assignment.

Name	City	State	Country	Category
BELDEN CANADA ULC			united states	corporation

6.Signature

I certify, in accordance with 37 CFR 1.4(d)(4) that I am an attorney or agent registered to practice before the Patent and Trademark Office who has filed and has been granted power of attorney in this application. I also certify that this Fee(s) Transmittal form is being transmitted to the USPTO via EFS-WEB on the date indicated below.

Signature	/HUGH MANSFIELD/	**Date**	08-31-2020
Name	Hugh Mansfield	**Registration Number**	55757

PTO/AIA/80 (07-12)
Approved for use through 11/30/2014. OMB 0651-0035
U.S. Patent and Trademark Office; U.S DEPARTMENT OF COMMERCE
Under the Paperwork Reduction Act of 1995, no persons are required to respond to a collection of information unless it displays a valid OMB control number.

POWER OF ATTORNEY TO PROSECUTE APPLICATIONS BEFORE THE USPTO

I hereby revoke all previous powers of attorney given in the application identified in the attached statement under 37 CFR 3.73(c).

I hereby appoint:

[X] Practitioners associated with Customer Number: 25545

OR

[ ] Practitioner(s) named below (if more than ten patent practitioners are to be named, then a customer number must be used):

Name	Registration Number	Name	Registration Number

As attorney(s) or agent(s) to represent the undersigned before the United States Patent and Trademark Office (USPTO) in connection with any and all patent applications assigned only to the undersigned according to the USPTO assignment records or assignments documents attached to this form in accordance with 37 CFR 3.73(c).

Please change the correspondence address for the application identified in the attached statement under 37 CFR 3.73(c) to:

[X] The address associated with Customer Number: 25545

OR

[ ]

Firm or Individual Name			
Address			
City		State	Zip
Country			
Telephone		Email	

Assignee Name and Address: Belden Canada ULC
2310 Alfred-Nobel
Saint-Laurent, Quebec Canada H4S 2B4

A copy of this form, together with a statement under 37 CFR 3.73(c) (Form PTO/AIA/96 or equivalent) is required to be Filed in each application in which this form is used. The statement under 37 CFR 3.73(c) may be completed by one of The practitioners appointed in this form, and must identify the application in which this Power of Attorney is to be filed.

SIGNATURE of Assignee of Record

The individual whose signature and title is supplied below is authorized to act on behalf of the assignee

Signature	B. E. Ad	Date	August 31, 2020
Name	Brian E. Anderson	Telephone	314-854-8035
Title	Secretary		

This collection of information is required by 37 CFR 1.31, 1.32 and 1.33. The information is required to obtain or retain a benefit by the public which is to file (and by the USPTO to process) an application. Confidentiality is governed by 35 U.S.C. 122 and 37 CFR 1.11 and 1.14. This collection is estimated to take 3 minutes to complete, including gathering, preparing, and submitting the completed application form to the USPTO. Time will vary depending upon the individual case. Any comments on the amount of time you require to complete this form and/or suggestions for reducing this burden, should be sent to the Chief Information Officer, U.S. Patent and Trademark Office, U.S. Department of Commerce, P.O. Box 1450, Alexandria, VA 22313-1450. DO NOT SEND FEES OR COMPLETED FORMS TO THIS ADDRESS. **SEND TO: Commissioner for Patents, P.O. Box 1450, Alexandria, VA 22313-1450.**

If you need assistance in completing the form, call 1-800-PTO-9199 and select option 2.

PTO/AIA/96 (08-12)
Approved for use through 01/31/2013. OMB 0651-0031
U.S. Patent and Trademark Office; U.S. DEPARTMENT OF COMMERCE
Under the Paperwork Reduction Act of 1995, no persons are required to respond to a collection of information unless it displays a valid OMB control number.

STATEMENT UNDER 37 CFR 3.73(c)

Applicant/Patent Owner: BELDEN CANADA ULC

Application No./Patent No.: 16/143,831 Filed/Issue Date: September 27, 2018

Titled: MODULAR FIBER OPTIC CASSETTE, SYSTEM AND METHOD

BELDEN CANADA ULC, a Corporation

(Name of Assignee) (Type of Assignee, e.g., corporation, partnership, university, government agency, etc.)

states that, for the patent application/patent identified above, it is (choose **one** of options 1, 2, 3 or 4 below):

1. ☑ The assignee of the entire right, title, and interest.

2. ☐ An assignee of less than the entire right, title, and interest (check applicable box):

☐ The extent (by percentage) of its ownership interest is _____%. Additional Statement(s) by the owners holding the balance of the interest must be submitted to account for 100% of the ownership interest.

☐ There are unspecified percentages of ownership. The other parties, including inventors, who together own the entire right, title and interest are:

Additional Statement(s) by the owner(s) holding the balance of the interest must be submitted to account for the entire right, title, and interest.

3. ☐ The assignee of an undivided interest in the entirety (a complete assignment from one of the joint inventors was made). The other parties, including inventors, who together own the entire right, title, and interest are:

Additional Statement(s) by the owner(s) holding the balance of the interest must be submitted to account for the entire right, title, and interest.

4. ☐ The recipient, via a court proceeding or the like (*e.g.*, bankruptcy, probate), of an undivided interest in the entirety (a complete transfer of ownership interest was made). The certified document(s) showing the transfer is attached.

The interest identified in option 1, 2 or 3 above (not option 4) is evidenced by either (choose **one** of options A or B below):

A. ☐ An assignment from the inventor(s) of the patent application/patent identified above. The assignment was recorded in the United States Patent and Trademark Office at Reel _____, Frame _____, or for which a copy thereof is attached.

B. ☑ A chain of title from the inventor(s), of the patent application/patent identified above, to the current assignee as follows:

1. From: Vincent PILON To: Belden Canada Inc.

The document was recorded in the United States Patent and Trademark Office at Reel 047254, Frame 0973, or for which a copy thereof is attached.

2. From: Belden Canada Inc. To: Belden Canada ULC

The document was recorded in the United States Patent and Trademark Office at Reel 053639, Frame 0483, or for which a copy thereof is attached.

This collection of information is required by 37 CFR 3.73(b). The information is required to obtain or retain a benefit by the public which is to file (and by the USPTO to process) an application. Confidentiality is governed by 35 U.S.C. 122 and 37 CFR 1.11 and 1.14. This collection is estimated to take 12 minutes to complete, including gathering, preparing, and submitting the completed application form to the USPTO. Time will vary depending upon the individual case. Any comments on the amount of time you require to complete this form and/or suggestions for reducing this burden, should be sent to the Chief Information Officer, U.S. Patent and Trademark Office, U.S. Department of Commerce, P.O. Box 1450, Alexandria, VA 22313-1450. DO NOT SEND FEES OR COMPLETED FORMS TO THIS ADDRESS. **SEND TO: Commissioner for Patents, P.O. Box 1450, Alexandria, VA 22313-1450.**

If you need assistance in completing the form, call 1-800-PTO-9199 and select option 2.

PTO/AIA/96 (08-12)
Approved for use through 01/31/2013. OMB 0651-0031
U.S. Patent and Trademark Office; U.S. DEPARTMENT OF COMMERCE
Under the Paperwork Reduction Act of 1995, no persons are required to respond to a collection of information unless it displays a valid OMB control number.

STATEMENT UNDER 37 CFR 3.73(c)

3. From: _____ To: _____

The document was recorded in the United States Patent and Trademark Office at

Reel _____, Frame _____, or for which a copy thereof is attached.

4. From: _____ To: _____

The document was recorded in the United States Patent and Trademark Office at

Reel _____, Frame _____, or for which a copy thereof is attached.

5. From: _____ To: _____

The document was recorded in the United States Patent and Trademark Office at

Reel _____, Frame _____, or for which a copy thereof is attached.

6. From: _____ To: _____

The document was recorded in the United States Patent and Trademark Office at

Reel _____, Frame _____, or for which a copy thereof is attached.

☐ Additional documents in the chain of title are listed on a supplemental sheet(s).

☑ As required by 37 CFR 3.73(c)(1)(i), the documentary evidence of the chain of title from the original owner to the assignee was, or concurrently is being, submitted for recordation pursuant to 37 CFR 3.11.

[NOTE: A separate copy (i.e., a true copy of the original assignment document(s)) must be submitted to Assignment Division in accordance with 37 CFR Part 3, to record the assignment in the records of the USPTO. See MPEP 302.08]

The undersigned (whose title is supplied below) is authorized to act on behalf of the assignee.

/Hugh Mansfield/	September 1, 2020
Signature	Date
Hugh Mansfield	55757
Printed or Typed Name	Title or Registration Number

Privacy Act Statement

The **Privacy Act of 1974 (P.L. 93-579)** requires that you be given certain information in connection with your submission of the attached form related to a patent application or patent. Accordingly, pursuant to the requirements of the Act, please be advised that: (1) the general authority for the collection of this information is 35 U.S.C. 2(b)(2); (2) furnishing of the information solicited is voluntary; and (3) the principal purpose for which the information is used by the U.S. Patent and Trademark Office is to process and/or examine your submission related to a patent application or patent. If you do not furnish the requested information, the U.S. Patent and Trademark Office may not be able to process and/or examine your submission, which may result in termination of proceedings or abandonment of the application or expiration of the patent.

The information provided by you in this form will be subject to the following routine uses:

1. The information on this form will be treated confidentially to the extent allowed under the Freedom of Information Act (5 U.S.C. 552) and the Privacy Act (5 U.S.C 552a). Records from this system of records may be disclosed to the Department of Justice to determine whether disclosure of these records is required by the Freedom of Information Act.
2. A record from this system of records may be disclosed, as a routine use, in the course of presenting evidence to a court, magistrate, or administrative tribunal, including disclosures to opposing counsel in the course of settlement negotiations.
3. A record in this system of records may be disclosed, as a routine use, to a Member of Congress submitting a request involving an individual, to whom the record pertains, when the individual has requested assistance from the Member with respect to the subject matter of the record.
4. A record in this system of records may be disclosed, as a routine use, to a contractor of the Agency having need for the information in order to perform a contract. Recipients of information shall be required to comply with the requirements of the Privacy Act of 1974, as amended, pursuant to 5 U.S.C. 552a(m).
5. A record related to an International Application filed under the Patent Cooperation Treaty in this system of records may be disclosed, as a routine use, to the International Bureau of the World Intellectual Property Organization, pursuant to the Patent Cooperation Treaty.
6. A record in this system of records may be disclosed, as a routine use, to another federal agency for purposes of National Security review (35 U.S.C. 181) and for review pursuant to the Atomic Energy Act (42 U.S.C. 218(c)).
7. A record from this system of records may be disclosed, as a routine use, to the Administrator, General Services, or his/her designee, during an inspection of records conducted by GSA as part of that agency's responsibility to recommend improvements in records management practices and programs, under authority of 44 U.S.C. 2904 and 2906. Such disclosure shall be made in accordance with the GSA regulations governing inspection of records for this purpose, and any other relevant (*i.e.*, GSA or Commerce) directive. Such disclosure shall not be used to make determinations about individuals.
8. A record from this system of records may be disclosed, as a routine use, to the public after either publication of the application pursuant to 35 U.S.C. 122(b) or issuance of a patent pursuant to 35 U.S.C. 151. Further, a record may be disclosed, subject to the limitations of 37 CFR 1.14, as a routine use, to the public if the record was filed in an application which became abandoned or in which the proceedings were terminated and which application is referenced by either a published application, an application open to public inspection or an issued patent.
9. A record from this system of records may be disclosed, as a routine use, to a Federal, State, or local law enforcement agency, if the USPTO becomes aware of a violation or potential violation of law or regulation.

CORRECTED APPLICATION DATA SHEET

PTO/AIA/14 (11-15)
Approved for use through 04/30/2017. OMB 0651-0032
U.S. Patent and Trademark Office; U.S. DEPARTMENT OF COMMERCE

Under the Paperwork Reduction Act of 1995, no persons are required to respond to a collection of information unless it contains a valid OMB control number.

~~Application Data Sheet 37 CFR 1.76~~	Attorney Docket Number	771/13569.451
	Application Number	16/143,831
Title of Invention	MODULAR FIBRE OPTIC CASSETTE, SYSTEM AND METHOD	

The application data sheet is part of the provisional or nonprovisional application for which it is being submitted. The following form contains the bibliographic data arranged in a format specified by the United States Patent and Trademark Office as outlined in 37 CFR 1.76.
This document may be completed electronically and submitted to the Office in electronic format using the Electronic Filing System (EFS) or the document may be printed and included in a paper filed application.

Secrecy Order 37 CFR 5.2:

☐ Portions or all of the application associated with this Application Data Sheet may fall under a Secrecy Order pursuant to 37 CFR 5.2 (Paper filers only. Applications that fall under Secrecy Order may not be filed electronically.)

Inventor Information:

Inventor 1 Remove

Legal Name

Prefix	Given Name	Middle Name	Family Name	Suffix
	VINCENT		PILON	

Residence Information (Select One) ○ US Residency ◉ Non US Residency ○ Active US Military Service

City	LACHINE	Country of Residence i	CA

Mailing Address of Inventor:

Address 1	850 40e AVENUE		
Address 2			
City	LACHINE	**State/Province**	QC
Postal Code	H8T 2G6	**Country** i	CA

All Inventors Must Be Listed - Additional Inventor Information blocks may be generated within this form by selecting the **Add** button. Add

Correspondence Information:

Enter either Customer Number or complete the Correspondence Information section below. For further information see 37 CFR 1.33(a).

☐ **An Address is being provided for the correspondence Information of this application.**

Customer Number	25545		
Email Address	hmansfield@lavery.ca	Add Email	Remove Email
Email Address	afovero@lavery.ca	Add Email	Remove Email

Application Information:

Title of the Invention	MODULAR FIBRE OPTIC CASSETTE, SYSTEM AND METHOD		
Attorney Docket Number	771/13569.451	**Small Entity Status Claimed**	☐
Application Type	Nonprovisional		
Subject Matter	Utility		
Total Number of Drawing Sheets (if any)	13	**Suggested Figure for Publication (if any)**	

EFS Web 2.2.12

Under the Paperwork Reduction Act of 1995, no persons are required to respond to a collection of information unless it contains a valid OMB control number.

~~Application Data Sheet 37 CFR 1.76~~	Attorney Docket Number	771/13569.451
	Application Number	16/143,831
Title of Invention	MODULAR FIBRE OPTIC CASSETTE, SYSTEM AND METHOD	

Filing By Reference:

Only complete this section when filing an application by reference under 35 U.S.C. 111(c) and 37 CFR 1.57(a). Do not complete this section if application papers including a specification and any drawings are being filed. Any domestic benefit or foreign priority information must be provided in the appropriate section(s) below (i.e., "Domestic Benefit/National Stage Information" and "Foreign Priority Information").

For the purposes of a filing date under 37 CFR 1.53(b), the description and any drawings of the present application are replaced by this reference to the previously filed application, subject to conditions and requirements of 37 CFR 1.57(a).

Application number of the previously filed application	Filing date (YYYY-MM-DD)	Intellectual Property Authority or Country

Publication Information:

☐ Request Early Publication (Fee required at time of Request 37 CFR 1.219)

☐ **Request Not to Publish.** I hereby request that the attached application not be published under 35 U.S.C. 122(b) and certify that the invention disclosed in the attached application **has not and will not** be the subject of an application filed in another country, or under a multilateral international agreement, that requires publication at eighteen months after filing.

Representative Information:

Representative information should be provided for all practitioners having a power of attorney in the application. Providing this information in the Application Data Sheet does not constitute a power of attorney in the application (see 37 CFR 1.32). Either enter Customer Number or complete the Representative Name section below. If both sections are completed the customer Number will be used for the Representative Information during processing.

Please Select One:	◉ Customer Number	◯ US Patent Practitioner	◯ Limited Recognition (37 CFR 11.9)
Customer Number	25545		

Domestic Benefit/National Stage Information:

This section allows for the applicant to either claim benefit under 35 U.S.C. 119(e), 120, 121, 365(c), or 386(c) or indicate National Stage entry from a PCT application. Providing benefit claim information in the Application Data Sheet constitutes the specific reference required by 35 U.S.C. 119(e) or 120, and 37 CFR 1.78.
When referring to the current application, please leave the "Application Number" field blank.

Prior Application Status	Pending		Remove
Application Number	Continuity Type	Prior Application Number	Filing or 371(c) Date (YYYY-MM-DD)
	Claims benefit of provisional	62567339	2017-10-03

Additional Domestic Benefit/National Stage Data may be generated within this form by selecting the **Add** button.

Under the Paperwork Reduction Act of 1995, no persons are required to respond to a collection of information unless it contains a valid OMB control number.

~~Application Data Sheet 37 CFR 1.76~~	Attorney Docket Number	771/13569.451
	Application Number	16/143,831
Title of Invention	MODULAR FIBRE OPTIC CASSETTE, SYSTEM AND METHOD	

Foreign Priority Information:

This section allows for the applicant to claim priority to a foreign application. Providing this information in the application data sheet constitutes the claim for priority as required by 35 U.S.C. 119(b) and 37 CFR 1.55. When priority is claimed to a foreign application that is eligible for retrieval under the priority document exchange program (PDX)[i] the information will be used by the Office to automatically attempt retrieval pursuant to 37 CFR 1.55(i)(1) and (2). Under the PDX program, applicant bears the ultimate responsibility for ensuring that a copy of the foreign application is received by the Office from the participating foreign intellectual property office, or a certified copy of the foreign priority application is filed, within the time period specified in 37 CFR 1.55(g)(1).

Remove

Application Number	Country[i]	Filing Date (YYYY-MM-DD)	Access Code[j] (if applicable)

Additional Foreign Priority Data may be generated within this form by selecting the **Add** button.

Statement under 37 CFR 1.55 or 1.78 for AIA (First Inventor to File) Transition Applications

☐ This application (1) claims priority to or the benefit of an application filed before March 16, 2013 and (2) also contains, or contained at any time, a claim to a claimed invention that has an effective filing date on or after March 16, 2013.
NOTE: By providing this statement under 37 CFR 1.55 or 1.78, this application, with a filing date on or after March 16, 2013, will be examined under the first inventor to file provisions of the AIA.

~~Application Data Sheet 37 CFR 1.76~~	Attorney Docket Number	771/13569.451
	Application Number	16/143,831
Title of Invention	MODULAR FIBRE OPTIC CASSETTE, SYSTEM AND METHOD	

Authorization or Opt-Out of Authorization to Permit Access:

When this Application Data Sheet is properly signed and filed with the application, applicant has provided written authority to permit a participating foreign intellectual property (IP) office access to the instant application-as-filed (see paragraph A in subsection 1 below) and the European Patent Office (EPO) access to any search results from the instant application (see paragraph B in subsection 1 below).

Should applicant choose not to provide an authorization identified in subsection 1 below, applicant **must opt-out** of the authorization by checking the corresponding box A or B or both in subsection 2 below.

NOTE: This section of the Application Data Sheet is **ONLY** reviewed and processed with the **INITIAL** filing of an application. After the initial filing of an application, an Application Data Sheet cannot be used to provide or rescind authorization for access by a foreign IP office(s). Instead, Form PTO/SB/39 or PTO/SB/69 must be used as appropriate.

1. Authorization to Permit Access by a Foreign Intellectual Property Office(s)

A. Priority Document Exchange (PDX) - Unless box A in subsection 2 (opt-out of authorization) is checked, the undersigned hereby **grants the USPTO authority** to provide the European Patent Office (EPO), the Japan Patent Office (JPO), the Korean Intellectual Property Office (KIPO), the State Intellectual Property Office of the People's Republic of China (SIPO), the World Intellectual Property Organization (WIPO), and any other foreign intellectual property office participating with the USPTO in a bilateral or multilateral priority document exchange agreement in which a foreign application claiming priority to the instant patent application is filed, access to: (1) the instant patent application-as-filed and its related bibliographic data, (2) any foreign or domestic application to which priority or benefit is claimed by the instant application and its related bibliographic data, and (3) the date of filing of this Authorization. See 37 CFR 1.14(h)(1).

B. Search Results from U.S. Application to EPO - Unless box B in subsection 2 (opt-out of authorization) is checked, the undersigned hereby **grants the USPTO authority** to provide the EPO access to the bibliographic data and search results from the instant patent application when a European patent application claiming priority to the instant patent application is filed. See 37 CFR 1.14(h)(2).

The applicant is reminded that the EPO's Rule 141(1) EPC (European Patent Convention) requires applicants to submit a copy of search results from the instant application without delay in a European patent application that claims priority to the instant application.

2. Opt-Out of Authorizations to Permit Access by a Foreign Intellectual Property Office(s)

☐ A. Applicant **DOES NOT** authorize the USPTO to permit a participating foreign IP office access to the instant application-as-filed. If this box is checked, the USPTO will not be providing a participating foreign IP office with any documents and information identified in subsection 1A above.

☐ B. Applicant **DOES NOT** authorize the USPTO to transmit to the EPO any search results from the instant patent application. If this box is checked, the USPTO will not be providing the EPO with search results from the instant application.

NOTE: Once the application has published or is otherwise publicly available, the USPTO may provide access to the application in accordance with 37 CFR 1.14.

Under the Paperwork Reduction Act of 1995, no persons are required to respond to a collection of information unless it contains a valid OMB control number.

~~Application Data Sheet 37 CFR 1.76~~	Attorney Docket Number	771/13569.451
	Application Number	16/143,831
Title of Invention	MODULAR FIBRE OPTIC CASSETTE, SYSTEM AND METHOD	

Applicant Information:

Providing assignment information in this section does not substitute for compliance with any requirement of part 3 of Title 37 of CFR to have an assignment recorded by the Office.

Applicant 1

If the applicant is the inventor (or the remaining joint inventor or inventors under 37 CFR 1.45), this section should not be completed. The information to be provided in this section is the name and address of the legal representative who is the applicant under 37 CFR 1.43; or the name and address of the assignee, person to whom the inventor is under an obligation to assign the invention, or person who otherwise shows sufficient proprietary interest in the matter who is the applicant under 37 CFR 1.46. If the applicant is an applicant under 37 CFR 1.46 (assignee, person to whom the inventor is obligated to assign, or person who otherwise shows sufficient proprietary interest) together with one or more joint inventors, then the joint inventor or inventors who are also the applicant should be identified in this section.

Clear

- (●) Assignee
- ( ) Legal Representative under 35 U.S.C. 117
- ( ) Joint Inventor
- ( ) Person to whom the inventor is obligated to assign.
- ( ) Person who shows sufficient proprietary interest

If applicant is the legal representative, indicate the authority to file the patent application, the inventor is:

Name of the Deceased or Legally Incapacitated Inventor:

If the Applicant is an Organization check here. [x]

Organization Name	~~BELDEN CANADA INC.~~ BELDEN CANADA ULC		
Mailing Address Information For Applicant:			
Address 1	2310 ALFRED-NOBEL		
Address 2			
City	SAINT-LAURENT	**State/Province**	QC
Country	CA	Postal Code	H4S 2B4
Phone Number		Fax Number	
Email Address			

Additional Applicant Data may be generated within this form by selecting the Add button.

Assignee Information including Non-Applicant Assignee Information:

Providing assignment information in this section does not substitute for compliance with any requirement of part 3 of Title 37 of CFR to have an assignment recorded by the Office.

Under the Paperwork Reduction Act of 1995, no persons are required to respond to a collection of information unless it contains a valid OMB control number.

~~Application Data Sheet 37 CFR 1.76~~	Attorney Docket Number	771/13569.451
	Application Number	16/143,831
Title of Invention	MODULAR FIBRE OPTIC CASSETTE, SYSTEM AND METHOD	

Assignee 1

Complete this section if assignee information, including non-applicant assignee information, is desired to be included on the patent application publication. An assignee-applicant identified in the "Applicant Information" section will appear on the patent application publication as an applicant. For an assignee-applicant, complete this section only if identification as an assignee is also desired on the patent application publication.

If the Assignee or Non-Applicant Assignee is an Organization check here. ☐

Prefix	**Given Name**	Middle Name	**Family Name**	Suffix

Mailing Address Information For Assignee including Non-Applicant Assignee:

Address 1			
Address 2			
City		**State/Province**	
Country i		Postal Code	
Phone Number		Fax Number	
Email Address			

Additional Assignee or Non-Applicant Assignee Data may be generated within this form by selecting the Add button.

Signature:

NOTE: This Application Data Sheet must be signed in accordance with 37 CFR 1.33(b). **However, if this Application Data Sheet is submitted with the INITIAL filing of the application and either box A or B is not checked in subsection 2 of the "Authorization or Opt-Out of Authorization to Permit Access" section, then this form must also be signed in accordance with 37 CFR 1.14(c).**

This Application Data Sheet **must** be signed by a patent practitioner if one or more of the applicants is a **juristic entity** (e.g., corporation or association). If the applicant is two or more joint inventors, this form must be signed by a patent practitioner, **all** joint inventors who are the applicant, or one or more joint inventor-applicants who have been given power of attorney (e.g., see USPTO Form PTO/AIA/81) on behalf of **all** joint inventor-applicants.

See 37 CFR 1.4(d) for the manner of making signatures and certifications.

Signature	~~/HUGH MANSFIELD/~~ /HUGH MANSFIELD/			Date (YYYY-MM-DD)	~~2018-09-27~~ 2020-09-01
First Name	~~HUGH~~ Hugh	Last Name	~~MANSFIELD~~ Mansfield	Registration Number	~~55757~~ 55757

Additional Signature may be generated within this form by selecting the Add button.

CORRECTED APPLICATION DATA SHEET

PTO/AIA/14 (11-15)
Approved for use through 04/30/2017. OMB 0651-0032
U.S. Patent and Trademark Office; U.S. DEPARTMENT OF COMMERCE
Under the Paperwork Reduction Act of 1995, no persons are required to respond to a collection of information unless it contains a valid OMB control number.

~~Application Data Sheet 37 CFR 1.76~~	Attorney Docket Number	771/13569.451
	Application Number	16/143,831
Title of Invention	MODULAR FIBRE OPTIC CASSETTE, SYSTEM AND METHOD	

This collection of information is required by 37 CFR 1.76. The information is required to obtain or retain a benefit by the public which is to file (and by the USPTO to process) an application. Confidentiality is governed by 35 U.S.C. 122 and 37 CFR 1.14. This collection is estimated to take 23 minutes to complete, including gathering, preparing, and submitting the completed application data sheet form to the USPTO. Time will vary depending upon the individual case. Any comments on the amount of time you require to complete this form and/or suggestions for reducing this burden, should be sent to the Chief Information Officer, U.S. Patent and Trademark Office, U.S. Department of Commerce, P.O. Box 1450, Alexandria, VA 22313-1450. DO NOT SEND FEES OR COMPLETED FORMS TO THIS ADDRESS. **SEND TO: Commissioner for Patents, P.O. Box 1450, Alexandria, VA 22313-1450.**

Privacy Act Statement

The Privacy Act of 1974 (P.L. 93-579) requires that you be given certain information in connection with your submission of the attached form related to a patent application or patent. Accordingly, pursuant to the requirements of the Act, please be advised that: (1) the general authority for the collection of this information is 35 U.S.C. 2(b)(2); (2) furnishing of the information solicited is voluntary; and (3) the principal purpose for which the information is used by the U.S. Patent and Trademark Office is to process and/or examine your submission related to a patent application or patent. If you do not furnish the requested information, the U.S. Patent and Trademark Office may not be able to process and/or examine your submission, which may result in termination of proceedings or abandonment of the application or expiration of the patent.

The information provided by you in this form will be subject to the following routine uses:

1 The information on this form will be treated confidentially to the extent allowed under the Freedom of Information Act (5 U.S.C. 552) and the Privacy Act (5 U.S.C. 552a). Records from this system of records may be disclosed to the Department of Justice to determine whether the Freedom of Information Act requires disclosure of these records.

2. A record from this system of records may be disclosed, as a routine use, in the course of presenting evidence to a court, magistrate, or administrative tribunal, including disclosures to opposing counsel in the course of settlement negotiations.

3 A record in this system of records may be disclosed, as a routine use, to a Member of Congress submitting a request involving an individual, to whom the record pertains, when the individual has requested assistance from the Member with respect to the subject matter of the record.

4. A record in this system of records may be disclosed, as a routine use, to a contractor of the Agency having need for the information in order to perform a contract. Recipients of information shall be required to comply with the requirements of the Privacy Act of 1974, as amended, pursuant to 5 U.S.C. 552a(m).

5. A record related to an International Application filed under the Patent Cooperation Treaty in this system of records may be disclosed, as a routine use, to the International Bureau of the World Intellectual Property Organization, pursuant to the Patent CooperationTreaty.

6. A record in this system of records may be disclosed, as a routine use, to another federal agency for purposes of National Security review (35 U.S.C. 181) and for review pursuant to the Atomic Energy Act (42 U.S.C. 218(c)).

7. A record from this system of records may be disclosed, as a routine use, to the Administrator, General Services, or his/her designee, during an inspection of records conducted by GSA as part of that agency's responsibility to recommend improvements in records management practices and programs, under authority of 44 U.S.C. 2904 and 2906. Such disclosure shall be made in accordance with the GSA regulations governing inspection of records for this purpose, and any other relevant (i.e., GSA or Commerce) directive. Such disclosure shall not be used to make determinations about individuals.

8. A record from this system of records may be disclosed, as a routine use, to the public after either publication of the application pursuant to 35 U.S.C. 122(b) or issuance of a patent pursuant to 35 U.S.C. 151. Further, a record may be disclosed, subject to the limitations of 37 CFR 1.14, as a routine use, to the public if the record was filed in an application which became abandoned or in which the proceedings were terminated and which application is referenced by either a published application, an application open to public inspections or an issued patent.

9. A record from this system of records may be disclosed, as a routine use, to a Federal, State, or local law enforcement agency, if the USPTO becomes aware of a violation or potential violation of law or regulation.

EFS Web 2.2.12

Doc Code: R46C.REQ
Document Description: Request under 37 CFR 1.46(c) to correct, update or change the applicant.

PTO/AIA/41 (04-15)
Approved for use through 11/30/2020. OMB 0651-0031
U.S. Patent and Trademark Office, U.S. DEPARTMENT OF COMMERCE
Under the Paperwork Reduction Act of 1995, no persons are required to respond to a collection of information unless it displays a valid OMB control number.

REQUEST TO CORRECT OR UPDATE THE NAME OF THE APPLICANT UNDER 37 CFR 1.46(c)(1), OR CHANGE THE APPLICANT UNDER 37 CFR 1.46(c)(2)

(FOR USE ONLY IN APPLICATIONS FILED ON OR AFTER SEPTEMBER 16, 2012)

Application Number	16143831
Filing Date	2018-09-27
First Named Inventor	Vincent PILON
Art Unit	2874
Examiner Name	Rhonda S. PEACE
Practitioner Docket Number	771/13569.451

To: Commissioner for Patents
P.O. Box 1450
Alexandria, VA 22313-1450

Applicant hereby **requests that the name of the applicant be corrected or updated under 37 CFR 1.46(c)(1), or that the applicant be changed under 37 CFR 1.46(c)(2),** in the above-identified application. **Requests under 37 CFR 1.46(c)(1) or (c)(2) cannot be submitted after payment of the issue fee or if the application has been patented.**

Please check the applicable box(es) below.

☒ 1. This request is to **correct or update the name of the applicant** (**under 37 CFR 1.46(c)(1)**) and includes:

☒ An application data sheet (ADS) in accordance with 37 CFR 1.76(c) with the corrected or updated information shown with markings (*e.g.*, underlining for insertions, strikethrough for deletions). A Corrected Web-based ADS may be used.

Note: Requests under 37 CFR 1.46(c)(1) may be filed to correct typographical errors in the name of the § 1.46 applicant, or for updating the name of the § 1.46 applicant (*i.e.*, where there is no change in the applicant itself but just in the applicant's name). See the Manual of Patent Examining Procedure (MPEP) section 605.01.

☐ 2. This request is to **change the applicant** (**under 37 CFR 1.46(c)(2)**) and includes:

☐ An application data sheet (ADS) in accordance with 37 CFR 1.76(c) that identifies the changes with proper markings (underlining for insertions and strikethrough for deletions). A Corrected Web-based ADS may be used.

☐ A Statement Under 37 CFR 3.73(c) (Form PTO/AIA/96 or equivalent). See MPEP 325.

I am the

☐ applicant* ☒ attorney or agent of record Registration number 55757 ☐ attorney or agent acting under 37 CFR 1.34 Registration number _____

Signature /Hugh Mansfield/
Typed or printed name Hugh Mansfield
Date SEPTEMBER 1, 2020

NOTE: This form must be signed in accordance with 37 CFR 1.33. See 37 CFR 1.4 for signature requirements and certifications. *Juristic entities must be represented by a patent practitioner (See 37 CFR 1.31, applicable to any paper filed on or after September 16, 2012 that is presented on behalf of a juristic entity, regardless of application filing date). Submit multiple forms if more than one signature is required, see below**.

☒ ** Total of 1 forms are submitted.

This collection of information is required by 37 CFR 1.36. The information is required to obtain or retain a benefit by the public which is to file (and by the USPTO to process) an application. Confidentiality is governed by 35 U.S.C. 122 and 37 CFR 1.11 and 1.14. This collection is estimated to take 12 minutes to complete, including gathering, preparing, and submitting the completed application form to the USPTO. Time will vary depending upon the individual case. Any comments on the amount of time you require to complete this form and/or suggestions for reducing this burden, should be sent to the Chief Information Officer, U.S. Patent and Trademark Office, U.S. Department of Commerce, P.O. Box 1450, Alexandria, VA 22313-1450. DO NOT SEND FEES OR COMPLETED FORMS TO THIS ADDRESS. **SEND TO: Commissioner for Patents, P.O. Box 1450, Alexandria, VA 22313-1450.**

If you need assistance in completing the form, call 1-800-PTO-9199 and select option 2.

Privacy Act Statement

The **Privacy Act of 1974 (P.L. 93-579)** requires that you be given certain information in connection with your submission of the attached form related to a patent application or patent. Accordingly, pursuant to the requirements of the Act, please be advised that: (1) the general authority for the collection of this information is 35 U.S.C. 2(b)(2); (2) furnishing of the information solicited is voluntary; and (3) the principal purpose for which the information is used by the U.S. Patent and Trademark Office is to process and/or examine your submission related to a patent application or patent. If you do not furnish the requested information, the U.S. Patent and Trademark Office may not be able to process and/or examine your submission, which may result in termination of proceedings or abandonment of the application or expiration of the patent.

The information provided by you in this form will be subject to the following routine uses:

1. The information on this form will be treated confidentially to the extent allowed under the Freedom of Information Act (5 U.S.C. 552) and the Privacy Act (5 U.S.C 552a). Records from this system of records may be disclosed to the Department of Justice to determine whether disclosure of these records is required by the Freedom of Information Act.
2. A record from this system of records may be disclosed, as a routine use, in the course of presenting evidence to a court, magistrate, or administrative tribunal, including disclosures to opposing counsel in the course of settlement negotiations.
3. A record in this system of records may be disclosed, as a routine use, to a Member of Congress submitting a request involving an individual, to whom the record pertains, when the individual has requested assistance from the Member with respect to the subject matter of the record.
4. A record in this system of records may be disclosed, as a routine use, to a contractor of the Agency having need for the information in order to perform a contract. Recipients of information shall be required to comply with the requirements of the Privacy Act of 1974, as amended, pursuant to 5 U.S.C. 552a(m).
5. A record related to an International Application filed under the Patent Cooperation Treaty in this system of records may be disclosed, as a routine use, to the International Bureau of the World Intellectual Property Organization, pursuant to the Patent Cooperation Treaty.
6. A record in this system of records may be disclosed, as a routine use, to another federal agency for purposes of National Security review (35 U.S.C. 181) and for review pursuant to the Atomic Energy Act (42 U.S.C. 218(c)).
7. A record from this system of records may be disclosed, as a routine use, to the Administrator, General Services, or his/her designee, during an inspection of records conducted by GSA as part of that agency's responsibility to recommend improvements in records management practices and programs, under authority of 44 U.S.C. 2904 and 2906. Such disclosure shall be made in accordance with the GSA regulations governing inspection of records for this purpose, and any other relevant (*i.e.*, GSA or Commerce) directive. Such disclosure shall not be used to make determinations about individuals.
8. A record from this system of records may be disclosed, as a routine use, to the public after either publication of the application pursuant to 35 U.S.C. 122(b) or issuance of a patent pursuant to 35 U.S.C. 151. Further, a record may be disclosed, subject to the limitations of 37 CFR 1.14, as a routine use, to the public if the record was filed in an application which became abandoned or in which the proceedings were terminated and which application is referenced by either a published application, an application open to public inspection or an issued patent.
9. A record from this system of records may be disclosed, as a routine use, to a Federal, State, or local law enforcement agency, if the USPTO becomes aware of a violation or potential violation of law or regulation.

Electronic Acknowledgement Receipt

EFS ID:	40438388
Application Number:	16143831
International Application Number:	
Confirmation Number:	4901
Title of Invention:	MODULAR FIBER OPTIC CASSETTE, SYSTEM AND METHOD
First Named Inventor/Applicant Name:	VINCENT PILON
Customer Number:	25545
Filer:	Hugh Mansfield/Regeline Jean Francois
Filer Authorized By:	Hugh Mansfield
Attorney Docket Number:	771/13569.451
Receipt Date:	01-SEP-2020
Filing Date:	27-SEP-2018
Time Stamp:	11:38:56
Application Type:	Utility under 35 USC 111(a)

Payment information:

Submitted with Payment	no

File Listing:

Document Number	Document Description	File Name	File Size(Bytes)/ Message Digest	Multi Part /.zip	Pages (if appl.)
1	Power of Attorney	POA-BELDEN_ULC.pdf	283765 a21012382a15c76246f26207c5276944e1cfb3be	no	1

Warnings:

Information:					
2	Assignee showing of ownership per 37 CFR 3.73	2501-USPTO-Statement_Under_37_CFR_3-73.pdf	119989 bb211bf0bd8e9b8f2e395390fccd0a8c6302d98e	no	3
Warnings:					
Information:					
3	Application Data Sheet	2501-USPTO-Corrected_ADS.pdf	1347873 4c0dffc8c8e276f88fd52172295f027b20e103bc	no	8
Warnings:					
Information:					
This is not an USPTO supplied ADS fillable form					
4	Req to correct/update/change appl name until pay issue fee	2501-USPTO-Request_to_correct_Applicant.pdf	219434 5331a25948f0d91f9d512a3fb4567174d14e1c39	no	2
Warnings:					
Information:					
			Total Files Size (in bytes):	1971061	

This Acknowledgement Receipt evidences receipt on the noted date by the USPTO of the indicated documents, characterized by the applicant, and including page counts, where applicable. It serves as evidence of receipt similar to a Post Card, as described in MPEP 503.

<u>New Applications Under 35 U.S.C. 111</u>
If a new application is being filed and the application includes the necessary components for a filing date (see 37 CFR 1.53(b)-(d) and MPEP 506), a Filing Receipt (37 CFR 1.54) will be issued in due course and the date shown on this Acknowledgement Receipt will establish the filing date of the application.
<u>National Stage of an International Application under 35 U.S.C. 371</u>
If a timely submission to enter the national stage of an international application is compliant with the conditions of 35 U.S.C. 371 and other applicable requirements a Form PCT/DO/EO/903 indicating acceptance of the application as a national stage submission under 35 U.S.C. 371 will be issued in addition to the Filing Receipt, in due course.
<u>New International Application Filed with the USPTO as a Receiving Office</u>
If a new international application is being filed and the international application includes the necessary components for an international filing date (see PCT Article 11 and MPEP 1810), a Notification of the International Application Number and of the International Filing Date (Form PCT/RO/105) will be issued in due course, subject to prescriptions concerning national security, and the date shown on this Acknowledgement Receipt will establish the international filing date of the application.

UNITED STATES PATENT AND TRADEMARK OFFICE

UNITED STATES DEPARTMENT OF COMMERCE
United States Patent and Trademark Office
Address: COMMISSIONER FOR PATENTS
P.O. Box 1450
Alexandria, Virginia 22313-1450
www.uspto.gov

APPLICATION NUMBER	FILING OR 371(C) DATE	FIRST NAMED APPLICANT	ATTY. DOCKET NO./TITLE
16/143,831	09/27/2018	VINCENT PILON	771/13569.451

CONFIRMATION NO. 4901

POA ACCEPTANCE LETTER

25545
Lavery, De Billy, LLP
1 Place Ville Marie, Suite 4000
Montreal, QC H3B 4M4
CANADA

OC000000119644162

Date Mailed: 09/03/2020

NOTICE OF ACCEPTANCE OF POWER OF ATTORNEY

This is in response to the Power of Attorney filed 09/01/2020.

The Power of Attorney in this application is accepted. Correspondence in this application will be mailed to the above address as provided by 37 CFR 1.33.

Questions about the contents of this notice and the requirements it sets forth should be directed to the Office of Data Management, Application Assistance Unit, at **(571) 272-4000** or **(571) 272-4200** or **1-888-786-0101**.

/cbowen/

UNITED STATES PATENT AND TRADEMARK OFFICE

UNITED STATES DEPARTMENT OF COMMERCE
United States Patent and Trademark Office
Address: COMMISSIONER FOR PATENTS
P.O. Box 1450
Alexandria, Virginia 22313-1450
www.uspto.gov

APPLICATION NUMBER	FILING or 371(c) DATE	GRP ART UNIT	FIL FEE REC'D	ATTY.DOCKET.NO	TOT CLAIMS	IND CLAIMS
16/143,831	09/27/2018	2874	1880	771/13569.451	16	3

CONFIRMATION NO. 4901

CORRECTED FILING RECEIPT

25545
Lavery, De Billy, LLP
1 Place Ville Marie, Suite 4000
Montreal, QC H3B 4M4
CANADA

Date Mailed: 09/03/2020

Receipt is acknowledged of this non-provisional utility patent application. The application will be taken up for examination in due course. Applicant will be notified as to the results of the examination. Any correspondence concerning the application must include the following identification information: the U.S. APPLICATION NUMBER, FILING DATE, NAME OF FIRST INVENTOR, and TITLE OF INVENTION. Fees transmitted by check or draft are subject to collection.

Please verify the accuracy of the data presented on this receipt. If an error is noted on this Filing Receipt, please submit a written request for a corrected Filing Receipt, including a properly marked-up ADS showing the changes with strike-through for deletions and underlining for additions. If you received a "Notice to File Missing Parts" or other Notice requiring a response for this application, please submit any request for correction to this Filing Receipt with your reply to the Notice. When the USPTO processes the reply to the Notice, the USPTO will generate another Filing Receipt incorporating the requested corrections provided that the request is grantable.

Inventor(s)

VINCENT PILON, LACHINE, CANADA;

Applicant(s)

BELDEN CANADA ULC, Saint-laurent, CANADA;

Power of Attorney: The patent practitioners associated with Customer Number 25545

Domestic Priority data as claimed by applicant

This appln claims benefit of 62/567,339 10/03/2017

Foreign Applications for which priority is claimed (You may be eligible to benefit from the **Patent Prosecution Highway** program at the USPTO. Please see http://www.uspto.gov for more information.) - None.
Foreign application information must be provided in an Application Data Sheet in order to constitute a claim to foreign priority. See 37 CFR 1.55 and 1.76.

Permission to Access Application via Priority Document Exchange: Yes

Permission to Access Search Results: Yes

Applicant may provide or rescind an authorization for access using Form PTO/SB/39 or Form PTO/SB/69 as appropriate.

If Required, Foreign Filing License Granted: 10/17/2018

The country code and number of your priority application, to be used for filing abroad under the Paris Convention, is **US 16/143,831**

Projected Publication Date: Not Applicable

Non-Publication Request: No

Early Publication Request: No
Title

MODULAR FIBER OPTIC CASSETTE, SYSTEM AND METHOD

Preliminary Class

385

Statement under 37 CFR 1.55 or 1.78 for AIA (First Inventor to File) Transition Applications: No

PROTECTING YOUR INVENTION OUTSIDE THE UNITED STATES

Since the rights granted by a U.S. patent extend only throughout the territory of the United States and have no effect in a foreign country, an inventor who wishes patent protection in another country must apply for a patent in a specific country or in regional patent offices. Applicants may wish to consider the filing of an international application under the Patent Cooperation Treaty (PCT). An international (PCT) application generally has the same effect as a regular national patent application in each PCT-member country. The PCT process **simplifies** the filing of patent applications on the same invention in member countries, but **does not result** in a grant of "an international patent" and does not eliminate the need of applicants to file additional documents and fees in countries where patent protection is desired.

Almost every country has its own patent law, and a person desiring a patent in a particular country must make an application for patent in that country in accordance with its particular laws. Since the laws of many countries differ in various respects from the patent law of the United States, applicants are advised to seek guidance from specific foreign countries to ensure that patent rights are not lost prematurely.

Applicants also are advised that in the case of inventions made in the United States, the Director of the USPTO must issue a license before applicants can apply for a patent in a foreign country. The filing of a U.S. patent application serves as a request for a foreign filing license. The application's filing receipt contains further information and guidance as to the status of applicant's license for foreign filing.

Applicants may wish to consult the USPTO booklet, "General Information Concerning Patents" (specifically, the section entitled "Treaties and Foreign Patents") for more information on timeframes and deadlines for filing foreign patent applications. The guide is available either by contacting the USPTO Contact Center at 800-786-9199, or it can be viewed on the USPTO website at http://www.uspto.gov/web/offices/pac/doc/general/index.html.

For information on preventing theft of your intellectual property (patents, trademarks and copyrights), you may wish to consult the U.S. Government website, http://www.stopfakes.gov. Part of a Department of Commerce initiative, this website includes self-help "toolkits" giving innovators guidance on how to protect intellectual property in specific countries such as China, Korea and Mexico. For questions regarding patent enforcement issues, applicants may call the U.S. Government hotline at 1-866-999-HALT (1-866-999-4258).

LICENSE FOR FOREIGN FILING UNDER

Title 35, United States Code, Section 184

Title 37, Code of Federal Regulations, 5.11 & 5.15

GRANTED

The applicant has been granted a license under 35 U.S.C. 184, if the phrase "IF REQUIRED, FOREIGN FILING LICENSE GRANTED" followed by a date appears on this form. Such licenses are issued in all applications where the conditions for issuance of a license have been met, regardless of whether or not a license may be required as set forth in 37 CFR 5.15. The scope and limitations of this license are set forth in 37 CFR 5.15(a) unless an earlier license has been issued under 37 CFR 5.15(b). The license is subject to revocation upon written notification. The date indicated is the effective date of the license, unless an earlier license of similar scope has been granted under 37 CFR 5.13 or 5.14.

This license is to be retained by the licensee and may be used at any time on or after the effective date thereof unless it is revoked. This license is automatically transferred to any related applications(s) filed under 37 CFR 1.53(d). This license is not retroactive.

The grant of a license does not in any way lessen the responsibility of a licensee for the security of the subject matter as imposed by any Government contract or the provisions of existing laws relating to espionage and the national security or the export of technical data. Licensees should apprise themselves of current regulations especially with respect to certain countries, of other agencies, particularly the Office of Defense Trade Controls, Department of State (with respect to Arms, Munitions and Implements of War (22 CFR 121-128)); the Bureau of Industry and Security, Department of Commerce (15 CFR parts 730-774); the Office of Foreign AssetsControl, Department of Treasury (31 CFR Parts 500+) and the Department of Energy.

NOT GRANTED

No license under 35 U.S.C. 184 has been granted at this time, if the phrase "IF REQUIRED, FOREIGN FILING LICENSE GRANTED" DOES NOT appear on this form. Applicant may still petition for a license under 37 CFR 5.12, if a license is desired before the expiration of 6 months from the filing date of the application. If 6 months has lapsed from the filing date of this application and the licensee has not received any indication of a secrecy order under 35 U.S.C. 181, the licensee may foreign file the application pursuant to 37 CFR 5.15(b).

SelectUSA

The United States represents the largest, most dynamic marketplace in the world and is an unparalleled location for business investment, innovation, and commercialization of new technologies. The U.S. offers tremendous resources and advantages for those who invest and manufacture goods here. Through SelectUSA, our nation works to promote and facilitate business investment. SelectUSA provides information assistance to the international investor community; serves as an ombudsman for existing and potential investors; advocates on behalf of U.S. cities, states, and regions competing for global investment; and counsels U.S. economic development organizations on investment attraction best practices. To learn more about why the United States is the best country in the world to develop technology, manufacture products, deliver services, and grow your business, visit http://www.SelectUSA.gov or call +1-202-482-6800.

UNITED STATES PATENT AND TRADEMARK OFFICE

UNITED STATES DEPARTMENT OF COMMERCE
United States Patent and Trademark Office
Address: COMMISSIONER FOR PATENTS
P.O. Box 1450
Alexandria, Virginia 22313-1450
www.uspto.gov

APPLICATION NUMBER	FILING OR 371(C) DATE	FIRST NAMED APPLICANT	ATTY. DOCKET NO./TITLE
16/143,831	09/27/2018	VINCENT PILON	771/13569.451

CONFIRMATION NO. 4901

POA ACCEPTANCE LETTER

25545
Lavery, De Billy, LLP
1 Place Ville Marie, Suite 4000
Montreal, QC H3B 4M4
CANADA

OC000000119699204

Date Mailed: 09/09/2020

NOTICE OF ACCEPTANCE OF POWER OF ATTORNEY

This is in response to the Power of Attorney filed 09/01/2020.

The Power of Attorney in this application is accepted. Correspondence in this application will be mailed to the above address as provided by 37 CFR 1.33.

Questions about the contents of this notice and the requirements it sets forth should be directed to the Office of Data Management, Application Assistance Unit, at **(571) 272-4000** or **(571) 272-4200** or **1-888-786-0101**.

/qtran/

UNITED STATES PATENT AND TRADEMARK OFFICE

UNITED STATES DEPARTMENT OF COMMERCE
United States Patent and Trademark Office
Address: COMMISSIONER FOR PATENTS
P.O. Box 1450
Alexandria, Virginia 22313-1450
www.uspto.gov

APPLICATION NO.	ISSUE DATE	PATENT NO.	ATTORNEY DOCKET NO.	CONFIRMATION NO.
16/143,831	10/06/2020	10795107	771/13569.451	4901

25545 7590 09/16/2020

Lavery, De Billy, LLP
1 Place Ville Marie, Suite 4000
Montreal, QUEBEC H3B 4M4
CANADA

ISSUE NOTIFICATION

The projected patent number and issue date are specified above.

Determination of Patent Term Adjustment under 35 U.S.C. 154 (b)
(application filed on or after May 29, 2000)

The Patent Term Adjustment is 0 day(s). Any patent to issue from the above-identified application will include an indication of the adjustment on the front page.

If a Continued Prosecution Application (CPA) was filed in the above-identified application, the filing date that determines Patent Term Adjustment is the filing date of the most recent CPA.

Applicant will be able to obtain more detailed information by accessing the Patent Application Information Retrieval (PAIR) WEB site (http://pair.uspto.gov).

Any questions regarding the Patent Term Extension or Adjustment determination should be directed to the Office of Patent Legal Administration at (571)-272-7702. Questions relating to issue and publication fee payments should be directed to the Application Assistance Unit (AAU) of the Office of Data Management (ODM) at (571)-272-4200.

APPLICANT(s) (Please see PAIR WEB site http://pair.uspto.gov for additional applicants):

BELDEN CANADA ULC, Saint-laurent, CANADA;
VINCENT PILON, LACHINE, CANADA;

The United States represents the largest, most dynamic marketplace in the world and is an unparalleled location for business investment, innovation, and commercialization of new technologies. The USA offers tremendous resources and advantages for those who invest and manufacture goods here. Through SelectUSA, our nation works to encourage and facilitate business investment. To learn more about why the USA is the best country in the world to develop technology, manufacture products, and grow your business, visit SelectUSA.gov.

IR103 (Rev. 10/09)