US009690065B2

(12) **United States Patent**
Wiltjer et al.

(10) **Patent No.: US 9,690,065 B2**
(45) **Date of Patent: Jun. 27, 2017**

(54) **HIGH DENSITY FIBER ENCLOSURE AND METHOD**

(71) Applicant: **Panduit Corp.**, Tinley Park, IL (US)

(72) Inventors: **Jerry A. Wiltjer**, Frankfort, IL (US); **Shaun P. Brouwer**, St. John, IN (US); **Gregory L. Kuffel**, Plainfield, IL (US); **Joel D. Kwasny**, Romeoville, IL (US); **Kai C. Lui**, Des Plaines, IL (US); **Benjamin S. Novak**, Lansing, IL (US); **Joseph E. Sanders**, Elwood, IL (US)

(73) Assignee: **Panduit Corp.**, Tinley Park, IL (US)

(*) Notice: Subject to any disclaimer, the term of this patent is extended or adjusted under 35 U.S.C. 154(b) by 0 days.

(21) Appl. No.: **14/848,757**

(22) Filed: **Sep. 9, 2015**

(65) **Prior Publication Data**

US 2016/0077298 A1 Mar. 17, 2016

Related U.S. Application Data

(60) Provisional application No. 62/049,442, filed on Sep. 12, 2014.

(51) **Int. Cl.**
G02B 6/44 (2006.01)

(52) **U.S. Cl.**
CPC ***G02B 6/4453*** (2013.01); ***G02B 6/4452*** (2013.01); ***G02B 6/4455*** (2013.01)

(58) **Field of Classification Search**
CPC ... G02B 6/4453; G02B 6/4455; G02B 6/4452
See application file for complete search history.

(56) **References Cited**

U.S. PATENT DOCUMENTS

2,056,219	A	10/1936	Stout et al.
2,550,339	A	4/1951	Ehrman
3,392,543	A	7/1968	Miller
3,478,535	A	11/1969	Perez et al.
4,034,572	A	7/1977	Morris et al.

(Continued)

FOREIGN PATENT DOCUMENTS

CN	103004041	A	3/2013
EP	2159613	A2	8/2009

(Continued)

OTHER PUBLICATIONS

Belden® Infrastructure Solutions Catalog, cover page; p. 21; and back page, 2013 (3 pgs.).

(Continued)

Primary Examiner — Ryan Lepisto
(74) *Attorney, Agent, or Firm* — Christopher S. Clancy; James H. Williams; Aimee E. McVady

(57) **ABSTRACT**

A high density fiber enclosure system includes a chassis, cassette trays, an optional unification clip, cassettes, and an optional trunk cable management system. The chassis, cassette trays, and cassettes are configured such that individual cassettes may be installed, removed, and otherwise positioned for easy access by a user. The unification clip allows two adjacent cassette trays to be connected to one other such that cassette trays move as one unit. The trunk cable management system is designed to organize trunk cables and trunk cable furcation legs as well as relieve strain on the trunk cables and trunk cable furcation legs.

9 Claims, 52 Drawing Sheets

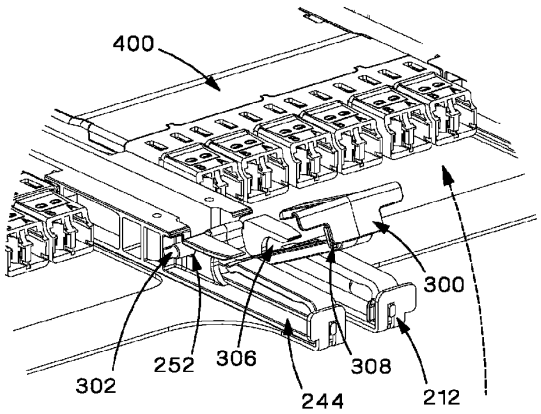

CommScope Ex. 1014

(56) **References Cited**

U.S. PATENT DOCUMENTS

4,266,853	A	5/1981	Hutchings et al.
4,585,303	A	4/1986	Pinsard et al.
4,655,521	A	4/1987	Thomas
4,792,203	A	12/1988	Nelson et al.
4,824,196	A	4/1989	Bylander
4,846,565	A	7/1989	Swanson et al.
4,986,762	A	1/1991	Keith
5,046,811	A	9/1991	Jung et al.
5,129,030	A	7/1992	Petrunia
5,142,606	A	8/1992	Carney et al.
5,167,001	A	11/1992	Debortoli et al.
5,212,761	A	5/1993	Petrunia
5,325,455	A	6/1994	Henson et al.
5,339,379	A	8/1994	Kutsch et al.
5,370,541	A	12/1994	Bossard
5,442,726	A	8/1995	Howard et al.
5,448,670	A	9/1995	Blew et al.
5,490,229	A	2/1996	Ghandeharizadeh et al.
5,497,444	A	3/1996	Wheeler
5,511,144	A	4/1996	Hawkins et al.
5,647,043	A	7/1997	Anderson et al.
5,717,810	A	2/1998	Wheeler
5,758,003	A	5/1998	Wheeler et al.
5,804,765	A	9/1998	Siemon et al.
5,836,786	A	11/1998	Pepe
5,902,155	A	5/1999	Polgar et al.
5,946,440	A	8/1999	Puetz
5,978,540	A	11/1999	Bechamps et al.
6,017,238	A	1/2000	Johnston
6,080,011	A	6/2000	Tsao et al.
6,085,003	A	7/2000	Knight
6,086,415	A	7/2000	Sanchez et al.
6,095,852	A	8/2000	Gregory, II
6,109,978	A	8/2000	Stellman et al.
6,167,183	A	12/2000	Swain
6,203,130	B1	3/2001	Montgelas et al.
6,210,216	B1	4/2001	Tso-Chin et al.
6,356,697	B1	3/2002	Braga et al.
6,396,992	B1	5/2002	Debal
6,591,051	B2	7/2003	Solheid et al.
6,768,860	B2	7/2004	Liberty
6,769,551	B2	8/2004	Rafferty et al.
6,771,861	B2	8/2004	Wagner et al.
6,788,846	B2	9/2004	Hileman et al.
6,920,274	B2	7/2005	Rapp et al.
6,944,389	B2	9/2005	Giraud et al.
6,946,600	B1	9/2005	Stoller et al.
6,974,438	B2	12/2005	Shekalim
7,031,588	B2	4/2006	Cowley et al.
7,087,840	B2	8/2006	Herring et al.
7,113,687	B2	9/2006	Womack et al.
7,147,383	B2	12/2006	Sullivan
7,200,314	B2	4/2007	Womack et al.
7,200,316	B2	4/2007	Giraud et al.
7,318,321	B2	1/2008	Grassmuck et al.
7,320,507	B2	1/2008	White et al.
7,330,629	B2	2/2008	Cooke et al.
7,376,321	B2	5/2008	Bolster et al.
RE40,375	E	6/2008	Abel et al.
7,416,347	B2	8/2008	Livingston et al.
7,418,182	B2	8/2008	Krampotich
7,509,015	B2	3/2009	Murano
7,529,458	B2	5/2009	Spisany et al.
7,532,799	B2	5/2009	Gronvall et al.
7,570,861	B2	8/2009	Smrha et al.
7,628,644	B1	12/2009	Peluffo et al.
7,672,561	B1	3/2010	Keith et al.
7,682,187	B2	3/2010	Spitaels et al.
7,686,518	B2	3/2010	Case et al.
7,689,089	B2	3/2010	Wagner et al.
7,722,411	B2	5/2010	Merrow et al.
7,729,586	B2	6/2010	Keith
7,744,176	B2	6/2010	Milligan
7,756,378	B2	7/2010	Ruiz
7,756,380	B2	7/2010	Ruiz et al.
7,760,983	B2	7/2010	Jadaud
7,826,705	B2	11/2010	McGranahan et al.
D628,462	S	12/2010	Sato
7,854,333	B2	12/2010	Kottke et al.
7,856,166	B2	12/2010	Biribuze et al.
7,876,995	B2	1/2011	Keith et al.
7,887,244	B2	2/2011	Milette et al.
7,889,961	B2	2/2011	Cote et al.
7,903,925	B2	3/2011	Cooke et al.
7,945,135	B2	5/2011	Cooke et al.
7,945,136	B2	5/2011	Cooke et al.
7,962,000	B2	6/2011	Wagner et al.
7,974,105	B2	7/2011	Dean, Jr. et al.
7,979,985	B2	7/2011	Spitaels et al.
8,014,646	B2	9/2011	Keith et al.
8,038,015	B2	10/2011	Laursen et al.
8,038,354	B2	10/2011	Nielson et al.
8,061,534	B2	11/2011	Laursen et al.
8,075,198	B2	12/2011	Milette et al.
8,075,344	B2	12/2011	Shih
8,121,458	B2	2/2012	Barth et al.
8,135,257	B2	3/2012	Cooke et al.
8,154,886	B2	4/2012	Hendrix et al.
8,179,684	B2	5/2012	Smrha et al.
8,184,938	B2	5/2012	Cooke et al.
8,203,450	B2	6/2012	German et al.
8,254,742	B2	8/2012	Womack
8,280,216	B2	10/2012	Cooke et al.
8,285,104	B2	10/2012	Davis et al.
8,290,332	B2	10/2012	Mudd
8,290,333	B2	10/2012	Barlowe et al.
8,297,854	B2	10/2012	Bickham et al.
8,301,004	B2	10/2012	Cooke et al.
8,326,107	B2	12/2012	Cooke et al.
8,331,752	B2	12/2012	Biribuze et al.
8,403,599	B2	3/2013	Hawkins et al.
8,411,465	B2	4/2013	Dean, Jr. et al.
8,418,974	B2	4/2013	Felcman et al.
8,433,171	B2	4/2013	Cooke et al.
8,437,147	B2	5/2013	Dean, Jr. et al.
8,437,597	B2	5/2013	Cooke et al.
8,452,148	B2	5/2013	Cooke et al.
8,452,149	B2	5/2013	Krampotich et al.
8,472,776	B2	6/2013	Ruiz
8,520,996	B2	8/2013	Cowen et al.
8,538,226	B2	9/2013	Makrides-Saravanos et al.
8,559,783	B2	10/2013	Campos et al.
8,565,572	B2	10/2013	Krampotich et al.
8,625,950	B2	1/2014	Beamon et al.
8,625,951	B2	1/2014	Pimentel et al.
8,705,926	B2	4/2014	Giraud et al.
8,712,206	B2	4/2014	Cooke et al.
8,746,466	B2	6/2014	Taylor
8,867,883	B2	10/2014	Crain et al.
8,879,881	B2	11/2014	Cote et al.
8,938,147	B2	1/2015	Krampotich et al.
8,953,924	B2	2/2015	Cote et al.
8,965,168	B2	2/2015	Cowen et al.
8,992,099	B2	3/2015	Blackwell, Jr. et al.
9,008,485	B2	4/2015	Ramirez et al.
9,020,320	B2	4/2015	Cooke et al.
9,075,216	B2	7/2015	Cote et al.
9,075,217	B2	7/2015	Giraud et al.
9,116,324	B2	8/2015	Cooke et al.
9,140,870	B2	9/2015	Marmon et al.
9,170,392	B2	10/2015	Krampotich et al.
9,213,161	B2	12/2015	Cote et al.
9,279,951	B2	3/2016	McGranahan et al.
2006/0018622	A1*	1/2006	Caveney G02B 6/4455 385/135
2008/0089656	A1*	4/2008	Wagner H04Q 1/13 385/135
2008/0175552	A1*	7/2008	Smrha G02B 6/4452 385/135
2009/0245743	A1	10/2009	Cote et al.
2010/0051886	A1	3/2010	Cooke et al.
2010/0052346	A1	3/2010	Cooke et al.
2010/0054684	A1	3/2010	Cooke et al.
2010/0296791	A1	11/2010	Makrides-Saravanos et al.

(56) **References Cited**

U.S. PATENT DOCUMENTS

2010/0310225	A1*	12/2010	Anderson	G02B 6/4455 385/135
2010/0316334	A1	12/2010	Kewitsch	
2010/0322581	A1	12/2010	Cooke et al.	
2010/0322582	A1	12/2010	Cooke et al.	
2010/0322583	A1	12/2010	Cooke et al.	
2011/0268405	A1	11/2011	Cote et al.	
2011/0268406	A1	11/2011	Giraud et al.	
2011/0268408	A1	11/2011	Giraud et al.	
2011/0268410	A1	11/2011	Giraud et al.	
2011/0268411	A1	11/2011	Giraud et al.	
2011/0274402	A1	11/2011	Giraud et al.	
2012/0114295	A1	5/2012	Guzzo et al.	
2013/0011105	A1	1/2013	Barlowe et al.	
2013/0028567	A1	1/2013	Parikh et al.	
2013/0121657	A1	5/2013	Seo et al.	
2013/0148935	A1	6/2013	Cooke et al.	
2013/0214662	A1	8/2013	Pimentel et al.	
2013/0251319	A1	9/2013	Compton et al.	
2013/0251326	A1	9/2013	Cooke et al.	
2013/0287357	A1	10/2013	Solheid et al.	
2014/0010511	A1	1/2014	Smrha et al.	
2014/0079365	A1	3/2014	Hill et al.	
2016/0033732	A1	2/2016	Giraud et al.	
2016/0062050	A1	3/2016	Giraud et al.	
2016/0062055	A1	3/2016	Giraud et al.	
2016/0062058	A1	3/2016	Dagley et al.	
2016/0062068	A1	3/2016	Giraud et al.	

FOREIGN PATENT DOCUMENTS

EP	2544035	A1	1/2013
JP	2002124790	A	4/2002
WO	9942881	A1	8/1999

OTHER PUBLICATIONS

Hallam Manufacturing Cable Zone Patch Frames, undated (1 pg.).
Leviton® Nertwork Solutions Patch Panel Selection Guide, cover page; p. 12; and back page, undated (3 pgs.).
Siemon™ VersaPOD Zero-U Sliding Vertical Patch Panels (3 pgs)., Jun. 27, 2016.
Teleconnectivity Zero RU Quick-Fit Bracket, cover page; p. 2; and back page (3 pgs.), 2013.
Pretium EDGE® Advanced Optical (AO) Solutions Features and Benefits; Corning Cable Systems LLC; 1 page; May 2013.
Pretium EDGE® AO Solutions the Next Evolution of Your Data Center Revolution; Corning Cable System, LLC; 8 pages; May 2013.
Dell™ Poweredge™ 1950 Server; Dell, Inc.; 2 pages; Nov. 2006.
Dell™ Best Practices Guide for Rack Enclosures PE2440 & 4220; Dell, Inc.; 17 pages; 2009.
Service Description: PowerEdge™ Basic Server Installation with Rack Mounting; Dell, Inc.; 2 pages; 2008.
Dell™ PowerEdge™ 1950 III Server; Dell, Inc.; 2 pages; Jun. 2008.
Service Description: Installation of a Dell Server, Storage or Peripheral Device; Dell, Inc.; 11 pages; Aug. 5, 2013.
Server Administrator Version 7.2 Installation Guide; Dell, Inc.; 106 pages; Jan. 2013.
WorkForce® Pro WP-4530 Instructions; Epson American, Inc.; 4 pages; Aug. 2011.
Hubbell OptiChannel High Density 144 Port 1U Fiber Enclosure; Hubbell Premise Wiring; 2 pages; Jan. 2012.
Hubbell OptiChannel Ultra Compact Fiber LC to MPO Cassette Modules; Hubbell Premise Wiring; 2 pages; Oct. 2010.
Pretium Edge® HD Solutions for Enterprise Data Centers and Storage Area Networks; Corning Cable Systems, LLC; 20 pages; Nov. 2012.
RapidNet™ Pre-Terminated Network Cabling Systems LITPD203 Rev. 2; HellermannTyton; 8 pages; Apr. 2005.
Value-Added Module (VAM) System Monitor, Splitter, WDM, CWDM and DWDM Modules 6th Edition; TE Connectivity; 32 pages; Aug. 2014.
Mini VAM Connector Cleaning Instructions ADCP-90-412, Issue 3; ADC Telecommunications, Inc.; 8 pages; Sep. 2002.
Express Fiber Management® (XFM) MPO Optical Cassettes; AFL; 2 pages; 2003.
Fiber Optic Cassette Module 12 Fiber, MTP to 6-SC and 6-LC Configuration Customer Drawing; Panduit™ Corp.; 1 page; Oct. 26, 2004.
MTP® Brand Bulkhead Adapters; US Conec; 2 pages; 2010.
QuickNet™ SFQ Series MTP Fiber Optic Cassettes Specification Sheet; Panduit Corp.; 2 pages; Jan. 2009.
High Density SFQ Small Form Factor QuickNet™ Fiber Cable Assemblies Product Bulletin; Panduit Corp.; 2 pages; Feb. 2011.
Development of Mini-MPO Connector; Naoko Shimoji, Jun Yamakawa and Masato Shiino; 5 pages; Jun. 29, 1998.
OPTICOM™ Fiber Optic Rack Mount Enclosure CM274 Installation Instructions; Panuit Corp.; 2 pages; 2002.
Evolution of Cabling Standards (Q&A); NORDX/CDT; 8 pages; Feb. 2002.
Opticom QuickNet Rack Mount Fiber Cassette Enclosures Installation Instructions FS006; Panduit Corp.; 11 pages; 2008.
Introducing the NG4access ODF platform—the next-generation optical distribution frame that increases density while reducing cost and installation time in the network; TE Connectivity; 4 pages; Aug. 2012.
Pretium Edge® Extension and Flush Mount Bracket for EDGE-01U; Corning Cable Systems, LLC; 2 pages; Dec. 10, 2013.
Fiber Enclosures; Hubbell Premise Wiring; 10 pages; http://ecatalog.hubbell-premise.com/ProductInformation/ViewCatalog.aspx?Dest=hubbell-premise.com/literature/ecatalog/i.pdf; printed Sep. 25, 2015.
OptiMo® Ultra High Density Pre-terminated Fiber Optic Solutions; Legrand® Ortronics; 1 page; undated.

* cited by examiner

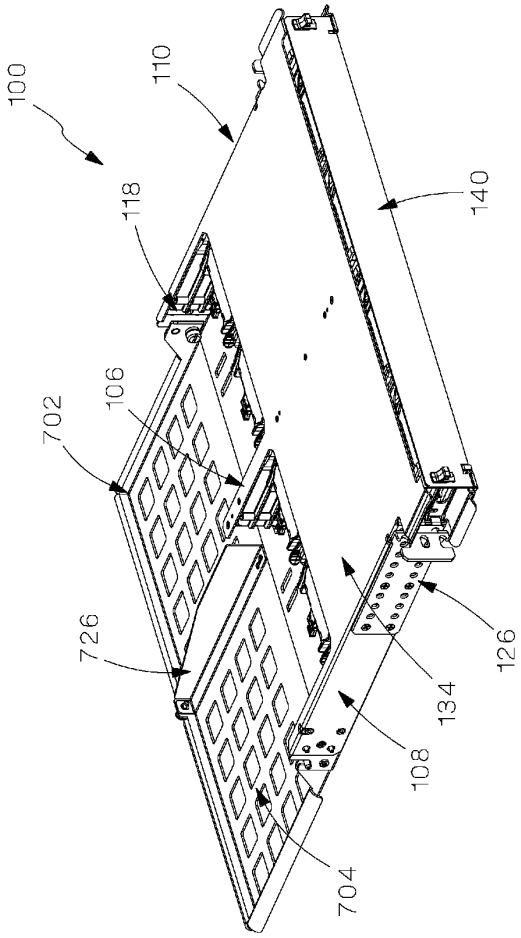

FIG. 1

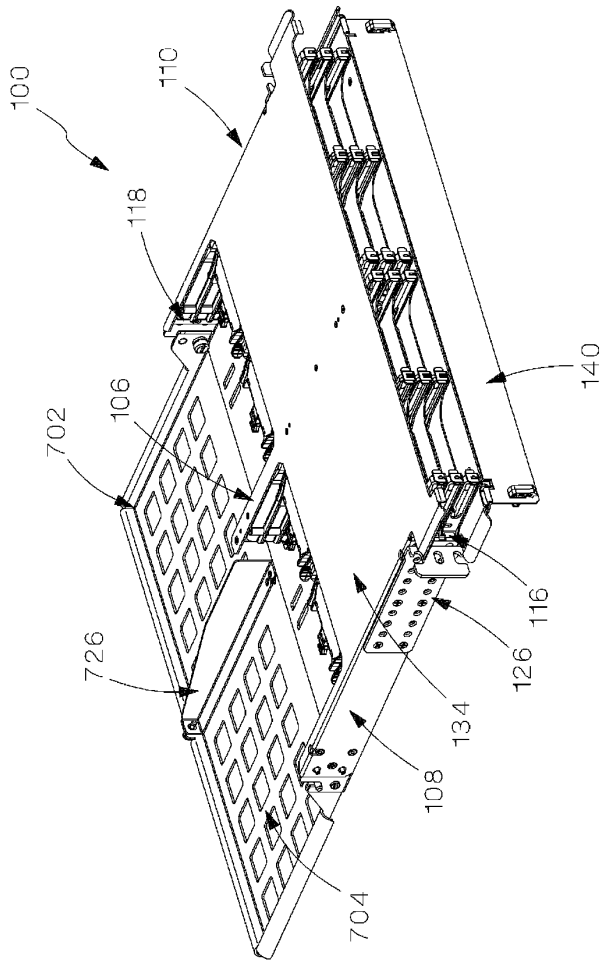

FIG.2

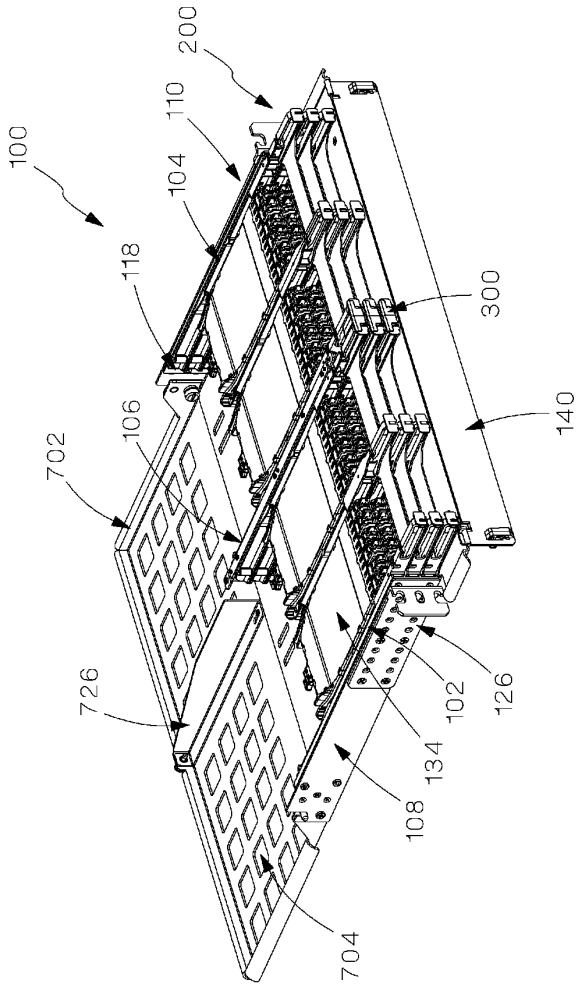

FIG.3

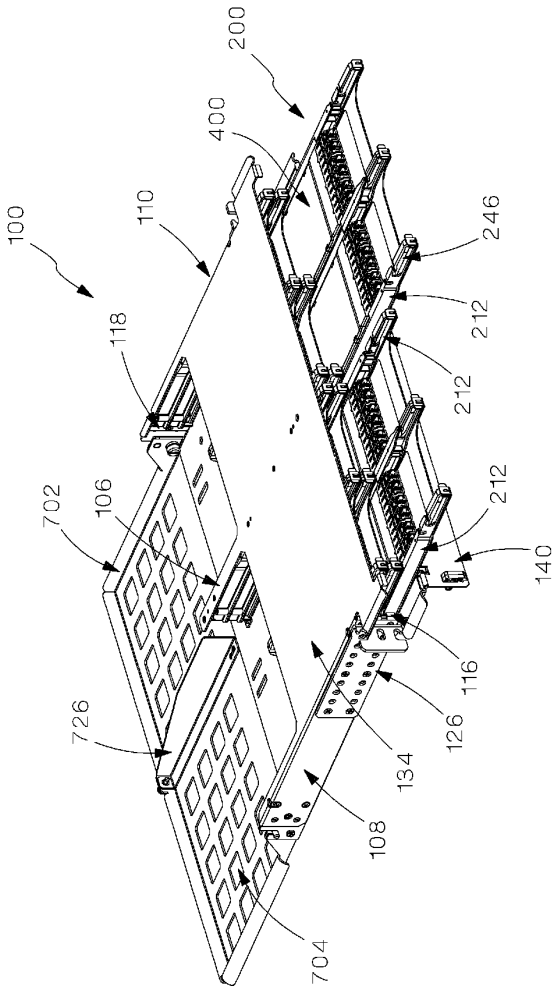
100
110
118
702
106
726
704
108
134
126
116
140
212
212
212
246
400
200

FIG. 4

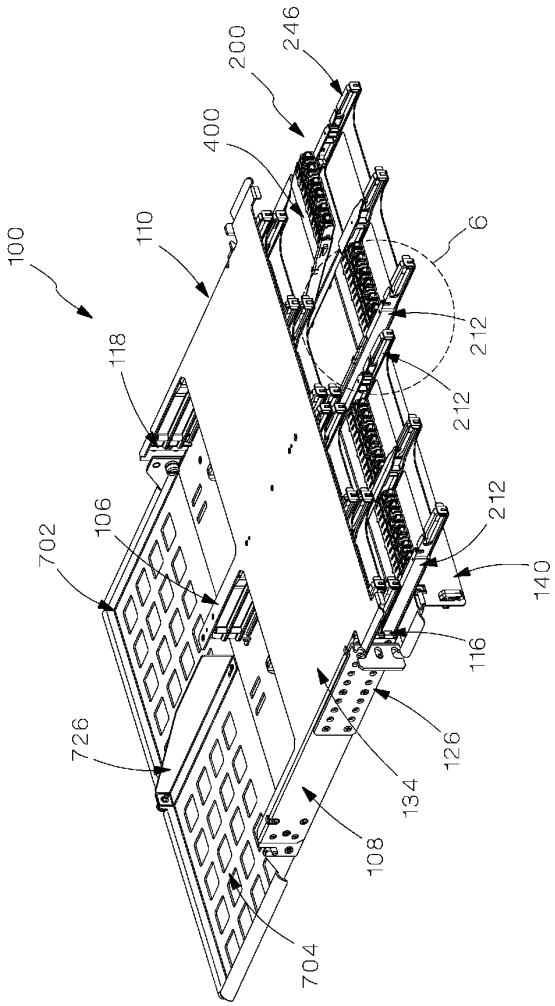
100
110
118
702
106
726
704
108
134
126
116
140
212
212
212
6
400
200
246

FIG.5

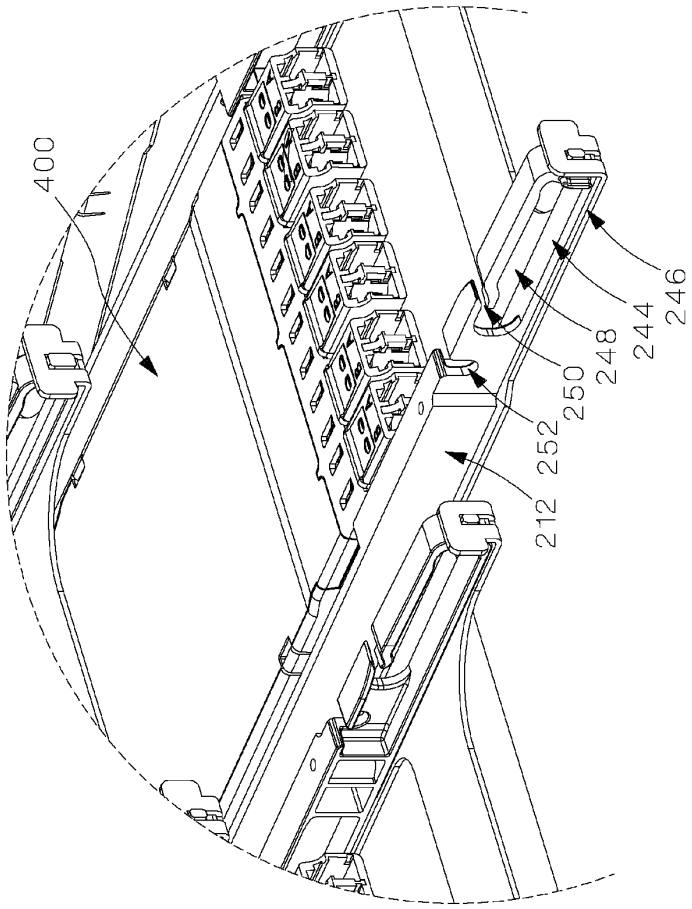

FIG.6

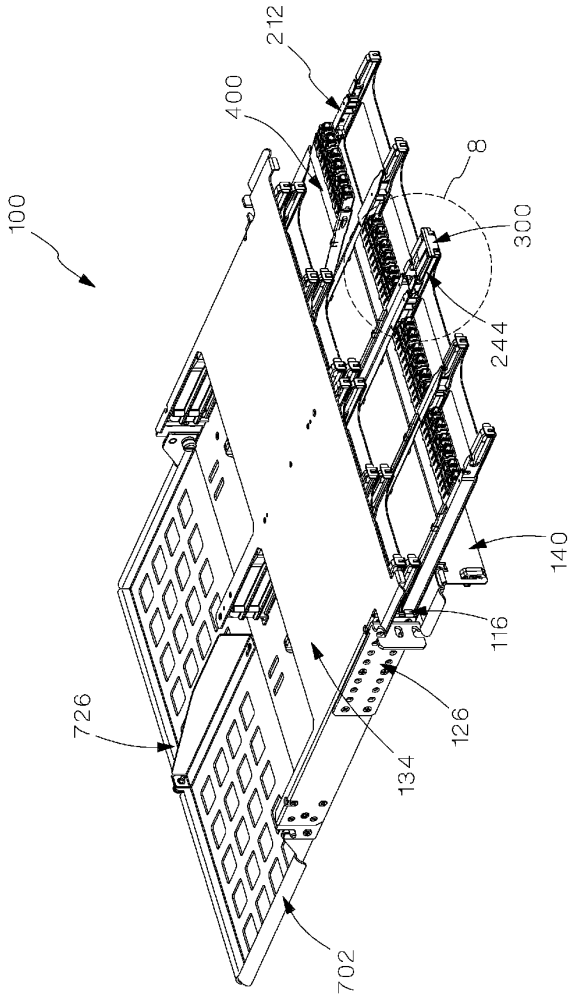

FIG. 7

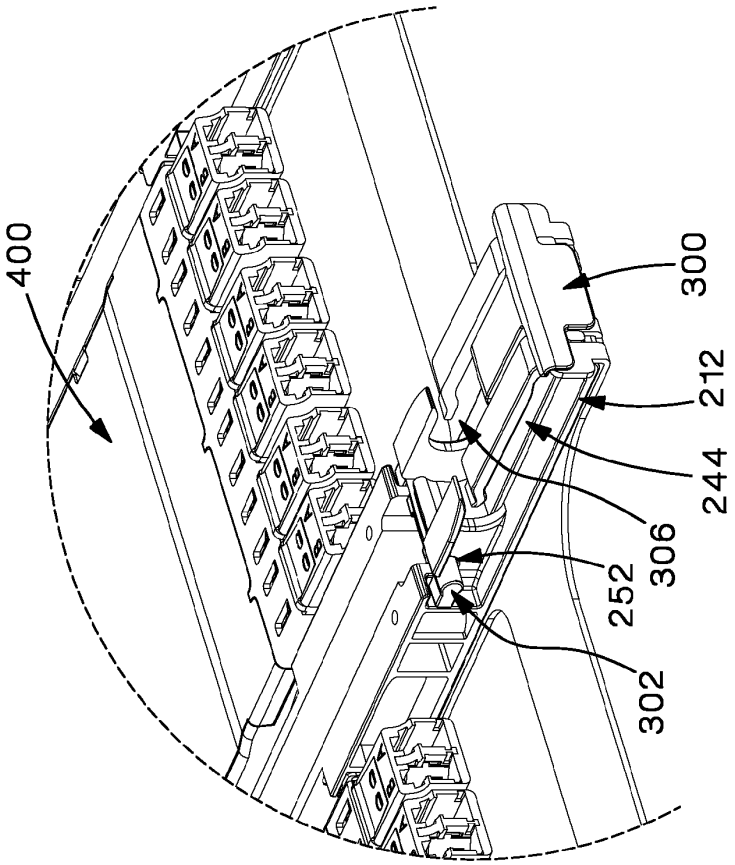

FIG.8

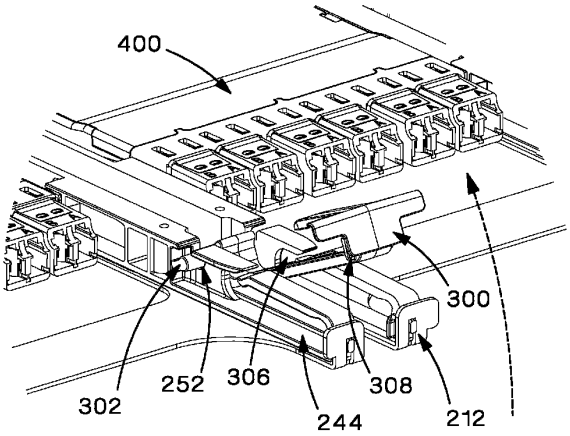

FIG.9

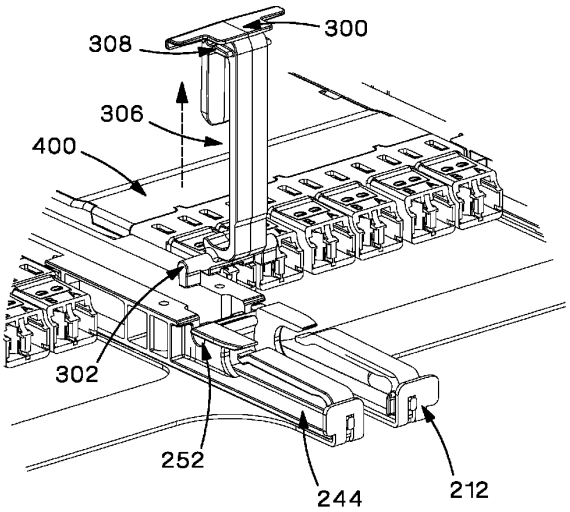

FIG.10

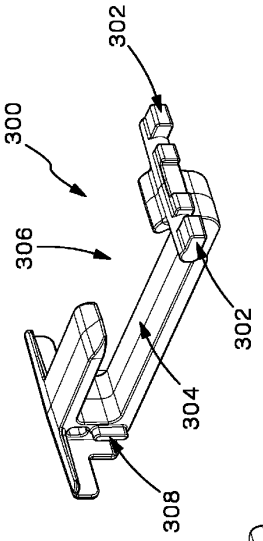

FIG.12

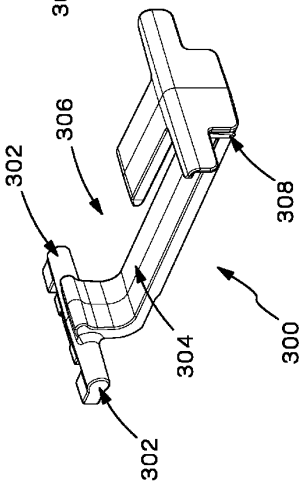

FIG.11

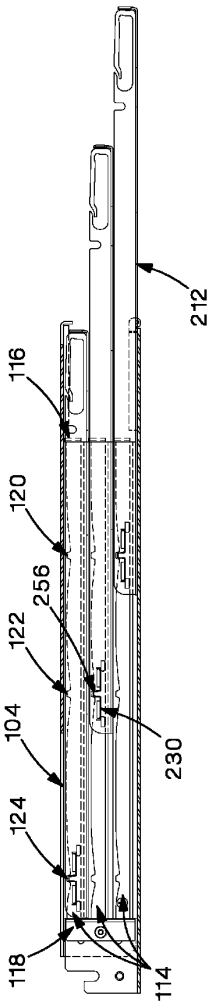
212
116
120
256
122
104
124
118
114
230

FIG.13

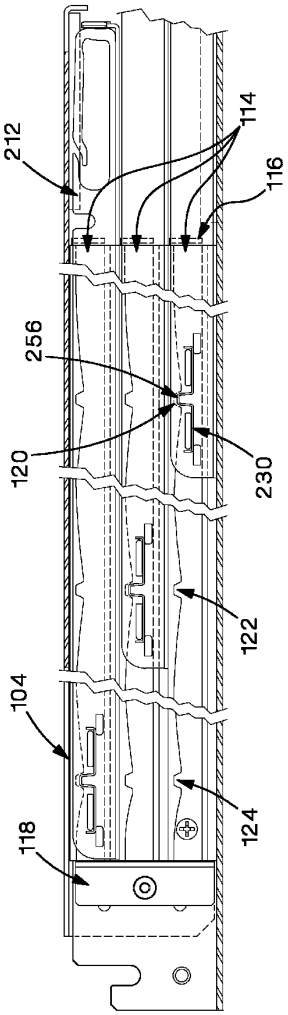
212
114
116
256
120
230
122
104
124
118

FIG.14

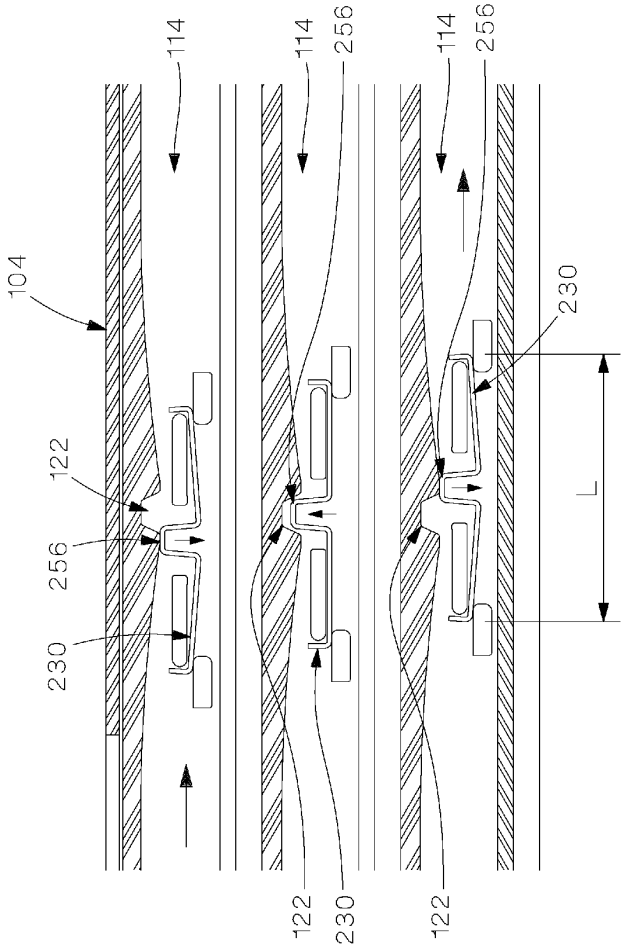

FIG.15

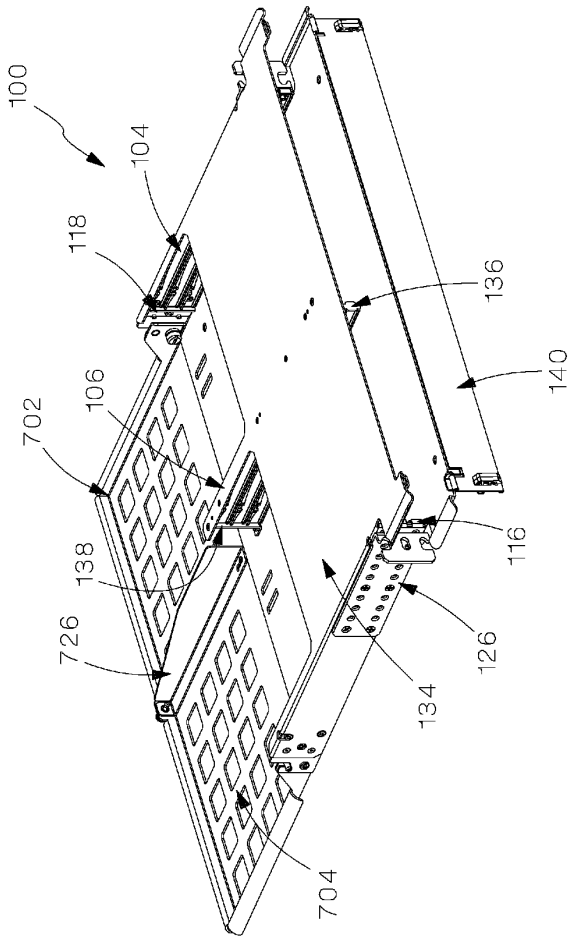

FIG. 16

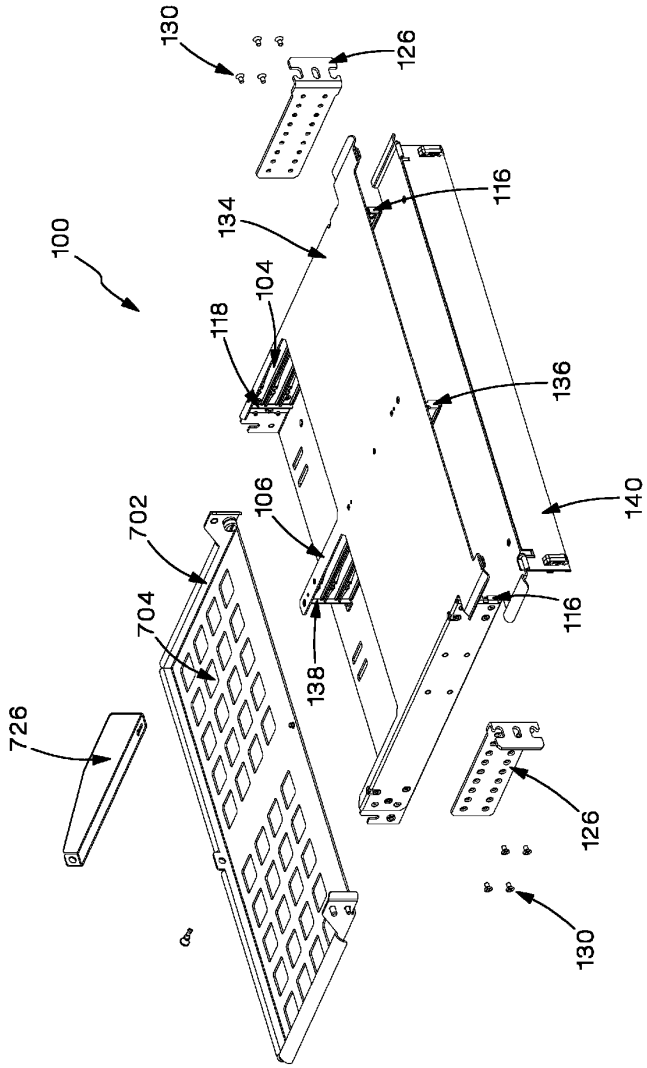
130
126
100
134
116
118
104
136
702
106
140
704
116
138
726
126
130

FIG.17

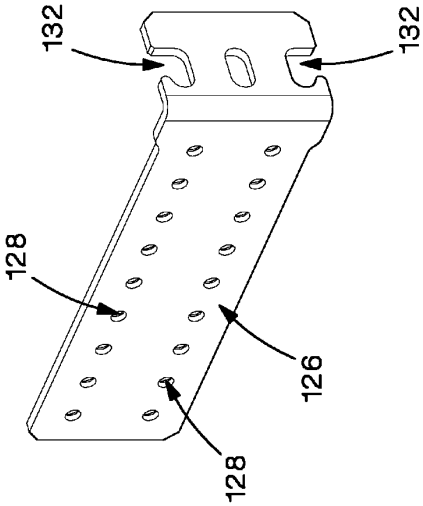

FIG.19

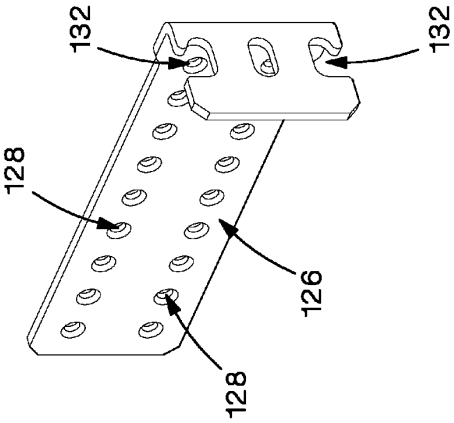

FIG.18

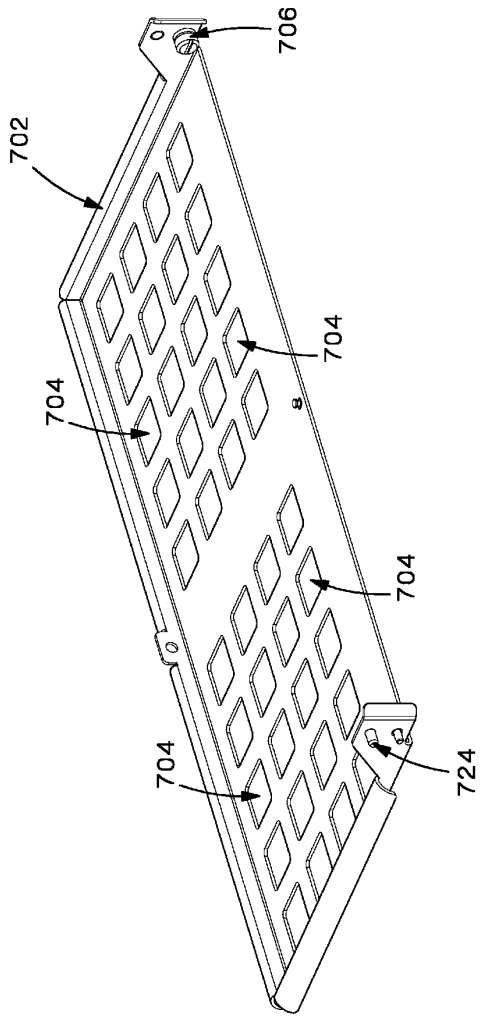

FIG.20

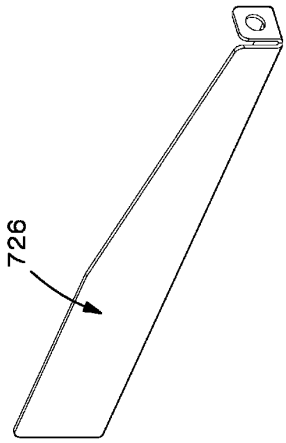

FIG.21B

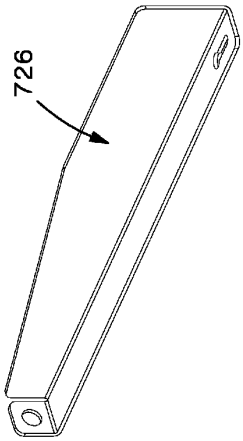

FIG.21A

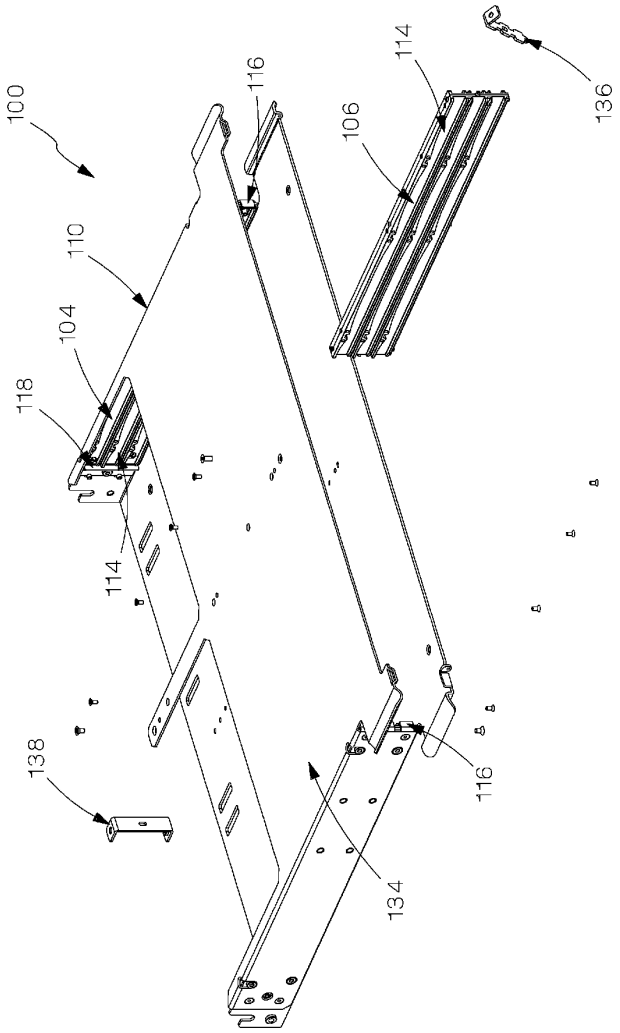

FIG.22

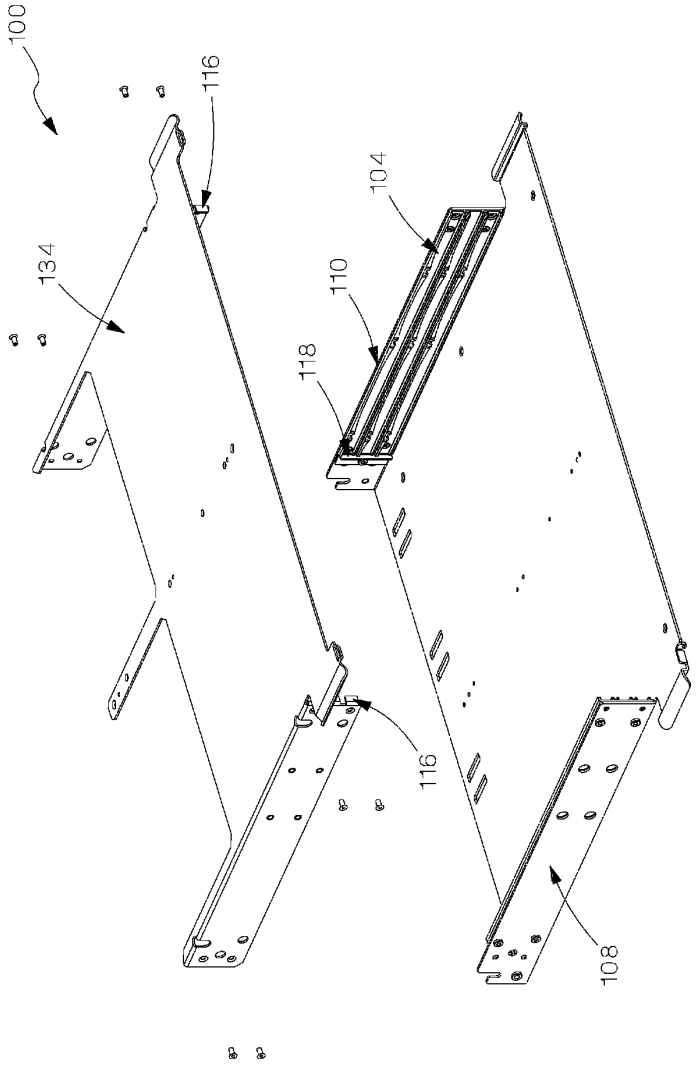

FIG.23

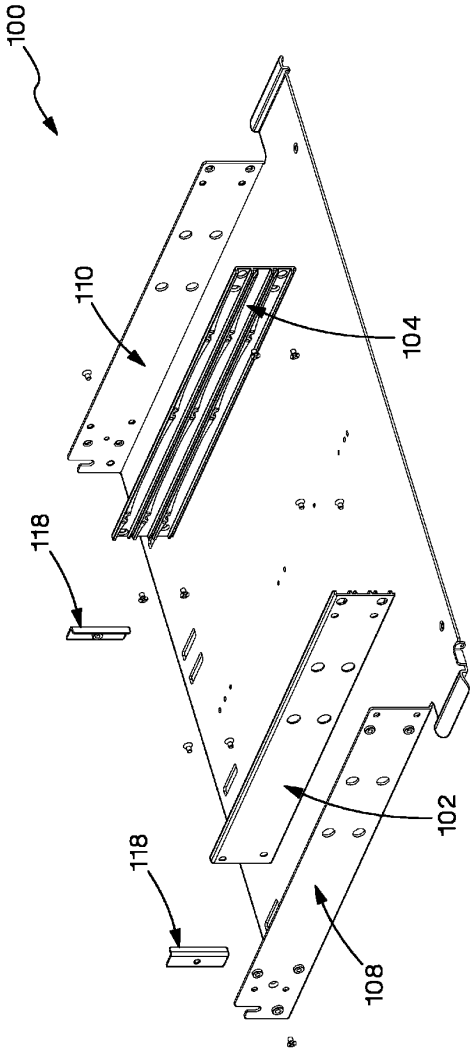

FIG.24

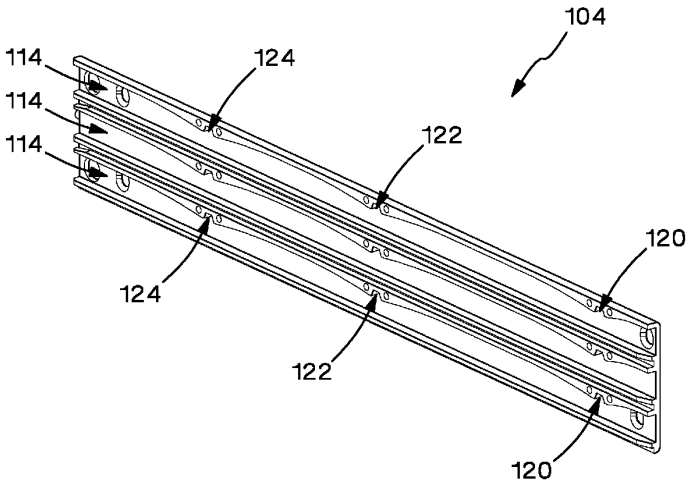

FIG.25A

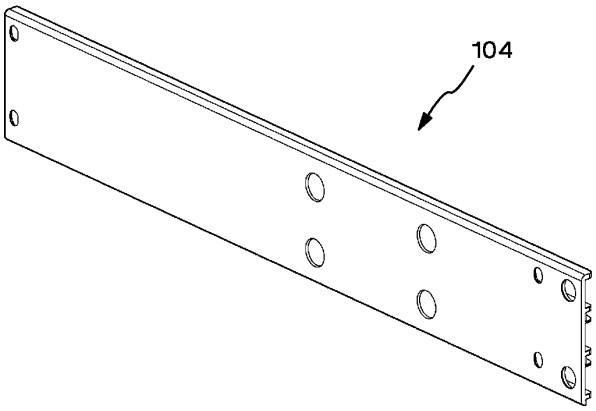

FIG.25B

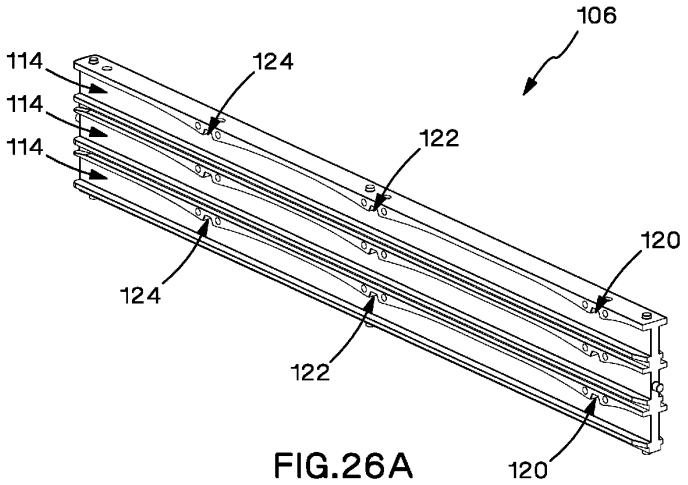

FIG.26A

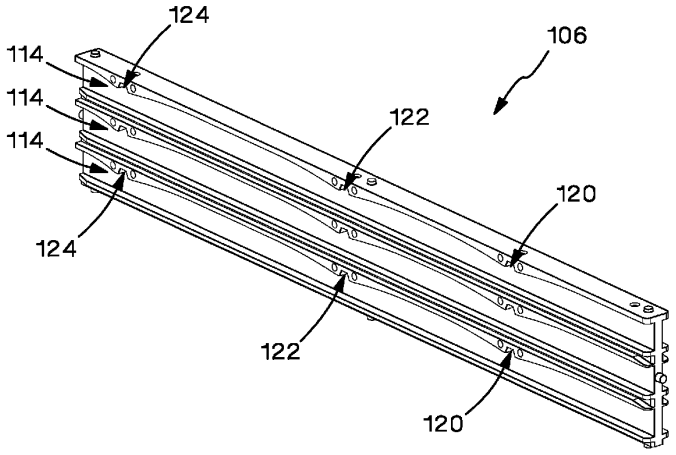

FIG.26B

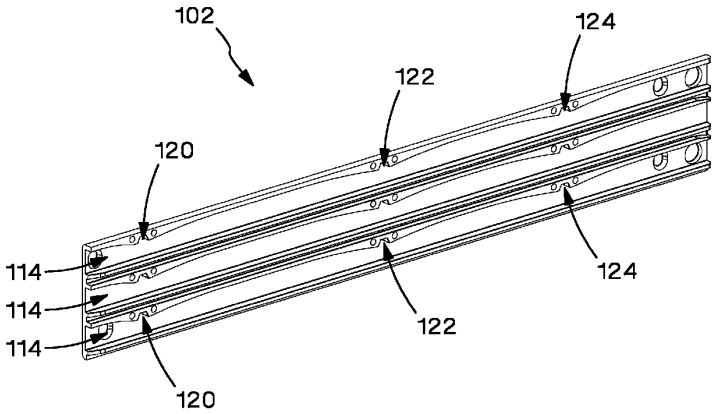

FIG.27A

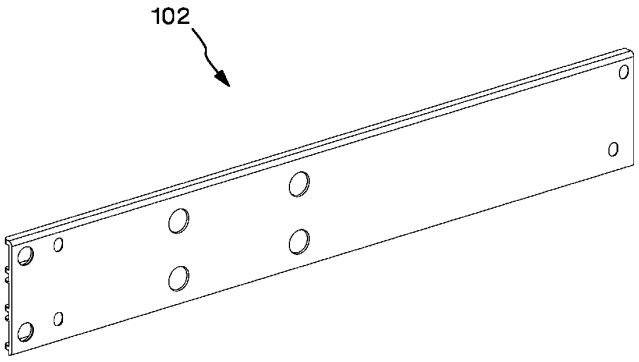

FIG.27B

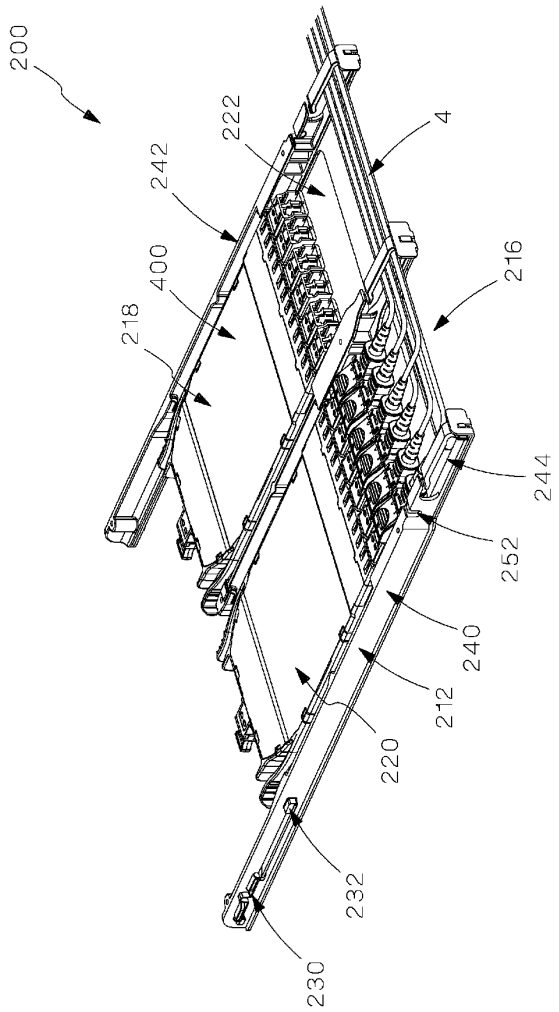

FIG.28

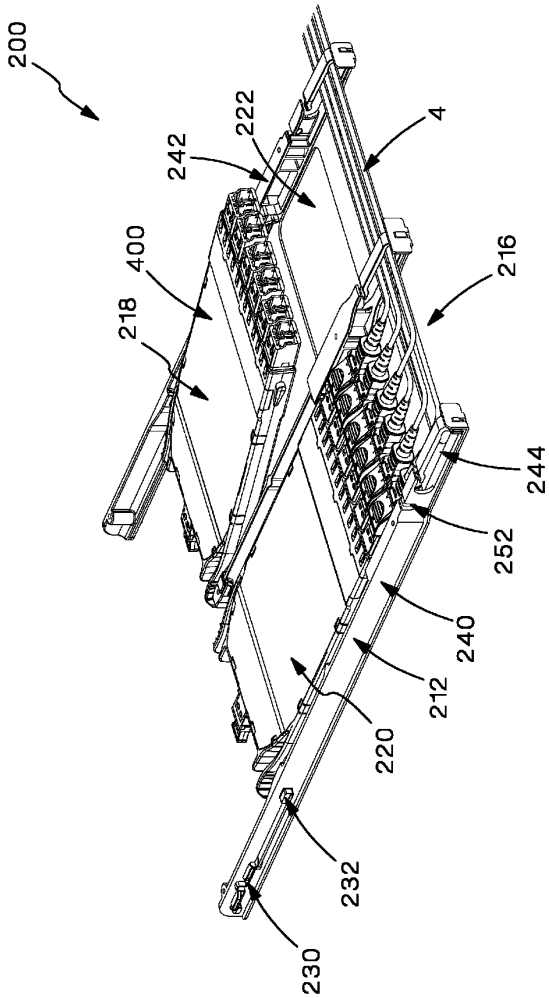

FIG.29

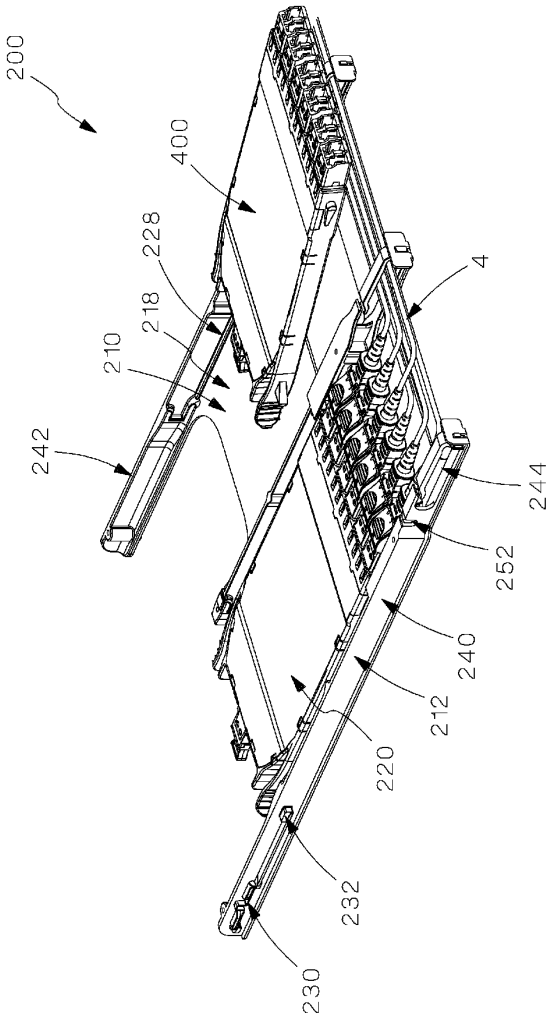

FIG.30

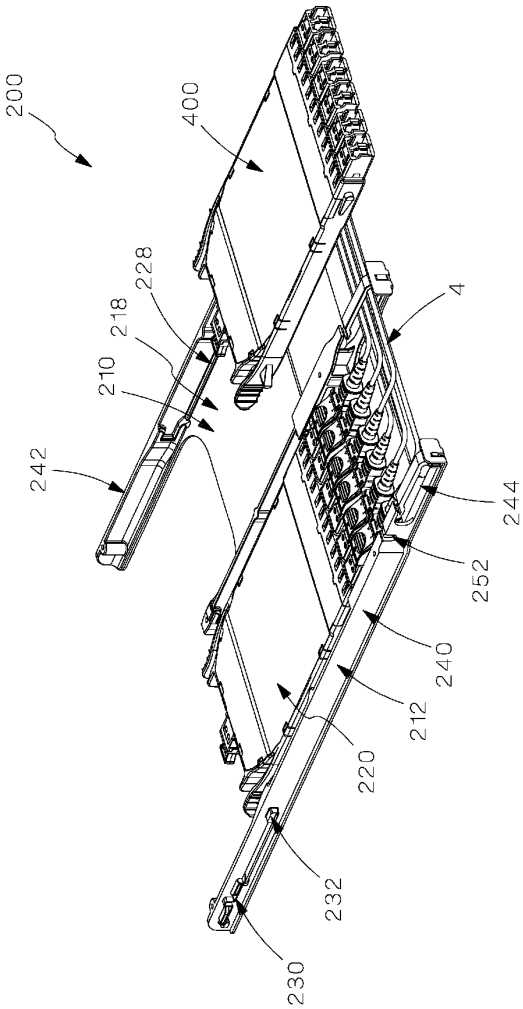

FIG. 31

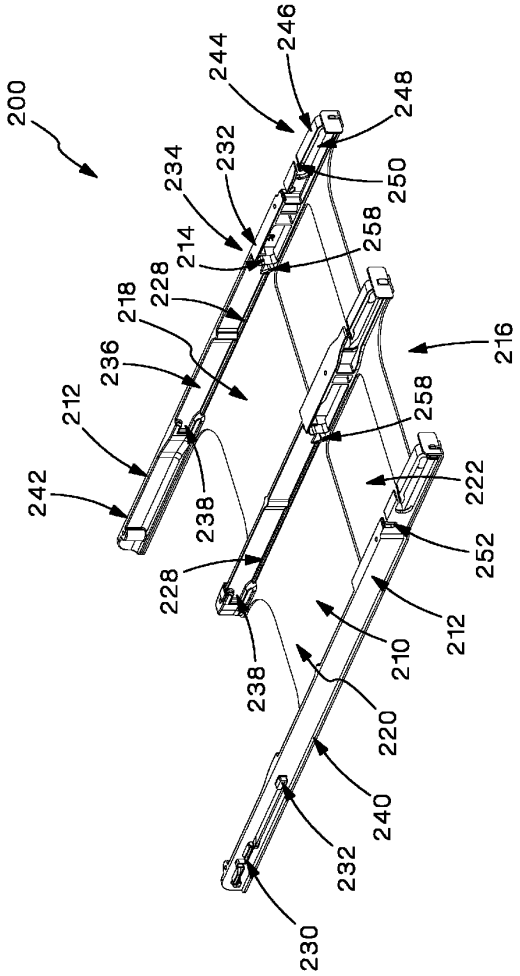
200
244
246
248
250
232
234
214
258
228
218
236
216
212
258
242
238
222
252
228
212
210
238
220
240
232
230

FIG.32

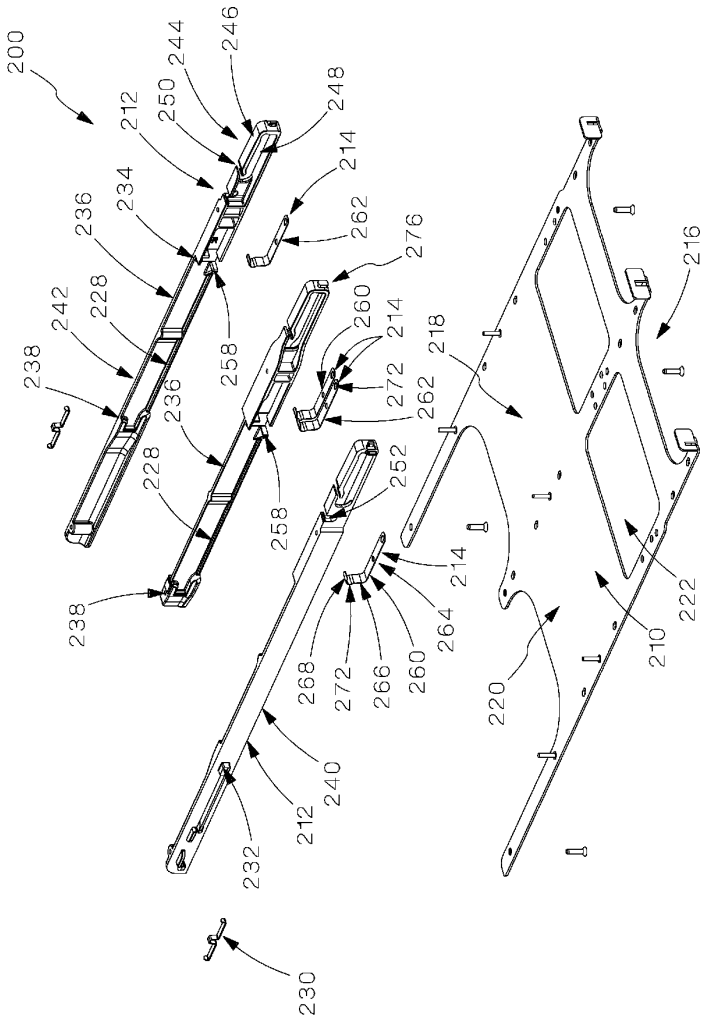
200
212
250
244
246
248
214
262
276
234
236
228
242
238
258
260
214
272
262
218
216
236
228
258
252
238
214
264
268
272
266
260
220
210
222
240
212
232
230

FIG.33

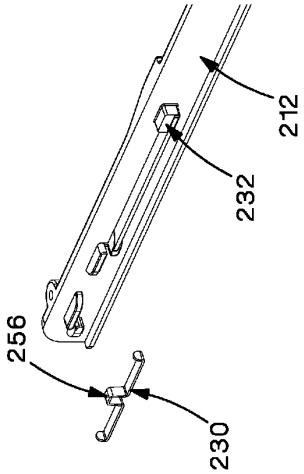

FIG.34B

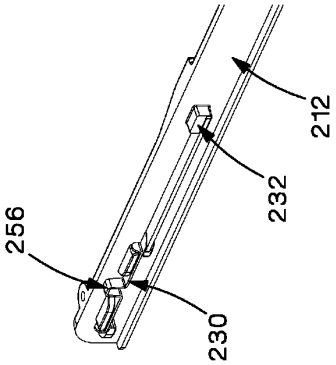

FIG.34A

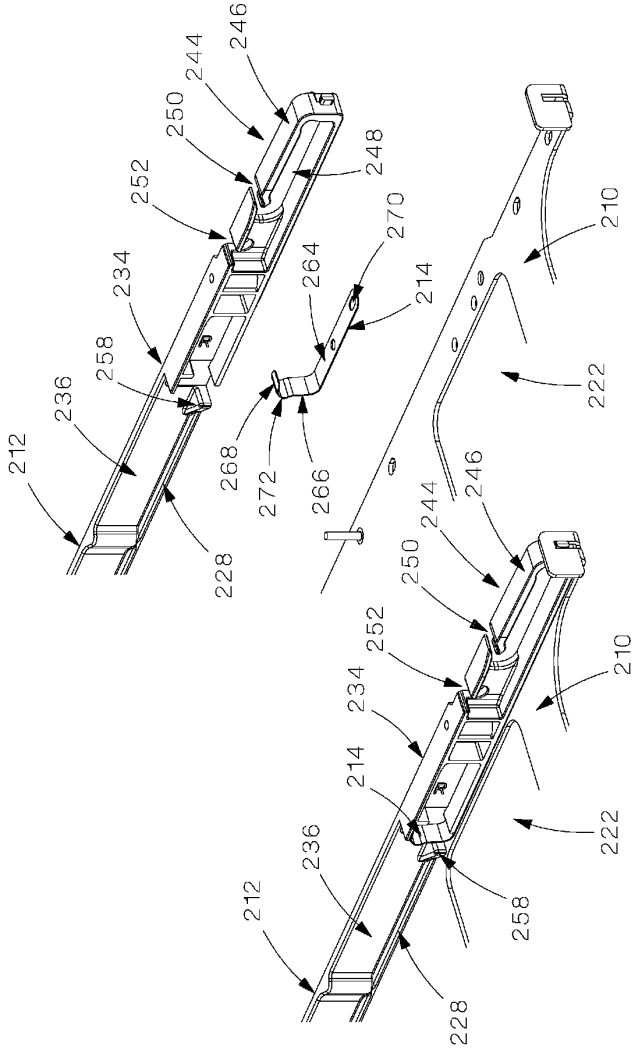

FIG.35B

FIG.35A

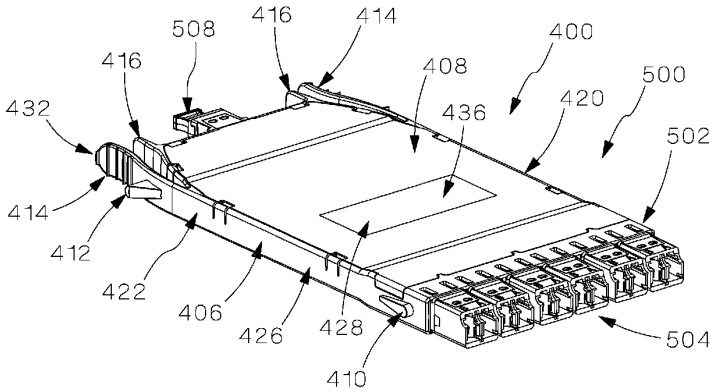

FIG.36A

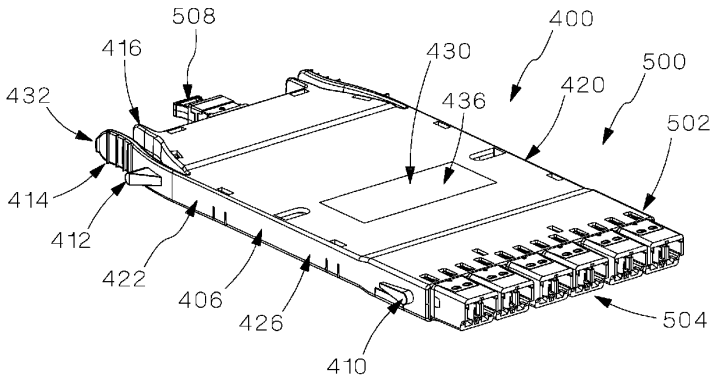

FIG.36B

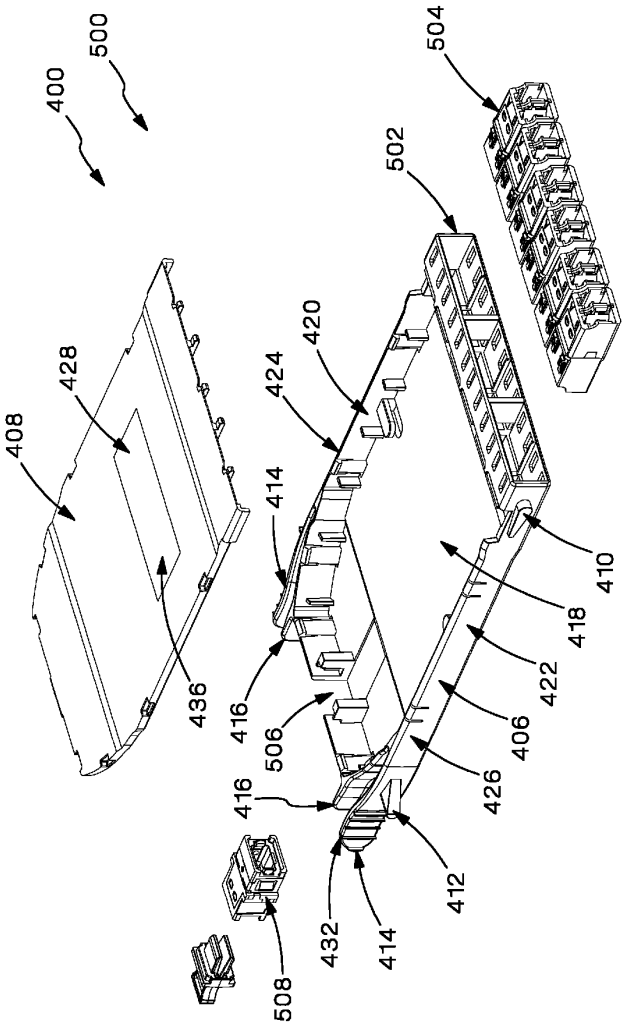
400
500
504
502
420
424
428
408
414
410
418
422
406
426
416
506
416
436
412
414
432
508

FIG.37

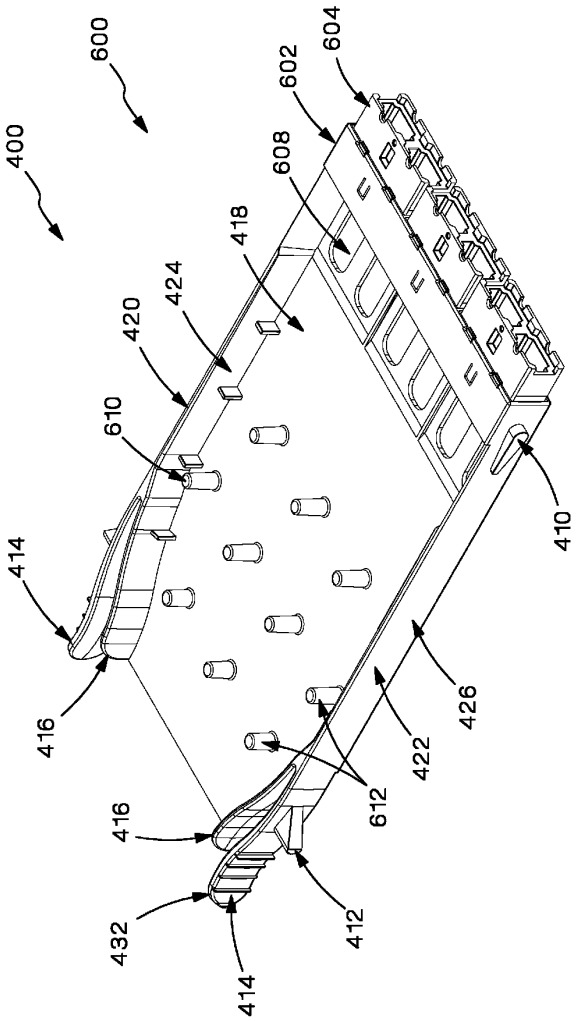
400
600
604
602
608
418
424
420
610
414
416
416
432
414
412
612
422
426
410

FIG.38

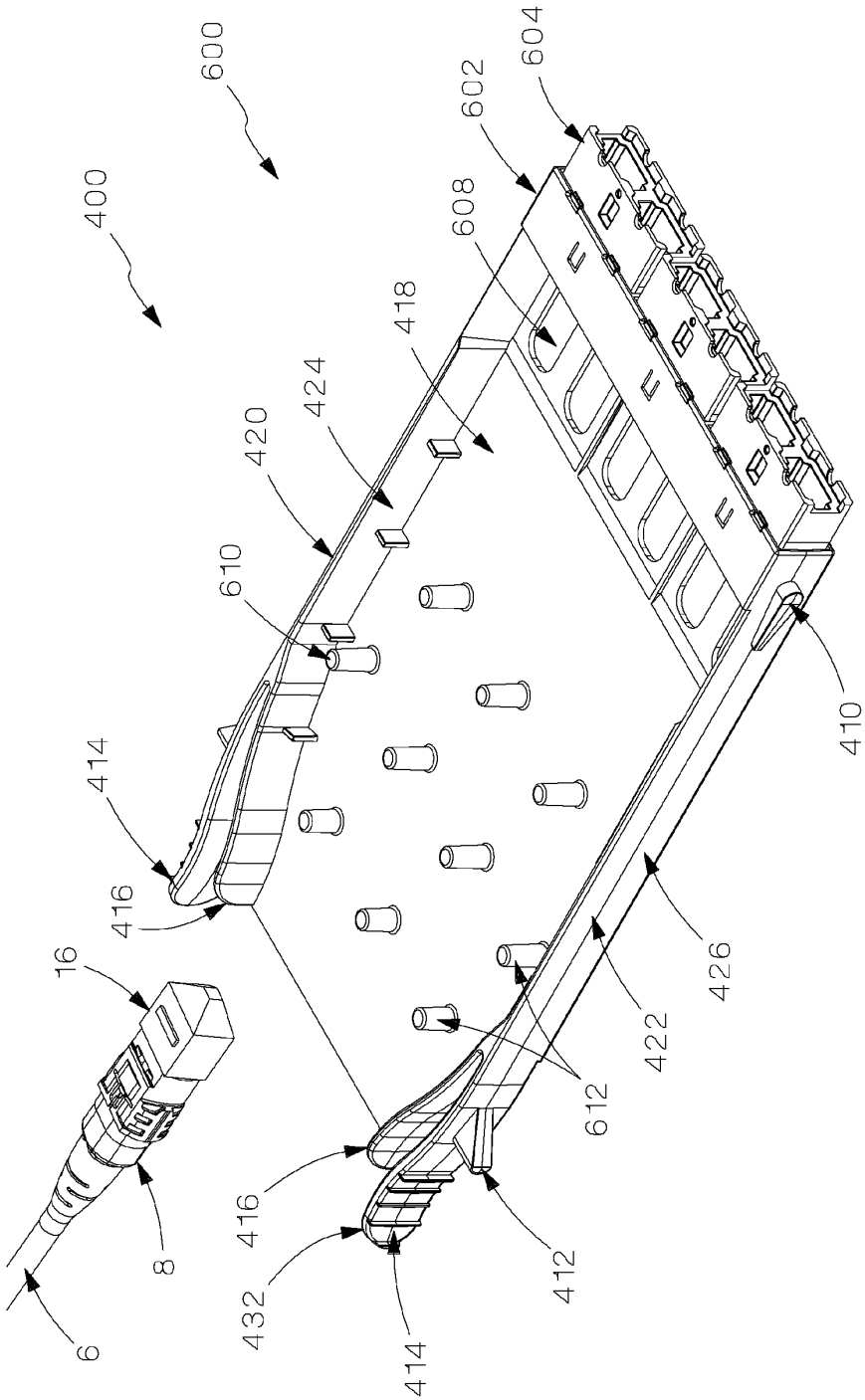
600
400
604
602
608
418
424
420
610
414
416
16
8
6
416
432
414
612
412
422
426
410

FIG. 39

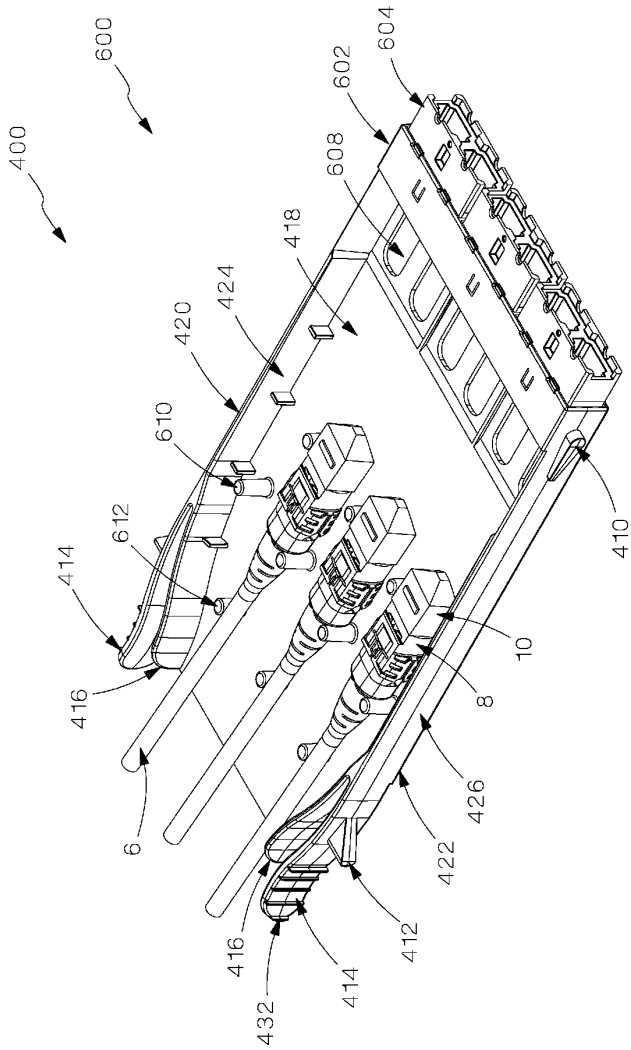
400
600
604
602
608
418
424
420
610
612
414
416
6
10
8
410
426
422
412
414
416
432

FIG.40

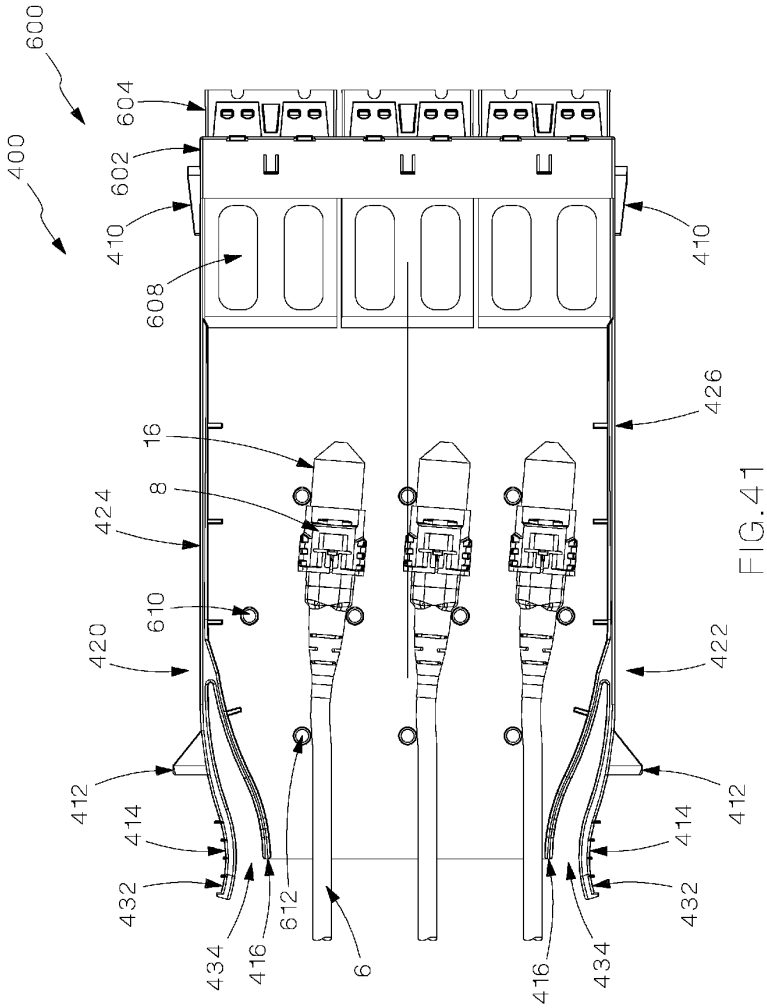
600
400
604
602
410
608
16
8
424
610
420
412
414
432
434
416
612
6
426
422
410
412
414
432
434
416

FIG. 41

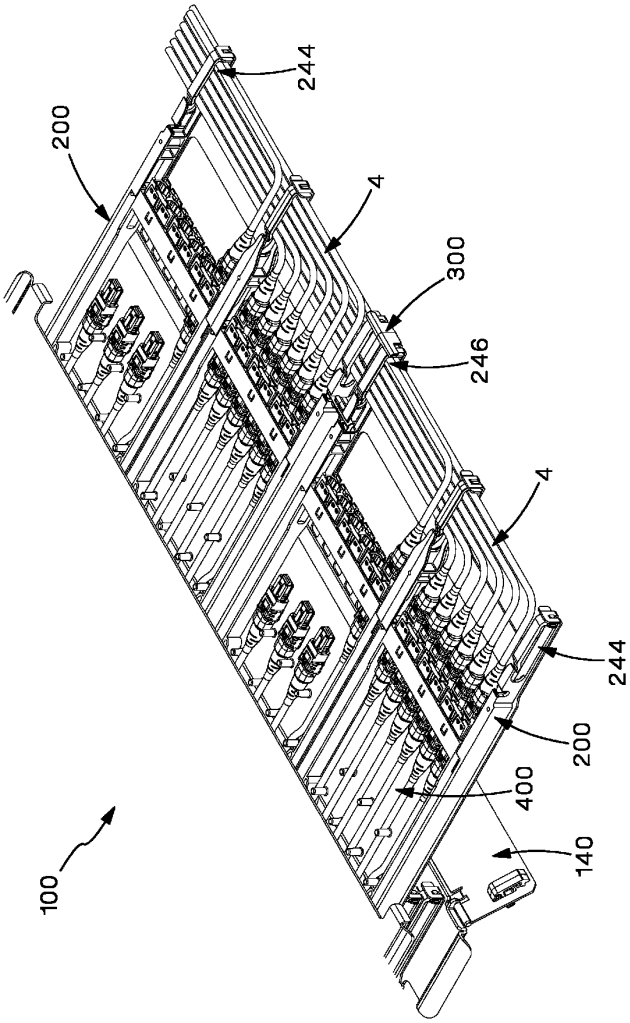

FIG.42

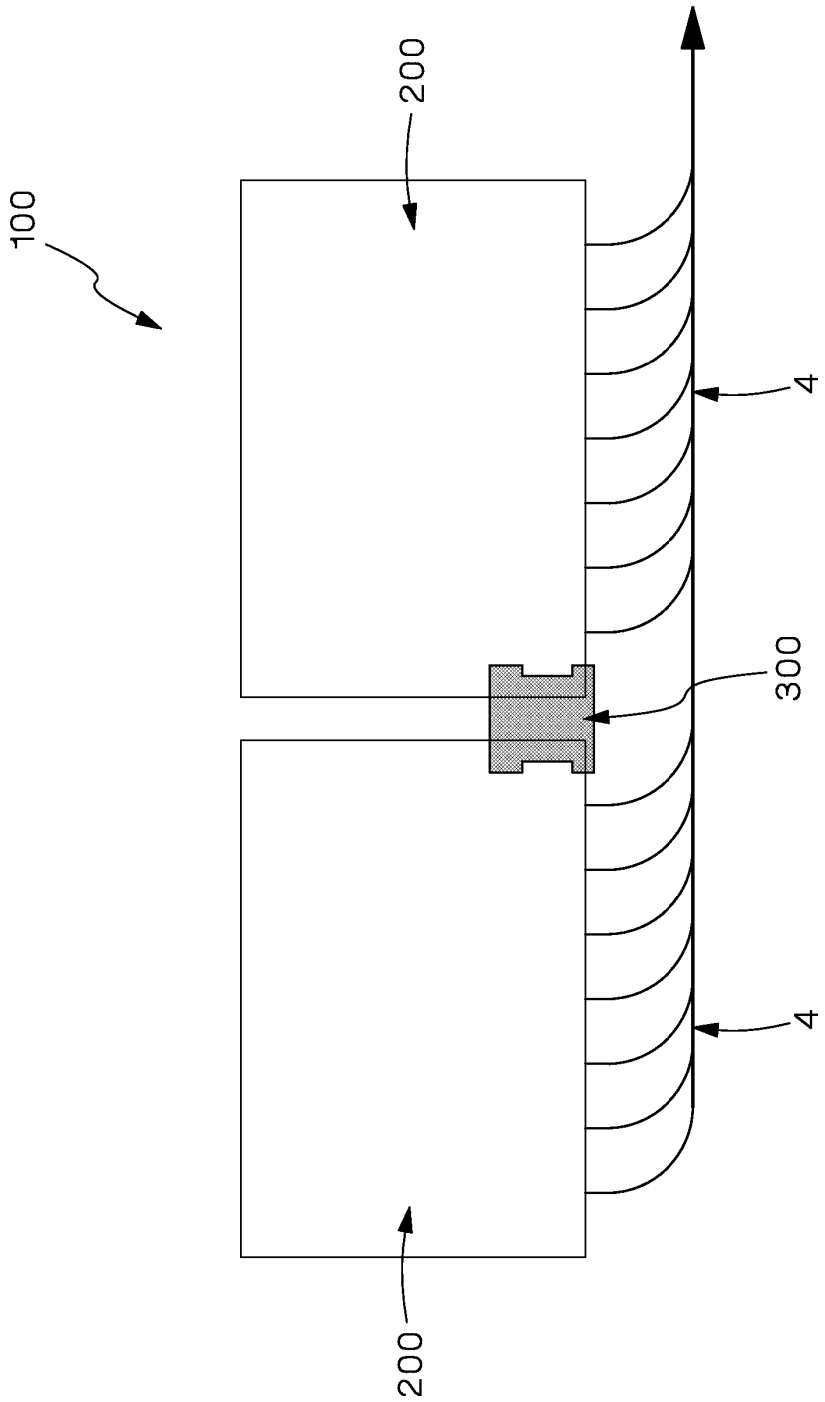

FIG.43

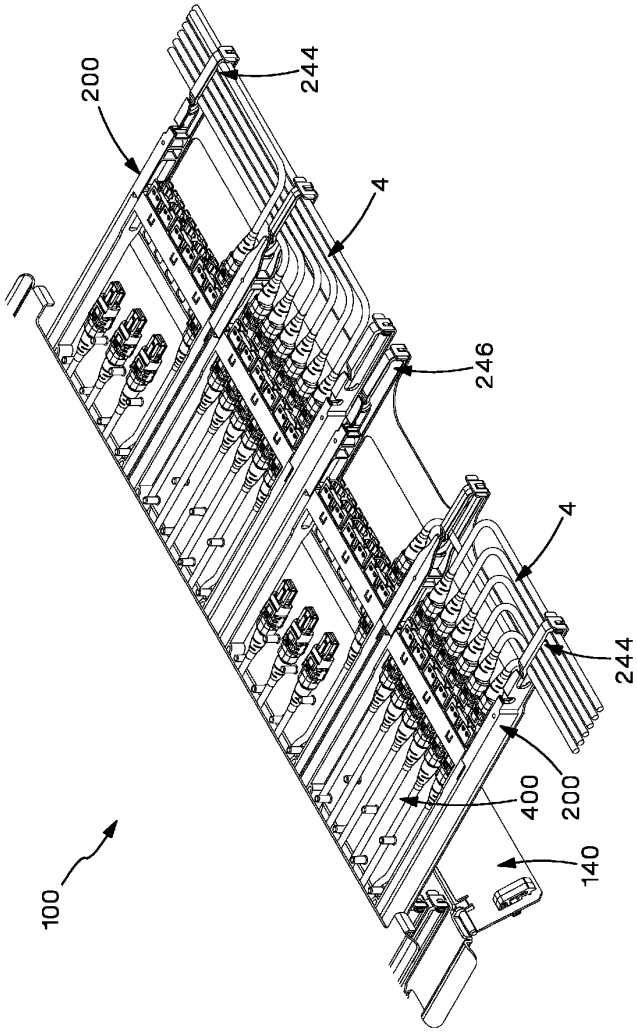

FIG. 44

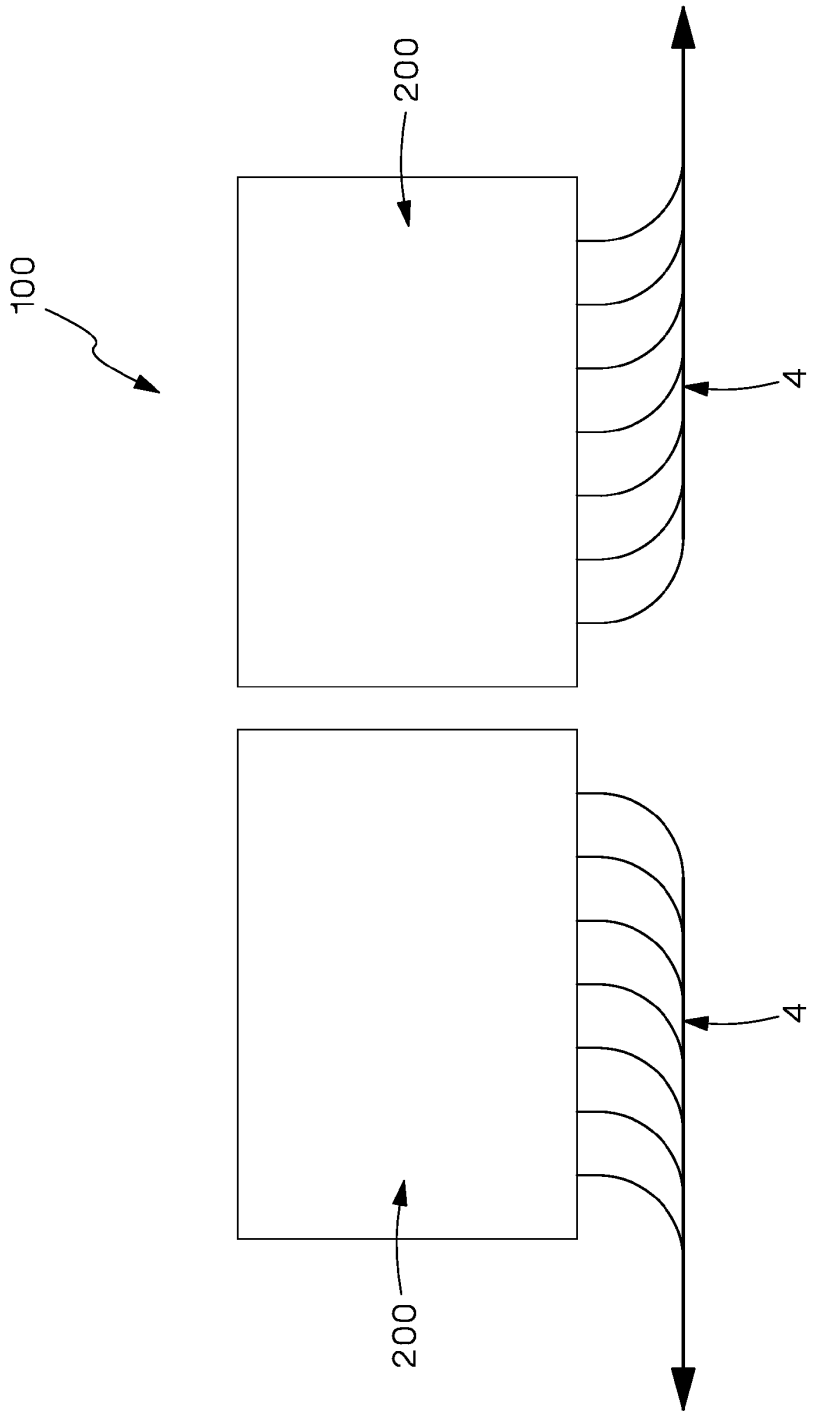

FIG.45

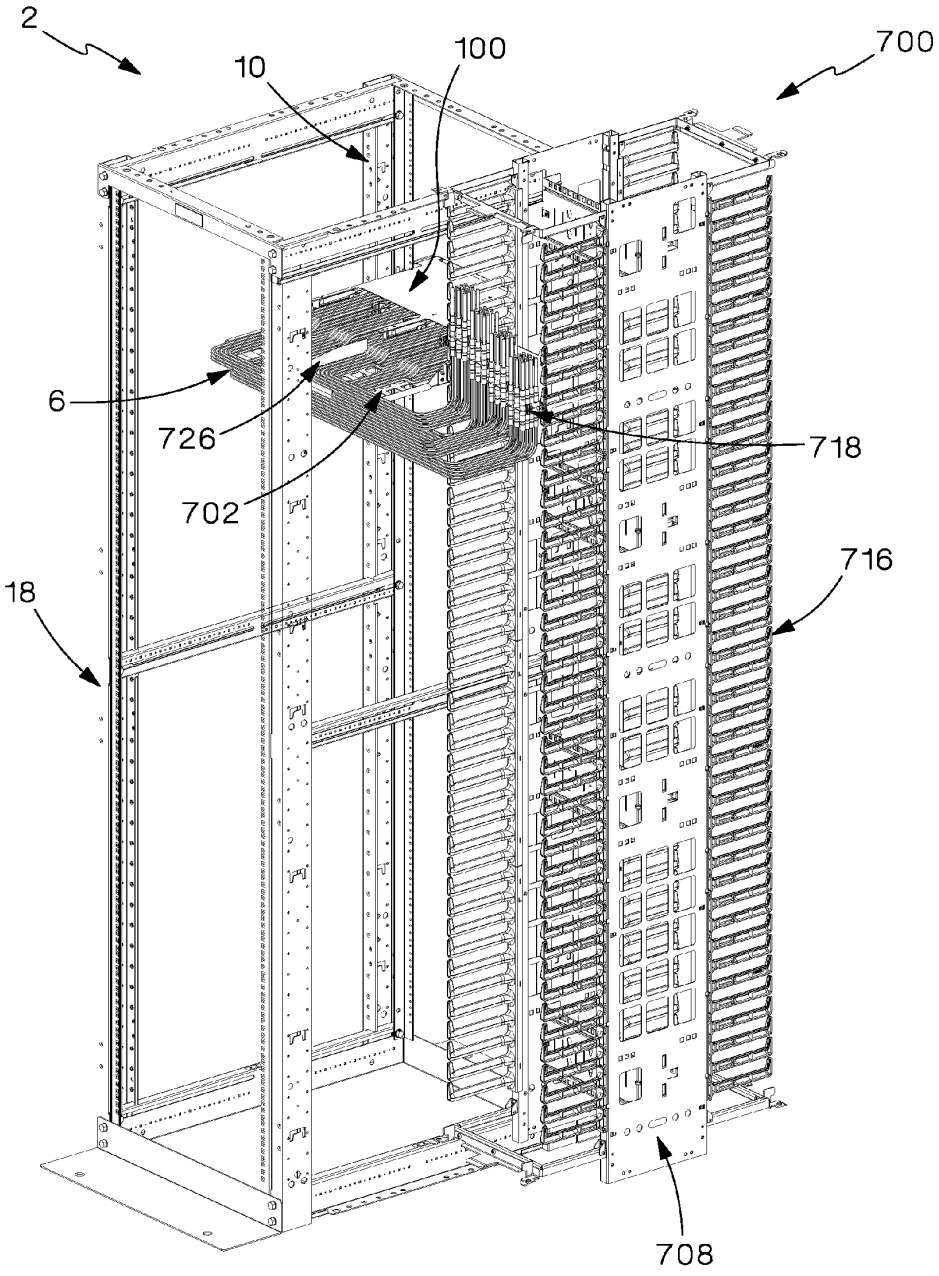

FIG.46

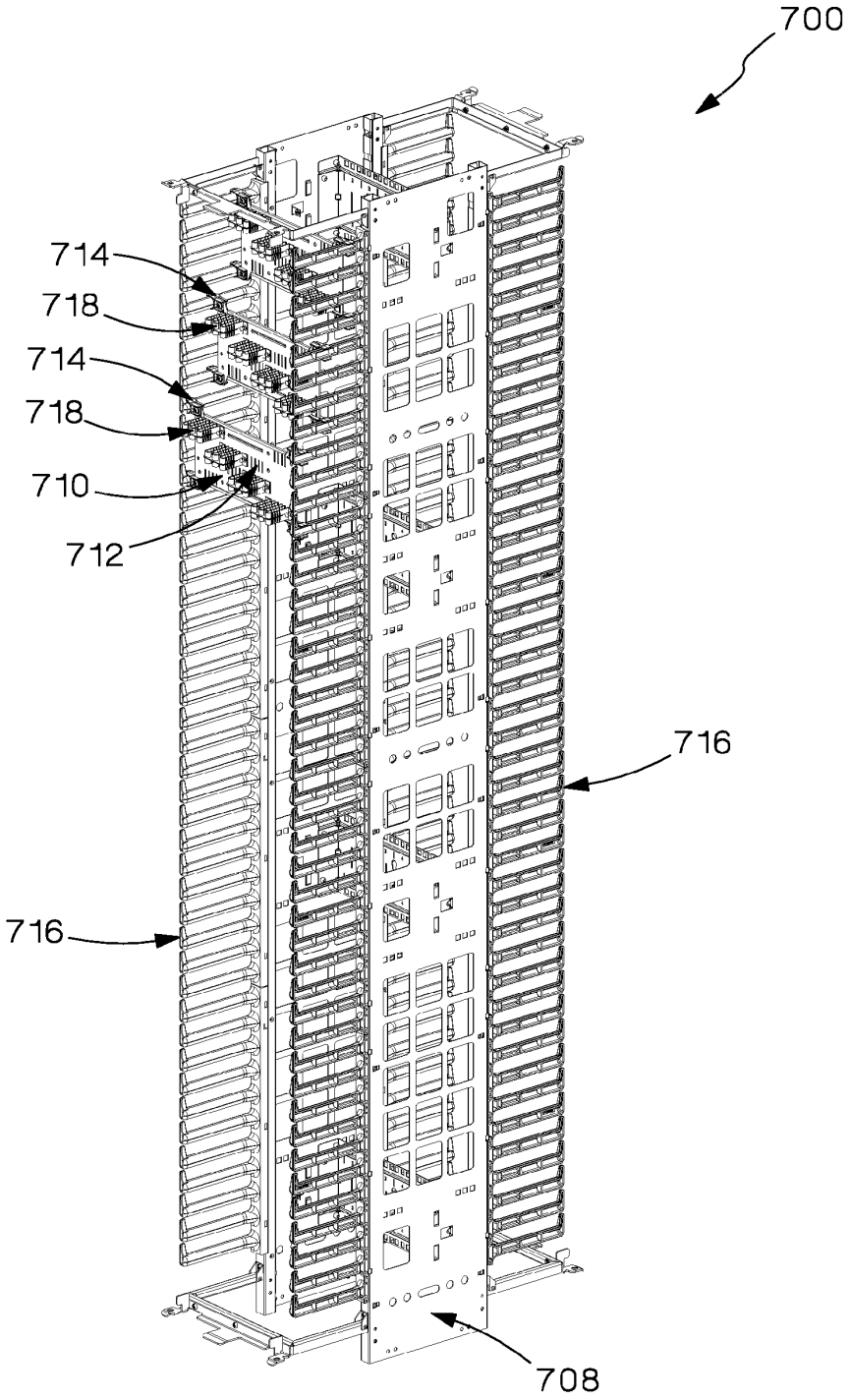

FIG.47

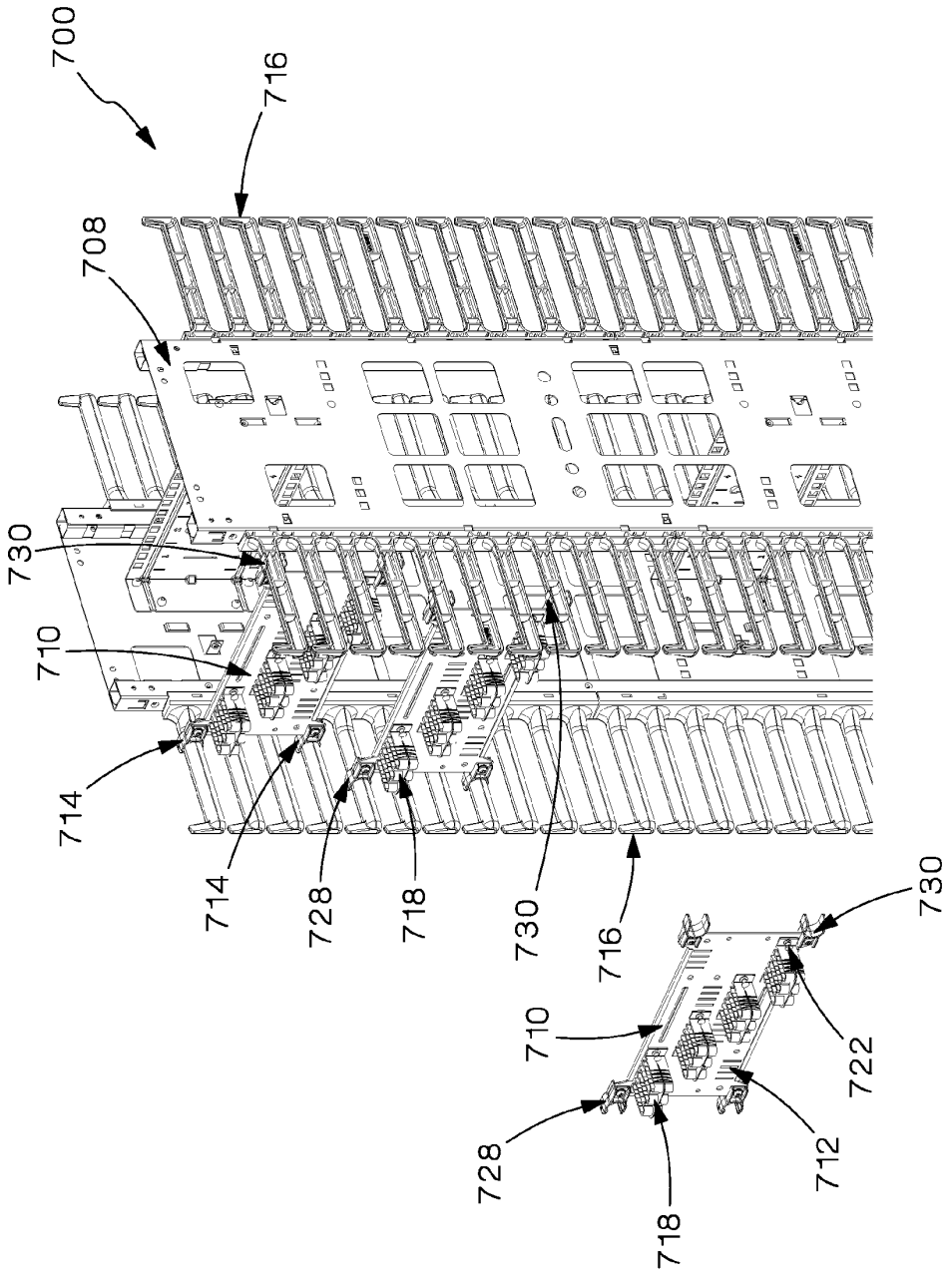
700
716
708
730
710
714
714
728
718
730
716
730
710
722
728
712
718

FIG. 48

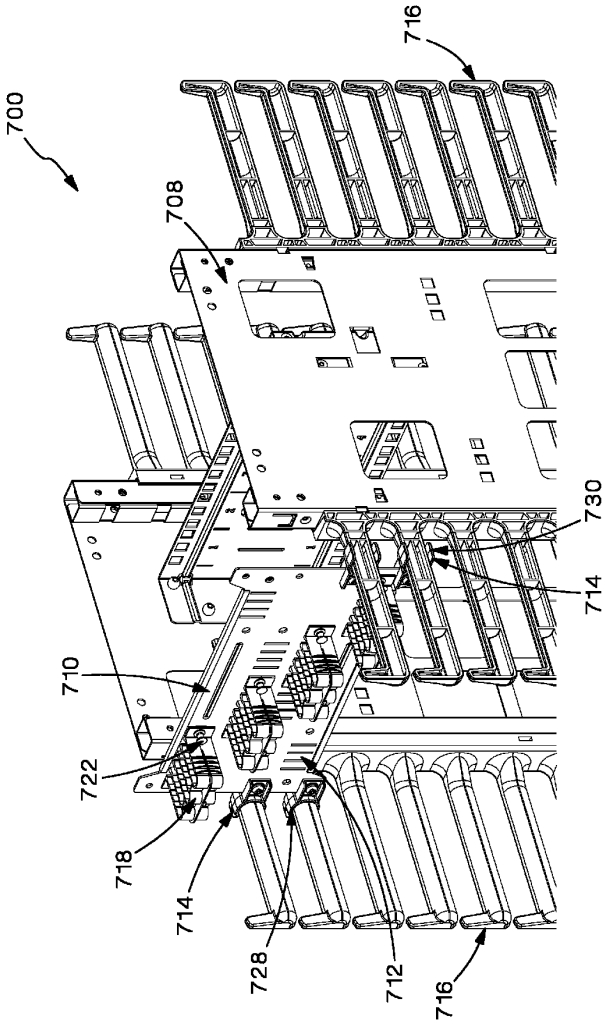

FIG.49

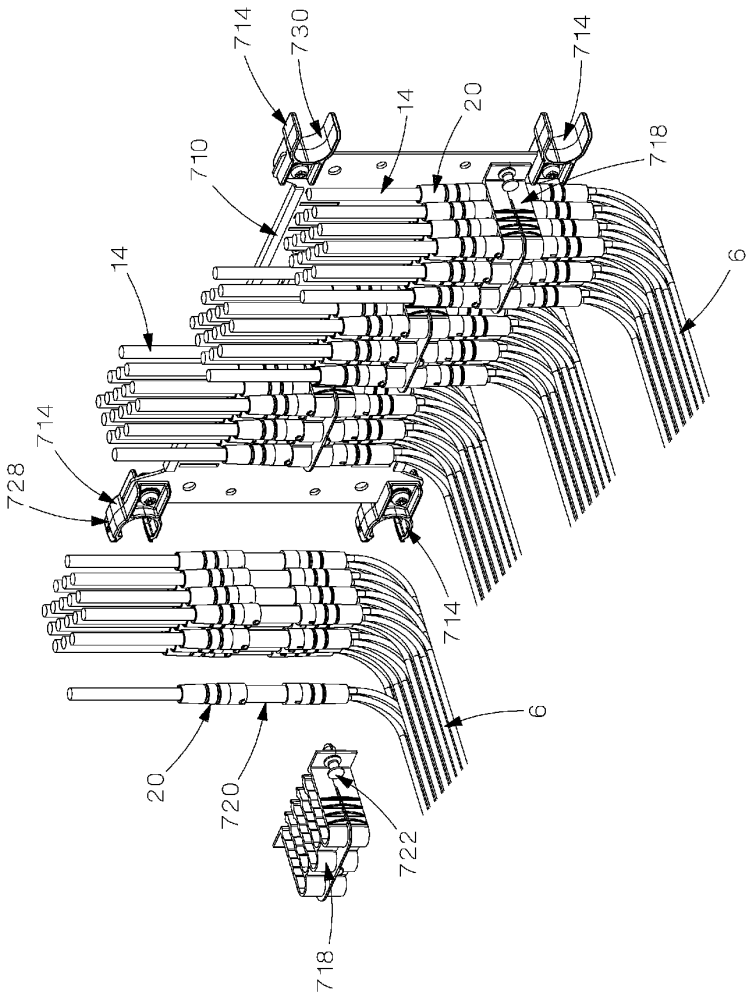

FIG.50

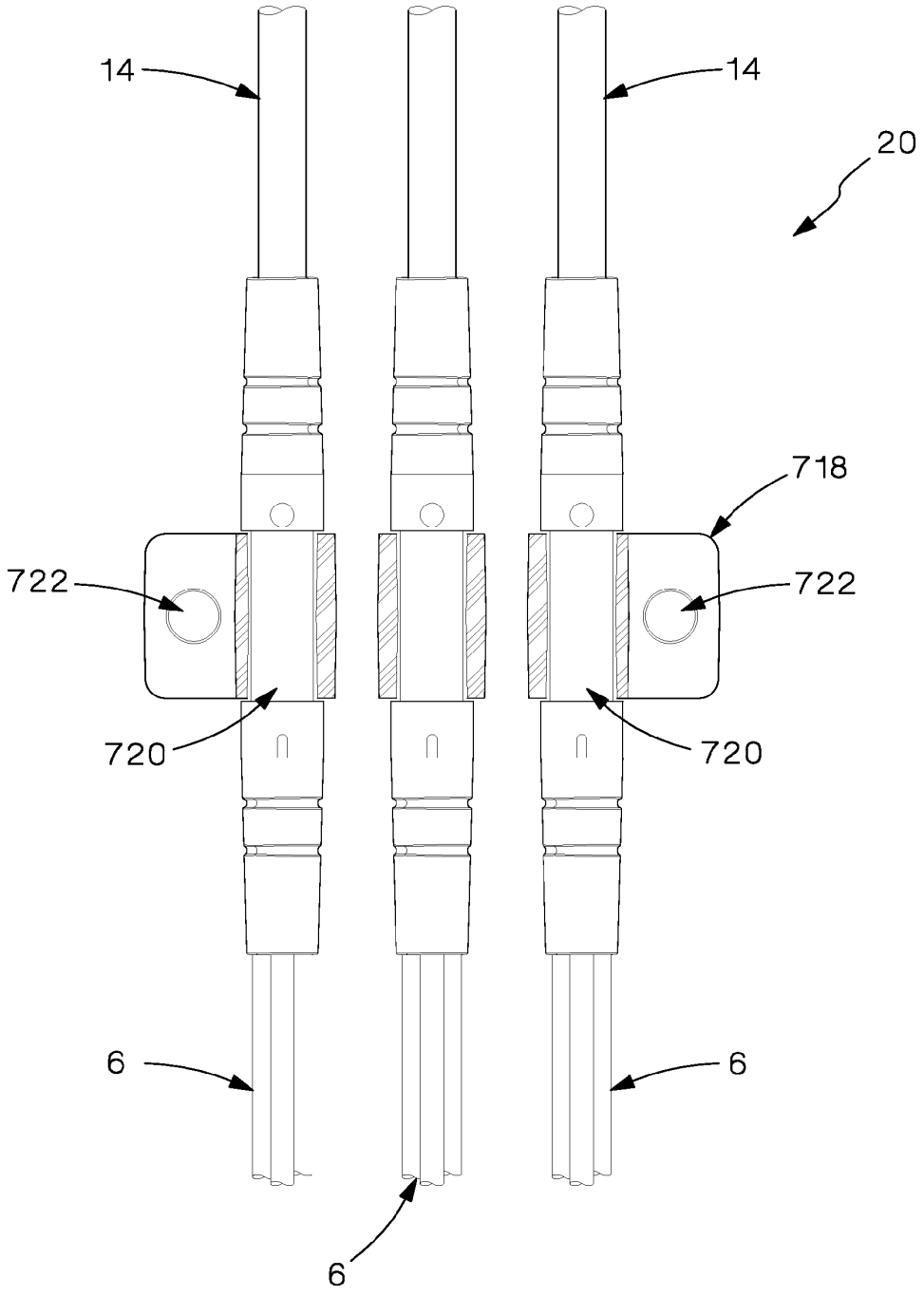

FIG.51

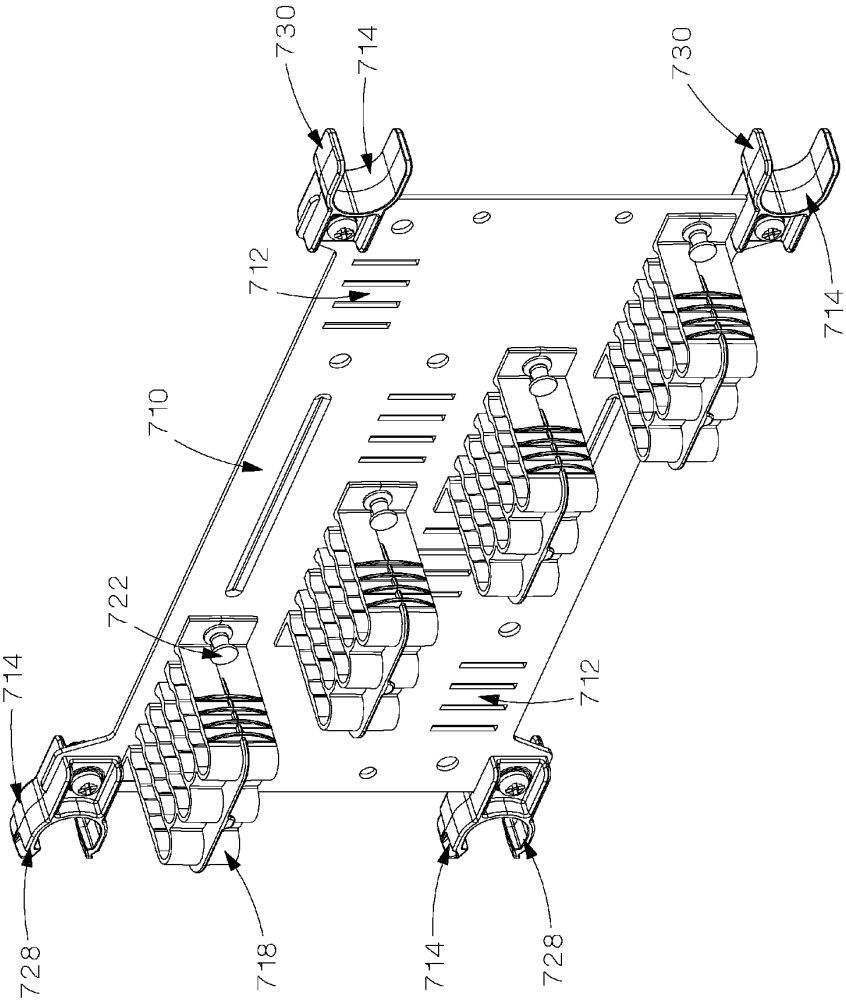

FIG.52

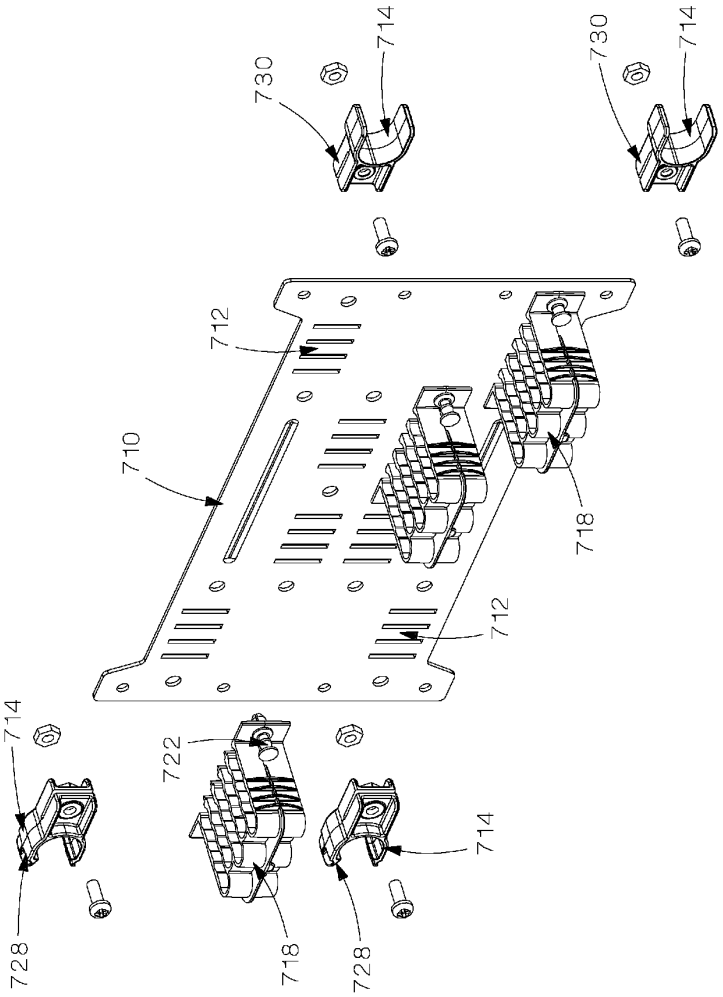

FIG.53

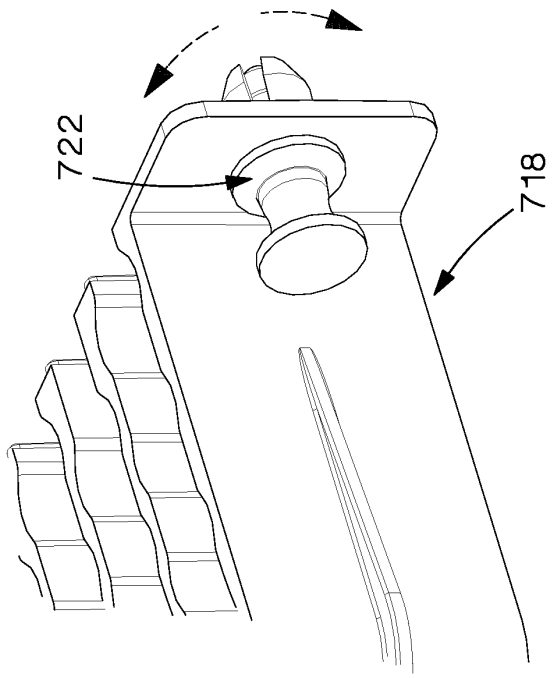

FIG.54B

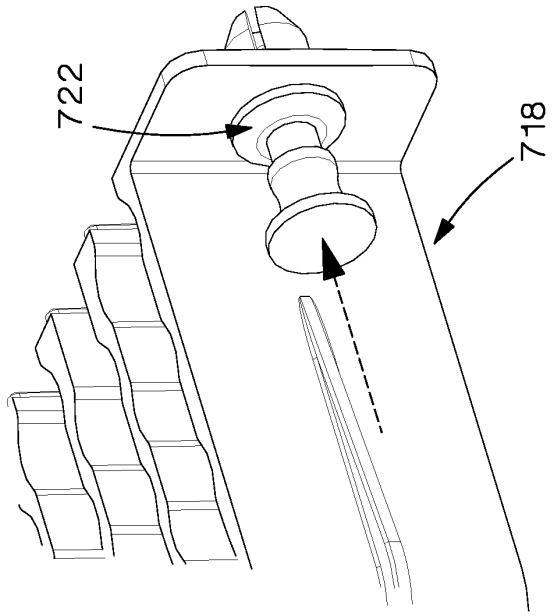

FIG.54A

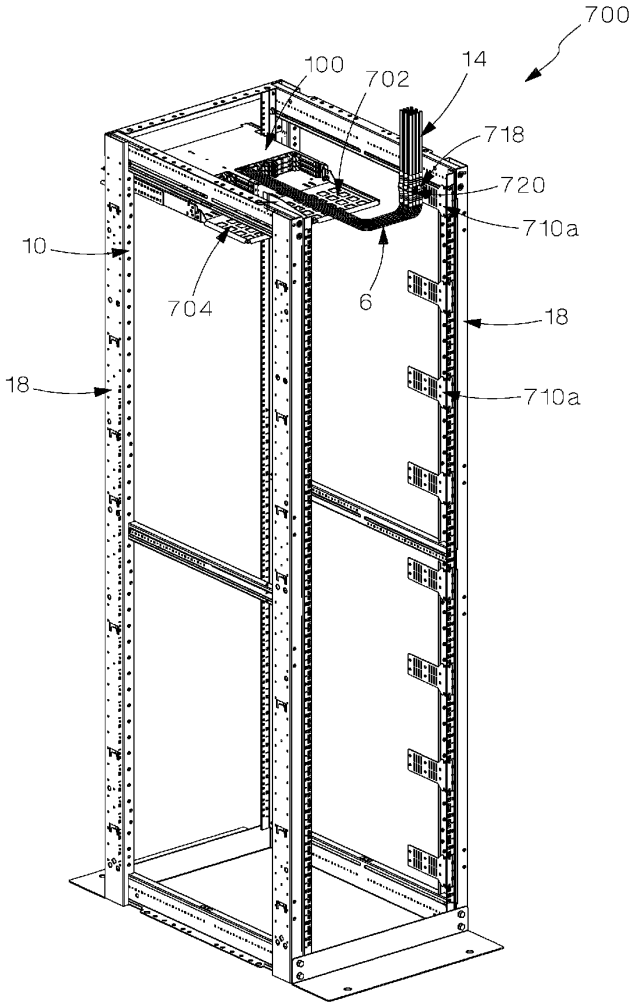

FIG.55

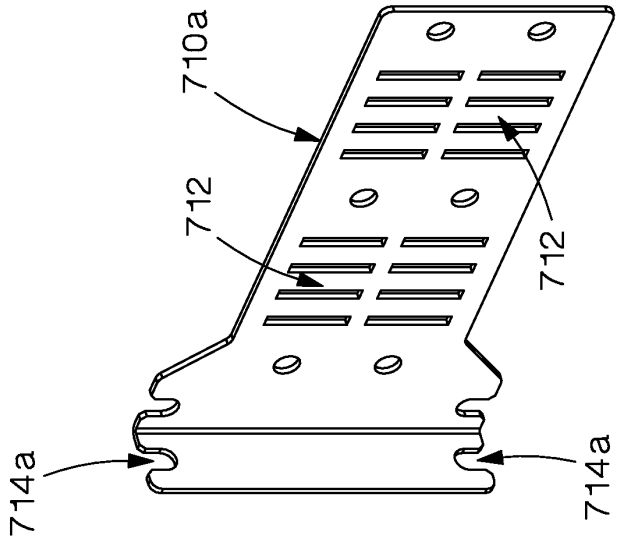

FIG.56B

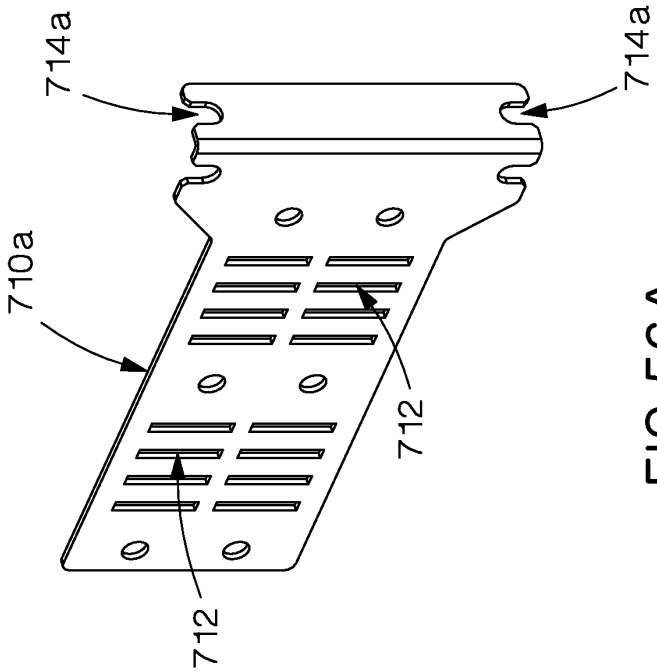

FIG.56A

HIGH DENSITY FIBER ENCLOSURE AND METHOD

CROSS-REFERENCE TO RELATED APPLICATIONS

This application claims the benefit of U.S. Provisional Application Ser. No. 62/049,442, filed Sep. 12, 2014, the subject matter of which is incorporated by reference in its entirety.

BACKGROUND OF THE INVENTION

This invention relates to data center management, and in particular high speed data transport fiber cabling systems. Optical fibers allow for transmission of communications over longer distances and at higher bandwidths than wire cables. Optical fibers are also advantageous for communication systems because signals suffer less loss than wire cables and are immune to electromagnetic interference. Optical fibers are therefore often used for high bandwidth, long distance applications. One of the primary functions of a data center is to provide connections between incoming and outgoing optical fiber connections.

As demand for high bandwidth increases, it is advantageous to use smaller and/or higher capacity adapters to minimize the amount of data center rack space needed per optical fiber port. Due to this, many users of data centers are transitioning to smaller Local Connector adapters ("LC adapters") or Multi-fiber Push-on/Pull-off adapters ("MPO adapters"). Thus, a rack or enclosure which maximizes the number of LC or MPO adapters may be advantageous. Additionally, it may be advantageous if a rack or enclosure allowed for replacing LC adapters with MPO adapters which provide multi-fiber capabilities.

From time to time, maintenance or replacement of the adapters in an optical fiber system becomes necessary. However, disturbing the connection between optical fibers may cause a disruption in service over the optical wire. Therefore, it may also be advantageous to use a rack or enclosure system which disturbs a minimal number of optical fiber connections during maintenance on other adapters.

SUMMARY OF THE INVENTION

The present invention provides an enclosure to maximize the number of connections available per rack space as well as provide for easy, non-disruptive maintenance or replacement of installed optical fiber cables.

BRIEF DESCRIPTION OF THE DRAWINGS

FIG. **1** is an isometric view of the chassis with the front access door closed in accordance with an embodiment of the present invention.

FIG. **2** is an isometric view of the chassis with the front access door open in accordance with an embodiment of the present invention.

FIG. **3** is an isometric view of the chassis with the front door open and chassis cover removed in accordance with an embodiment of the present invention.

FIG. **4** is an isometric view of the chassis with the front door open and cassette trays located in the cord move or change position and cassette replacement or addition position.

FIG. **5** is an isometric view of the chassis of FIG. **4** with one cassette partially removed from the front of the chassis.

FIG. **6** is a close-up view of the front portion of the cassette tray rails as indicated in FIG. **5**.

FIG. **7** is an isometric view of the chassis with a unification clip installed.

FIG. **8** is a close-up view of an installed unification clip and cassette tray rails as indicated in FIG. **7**.

FIG. **9** is a close-up view of an installed unification clip of FIG. **8** with the unification clip partially installed.

FIG. **10** is a close-up view of an installed unification clip of FIG. **8** with the unification clip removed.

FIG. **11** is an isometric view of the unification clip from the front in accordance with an embodiment of the present invention.

FIG. **12** is an isometric view of the unification clip from behind in accordance with an embodiment of the present invention.

FIG. **13** is a perspective view of a tray guide and cassette tray rails, in which the top cassette tray rail is in the home position, the middle cassette tray rail is in the cord move or change position, and the bottom rail is in the cassette replacement or addition position.

FIG. **14** is a broken perspective view of the tray guide and cassette tray rails of FIG. **13**.

FIG. **15** is a perspective view of the spring protrusion and tray guide detent.

FIG. **16** is an isometric view of the chassis with the front access door open and the cassette trays removed.

FIG. **17** is a partially exploded isometric view of the chassis of FIG. **16**.

FIG. **18** is an isometric view of a rack mounting bracket.

FIG. **19** is an isometric view of a rack mounting bracket.

FIG. **20** is an isometric view of a slack management plate.

FIGS. **21**A and **21**B are isometric views of a slack management plate divider.

FIG. **22** is a partially exploded isometric view of the chassis of FIG. **16**.

FIG. **23** is a partially exploded isometric view of the chassis of FIG. **16** with the center tray guide removed.

FIG. **24** is a partially exploded isometric view of the chassis of FIG. **16** with the chassis cover removed.

FIGS. **25**A and **25**B are isometric views of a right tray guide.

FIGS. **26**A and **26**B are isometric views of a center tray guide.

FIGS. **27**A and **27**B are isometric views of a left tray guide.

FIG. **28** is an isometric view of a cassette tray.

FIG. **29** is an isometric view of the cassette tray of FIG. **28** with one cassette in the process of being removed from the cassette tray.

FIG. **30** is an isometric view of the cassette tray of FIG. **28** with one cassette further in the process of being removed from the cassette tray.

FIG. **31** is an isometric view of the cassette tray of FIG. **28** with one cassette further in the process of being removed from the cassette tray.

FIG. **32** is an isometric view of a cassette tray with the cassettes removed.

FIG. **33** is an exploded isometric view of the cassette tray of FIG. **32**.

FIG. **34**A is an isometric views of the spring protrusion and portion of the cassette tray rail.

FIG. **34**B is a partially exploded isometric view of the spring protrusion and cassette tray rail of FIG. **34**A.

FIG. **35**A is an isometric view of the cassette flex beam and portion of the cassette tray rail.

FIG. **35**B is a partially exploded isometric view of the cassette flex beam and cassette tray rail of FIG. **35**A.

FIG. **36**A is an isometric view of an LC-MPO cassette in an upright first position.

FIG. **36**B is an isometric view of an LC-MPO cassette in an upside down second position.

FIG. **37** is a partially exploded isometric view of an LC adapter cassette.

FIG. **38** is an isometric view of an MPO fiber adapter panel.

FIG. **39** is an isometric view of the MPO fiber adapter panel of FIG. **38** and advancing trunk cable furcation leg to be installed into the MPO fiber adapter panel.

FIG. **40** is an isometric view of the MPO fiber adapter panel of FIG. **38** with three trunk cable furcation legs fixed between the population feature pegs of the MPO fiber adapter panel.

FIG. **41** is a plan view of the MPO fiber adapter panel of FIG. **40**.

FIG. **42** is an isometric view of a chassis applying a unidirectional patch cord routing scheme in accordance with an embodiment of the present invention.

FIG. **43** is a plan view which illustrates a unidirectional patch cord routing scheme schematically.

FIG. **44** is an isometric view of a chassis applying a split patch cord routing scheme in accordance with another embodiment of the present invention.

FIG. **45** is a plan view which illustrates a split patch cord routing scheme schematically.

FIG. **46** is an isometric view of the trunk cable management system in accordance with an embodiment of the present invention.

FIG. **47** is an isometric view of the vertical cable manager.

FIG. **48** is a partial, partially exploded isometric view of the vertical cable manager of FIG. **47**.

FIG. **49** is a partial isometric view of the vertical cable manager of FIG. **47**.

FIG. **50** is an isometric view of a transition management panel with transition bundling clips.

FIG. **51** is plan view of the transition bundling clips.

FIG. **52** is an isometric view of a transition management panel with transition bundling clips installed.

FIG. **53** is a partially exploded isometric view of the transition management panel of FIG. **52**.

FIGS. **54**A and **54**B are close-up views of a portion of a transition bundling clip and a bundling clip fastener.

FIG. **55** is an isometric view of a second embodiment of the trunk cable management system.

FIGS. **56**A and **56**B are isometric views of the second embodiment of the transition management panel.

DETAILED DESCRIPTION OF THE INVENTION

The high density fiber enclosure system **2** consists of chassis **100**, cassette trays **200**, cassette **400**, removable unification clip **300**, and removable trunk cable management system **700**. The enclosure system **2** may be made up of several chassis **100** stacked upon each other.

FIG. **1** illustrates the outside of chassis **100** with the front access door **140** closed. FIG. **2** illustrates the chassis **100** with the front access door **140** open. FIG. **3** illustrates the chassis **100** with the chassis cover **134** removed. FIGS. **1**, **2**, and **3** also illustrate a slack management plate **702** which is mounted to the chassis **100**. As shown in FIGS. **2**, **3**, **4**, and **5** the chassis **100** may include multiple sliding cassette trays **200**. In the embodiment shown, there are two cassette trays **200** positioned adjacent to each other in the same row. Further, in the embodiment shown, there are three rows of cassette trays **200**. Each cassette tray **200** may hold up to two cassettes **400**, such that up to a total of six cassette trays **200** and twelve cassettes **400** may be installed in one chassis **100**. Other embodiments are contemplated that may include more or less cassette trays **200** in the same row, and more or less rows of cassette trays within the chassis.

As shown in FIGS. **4** and **5**, each cassette tray **200** includes multiple cassette tray rails **212**, which may slide in and out of chassis **100**. FIG. **6** illustrates an enhanced view of the front portion of two cassette tray rails **212**. FIGS. **7** and **8** illustrate a unification clip **300** connected to two cassette tray rails **212**. A unification clip **300** may be used to join two cassette trays **200** together. Unification clip **300** is preferably a three-dimensional C-shaped structure, although unification clip **300** may also be D- or O-shaped, or of any other shape which allows unification clip **300** to join two cassette trays **200** together. As shown in FIGS. **8**, **9**, **10**, **11** and **12**, the unification clip **300** has two mounting posts **302**, a cable management area **304**, a top opening **306**, and alignment posts **308**. Mounting posts **302** are configured to engage with unification clip slots **252** located on the outer cassette tray rail **240** or **242**. The mounting posts **302** are located on the rear portion of both sides of unification clip **300**. Cable management area **304** is defined by the lumen of the unification clip **300**—i.e. the empty space disposed within the unification clip **300**. Alignment posts **308** are located on the forward-most portion of the unification clip **300**. Alignment posts **308** engage with the front most portion of the cassette tray rails **212** such that the cable management area **304** of the unification clip **300** aligns with the front loops **246** of the cassette tray rails **240** or **242**. Top opening **306** is disposed at the rear top portion of the unification clip **300** and is large enough to allow a patch cable **4** to pass through. Thus, patch cables **4** may be managed by routing them through cable management area **304** of unification clip **300**. Because the cable management area **304** is aligned with the front loop **246** of the cassette tray rails **212** when the unification clip **300** is installed, the front loops **246** and cable management areas **304** work together to route patch cables **4**. As shown in FIG. **8**, when the unification clip **300** is installed the mounting posts **302** of the unification clip **300** each engage unification clip slots **252** on different cassette tray rails **212**. Similarly, alignment posts **308** of the unification clip **300** each engage with different cassette tray rails **212**, although they engage with the same two cassette tray rails **212** as the mounting posts **302**. In an embodiment, unification clip **300** may be removed from the cassette tray rails **212** by disengaging the alignment posts **308** as shown in FIG. **9**. The mounting posts **302** may also be disengaged as shown in FIG. **10**. FIG. **11** illustrates an isometric view of the unification clip **300** from the front and FIG. **12** is an isometric view of the unification clip **300** from the back.

FIGS. **13** and **14** illustrate the cassette tray rails **212** in three different positions within a tray guide **104**. Cassette tray rails **212** may be disposed in the same three positions in tray guides **102** and **106**. Tray guides **102**, **104** and **106** include front, center, and rear detents **120**, **122**, and **124** which serve to position the cassette trays **200** in three separate positions—the home position, cord move or change position, and cassette replacement or addition position. Tray guides **102**, **104**, and **106** also each include three tray guide channels **114**. FIG. **15** illustrates the interaction of the spring protrusion **230** of the cassette tray rail **212** and the detents

120, 122 and 124 of the tray guides 102, 104, and 106. Spring protrusion 230 comprises a flat piece of flexible material with a protuberance 256 in its center. The spring protrusion 230 is preferably comprised of a flexible metal such as steel. The protuberance 256 of spring protrusion 230 is of a shorter length than detents 120, 122, and 124 in the direction of the cassette tray rail 240 or 242 and is preferably shaped to engage with detents 120, 122, and 124. As shown in FIG. 15, spring protrusion 230 flexes in the opposite direction of the protuberance 256 such that, when enough force is applied to slide the cassette tray 200 and the cassette 400 in the forward or rearward direction, the protuberance 256 escapes from detents 120, 122, and 124 and allows the cassette tray rails 240 or 242 to move freely along tray guides 102, 104, or 106 within tray guide channels 114. When the protuberance 256 encounters another detent 120, 122, or 124, the protuberance 256 engages with the detent 120, 122, or 124 and fixes the cassette tray 200 and the cassette 400 in position until enough force is applied to slide the cassette tray 200 and the cassette 400 to another position.

As further shown in FIGS. 16 and 17, the chassis 100 also includes forward limiting flanges 116, rear limiting brackets 118, a center forward limiting bracket 136, a center rear limiting bracket 138, and rack mounting brackets 126. Forward limiting flanges 116 are protrusions on the left and right portions of the chassis 100 disposed proximate to the forward-most edge of the left tray guide 102 and right tray guide 104. The protrusions of the forward limiting flanges 116 are bent 90 degrees toward the interior of the chassis 100 to engage with the cassette trays 200 in the cassette replacement or addition position. Rear limiting brackets 118 are brackets disposed or attached proximate to the rearward-most edge of the left tray guide 102, right tray guide 104, and center tray guide 106. The rear limiting brackets engage with the cassette trays 200 in the home position. The center rear limiting brackets 138 attached to the center tray guide 106 are shaped to engage with both of the cassette trays 200 located in the same row of the chassis 100 in the home position. The center forward limiting bracket 136 is also attached to the center tray guide 106 and is shaped to engage with both of the cassette trays 200 located in the same row of the chassis 100 in the cassette replacement or addition position. Once the cassette trays 200 are installed within tray guides 102, 104, and 106 and the rear limiting brackets 118, center forward limiting bracket 136, and center rear limiting bracket 138 are installed on the chassis 100, cassette trays 200 are maintained within the chassis 100 and cannot be removed without first removing the center forward limiting bracket 136 or the rear limiting brackets 118 and center rear limiting bracket 138.

FIGS. 16 and 17 illustrate the chassis 100 with the cassette trays 200 and the cassettes 400 removed. As shown in FIG. 17, rack mounting brackets 126 provide the connection between the chassis 100 and the high density fiber enclosure system 2. As shown in FIGS. 18 and 19, the rack mounting brackets 126 may contain two rows of countersink thru holes 128 which allow the rack mounting bracket 126 to be adjustably mounted to the chassis 100. A variety of mounting location options are provided by the two rows of countersink thru holes 128, allowing the installer to align the front portion of the chassis 100 with the front portion of the high density fiber enclosure system 2. The rack mounting brackets 126 also include slotted and cut openings 132 on the top and bottom of the forward-most portion of the rack mounting brackets 126. Notably, the forward-most portion of the rack mounting brackets 126 may be bent 90 degrees such that the slotted and cut openings 132 face the front of the chassis 100 when installed. The slotted and cut openings 132 allow the chassis 100 to be pre-installed by allowing the installer to rest the chassis 100 on two pre-installed screws located on the high density fiber enclosure system 2. The pre-installed screws may then be tightened to install the chassis 100 in the high density fiber enclosure system 2.

FIG. 20 illustrates an embodiment of the slack management plate 702 which includes cutouts 704. Slack management plate 702 may also optionally include a divider 726 as shown in FIGS. 1-5. Divider 726 may be formed of a removable or permanent wall or other structure disposed perpendicular to the plane of slack management plate 702 which allows a user to organize trunk cable furcation legs 6. One embodiment of divider 726 is shown in FIGS. 21A and 21B.

FIG. 22 illustrates the center tray guide 106 removed from the chassis 100. Left tray guides 102 and right tray guides 104 are attached to the chassis 100 as shown in FIGS. 22, 23, and 24. In particular, a left tray guide 102 is attached to the left side wall 108 of the chassis 100, a right tray guide 104 is attached to the right side wall 110 of the chassis 100. A center tray guide 106 is attached to chassis 100. Alternatively, a center tray guide 106 may be integrally formed such that it comprises both a left tray guide 102 and right tray guide 104. Left tray guides 102 and right tray guides 104 are mirror images of one another. Each of the tray guides 102, 104 and 106 have three tray guide channels 114 which serve to support the cassette trays 200 as they slide in and out of the chassis 100.

FIGS. 22-24 further illustrate rear limiting brackets 118 and center rear limiting brackets 138. Rear limiting brackets 118 are brackets disposed or attached proximate to the rearward-most edge of the left tray guide 102, right tray guide 104, and center tray guide 106. The rear limiting brackets engage with the cassette trays 200 in the home position. The center rear limiting brackets 138 attached to the center tray guide 106 are shaped to engage with both of the cassette trays 200 located in the same row of the chassis 100 in the home position. Once the cassette trays 200 are installed within tray guides 102, 104, and 106 and the limiting brackets 118 and 138 are installed on the chassis 100, cassette trays 200 are maintained within the chassis 100 and cannot be removed without first removing the rear limiting brackets 118 and 138.

FIGS. 25A and 25B illustrate a right tray guide 104. Right tray guide 104 comprises a plurality of tray guide channels 114 running lengthwise down one side of the tray guide 104 and approximately parallel to one another. In one embodiment three tray guide channels 114 comprise a right tray guide 104. Additionally, each tray guide channel 114 includes a front detent 120, a center detent 122, and a rear detent 124 as shown in FIG. 25A.

FIGS. 26A and 26B illustrate a center tray guide 106. Center tray guide 106 comprises a plurality of tray guide channels 114 running lengthwise down both sides of the tray guide 106 and approximately parallel to one another. In one embodiment three tray guide channels 114 disposed on each side of the center tray guide 106 comprise a center tray guide 106. Additionally, each tray guide channel 114 includes a front detent 120, a center detent 122, and a rear detent 124 as shown in FIG. 26A.

FIGS. 27A and 27B illustrate a left tray guide 102. Left tray guide 102 comprises a plurality of tray guide channels 114 running lengthwise down one side of the tray guide 102 and approximately parallel to one another. In one embodiment three tray guide channels 114 comprise a left tray guide 106. Additionally, each tray guide channel 114 includes a

front detent **120**, a center detent **122**, and a rear detent **124** as shown in FIG. **25**A. In an embodiment, left tray guides **102** and right tray guides **104** are mirror images of one another.

As shown in FIGS. **28**, **29**, **30**, **31**, **32** and **33**, each cassette tray **200** consists of a tray base **210**, cassette tray rails **212**, and cassette flex beam **214**. The tray base **210** is preferably comprised of a sheet metal base. The tray base **210** includes a front recessed area **216** which provides maximum allowable reach for an installer or user to access patch cords **4** (not shown). The tray base **210** also has a right cassette bay **218** and a left cassette bay **220**. Each cassette bay **218** and **220** includes a cassette opening **222** which allows an installer to access installed patch cords **4** from the bottom and top of the cassette tray **200**. Finally, left and right cassette tray rails **240** and **242** are disposed upon the cassette tray **200** within each cassette bay **218** and **220** such that each cassette bay **218** and **220** includes a left cassette tray rail **240** disposed on the left side of the cassette bay **220**, and a right cassette tray rail **242** disposed on the right side of the cassette bay **218**. Alternatively, if a center cassette tray rail **276** is used, a right cassette bay **218** may have a cassette tray rail **242** disposed on the right side of right cassette bay **218** and a center cassette tray rail **276** disposed on the left side of right cassette bay **218**, and a left cassette bay **220** may have a left cassette tray rail **240** disposed on the left side of left cassette bay **220** and a center cassette tray rail **276** disposed on the right side of left cassette bay **220**. As further discussed herein with reference to the use of the high density fiber enclosure system **2**, FIGS. **29**-**31** show the cassette tray **200** in different stages of removal of a cassette **400** from the front of the chassis **100**.

As shown in FIGS. **32** and **33**, the front patch cord management loop **244** is disposed at the forward-most portion of the cassette tray rail **212**. The front patch cord management loop **244** provides an organization structure for patch cords **4** consisting of a front loop **246** and an opening **248** to route patch cords **4** through. The opening **248** allows the patch cords **4** to travel from right to left or left to right through the front loop **246**. The front loop **246** has a slot **250** on its topmost portion which is wide enough to allow patch cords **4** to pass through. Therefore, patch cords **4** may enter and leave the front loop **246** via the slot **250** without either end of the patch cord **4** being disconnected. A unification clip slot **252** is located just behind the front patch cord management loop **244** on the cassette tray rail **240** or **242**. Unification clip slot **252** is located on the outside of the cassette tray rail **240** or **242**. Center cassette tray rails **276** do not include unification clip slots **252**. Disposed further rearward on the cassette tray rail **212** is the front post stop area **234**. The front post stop area **234** interacts with the cassette front post **410** to properly seat the cassette **400** into the cassette tray rail **212**. Disposed proximate and to the rear of the front post stop area **234** is the post stops discontinuity **236**. The post stops discontinuity **236** is a smooth portion of the cassette tray rail **212** which ensures the front post **410** and rear post **412** of the cassette **400** do not engage with the cassette tray rail **212** within the post stops discontinuity **236**. Disposed proximate and to the rear of the post stops discontinuity **236** is the rear post stop **238**. The rear post stop **238** is a notch designed to interact with the rear post **412** of the cassette **400** such that the rear post stop **238** captures the rear post **412** on three sides and blocks the cassette **400** from moving upwards or rearwards.

As further shown in FIGS. **32** and **33**, a cassette centering feature **258** is also integrated into the cassette tray rails **212**. The cassette centering feature **258** is a triangular-shaped protuberance located on the bottom portion of the cassette tray rail **212** just proximate to and rear of the front post stop area **234**. The cassette centering feature **258** is designed such that, when a cassette **400** is loaded from the rear of the chassis **100**, an outer shuttered LC adapter **504** or MPO patch cord adapter **604** makes contact with the cassette centering feature **258** and, due to the continued forward movement of the cassette **400**, urges the cassette **400** into proper alignment with the cassette tray rails **240** or **242** such that the front posts **410** engage with the front post stop areas **234** and the rear posts **412** engage with the rear post stops **238** essentially simultaneously.

FIG. **33** illustrates a left cassette tray rail **240**, right cassette tray rail **242**, and center cassette tray rail **276**. The cassette tray rails **212** each consist of a support rib **228**, spring protrusion **230**, front post stop area **234**, post stops discontinuity **236**, and rear post stop **238**. Left cassette tray rails **240** and right cassette tray rails **242** may be mirror images of one another. In an embodiment, a center cassette tray rail **276** consists of a spring protrusion **230**, front post stop area **234**, post stops discontinuity **236**, and rear post stop **238** on both sides of center cassette tray rail **276**. In an alternative embodiment, a center cassette tray rail **276** comprises a left cassette tray rail **240** and right cassette tray rail **242** disposed back-to-back. Center cassette tray rails **276** do not include support ribs **228**. Left cassette tray rails **240** travel within a left tray guide **102** and right cassette tray rails **242** travel within a right tray guide **104**. The support rib **228** of the cassette tray rail **212** travels along the top portion of a tray guide **102**, **104**, or **106** to support the cassette tray rail **240** or **242** and cassette tray **200**. The support rib **228** of the cassette tray rail **240** or **242** extends along the bottom portion of the cassette tray rail **240** or **242** from the rear of the cassette tray rail **240** to **242** to a front patch cord management loop **244**.

As shown in FIGS. **13** and **14**, additional features of the cassette tray rail **212** are designed to facilitate the movement of the cassette tray **200** and cassette **400** in and out of the high density fiber enclosure **2** in three different positions. The stopping block **232** interacts with the forward limiting flange **116** to limit forward movement of the cassette **400** at the cassette replacement or addition position. The cassette replacement or addition position is the forward-most disposition of the cassette tray **200** and cassette **400** and allows a user to replace or add cassettes to the chassis **100**. The stopping block **232** (as shown in FIGS. **34**A and **34**B) is disposed near the rear of the cassette tray rail **212** such that the forward motion of the cassette **400** is halted at the cassette replacement or addition position.

As shown in FIGS. **34**A and **34**B, a spring protrusion **230** is disposed on the most rearward portion of the cassette tray rails **240** and **242**. Center cassette tray rails **276** do not include spring protrusions **230**. The spring protrusion **230** interferes with the detents **120**, **122**, and **124** in order to position the cassette **400** and cassette tray **200** in the home, cord move or change, and cassette replacement or addition positions. In particular, the spring protrusion **230** is disposed within the front detent **120** at the cassette replacement or addition position. The spring protrusion **230** is disposed within the center detent **122** in the cord move or change position. Finally, the spring protrusion **230** is disposed within the rear detent **124** in the home position. Spring protrusion **230** comprises a flat piece of flexible material with a protuberance **256** in its center. The spring protrusion **230** is preferably comprised of a flexible metal such as steel. The protuberance **256** of spring protrusion **230** is of a shorter length than detents **120**, **122**, and **124** in the direction of the

cassette tray rail **240** or **242** and is preferably shaped to engage with detents **120**, **122**, and **124**. As shown in FIG. **15**, spring protrusion **230** flexes in the opposite direction of the protuberance **256** such that, when enough force is applied to slide the cassette tray **200** and cassette **400** in the forward or rearward direction, the protuberance **256** escapes from detents **120**, **122**, and **124** and allows the cassette tray rails **240** or **242** to move freely along tray guides **102**, **104**, or **106**. When the protuberance **256** encounters another detent **120**, **122**, or **124**, the protuberance **256** engages with the detent **120**, **122**, or **124** and fixes the cassette tray **200** and cassette **400** in position until enough force is applied to slide the cassette tray **200** and cassette **400** to another position.

As shown in FIGS. **35**A and **35**B, cassette flex beam **214** is formed of a beam shaped to engage with the cassette **400** such that the cassette **400** is securely installed in the cassette tray **200** and no unwanted motion of the cassette **200** within the cassette tray **400** occurs. Left cassette flex beams **260** are disposed on left cassette tray rails **240**; right cassette flex beams **262** are disposed on right cassette tray rails **242**. Left cassette flex beams **260** are mirror images of right cassette flex beams **262**. Cassette flex beam **214** has a beam portion **264**, catch wall **266**, front lead-in **268**, and mounting hole **270**. The beam portion **264** of cassette flex beam **214** is disposed between the catch wall **266** and mounting hole **270** and is generally horizontal. The catch wall **266** of cassette flex beam **214** is disposed on the rear-most portion of the beam portion **264** and is generally vertical. The catch wall **266** includes a divot **272** which is shaped to engage with front post **410** of the cassette **400** such that catch wall **266** prohibits the cassette **400** from upward movement until sufficient upward force is applied to the cassette **400** to deflect the flex beam **214**. Catch wall **266** also applies rearward pressure on the front post **410** of the cassette **400** to minimize rattling or other unwanted movement while the cassette **400** is in an installed position. Front lead-in **268** is a portion of the catch wall **266** which protrudes rearwardly from the rest of catch wall **266**. Front lead-in **268** guides the front post **410** of the cassette **400** into the divot **272** during front cassette installation. Front lead-in **268** also forms the top portion of divot **272**. Mounting hole **270** is disposed on the front-most portion of the beam portion **264** of cassette flex beam **214**. Mounting hole **270** is configured to mount the flex beam **214** on the cassette tray rail **240** or **242** when the flex beam **214** is assembled with the cassette tray rail **212**. Cassette flex beam **214** may also be integrally formed with a cassette tray rail **212**. If cassette flex beam **214** is integrally formed with cassette tray rail **212**, mounting hole **270** is not necessary.

Two different types of cassettes **400** are disclosed for use with the high density fiber enclosure system **2**, an LC-MPO cassette **500** (FIGS. **36**A, **36**B and **37**) and an MPO fiber adapter panel ("herein after MPO FAP") **600** (FIGS. **38**, **39**, **40**, and **41**), although other types of cassettes **400** may also be used. Cassettes **400** used with the high density fiber enclosure system **2** may have a cassette body **406**, a cassette cover **408**, cassette front posts **410**, cassette rear posts **412**, cassette rear post release latches **414**, and cassette rear release latch stops **416**. Cassette body **406** is of generally rectangular shape, and has a base **418**, right side **420**, and left side **422**. Right and left sides **420** and **422** have a right wall **424** and left wall **426**, respectively, and are attached at a generally 90 degree angle to base **418** at the right and left sides **420** and **422** of base **418**. A cassette cover **408** is provided which extends parallel to the base **418** of the cassette body **406** from the right wall **424** to the left wall **426**. Cassette cover **408** is provided to protect the components of cassette **400**. Cassette **400** may also include top side indicator **428** and bottom side indicator **430**. Top side indicator **428** is disposed on the outside portion of cassette cover **408** and indicates that, when visible as viewed from above an installed cassette **400**, the cassette **400** is disposed in an upright first position (see FIG. **36**A). Bottom side indicator **430** is disposed on the outside portion of cassette body **406** and indicates that, when visible as viewed from above an installed cassette **400**, the cassette **400** is disposed in an upside down second position (see FIG. **36**B). Top side indicator **428** and bottom side indicator **430** may be comprised of raised embossing, a plate or label attached to the cassette **400**, a painted area, or any other form of marking. Top side indicator **428** and bottom side indicator **430** may be a word, number, phrase, symbol, or combination thereof sufficient to inform the user whether the cassette **400** is in the upright first position or upside down second position. Alternatively, a recess **436** may be provided on the top and bottom sides of cassette **400** to allow a user a location to affix his or her own label to both sides of cassette **400**. Recess **436** may be of any shape, but is preferably of a rectangular shape.

As described above, cassette front posts **410** are designed to interact with the cassette tray rail front post stop areas **234** such that at the installed position, the cassette front posts **410** rest inside the cassette tray rail front post stop areas **234** and are blocked from forward movement by a catch wall **266** of cassette flex beam **214** located in the cassette tray rail front post stop area **234**. Cassette rear posts **412** are designed to interact with the cassette tray rail rear post stops **238** in the cassette installed position. At the cassette installed position the cassette rear posts **412** are maintained inside the cassette tray rail rear post stops **238** blocking rearward and upward movement of the cassette **400**.

Shown in FIGS. **36**A, **36**B, **37**, **38**, **39**, **40**, and **41**, cassette rear post release latches **414** are designed to disengage the cassette rear posts **412** from the cassette tray rail rear post stops **238** when a user desires to uninstall a cassette **400**. Cassette rear post release latches **414** are preferably comprised of a protrusion **432** from the rear of cassette rear post **412** and an opening **434** between the body of the cassette **400** and the rear post **412**. Cassette rear post release latches **414** are comprised of a resilient material which allows the rear post **412** to flex inwardly when pressure is placed on cassette rear post release latches **414**. When a user desires to uninstall a cassette **400**, the user places inwardly directed pressure on cassette rear post release latch **414**. The cassette rear post **412** then travels inwardly and disengages with the cassette tray rail rear post stop **238**. Cassette **400** may then be removed from the cassette tray **200**. Cassette rear post release latch stop **416** is disposed on the body of the cassette **400** in a position to engage with the cassette rear post release latch **414** when inwardly directed pressure is placed on cassette rear post release latches **414**. The cassette rear post release latch stop **416** is positioned to allow the cassette rear post **412** to travel a sufficient distance in the inward direction to disengage from the cassette tray rail rear post stop **238** while blocking the cassette rear post **412** from over traveling in the inward direction. Blocking over travel of cassette rear post **412** in the inward direction may minimize unnecessary material fatigue and/or the failure of cassette rear post release latch **414**, prolonging the useable life of cassette **400**. Cassette rear post release latch stop **416** may be comprised of a post or other protrusion extending from the body of the cassette **400**. Alternatively, cassette rear post release latch stop **416** may be part of the body of the cassette **400**.

As noted above, at least two different types of cassettes **400** may be used in the high density fiber enclosure system

2—LC-MPO cassettes **500** (FIGS. **36**A, **36**B and **37**) and MPO FAP **600** (FIGS. **38**, **39**, **40**, and **41**). In addition to the cassette features described above, LC-MPO cassettes **500** also include a front LC mounting face **502**, shuttered LC adapters **504**, rear MPO mounting window **506**, and an MPO trunk adapter **508**. The front LC mounting face **502** is located on the front portion of LC-MPO cassette **500** and provides a location for mounting shuttered LC adapters **504**. Shuttered LC adapters **504** are standard adapters known and used in the art for connecting patch cords **4** within data management centers, for example, shuttered LC adapters. Alternatively, for example, shuttered LC adaptors or non-shuttered LC adaptors may be used. Front LC mounting face **502** provides space for up to 6 shuttered LC adapters **504**. MPO trunk adapter **508** is located at the rear of cassette body **406** and connects to trunk cable furcation legs **6** which each include a dust cap **16**. Dust caps **16** are removed from trunk cable furcation legs **6** prior to installation of trunk cable furcation legs **6** in MPO trunk adapters **508**. MPO trunk adapters **508** are standard adapters known in the art, for example Panduit's SC style simplex form adapter. Rear MPO mounting windows **506** are located on the rear portion of cassette body **406** and each provide a location on the cassette body **406** for mounting MPO trunk adapters **508** to the cassette body **406**. In one embodiment, four MPO mounting windows **506** are located on the cassette body **406** which allows up to four MPO trunk adapters **508** to be mounted on cassette body **406**.

As an alternative to LC-MPO cassettes **500** (or other types of cassettes **400**), MPO FAP **600** may be used as shown in FIGS. **38**, **39**, **40**, and **41**. In addition to the cassette features described above, MPO FAP **600** also include a front MPO mounting face **602**, MPO patch cord adapters **604**, bottom window **608**, and population feature **610**. Front MPO mounting face **602** is located on the front portion of cassette body **406** and provides a location for mounting up to six MPO patch cord adapters **604**. MPO patch cord adapters **604** are configured to connect patch cords **4** with the cassette **600**. Up to six MPO patch cord adapters **604** provide a location for connecting up to six trunk cable furcation legs **6** which each have a dust cap **16**. Dust cap **16** is removed from trunk cable furcation legs **6** prior to installing trunk cable furcation legs **6** into MPO patch cord adapters **604**. Bottom windows **608** are disposed on the cassette body base **418** just behind the front MPO mounting face **602**. Bottom windows **608** allow a user to access the MPO trunk cable furcation legs **6** from the top and bottom to allow a user to connect or disconnect trunk cable furcation legs **6** to and from MPO trunk adapters **604**.

As shown in FIGS. **38**-**41**, population feature **610** provides a trunk cable furcation legs **6** capture and routing system for installing, adding, or changing trunk cable furcation legs **6** attached to MPO trunk adapters **604** in an MPO FAP **600**. Population feature **610** is comprised of a plurality of rows of offset pegs **612** disposed on the base **418** of the MPO FAP **600**. Pegs **612** may be of any shape, including cylindrical, triangular, rectangular, etc. Preferably, three to four pegs **612** are provided in each row. When installing a trunk cord **6**, the user routes the trunk cable furcation legs **6** through the rows of pegs **612**. The offset nature of the rows of pegs **612** loosely holds the trunk cable furcation legs **6** in position while cassette **600** is translated via the movement of the cassette tray **200** to the cassette remove or addition position. Once cassette tray **200** is in the cassette remove or addition position, the MPO connector **8** is disengaged from the pegs **612** and trunk cable furcation legs **6** are extended to reach the MPO trunk adapters **604**, at which point the MPO connector dust cap **16** may be removed. Then the trunk cable MPO Connectors **8** are connected to MPO trunk adapters **604**; the trunk cable furcation legs **6** may remain routed through the rows of pegs **612**.

FIGS. **42**, **43**, **44**, and **45** illustrate multiple embodiments of cable management within the cassette trays **200**. FIG. **42** illustrates a unidirectional cable management scheme in which the patch cables **4** are routed through the front patch cord management loops **244** in one direction. As shown in FIGS. **42** and **43**, a unification clip **300** is typically installed when using a unidirectional scheme. FIG. **43** illustrates an overhead view of cable flow as shown in FIG. **42**. FIG. **44** illustrates a split routing cable management scheme in which the patch cables **4** are routed through the front patch cord management loops **244** in two separate directions. Specifically, as shown in FIG. **44**, the patch cables **4** exiting a cassette tray **200** installed on the left side of a chassis **100** are routed to the left of the chassis **100**, and patch cables **4** exiting a cassette tray **200** installed on the right side of a chassis **100** are routed to the right side of the chassis **100**. FIG. **45** illustrates an overhead view of cable flow shown in FIG. **44**.

As illustrated in FIG. **46**, the high density fiber enclosure system **2** may also include a trunk cable management system **700**. The trunk cable management system **700** includes a slack management plate **702** and a vertical cable manager **708**.

As illustrated in FIG. **46** (as well as FIGS. **1**-**5**), the slack management plate **702** is mounted to a chassis **100** by attaching the front most portion of the slack management plate **702** to the rear most portion of the left and right side walls of the chassis **108** and **110** using spring loaded fasteners **706** and support pin **724** (shown in FIG. **20**). The support pin **724** is connected to the slack management plate **702** such that the slack management plate **702** may be rotated about the support pin **724**. The spring loaded fasteners **706** secure the slack management plate **702** to the left and right side walls of the chassis **108** and **110**. The slack management plate **702** provides a relatively level surface upon which the portion of trunk cable furcation legs **6** which exit the chassis **100** may rest to reduce the strain upon the trunk cable furcation legs **6**. In addition, the slack management plate **702** allows for management of trunk cable furcation legs **6** slack which is adequate to allow full extension of cassette trays **200** to further reduce the strain upon the trunk cable furcation legs **6**. The slack management plate **702** preferably includes cutouts **704** which allow the pins, fasteners, separators, cable ties, and/or other features for removably and securely organizing the trunk cable furcation legs **6** as they rest upon the slack management plate **702**. Cutouts **704** may be of any shape, but as shown in FIGS. **1**-**5** they are preferably of a square or rectangular shape. Preferably the trunk cable furcation legs **6** installed on one cassette **400** may be disposed on one side of divider **726** and the trunk cable furcation legs **6** installed in the other cassette **400** may be disposed on the other side of divider **726**. A slack management plate **702** is preferably mounted to each chassis **100**.

As shown in FIGS. **46**, **47** and **48**, the vertical cable manager **708** is mounted to the side of the high density fiber enclosure system **2** and provides structure for organizing and reducing the strain upon the trunk cables **14** and trunk cable furcation legs **6**. The vertical cable manager **708** consists of transition management panels **710** with attachment points **712** and panel attachment clips **714**, cable management fingers **716**, and transition bundling clips **718** with transition indentations **720** and bundling clip fasteners **722**. As shown

in FIG. **49**, transition management panels **710** are mounted on the trunk cable management system **700** such that they are generally perpendicular and offset to the slack management plates **702**. The transition management panels **710** include attachment points for transition bundling clips **712**. As shown in FIG. **52**, attachment points for transition bundling clips **712** are slots configured within the transition management panels **710** such that transition bundling clips **718** securely engage transition management panels **710**, or allow pins, fasteners, separators, cable ties, and/or other features for removably and securely organizing the trunk cables **14** or trunk cable transitions **20**. A plurality of attachment points **712** are preferably disposed on each transition management panel **710**, and attachment points **712** are preferably arranged in a number of rows of multiple attachment points **712** such that transition bundling clips **718** may be attached in a staggered fashion to transition management panel **710**. Panel attachment clips **714** are generally located at each corner of generally rectangular shaped transition management panels **710** and are configured such that the transition management panels **710** are securely affixed to cable management fingers **716**.

As shown in FIGS. **47**, **48**, and **49**, cable management fingers **716** protrude from the vertical cable manager **708** toward the front and rear of chassis **100**. The cable management fingers **716** preferably include a perpendicular portion at the end of the fingers **716** furthest from chassis **100** to more securely confine cables. Transition management panels **710** are preferably mounted upon cable management fingers **716** such that each panel attachment clip **714** of each transition management panel **710** is disposed on a different cable management finger **716**. The transition management panels **710** can be secured to the cable management fingers **716** at any point along the length of the cable management fingers **716**, which allows a user to stagger the cable management panels **710** such that some transition management panels **710** are located closer to the vertical cable manager **708** than other transition management panels **710**. This allows a greater number of trunk cables **14** and trunk cable furcation legs **6** to be better managed in a smaller area with less strain to the trunk cables **14**.

As shown in FIGS. **47**, **48**, **49**, and **50** transition bundling clips **718** are mounted upon transition management panels **710** via attachment points **712**. As shown in FIG. **51**, transition bundling clips **718** include a transition indentation **720**. The transition indentation **720** is preferably disposed within trunk cable transition **20** between trunk cables **14** and trunk cable furcation legs **6** such that the trunk cable transition **20** is securely housed within transition indentation **720** and strain upon the transition is reduced or eliminated.

As shown in FIGS. **52** and **53**, panel attachment clips **714** are preferably one of two types of clips—snap fit panel attachment clips **728** or loose fit panel attachment clips **730**. Preferably two snap fit panel attachment clips **728** are located on one side of transition management panels **710** and two loose fit panel attachment clips **730** or snap fit panel attachment clips **728** are located on the other side of the transition management panel **710**. As shown in FIGS. **54**A and **54**B, bundling clip fasteners **722** engage the transition bundling clips **718** and transition management panels **710** to securely affix the transition bundling clips **718** to a transition management panel **710**.

In another embodiment for managing trunk cables **14**, trunk cable furcation legs **6**, trunk cable transition **20**, shown in FIG. **55**, transition management panels **710***a* may be mounted upon the rack equipment rails **18** of the high density fiber enclosure system **2**. As shown in FIGS. **56**A and **56**B, transition management panels **710***a* include attachment points **712** as well as slotted and cut openings **714***a* for securing the transition management panels **710***a* directly to the rack equipment rails **18**. Transition management panels **710***a* may be mounted upon the rack equipment rails **18** of the high density fiber enclosure system **2** such that the transition management panels **710***a* extend along the side of the high density fiber enclosure system **2** or along the rear portion of high density fiber enclosure system **2**. The user may secure the trunk cable transitions **20** between trunk cables **14** and trunk cable furcation legs **6** using transition bundling clips **718** which are mounted upon transition management panels **710***a* via attachment points **712** and secured with bundling clip fasteners **722**. Alternatively, the user may secure the trunk cable transitions **20** upon transition management panels **710***a* through attachment points **712** with fasteners known in the art, for example hook and loop tape.

Use of the above features of the high density fiber enclosure system **2** will now be described.

To connect a chassis **100** to a high density fiber enclosure system **2**, a user connects a rack mounting bracket **126**, for example as shown in FIGS. **17**, **18** and **19**, to the chassis **100** via the countersink thru holes **128** with a chassis screw **130**. Several rows of countersink thru holes **128** are provided to allow the user to select the appropriate countersink thru hole **128** that results in the alignment of the front of the chassis **100** with the front of the high density fiber enclosure system **2** in the installed position. The user inserts the chassis screw **130** into the countersink thru hole **128** and into the chassis **100** to attach the mounting bracket **126**.

To mount the chassis **100** to the high density fiber enclosure system **2**, for example as shown in FIG. **46**, the user pre-installs screws into the retainment holes **10** disposed on the high density fiber enclosure system **2** without fully tightening the screws. The user hooks the rack mounting bracket **126** onto the pre-installed screws via the slotted and cut openings **132**, as shown in FIGS. **18** and **19** for example, and allows the chassis **100**, which is attached to the mounting bracket **126**, to rest in a generally horizontal position on the slotted and cut openings **132**. Once the chassis **100** is in the desired position, the user then tightens pre-installed screws to secure the chassis **100** into the high density fiber enclosure system **2**.

A user may load cassettes **400** into the cassette trays **200** of the chassis **100** from either the rear or front of the chassis **100**. To load a cassette **400** into the chassis **100** from the rear of the chassis **100**, a user may insert the cassette **400** into a right or left cassette bay **218** or **220**, for example as shown in FIG. **28**, with the front portion of the cassette **400**—i.e. the portion of the cassette **400** nearest the cassette front posts **410**—loaded into the cassette bay **218** or **220** first. Cassette front posts **410** are narrower than cassette rear posts **412** and therefore do not engage the rear post stops **238** as they pass the rear post stops **238**. The user may advance the cassette **400** into the cassette bay **218** or **220** until the cassette rear post **412** engages with the rear post stops **238**. When the cassette rear post **412** engages with the rear post stops **238**, the cassette **400** cannot be advanced further into cassette bay **218** or **220**. At the same time the cassette rear posts **412** engage the rear post stops **238**, the cassette front posts **410** engage with the catch wall **266** of the cassette flex beam **214**. The catch wall **266** of the cassette flex beam **214** holds the cassette front posts **410** such that they cannot be advanced further with respect to the cassette bay **218** or **220**. The catch wall **266** of the cassette flex beam **214** may apply rearward pressure on the cassette front post **410** to insure the cassette

rear posts **412** are securely engaged with rear post stops **238** and the cassette **400** does not rattle or otherwise move unintentionally. The user then may connect patch cords **4** and trunk cable furcation legs **6** to the cassette **400** as necessary. The user may also then route patch cords **4** and trunk cable furcation legs **6** as described below. Alternatively the user may install trunk cable furcation legs **6** into the cassette **400** prior to loading cassette **400** into cassette bay **218** or **220**.

To load a cassette **400** from the front of the high density fiber enclosure **2**, a user first advances the cassette tray **200** to the cassette addition or replacement position as described below. The user then inserts the cassette **400** into a right or left cassette bay **218** or **220**, for example as shown in FIGS. **28** and **29**, from the front of the chassis **100** with the rear portion—i.e. the portion of the cassette nearest the cassette rear posts **412**—loaded into the cassette bay **218** or **220** first by placing the rear of the cassette **400** on the base **210** of the cassette tray **200** such that the cassette rear posts **412** are located between the front post stop areas **234** and rear post stops **238** of the cassette tray rails **212**. The cassette **400** is slightly tilted upward such that the front portion of the cassette **400** is higher than the rear portion of the cassette **400**. The user then advances the cassette **400** in the rearward direction, maintaining the tilt of the cassette **400** as the front portion of the cassette **400** is in a somewhat higher position than the rear portion of the cassette **400**, until the rear posts **412** engage with the rear post stops **238**. By maintaining the front portion higher than the rear portion of the cassette **400**, contact with other equipment is minimized. The cassette **400** should clear any patch cords **4** that are connected to other cassettes **400** installed in the chassis **100** and routed through the cassette tray rail patch cord management loops **244**. Once the rear posts **412** are seated against the rear post stops **238**, the user applies downward pressure to the cassette **400** in the region of front posts **410**. As downward pressure is applied, the cassette flex beam **214** flexes to allow front posts **410** to slip past the front lead-in **268** of the catch wall **266** and into engagement with the catch wall **266** of the cassette flex beam **214**. The user then may connect patch cords **4** and trunk cable furcation legs **6** to the cassette **400** as necessary as well as route patch cords **4** and trunk cable furcation legs **6** as described below. Alternatively, a user may connect patch cords **4** prior to applying downward pressure to the cassette **400** to seat the front posts **410**.

A user may also unload cassettes **400** from the cassette trays **200** of the chassis **100** from either the rear or front of the chassis **100**. To unload cassettes **400** from the rear of the chassis **100**, a user first disconnects the patch cords **4** from the front of the chassis **100**, and then disconnects trunk cable furcation legs **6** from the rear of the chassis **100**. The user then locates and applies inward pressure to the rear post release latches **414** on the cassette **400**, for example as shown in FIGS. **36**A, **36**B, **37**, **38**, **39**, **40**, and **41**. As inward pressure is applied to the rear post release latches **414**, the latches **414** flex and rear posts **412** disengage with the rear post stops **238**. As the user continues to apply inward pressure to the rear post release latches **414**, the user pulls the cassette **400** toward the rear of the chassis **100** until the cassette **400** clears the chassis **100**.

FIGS. **29**, **30**, and **31** illustrate unloading cassettes **400** from the front of chassis **100**. To unload cassettes **400** from the front of the chassis **100**, a user may first position the cassette tray **200** in the cassette addition or replacement position as described below. A user then disconnect patch cords **4** from the front of the chassis **100**. The user may then apply upward pressure on the front portion of cassette **400** near the front posts **410**, accessing cassette **400** through the cassette opening **222**. The user applies enough upward pressure on the cassette **400** to cause the flex beam **214** to flex enough to allow front posts **410** to pass by the divot **272** of the catch wall **266** of the flex beam **214**. Once the front posts **410** have cleared the front lead-in **268** of the catch wall **266** of the flex beam **214**, the cassette **400** is tilted such that the front portion of the cassette **400** is higher than the rear portion of the cassette **400** as shown in FIG. **29**. A user may then pull the cassette **400** toward the front of the chassis **100** until the cassette **400** clears the chassis **100**, generally maintaining the tilt of cassette **400**, as shown in FIG. **30**. Once the trunk cable furcation legs **6** and MPO trunk adapters **508** or MPO FAP patch cord adapters **604** at the rear of cassette **400** are visible, a user may disconnect trunk cable furcation legs **6** from the MPO trunk adapters **508** or MPO FAP patch cord adapters **604** and cassette **400**. As shown in FIG. **31**, a user then preferably removes the cassette **400** by positioning the cassette **400** such that the rear posts **412** are level with front posts **410** so that the cassette **400** should clear any patch cords **4** that are connected to other cassettes **400** installed in the chassis **100** and routed through the cassette tray rail patch cord management loops **244**, as described below.

A user may also replace an LC-MPO cassette **500** with an MPO FAP **600**. First, a user may follow the procedures for removing a cassette **400** above in order to remove the LC-MPO cassette **500**. Next the user may connect the trunk cable furcation legs **6** to an MPO trunk adapter **604**, and insert the new MPO FAP **600** following the instructions for installation of a cassette **400** from the front of the chassis **100** above. If the user desires to add additional trunk cable furcation legs **6** to the MPO FAP **600** (which allows for up to five additional trunk cable furcation legs **6** to attach to five additional MPO trunk adapters **604**), the user may route the additional trunk cable furcation legs **6** through the rear of the cassette bay **218** or **220** into the MPO FAP **600** from the rear of the chassis **100**. As discussed above, for example with reference to FIGS. **38-41**, MPO FAP **600** includes a population feature **610** consisting of a plurality of offset rows of population feature pegs **612**. After routing the additional trunk cable furcation legs **6**, upon which dust caps **16** are installed, into the rear of the cassette **600**, the user may trap the MPO connectors **8** of the trunk cable furcation legs **6** between the population feature pegs **612**, by inserting the MPO connector **8** diagonally through the open path created by the offset rows of the population feature **610** and placing the trunk furcation leg **6** on the opposite side of the peg **612** located at the rear most section of the MPO FAP **600** as shown in FIG. **40**. The population feature pegs **612** may therefore temporarily lock the trunk cable furcation legs **6** in position, allowing the user to advance the cassette tray **200** to the cassette addition or replacement position described below. Because the trunk cable furcation legs **6** are locked into the population feature **610** of the MPO FAP **600**, they are secured from falling out of the rear of the chassis **100** and instead are pulled forward along with the MPO FAP **600**. Once the cassette **600** is in the cassette addition or replacement position the user may reach into the MPO FAP **600**, remove the dust caps **16**, and attach the additional trunk cable furcation legs **6** to any available MPO trunk adapters **604**. The user may then add and route any additional patch cords **4** as needed, and return the MPO FAP **600** to the home position.

As discussed above with reference to FIGS. **13**, **14** and **15**, for example, the tray guides **102**, **104**, and **106** include three detents, a front detent **120**, center detent **122**, and rear detent

124. The cassette chassis 100 also includes forward limiting flanges 116 and rear limiting brackets 118. Each of these features interacts with features of the cassette tray 200 to facilitate movement of the cassette tray 200 between three different positions—the home position, cord move or change position, and cassette replacement or addition position. In the home position, shown in FIG. 14, the protuberance 256 of the spring protrusion 230 is disposed within the rear detent 124. Additionally, the rearmost portions of the cassette tray rail support ribs 218 abut against the rear limiting brackets 118, thereby blocking any further rearward movement of the cassette tray 200.

In the patch cord move add or change position, the protuberance 256 of the spring protrusion 230 is located within the center detent 122, as shown in FIG. 14. In order to advance the cassette tray 200 from the home position, a user applies sufficient force toward the front of the chassis 100 to cause the spring protrusion 230 to flex and allow the protuberance 256 to escape from the rear detent 124. The user then continues to apply force toward the front of the chassis 100 until the protuberance 256 reaches the center detent 122, at which point the protuberance 256 interacts with the center detent 122, stopping the forward motion of the cassette tray 200.

If the user wishes to advance the cassette tray 200 to the cassette replacement or addition position, the user applies sufficient force toward the front of the chassis 100 to cause the spring protrusion 230 to flex and allow the protuberance 256 to escape from the center detent 122. The user then continues to apply force toward the front of the chassis 100 until the protuberance 256 reaches the front detent 120. At the same time the protuberance 256 reaches the front detent 120, the cassette tray 200 also engages with the forward limiting flanges 116 to block further forward movement of the cassette tray 200. In order to move the cassette tray 200 from the cassette replacement or addition position to either the home or patch cord move add or change positions, a user applies rearward force to the cassette tray 200 until the protuberance 256 reaches the center detent 122 for the patch cord move add or change position or the rear detent 124 for the home position.

A user may install a unification clip 300 to secure two adjacent cassette trays 200 in the same chassis 100 together such that they are advanced out of and retracted into the chassis 100 at the same time. In order to install the unification clip 300, a user may first advance the cassette trays 200 to the patch cord move add or change position, as shown in FIG. 13. As shown in FIGS. 9 and 10, a user may then insert the mounting posts 302 of the unification clip 300 into the unification clip slot 252 located on each cassette tray rail 212 such that the cable management area 304 of the unification clip 300 is disposed above and between the front patch cord management loops 244 of the cassette trays 200 that are being joined together. The user may then apply downward pressure to the unification clip 300 to cause the alignment posts 308 of the unification clip 300 to engage the top of the front-most portion of the cassette tray rails 240 or 242 to secure the unification clip 300 to the cassette trays 200 as well as align the cable management area 304 of the unification clip 300 with the front patch cord management loops 244 of the cassette trays 200. The joined cassette trays 200 may then be returned to the home position as one unit.

There are two preferred methods of routing patch cables 4 as they exit the front of the chassis 100, a split routing scheme method (for example as shown in FIGS. 44 and 45) and a unidirectional routing scheme method (for example as shown in FIGS. 42 and 43). The split routing scheme method may be used when a unification clip 300 is not installed. To use the split routing scheme, a user may insert patch cords 4 into the front patch cord management loop 244 by slipping the cords through the front patch cord management loop slot 250. The patch cords 4 attached to the cassette 400 installed in the left cassette tray 200 are routed through the left-most front patch cord management loop 244, while the patch cords 4 attached to the cassette 400 installed in the right cassette tray 200 are routed through the right-most front patch cord management loop 244. This arrangement allows each cassette tray 200 to be moved between the home, cord move or change, and cassette replacement or addition positions without disturbing the patch cords 4 attached to the cassettes 400 installed in the other cassette tray 200 contained in the same row as the moving cassette tray 200.

To route the patch cables using a unidirectional routing scheme, a user first installs the unification clip 300. The user then routes the patch cords 4 by routing them to the right or left of the chassis 100. The user may then insert each patch cord 4 into the front patch cord management loops 244 and/or the cable management area 304 of the unification clip 300 as the cords 4 pass by the front patch cord management loops 244 and/or the cable management area 304. The user inserts the patch cords 4 into the front patch cable management loops 244 by slipping the cords 4 through the front patch cord management loop slot 250. The user inserts patch cords 4 into the cable management area 244 of the unification clip 300 by slipping the cables 4 into the cable management area 304 via the top opening 306 of the unification clip 300. Because the patch cables 4 are routed in the same direction for both cassette trays 200 and the cassette trays 200 are joined together with the unification clip 300, both cassette trays 200 move between the home, cord move or change, and cassette replacement or addition positions simultaneously.

The invention claimed is:

1. A device to coordinate movement of a plurality of cassette trays, said device comprising:

a body having a first end, wherein said first end includes a plurality of mounting posts, each mounting post configured to engage one of at least two separate cassette tray rails such that said cassette trays are joined together by the body;

wherein said body includes a second end, a top portion and a bottom portion, wherein said bottom portion extends from said first end to said second end, said top portion includes an opening between said first end and said second end;

wherein said body includes a lumen bounded by said first end, said second end, said top portion and said bottom portion, wherein said lumen is configured to manage a plurality of cables.

2. The device of claim 1, wherein said top portion of said body includes an opening sufficient for cables to egress or ingress to the lumen.

3. The device of claim 1, further including plurality of alignment posts located on said second end of said body, wherein each alignment post is configured to engage a separate cassette tray rail.

4. A system to coordinate movement of a plurality of cassette trays, said system comprising:

a chassis configured to house a plurality of movable cassette trays,

wherein a first cassette tray includes a first tray base and a plurality of cassette tray rails, wherein a first cassette tray rail of said first cassette tray is disposed at one end portion of said first tray base and a second

cassette tray rail of said first cassette tray is disposed at a second end portion of said first tray base, where the first cassette tray rail of said first cassette tray and the second cassette tray rail of said first cassette tray are disposed in a parallel orientation;

wherein at least one of said first cassette tray trail rail of said first cassette tray or said second cassette tray rail of said first cassette tray includes a unification clip slot configured to receive a unification clip;

wherein a second cassette tray includes a second tray base and a plurality of cassette tray rails, wherein a first cassette tray rail of said second cassette tray is disposed at one end portion of said second tray base and a second cassette tray rail of said second cassette tray is disposed at a second end portion of said second tray base, where the first cassette tray rail of said second cassette tray and the second cassette tray rail of said second cassette tray are disposed in a parallel orientation;

wherein at least one of said first cassette tray rail of said second cassette tray or said second cassette tray rail of said second cassette tray includes a unification clip slot configured to receive a unification clip;

wherein said second cassette tray rail of said first cassette tray is adjacent to said first cassette tray rail of said second cassette tray; and,

wherein said first cassette tray and said second cassette tray are positioned adjacent to each other in the same row;

a unification clip having a body with a first end, wherein said first end includes a first mounting post and a second mounting post, wherein said first mounting post is configured to engage a unification clip slot of said second cassette tray rail of said first cassette tray, wherein said second mounting post is configured to engage a unification clip slot of said first cassette tray rail of said second cassette tray; and,

wherein said first cassette tray and said second cassette tray are joined together by the unification clip.

5. The system of claim **4**, wherein said first cassette tray and said second cassette tray are configured to move together within said chassis.

6. The system of claim **4**, wherein said unification clip includes a second end, a top portion and a bottom portion, wherein said bottom portion extends from said first end to said second end, said top portion includes an opening between said first end and said second end.

7. The system **6**, wherein said unification clip includes a lumen bounded by said first end, said second end, said top portion and said bottom portion, wherein said lumen is configured to manage a plurality of cables.

8. The system of claim **7**, wherein said top portion of said unification clip includes an opening sufficient for cables to egress or ingress to the lumen.

9. The system of claim **6**, further including a plurality of alignment posts located on said second end of said unification clip, wherein each alignment post is configured to engage a separate cassette tray rail.

* * * * *