US009075216B2

(12) **United States Patent**
Cote et al.

(10) **Patent No.: US 9,075,216 B2**
(45) **Date of Patent: Jul. 7, 2015**

(54) **FIBER OPTIC HOUSINGS CONFIGURED TO ACCOMMODATE FIBER OPTIC MODULES/CASSETTES AND FIBER OPTIC PANELS, AND RELATED COMPONENTS AND METHODS**

(75) Inventors: **Monique L. Cote**, Fort Worth, TX (US); **Brent M. Frazier**, Haslet, TX (US); **William J. Giraud**, Azle, TX (US); **Raymond G. Jay**, Mansfield, TX (US); **Diana Rodriguez**, Fort Worth, TX (US)

(73) Assignee: **Corning Cable Systems LLC**, Hickory, NC (US)

(*) Notice: Subject to any disclaimer, the term of this patent is extended or adjusted under 35 U.S.C. 154(b) by 826 days.

(21) Appl. No.: **12/940,585**

(22) Filed: **Nov. 5, 2010**

(65) **Prior Publication Data**

US 2011/0268404 A1 Nov. 3, 2011

Related U.S. Application Data

(60) Provisional application No. 61/329,925, filed on Apr. 30, 2010, provisional application No. 61/329,948, filed on Apr. 30, 2010, provisional application No. 61/329,898, filed on Apr. 30, 2010, provisional

(Continued)

(51) **Int. Cl.**
G02B 6/00 (2006.01)
G02B 6/44 (2006.01)

(52) **U.S. Cl.**
CPC ***G02B 6/4452*** (2013.01)

(58) **Field of Classification Search**
USPC 385/135
See application file for complete search history.

(56) **References Cited**

U.S. PATENT DOCUMENTS

620,013	A	2/1899	Barnes
2,614,685	A	10/1952	Miller
3,175,873	A	3/1965	Blomquist et al.

(Continued)

FOREIGN PATENT DOCUMENTS

CA	2029592	A1	5/1992
CA	2186314	A1	4/1997

(Continued)

OTHER PUBLICATIONS

Non-Final Office Action for U.S. Appl. No. 12/953,039 mailed Jan. 11, 2013, 6 pages.

(Continued)

Primary Examiner — Uyen Chau N Le
Assistant Examiner — Hoang Tran
(74) *Attorney, Agent, or Firm* — Brad Christopher Rametta

(57) **ABSTRACT**

Fiber optic housings configured to accommodate fiber optic modules/cassettes and fiber optic panels are disclosed. In one embodiment, a fiber optic apparatus is provided and comprised of a fiber optic housing and one or more removable panel clips. Each of the one or more removable panel clips includes at least one receptacle configured to receive an insert of a fiber optic panel to support the fiber optic panel in the fiber optic housing. In another embodiment, a fiber optic shelf configured to be supported in a fiber optic housing is provided. The fiber optic shelf comprises a mounting surface and one or more removable panel clips attached to the mounting surface that each includes at least one receptacle configured to receive an insert of a fiber optic panel to support the fiber optic panel in the mounting surface. Related components and methods are also disclosed.

49 Claims, 63 Drawing Sheets

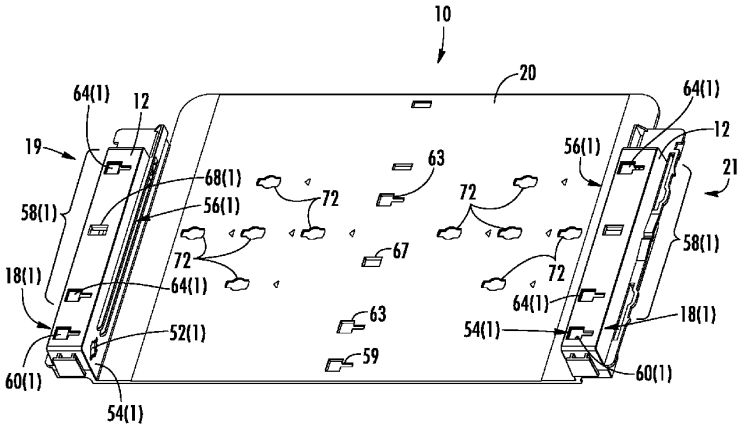

CommScope Ex. 1019

Related U.S. Application Data

application No. 61/332,572, filed on May 7, 2010, provisional application No. 61/332,548, filed on May 7, 2010, provisional application No. 61/332,529, filed on May 7, 2010, provisional application No. 61/332,508, filed on May 7, 2010, provisional application No. 61/180,331, filed on May 21, 2009.

(56) **References Cited**

U.S. PATENT DOCUMENTS

3,212,192	A	10/1965	Bachmann et al.
3,433,886	A	3/1969	Myers
3,494,306	A	2/1970	Aguilar
3,568,263	A	3/1971	Meehan
3,646,244	A	2/1972	Cole
3,701,835	A	10/1972	Eisele et al.
3,880,396	A	4/1975	Freiberger et al.
3,906,592	A	9/1975	Sakasegawa et al.
3,991,960	A	11/1976	Tanaka
4,047,797	A	9/1977	Arnold et al.
4,059,872	A	11/1977	Delesandri
4,119,285	A	10/1978	Bisping et al.
4,239,316	A	12/1980	Spaulding
4,285,486	A	8/1981	Von Osten et al.
4,354,731	A	10/1982	Mouissie
4,457,482	A	7/1984	Kitagawa
4,525,012	A	6/1985	Dunner
4,540,222	A	9/1985	Burrell
4,564,163	A	1/1986	Barnett
4,597,173	A	7/1986	Chino et al.
4,611,875	A	9/1986	Clarke et al.
4,635,886	A	1/1987	Santucci et al.
4,645,292	A	2/1987	Sammueller
4,657,340	A	4/1987	Tanaka et al.
4,681,288	A	7/1987	Nakamura
4,702,551	A	10/1987	Coulombe
4,736,100	A	4/1988	Vastagh
4,744,629	A	5/1988	Bertoglio et al.
4,747,020	A	5/1988	Brickley et al.
4,752,110	A	6/1988	Blanchet et al.
4,787,706	A	11/1988	Cannon, Jr. et al.
4,792,203	A	12/1988	Nelson et al.
4,798,432	A	1/1989	Becker et al.
4,805,979	A	2/1989	Bossard et al.
4,808,774	A	2/1989	Crane
4,824,193	A	4/1989	Maeda et al.
4,824,196	A	4/1989	Bylander
4,826,277	A	5/1989	Weber et al.
4,838,643	A	6/1989	Hodges et al.
4,840,449	A	6/1989	Ghandeharizadeh
4,865,280	A	9/1989	Wollar
4,898,448	A	2/1990	Cooper
4,900,123	A	2/1990	Barlow
4,911,662	A	3/1990	Debortoli et al.
4,948,220	A	8/1990	Violo et al.
4,949,376	A	8/1990	Nieves et al.
4,971,421	A	11/1990	Ori
4,991,928	A	2/1991	Zimmer
4,995,688	A	2/1991	Anton et al.
5,001,602	A	3/1991	Suffi et al.
5,005,941	A	4/1991	Barlow et al.
5,017,211	A	5/1991	Wenger et al.
5,023,646	A	6/1991	Ishida et al.
5,024,498	A	6/1991	Becker et al.
5,028,114	A	7/1991	Krausse et al.
5,037,175	A	8/1991	Weber
5,048,918	A	9/1991	Daems et al.
5,066,149	A	11/1991	Wheeler et al.
5,067,784	A	11/1991	Debortoli et al.
5,071,211	A	12/1991	Debortoli et al.
5,071,220	A	12/1991	Ruello et al.
5,073,042	A	12/1991	Mulholland et al.
5,074,635	A	12/1991	Justice et al.
5,076,688	A	12/1991	Bowen et al.
5,080,459	A	1/1992	Wettengel et al.
5,100,221	A	3/1992	Carney et al.
5,104,336	A	4/1992	Hatanaka et al.
5,125,060	A	6/1992	Edmundson
5,127,082	A	6/1992	Below et al.
5,127,851	A	7/1992	Hilbert et al.
5,129,030	A	7/1992	Petrunia
5,129,607	A	7/1992	Satoh
5,133,039	A	7/1992	Dixit
5,138,678	A	8/1992	Briggs et al.
5,138,688	A	8/1992	Debortoli
5,142,598	A	8/1992	Tabone
5,142,607	A	8/1992	Petrotta et al.
5,150,277	A	9/1992	Bainbridge et al.
D330,368	S	10/1992	Bourgeois et al.
5,152,760	A	10/1992	Latina
5,153,910	A	10/1992	Mickelson et al.
5,157,749	A	10/1992	Briggs et al.
5,167,001	A	11/1992	Debortoli et al.
5,170,452	A	12/1992	Ott
5,189,723	A	2/1993	Johnson et al.
5,199,099	A	3/1993	Dalgoutte
5,204,929	A	4/1993	Machall et al.
5,209,572	A	5/1993	Jordan
5,214,735	A	5/1993	Henneberger et al.
5,224,186	A	6/1993	Kishimoto et al.
5,231,687	A	7/1993	Handley
5,231,688	A	7/1993	Zimmer
5,233,674	A	8/1993	Vladic
5,239,609	A	8/1993	Auteri
5,243,679	A	9/1993	Sharrow et al.
5,253,320	A	10/1993	Takahashi et al.
5,260,957	A	11/1993	Hakimi et al.
5,261,633	A	11/1993	Mastro
5,265,187	A	11/1993	Morin et al.
5,274,731	A	12/1993	White
5,278,933	A	1/1994	Hunsinger et al.
5,280,138	A	1/1994	Preston et al.
5,285,515	A	2/1994	Milanowski et al.
5,315,679	A	5/1994	Baldwin et al.
5,317,663	A	5/1994	Beard et al.
5,323,478	A	6/1994	Milanowski et al.
5,323,480	A	6/1994	Mullaney et al.
5,333,193	A	7/1994	Cote et al.
5,333,221	A	7/1994	Briggs et al.
5,333,222	A	7/1994	Belenkiy et al.
5,337,400	A	8/1994	Morin et al.
5,339,379	A	8/1994	Kutsch et al.
5,347,603	A	9/1994	Belenkiy et al.
5,353,367	A	10/1994	Czosnowski et al.
5,359,688	A	10/1994	Underwood
5,363,466	A	11/1994	Milanowski et al.
5,363,467	A	11/1994	Keith
5,366,388	A	11/1994	Freeman et al.
5,367,598	A	11/1994	Devenish, III et al.
5,373,421	A	12/1994	Detsikas et al.
5,383,051	A	1/1995	Delrosso et al.
5,390,272	A	2/1995	Repta et al.
5,398,295	A	3/1995	Chang et al.
5,398,820	A	3/1995	Kiss
5,399,814	A	3/1995	Staber et al.
5,401,193	A	3/1995	Lo Cicero et al.
5,402,515	A	3/1995	Vidacovich et al.
5,408,557	A	4/1995	Hsu
RE34,955	E	5/1995	Anton et al.
5,412,751	A	5/1995	Siemon et al.
5,416,837	A	5/1995	Cote et al.
5,418,874	A	5/1995	Carlisle et al.
5,420,956	A	5/1995	Grugel et al.
5,420,958	A	5/1995	Henson et al.
5,421,532	A	6/1995	Richter
5,438,641	A	8/1995	Malacarne
5,442,725	A	8/1995	Peng
5,442,726	A	8/1995	Howard et al.
5,443,232	A	8/1995	Kesinger et al.
5,444,804	A	8/1995	Yui et al.
5,448,015	A	9/1995	Jamet et al.
5,450,518	A	9/1995	Burek et al.
5,458,019	A	10/1995	Trevino
5,471,555	A	11/1995	Braga et al.

(56) **References Cited**

U.S. PATENT DOCUMENTS

5,479,505 A 12/1995 Butler et al.
5,481,634 A 1/1996 Anderson et al.
5,481,939 A 1/1996 Bernardini
5,490,229 A 2/1996 Ghandeharizadeh et al.
5,497,416 A 3/1996 Butler, III et al.
5,497,444 A 3/1996 Wheeler 385/135
5,511,144 A 4/1996 Hawkins et al.
5,511,798 A 4/1996 Kawamoto et al.
5,519,804 A 5/1996 Burek et al.
5,530,786 A 6/1996 Radliff et al.
5,535,970 A 7/1996 Gobbi
5,542,015 A 7/1996 Hultermans
5,546,495 A 8/1996 Bruckner et al.
5,548,641 A 8/1996 Butler et al.
5,553,183 A 9/1996 Bechamps
5,553,186 A 9/1996 Allen
5,572,617 A 11/1996 Bernhardt et al.
5,575,680 A 11/1996 Suffi
5,577,151 A 11/1996 Hoffer
5,590,234 A 12/1996 Pulido
5,595,507 A 1/1997 Braun et al.
5,596,670 A 1/1997 Debortoli et al.
5,600,020 A 2/1997 Wehle et al.
5,602,954 A 2/1997 Nolf et al.
5,608,606 A 3/1997 Blaney
5,613,030 A 3/1997 Hoffer et al.
5,617,501 A 4/1997 Miller et al.
5,638,474 A 6/1997 Lampert et al.
5,640,476 A 6/1997 Womack et al.
5,640,482 A 6/1997 Barry et al.
5,647,043 A 7/1997 Anderson et al.
5,647,045 A 7/1997 Robinson et al.
5,650,334 A 7/1997 Zuk et al.
5,668,911 A 9/1997 Debortoli
5,671,273 A 9/1997 Lanquist
5,689,605 A 11/1997 Cobb et al.
5,689,607 A 11/1997 Vincent et al.
5,694,511 A 12/1997 Pimpinella et al.
5,701,380 A 12/1997 Larson et al.
5,704,573 A 1/1998 de Beers et al.
5,708,742 A 1/1998 Beun et al.
5,708,751 A 1/1998 Mattei
5,710,851 A 1/1998 Walter et al.
5,717,810 A 2/1998 Wheeler
5,724,467 A 3/1998 vandenEnden et al. 385/134
5,734,776 A 3/1998 Puetz
5,740,300 A 4/1998 Hodge
5,742,982 A 4/1998 Dodd et al.
5,751,874 A 5/1998 Chudoba et al.
5,751,882 A 5/1998 Daems et al.
5,754,724 A 5/1998 Peterson et al.
5,758,003 A 5/1998 Wheeler et al.
5,758,004 A 5/1998 Alarcon et al.
5,761,026 A 6/1998 Robinson et al.
5,765,698 A 6/1998 Bullivant
5,769,908 A 6/1998 Koppelman
5,774,612 A 6/1998 Belenkiy et al.
5,778,122 A 7/1998 Giebel et al.
5,778,130 A 7/1998 Walters et al.
5,781,686 A 7/1998 Robinson et al.
5,788,087 A 8/1998 Orlando
5,790,741 A 8/1998 Vincent et al.
5,793,920 A 8/1998 Wilkins et al.
5,793,921 A 8/1998 Wilkins et al.
5,796,908 A 8/1998 Vicory
5,823,646 A 10/1998 Arizpe et al.
5,825,955 A 10/1998 Ernst et al.
5,825,961 A 10/1998 Wilkins et al.
5,828,807 A 10/1998 Tucker et al.
5,832,162 A 11/1998 Sarbell
5,835,657 A 11/1998 Suarez et al.
5,835,658 A 11/1998 Smith
5,862,290 A 1/1999 Burek et al.
5,870,519 A 2/1999 Jenkins et al.
5,874,733 A 2/1999 Silver et al.
5,877,565 A 3/1999 Hollenbach et al.
5,880,864 A 3/1999 Williams et al.
5,881,200 A 3/1999 Burt
5,883,995 A 3/1999 Lu
5,884,003 A 3/1999 Cloud et al.
5,887,095 A 3/1999 Nagase et al.
5,887,106 A 3/1999 Cheeseman et al.
5,892,877 A 4/1999 Meyerhoefer
5,894,540 A 4/1999 Drewing
5,901,220 A 5/1999 Garver et al.
5,903,693 A 5/1999 Brown
5,906,342 A 5/1999 Kraus
5,909,298 A 6/1999 Shimada et al.
5,913,006 A 6/1999 Summach
5,914,976 A 6/1999 Jayaraman et al.
5,915,055 A 6/1999 Bennett et al.
5,923,804 A 7/1999 Rosson
5,930,425 A 7/1999 Abel et al.
5,933,557 A 8/1999 Ott
5,940,563 A 8/1999 Kobayashi et al.
5,943,460 A 8/1999 Mead et al.
5,945,633 A 8/1999 Ott et al.
5,946,440 A 8/1999 Puetz
5,949,946 A 9/1999 Debortoli et al.
5,953,962 A 9/1999 Hewson
5,956,439 A 9/1999 Pimpinella
5,956,444 A 9/1999 Duda et al.
5,956,449 A 9/1999 Otani et al.
5,966,492 A 10/1999 Bechamps et al.
5,969,294 A 10/1999 Eberle et al.
5,975,769 A 11/1999 Larson et al.
5,978,540 A 11/1999 Bechamps et al.
5,980,303 A 11/1999 Lee et al.
5,993,071 A 11/1999 Hultermans
5,995,700 A 11/1999 Burek et al.
5,999,393 A 12/1999 Brower
6,001,831 A 12/1999 Papenfuhs et al.
6,009,224 A 12/1999 Allen
6,009,225 A 12/1999 Ray et al.
6,011,831 A 1/2000 Nieves et al.
6,027,252 A 2/2000 Erdman et al.
6,044,193 A 3/2000 Szentesi et al.
6,058,235 A 5/2000 Hiramatsu et al.
6,061,492 A 5/2000 Strause et al.
6,078,661 A 6/2000 Arnett et al.
6,079,881 A 6/2000 Roth
6,127,627 A 10/2000 Daoud
6,130,983 A 10/2000 Cheng
6,134,370 A 10/2000 Childers et al.
6,149,313 A 11/2000 Giebel et al.
6,149,315 A 11/2000 Stephenson
6,151,432 A 11/2000 Nakajima et al.
6,160,946 A 12/2000 Thompson et al.
6,170,784 B1 1/2001 MacDonald et al.
6,175,079 B1 1/2001 Johnston et al.
6,181,861 B1 1/2001 Wenski et al.
6,188,687 B1 2/2001 Mussman et al.
6,188,825 B1 2/2001 Bandy et al.
6,192,180 B1 2/2001 Kim et al.
6,201,920 B1 3/2001 Noble et al.
6,208,796 B1 3/2001 Williams Vigliaturo
6,212,324 B1 4/2001 Lin et al.
6,215,938 B1 4/2001 Reitmeier et al.
6,216,987 B1 4/2001 Fukuo
6,227,717 B1 5/2001 Ott et al.
6,229,948 B1 5/2001 Blee et al.
6,234,683 B1 5/2001 Waldron et al.
6,234,685 B1 5/2001 Carlisle et al.
6,236,795 B1 5/2001 Rodgers
6,240,229 B1 5/2001 Roth
6,243,522 B1 6/2001 Allan et al.
6,245,998 B1 6/2001 Curry et al.
6,263,141 B1 7/2001 Smith
6,265,680 B1 7/2001 Robertson
6,269,212 B1 7/2001 Schiattone
6,275,641 B1 8/2001 Daoud
6,278,829 B1 8/2001 BuAbbud et al.
6,278,831 B1 8/2001 Henderson et al.
D448,005 S 9/2001 Klein, Jr. et al.

(56) **References Cited**

U.S. PATENT DOCUMENTS

6,289,618 B1 9/2001 Kump et al.
6,292,614 B1 9/2001 Smith et al.
6,301,424 B1 10/2001 Hwang
6,307,997 B1 10/2001 Walters et al.
6,318,824 B1 11/2001 LaGrotta et al.
6,321,017 B1 11/2001 Janus et al.
6,322,279 B1 11/2001 Yamamoto et al.
6,325,549 B1 12/2001 Shevchuk
6,327,059 B1 12/2001 Bhalla et al.
RE37,489 E 1/2002 Anton et al.
6,343,313 B1 1/2002 Salesky et al.
6,344,615 B1 2/2002 Nolf et al.
6,347,888 B1 2/2002 Puetz
6,353,696 B1 3/2002 Gordon et al.
6,353,697 B1 3/2002 Daoud
6,357,712 B1 3/2002 Lu
6,359,228 B1 3/2002 Strause et al.
6,363,200 B1 3/2002 Thompson et al.
6,370,309 B1 4/2002 Daoud
6,371,419 B1 4/2002 Ohnuki
6,375,129 B2 4/2002 Koziol
6,377,218 B1 4/2002 Nelson et al.
6,379,052 B1 4/2002 De Jong et al.
6,385,374 B2 5/2002 Kropp
6,385,381 B1 5/2002 Janus et al.
6,389,214 B1 5/2002 Smith et al.
6,397,166 B1 5/2002 Leung et al.
6,398,149 B1 * 6/2002 Hines et al. 242/399
6,411,767 B1 6/2002 Burrous et al.
6,418,262 B1 7/2002 Puetz et al.
6,424,781 B1 7/2002 Puetz et al.
6,425,694 B1 7/2002 Szilagyi et al.
6,427,045 B1 7/2002 Matthes et al.
6,431,762 B1 8/2002 Taira et al.
6,434,313 B1 8/2002 Clapp, Jr. et al.
6,438,310 B1 8/2002 Lance et al.
6,452,925 B1 9/2002 Sistanizadeh et al.
6,456,773 B1 9/2002 Keys
6,464,402 B1 10/2002 Andrews et al.
6,466,724 B1 10/2002 Glover et al.
6,469,905 B1 10/2002 Hwang
D466,087 S 11/2002 Cuny et al.
6,478,472 B1 11/2002 Anderson et al.
6,480,487 B1 11/2002 Wegleitner et al.
6,480,660 B1 11/2002 Reitmeier et al.
6,483,977 B2 11/2002 Battey et al.
6,484,958 B1 11/2002 Xue et al.
6,496,640 B1 12/2002 Harvey et al.
6,504,988 B1 1/2003 Trebesch et al.
6,507,980 B2 1/2003 Bremicker
6,510,274 B1 1/2003 Wu et al.
6,515,227 B1 2/2003 Massey et al. 174/50
6,532,332 B2 3/2003 Solheid et al.
6,533,472 B1 3/2003 Dinh et al.
6,535,397 B2 3/2003 Clark et al.
6,535,682 B1 3/2003 Puetz et al.
6,539,147 B1 3/2003 Mahony
6,539,160 B2 3/2003 Battey et al.
6,542,688 B1 4/2003 Battey et al.
6,550,977 B2 4/2003 Hizuka
6,554,485 B1 4/2003 Beatty et al.
6,560,334 B1 5/2003 Mullaney et al.
6,567,601 B2 5/2003 Daoud et al.
6,571,048 B1 5/2003 Bechamps et al.
6,577,595 B1 6/2003 Counterman
6,577,801 B2 6/2003 Broderick et al.
6,579,014 B2 6/2003 Melton et al.
6,584,267 B1 6/2003 Caveney et al.
6,587,630 B2 7/2003 Spence et al.
6,588,938 B1 7/2003 Lampert et al.
6,591,051 B2 7/2003 Solheid et al.
6,591,053 B2 7/2003 Fritz
6,592,266 B1 7/2003 Hankins et al.
6,597,670 B1 7/2003 Tweedy et al.
6,600,866 B2 7/2003 Gatica et al.
6,601,997 B2 8/2003 Ngo
6,612,515 B1 9/2003 Tinucci et al.
6,614,978 B1 9/2003 Caveney
6,614,980 B1 9/2003 Mahony
6,621,975 B2 9/2003 Laporte et al.
6,625,374 B2 9/2003 Holman et al.
6,625,375 B1 9/2003 Mahony
6,631,237 B2 10/2003 Knudsen et al.
6,640,042 B2 10/2003 Araki et al.
RE38,311 E 11/2003 Wheeler
6,644,863 B1 11/2003 Azami et al.
6,647,197 B1 11/2003 Marrs et al.
6,648,520 B2 11/2003 McDonald et al.
6,654,536 B2 11/2003 Battey et al.
6,668,127 B1 12/2003 Mahony
6,669,149 B2 12/2003 Akizuki
6,677,520 B1 1/2004 Kim et al.
6,679,604 B1 1/2004 Bove et al.
6,684,005 B1 1/2004 Egnell et al.
6,687,450 B1 2/2004 Kempeneers et al.
6,693,552 B1 2/2004 Herzig et al.
6,701,056 B2 3/2004 Burek et al.
6,710,366 B1 3/2004 Lee et al.
6,715,619 B2 4/2004 Kim et al.
6,719,149 B2 4/2004 Tomino
6,741,784 B1 5/2004 Guan
6,741,785 B2 5/2004 Barthel et al.
6,746,037 B1 6/2004 Kaplenski et al.
6,748,154 B2 6/2004 O'Leary et al.
6,748,155 B2 6/2004 Kim et al.
6,758,600 B2 7/2004 Del Grosso et al.
6,768,860 B2 7/2004 Liberty
6,771,861 B2 8/2004 Wagner et al.
6,773,297 B2 8/2004 Komiya
6,778,525 B1 8/2004 Baum et al.
6,778,752 B2 8/2004 Laporte et al.
6,786,647 B1 9/2004 Hinds et al.
6,788,871 B2 9/2004 Taylor
6,792,190 B2 9/2004 Xin et al.
6,798,751 B1 9/2004 Voit et al.
6,804,447 B2 10/2004 Smith et al.
6,810,194 B2 10/2004 Griffiths et al.
6,813,412 B2 11/2004 Lin
6,816,660 B2 11/2004 Nashimoto
6,818,834 B1 11/2004 Lin
6,819,856 B2 11/2004 Dagley et al.
6,819,857 B2 11/2004 Douglas et al.
6,826,174 B1 11/2004 Erekson et al.
6,826,346 B2 11/2004 Sloan et al.
6,830,489 B2 12/2004 Aoyama
6,839,428 B2 1/2005 Brower et al.
6,839,438 B1 1/2005 Riegelsberger et al.
6,840,815 B2 1/2005 Musolf et al.
6,845,207 B2 1/2005 Schray
6,848,862 B1 2/2005 Schlig
6,850,685 B2 2/2005 Tinucci et al.
6,853,637 B1 2/2005 Norrell et al.
6,854,894 B1 2/2005 Yunker et al.
6,856,334 B1 2/2005 Fukui
6,865,331 B2 3/2005 Mertesdorf
6,865,334 B2 3/2005 Cooke et al.
6,866,541 B2 3/2005 Barker et al.
6,868,216 B1 3/2005 Gehrke
6,869,227 B2 3/2005 Del Grosso et al.
6,870,734 B2 3/2005 Mertesdorf et al.
6,870,997 B2 3/2005 Cooke
6,879,545 B2 4/2005 Cooke et al.
6,915,058 B2 7/2005 Pons
6,920,273 B2 7/2005 Knudsen
6,920,274 B2 7/2005 Rapp et al.
6,923,406 B2 8/2005 Akizuki
6,925,241 B2 8/2005 Bohle et al.
6,934,451 B2 8/2005 Cooke
6,934,456 B2 8/2005 Ferris et al.
6,935,598 B2 8/2005 Sono et al.
6,937,807 B2 8/2005 Franklin et al.
6,944,383 B1 9/2005 Herzog et al.
6,944,389 B2 9/2005 Giraud et al.
6,952,530 B2 10/2005 Helvajian et al.

(56) **References Cited**

U.S. PATENT DOCUMENTS

6,963,690	B1	11/2005	Kassal et al.
6,968,107	B2	11/2005	Belardi et al.
6,968,111	B2	11/2005	Trebesch et al.
6,985,665	B2	1/2006	Baechtle
6,993,237	B2	1/2006	Cooke et al.
7,000,784	B2	2/2006	Canty et al.
7,005,582	B2	2/2006	Muller et al.
7,006,748	B2	2/2006	Dagley et al.
7,007,296	B2	2/2006	Rakib
7,027,695	B2	4/2006	Cooke et al.
7,027,706	B2	4/2006	Diaz et al.
7,031,588	B2	4/2006	Cowley et al.
7,035,510	B2	4/2006	Zimmel et al.
7,038,137	B2	5/2006	Grubish et al.
7,054,513	B2	5/2006	Herz et al.
7,066,748	B2	6/2006	Bricaud et al.
7,068,907	B2	6/2006	Schray
7,070,459	B2	7/2006	Denovich et al.
7,077,710	B2	7/2006	Haggay et al.
7,079,744	B2	7/2006	Douglas et al.
7,090,406	B2	8/2006	Melton et al.
7,090,407	B2	8/2006	Melton et al.
7,094,095	B1	8/2006	Caveney
7,097,047	B2	8/2006	Lee et al.
7,101,093	B2	9/2006	Hsiao et al.
7,102,884	B2	9/2006	Mertesdorf et al.
7,103,255	B2	9/2006	Reagan et al.
7,110,654	B2	9/2006	Dillat
7,111,990	B2	9/2006	Melton et al.
7,113,679	B2	9/2006	Melton et al.
7,113,686	B2	9/2006	Bellekens et al.
7,113,687	B2	9/2006	Womack et al.
7,116,491	B1	10/2006	Willey et al.
7,116,883	B2	10/2006	Kline et al.
7,118,281	B2	10/2006	Chiu et al.
7,118,405	B2	10/2006	Peng
7,120,347	B2	10/2006	Blackwell, Jr. et al.
7,120,348	B2	10/2006	Trebesch et al.
7,120,349	B2	10/2006	Elliott
7,128,471	B2	10/2006	Wilson
7,139,462	B1	11/2006	Richtman
7,140,903	B2	11/2006	Pulizzi et al.
7,170,466	B2	1/2007	Janoschka
7,171,099	B2	1/2007	Barnes et al.
7,171,121	B1	1/2007	Skarica et al.
7,181,142	B1	2/2007	Xu et al.
7,193,783	B2	3/2007	Willey et al.
7,194,181	B2	3/2007	Holmberg et al.
7,195,521	B2	3/2007	Musolf et al.
7,200,314	B2	4/2007	Womack et al.
7,200,316	B2	4/2007	Giraud et al.
7,220,065	B2	5/2007	Han et al.
7,221,832	B2	5/2007	Tinucci
7,228,036	B2	6/2007	Elkins, II et al.
7,231,125	B2	6/2007	Douglas et al.
7,234,878	B2	6/2007	Yamauchi et al.
7,236,677	B2	6/2007	Escoto et al.
7,239,789	B2	7/2007	Grubish et al.
7,245,809	B1	7/2007	Gniadek et al.
7,259,325	B2	8/2007	Pincu et al.
7,266,283	B2	9/2007	Kline et al.
7,270,485	B1	9/2007	Robinson et al.
7,272,291	B2	9/2007	Bayazit et al.
7,274,852	B1	9/2007	Smrha et al.
7,287,913	B2	10/2007	Keenum et al.
7,289,731	B2	10/2007	Thinguldstad
7,292,769	B2	11/2007	Watanabe et al.
7,298,950	B2	11/2007	Frohlich
7,300,216	B2	11/2007	Morse et al.
7,300,308	B2	11/2007	Laursen et al.
7,302,149	B2	11/2007	Swam et al.
7,302,153	B2	11/2007	Thom
7,302,154	B2	11/2007	Trebesch et al.
7,308,184	B2	12/2007	Barnes et al.
7,310,471	B2	12/2007	Bayazit et al.
7,310,472	B2	12/2007	Haberman
7,315,681	B2	1/2008	Kewitsch
7,325,975	B2	2/2008	Yamada et al.
7,330,625	B2	2/2008	Barth
7,330,626	B2	2/2008	Kowalczyk et al.
7,330,629	B2	2/2008	Cooke et al.
7,331,718	B2	2/2008	Yazaki et al.
7,340,145	B2	3/2008	Allen
7,349,615	B2	3/2008	Frazier et al.
7,373,071	B2	5/2008	Douglas et al.
7,376,321	B2	5/2008	Bolster et al.
7,376,323	B2	5/2008	Zimmel
7,391,952	B1	6/2008	Ugolini et al.
7,397,996	B2	7/2008	Herzog et al.
7,400,813	B2	7/2008	Zimmel
7,404,736	B2	7/2008	Herbst et al.
7,409,137	B2	8/2008	Barnes
7,414,198	B2	8/2008	Stansbie et al.
7,417,188	B2	8/2008	McNutt et al.
7,418,182	B2	8/2008	Krampotich
7,418,184	B1	8/2008	Gonzales et al.
7,421,182	B2	9/2008	Bayazit et al.
7,428,363	B2	9/2008	Leon et al.
7,437,049	B2	10/2008	Krampotich
7,439,453	B2	10/2008	Murano et al.
7,454,113	B2	11/2008	Barnes
7,460,757	B2	12/2008	Hoehne et al.
7,460,758	B2	12/2008	Xin
7,461,981	B2	12/2008	Yow, Jr. et al.
7,462,779	B2	12/2008	Caveney et al.
7,463,810	B2	12/2008	Bayazit et al.
7,463,811	B2	12/2008	Trebesch et al.
7,469,090	B2	12/2008	Ferris et al.
7,471,867	B2	12/2008	Vogel et al.
7,474,828	B2	1/2009	Leon et al.
7,477,824	B2	1/2009	Reagan et al.
7,477,826	B2	1/2009	Mullaney et al.
7,480,438	B2	1/2009	Douglas et al.
7,488,205	B2	2/2009	Spisany et al.
7,493,002	B2	2/2009	Coburn et al.
7,496,269	B1	2/2009	Lee
7,499,622	B2	3/2009	Castonguay et al.
7,499,623	B2	3/2009	Barnes et al.
7,507,111	B2	3/2009	Togami et al.
7,509,015	B2	3/2009	Murano
7,509,016	B2	3/2009	Smith et al.
7,522,804	B2	4/2009	Araki et al.
7,523,898	B1	4/2009	Barry et al.
7,526,171	B2	4/2009	Caveney et al.
7,526,172	B2	4/2009	Gniadek et al.
7,526,174	B2	4/2009	Leon et al.
7,529,458	B2	5/2009	Spisany et al.
7,534,958	B2	5/2009	McNutt et al.
7,536,075	B2	5/2009	Zimmel
7,542,645	B1	6/2009	Hua et al.
7,555,193	B2	6/2009	Rapp et al.
7,558,458	B2	7/2009	Gronvall et al.
7,565,051	B2	7/2009	Vongseng
7,567,744	B2	7/2009	Krampotich et al.
7,570,860	B2	8/2009	Smrha et al.
7,570,861	B2	8/2009	Smrha et al.
7,577,331	B2	8/2009	Laurisch et al.
7,603,020	B1	10/2009	Wakileh et al.
7,607,938	B2	10/2009	Clark et al.
7,609,967	B2	10/2009	Hochbaum et al.
7,613,377	B2	11/2009	Gonzales et al.
7,620,272	B2	11/2009	Hino et al.
7,620,287	B2	11/2009	Appenzeller et al.
7,641,398	B2	1/2010	O'Riorden et al.
7,668,430	B2	2/2010	McClellan et al.
7,668,433	B2	2/2010	Bayazit et al.
7,672,561	B1	3/2010	Keith et al.
7,676,135	B2	3/2010	Chen
7,697,811	B2	4/2010	Murano et al.
7,715,125	B2	5/2010	Willey
7,715,683	B2	5/2010	Kowalczyk et al.
7,734,138	B2	6/2010	Bloodworth et al.
7,740,409	B2	6/2010	Bolton et al.
7,743,495	B2	6/2010	Mori et al.

(56) **References Cited**

U.S. PATENT DOCUMENTS

7,751,674	B2	7/2010	Hill
7,751,675	B2	7/2010	Holmberg et al.
7,756,382	B2	7/2010	Saravanos et al.
7,760,984	B2	7/2010	Solheid et al.
7,764,858	B2	7/2010	Bayazit et al.
7,764,859	B2	7/2010	Krampotich et al.
7,769,266	B2	8/2010	Morris
7,805,044	B2	9/2010	Reagan et al.
7,809,235	B2	10/2010	Reagan et al.
7,822,310	B2	10/2010	Castonguay et al.
7,850,372	B2	12/2010	Nishimura et al.
7,853,112	B2	12/2010	Zimmel et al.
7,856,166	B2	12/2010	Biribuze et al.
7,914,332	B2	3/2011	Song et al.
7,942,589	B2	5/2011	Yazaki et al.
7,945,135	B2	5/2011	Cooke et al.
7,945,136	B2	5/2011	Cooke et al.
7,945,138	B2	5/2011	Hill et al.
7,970,250	B2	6/2011	Morris
8,014,171	B2	9/2011	Kelly et al.
8,014,646	B2	9/2011	Keith et al.
8,020,813	B1	9/2011	Clark et al.
8,059,932	B2	11/2011	Hill et al.
8,107,785	B2	1/2012	Berglund et al.
8,131,126	B2	3/2012	Kowalczyk et al.
8,206,058	B2	6/2012	Vrondran et al.
8,369,679	B2	2/2013	Wakileh et al.
8,391,666	B2	3/2013	Hetzer et al.
8,472,773	B2	6/2013	de Jong
8,491,331	B2	7/2013	Follingstad
8,537,477	B2	9/2013	Shioda
2001/0010741	A1	8/2001	Hizuka
2001/0029125	A1	10/2001	Morita et al.
2002/0010818	A1	1/2002	Wei et al.
2002/0012353	A1	1/2002	Gerszberg et al.
2002/0034290	A1	3/2002	Pershan
2002/0037139	A1	3/2002	Asao et al.
2002/0064364	A1	5/2002	Battey et al.
2002/0131730	A1	9/2002	Keeble et al.
2002/0136519	A1	9/2002	Tinucci et al.
2002/0141724	A1	10/2002	Ogawa et al.
2002/0150372	A1	10/2002	Schray
2002/0172467	A1	11/2002	Anderson et al.
2002/0181918	A1	12/2002	Spence et al.
2002/0181922	A1	12/2002	Xin et al.
2002/0191939	A1	12/2002	Daoud et al.
2002/0194596	A1	12/2002	Srivastava
2003/0007743	A1	1/2003	Asada
2003/0007767	A1	1/2003	Douglas et al.
2003/0021539	A1	1/2003	Kwon et al.
2003/0066998	A1	4/2003	Lee
2003/0086675	A1	5/2003	Wu et al.
2003/0095753	A1	5/2003	Wada et al.
2003/0147604	A1	8/2003	Tapia et al.
2003/0174996	A1	9/2003	Henschel et al.
2003/0180012	A1	9/2003	Deane et al.
2003/0183413	A1	10/2003	Kato
2003/0199201	A1	10/2003	Mullaney et al.
2003/0210882	A1	11/2003	Barthel et al.
2003/0223723	A1	12/2003	Massey et al.
2003/0223725	A1	12/2003	Laporte et al.
2003/0235387	A1	12/2003	Dufour
2004/0011750	A1	1/2004	Kim et al. 211/26
2004/0013389	A1	1/2004	Taylor
2004/0013390	A1	1/2004	Kim et al.
2004/0022494	A1	2/2004	Liddle et al.
2004/0067036	A1	4/2004	Clark et al.
2004/0074852	A1	4/2004	Knudsen et al.
2004/0086238	A1	5/2004	Finona et al.
2004/0086252	A1	5/2004	Smith et al.
2004/0120679	A1	6/2004	Vincent et al.
2004/0147159	A1	7/2004	Urban et al.
2004/0151465	A1	8/2004	Krampotich et al.
2004/0175090	A1	9/2004	Vastmans et al.
2004/0192115	A1	9/2004	Bugg
2004/0208459	A1	10/2004	Mizue et al.
2004/0228598	A1	11/2004	Allen et al.
2004/0240827	A1	12/2004	Daoud et al.
2004/0240882	A1	12/2004	Lipski et al.
2004/0264873	A1	12/2004	Smith et al.
2005/0002633	A1	1/2005	Solheid et al.
2005/0008131	A1	1/2005	Cook
2005/0026497	A1	2/2005	Holliday
2005/0036749	A1	2/2005	Vogel et al.
2005/0074990	A1	4/2005	Shearman et al.
2005/0076149	A1	4/2005	McKown et al.
2005/0083959	A1	4/2005	Binder
2005/0107086	A1	5/2005	Tell et al.
2005/0111809	A1	5/2005	Giraud et al.
2005/0111810	A1	5/2005	Giraud et al.
2005/0123261	A1	6/2005	Bellekens et al.
2005/0129379	A1	6/2005	Reagan et al.
2005/0175293	A1	8/2005	Byers et al.
2005/0201073	A1	9/2005	Pincu et al.
2005/0232566	A1	10/2005	Rapp et al.
2005/0233647	A1	10/2005	Denovich et al.
2005/0254757	A1	11/2005	Ferretti, III et al.
2005/0281526	A1	12/2005	Vongseng et al.
2005/0281527	A1	12/2005	Wilson et al.
2006/0007562	A1	1/2006	Willey et al.
2006/0018448	A1	1/2006	Stevens et al.
2006/0018622	A1	1/2006	Caveney
2006/0039290	A1	2/2006	Roden et al.
2006/0044774	A1	3/2006	Vasavda et al.
2006/0045458	A1	3/2006	Sasaki et al.
2006/0072606	A1	4/2006	Posthuma
2006/0077968	A1	4/2006	Pitsoulakis et al.
2006/0093303	A1	5/2006	Reagan et al.
2006/0110118	A1	5/2006	Escoto et al.
2006/0133759	A1	6/2006	Mullaney et al.
2006/0147172	A1	7/2006	Luther et al.
2006/0153517	A1	7/2006	Reagan et al.
2006/0160377	A1	7/2006	Huang
2006/0165365	A1	7/2006	Feustel et al.
2006/0165366	A1	7/2006	Feustel et al.
2006/0191700	A1	8/2006	Herzog et al.
2006/0193590	A1	8/2006	Puetz et al.
2006/0193591	A1	8/2006	Rapp et al.
2006/0198098	A1	9/2006	Clark et al.
2006/0215980	A1	9/2006	Bayazit et al.
2006/0228087	A1	10/2006	Bayazit et al.
2006/0269194	A1	11/2006	Luther et al.
2006/0269206	A1	11/2006	Zimmel
2006/0269208	A1	11/2006	Allen et al.
2006/0275008	A1	12/2006	Xin
2006/0275009	A1	12/2006	Ellison et al.
2006/0285812	A1	12/2006	Ferris et al.
2007/0003204	A1	1/2007	Makrides-Saravanos et al.
2007/0025070	A1	2/2007	Jiang et al.
2007/0031099	A1	2/2007	Herzog et al.
2007/0033629	A1	2/2007	McGranahan et al.
2007/0047894	A1	3/2007	Holmberg et al.
2007/0104447	A1	5/2007	Allen
2007/0127201	A1	6/2007	Mertesdorf et al.
2007/0131628	A1	6/2007	Mimlitch, III et al.
2007/0189692	A1	8/2007	Zimmel et al.
2007/0196071	A1	8/2007	Laursen et al.
2007/0221793	A1	9/2007	Kusuda et al.
2007/0237484	A1	10/2007	Reagan et al.
2007/0257159	A1	11/2007	Nelson et al.
2007/0274718	A1	11/2007	Bridges et al.
2008/0011514	A1	1/2008	Zheng et al.
2008/0025683	A1	1/2008	Murano
2008/0031585	A1	2/2008	Solheid et al.
2008/0063350	A1	3/2008	Trebesch et al.
2008/0068788	A1	3/2008	Ozawa et al.
2008/0069511	A1	3/2008	Blackwell, Jr. et al.
2008/0069512	A1	3/2008	Barnes et al.
2008/0080826	A1	4/2008	Leon et al.
2008/0080827	A1	4/2008	Leon et al.
2008/0080828	A1	4/2008	Leon et al.
2008/0085094	A1	4/2008	Krampotich
2008/0089656	A1	4/2008	Wagner et al.
2008/0095541	A1	4/2008	Dallesasse

(56) **References Cited**

U.S. PATENT DOCUMENTS

2008/0100440	A1	5/2008	Downie et al.
2008/0106871	A1	5/2008	James
2008/0112681	A1	5/2008	Battey et al.
2008/0118207	A1	5/2008	Yamamoto et al.
2008/0121423	A1	5/2008	Vogel et al.
2008/0124039	A1	5/2008	Gniadek et al.
2008/0131068	A1	6/2008	Mertesdorf et al.
2008/0145013	A1	6/2008	Escoto et al.
2008/0152294	A1	6/2008	Hirano et al.
2008/0166094	A1	7/2008	Bookbinder et al.
2008/0166131	A1	7/2008	Hudgins et al.
2008/0175550	A1	7/2008	Coburn et al.
2008/0175551	A1	7/2008	Smrha et al.
2008/0175552	A1*	7/2008	Smrha et al. 385/135
2008/0193091	A1	8/2008	Herbst
2008/0205823	A1	8/2008	Luther et al.
2008/0205844	A1	8/2008	Castonguay et al.
2008/0212928	A1	9/2008	Kowalczyk et al.
2008/0219632	A1	9/2008	Smith et al.
2008/0219634	A1	9/2008	Rapp et al.
2008/0236858	A1	10/2008	Quijano
2008/0247723	A1	10/2008	Herzog et al.
2008/0267573	A1	10/2008	Douglas et al.
2008/0285934	A1	11/2008	Standish et al.
2008/0292261	A1	11/2008	Kowalczyk et al.
2008/0296060	A1	12/2008	Hawley et al.
2008/0298763	A1	12/2008	Appenzeller et al.
2008/0304803	A1	12/2008	Krampotich et al.
2008/0310810	A1	12/2008	Gallagher
2009/0010607	A1	1/2009	Elisson et al.
2009/0016685	A1	1/2009	Hudgins et al.
2009/0022470	A1	1/2009	Krampotich
2009/0038845	A1	2/2009	Fransen et al.
2009/0060439	A1	3/2009	Cox et al.
2009/0060440	A1	3/2009	Wright et al.
2009/0067800	A1	3/2009	Vazquez et al.
2009/0074371	A1	3/2009	Bayazit et al.
2009/0080849	A1	3/2009	Hankins et al.
2009/0097813	A1	4/2009	Hill
2009/0136194	A1	5/2009	Barnes
2009/0136195	A1	5/2009	Smrha et al.
2009/0136196	A1	5/2009	Trebesch et al.
2009/0146342	A1	6/2009	Haney et al.
2009/0148117	A1	6/2009	Laurisch
2009/0166404	A1	7/2009	German et al.
2009/0169163	A1	7/2009	Abbott, III et al.
2009/0175588	A1	7/2009	Brandt et al.
2009/0180749	A1	7/2009	Douglas et al.
2009/0185782	A1	7/2009	Parikh et al.
2009/0191891	A1	7/2009	Ma et al.
2009/0194647	A1	8/2009	Keith
2009/0196563	A1	8/2009	Mullsteff et al.
2009/0202214	A1	8/2009	Holmberg et al.
2009/0207577	A1	8/2009	Fransen et al.
2009/0208178	A1	8/2009	Kowalczyk et al.
2009/0208210	A1	8/2009	Trojer et al.
2009/0214171	A1	8/2009	Coburn et al.
2009/0220200	A1	9/2009	Sheau Tung Wong et al.
2009/0220204	A1	9/2009	Ruiz
2009/0226142	A1	9/2009	Barnes et al.
2009/0238531	A1	9/2009	Holmberg et al.
2009/0245743	A1	10/2009	Cote et al.
2009/0252472	A1	10/2009	Solheid et al.
2009/0257726	A1	10/2009	Redmann et al.
2009/0257727	A1	10/2009	Laurisch et al.
2009/0257754	A1	10/2009	Theodoras, II et al.
2009/0263096	A1	10/2009	Solheid et al.
2009/0263122	A1	10/2009	Helkey et al.
2009/0267865	A1	10/2009	Miller et al.
2009/0269016	A1	10/2009	Korampally et al.
2009/0269018	A1	10/2009	Frohlich et al.
2009/0274429	A1	11/2009	Krampotich et al.
2009/0274430	A1	11/2009	Krampotich et al.
2009/0274432	A1	11/2009	Iwaya
2009/0290842	A1	11/2009	Bran de Leon et al.
2009/0297111	A1	12/2009	Reagan et al.
2009/0304342	A1	12/2009	Adomeit et al.
2009/0324189	A1	12/2009	Hill et al.
2010/0003000	A1	1/2010	Rapp et al.
2010/0012671	A1	1/2010	Vrondran et al.
2010/0054681	A1	3/2010	Biribuze et al.
2010/0054682	A1	3/2010	Cooke et al.
2010/0054685	A1	3/2010	Cooke et al.
2010/0054687	A1	3/2010	Ye et al.
2010/0061691	A1	3/2010	Murano et al.
2010/0061693	A1	3/2010	Bran de Leon et al.
2010/0074587	A1	3/2010	Loeffelholz et al.
2010/0080517	A1	4/2010	Cline et al.
2010/0086267	A1	4/2010	Cooke et al.
2010/0086274	A1	4/2010	Keith
2010/0111483	A1	5/2010	Reinhardt et al.
2010/0119201	A1	5/2010	Smrha et al.
2010/0142544	A1	6/2010	Chapel et al.
2010/0142910	A1	6/2010	Hill et al.
2010/0150518	A1	6/2010	Leon et al.
2010/0158467	A1	6/2010	Hou et al.
2010/0166377	A1	7/2010	Nair et al.
2010/0178022	A1	7/2010	Schroeder et al.
2010/0202745	A1	8/2010	Sokolowski et al.
2010/0220967	A1	9/2010	Cooke et al.
2010/0247051	A1	9/2010	Kowalczyk et al.
2010/0278499	A1	11/2010	Mures et al.
2010/0296790	A1	11/2010	Cooke et al.
2010/0310225	A1	12/2010	Anderson et al.
2010/0310226	A1	12/2010	Wakileh et al.
2010/0316334	A1	12/2010	Kewitsch
2010/0322582	A1	12/2010	Cooke et al.
2010/0322583	A1	12/2010	Cooke et al.
2010/0329624	A1	12/2010	Zhou et al.
2011/0069931	A1	3/2011	Cote et al.
2011/0073730	A1	3/2011	Kitchen
2011/0085774	A1	4/2011	Murphy et al.
2011/0085776	A1	4/2011	Biribuze et al.
2011/0097053	A1	4/2011	Smith et al.
2011/0097977	A1	4/2011	Bubnick et al.
2011/0186532	A1	8/2011	Wu
2011/0192631	A1	8/2011	Burek et al.
2011/0211799	A1	9/2011	Conner et al.
2011/0217016	A1	9/2011	Mullsteff
2011/0222821	A1	9/2011	Pitwon et al.
2011/0268404	A1	11/2011	Cote et al.
2011/0280537	A1	11/2011	Cowen et al.
2012/0051707	A1	3/2012	Barnes et al.
2012/0057838	A1	3/2012	Hill et al.
2012/0183263	A1	7/2012	Wu
2013/0077927	A1	3/2013	O'Connor

FOREIGN PATENT DOCUMENTS

CH	688705	A5	1/1998
DE	8711970	U1	10/1987
DE	3726718	A1	2/1989
DE	3726719	A1	2/1989
DE	4030301	A1	3/1992
DE	4231181	C1	8/1993
DE	20115940	U1	1/2002
DE	10338848	A1	3/2005
DE	202005009932	U1	11/2005
DE	102007024476	A1	11/2008
EP	0105597	A2	4/1984
EP	0250900	A2	1/1988
EP	0408266	A2	1/1991
EP	0474091	A1	8/1991
EP	0468671	A1	1/1992
EP	0490698	A1	6/1992
EP	0529830	A1	3/1993
EP	0544004	A1	6/1993
EP	0547778	A1	6/1993
EP	0581527	A1	2/1994
EP	0620462	A1	10/1994
EP	0693699	A1	1/1996
EP	0720322	A2	7/1996
EP	0940700	A2	9/1999
EP	0949522	A2	10/1999

(56) **References Cited**

FOREIGN PATENT DOCUMENTS

EP	1041417	A2	10/2000
EP	1056177	A1	11/2000
EP	1065542	A1	1/2001
EP	1203974	A2	5/2002
EP	1289319	A2	3/2003
EP	1316829	A2	6/2003
EP	1367308	A1	12/2003
EP	1621907	A1	2/2006
EP	1777563	A1	4/2007
FR	2378378	A1	8/1978
GB	2241591	A	9/1991
GB	2277812	A	11/1994
GB	2367379	A	4/2002
JP	3172806	A	7/1991
JP	5045541	A	2/1993
JP	06018749	A	1/1994
JP	7308011	A	11/1995
JP	8007308	A	1/1996
JP	8248235	A	9/1996
JP	8248237	A	9/1996
JP	3487946	A	10/1996
JP	8254620	A	10/1996
JP	3279474	A	10/1997
JP	9258033	A	10/1997
JP	9258055	A	10/1997
JP	2771870	B2	7/1998
JP	3448448	A	8/1998
JP	10227919	A	8/1998
JP	3478944	A	12/1998
JP	10332945	A	12/1998
JP	10339817	A	12/1998
JP	11023858	A	1/1999
JP	2000098138	A	4/2000
JP	2000098139	A	4/2000
JP	2000241631	A	9/2000
JP	2001004849	A	1/2001
JP	3160322	B2	4/2001
JP	2001133636	A	5/2001
JP	3173962	B2	6/2001
JP	3176906	B2	6/2001
JP	2001154030	A	6/2001
JP	2001159714	A	6/2001
JP	2002022974	A	1/2002
JP	2002169035	A	6/2002
JP	3312893	B2	8/2002
JP	2002305389	A	10/2002
JP	3344701	B2	11/2002
JP	2003029054	A	1/2003
JP	3403573	B2	5/2003
JP	2003169026	A	6/2003
JP	2003215353	A	7/2003
JP	2003344701	A	12/2003
JP	3516765	B2	4/2004
JP	2004144808	A	5/2004
JP	2004514931	A	5/2004
JP	3542939	B2	7/2004
JP	2004246147	A	9/2004
JP	2004361652	A	12/2004
JP	2004361893	A	12/2004
JP	3107704	U	2/2005
JP	2005055748	A	3/2005
JP	2005062569	A	3/2005
JP	2005084241	A	3/2005
JP	2005148327	A	6/2005
JP	2005257937	A	9/2005
JP	3763645	B2	4/2006
JP	3778021	B2	5/2006
JP	2006126513	A	5/2006
JP	2006126516	A	5/2006
JP	3794540	B2	7/2006
JP	2006227041	A1	8/2006
JP	3833638	B2	10/2006
JP	2006292924	A	10/2006
JP	3841344	B2	11/2006
JP	3847533	B2	11/2006
JP	200747336	A	2/2007
JP	3896035	B2	3/2007
JP	2007067458	A1	3/2007
JP	3934052	B2	6/2007
JP	3964191	B2	8/2007
JP	3989853	B2	10/2007
JP	4026244	B2	12/2007
JP	4029494	B2	1/2008
JP	4065223	B2	3/2008
JP	4093475	B2	6/2008
JP	4105696	B2	6/2008
JP	4112437	B2	7/2008
JP	4118862	B2	7/2008
JP	2008176118	A1	7/2008
JP	2008180817	A1	8/2008
JP	4184329	B2	11/2008
JP	2008542822	T	11/2008
JP	2009503582	T	1/2009
WO	9105281	A1	4/1991
WO	9326070	A1	12/1993
WO	9520175	A1	7/1995
WO	9636896	A1	11/1996
WO	9712268	A1	4/1997
WO	9736197	A1	10/1997
WO	9744605	A1	11/1997
WO	9825416	A1	6/1998
WO	9927404	A1	6/1999
WO	0005611	A2	2/2000
WO	0127660	A2	4/2001
WO	0242818	A1	5/2002
WO	03009527	A2	1/2003
WO	2004052066	A1	6/2004
WO	2006/127400	A2	11/2006
WO	2007050515	A1	5/2007
WO	2007079074	A2	7/2007
WO	2007149215	A2	12/2007
WO	2008063054	A2	5/2008
WO	2008113054	A2	9/2008
WO	2008157248	A1	12/2008
WO	2009120280	A2	10/2009
WO	2010080745	A1	7/2010
WO	2011011510	A2	1/2011

OTHER PUBLICATIONS

Non-Final Office Action for U.S. Appl. No. 12/952,912 mailed Dec. 28, 2012, 9 pages.

Non-Final Office Action for U.S. Appl. No. 12/953,118 mailed Jan. 7, 2013, 9 pages.

Annex to Form PCT/ISA/2006, Communication Relating to the Results of the Partial International Search, for PCT/US2009/004549 mailed Feb. 10, 2010, 2 pages.

Annex to Form PCT/ISA/206, Communication Relating to the Results of the Partial International Search, for PCT/US2009/004548 mailed Jan. 19, 2010, 2 pages.

Corning Cable Systems, "Corning Cable Systems Products for BellSouth High Density Shelves," Jun. 2000, 2 pages.

Corning Cable Systems, "Corning Cable Systems Quick Reference Guide for Verizon FTTP FDH Products," Jun. 2005, 4 pages.

Conner, M. "Passive Optical Design for RFOG and Beyond," Braodband Properties, Apr. 2009, pp. 78-81.

Corning Evolant, "Eclipse Hardware Family," Nov. 2009, 1 page.

Corning Evolant, "Enhanced Management Frame," Dec. 2009, 1 page.

Corning Evolant, "Enhanced Management Frame (EMF)," Specification Sheet, Nov. 2009, 24 pages.

Corning Cable Systems, "Evolant Solutions for Evolving Networks: Fiber Optic Hardware," Oct. 2002, 2 pages.

Corning Cable Systems, "Fiber Optic Hardware with Factory-Installed Pigtails: Features and Benefits," Nov. 2010, 12 pages.

Corning Cable Systems, "FiberManager System 1- and 3-Position Compact Shelves," Jan. 2003, 4 pages.

Corning Cable Systems, "FiberManager System Frame and Components," Jan. 2003, 12 pages.

Corning Cable Systems, "High Density Frame," Jul. 2001, 2 pages.

Corning Cable Systems, "High Density Frame (HDF) Connector-Splice Shelves and Housings," May 2003, 4 pages.

(56) **References Cited**

OTHER PUBLICATIONS

International Search Report for PCT/US10/35529 mailed Jul. 23, 2010, 2 pages.
International Search Report for PCT/US10/35563 mailed Jul. 23, 2012, 1 page.
International Search Report for PCT/US2008/002514 mailed Aug. 8, 2008, 2 pages.
International Search Report for PCT/US2008/010317 mailed Mar. 4, 2008, 2 pages.
International Search Report for PCT/US2009/001692 mailed Nov. 24, 2009, 5 pages.
International Search Report for PCT/US2010/024888 mailed Jun. 23, 2010, 5 pages.
International Search Report for PCT/US2010/027402 mailed Jun. 16, 2010, 2 pages.
Corning Cable Systems, "MTX Frames and Accessories," Feb. 2006, 4 pages.
Panduit, "Lock-in LC Duplex Clip," Accessed Mar. 22, 2012, 1 page.
International Search Report for PCT/US06/49351 mailed Apr. 25, 2008, 1 page.
International Search Report for PCT/US09/57069 mailed Mar. 24, 2010, 2 pages.
International Search Report for PCT/US2009/057244 mailed Nov. 9, 2009 3 pages.
International Search Report for PCTUS2009004548 mailed Mar. 19, 2010, 5 pages.
International Search Report for PCTUS2009004549 mailed Apr. 20, 2010, 6 pages.
Siecor, "Single Shelf HDF with Slack Storage and Heat Shield (HH1-CSH-1238-1V-BS)," Jan. 1998, 12 pages.
Corning Cable Systems, "Mass Termination Xchange (MTX) Frame System Equipment Office Planning and Application Guide," SRP003-664, Issue 1, Mar. 2005, 57 pages.
Corning Cable Systems, "Mass Termination Xchange (MTX) Equipment Patch Cord Interbay Vertical Channel," SRP003-684, Issue 1, Mar. 2005, 8 pages.
Corning Cable Systems, "High Density Frame (HDF) Installation," SRP003-355, Issue 4, Sep. 2002, 18 pages.
Written Opinion for PCT/US2010/023901 mailed Aug. 25, 2011, 8 pages.
Advisory Action for U.S. Appl. No. 12/221,117 mailed Aug. 24, 2011, 3 pages.
Examiner's Answer to Appeal Brief for U.S. Appl. No. 12/221,117 mailed Mar. 29, 2012, 16 pages.
Final Office Action for U.S. Appl. No. 12/221,117 mailed Feb. 19, 2010, 7 pages.
Final Office Action for U.S. Appl. No. 12/221,117 mailed Jun. 10, 2011, 8 pages.
Non-final Office Action for U.S. Appl. No. 12/221,117 mailed Jul. 14, 2010, 7 pages.
Non-final Office Action for U.S. Appl. No. 12/221,117 mailed Jun. 9, 2009, 5 pages.
Non-final Office Action for U.S. Appl. No. 12/221,117 mailed Dec. 21, 2010, 7 pages.
Advisory Action for U.S. Appl. No. 12/394,483 mailed Feb. 16, 2012, 3 pages.
Final Office Action for U.S. Appl. No. 12/394,483 mailed Dec. 6, 2011, 14 pages.
Non-final Office Action for U.S. Appl. No. 12/394,483 mailed Jun. 17, 2011, 11 pages.
Advisory Action for U.S. Appl. No. 12/950,234 mailed Dec. 21, 2011, 3 pages.
Non-final Office Action for U.S. Appl. No. 12/950,234 mailed Jun. 17, 2011, 7 pages.
Non-final Office Action for U.S. Appl. No. 12/950,234 mailed Mar. 12, 2012, 10 pages.
Final Office Action for U.S. Appl. No. 12/950,234 mailed Oct. 14, 2011, 10 pages.
Advisory Action mailed May 12, 2011, for U.S. Appl. No. 12/323,423, 3 pages.
Final Rejection mailed Mar. 3, 2011, for U.S. Appl. No. 12/323,423, 17 pages.
Non-Final Rejection mailed Aug. 5, 2011, for U.S. Appl. No. 12/323,423, 13 pages.
Unknown, Author, "QuickNet SFQ Series MTP Fiber Optic Cassettes," Panduit Specification Sheet, Jan. 2009, 2 pages.
Unknown Author, "Cellular Specialties introduces the first simulated in-building location-based tracking solution," smart-grid.tmenet.com/news, Sep. 14, 2009, 2 pages.
Unknown Author, "CDMA Co-Pilot Transmitter," Cellular Specialties, Inc., Aug. 2009, 2 pages.
International Search Report for PCT/US2010/038986 mailed Aug. 18, 2010, 1 page.
International Search Report for PCT/US2010/023901 mailed Jun. 11, 2010, 3 pages.
Notice of Allowance for U.S. Appl. No. 12/576,769 mailed May 31, 2012, 9 pages.
Non-final Office Action for U.S. Appl. No. 12/576,806 mailed Dec. 13, 2011, 6 pages.
Notice of Allowance for U.S. Appl. No. 12/576,806 mailed Apr. 18, 2012, 5 pages.
Non-Final Office Action for U.S. Appl. No. 12/707,889 mailed Jan. 2, 2013, 7 pages.
Non-Final Office Action for U.S. Appl. No. 12/953,536 mailed Jan. 2, 2013, 20 pages.
Final Office Action for U.S. Appl. No. 12/394,114 mailed Oct. 25, 2012, 8 pages.
Non-final Office Action for U.S. Appl. No. 12/732,487 mailed Sep. 19, 2012, 22 pages.
Non-final Office Action for U.S. Appl. No. 12/818,986 mailed Feb. 3, 2012, 12 pages.
Final Office Action for U.S. Appl. No. 12/818,986 mailed Oct. 18, 2012, 13 pages.
Non-final Office Action for U.S. Appl. No. 12/952,960 mailed Oct. 4, 2012, 11 pages.
Non-final Office Action for U.S. Appl. No. 12/953,134 mailed Sep. 25, 2012, 8 pages.
Non-final Office Action for U.S. Appl. No. 12/915,682 mailed Oct. 24, 2012, 8 pages.
Non-final Office Action for U.S. Appl. No. 12/946,139 mailed Jul. 26, 2012, 12 pages.
Final Office Action for U.S. Appl. No. 12/946,139 mailed Feb. 15, 2013, 17 pages.
Non-final Office Action for U.S. Appl. No. 12/751,884 mailed Feb. 15, 2013, 5 pages.
Non-final Office Action for U.S. Appl. No. 12/394,114 mailed Feb. 27, 2013, 8 pages.
Non-final Office Action for U.S. Appl. No. 12/819,065 mailed Mar. 4, 2013, 7 pages.
Final Office Action for U.S. Appl. No. 12/952,960 mailed Mar. 7, 2013, 13 pages.
Notice of Allowance for U.S. Appl. No. 12/732,487 mailed Mar. 19, 2013, 11 pages.
Non-final Office Action for U.S. Appl. No. 12/953,134 mailed Mar. 21, 2013, 9 pages.
Final Office Action for U.S. Appl. No. 12/641,617 mailed May 10, 2013, 21 pages.
European Search Report for patent application 10790017.7 mailed Nov. 8, 2012, 7 pages.
Examination Report for European patent application 09789090.9-2216 mailed Aug. 29, 2011, 4 pages.
Examination Report for European patent application 09789090.9-2216 mailed Mar. 30, 2012, 6 pages.
Written Opinion of the International Searching Authority for International patent application PCT/US2009004548, mailed Apr. 5, 2011, 6 pages.
European Search Report for European patent application 09789090.9-2217 mailed Jan. 24, 2013, 5 pages.
Notice of Allowance for U.S. Appl. No. 13/090,621 mailed Apr. 22, 2013, 8 pages.
Final Office Action for U.S. Appl. No. 12/953,039 mailed May 1, 2013, 8 pages.

(56) **References Cited**

OTHER PUBLICATIONS

Final Office Action for U.S. Appl. No. 12/953,118 mailed May 3, 2013, 11 pages.
Final Office Action for U.S. Appl. No. 12/915,682 mailed Apr. 18, 2013, 9 pages.
Advisory Action for U.S. Appl. No. 12/952,960 mailed May 15, 2013, 2 pages.
Non-final Office Action for U.S. Appl. No. 12/952,960 mailed Jun. 20, 2013, 13 pages.
Non-final Office Action for U.S. Appl. No. 12/953,536 mailed Jun. 6, 2013, 21 pages.
Non-final Office Action for U.S. Appl. No. 11/820,300 mailed Apr. 25, 2012, 10 pages.
Final Office Action for U.S. Appl. No. 12/871,052 mailed Jul. 1, 2013, 12 pages.
Non-final Office Action for U.S. Appl. No. 12/940,699 mailed Jun. 26, 2013, 9 pages.
Notice of Allowance for U.S. Appl. No. 13/090,621 mailed Jun. 25, 2013, 8 pages.
Non-Final Rejection mailed Sep. 7, 2010, for U.S. Appl. No. 12/323,423, 18 pages.
Notice of Allowance for U.S. Appl. No. 12/323,423 mailed Jan. 24, 2012, 8 pages.
Examiner's Answer mailed Mar. 4, 2011, for U.S. Appl. No. 12/323,415, 11 pages.
Final Rejection mailed Jun. 25, 2010, for U.S. Appl. No. 12/323,415, 10 pages.
Non-Final Rejection mailed Aug. 5, 2011, for U.S. Appl. No. 12/323,415, 41 pages.
Non-final Office Action for U.S. Appl. No. 12/323,415 mailed Apr. 23, 2012, 11 pages.
Non-Final Rejection mailed Dec. 10, 2009, for U.S. Appl. No. 12/323,415, 7 pages.
Examiner's Answer to Appeal Brief for U.S. Appl. No. 11/320,062 mailed Dec. 8, 2011, 8 pages.
Final Office Action for U.S. Appl. No. 11/320,062 mailed Mar. 8, 2011, 8 pages.
Non-final Office Action for U.S. Appl. No. 11/320,062 mailed Jan. 15, 2010, 11 pages.
Non-final Office Action for U.S. Appl. No. 12/320,062 mailed Sep. 30, 2010, 7 pages.
Final Office Action for U.S. Appl. No. 11/439,086 mailed Feb. 4, 2010, 14 pages.
Non-final Office Action for U.S. Appl. No. 11/439,086 mailed May 3, 2010, 11 pages.
Non-final Office Action for U.S. Appl. No. 11/439,086 mailed Sep. 21, 2009, 10 pages.
Final Office Action for U.S. Appl. No. 12/079,481 mailed Mar. 18, 2010, 10 pages.
Non-final Office Action for U.S. Appl. No. 12/079,481 mailed Dec. 26, 2008, 9 pages.
Non-final Office Action for U.S. Appl. No. 12/079,481 mailed Sep. 16, 2009, 10 pages.
Notice of Allowance for U.S. Appl. No. 12/079,481 mailed Jun. 3, 2010, 6 pages.
Notice of Allowance for U.S. Appl. No. 12/079,481 mailed Oct. 4, 2010, 4 pages.
Final Office Action for U.S. Appl. No. 12/394,114 mailed Dec. 22, 2011, 8 pages.
Non-final Office Action for U.S. Appl. No. 12/394,114 mailed Mar. 16, 2012, 8 pages.
Non-final Office Action for U.S. Appl. No. 12/394,114 mailed Sep. 1, 2011, 7 pages.
Non-final Office Action for U.S. Appl. No. 12/323,373 mailed May 3, 2012, 7 pages.
Non-final Office Action for U.S. Appl. No. 11/809,474 mailed Apr. 8, 2008, 13 pages.
Non-final Office Action for U.S. Appl. No. 11/809,474 mailed Nov. 13, 2008, 10 pages.
Notice of Allowance for U.S. Appl. No. 11/809,474 mailed Jul. 6, 2009, 6 pages.
Final Office Action for U.S. Appl. No. 11/320,031 mailed Mar. 8, 2011, 8 pages.
Non-final Office Action for U.S. Appl. No. 11/320,031 mailed Jan. 5, 2010, 16 pages.
Non-final Office Action for U.S. Appl. No. 11/320,031 mailed Sep. 30, 2010, 7 pages.
Notice of Allowance for U.S. Appl. No. 11/320,031 mailed Nov. 15, 2011, 7 pages.
Non-final Office Action for U.S. Appl. No. 12/157,622 mailed Mar. 31, 2009, 9 pages.
Non-final Office Action for U.S. Appl. No. 12/157,622 mailed Oct. 15, 2009, 9 pages.
Notice of Allowance for U.S. Appl. No. 12/157,622 mailed Apr. 22, 2010, 4 pages.
Non-final Office Action for U.S. Appl. No. 12/323,395 mailed Dec. 8, 2011, 7 pages.
Non-final Office Action for U.S. Appl. No. 12/415,454 mailed Mar. 2, 2012, 5 pages.
Non-final Office Action for U.S. Appl. No. 12/415,454 mailed Sep. 6, 2011, 7 pages.
Notice of Allowance for U.S. Appl. No. 12/415,454 mailed Jan. 13, 2012, 5 pages.
Non-final Office Action for U.S. Appl. No. 12/576,769 mailed Feb. 2, 2012, 23 pages.
Notice of Allowance for U.S. Appl. No. 12/415,454 mailed Jun. 19, 2012, 5 pages.
International Search Report for PCT/US2009/066779 mailed Aug. 27, 2010, 3 pages.
"MPO Fiber Optic Rack Panels now available from L-com Connectivity Products," article dated Jun. 4, 2007, 16 pages, http://www.l-com.com/content/Article.aspx?Type=P&ID=438.
"19" Rack Panel with 16 MPO Fiber Optic Couplers—1U high, product page, accessed Oct. 23, 2012, 2 pages, http://www.l-com.com/item.aspx?id=9767#.UlbgG8XXay5.
"Drawing for L-com 1U Panel with 16 MTP couplers," May 15, 2007, 1 page, http://www.l-com.com/multimedia/eng_drawings/PR17516MTP.pdf.
"RapidNet Fibre MTP VHD Cassette," Brochure, Date Unknown, 1 page, http://www.hellermanntyton.se/documents/5000/576_fiber_1U.pdf.
"MPO for Gigabit Ethernet/FAS-NET MTP Solution," Brochure, Date Unknown, 11 pages, http://www.infinique.com/upload/13182286190.pdf.
"Hubbell OptiChannel High Density 144 Port 1U Fiber Enclosure," Brochure, Date Unknown, 2 pages, http://www.hubbell-premise.com/literature/PLDF010.pdf.
Non-final Office Action for U.S. Appl. No. 12/771,473 mailed Oct. 4, 2012, 6 pages.
Non-final Office Action for U.S. Appl. No. 12/819,081 mailed Aug. 21, 2012, 12 pages.
Notice of Allowance for U.S. Appl. No. 12/417,325 mailed Aug. 22, 2012, 7 pages.
Notice of Panel Decision for Pre-Appeal Brief for U.S. Appl. No. 12/417,325 mailed Aug. 8, 2012, 2 pages.
Advisory Action for U.S. Appl. No. 12/417,325 mailed Jun. 29, 2012, 3 pages.
Advisory Action for U.S. Appl. No. 12/417,325 mailed Jun. 12, 2012, 3 pages.
Final Office Action for U.S. Appl. No. 12/417,325 mailed Apr. 16, 2012, 6 pages.
Final Office Action for U.S. Appl. No. 12/417,325 mailed Feb. 7, 2012, 7 pages.
Non-final Office Action for U.S. Appl. No. 12/417,325 mailed Jun. 15, 2011, 6 pages.
Notice of Allowance for U.S. Appl. No. 12/487,929 mailed Sep. 12, 2012, 4 pages.
Notice of Allowance for U.S. Appl. No. 12/487,929 mailed Jun. 13, 2012, 8 pages.
Advisory Action for U.S. Appl. No. 12/487,929 mailed Apr. 17, 2012, 3 pages.

(56) **References Cited**

OTHER PUBLICATIONS

Final Office Action for U.S. Appl. No. 12/487,929 mailed Feb. 14, 2012, 6 pages.
Final Office Action for U.S. Appl. No. 12/487,929 mailed Dec. 5, 2011, 7 pages.
Non-final Office Action for U.S. Appl. No. 12/487,929 mailed May 23, 2011, 7 pages.
Notice of Allowance for U.S. Appl. No. 12/415,253 mailed Mar. 11, 2011, 7 pages.
Non-final Office Action for U.S. Appl. No. 12/415,253 mailed Jul. 12, 2010, 11 pages.
Final Office Action for U.S. Appl. No. 12/415,253 mailed Apr. 16, 2010, 9 pages.
Non-final Office Action for U.S. Appl. No. 12/415,253 mailed Sep. 30, 2009, 8 pages.
Non-final Office Action for U.S. Appl. No. 12/641,617 mailed Oct. 5, 2012, 21 pages.
Final Office Action for U.S. Appl. No. 12/630,938 mailed Jun. 1, 2012, 18 pages.
Non-final Office Action for U.S. Appl. No. 12/630,938 mailed Dec. 19, 2011, 15 pages.
Non-final Office Action for U.S. Appl. No. 12/751,884 mailed Jul. 2, 2012, 9 pages.
Non-final Office Action for U.S. Appl. No. 12/871,052 mailed Aug. 13, 2012, 8 pages.
Final Office Action for U.S. Appl. No. 12/952,912 mailed Aug. 30, 2013, 15 pages.
Advisory Action for U.S. Appl. No. 12/771,473 mailed Oct. 2, 2013, 3 pages.
Notice of Allowance for U.S. Appl. No. 12/641,617 mailed Sep. 4, 2013, 9 pages.
Notice of Allowance for U.S. Appl. No. 12/871,052 mailed Sep. 18, 2013, 9 pages.
Non-final Office Action for U.S. Appl. No. 12/953,039 mailed Sep. 12, 2013, 8 pages.
Non-final Office Action for U.S. Appl. No. 12/946,139 mailed Oct. 2, 2013, 18 pages.
Final Office Action for U.S. Appl. No. 12/394,114 mailed Oct. 4, 2013, 10 pages.
Non-final Office Action for U.S. Appl. No. 12/818,986 mailed Oct. 4, 2013, 19 pages.
Advisory Action for U.S. Appl. No. 12/953,134 mailed Nov. 4, 2013, 3 pages.
Final Office Action for U.S. Appl. No. 12/952,960 mailed Oct. 29, 2013, 8 pages.
Notice of Allowance for U.S. Appl. No. 13/292,130 mailed Oct. 18, 2013, 9 pages.
Non-final Office Action for U.S. Appl. No. 13/901,074 mailed Oct. 9, 2013, 6 pages.
Non-final Office Action for U.S. Appl. No. 12/956,446 mailed Sep. 6, 2013, 10 pages.
International Search Report and Written Opinion for PCT/US2011/035683 mailed Sep. 8, 2011, 15 pages.
International Search Report and Written Opinion for PCT/US2010/039218 mailed Oct. 27, 2010, 13 pages.
International Search Report and Written Opinion for PCT/US2011/035684 mailed Jul. 1, 2011, 11 pages.
International Search Report and Written Opinion for PCT/US11/61754 mailed Mar. 26, 2012, 9 pages.
First Office Action for Chinese patent application 201080032453.2 issued Mar. 26, 2013, 6 pages.
Chinese Search Report for Chinese patent application 201080032453.2 mailed May 15, 2013, 2 pages.
First Office Action for Chinese patent application 201080031621.6 mailed Sep. 26, 2013, 9 pages.
Chinese Search Report for Chinese patent application 201080031621.6 mailed Sep. 13, 2013, 2 pages.
Ramdas, "Modern File Systems and Storage," Proceedings of the 2nd International SANE Conference, May 22-25, 2000, MECC, Maastricht, The Netherlands, Copyright Rodney R. Ramdas, 10 pages.
Author Unknown, "144 Fiber Patch Panel 1U," Technical Data, ADTEK Group Limited, 2009, 2 pages.
Non-final Office Action for U.S. Appl. No. 13/603,894 mailed Oct. 3, 2013, 9 pages.
Advisory Action for U.S. Appl. No. 12/394,114 mailed Jan. 2, 2014, 3 pages.
Notice of Allowance for U.S. Appl. No. 12/871,052 mailed Dec. 24, 2013, 9 pages.
Final Office Action for U.S. Appl. No. 12/953,039 mailed Dec. 27, 2013, 10 pages.
Advisory Action for U.S. Appl. No. 12/952,960 mailed Jan. 8, 2014, 3 pages.
Advisory Action for U.S. Appl. No. 12/952,912 mailed Nov. 26, 2013, 3 pages.
Examiner's Answer to the Appeal Brief for U.S. Appl. No. 12/953,118 mailed Dec. 3, 2013, 6 pages.
Non-final Office Action for U.S. Appl. No. 13/597,549 mailed Jan. 14, 2014, 9 pages.
Final Office Action for U.S. Appl. No. 12/732,487 mailed Dec. 6, 2013, 24 pages.
Final Office Action for U.S. Appl. No. 12/956,446 mailed Dec. 23, 2013, 12 pages.
Non-final Office Action for U.S. Appl. No. 12/953,536 mailed Dec. 17, 2013, 21 pages.
Non-final Office Action for U.S. Appl. No. 12/819,065 mailed Dec. 3, 2013, 8 pages.
International Search Report and Written Opinion for PCT/US2011/062353 mailed Apr. 10, 2012, 15 pages.
Non-final Office Action for U.S. Appl. No. 12/956,475 mailed Oct. 4, 2012, 7 pages.
Non-final Office Action for U.S. Appl. No. 13/302,067 mailed Jun. 7, 2013, 13 pages.
Final Office Action for U.S. Appl. No. 12/771,473 mailed Jul. 19, 2013, 7 pages.
Notice of Allowance for U.S. Appl. No. 12/751,884 mailed Jul. 17, 2013, 8 pages.
Advisory Action for U.S. Appl. No. 12/641,617 mailed Jul. 29, 2013, 3 pages.
Final Office Action for U.S. Appl. No. 12/953,134 mailed Aug. 23, 2013, 11 pages.
Ex parte Quayle Action for U.S. Appl. No. 12/953,164 mailed Aug. 16, 2013, 5 pages.
Non-final Office Action for U.S. Appl. No. 12/732,487 mailed Jul. 17, 2013, 22 pages.
Non-final Office Action and Interview Summary for U.S. Appl. No. 12/707,889 mailed Aug. 8, 2013, 15 pages.
Advisory Action for U.S. Appl. No. 12/953,039 mailed Jul. 12, 2013, 3 pages.
Advisory Action for U.S. Appl. No. 12/953,118 mailed Jul. 12, 2013, 3 pages.
Notice of Allowance for U.S. Appl. No. 13/292,130 mailed Feb. 14, 2014, 7 pages.
Final Office Action for U.S. Appl. No. 12/707,889 mailed Feb. 11, 2014, 17 pages.
Non-final Office Action for U.S. Appl. No. 12/940,699 mailed Feb. 3, 2014, 10 pages.
Notice of Allowance for U.S. Appl. No. 12/952,960 mailed Feb. 13, 2014, 7 pages.
Notice of Allowance and Applicant-Initiated Interview Summary for U.S. Appl. No. 12/771,473 mailed Feb. 27, 2014, 8 pages.
Non-final Office Action for U.S. Appl. No. 13/688,675 mailed Jan. 31, 2014, 13 pages.
Non-final Office Action for U.S. Appl. No. 13/663,975 mailed Jan. 31, 2014, 18 pages.
Non-final Office Action for U.S. Appl. No. 12/394,114 mailed Mar. 21, 2014, 9 pages.

(56) **References Cited**

OTHER PUBLICATIONS

Non-final Office Action for U.S. Appl. No. 12/953,101 mailed Apr. 3, 2014, 9 pages.
Advisory Action for U.S. Appl. No. 12/953,039 mailed Mar. 6, 2014, 3 pages.
Advisory Action for U.S. Appl. No. 12/956,446 mailed Mar. 20, 2014, 3 pages.
Final Office Action for U.S. Appl. No. 13/603,894 mailed Mar. 20, 2014, 15 pages.
Final Office Action for U.S. Appl. No. 12/947,883 mailed Mar. 31, 2014, 13 pages.
International Preliminary Report on Patentability for PCT/US2012/052958 mailed Mar. 13, 2014, 12 pages.
Non-final Office Action for U.S. Appl. No. 13/621,958 mailed Feb. 13, 2014, 10 pages.
Non-final Office Action for U.S. Appl. No. 13/649,417 mailed Feb. 13, 2014, 10 pages.
Non-final Office Action for U.S. Appl. No. 12/953,003 mailed Apr. 14, 2014, 13 pages.
Non-final Office Action for U.S. Appl. No. 12/953,039 mailed Apr. 15, 2014, 8 pages.
Final Office Action for U.S. Appl. No. 12/946,139 mailed Apr. 22, 2014, 18 pages.
Final Office Action for U.S. Appl. No. 13/597,549 mailed Apr. 24, 2014, 10 pages.
Final Office Action for U.S. Appl. No. 13/901,074 mailed May 9, 2014, 7 pages.

* cited by examiner

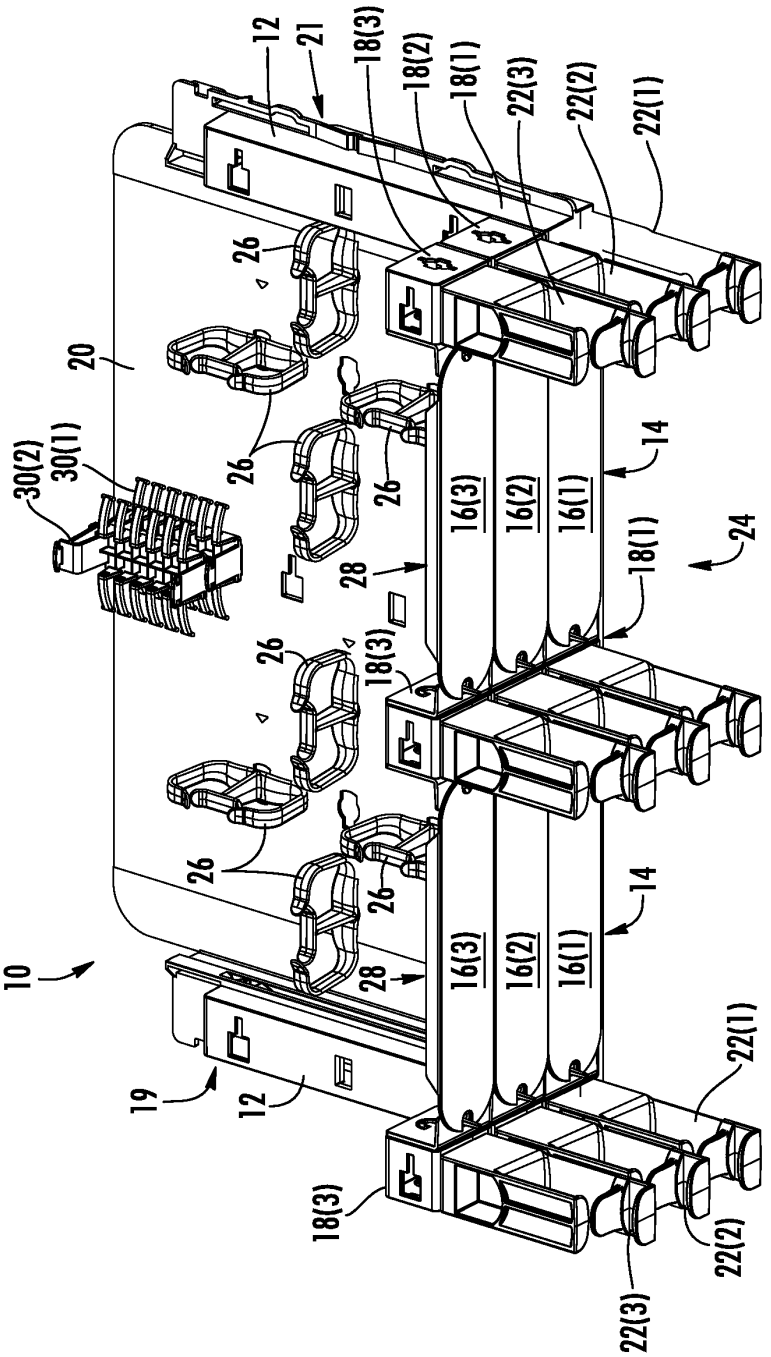
10
12
21
18(3)
18(2)
18(1)
22(3)
22(2)
22(1)
26
20
30(2)
30(1)
28
16(3)
16(2)
16(1)
14
24
19

FIG. 1A

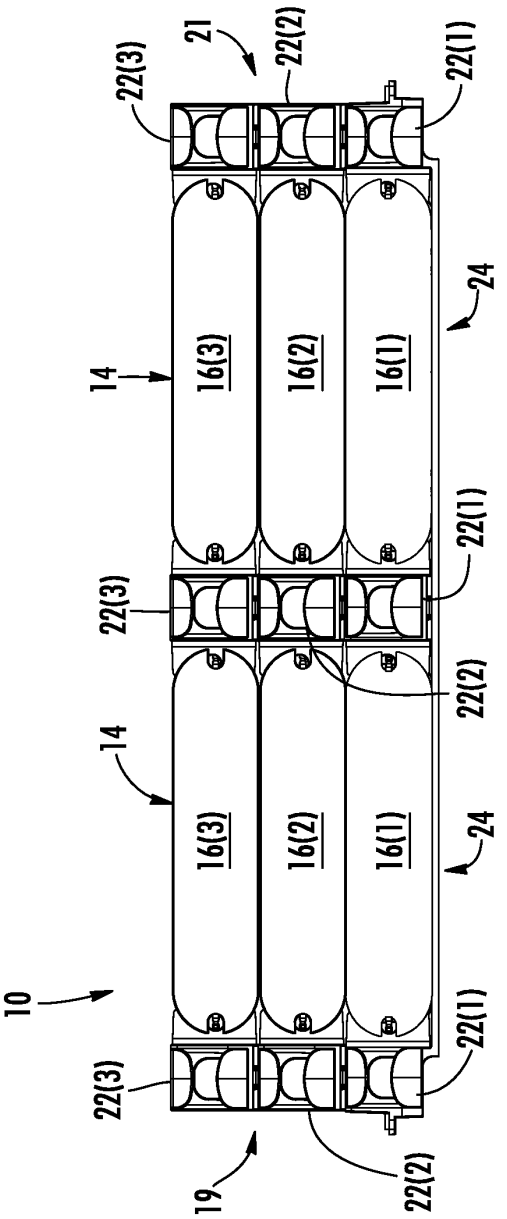
10
14
14
16(3)
16(2)
16(1)
16(3)
16(2)
16(1)
22(3)
22(3)
22(3)
22(2)
22(2)
22(2)
22(1)
22(1)
22(1)
21
19
24
24

FIG. 1B

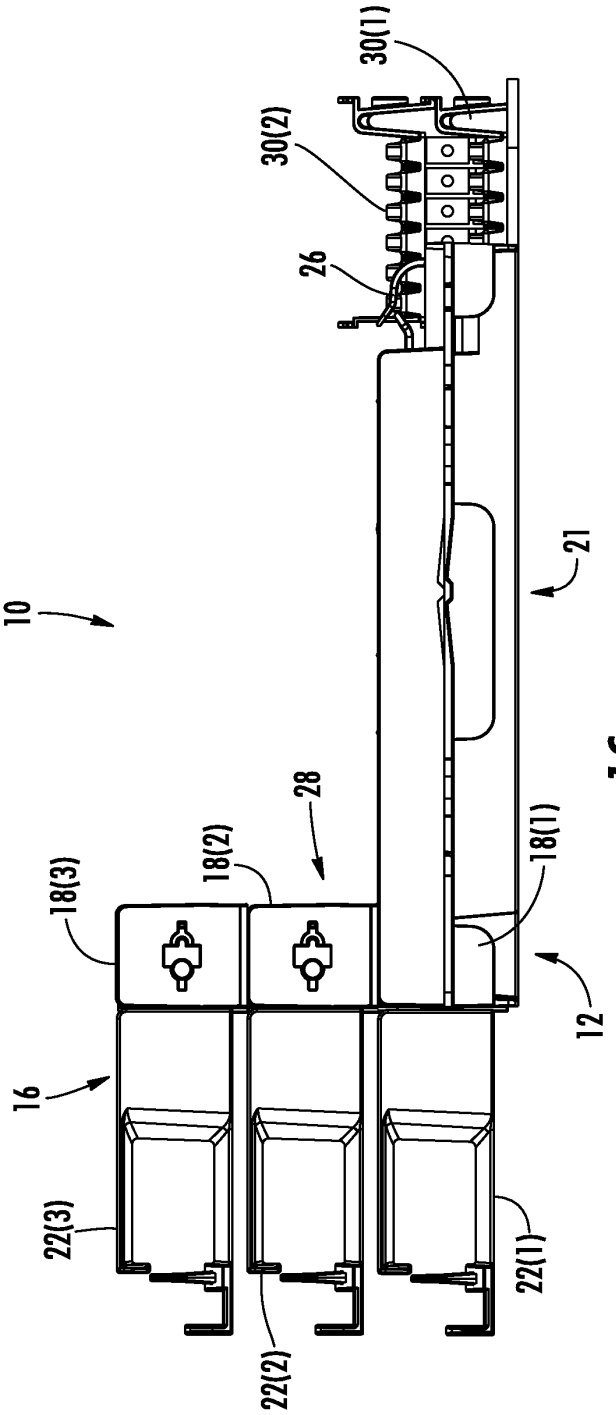

FIG. 1C

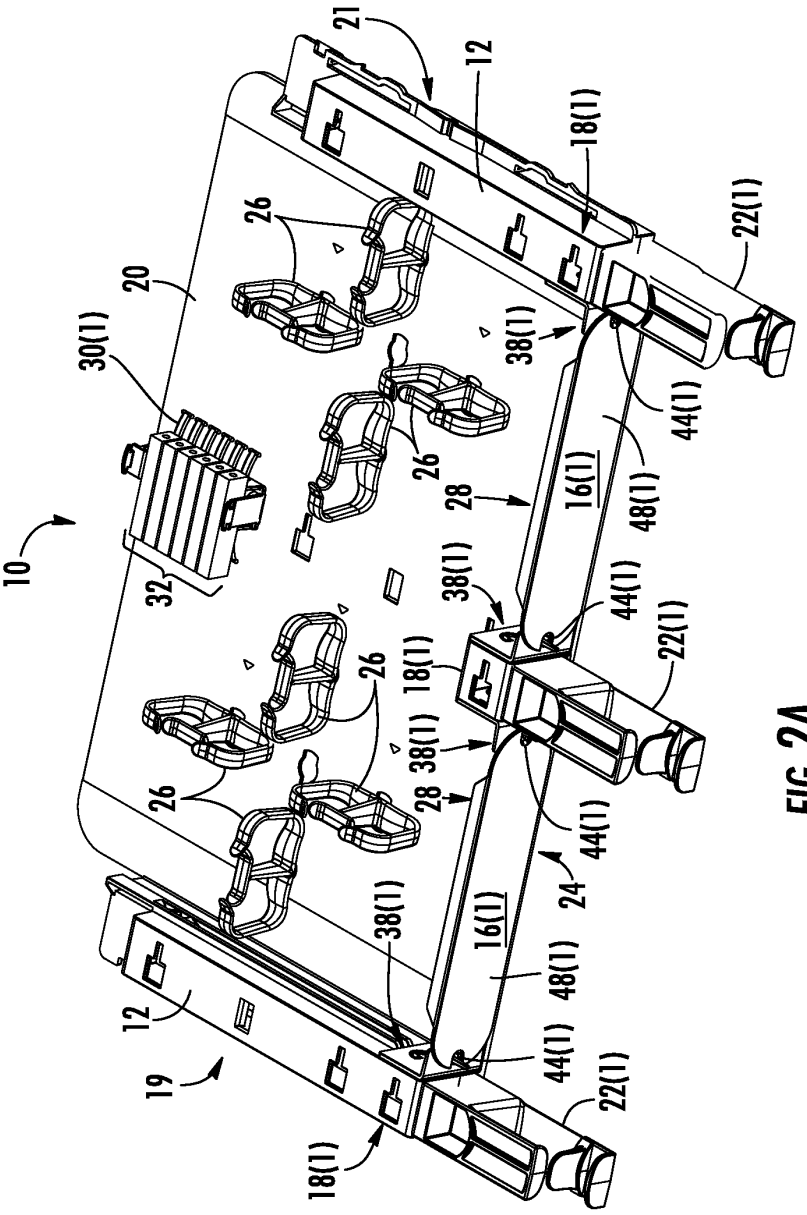

FIG. 2A

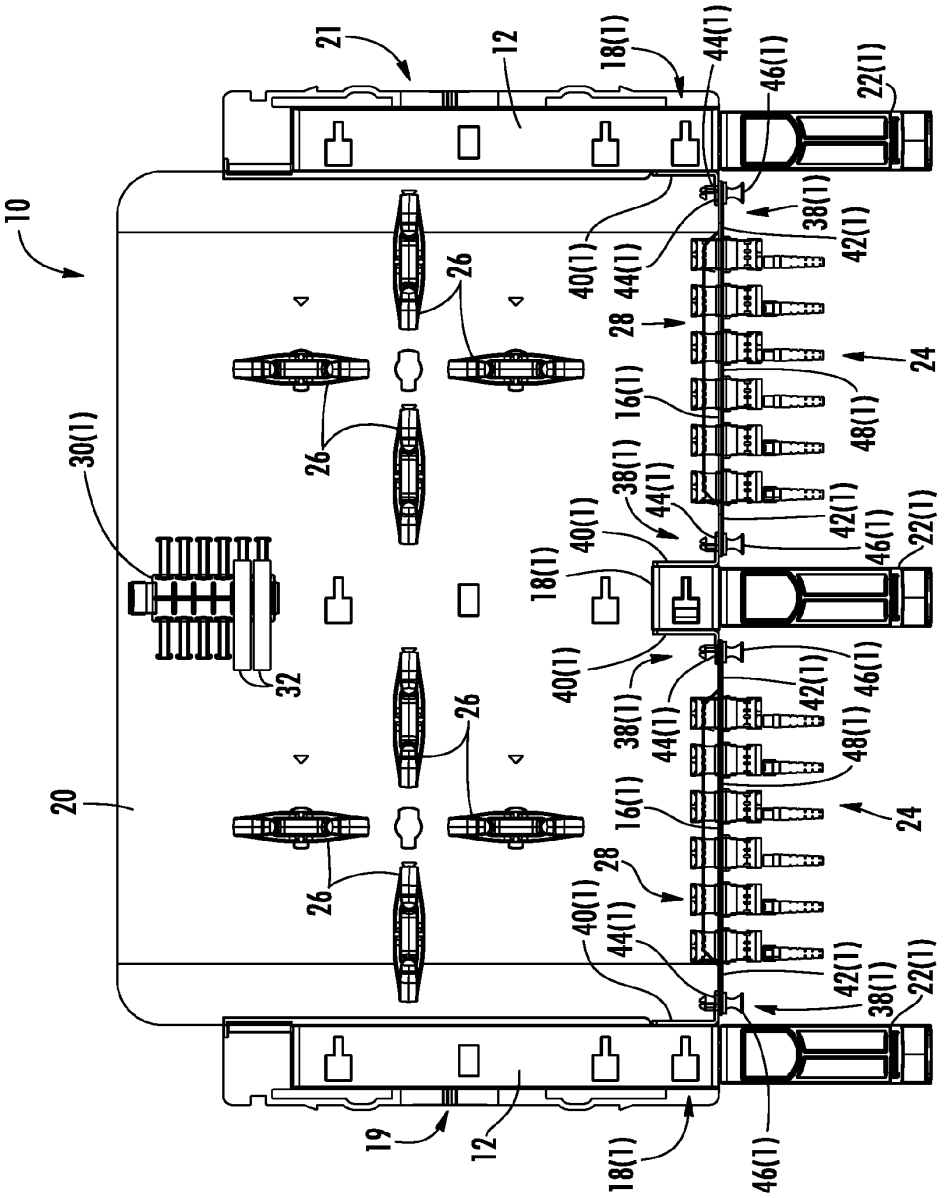
10
20
21
12
18(1)
44(1)
46(1)
22(1)
38(1)
42(1)
40(1)
44(1)
26
28
24
16(1)
48(1)
30(1)
32
19

FIG. 2B

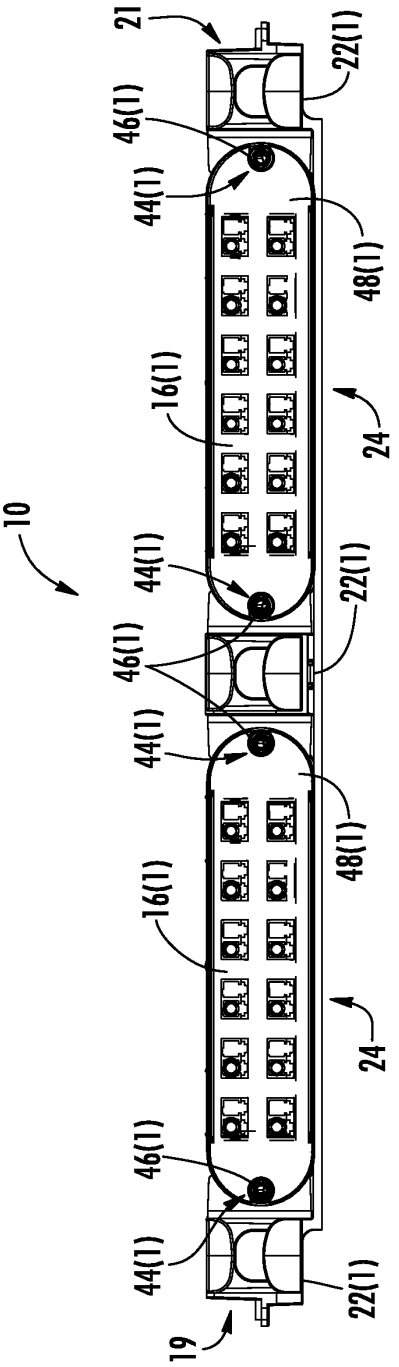

FIG. 2C

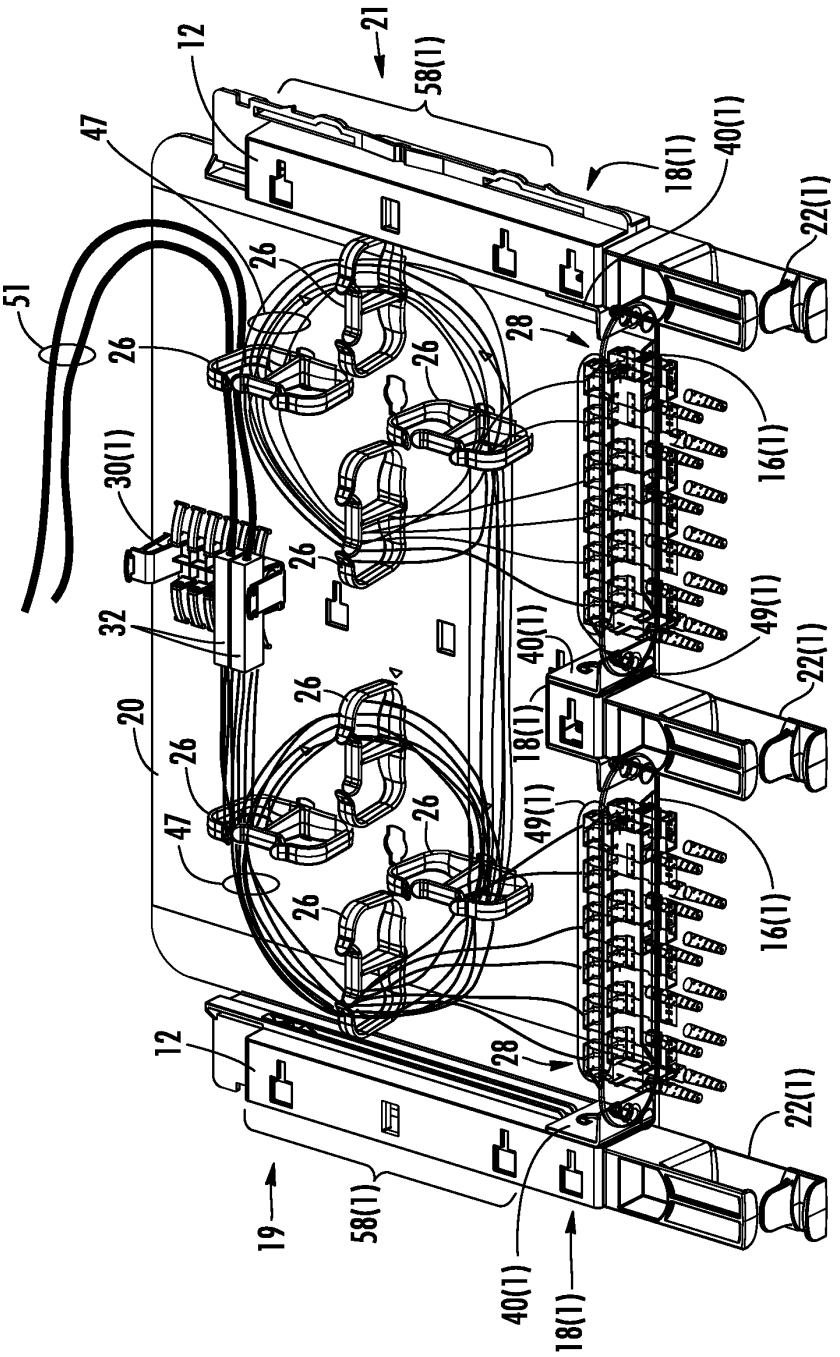

FIG. 2D

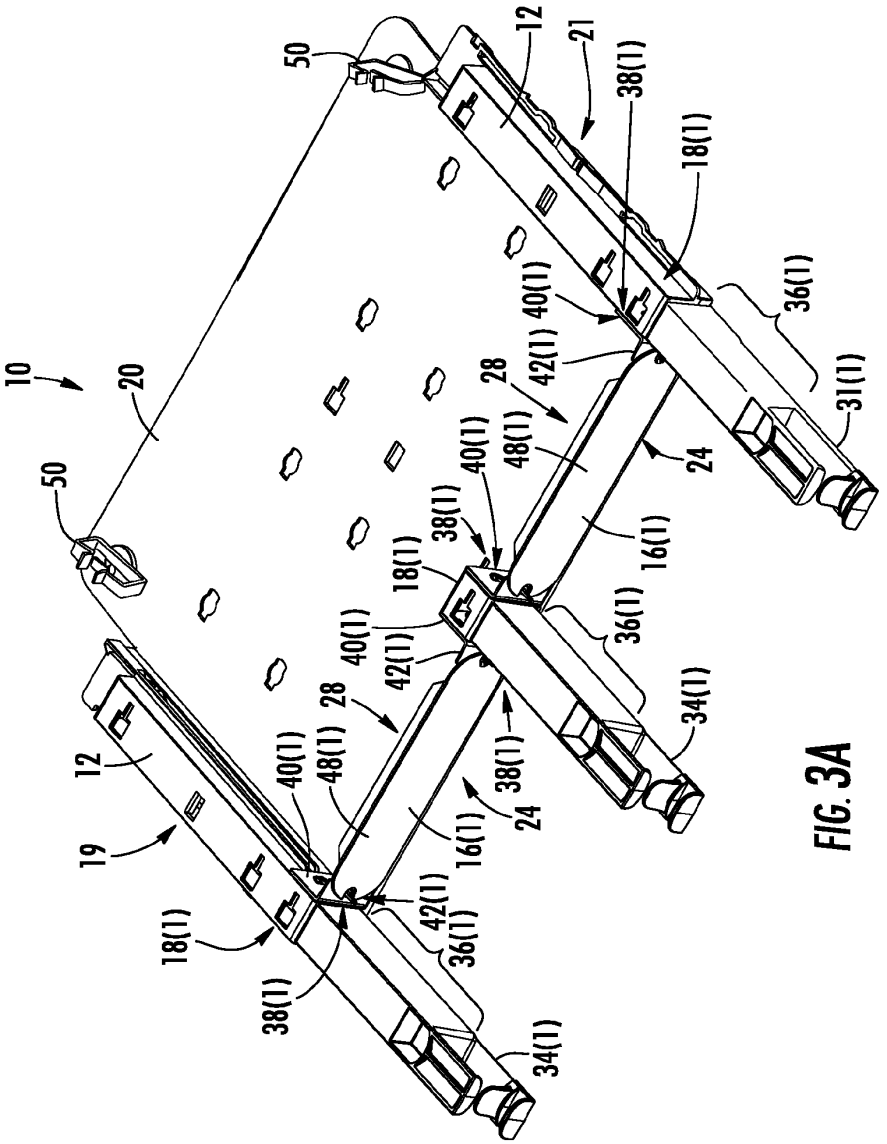
10
20
50
50
12
21
38(1)
18(1)
36(1)
31(1)
40(1)
42(1)
28
48(1)
24
16(1)
38(1)
18(1)
40(1)
42(1)
36(1)
34(1)
28
40(1)
48(1)
38(1)
24
16(1)
12
19
18(1)
38(1)
42(1)
36(1)
34(1)

FIG. 3A

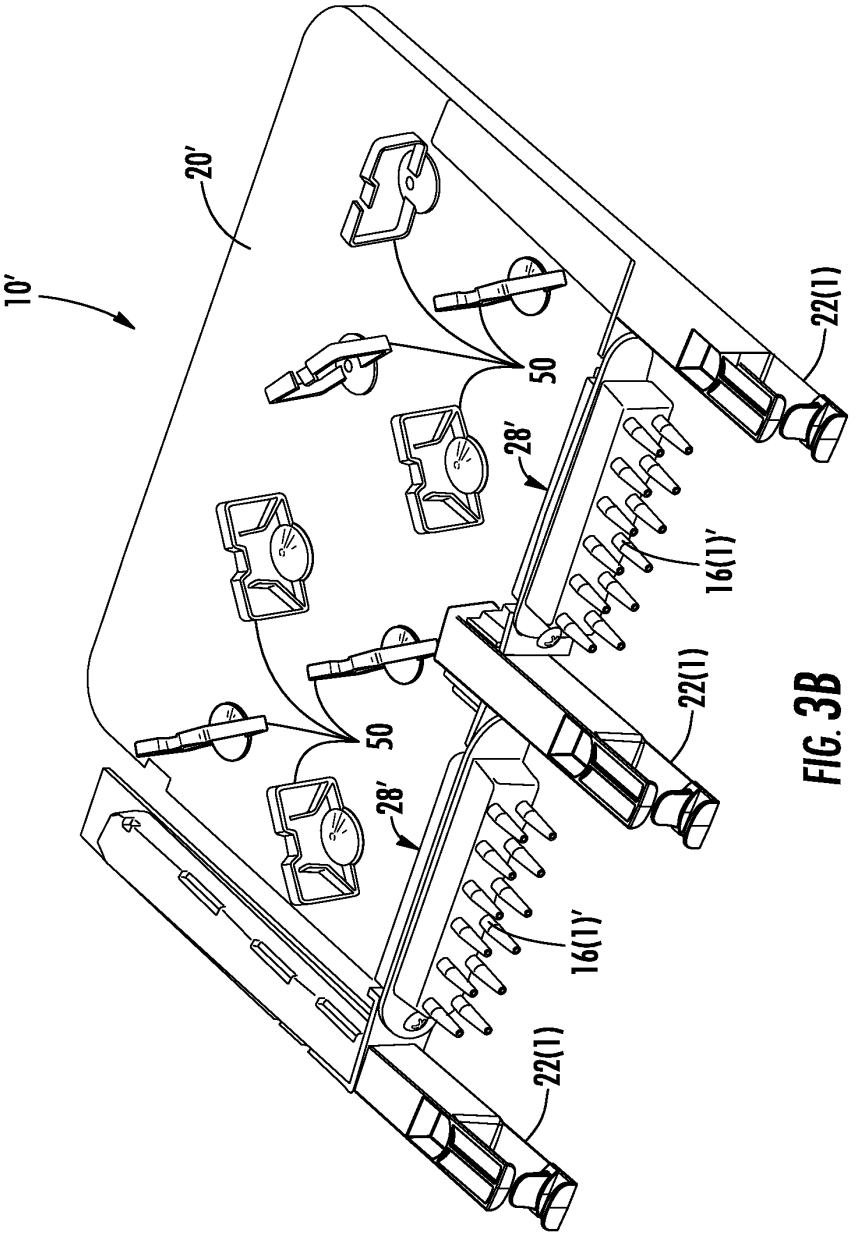

FIG. 3B

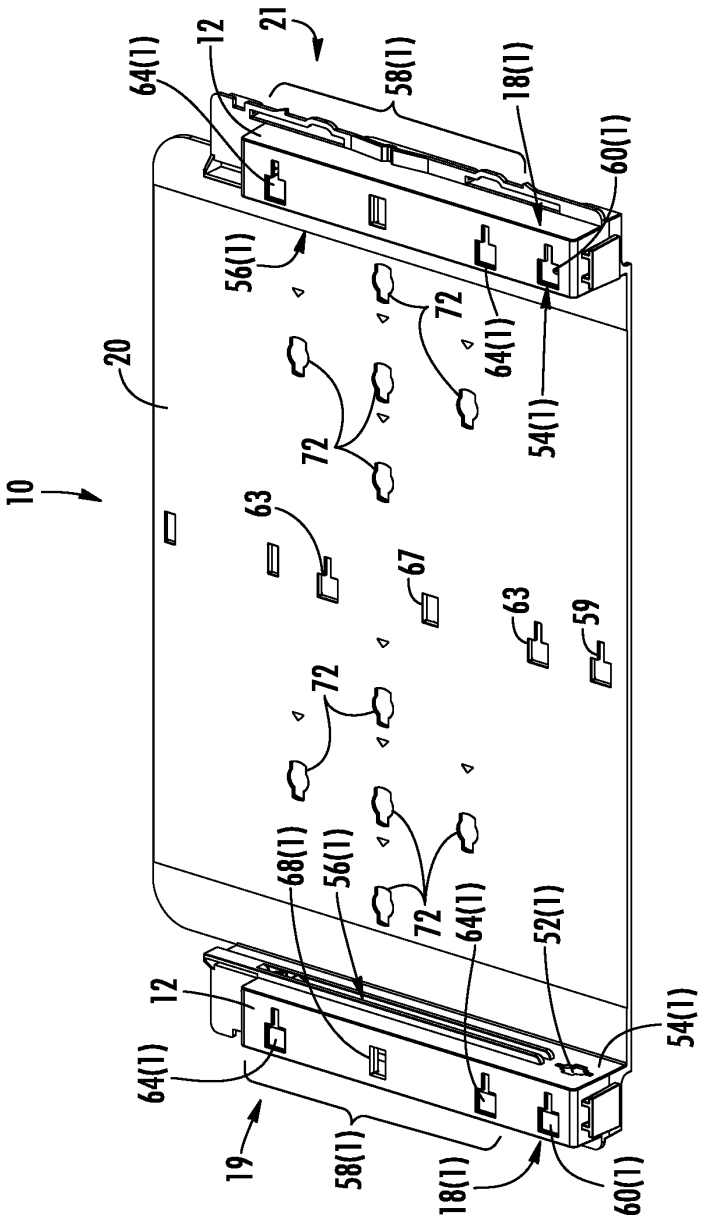

FIG. 4

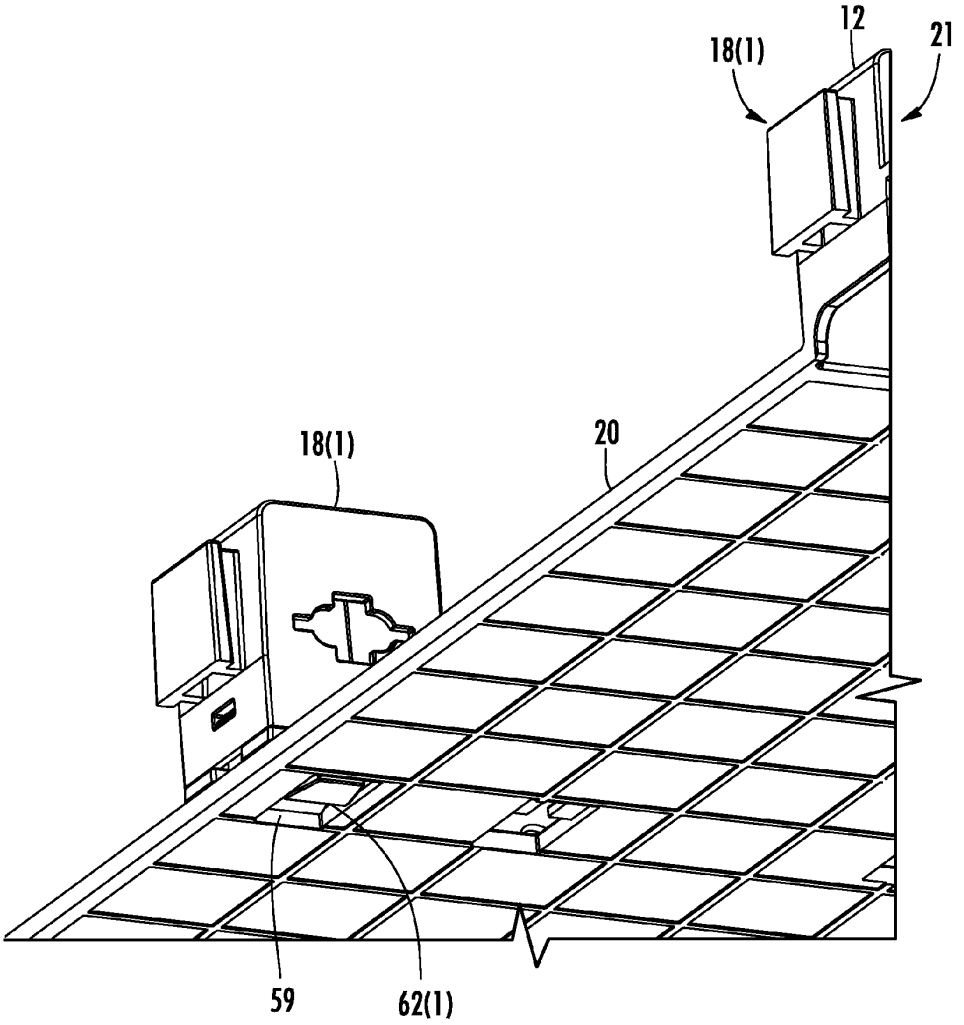

FIG. 5A

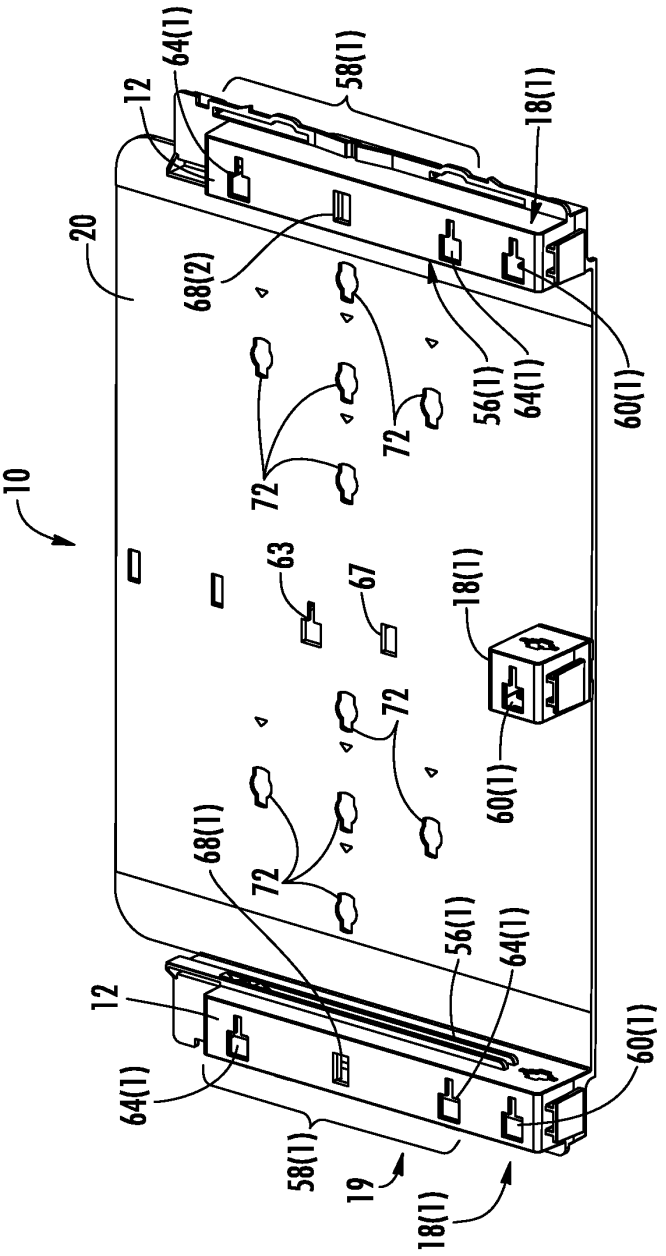
10
20
12
64(1)
58(1)
18(1)
68(2)
56(1)
64(1)
60(1)
72
63
67
18(1)
60(1)
68(1)
72
56(1)
64(1)
12
64(1)
58(1)
19
18(1)
60(1)

FIG. 5B

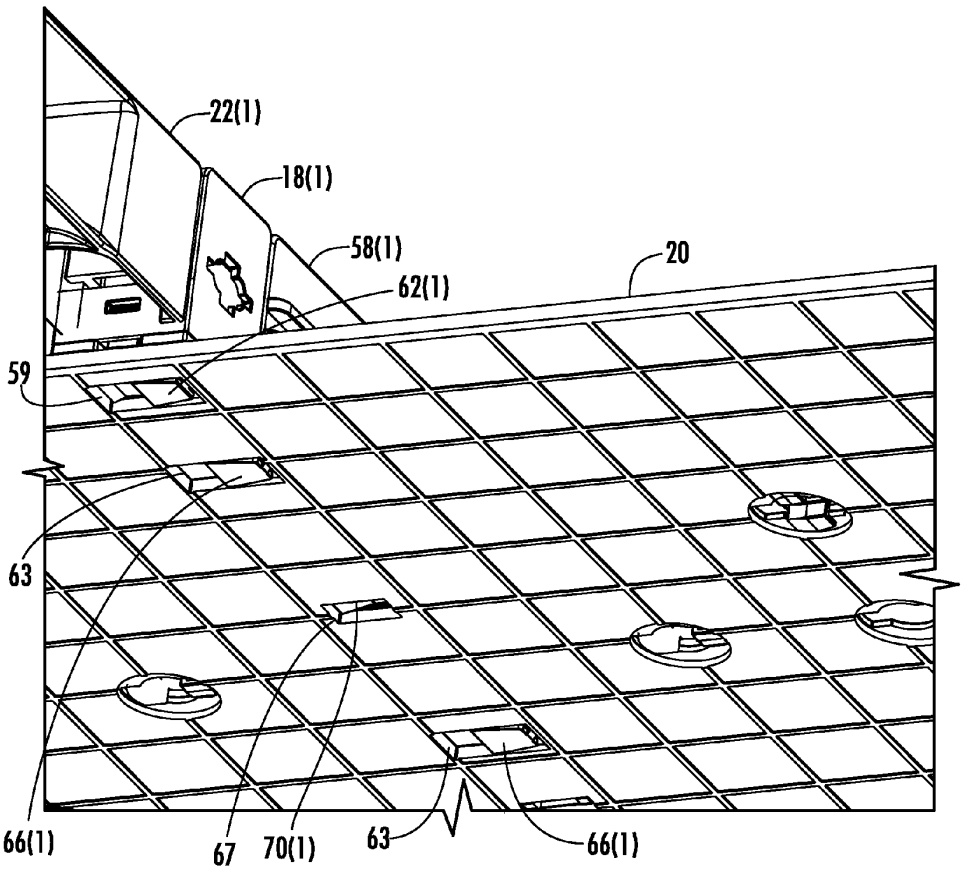

FIG. 5C

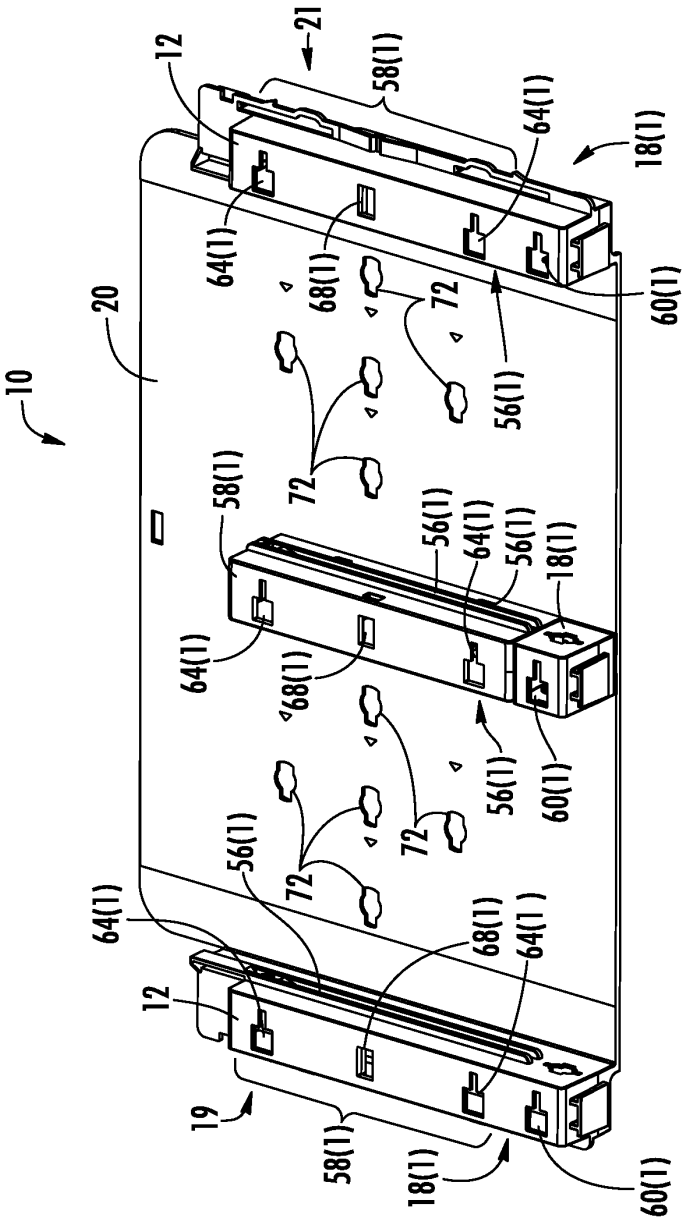

FIG. 5D

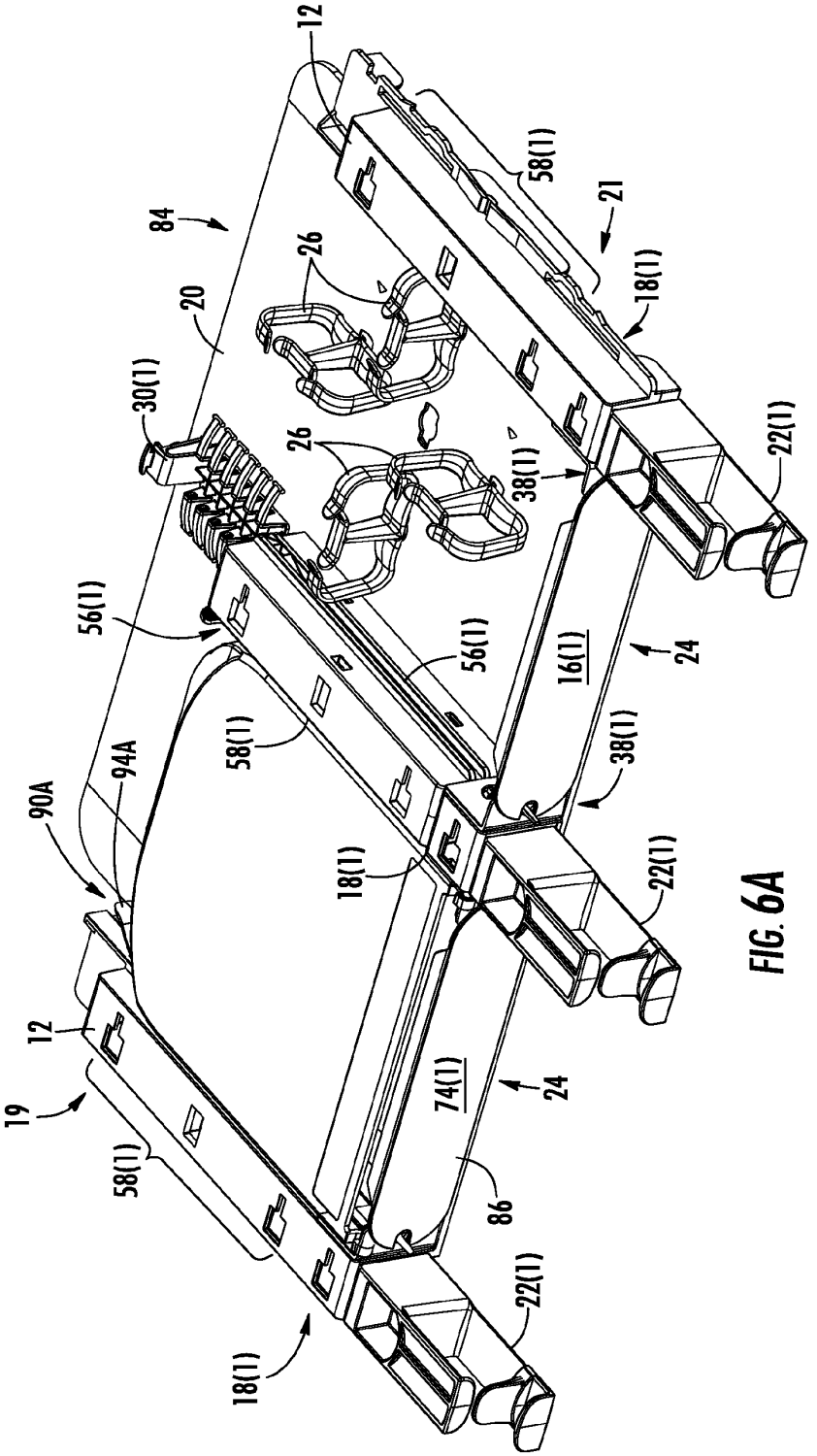
12
58(1)
21
84
26
18(1)
20
30(1)
26
38(1)
22(1)
56(1)
56(1)
16(1)
24
58(1)
38(1)
94A
90A
18(1)
22(1)
12
19
74(1)
24
58(1)
86
22(1)
18(1)

FIG. 6A

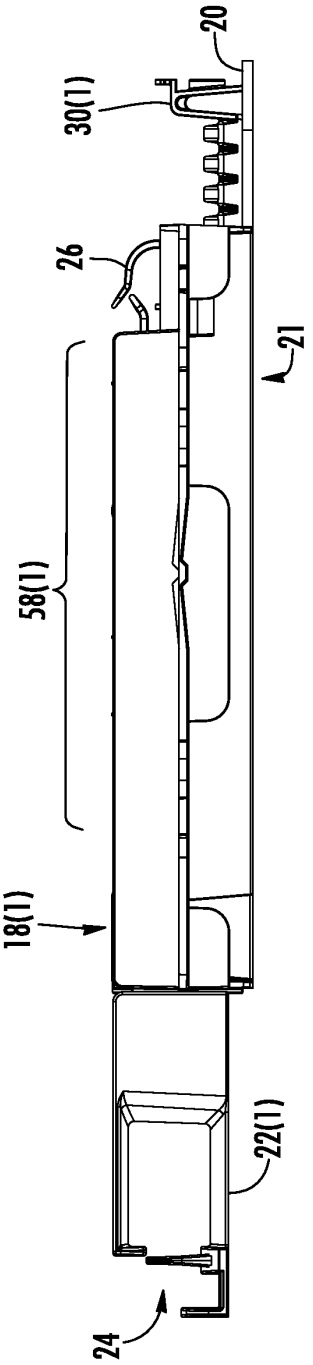

FIG. 6B

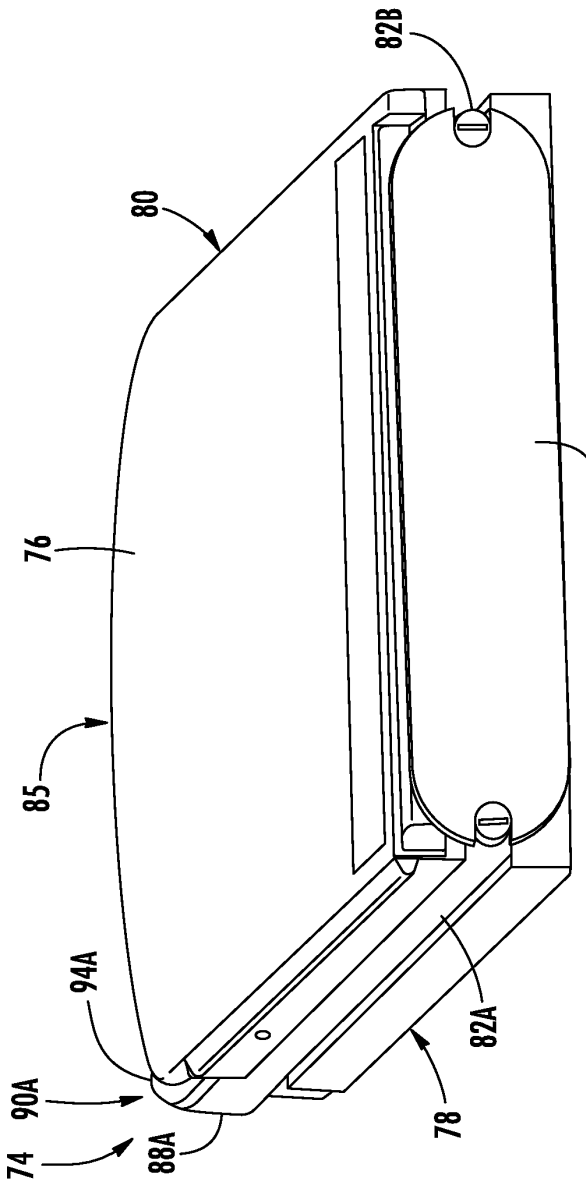

FIG. 6C

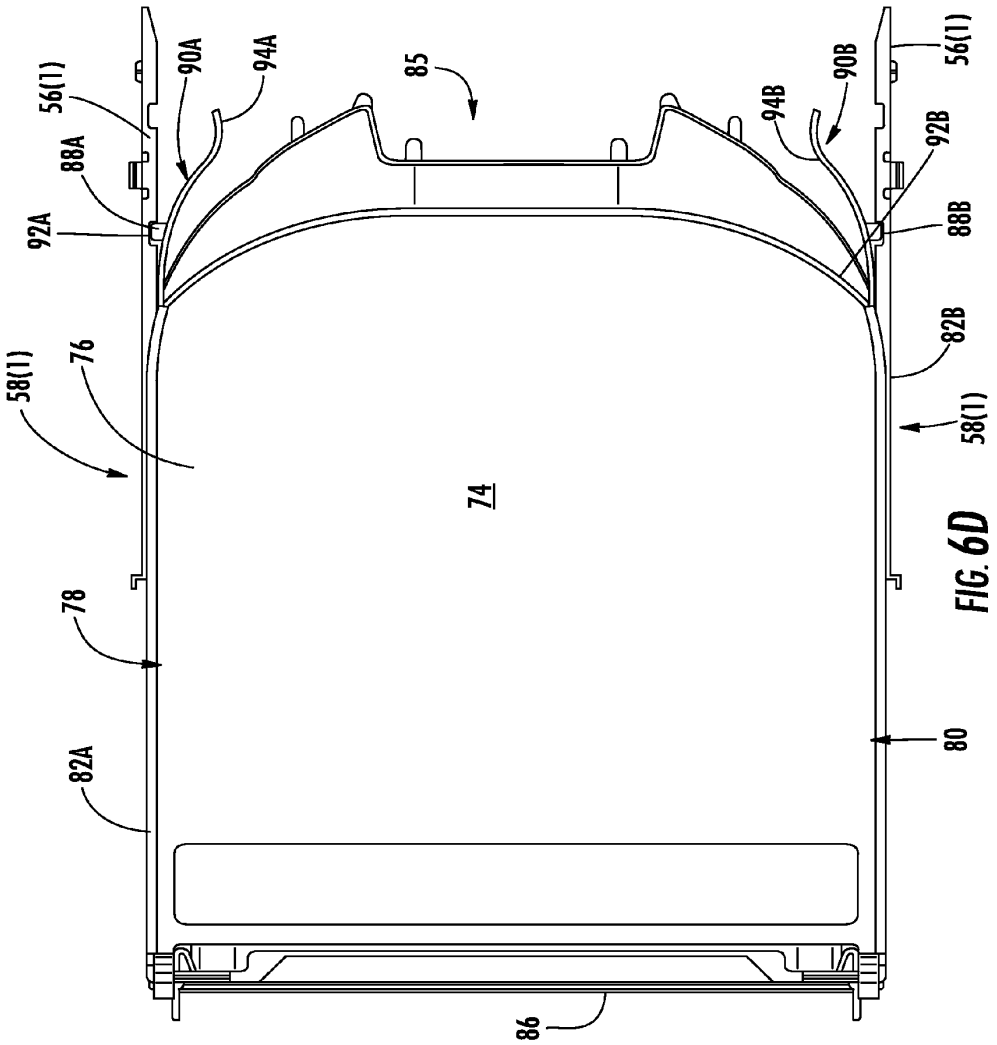
56(1)
88A
92A
58(1)
76
78
82A
90A
94A
85
74
86
94B
90B
92B
88B
82B
58(1)
80
56(1)

FIG. 6D

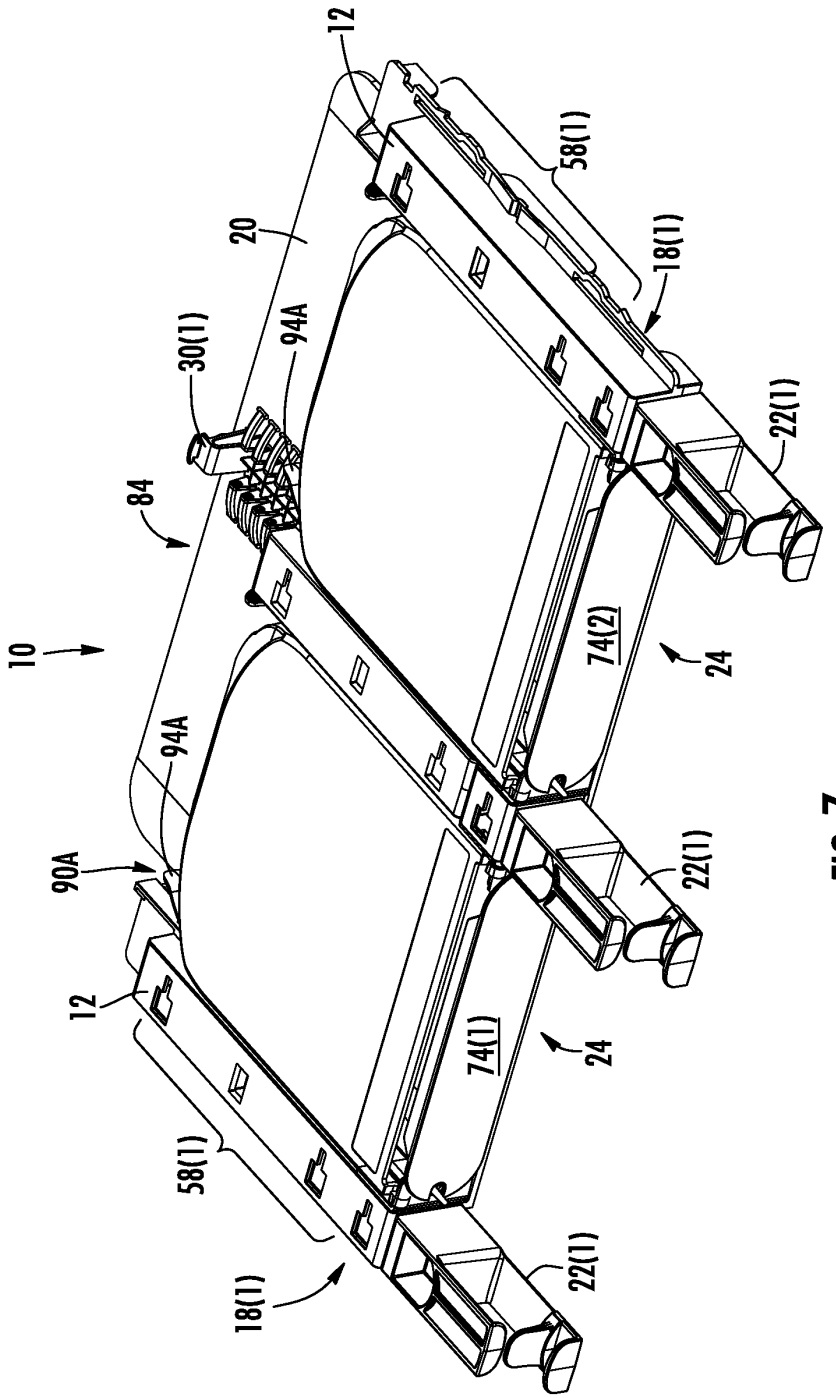
12
58(1)
20
18(1)
30(1)
94A
22(1)
84
10
74(2)
24
94A
90A
22(1)
12
74(1)
24
58(1)
18(1)
22(1)

FIG. 7

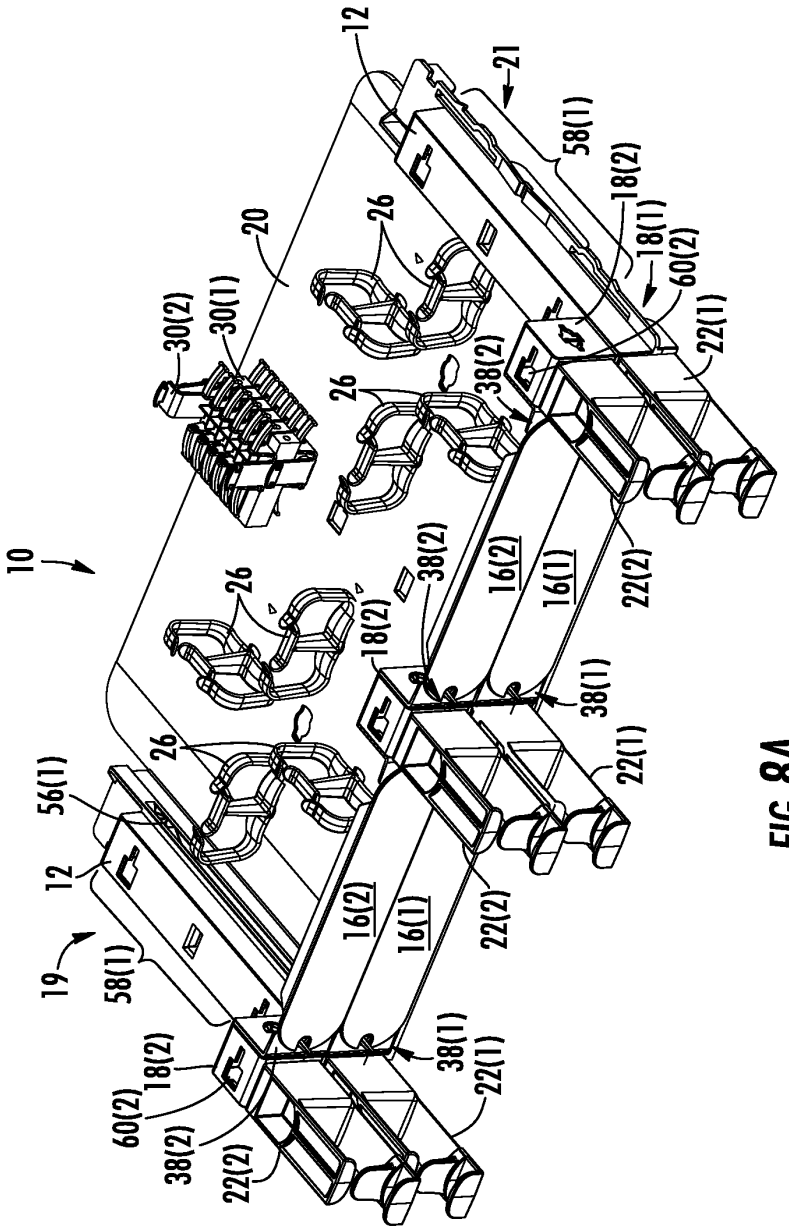
10
12
21
58(1)
18(2)
18(1)
60(2)
22(1)
20
26
30(2)
30(1)
38(2)
16(2)
16(1)
22(2)
38(1)
56(1)
19
60(2)

FIG. 8A

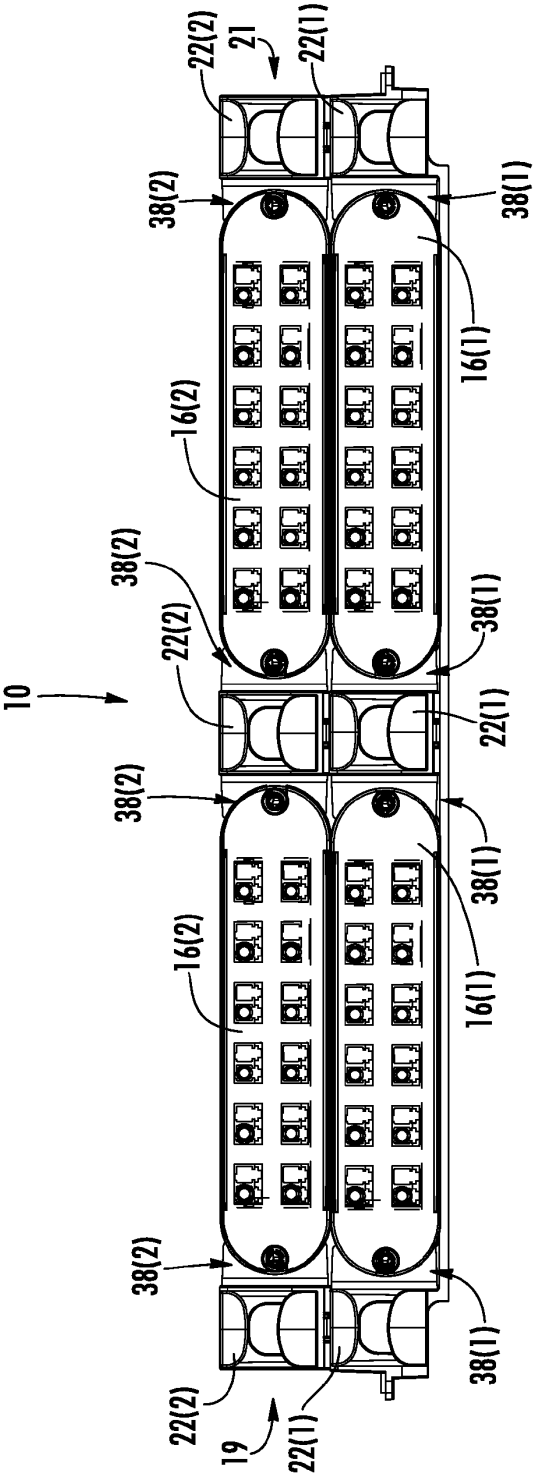

FIG. 8B

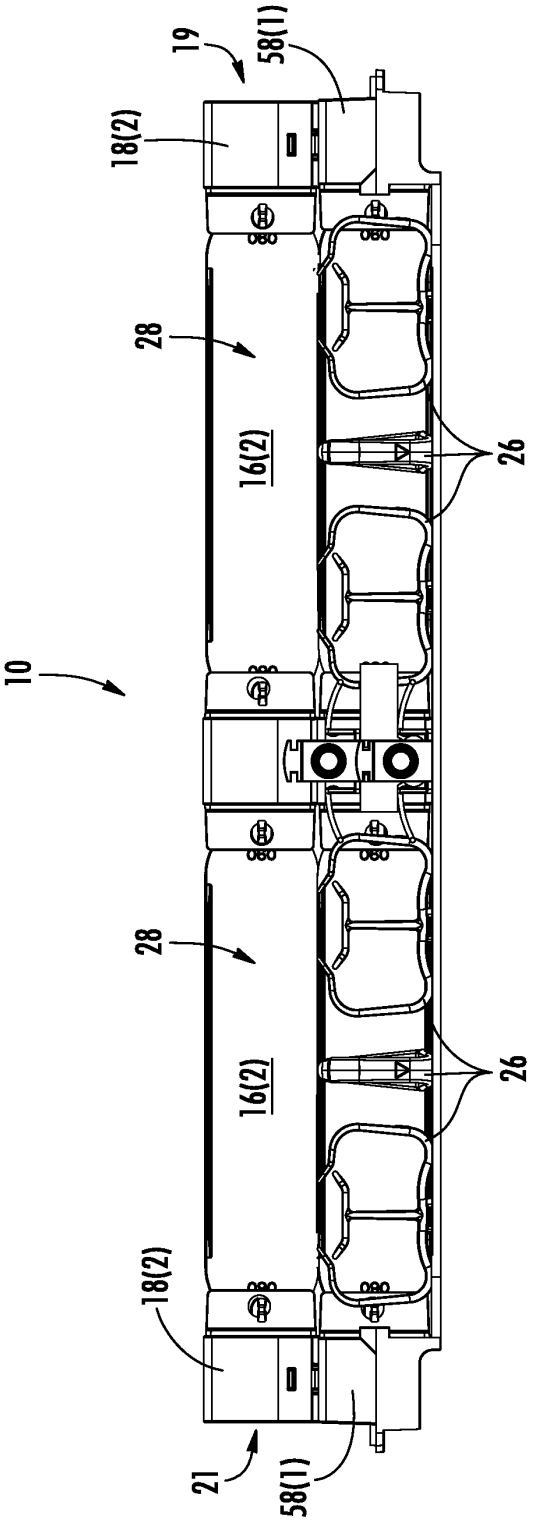

FIG. 8C

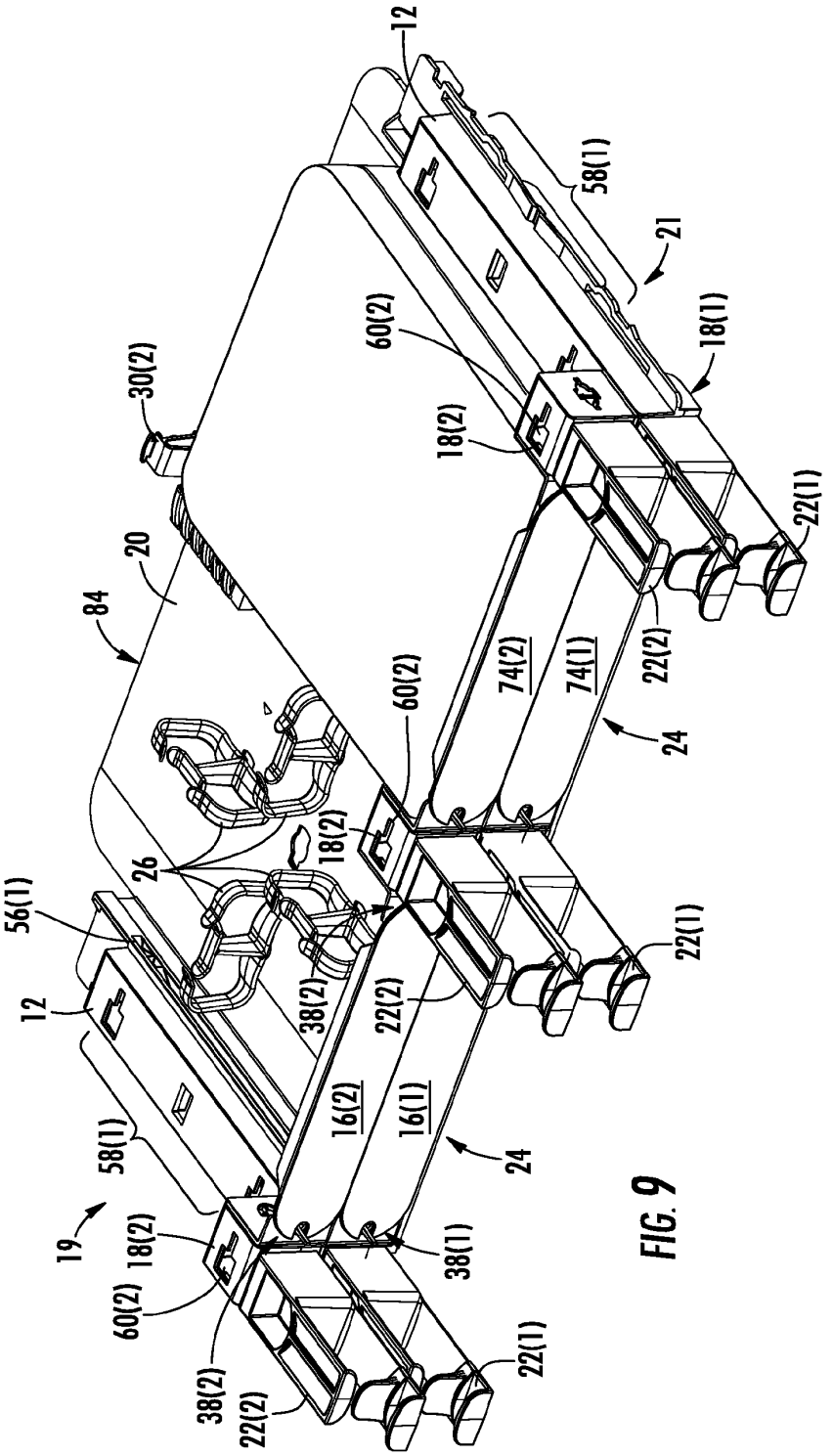
12
58(1)
21
18(1)
60(2)
18(2)
30(2)
22(1)
20
84
22(2)
74(2)
74(1)
24
60(2)
18(2)
26
56(1)
22(1)
38(2)
22(2)
12
16(2)
16(1)
58(1)
24
19
18(2)
38(1)
60(2)
22(1)
38(2)
22(2)

FIG. 9

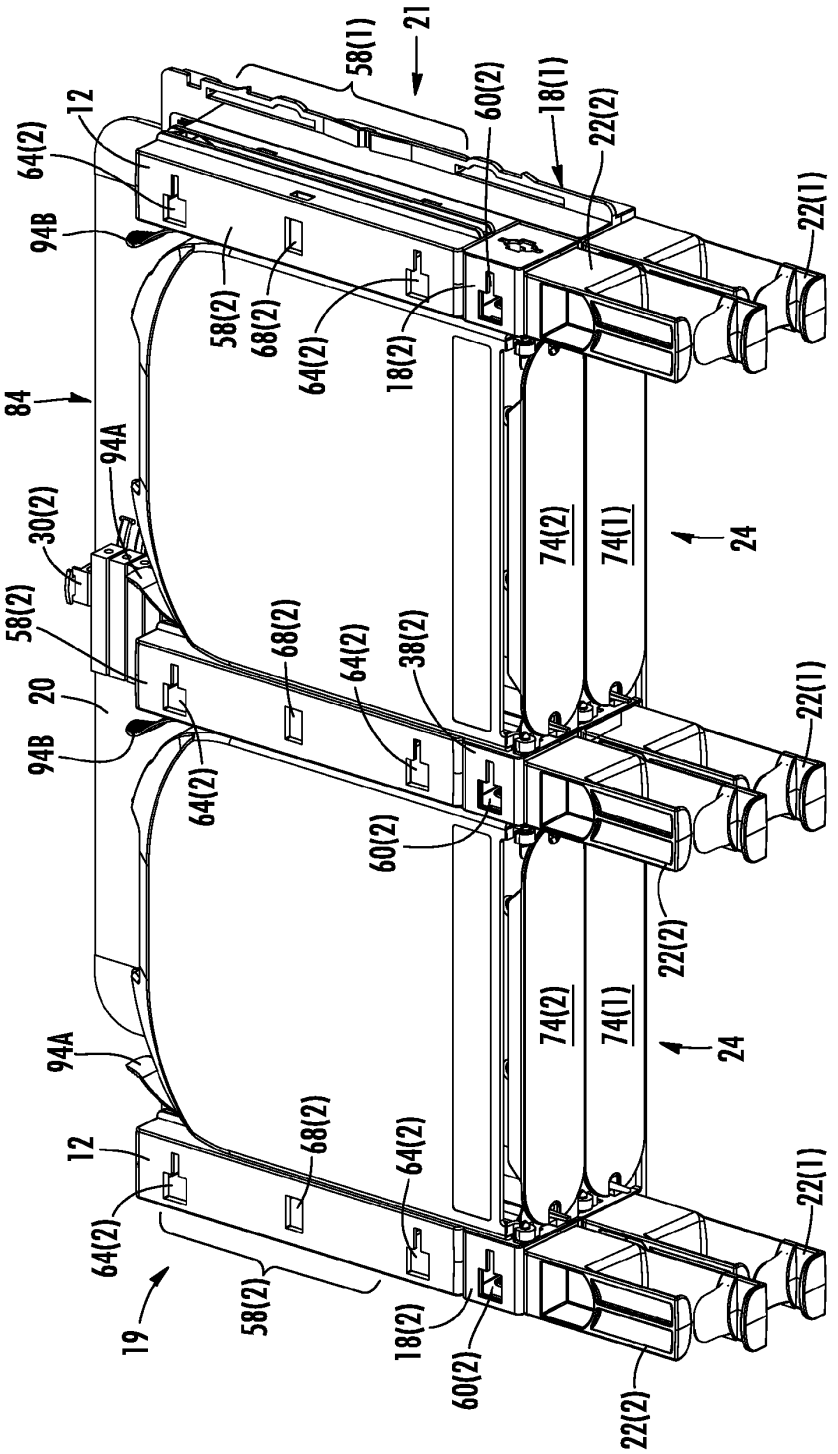
21
58(1)
60(2)
18(1)
22(2)
22(1)
12
64(2)
94B
58(2)
68(2)
64(2)
18(2)
84
94A
30(2)
74(2)
74(1)
24
58(2)
68(2)
64(2)
38(2)
20
94B
64(2)
60(2)
22(2)
22(1)
74(2)
74(1)
24
94A
12
68(2)
64(2)
64(2)
58(2)
19
18(2)
60(2)
22(2)
22(1)

FIG. 10

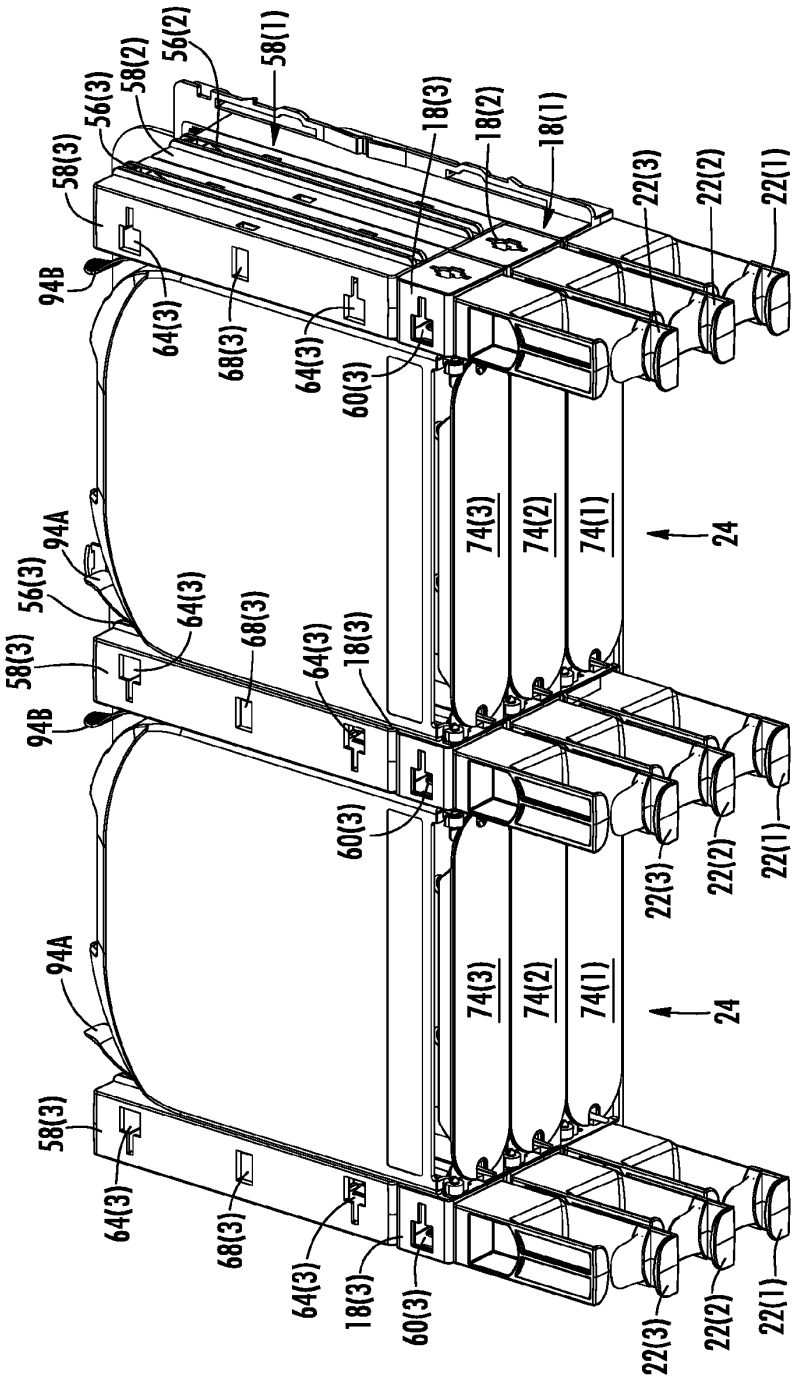
58(3)
56(3)
58(2)
56(2)
58(1)
18(3)
18(2)
18(1)
22(3)
22(2)
22(1)
94B
64(3)
68(3)
64(3)
60(3)
74(3)
74(2)
74(1)
24
94A
56(3)
58(3)
64(3)
68(3)
64(3)
18(3)
94B
60(3)
22(3)
22(2)
22(1)
94A
74(3)
74(2)
74(1)
24
58(3)
64(3)
68(3)
64(3)
18(3)
60(3)
22(3)
22(2)
22(1)

FIG. 11

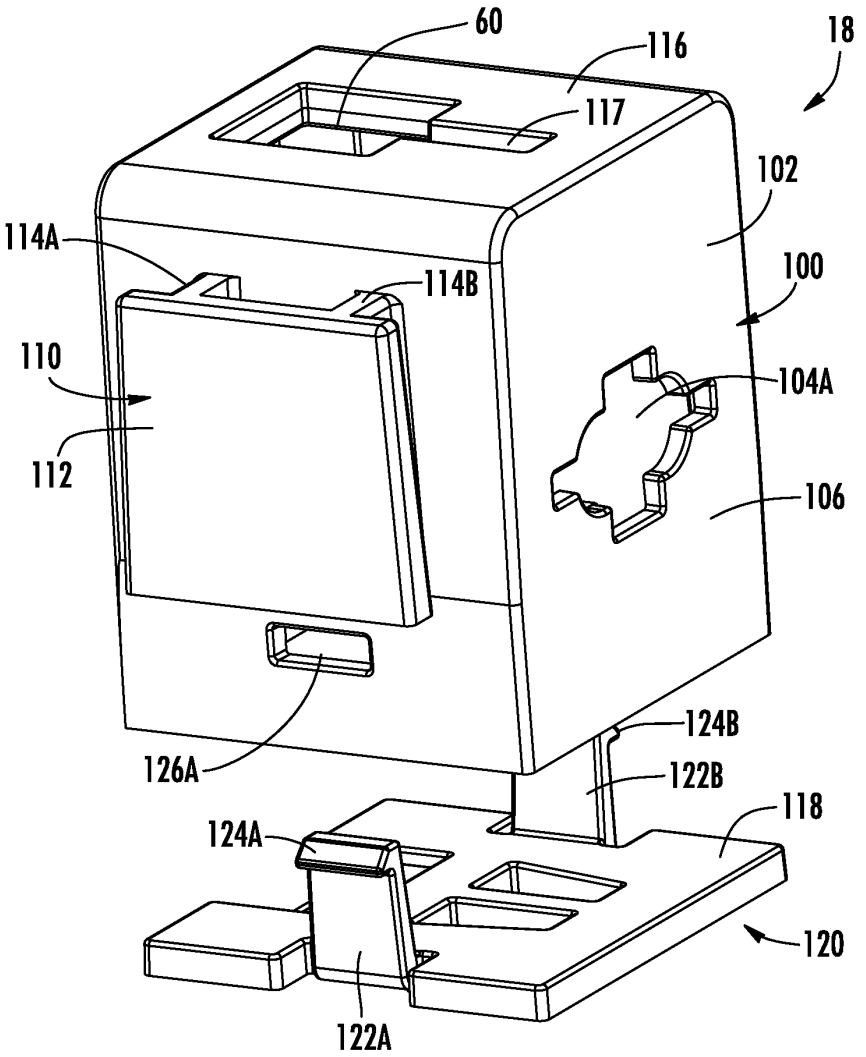
60
116
18
117
102
114A
114B
100
110
104A
112
106
126A
124B
122B
118
124A
120
122A

FIG. 12A

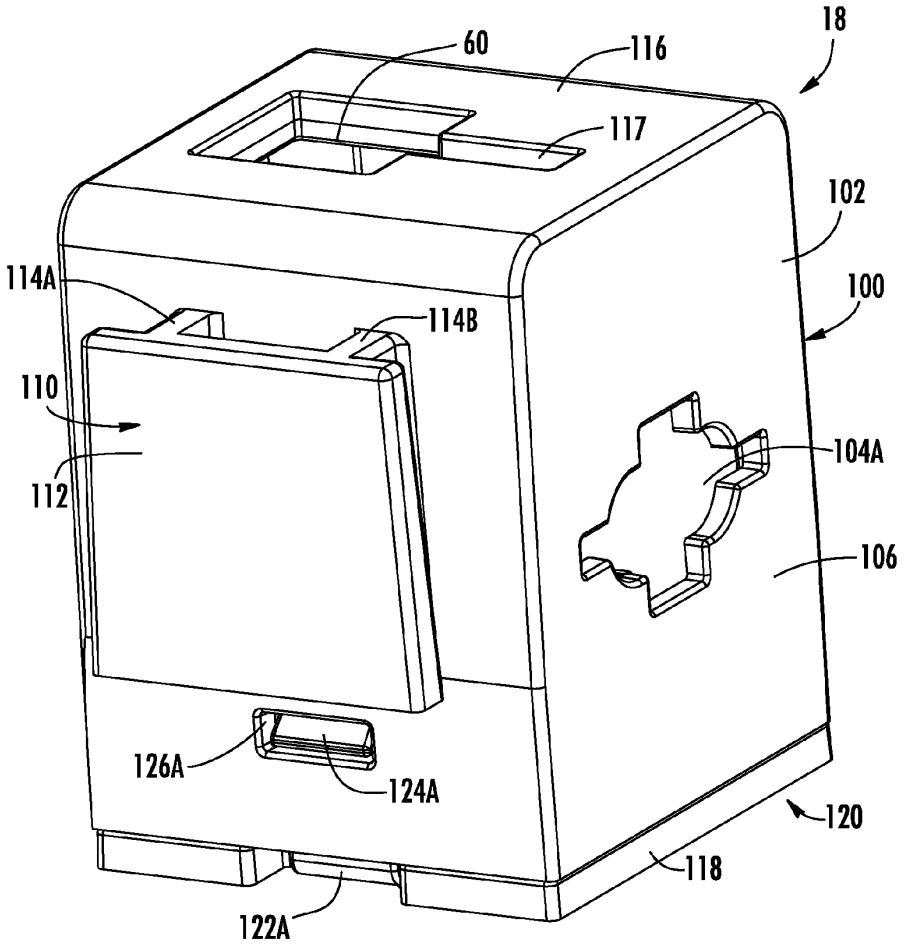
18
60
116
117
102
100
114A
114B
110
112
104A
106
126A
124A
120
118
122A

FIG. 12B

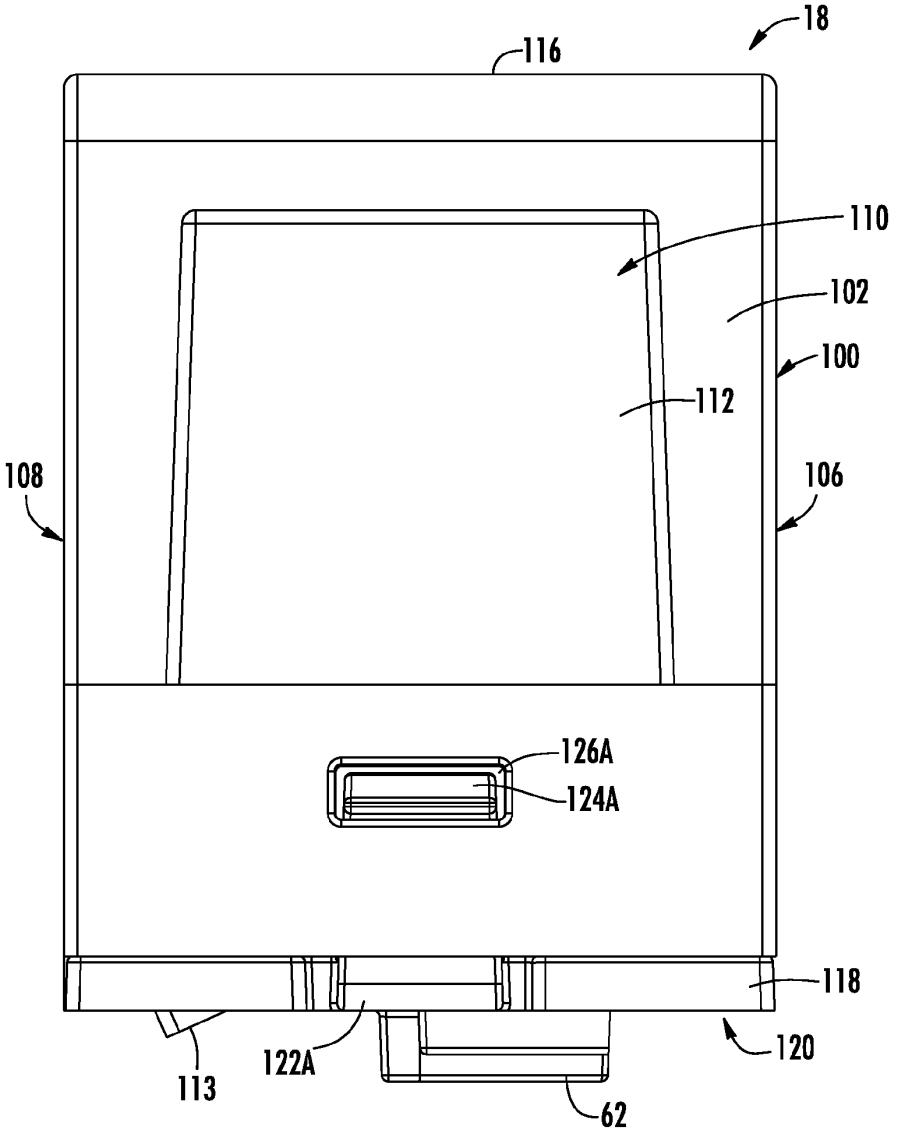

FIG. 12C

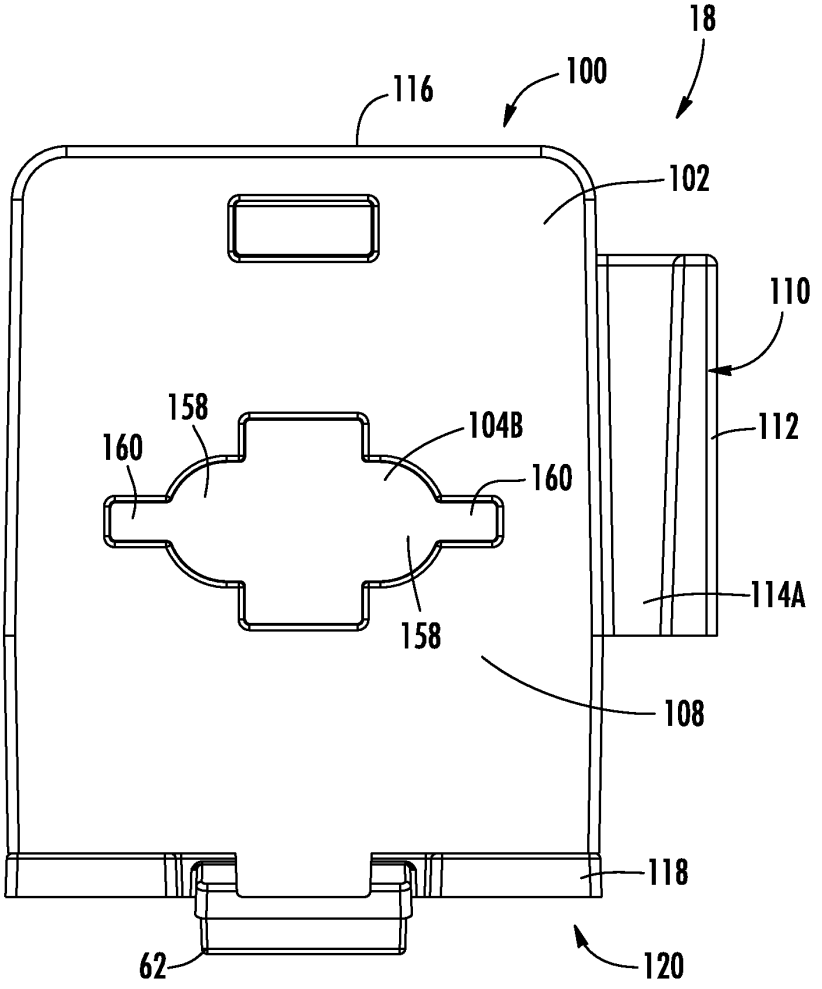

FIG. 12D

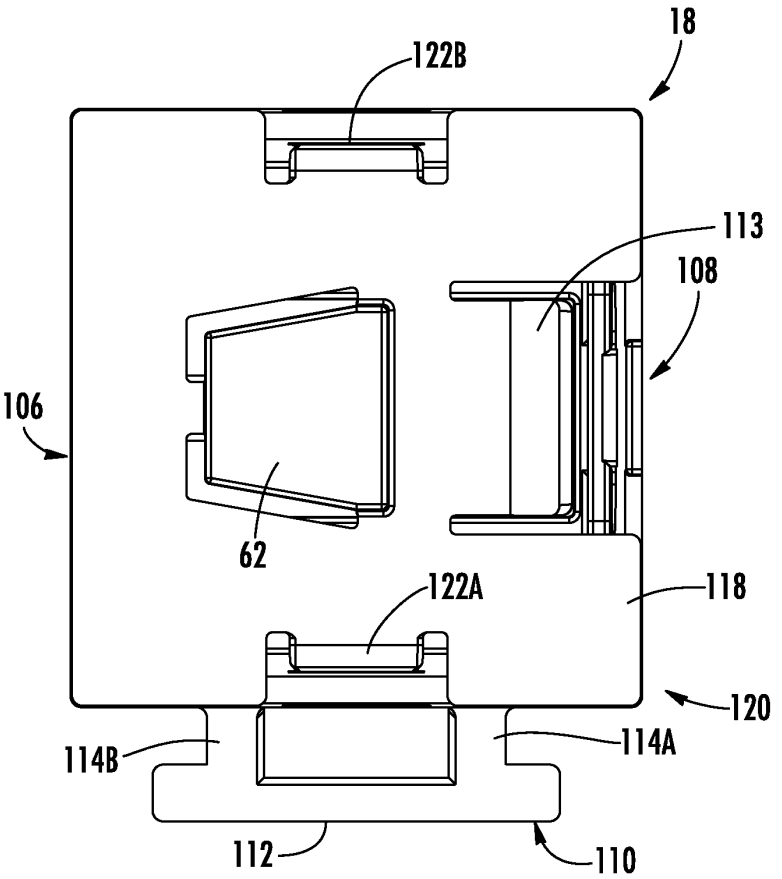

FIG. 12E

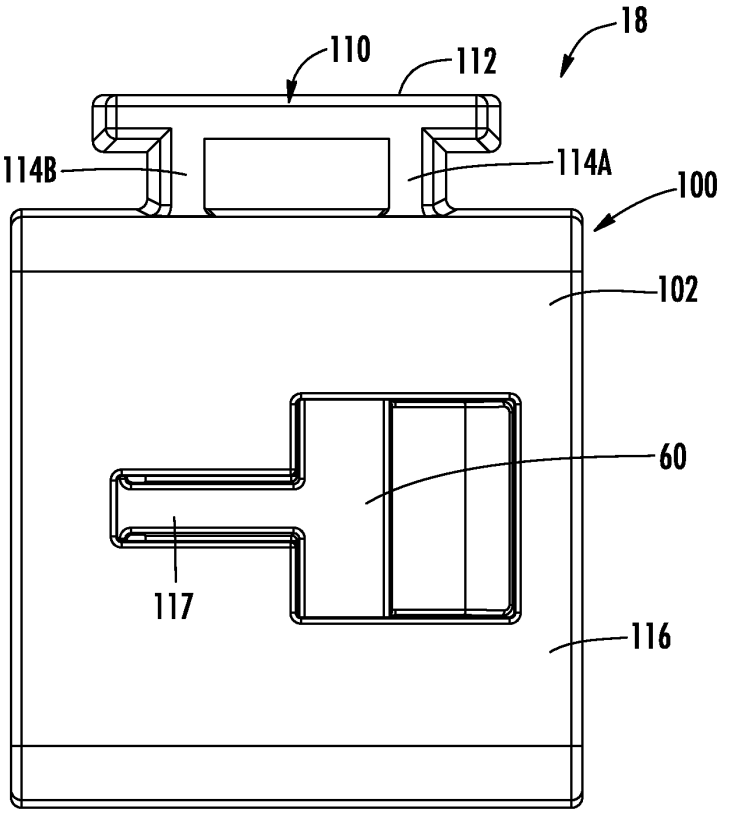

FIG. 12F

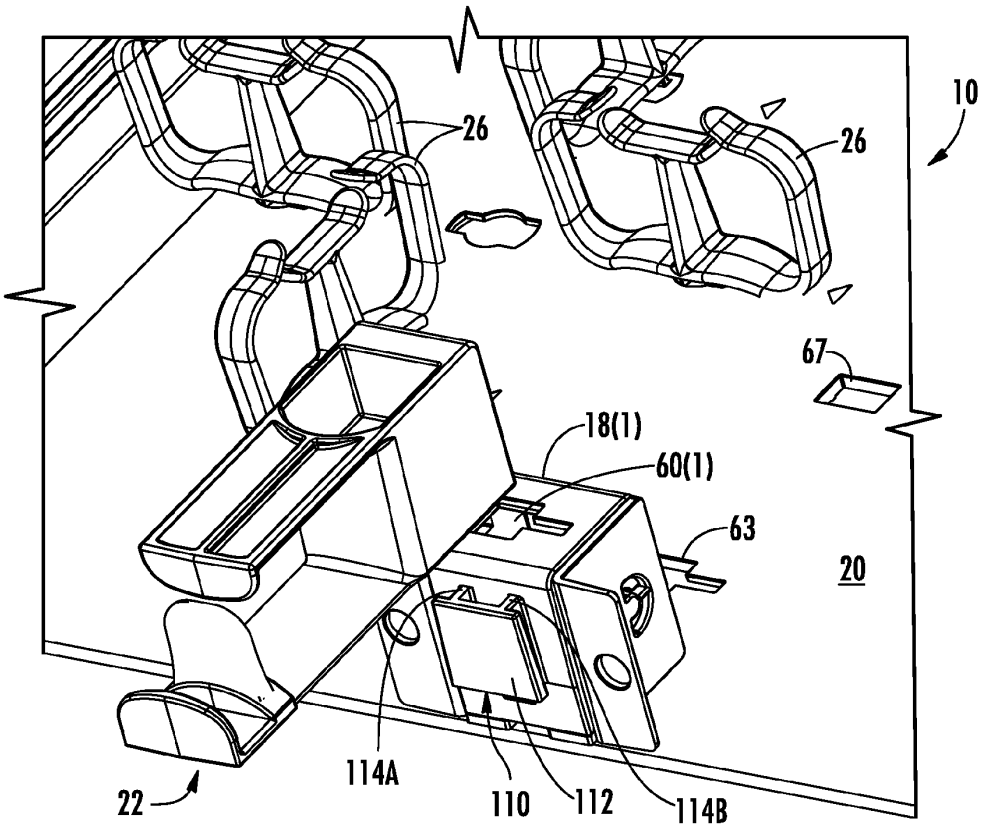

FIG. 13

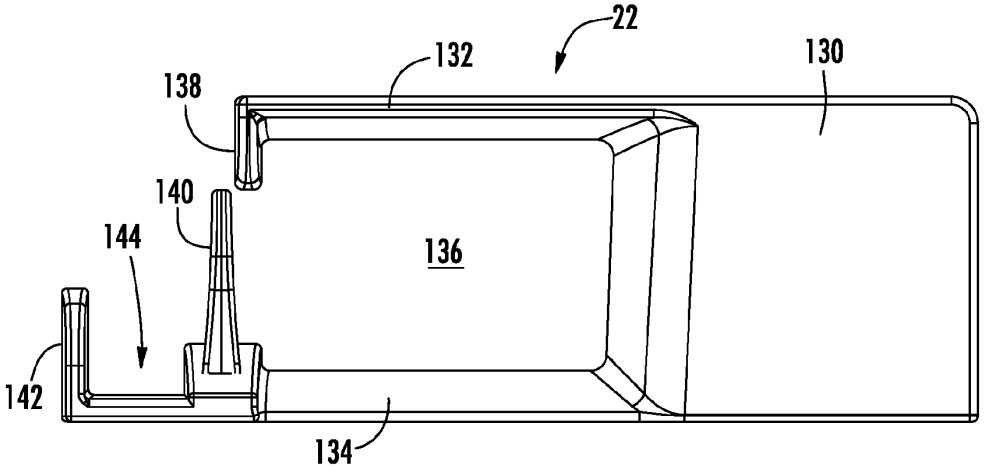

FIG. 14A

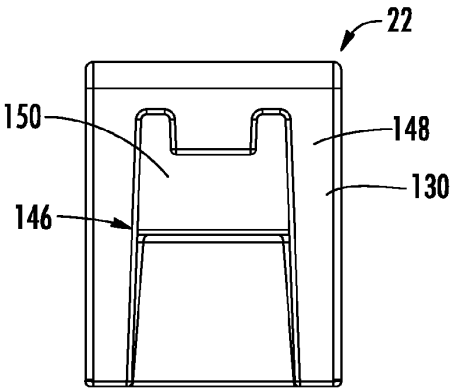

FIG. 14B

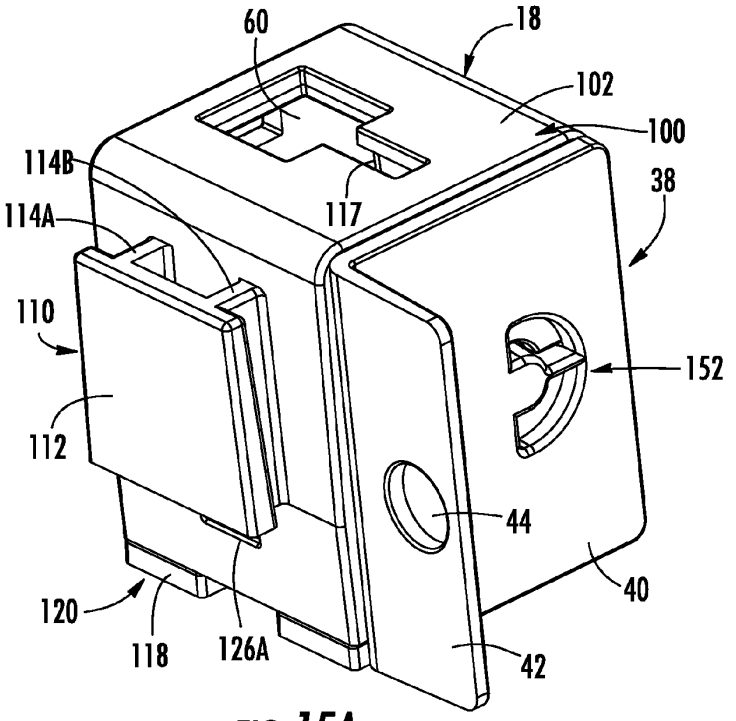

FIG. 15A

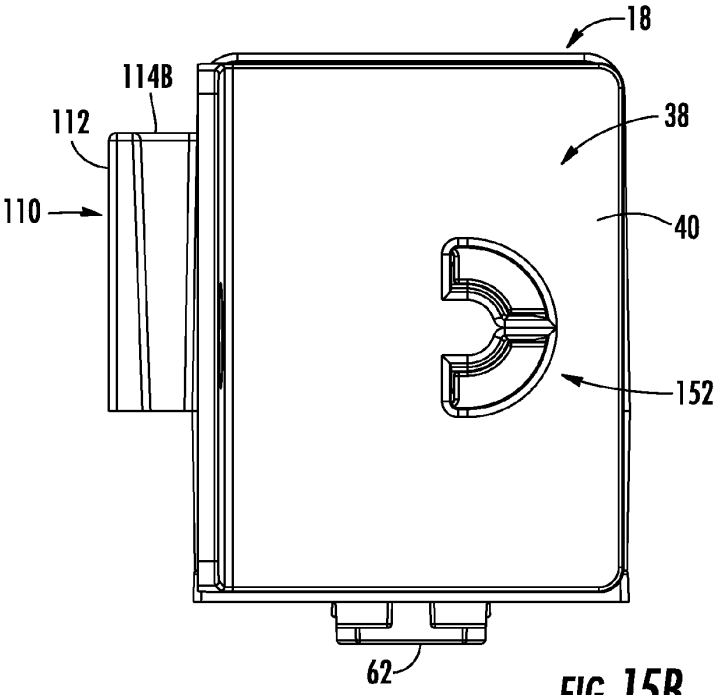

FIG. 15B

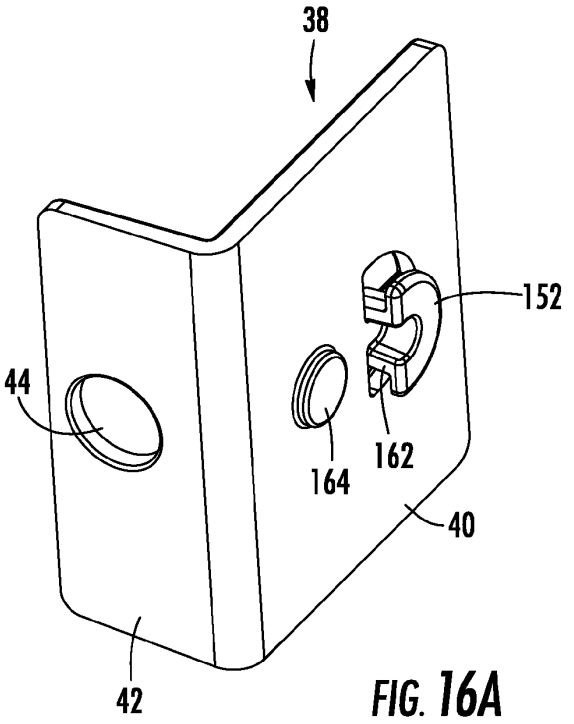

FIG. 16A

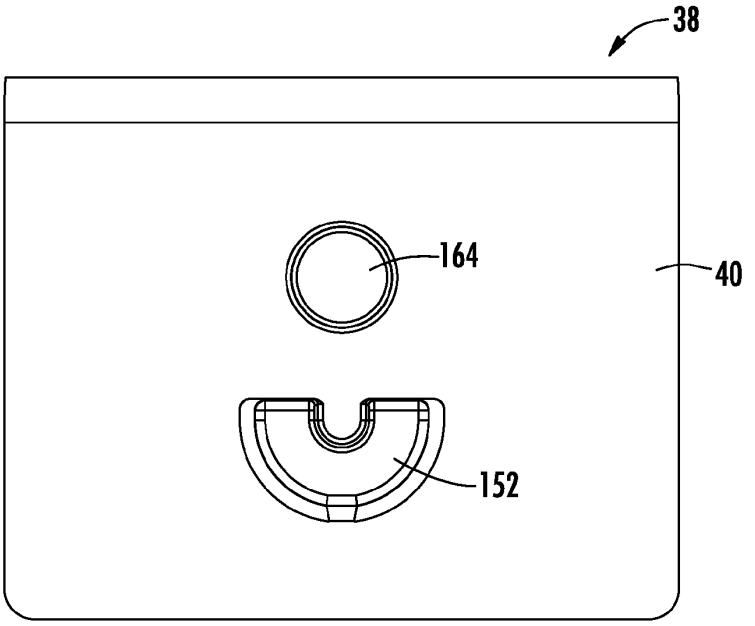

FIG. 16B

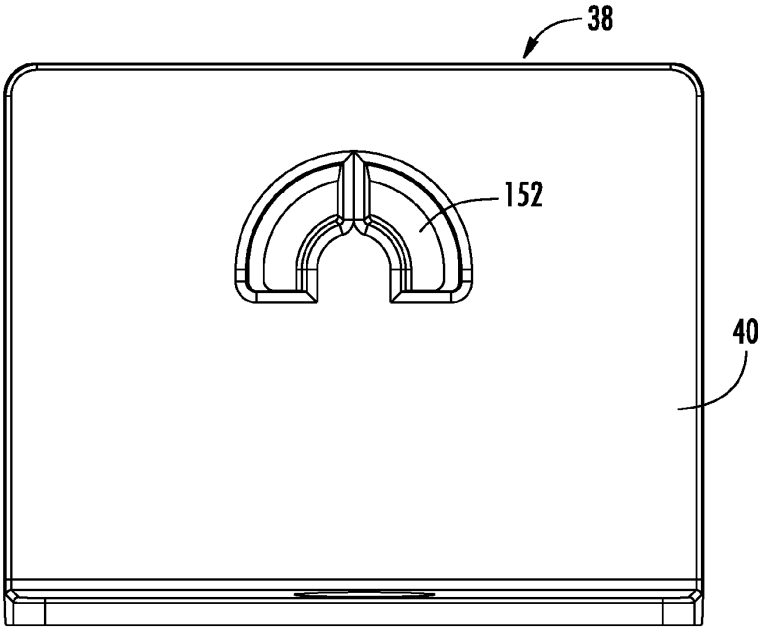

FIG. 16C

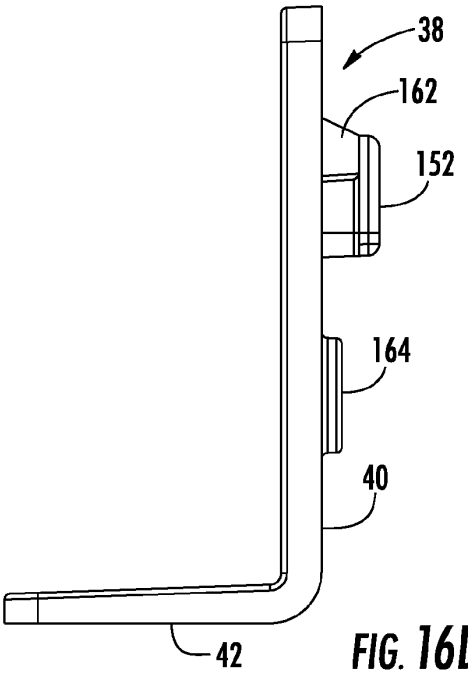

FIG. 16D

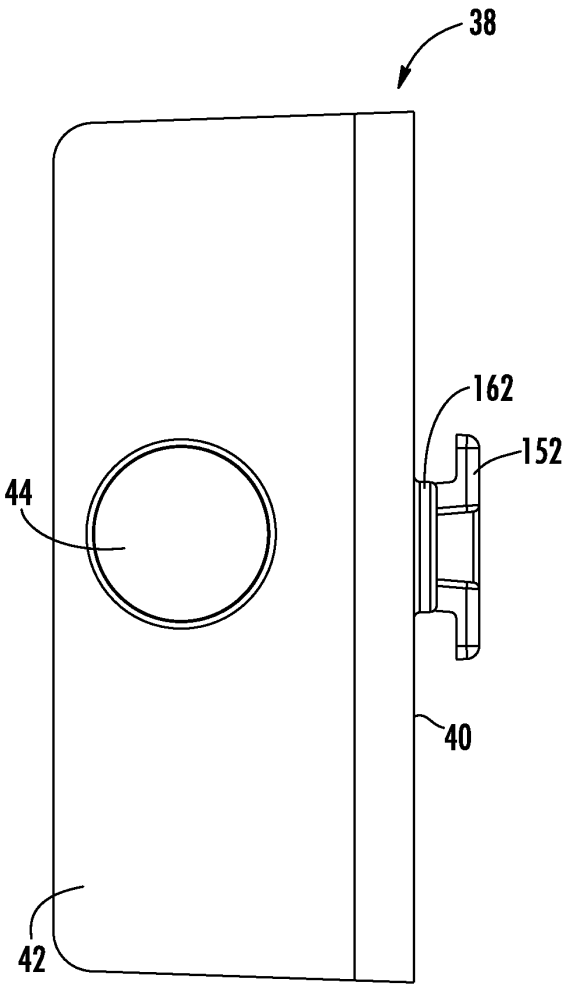

FIG. 16E

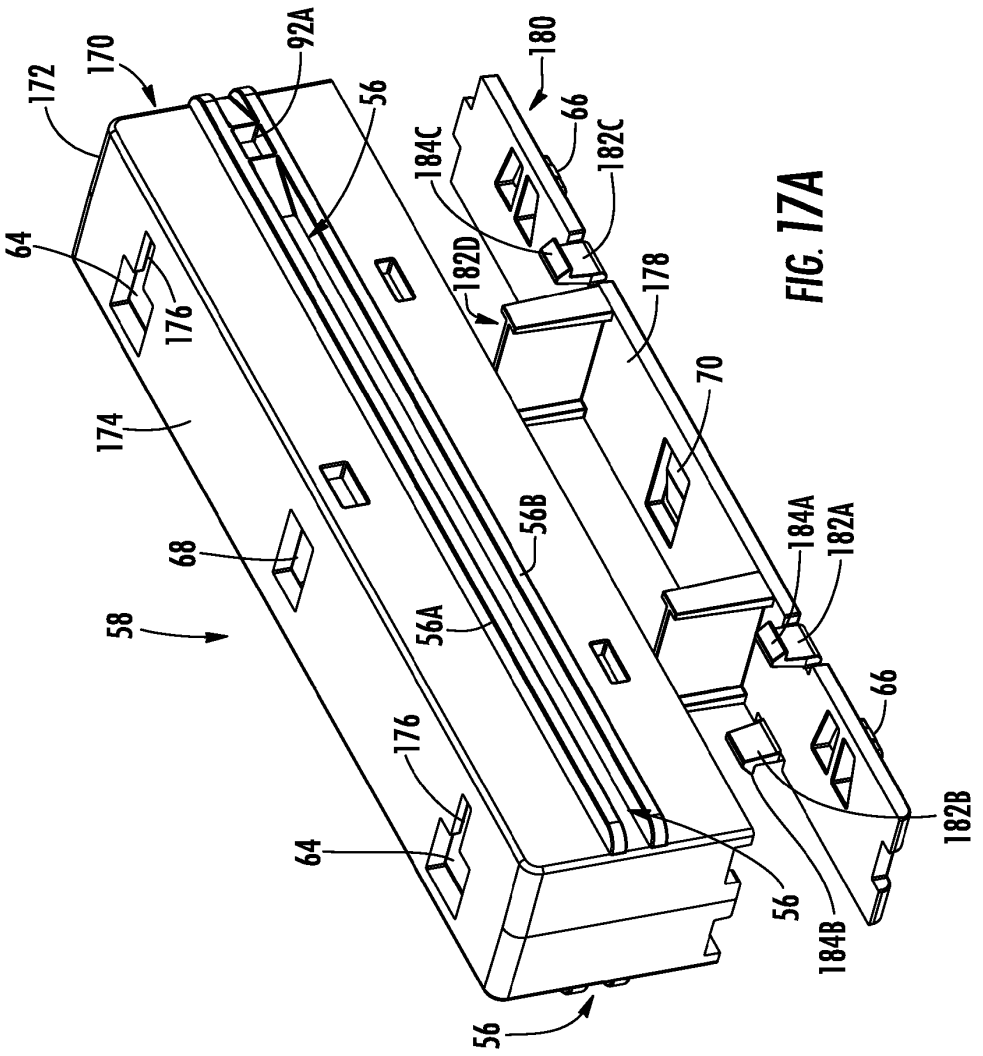
172
170
92A
56
64
176
174
68
58
176
64
56
180
66
184C
182C
182D
178
70
56B
56A
184A
182A
66
182B
184B
56

FIG. 17A

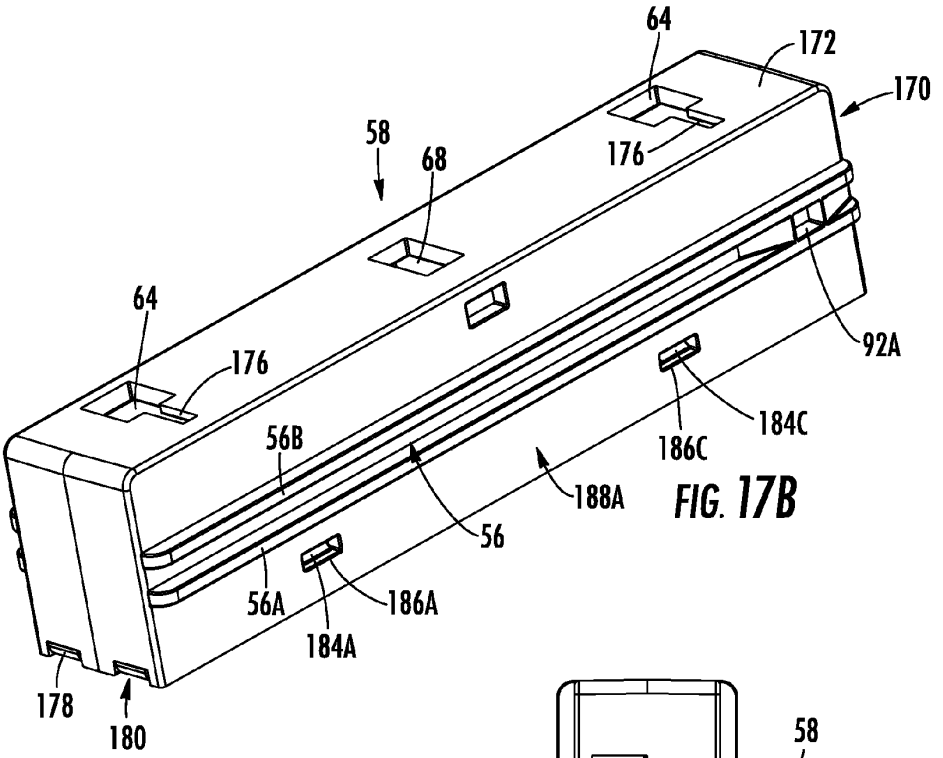

FIG. 17B

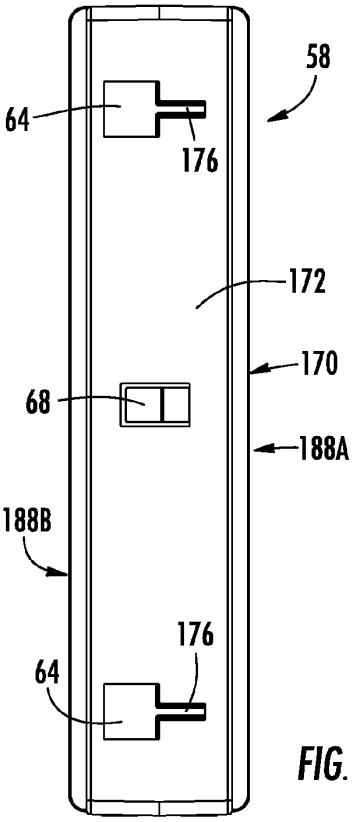

FIG. 17C

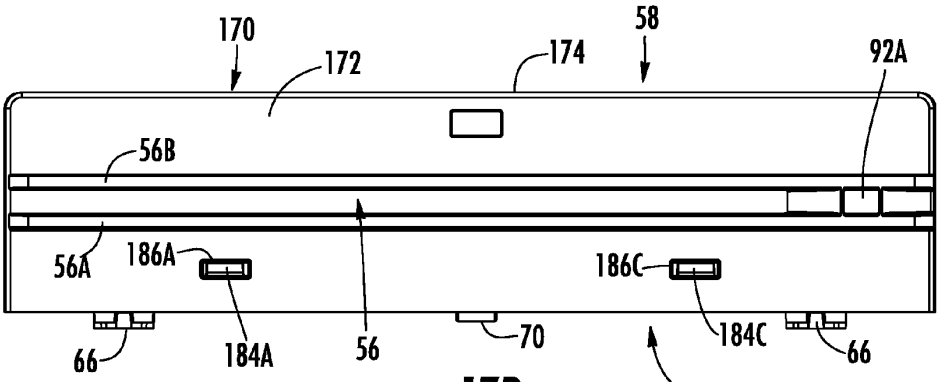

FIG. 17D

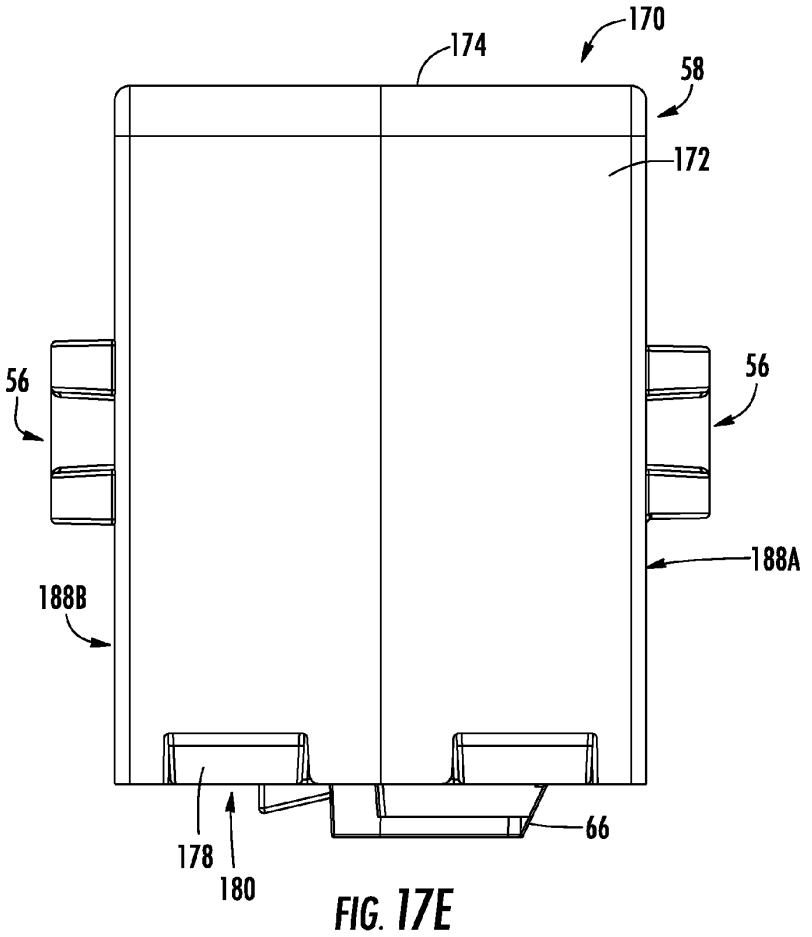

FIG. 17E

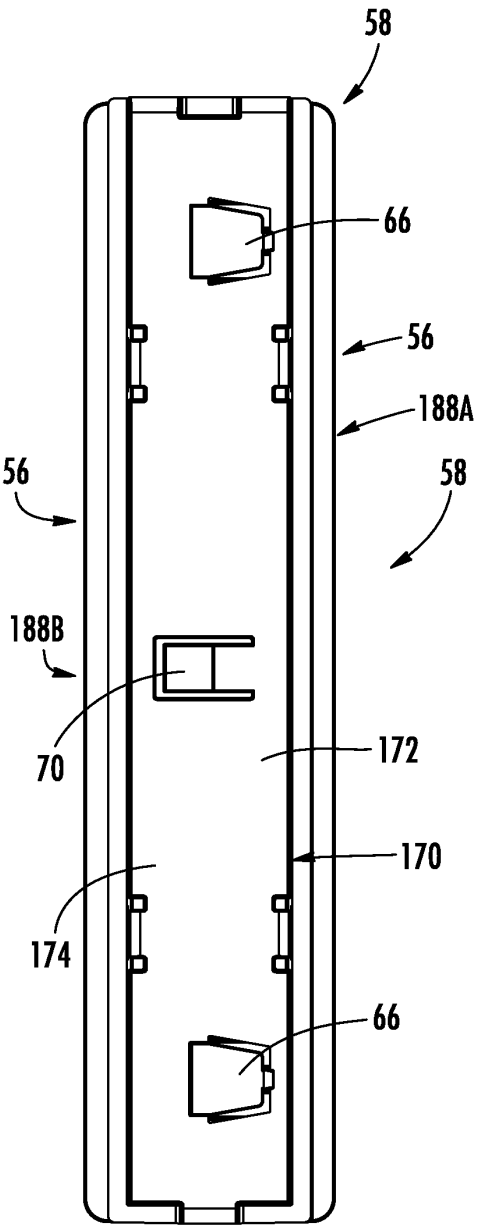

FIG. 17F

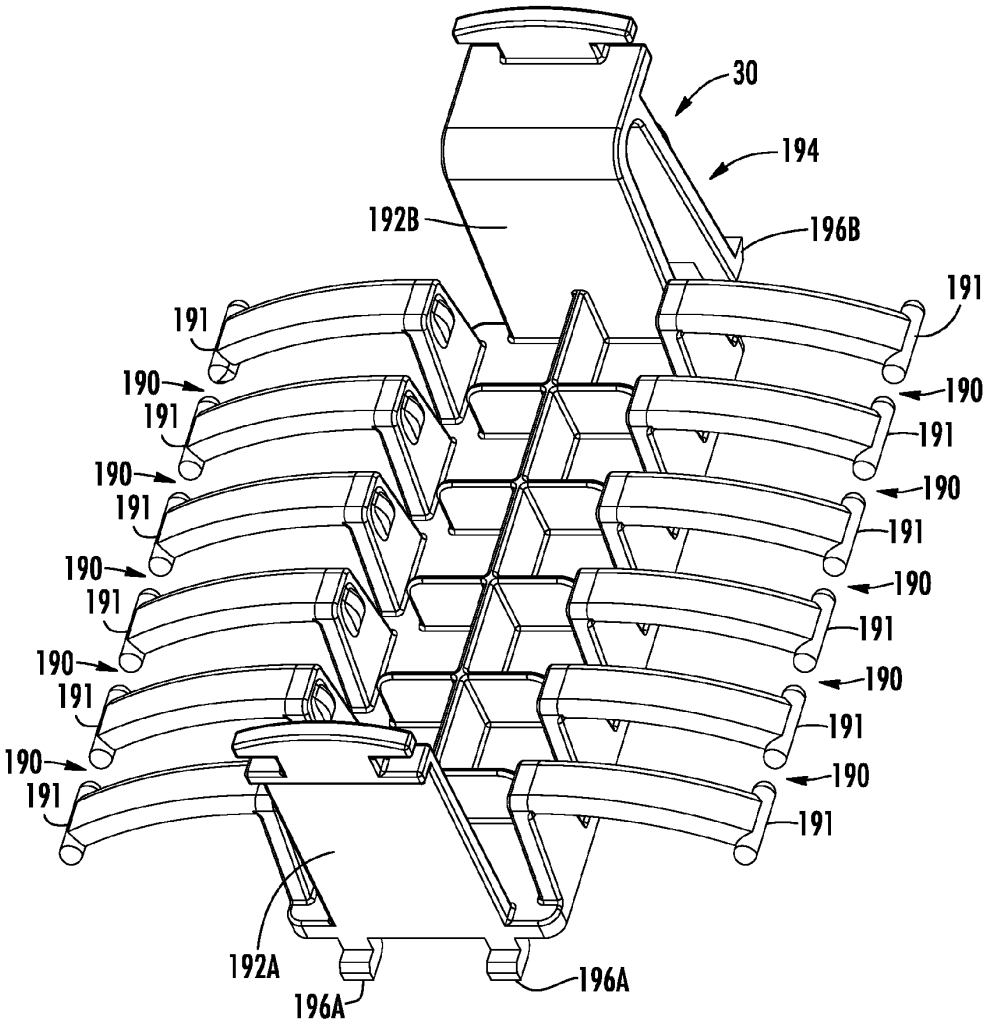
30
194
192B
196B
191
190
191
190
191
190
191
190
191
190
191
190
191
190
191
190
191
192A
196A
196A

FIG. 18A

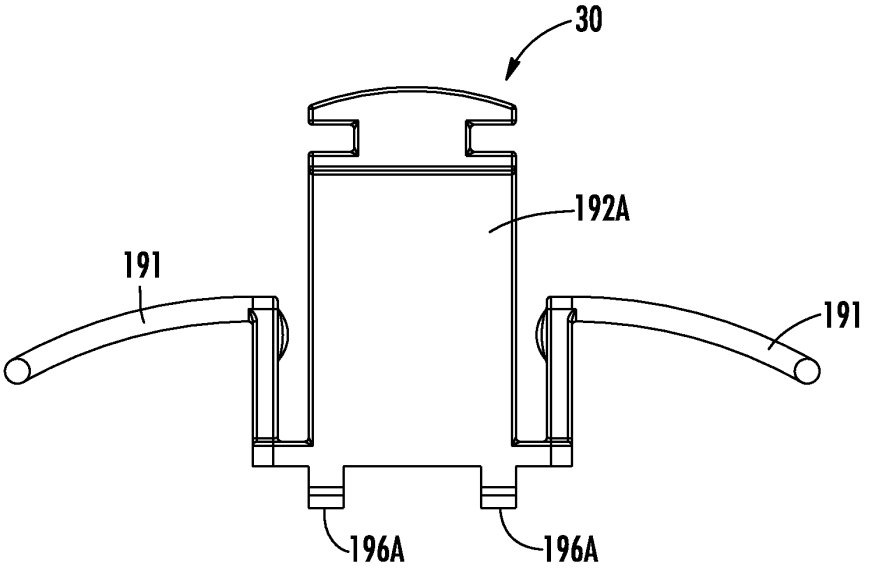

FIG. 18B

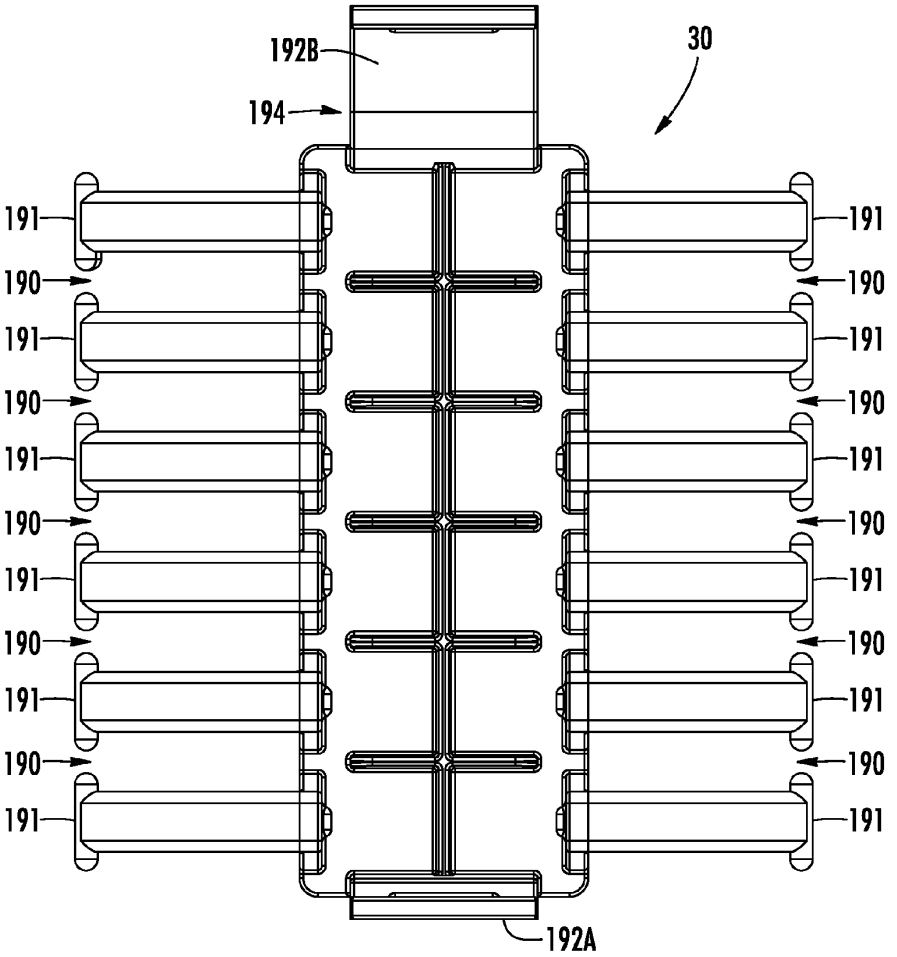
192B
194
30
191
190
191
190
191
190
191
190
191
190
191
190
191
190
191
190
191
192A

FIG. 18C

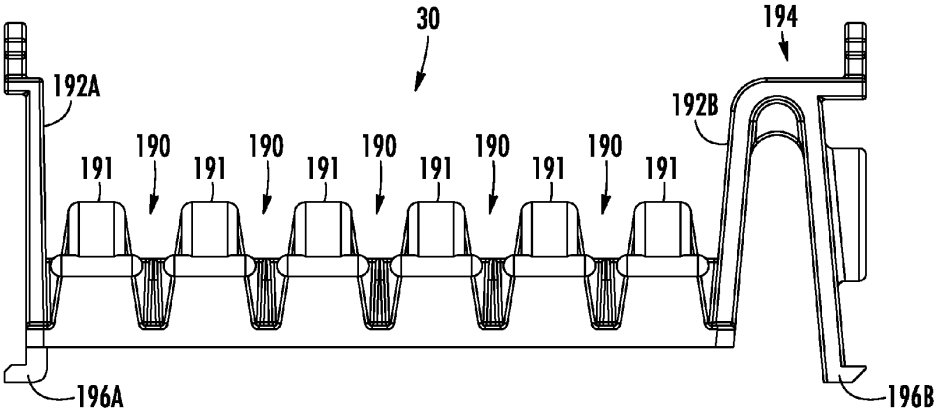
30
194
192A
192B
190
191
190
191
190
191
190
191
190
191
196A
196B

FIG. 18D

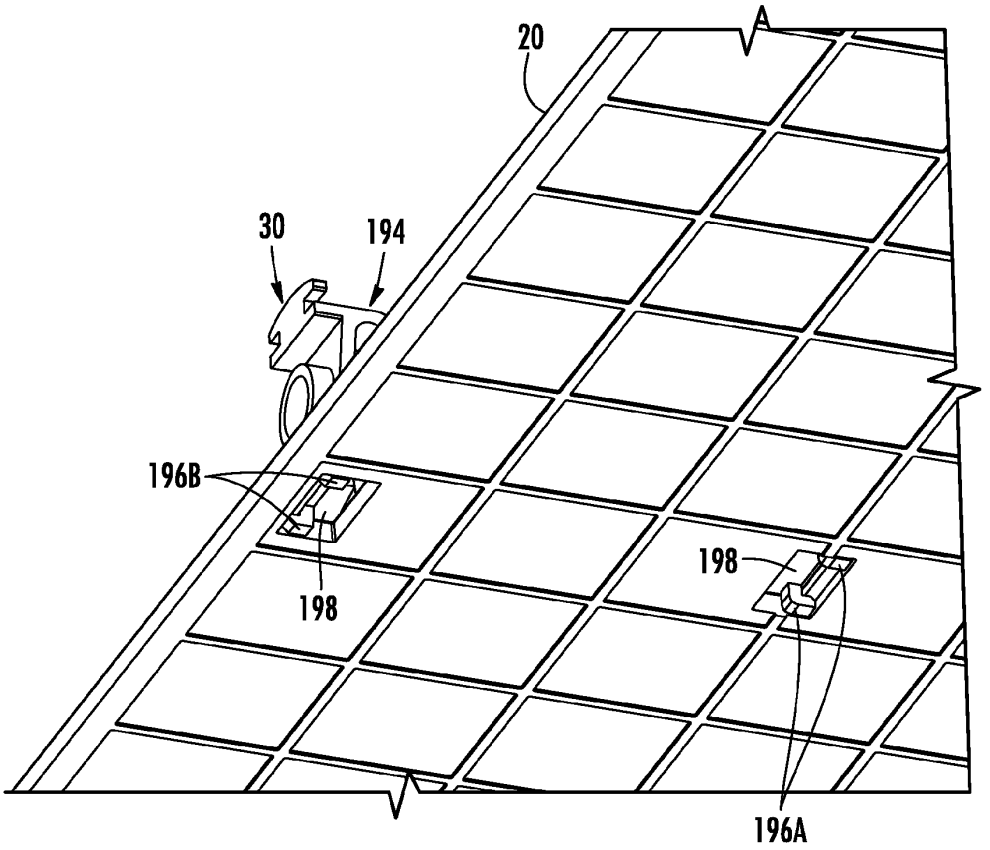

FIG. 19A

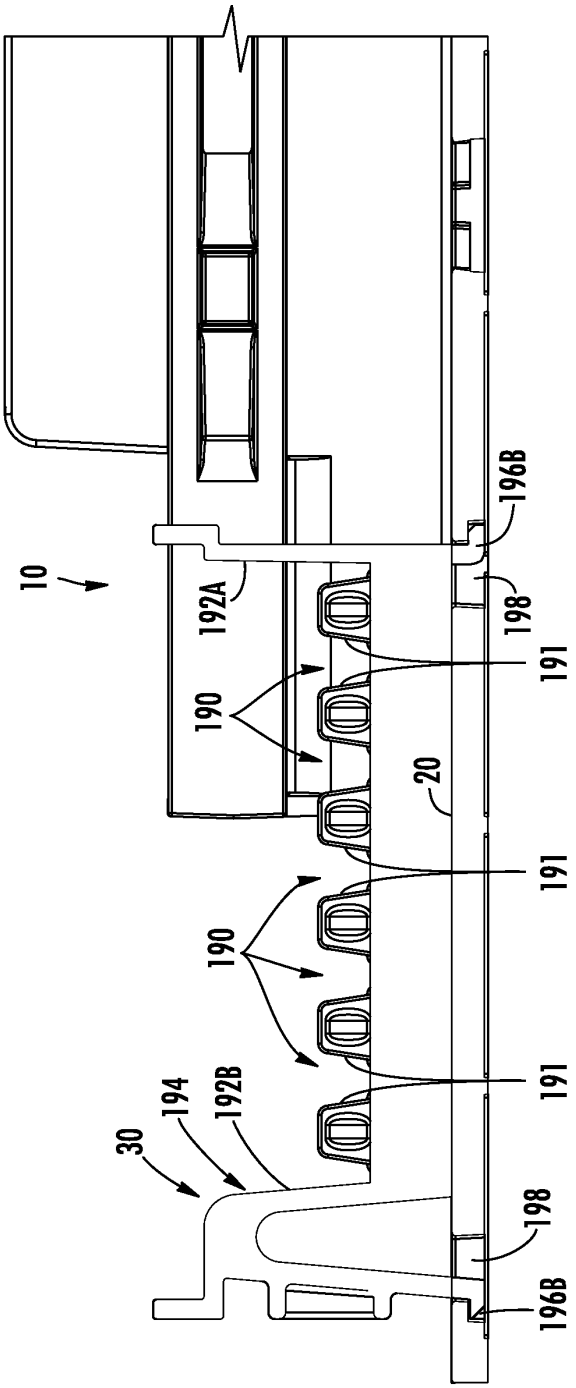

FIG. 19B

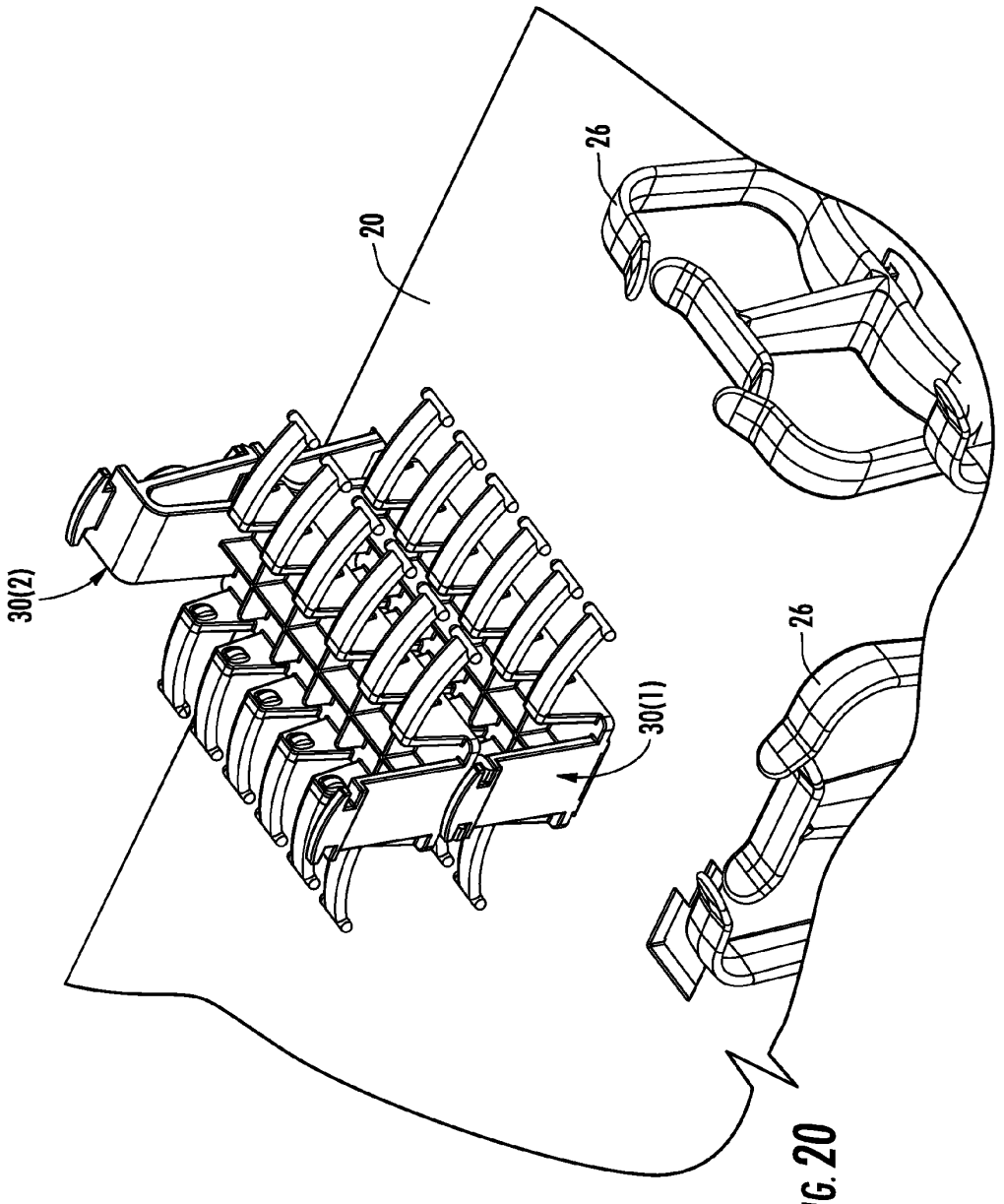

FIG. 20

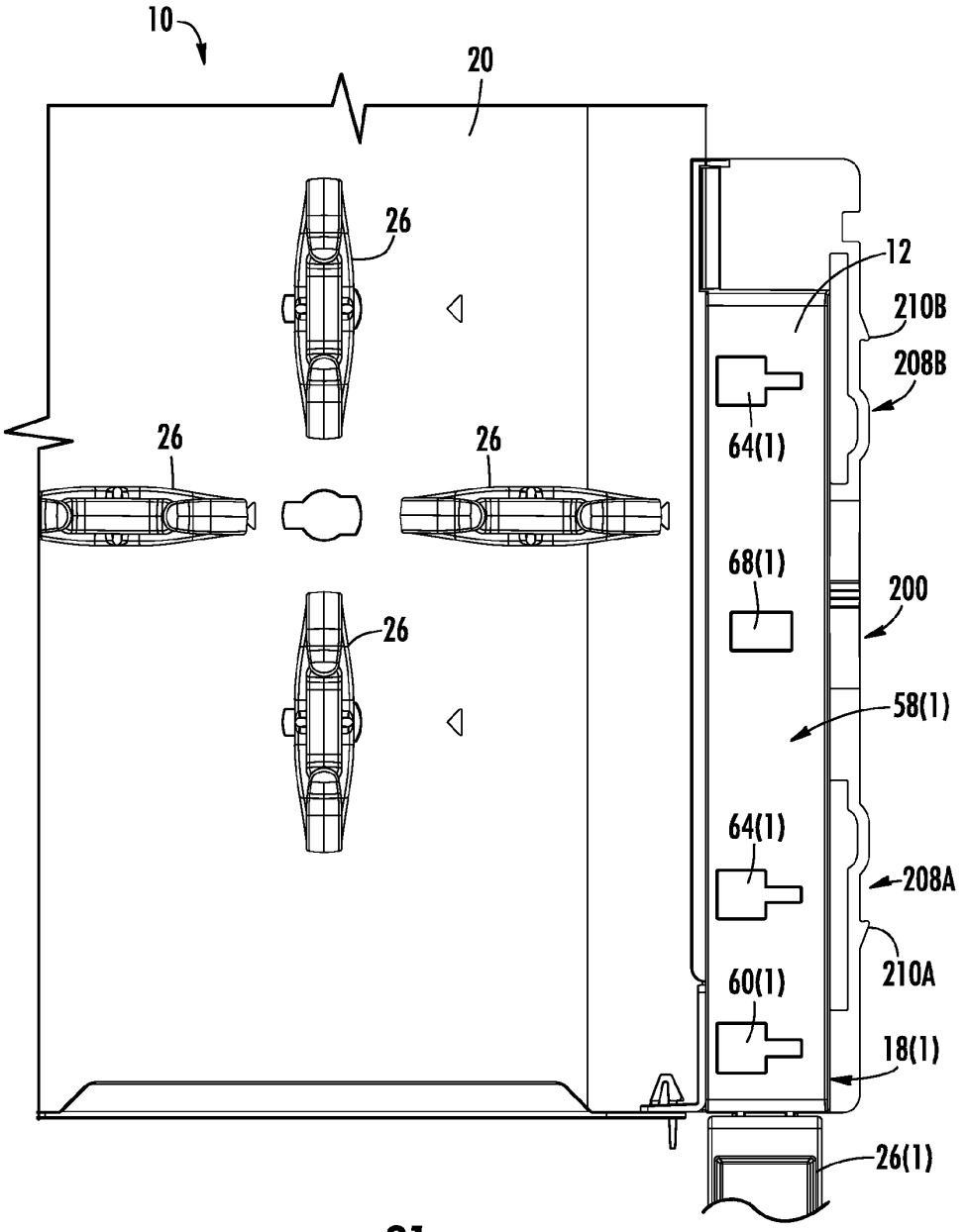
10
20
26
26
26
26
12
210B
208B
64(1)
68(1)
200
58(1)
64(1)
208A
210A
60(1)
18(1)
26(1)

FIG. 21

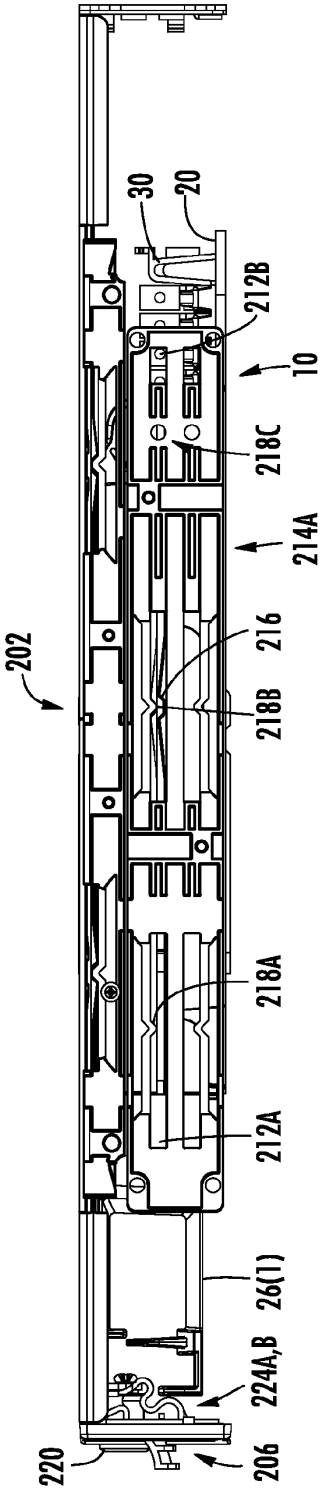
30
20
212B
10
218C
214A
216
202
218B
218A
212A
26(1)
224A,B
220
206

FIG. 22

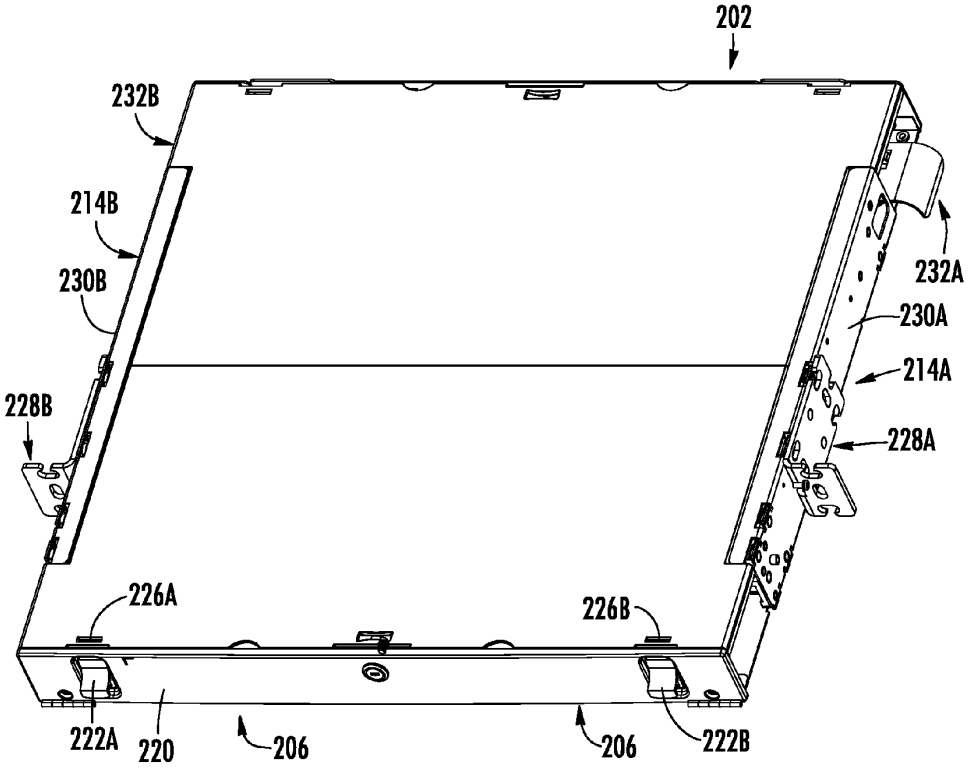
202
232B
214B
230B
228B
232A
230A
214A
228A
226A
226B
222A
220
206
206
222B

FIG. 23

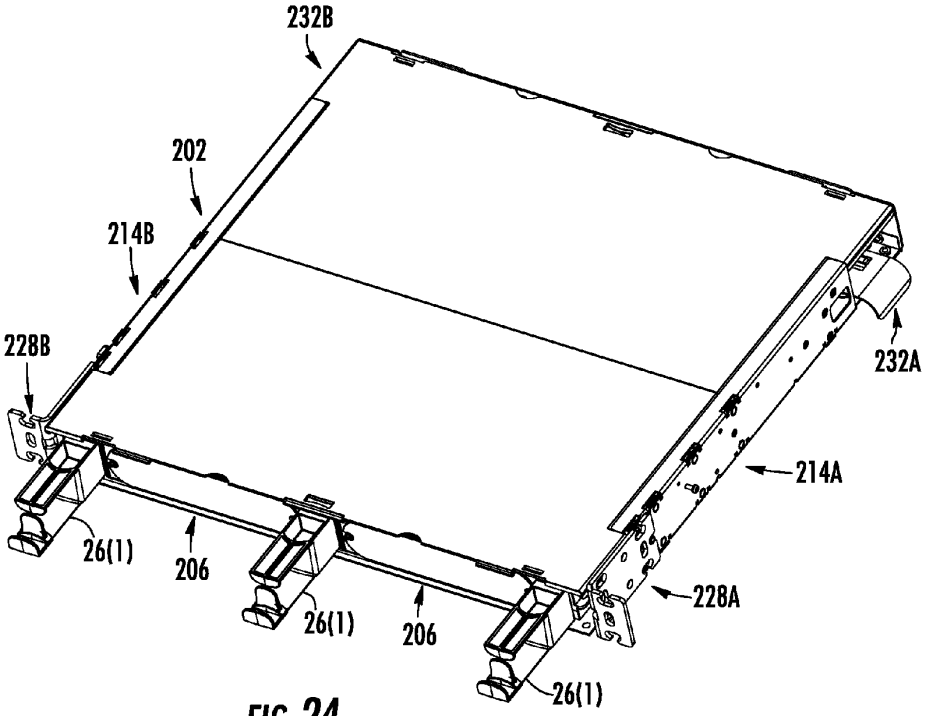

FIG. 24

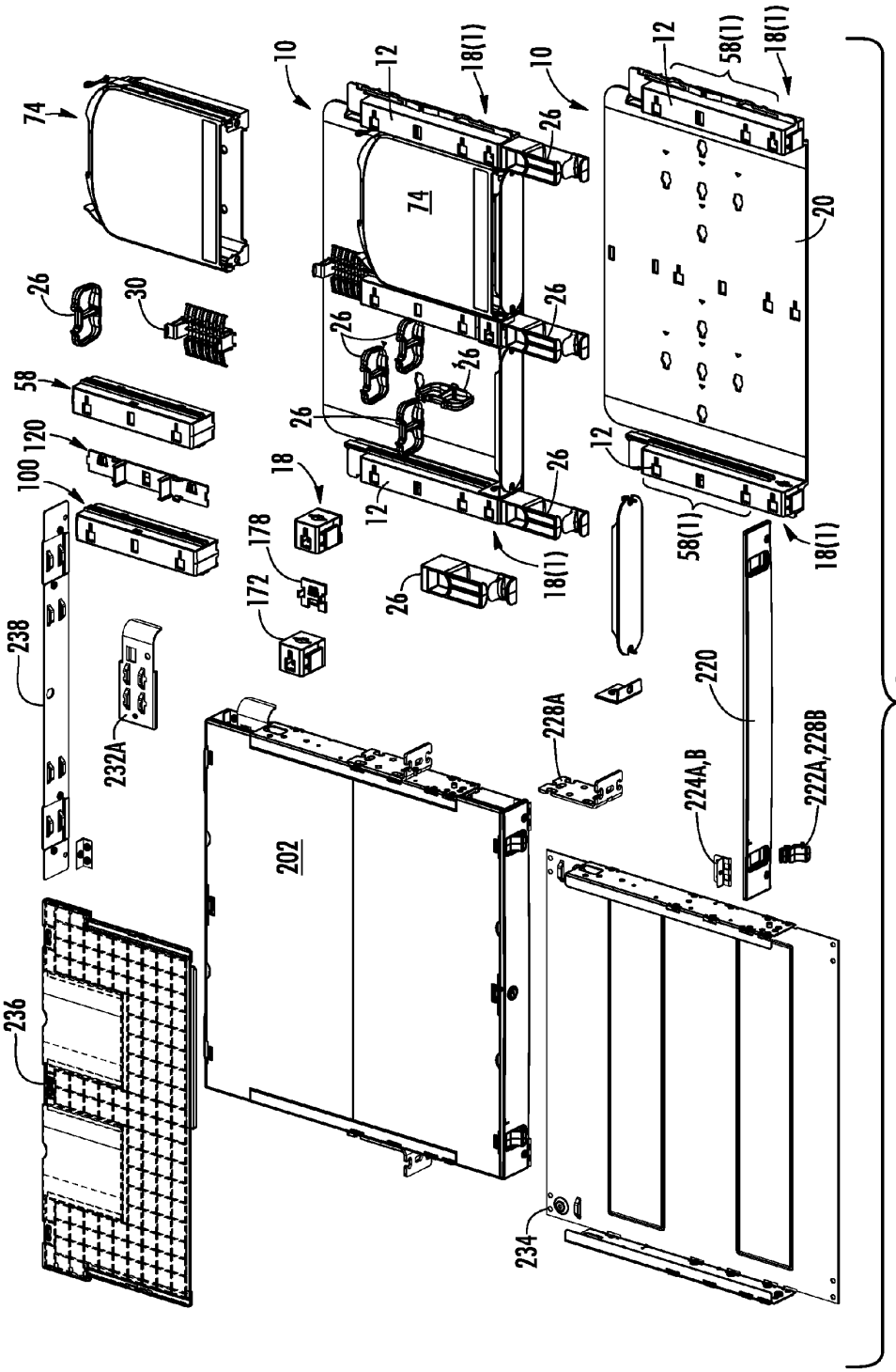
74
26
30
58
120
100
238
232A
236
10
12
18(1)
74
26
18
178
172
202
228A
234
20
58(1)
220
224A,B
222A,228B

FIG. 25

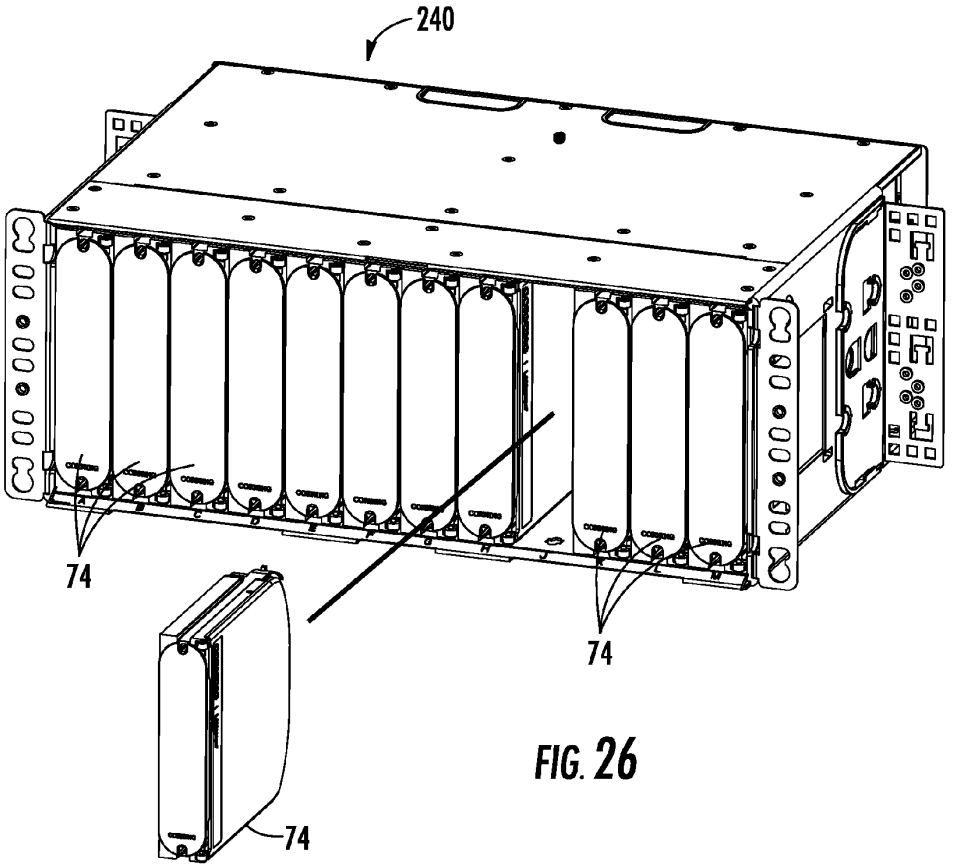

FIG. 26

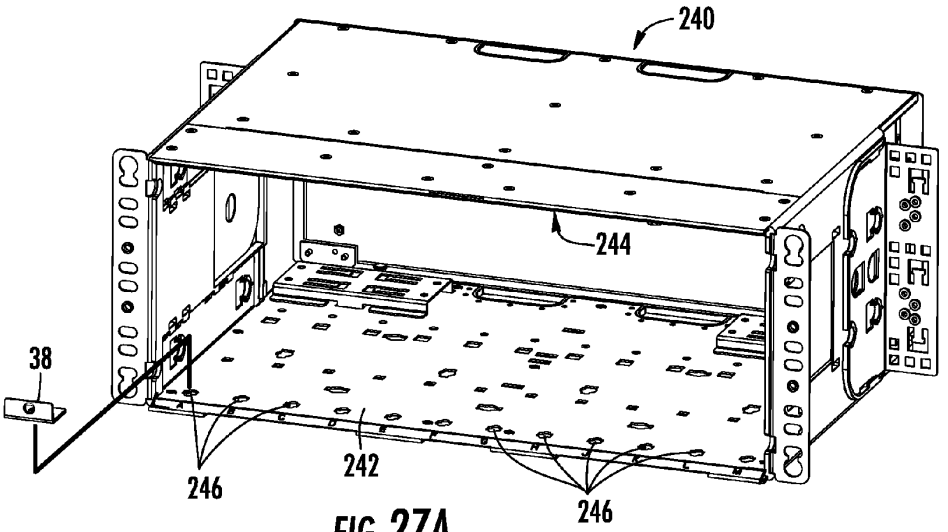

FIG. 27A

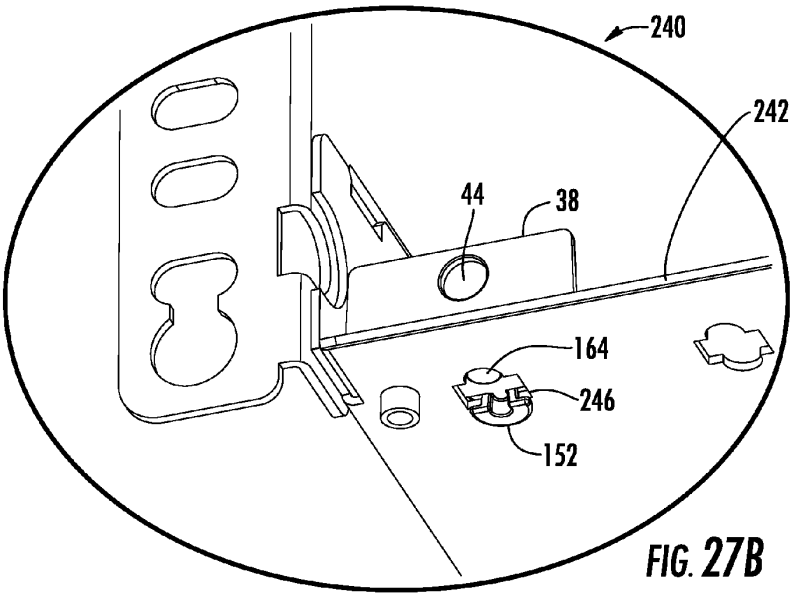

FIG. 27B

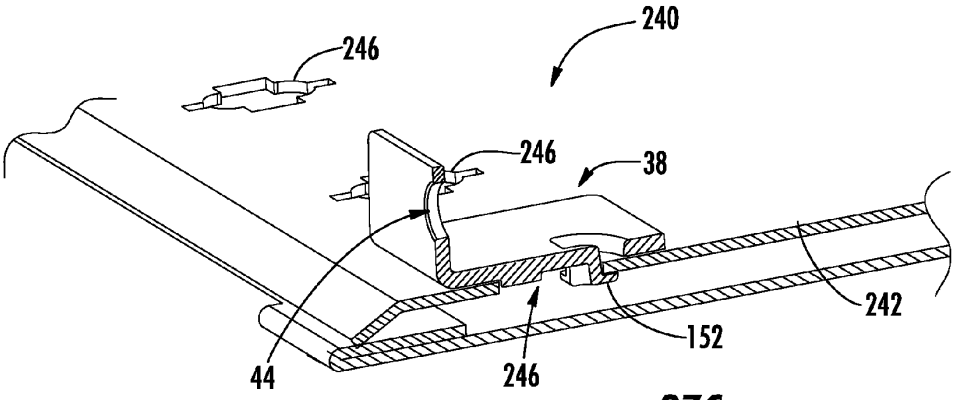

FIG. 27C

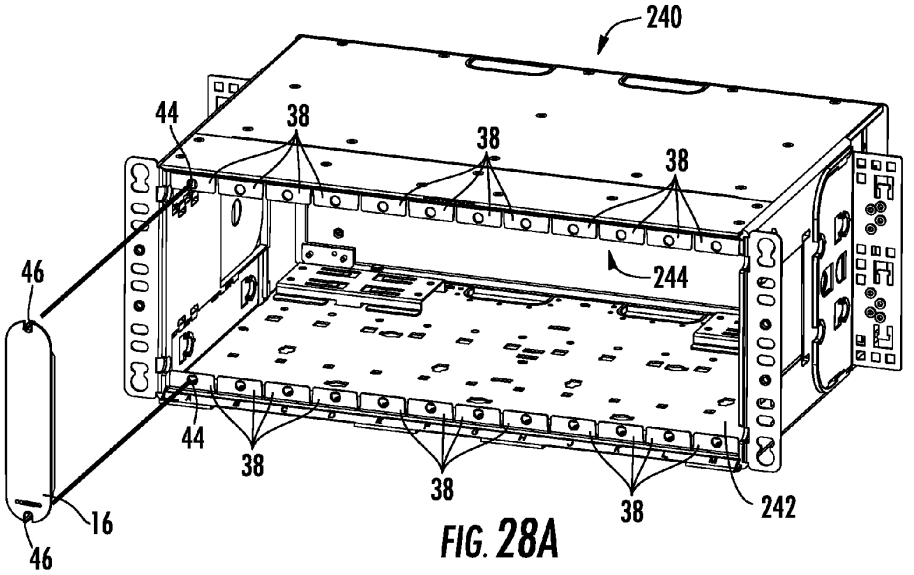

FIG. 28A

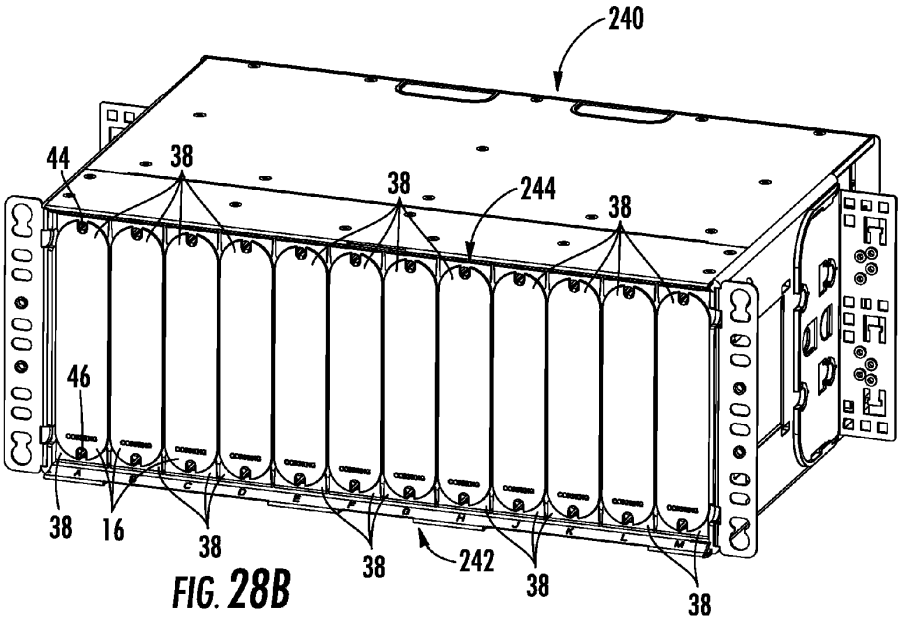

FIG. 28B

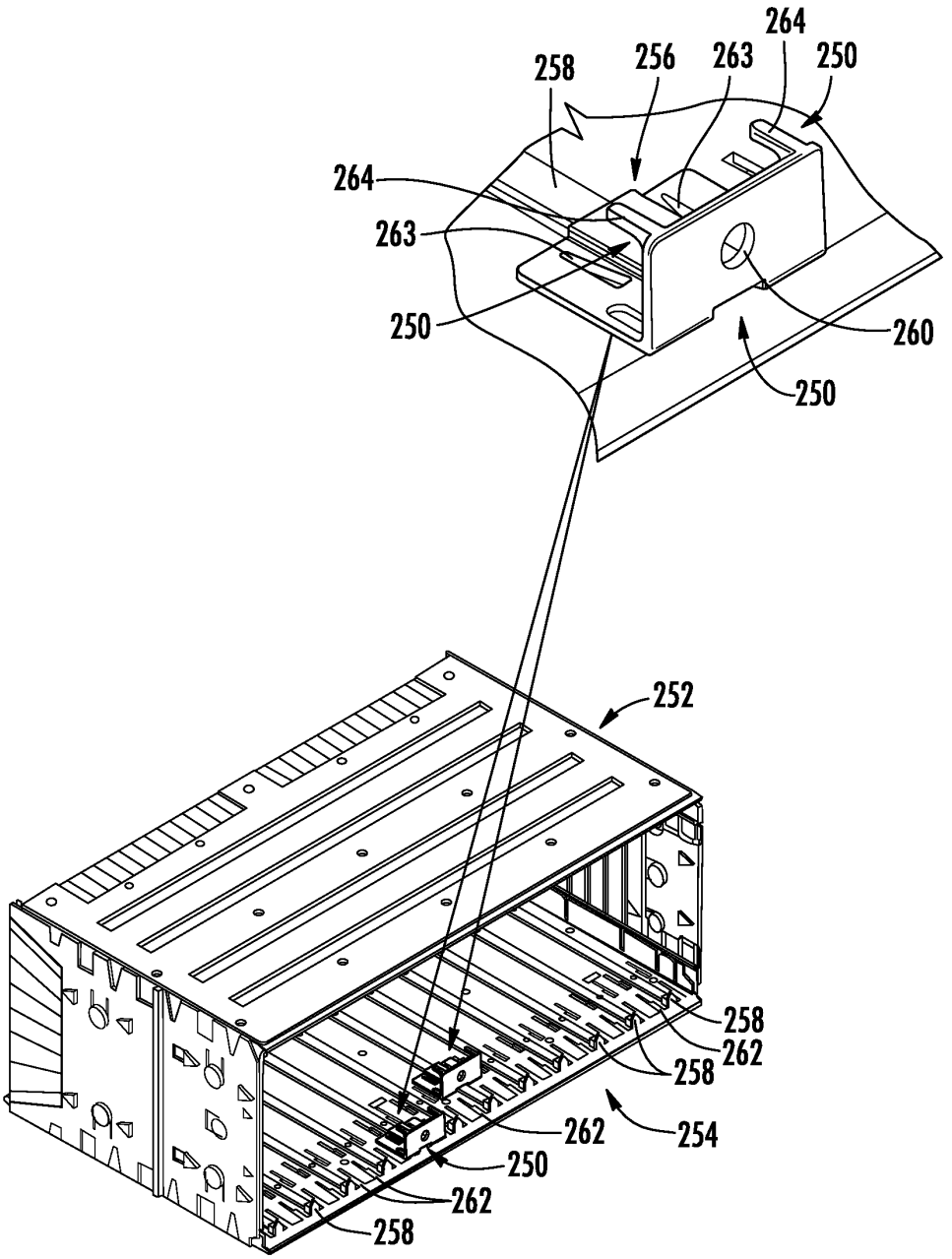
264
258
256
263
250
264
263
250
260
250
252
258
262
258
262
254
250
262
258

FIG. 29

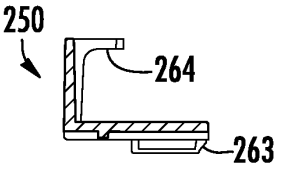

FIG. 30A

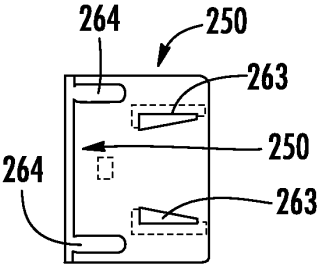

FIG. 30B

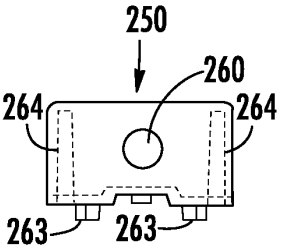

FIG. 30C

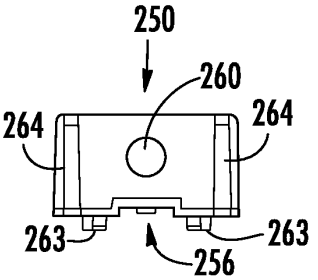

FIG. 30D

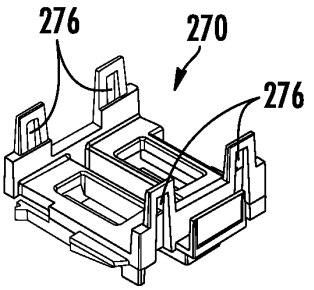

FIG. 31A-1

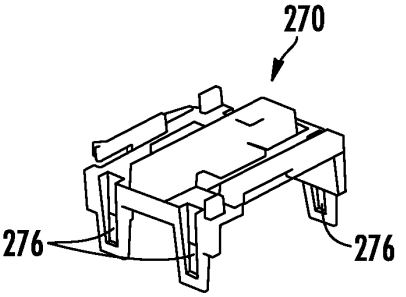

FIG. 31B-1

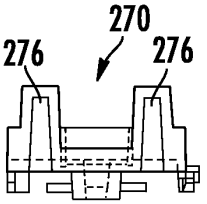

FIG. 31C-1

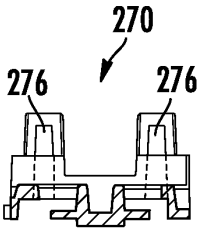

FIG. 31D-1

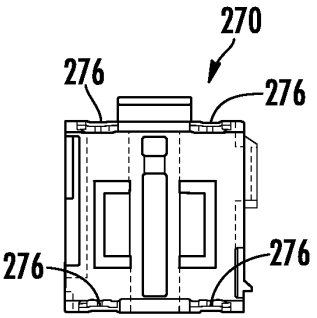

FIG. 31E-1

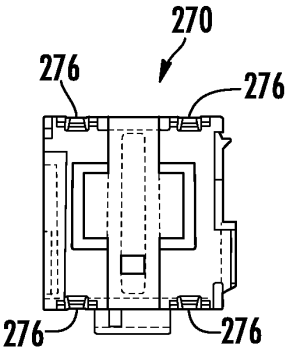

FIG. 31F-1

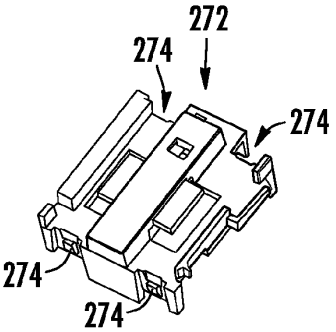

FIG. 31A-2

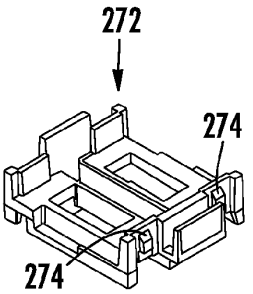

FIG. 31B-2

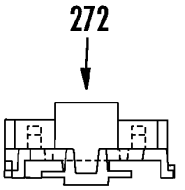

FIG. 31C-2

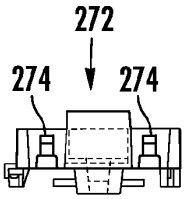

FIG. 31D-2

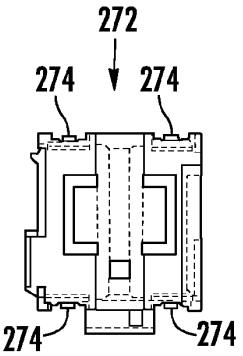

FIG. 31E-2

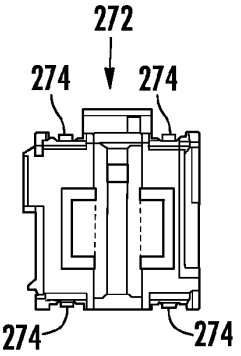

FIG. 31F-2

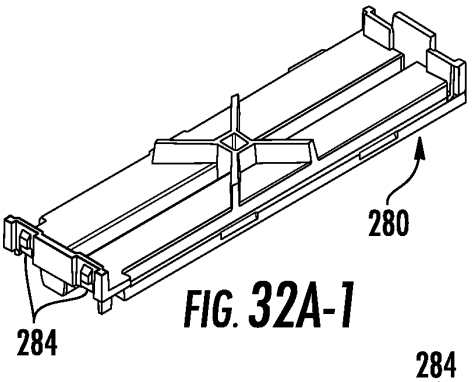

FIG. 32A-1

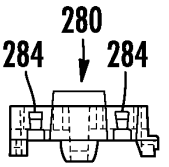

FIG. 32B-1

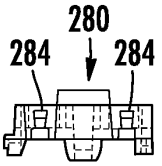

FIG. 32C-1

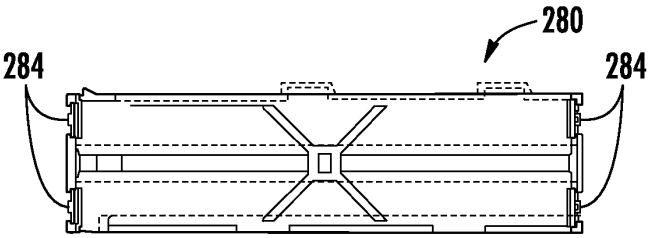

FIG. 32D-1

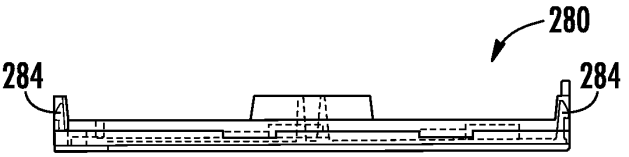

FIG. 32E-1

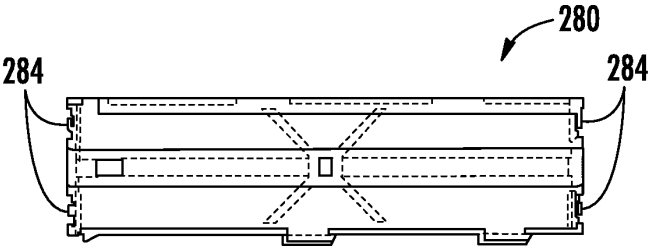

FIG. 32F-1

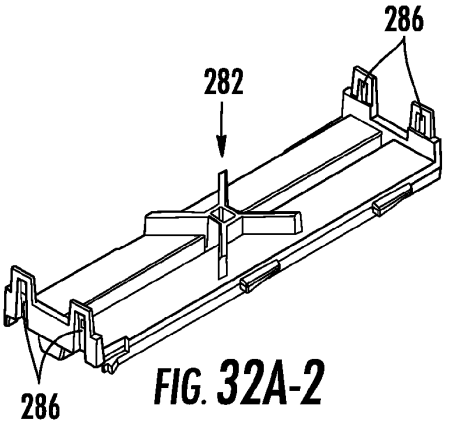

FIG. 32A-2

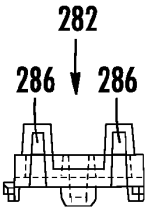

FIG. 32B-2

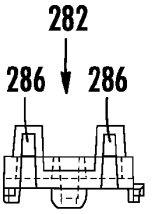

FIG. 32C-2

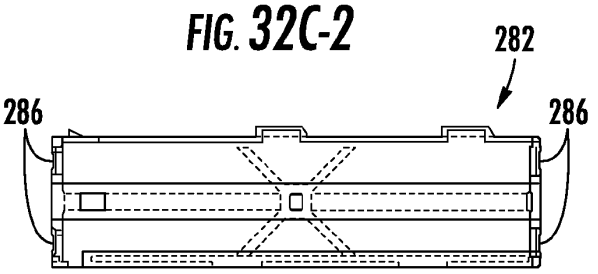

FIG. 32D-2

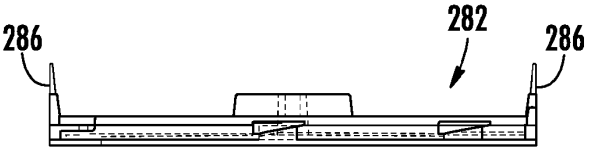

FIG. 32E-2

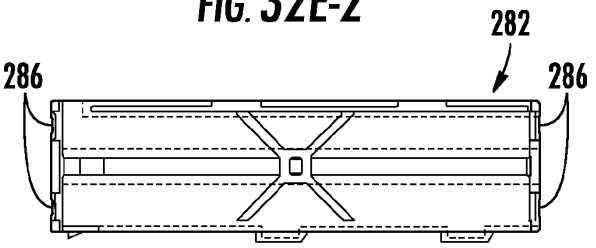

FIG. 32F-2

FIBER OPTIC HOUSINGS CONFIGURED TO ACCOMMODATE FIBER OPTIC MODULES/CASSETTES AND FIBER OPTIC PANELS, AND RELATED COMPONENTS AND METHODS

RELATED APPLICATIONS

The present application claims priority to U.S. Provisional Patent Application Ser. No. 61/329,925, filed Apr. 30, 2010, entitled "Fiber Optic Housing Adapted to Accommodate Both Modules and Panels," the disclosure of which is relied upon and incorporated herein by reference in its entirety.

The present application is related to U.S. Provisional Patent Application Ser. No. 61/329,948, filed Apr. 30, 2010, entitled "Stackable Shelf For A Fiber Optic Housing," the disclosure of which is relied upon and incorporated herein by reference in its entirety.

The present application is also related to U.S. patent application Ser. No. 12/940,699, filed Nov. 5, 2010, entitled "Stackable Shelves For A Fiber Optic Housing, and Related Components and Methods," the disclosure of which is relied upon and incorporated herein by reference in its entirety.

The present application is also related to U.S. Provisional Patent Application Ser. No. 61/329,898, filed Apr. 30, 2010, entitled "Rotatable Routing Guide Assembly," the disclosure of which is relied upon and incorporated herein by reference in its entirety.

The present application is also related to U.S. Provisional Patent Application Ser. No. 61/332,572, filed May 7, 2010, entitled "Fiber Optic Housing," the disclosure of which is relied upon and incorporated herein by reference in its entirety.

The present application is also related to U.S. Provisional Patent Application Ser. No. 61/332,548, filed May 7, 2010, entitled "Attachment Housing For A Fiber Optic Housing," the disclosure of which is relied upon and incorporated herein by reference in its entirety.

The present application is also related to U.S. Provisional Patent Application Ser. No. 61/332,529, filed May 7, 2010, entitled "Fiber Optic Management Area In A Fiber Optic Housing," the disclosure of which is relied upon and incorporated herein by reference in its entirety.

The present application is also related to U.S. Provisional Patent Application Ser. No. 61/332,508, filed May 7, 2010, entitled "Grommet and Routing Clip Assembly," the disclosure of which is relied upon and incorporated herein by reference in its entirety.

The present application is also related to U.S. Provisional Patent Application Ser. No. 61/180,331, filed May 21, 2009, entitled "Fiber Optic Equipment Guides and Rails Configured With Stopping Position(s), and Related Equipment," the disclosure of which is relied upon and incorporated herein by reference in its entirety.

The present application is also related to U.S. patent application Ser. No. 12/576,806, filed Oct. 9, 2009, entitled "Fiber Optic Equipment Guides and Rails Configured With Stopping Position(s), and Related Equipment and Methods," the disclosure of which is relied upon and incorporated herein by reference in its entirety.

BACKGROUND

1. Field of the Disclosure

The technology of the disclosure relates to fiber optic hardware, and more particularly to fiber optic housings suitable for supporting fiber optic equipment, including fiber optic modules/cassettes and fiber optic panels.

2. Technical Background

Benefits of optical fiber include extremely wide bandwidth and low noise operation. Because of these advantages, optical fiber is increasingly being used for a variety of applications, including but not limited to broadband voice, video, and data transmission. Fiber optic networks employing optical fiber are being developed and used to deliver voice, video, and data transmissions to subscribers over both private and public networks. These fiber optic networks often include separated connection points linking optical fibers to provide "live fiber" from one connection point to another connection point. In this regard, fiber optic equipment is located in data distribution centers or central offices to support interconnections.

The fiber optic equipment is customized based on the application need. The fiber optic equipment is typically included in housings designed to support the fiber optic equipment, which are mounted in equipment racks to optimize use of space. One example of such fiber optic equipment is a fiber optic module. A fiber optic module is designed to provide cable-to-cable fiber optic connections and manage the polarity of fiber optic cable connections. A fiber optic module is mounted to a chassis or housing that is specifically designed to support fiber optic modules/cassettes. Another example of such fiber optic equipment is a fiber optic panel (also referred to as a "patch panel"). A fiber optic panel is designed to provide connection or termination points for optical fiber. A fiber optic panel typically includes fiber optic adapters that are configured to receive fiber optic connectors connected to the optical fiber to be connected or terminated. A fiber optic panel is typically mounted to a chassis or housing that is specifically designed to support fiber optic panels.

The need for particular fiber optic equipment may change. For example, it may be needed or desired to provide additional fiber optic panels at a data distribution center to support a fiber optic network. In this regard, housings specifically configured to support the additional fiber optic panels are provided and installed in available space in equipment racks at the data distribution center. If additional fiber optic modules/cassettes are needed at a data distribution center, housings specifically configured to support additional fiber optic modules or cassettes are provided and installed in available space in equipment racks at the data distribution center. However in these examples, the correct housing type to support the specific additional fiber optic equipment needed may not be readily available thus delaying installations and/or reconfigurations. Even if the correct housing types are readily available, they come at additional cost and requirements for inventory space to store the different types of housings needed to support the different types of fiber optic equipment that may be added or reconfigured. Further, the available space in an equipment rack for supporting additional fiber optic equipment may only be present in existing installed housings that are not fully populated. However, the housings with available space may not be configured to support the particular type of fiber optic equipment to be added.

SUMMARY OF THE DETAILED DESCRIPTION

Embodiments disclosed in the detailed description include fiber optic housings configured to accommodate fiber optic modules/cassettes and fiber optic panels, and related components and methods. In one embodiment, a fiber optic apparatus is provided. The fiber optic apparatus is comprised of a fiber optic housing. The fiber optic apparatus is also comprised of one or more removable panel clips disposed in the

fiber optic housing. Each of the one or more removable panel clips includes at least one receptacle configured to receive an insert of a fiber optic panel to support the fiber optic panel in the fiber optic housing.

In another embodiment, a fiber optic housing comprising a stackable shelf, a panel clip, a front stacker assembly, and a rear stacker assembly is provided. The panel clip, the front stacker assembly, and the rear stacker assembly removably attach to the stackable shelf to allow the stackable shelf to accommodate one or both of a fiber optic module and a fiber optic panel interchangeably. The panel clip serves as an adapter piece, which allows an insert, such as a plunger for plunger-style panels, to be used where a track or rail guide system or method of retention is used. The front stacker assembly and the rear stacker assembly allow a rail guide or track-type fiber optic module to be used in a housing that accommodates fiber optic panels, including plunger-style fiber optic panels.

In another embodiment, a method of supporting fiber optic panels in a fiber optic housing also configured to support fiber optic modules is provided. The method comprises attaching a removable panel clip that includes at least one receptacle in a fiber optic housing that is configured to support fiber optic modules. The method also comprises inserting a fiber optic panel in the fiber optic housing such that at least one insert of the fiber optic panel is aligned with the at least one receptacle. The method also comprises inserting the at least one insert into the at least one receptacle to support the fiber optic panel in the fiber optic housing.

In another embodiment, a fiber optic shelf configured to be supported in a fiber optic housing is provided. The fiber optic shelf comprises a mounting surface. The fiber optic shelf is also comprised of one or more removable panel clips attached to the mounting surface. Each of the one or more removable panel clips includes at least one receptacle configured to receive an insert of a fiber optic panel to support the fiber optic panel in the mounting surface.

In another embodiment, a method of supporting fiber optic panels in a fiber optic housing configured to support fiber optic modules is provided. The method comprises attaching a removable panel clip that includes at least one receptacle in a mounting surface configured to support fiber optic modules. The method also comprises inserting a fiber optic panel in the mounting surface such that at least one insert of the fiber optic panel is aligned with the at least one receptacle. The method also comprises inserting the at least one insert into the at least one receptacle to support the fiber optic panel in the mounting surface.

Additional features and advantages will be set forth in the detailed description which follows, and in part will be readily apparent to those skilled in the art from that description or recognized by practicing the embodiments as described herein, including the detailed description that follows, the claims, as well as the appended drawings.

It is to be understood that both the foregoing general description and the following detailed description present embodiments, and are intended to provide an overview or framework for understanding the nature and character of the disclosure. The accompanying drawings are included to provide a further understanding, and are incorporated into and constitute a part of this specification. The drawings illustrate various embodiments, and together with the description serve to explain the principles and operation of the concepts disclosed.

BRIEF DESCRIPTION OF THE FIGURES

FIGS. **1**A-**1**C are perspective, front, and side views, respectively, of an exemplary stackable shelf that can be movably inserted in a fiber optic housing and configured with stacker assemblies to support fiber optic equipment of height spaces;

FIGS. **2**A-**2**C are perspective, top, and front views, respectively, of the stackable shelf in FIGS. **1**A-**1**C supporting fiber optic panels configured with stacker assemblies to support fiber optic panels in a 1-U height space;

FIG. **2**D is a perspective view of the stackable shelf configured with removable stacker assemblies to support fiber optic panels in a 1 U height space in FIGS. **2**A-**2**C, with optical fibers routed through rear routing guides secured to the stackable shelf and terminated to the rear of fiber optic adapters disposed in the fiber optic panels;

FIG. **3**A is a perspective view of the stackable shelf in FIGS. **2**A-**2**C, but configured with elongated fiber routing guides attached to the stacker assemblies;

FIG. **3**B is a perspective view of an alternative stackable shelf with rear routing guides secured to the stackable shelf and rotated approximately forty-five (45) degrees from the rear routing guides disposed in the stackable shelf in FIG. **3**A;

FIG. **4** is a perspective view of the stackable shelf in FIGS. **1**A-**2**D without any fiber optic equipment installed therein;

FIG. **5**A is a bottom close-up perspective view of a front removable stacker assembly installed and secured to the stackable shelf in FIG. **4**;

FIG. **5**B is a top perspective view of the stackable shelf in FIG. **4** with the front removable stacker assembly in FIG. **5**A attached to the mounting surface to support fiber optic panels in a 1 U height space;

FIG. **5**C is a bottom close-up perspective view of a rear removable stacker assembly installed and secured to the stackable shelf in FIG. **4**;

FIG. **5**D is a top perspective view of the stackable shelf in FIG. **4** configured with the front removable stacker assembly and rear removable stacker assembly in FIG. **5**C attached to the mounting surface to support fiber optic modules in a 1-U height space;

FIGS. **6**A and **6**B are perspective and side views, respectively, of the stackable shelf in FIGS. **1**A-**2**D including front and rear removable stacker assemblies installed in the stackable shelf and supporting a fiber optic panel and a fiber optic module;

FIGS. **6**C and **6**D are front perspective and top views, respectively, of an exemplary fiber optic module that can be supported by the rear stacker assemblies installed in the stackable shelf in FIG. **4**, as illustrated in FIGS. **6**A and **6**B;

FIG. **7** is a perspective view of the stackable shelf in FIGS. **1**A-**2**D including front and rear removable stacker assemblies to support two fiber optic modules in a 1 U height space;

FIGS. **8**A-**8**C are perspective, front, and rear views, respectively, of the stackable shelf in FIGS. **1**A-**2**D including an additional front removable stacker assemblies to support fiber optic panels in a 2 U height space;

FIG. **9** is a perspective view of the stackable shelf in FIGS. **1**A-**2**D configured with removable stacker assemblies to support an additional fiber optic panel and additional fiber optic module in a 2 U height space;

FIG. **10** is a perspective view of the stackable shelf in FIGS. **1**A-**2**D configured with removable stacker assemblies to support additional fiber modules in a 2 U height space;

FIG. **11** is a perspective view of the stackable shelf in FIGS. **1**A-**2**D configured with removable stacker assemblies to support additional fiber modules in a 3 U height space;

FIGS. **12**A-**12**F are perspective exploded, assembled perspective, front, side, bottom, and top views, respectively, of a front removable stacker assembly;

FIG. **13** is a perspective view of an exemplary front routing guide in FIGS. **1**A-**2**D positioned to be secured to the front stacker assembly in FIGS. **12**A-**12**F installed in the stackable shelf of FIG. **4**;

FIGS. **14**A and **14**B are side and rear views, respectively, of a front fiber routing guide that attaches to the front stacker assembly illustrated in FIG. **13**;

FIGS. **15**A and **15**B are perspective and side views, respectively, of the front stacker assembly in FIGS. **12**A-**12**F with an exemplary removable panel clip secured thereto to support securing fiber optic panels to the stackable shelf in FIG. **4**;

FIGS. **16**A-**16**E are perspective, right side, left side, top, and front views, respectively, of the removable panel clip;

FIGS. **17**A-**17**F are exploded perspective, assembled perspective, top, side, front, and bottom views, respectively, of a rear removable stacker assembly;

FIGS. **18**A-**18**D are perspective, front, top, and side views, respectively, of the fiber body holder in FIGS. **1**A-**2**D;

FIG. **19**A is a bottom close-up view of the fiber body holder in FIGS. **18**A-**18**D installed and secured to the stackable shelf in FIG. **4**;

FIG. **19**B is a side view of the fiber body holder in FIGS. **18**A-**18**D installed and secured to the stackable shelf in FIG. **4**;

FIG. **20** is a perspective view of a second fiber body holder stacked on top of a first body holder in FIGS. **18**A-**18**D installed and secured to the stackable shelf in FIG. **4**;

FIG. **21** is a top close-up view of the right side of the stackable shelf illustrating an exemplary rail system configured to allow the stackable shelf to be secured in a fiber optic housing;

FIG. **22** is a side view of the right side, transparent view of the stackable shelf of FIGS. **1**A-**2**D installed in an exemplary fiber optic housing;

FIG. **23** is a perspective view of the fiber optic housing that includes the stackable shelf in FIG. **22** with mounting brackets installed in a rear position of the fiber optic housing;

FIG. **24** is a perspective view of the fiber optic housing that includes the stackable shelf in FIG. **22** with mounting brackets installed in a front position on the fiber optic housing;

FIG. **25** includes perspective views of exemplary components used to provide a stackable shelf supporting fiber optic equipment in a fiber optic housing according to certain embodiments disclosed herein;

FIG. **26** is a perspective view of an alternative fiber optic housing configured to support fiber optic modules and fiber optic panels in a vertical orientation;

FIGS. **27**A-**27**C are perspective, perspective close-up, and perspective close-up cut section views, respectively, of a removable panel clip installed in the fiber optic housing of FIG. **26** to enable the fiber optic housing to support fiber optic panels and fiber optic modules interchangeably;

FIG. **28**A is a perspective view of the fiber optic housing in FIG. **27**A with the removable panel clips in FIGS. **27**A-**27**C installed to support fiber optic panels;

FIG. **28**B is a perspective view of the fiber optic housing in FIG. **27**A with the removable panel clips in FIGS. **27**A-**27**C installed and supporting fiber optic panels in the fiber optic housing;

FIG. **29** is a perspective view of an alternative exemplary removable panel clip installed in an alternative fiber optic housing to enable the fiber optic housing to interchangeably support fiber optic panels and fiber optic modules;

FIG. **30**A-**30**D are bottom, side, front, and back views, respectively, of the removable panel clip in FIG. **29**;

FIGS. **31**A-**1** and **31**A-**2** are top perspective views of front stacker assembly components that are configured to be assembled together to form an alternative assembled front stacker assembly that can be installed in a stackable shelf to support fiber optic equipment;

FIGS. **31**B-**1** and **31**B-**2** are bottom perspective views of front stacker assembly components in FIGS. **31**A-**1** and **31**A-**2**, respectively, that are configured to be assembled together to form an alternative assembled front stacker assembly that can be installed in a stackable shelf to support fiber optic equipment;

FIGS. **31**C-**1** and **31**C-**2** are first side views of front stacker assembly components in FIGS. **31**A-**1** and **31**A-**2**, respectively, that are configured to be assembled together to form an alternative assembled front stacker assembly that can be installed in a stackable shelf to support fiber optic equipment;

FIGS. **31**D-**1** and **31**D-**2** are second side views of front stacker assembly components in FIGS. **31**A-**1** and **31**A-**2**, respectively, that are configured to be assembled together to form an alternative assembled front stacker assembly that can be installed in a stackable shelf to support fiber optic equipment;

FIGS. **31**E-**1** and **31**E-**2** are bottom views of front stacker assembly components in FIGS. **31**A-**1** and **31**A-**2**, respectively, that are configured to be assembled together to form an alternative assembled front stacker assembly that can be installed in a stackable shelf to support fiber optic equipment;

FIGS. **31**F-**1** and **31**F-**2** are top views of front stacker assembly components in FIGS. **31**A-**1** and **31**A-**2**, respectively, that are configured to be assembled together to form an alternative assembled front stacker assembly that can be installed in a stackable shelf to support fiber optic equipment;

FIGS. **32**A-**1** and **32**A-**2** are top perspective views of rear stacker assembly components that are configured to be assembled together to form an alternative assembled rear stacker assembly that can be installed in a stackable shelf to support fiber optic equipment;

FIGS. **32**B-**1** and **32**B-**2** are first side views of rear stacker assembly components in FIGS. **32**A-**1** and **32**A-**2**, respectively, that are configured to be assembled together to form an alternative assembled rear stacker assembly that can be installed in a stackable shelf to support fiber optic equipment;

FIGS. **32**C-**1** and **32**C-**2** are second side views of rear stacker assembly components in FIGS. **32**A-**1** and **32**A-**2**, respectively, that are configured to be assembled together to form an alternative assembled rear stacker assembly that can be installed in a stackable shelf to support fiber optic equipment;

FIGS. **32**D-**1** and **32**D-**2** are top views of rear stacker assembly components in FIGS. **32**A-**1** and **32**A-**2**, respectively, that are configured to be assembled together to form an alternative assembled rear stacker assembly that can be installed in a stackable shelf to support fiber optic equipment;

FIGS. **32**E-**1** and **32**E-**2** are third side views of rear stacker assembly components in FIGS. **32**A-**1** and **32**A-**2**, respectively, that are configured to be assembled together to form an alternative assembled rear stacker assembly that can be installed in a stackable shelf to support fiber optic equipment; and

FIGS. **32**F-**1** and **32**F-**2** are bottom views of rear stacker assembly components in FIGS. **32**A-**1** and **32**A-**2**, respectively, that are configured to be assembled together to form an alternative assembled rear stacker assembly that can be installed in a stackable shelf to support fiber optic equipment.

DETAILED DESCRIPTION OF THE EMBODIMENTS

Reference will now be made in detail to certain embodiments, examples of which are illustrated in the accompanying

drawings, in which some, but not all features are shown. Indeed, embodiments disclosed herein may be embodied in many different forms and should not be construed as limited to the embodiments set forth herein; rather, these embodiments are provided so that this disclosure will satisfy applicable legal requirements. Whenever possible, like reference numbers will be used to refer to like components or parts.

Embodiments disclosed in the detailed description include fiber optic housings configured to accommodate fiber optic modules and fiber optic panels, and related components and methods. Fiber optic cassettes may also be accommodated. Throughout this disclosure, the term "fiber optic module" is intended to refer to either a fiber optic module or fiber optic cassette including but not limited to a splicing cassette. In one embodiment, a fiber optic apparatus is provided. The fiber optic apparatus is comprised of a fiber optic housing. The fiber optic apparatus is also comprised of one or more removable panel clips disposed in the fiber optic housing. Each of the one or more removable panel clips includes at least one receptacle configured to receive an insert of a fiber optic panel to support the fiber optic panel in the fiber optic housing.

In another embodiment, a fiber optic housing comprising a stackable shelf, a panel clip, a front stacker assembly, and a rear stacker assembly is provided. The panel clip, the front stacker assembly, and the rear stacker assembly removably attach to the stackable shelf to allow the stackable shelf to accommodate one or both of a fiber optic module and a fiber optic panel interchangeably. The panel clip serves as an adapter piece, which allows an insert, such as a plunger for plunger-style panels, to be used where a track or rail system or method of retention is used. The front stacker assembly and the rear stacker assembly allow a rail system or track-type system fiber optic module to be used in a housing that accommodates fiber optic panels, including plunger-style fiber optic panels.

The designation "U" refers to a standard equipment shelf size of a fiber optic equipment rack or a cabinet. This may also be referred to as "RU." For example, an equipment rack may support 1 U-sized shelves, with "U" equal to a standard 1.75 inches in height and nineteen (19) inches in width. In certain applications, the width of "U" may be twenty-three (23) inches. Typically, the more rack space (the more "U's") a fiber optic housing takes up, the higher the fiber capacity in the fiber optic housing.

FIGS. **1**-**32**B illustrate respectively an exemplary stackable shelf configured with one or more removable stacker assemblies to support fiber optic equipment of varying heights. A stacker assembly is any component, member or assembly that is configurable to support fiber optic equipment at a different desired height or heights (e.g., U spaces) from a surface, including but not limited to a mounting surface provided for a fiber optic shelf. The stackable shelf may be movably mounted in a fiber optic housing. The stackable shelf contains features that allow fiber optic equipment to be stacked at different height spaces in the stackable shelf thereby increasing its rack unit height by using multiples of the same components. Depending on the nature of an installation, a stackable shelf configured for a 1 U fiber optic housing could also be converted for use in a higher U space fiber optic housing, such as 2 U, 3 U, or greater U size, and fractional U sizes (e.g., ⅓ U, ⅔ U, 1⅓ U, 2⅔ U, etc.) as examples, by stacking or removing these components in the factory or in the field at the installation site, as needed or desired. The stackable shelves disclosed herein are shown as being configured in 1 U, 2 U, and 3 U sizes, but note that any U sizes are possible greater than 3 U and fractional U sizes below and above 1 U, for example ⅓ U, ⅔ U, ¾ U, ⅔ U, 1⅓ U, 2⅔ U, 3½ U, etc. The stackable shelves and the heights at which they can support fiber optic equipment is not limited in this manner.

In this regard, FIGS. **1**A-**1**C are perspective, front, and side views, respectively, of an exemplary stackable shelf **10** configured to be movably inserted in a fiber optic housing. The stackable shelf **10** is configured with stacker assemblies **12** to support fiber optic equipment **14** in multiple U height spaces depending on how the stackable shelf **10** is configured. In this example, the fiber optic equipment **14** is comprised of fiber optic panels **16**(**1**)-**16**(**3**). Each fiber optic panel **16**(**1**)-**16**(**3**) is of 1 U height space. Fiber optic panel **16**(**1**) is disposed in a first 1 U height space. Fiber optic panel **16**(**2**) is stacked on top of the fiber optic panel **16**(**1**) and is disposed in a second 1 U height space. Fiber optic panel **16**(**3**) is stacked on top of the fiber optic panel **16**(**2**) and is disposed in a third 1 U space.

The designation (**1**) for a particular component or part referenced in this application is to signify that such component is located adjacent in the first or bottom U space of the stackable shelf **10** in this example. The designation (**2**) for a particular component or part referenced in this application is to signify that such component is located adjacent in the second U space of the stackable shelf **10** in this example, stacked above components disposed in the first U space of the stackable shelf **10** in this example. The designation (**3**) for a particular component or part referenced in this application is to signify that such component is located adjacent in the third U space of the stackable shelf **10** in this example, stacked above components disposed in the second U space of the stackable shelf **10** in this example.

In this embodiment as illustrated in FIGS. **1**A-**1**C, to support the fiber optic panels **16**(**1**)-**16**(**3**) in the stackable shelf in a 3 U configuration, front stacker assemblies **18**(**1**)-**18**(**3**) are stacked on top of each other about a mounting surface **20** to support the three (3) fiber optic panels **16**(**1**)-**16**(**3**) to a 3 U height space. In this embodiment, three (3) front stacker assemblies **18**(**1**) are provided in the mounting surface **20** to support two (2) fiber optic panels **16**(**1**). Two (2) front stacker assemblies **18**(**1**) are integrated into the stacker assemblies **12** that are integrated on a left end **19** and a right end **21** of the mounting surface **20**, and which may or may not be configured to be removable from the mounting surface **20**. The stacker assembly **18**(**1**) disposed in the center section of the mounting surface **20** is removably attached to the mounting surface between the left end **19** and the right end **21**. In this manner, two (2) fiber optic panels **16**(**1**) can be supported by the stackable shelf **10** in a 1 U height space, as illustrated in FIGS. **1**A-**1**C, since two (2) stacker assemblies **18**(**1**) are provided to support one (1) fiber optic panel **16**(**1**) therebetween as will be described in more detail below. As will also be described in more detail below, the stackable shelf **10** can also be configured to support fiber optic modules (and/or fiber optic cassettes) in multiple U height spaces, including to height spaces less than 3 U and to height spaces greater than 3 U.

Before discussing the components that allow the stackable shelf **10** in FIGS. **1**A-**1**C to be configured to support the fiber optic equipment **14** in multiple U spaces with regard to FIGS. **2**A-**28**B, some other components that can be supported by the stackable shelf **10** and illustrated in FIGS. **1**A-**1**C are introduced. For example, as will be described below and illustrated in FIGS. **14**-**15**B, removable front fiber routing guides **22**(**1**)-**22**(**3**) can be attached to the front stacker assemblies **18**(**1**)-**18**(**3**) to route optical fibers connected to the fiber optic equipment **14** in a front **24** of the mounting surface **20** supported by the stackable shelf **10**. As another example, removable and rotatable fiber routing guides **26** can be attached to the mounting surface **20** to route optical fibers connected to

the fiber optic equipment **14** in a rear **28** of the fiber optic panels **16**(**1**). More information regarding the rotatable fiber routing guides **26** is described in related U.S. Provisional Patent Application Ser. No. 61/329,898.

As another example that will be described in more detail below and illustrated in FIGS. **11**A-**13**, fiber body holders **30**(**1**)-**30**(**2**) can also be provided in the stackable shelf **10**. The fiber body holders **30**(**1**)-**30**(**2**) are configured to support fiber bodies **32**, which may be fan-out bodies or furcation bodies, as illustrated in FIGS. **2**A, **2**B, and **10**A, in optical fibers connected to the rear **28** of the fiber optic equipment **14**. A first fiber body holder **30**(**1**) is attached to the mounting surface **20** to support the fiber bodies **32**. If desired or needed, a second fiber body holder **30**(**2**) is stacked on top of the first body holder **30**(**1**) to provide for the ability to support additional fiber bodies **32**.

FIGS. **2**A-**2**C are perspective, top, and front views, respectively, of the stackable shelf **10** in FIGS. **1**A-**1**C after the stackable shelf **10** has been configured to support fiber optic panels **16**(**1**) in a 1 U height space. The stackable shelf **10** illustrated in FIGS. **2**A-**2**D can then be left as only support fiber optic panels **16**(**1**) in a 1 U height space, or additional front stacker assemblies **18** (e.g., removable front stacker assemblies **18**(**2**), **18**(**3**)) can be stacked on top of the front stacker assemblies **18**(**1**) to allow additional fiber optic panels **16** (e.g., fiber optic panels **16**(**2**), **16**(**3**)) to be supported by the stackable shelf **10** in additional U height spaces about the fiber optic panels **16**(**1**).

FIGS. **2**A-**2**D also illustrate how the fiber optic panels **16**(**1**) are supported by the front stacker assemblies **18**(**1**). As illustrated therein, first surfaces **40**(**1**) of the removable panel clips **38**(**1**) are attached to the front stacker assemblies **18**(**1**). As illustrated in FIG. **2**B, the removable panel clips **38**(**1**) also include second surfaces **42**(**1**) with receivers **44**(**1**) disposed therein that are configured to receive an insert **46**(**1**) disposed in a front plate **48**(**1**) of the fiber optic panels **16**(**1**) to attach and retain the fiber optic panels **16**(**1**) to the removable panel clip **38**(**1**). Thus, the fiber optic panels **16**(**1**) are secured to the stackable shelf **10** by attaching to the removable panel clips **38**(**1**), which are in turn attached to the front stacker assemblies **18**(**1**), which are in turn attached to the mounting surface **20**. In this embodiment of the fiber optic panels **16**(**1**), the insert **46**(**1**) is comprised of a plunger for retention of the fiber optic panel **16**(**1**) to the removable panel clips **38**(**1**). However, other types of inserts **46**(**1**) could be employed.

FIG. **2**D is a perspective view of the stackable shelf **10** with optical fibers **47** routed through fiber routing guides **26** terminated to the rear **28** of fiber optic adapters **49**(**1**) disposed in the fiber optic panels **16**(**1**). The optical fibers **47** extend from the fiber bodies **32** that are installed and supported in the fiber body holder **30**(**1**), as also illustrated in FIG. **2**D. The fiber bodies **32** are connected to fiber optic cables **51** that contain the optical fibers **47**.

FIG. **3**A is a perspective view of the stackable shelf **10** in FIGS. **2**A-**2**D, but configured with alternative elongated fiber routing guides **34**(**1**) that include elongated sections **36**(**1**) to extend the fiber routing guides **34**(**1**) farther away from the mounting surface **20**. FIG. **3**B illustrates an alternative rotatable routing guide **50** that may be attached to a mounting surface **20'** of an alternative stackable shelf **10'** to route optical fibers connected to a rear **28'** of a fiber optic panel **16**(**1**)'.

FIG. **4** is a perspective view of the stackable shelf **10** in FIGS. **1**A-**2**D without any fiber optic equipment installed therein. FIG. **4** is provided as a starting point to describe how stacker assemblies and related components are added and stacked on the mounting surface **20** of the stackable shelf **10** to configure the stackable shelf **10** to support fiber optic equipment of varying U height spaces. As illustrated in FIG. **4**, stacker assemblies **12** are integrated into the mounting surface **20**. The stacker assemblies **12** are configured to support either the fiber optic panels **16**(**1**) or fiber optic modules in this embodiment. To support fiber optic panels **16**(**1**), a receiver **52**(**1**) is disposed in a side **54**(**1**) of the front stacker assembly **18**(**1**) portion of the stacker assembly **12** to receive the removable panel clips **38**(**1**) illustrated in FIGS. **2**A-**2**D. More detail and information regarding the removable panel clips **38**(**1**) being attached to the front stacker assembly **18**(**1**) is described below and illustrated in FIGS. **9**A-**10**E. If a fiber optic module(s) is desired to be supported, the removable panel clips **38**(**1**) are not employed. Instead, the fiber optic module(s) includes a rail guide that is configured to receive a rail **56**(**1**) disposed in a rear stacker assembly **58**(**1**) provided as a portion of the stacker assembly **12**. More information regarding installing a fiber optic module receiving the rail **56**(**1**) disposed in the rear stacker assembly **58**(**1**) to support the fiber optic module in the stackable shelf **10** is illustrated in more detail below in FIGS. **6**-**7**B, **9**-**11** and **13**A-**13**F.

With continuing reference to FIG. **4**, to support attaching a front stacker assembly **18**(**1**) between the front stacker assemblies **18**(**1**) disposed on the ends **19**, **21** of the mounting surface **20** to support the fiber optic panels **16**(**1**) in FIGS. **1**A-**2**D, the receivers **59** are disposed in the mounting surface **20**. As illustrated in FIG. **5**A and described in more detail in FIGS. **5**A-**5**B and **12**A-**12**F, the bottom of the front stacker assemblies **18**(**1**) include a latch **62**(**1**) that is configured to be received and secured in the receiver **59** to attach additional front stacker assemblies **18**(**1**) in the mounting surface **20** to support the fiber optic panels **16**(**1**). An additional front stacker assembly **18**(**1**) attached to the mounting surface **20** is illustrated in FIG. **5**B.

Similarly, to support attaching an additional removable rear stacker assembly **58**(**1**) between the non-removable rear stacker assemblies **58**(**1**) disposed on the ends **19**, **21** of the mounting surface **20** to support fiber optic modules, receivers **64**(**1**) are disposed in the mounting surface **20**. As illustrated in FIG. **5**C and described in more detail in FIGS. **13**A-**13**F, the bottom of the rear stacker assembly **58**(**1**) include latches **66**(**1**) that are configured to be received and secured in receivers **63** to attach an additional rear stacker assembly **58**(**1**) in the mounting surface **20** to support fiber optic modules. An additional receiver **67** is disposed in the mounting surface **20** to receive an additional latch **70**(**1**) disposed in the bottom of the rear stacker assembly **58**(**1**). An additional rear stacker assembly **58**(**1**) attached to the mounting surface **20** is illustrated in FIG. **5**D. Also, receivers **72** in the form of openings are disposed in the mounting surface **20** to receive the removable fiber routing guides **26** illustrated in FIGS. **1**A-**2**D.

With reference to FIGS. **4**, **5**B, and **5**D, to support allowing stacking additional front stacker assemblies **18** on top of the front stacker assemblies **18**(**1**) to support additional fiber optic panels **16** at U height spaces above the U height space of the stacker assemblies **12** (e.g., fiber optic panels **16**(**2**) and **16**(**3**) in FIGS. **1**A-**1**C), receivers **60**(**1**) are also disposed in the top of the front stacker assemblies **18**(**1**). As illustrated in FIG. **5**A, the latch **62** disposed in the bottom of the front stacker assembly **18**(**1**) is configured to be received and secured in the receivers **60**(**1**) to support stacking additional front stacker assemblies **18** on top of the front stacker assembly **18**(**1**).

Similarly, to support stacking additional rear stacker assemblies **58** on top of the rear stacker assemblies **58**(**1**) to support additional fiber optic modules at U height spaces above the U height space of the stacker assemblies **12**, receivers **64**(**1**) are disposed in the top of the rear stacker assemblies

58(1). In this embodiment, the receivers 64(1) are of the same design as the receivers 60(1). As illustrated in FIG. 5C, the bottom of the rear stacker assemblies 58 include the latches 66(1) that are configured to be received and secured in the receivers 64(1) to support stacking additional rear stacker assemblies 58 on top of the rear stacker assembly 58(1). An additional receiver 68(1) is also disposed in the rear stacker assemblies 58(1) configured to receive an additional latch 70, as illustrated in FIG. 5C, disposed in the bottom of the rear stacker assemblies 58 stacked on top of the rear stacker assembly 58(1). In this embodiment, the additional receiver 70(1) is of a different design from the receivers 60(1), 64(1).

FIGS. 6A and 6B are perspective and side views, respectively, of the stackable shelf 10 in FIGS. 1A-2D including front stacker assemblies 18(1) and rear stacker assemblies 58(1) installed in the stackable shelf 10. The stackable shelf 10 is supporting both a fiber optic panel 16(1) and a fiber optic module 74(1) illustrated in FIGS. 6C and 6D in the same height space. FIG. 7 is a perspective view of the stackable shelf 10 in FIGS. 1A-2D including front stacker assemblies 18(1) and rear stacker assemblies 58(1) installed in the stackable shelf 10 supporting two (2) fiber optic modules 74(1), 74(2) in the same height space.

As illustrated in the front perspective and top views of the fiber optic module 74 in FIGS. 6C and 6D, respectively, the fiber optic module 74 includes a housing 76 that includes a first end 78 and a second end 80. Rails guides 82A, 82B are disposed in the housing 76 on the first end 78 and the second end 80 of the housing 76, respectively. Thus, when a rear portion 85 of the fiber optic module 74 is inserted between rear stacker assemblies 58(1) from the front 24 of the mounting surface 20, the rail guides 82A, 82B of the fiber optic module 74 are aligned with the rails 56(1) in the rear stacker assemblies 58(1). As illustrated in FIGS. 6A, 6D, and 7, the rail guides 82A, 82B receive the rails 56(1). The fiber optic module 74 can be slid back from the front 24 of the mounting surface 20 to a rear 84 of the mounting surface 20, as illustrated in FIG. 6A, until a front side 86 of the fiber optic module 74 is located adjacent to the front stacker assembly 18(1) on the ends 19, 21 of the mounting surface 20.

As illustrated in FIG. 6D, the fiber optic module 74 can be locked into place in the rails 56(1) by protrusions 88A, 88B provided in a latching system 90A, 90B disposed in the rail guides 82A, 82B, respectively. As illustrated in FIG. 6D, the protrusions 88A, 88B are each configured to be secured into notches 92A, 92B disposed in the rails 56(1) to lock the fiber optic module 74 about the rear stacker assemblies 58(1). When it is desired to release the fiber optic module 74 from the rear stacker assemblies 58(1), latches 94A, 94B can be pushed inward toward the fiber optic module 74 to release the protrusions 88A, 88B from the notches 92A, 92B, respectively, to allow the rail guides 82A, 82B of the fiber optic module 74 to be moved about the rails 56(1) of the rear stacker assemblies 58(1).

As previously discussed, providing the front stacker assemblies 18 and rear stacker assemblies 58 allows the stackable shelf 10 to be configured in a stacked arrangement to support fiber optic equipment at multiple height spaces as needed or desired. One example of this arrangement is illustrated in FIGS. 8A-8C. FIGS. 8A-8C are perspective, front, and rear views, respectively, of the stackable shelf 10 in FIGS. 1A-2D including additional front removable stacker assemblies 18(2) stacked on top of the front stacker assemblies 18(1) to support additional fiber optic panels 16(2) stacked over fiber optic panels 16(1) in a 2 U height space. FIG. 9 is a perspective view of the stackable shelf 10 in FIGS. 1A-2D including additional front removable stacker assemblies 18(2) stacked on top of the front stacker assemblies 18(1) to support an additional fiber optic panel 16(2) stacked over the fiber optic panel 16(1) and an additional fiber optic module 74(2) stacked over the fiber optic module 74(1) in a 2 U height space. FIG. 10 is a perspective view of the stackable shelf 10 in FIGS. 1A-2D including additional rear removable stacker assemblies 58(2) stacked on top of the rear stacker assemblies 58(1) to support additional fiber optic modules 74(2) stacked over the fiber optic modules 74(1) in a 2 U height space. Thus, in these configurations, the stackable shelf 10 is configured for providing fiber optic equipment in a 2 U height space for a 2 U fiber optic housing.

In FIGS. 8A-8C and 9, the removable panels clips 38(1), 38(2) previously described are employed to secure the fiber optic panels 16(1), 16(2) to the front stacker assemblies 18(1), 18(2), respectively. More information regarding stacking of front stacker assemblies 18 on top of other front stacker assemblies 18 to support additional fiber optic equipment at additional height spaces in the stackable shelf 10, such as front stacker assemblies 18(2) stacked on top of the front stacker assemblies 18(1) in FIGS. 8A-8C, is described below and illustrated in FIGS. 12A-12F.

FIG. 11 is a perspective view of the stackable shelf 10 in FIGS. 1A-2D including additional rear removable stacker assemblies 58(2) stacked on top of the rear stacker assemblies 58(1), and rear removable stacker assemblies 58(3) stacked on top of the rear stacker assemblies 58(2) to support additional fiber optic modules 74(3), 74(2) stacked over the fiber optic modules 74(1) in a 3 U height space. Thus, in this configuration, the stackable shelf 10 is configured for providing fiber optic equipment in 3 U height space for a 3 U fiber optic housing.

FIGS. 12A-12F are a perspective exploded, assembled perspective, front, side, top, and bottom views, respectively, of the front stacker assembly 18. The front stacker assembly 18 illustrated in FIGS. 12A-12F is shown as a removable stacker assembly 18 that can be attached and removed to the mounting surface 20 and/or on top of other front stacker assemblies 18. However, the design features in the front stacker assembly 18 illustrated in FIGS. 12A-12F could also be employed in a front stacker assembly 18 that is not removable and disposed permanently on the mounting surface 20 of the stackable shelf 10, as illustrated in FIG. 4.

As illustrated FIGS. 12A-12F, the front stacker assembly 18 includes a support member 100. The support member 100 is comprised of a support body 102. The receiver 60 previously described with regard to FIGS. 4, 5B, and 5D is disposed in the support body 102. A first receiver 104A comprised of an opening in this embodiment is disposed in a first side 106 of the support body 102 and is configured to support fiber optic equipment in the stackable shelf 10. A second receiver 104B (FIG. 12D) comprised of a second opening in this embodiment is disposed in a second side 108 of the support body 102, and is also configured to support fiber optic equipment in the stackable shelf 10. For example, as previously discussed and discussed in more detail below with regard to FIGS. 15A-16E, the removable panel clips 38 can be attached to the first and second receivers 104A, 104B in the support body 102 so that fiber optic panels 16 can be secured to the removable panel clips 38. In turn, the fiber optic panels 16 attached to the removable panel clips 38 are then secured to the support body 102 of the front stacker assembly 18.

With continuing reference to FIGS. 12A-12F, a fiber routing guide receiver 110 is also disposed in the support body 102. The fiber routing guide receiver 110 is comprised of a platform 112 raised from the surface of the support body 102 by two (2) support members 114A, 114B. The fiber routing

guide receiver **110**, and more particularly, the platform **112**, is configured to receive the front fiber routing guide **22**, as described in more detail below and illustrated in FIGS. **13**-**14**B.

With continuing reference to FIGS. **12**A-**12**F, the receiver **60** previously discussed is disposed in a top side **116** of the support body **102**. The receiver **60** contains a keyed portion **117**. The receiver **60** is configured to receive the latch **62**, previously described and illustrated in FIG. **5**A, and illustrated in FIGS. **12**C-**12**F. The latch **62** in this embodiment is disposed in an attachment body **118** of an attachment member **120** configured to receive the support body **102** as illustrated in FIG. **12**A, and as assembled in FIG. **12**B. To secure the latch **62** to the receiver **60**, a locking feature **113** as illustrated in FIGS. **12**C and **12**E, is first inserted into the receiver **60** and slid underneath the receiver **60**. As a result, the latch **62** is inserted into the receiver **60** and slid about the receiver **60** into the keyed portion **117** to be secured to the support body **102**. In this scenario, the latch **62** can be disposed in the receiver **60** in the top side **116** of the support body **102** of the front stacker assembly **18** to allow one front stacker assembly **18** to be stacked on top of another front stacker assembly **18** to allow the stackable shelf **10** to be configured to support fiber optic equipment at additional height spaces above a 1-U height space, as desired or needed. This configuration also allows the front stacker assembly **18** to be secured to the mounting surface **20**, as previously discussed with regard to FIG. **5**A, wherein the latch **62** is disposed in the receiver **59** in the mounting surface **20** to support fiber optic equipment in the first 1-U height space from the mounting surface **20**.

With reference to FIGS. **12**A and **12**B, the attachment body **118** is provided as a separate component configured to be secured to the support body **102**. In this regard, latches **122**A, **122**B are disposed in the attachment body **118**, as illustrated in FIG. **12**A. The latches **122**A, **122**B contain extension members **124**A, **124**B that are configured to be bent inward as the support body **102** is disposed over top the attachment body **118**. The energy stored in the extension members **124**A, **124**B will eventually cause the extension members **124**A, **124**B to extend outward into openings **126**A, **126**B to secure the support body **102** to the attachment body **118**, as illustrated in FIG. **12**B.

FIG. **13** is a perspective view of the exemplary front fiber routing guide **22** in FIGS. **1**A-**2**D positioned to be secured to the front stacker assembly **18** in FIGS. **12**A-**12**F installed in the stackable shelf **10** of FIG. **4**. More particularly, the front fiber routing guide **22** is configured to be secured to the fiber routing guide receiver **110** comprised of the platform **112** raised from the surface of the support body **102** by the support members **114**A, **114**B, as illustrated in FIGS. **12**A-**12**F and described above. Although not illustrated in FIG. **13**, the fiber routing guide receiver **110** is also configured to receive and secure the elongated fiber routing guides **34** illustrated in FIGS. **3**A and **3**B.

FIGS. **14**A and **14**B are side and rear views, respectively, of the front fiber routing guide **22** that is configured to be attached to the front stacker assembly **18** illustrated in FIG. **13**. As illustrated in FIG. **14**A, the front fiber routing guide **22** is comprised of a routing guide body **130**. Two (2) extension members **132**, **134** extend from the routing guide body **130** such that a retention area **136** is created therebetween for optical fibers to be retained. The extension member **132** contains an end extension **138** and the extension member **134** contains a retainer **140**, respectively, to retain optical fibers in the retention area **136**. The end extension **138** and the retainer **140**, for example a flap, are not closed so that optical fibers can be disposed therebetween into the retention area **136**. An additional extension member **142** is also provided to allow the stackable shelf **10** to be pulled out with an additional area **144** to provide for finger access.

To attach the front fiber routing guide **22** to the platform **112** on the front stacker assembly **18** as illustrated in FIG. **13**, a receiver **146** is disposed in a rear side **148** of the front fiber routing guide **22**, as illustrated in FIG. **14**B. The receiver **146** is comprised of a hood **150** that is configured to be slipped over a top portion of the platform **112** of the fiber routing guide receiver **110**. The front fiber routing guide **22** can be removed from the front stacker assembly **18** by pulling up on the front fiber routing guide **22** such that the hood **150** is lifted off of the platform **112** of the fiber routing guide receiver **110** to clear the front fiber routing guide **22** from the front stacker assembly **18**.

As previously discussed with regard to FIG. **3**A, the front stacker assembly **18** is also configured to support the removable panel clip **38** to allow fiber optic panels **16** to be secured to the front stacker assembly **18** and thus supported by the stackable shelf **10**. The removable panel clip **38** allows fiber optic panels **16** and fiber optic modules **74** to be supported interchangeably in the stacked shelf **10** in this embodiment. In this regard, FIGS. **15**A and **15**B are perspective and side views, respectively, of the front stacker assembly **18** in FIGS. **12**A-**12**F with the removable panel clip **38** secured thereto to support securing fiber optic panels **16** to the stackable shelf **10** in FIG. **4**.

As illustrated in FIGS. **15**A-**16**E, the removable panel clip **38** includes a flange **152**. The flange **152** is configured to be inserted into the receiver **104**A or **104**B of the front stacker assembly **18** (FIGS. **12**A and **12**D) to attach the removable panel clip **38** to the front stacker assembly **18**. The flange **152** in this embodiment is arcuate-shaped, but other shapes can be provided, including but not limited to semi-circular and circular. The flange **152** is disposed in the first surface **40** of the removable panel clip **38** (see also FIGS. **2**A-**2**C). The receiver **44** disposed in the second surface **42** to the first surface **40** of the removable panel clip **38** is configured to receive the insert **46** of a fiber optic panel **16**, as illustrated in FIGS. **2**A-**2**C. The first surface **40** is orthogonal to the second surface **42** in this embodiment. The flange **152** is configured to be inserted in a first area **158** of the receiver **104**A or **104**B and slid into a second area **160** of the receiver **104**A or **104**B, as illustrated in FIG. **12**D, to attach the removable panel clip **38** to the front stacker assembly **18**. A standoff or extender **162** (FIG. **16**A) is disposed between the flange **152** and the first surface **40** to extend the flange **152** a distance away from the first surface **40** so the flange **152** can be inserted into the receiver **104**A or **104**B in the front stacker assembly **18**. The flange **152** can then be slid behind the second area **160** of the receiver **104**A or **104**B, which has an opening size less than the size of the flange **152**.

The flange **152** cannot be removed from the receiver **104**A or **104**B unless and until the flange **152** is slid back to the first area **158** of the receiver **104**A or **104**B, which has an opening size that will allow the flange **152** to be removed from the receiver **104**A or **104**B. A protrusion **164** is also disposed in the first surface **40** of the removable panel clip **38** to be disposed into the second area **160** of the receiver **104**A or **104**B to further secure the removable panel clip to the removable stacker assembly **18**.

FIGS. **17**A-**17**F are exploded perspective, assembled perspective, top, side, front, and bottom views, respectively, of the rear stacker assembly **58**. The rear stacker assembly **58** illustrated in FIGS. **17**A-**17**F is shown as a removable rear stacker assembly **58** that can be attached to and removed from the mounting surface **20** and/or on top of other rear stacker

assemblies **58**. However, the design features in the rear stacker assembly **58** illustrated in FIGS. **17**A-**17**F could also be employed in a rear stacker assembly **58** that is not removable and disposed permanently on the mounting surface **20** of the stackable shelf **10**, as illustrated in FIG. **4**.

As illustrated FIGS. **17**A-**17**F, the rear stacker assembly **58** includes a support member **170**. The support member **170** is comprised of a support body **172**. The receivers **64**, **67** in the form of openings in this embodiment and previously described with regard to FIGS. **5**A-**5**D are disposed in the support body **172**. The receivers **64**, **67** are disposed in a top side **174** of the support body **172**. As illustrated in FIGS. **17**A-**17**C, the receivers **64** contain keyed portions **176**. The receivers **64**, **67** are configured to receive the latches **66**, **70**, respectively, previously described and illustrated in FIGS. **5**A-**5**D, and illustrated in FIGS. **17**A and **17**D-**17**E. The latches **66**, **70** in this embodiment are disposed in an attachment body **178** of an attachment member **180** configured to receive the support body **172** as illustrated in FIG. **17**A, and as assembled in FIG. **17**B. The latches **66** are inserted into the receivers **64** and slid about the receivers **64** into the keyed portions **176** to be secured to the support body **172**. In this scenario, the latches **66** can be disposed in the receivers **64** in the top side **174** of the support body **172** to allow one rear stacker assembly **58** to be stacked on top of another rear stacker assembly **58** to allow the stackable shelf **10** to be configured to support fiber optic equipment at additional height spaces about a 1-U height space, as desired or needed. This configuration also allows the rear stacker assembly **58** to be secured to the mounting surface **20**, as previously discussed with regard to FIG. **5**C, wherein the latches **66** are disposed in the receivers **63** in the mounting surface **20** to support fiber optic equipment in the first 1-U height space from the mounting surface **20**.

With reference to FIGS. **17**A and **17**B, the attachment body **178** is provided as a separate component configured to be secured to the support body **172**. In this regard, latches **182**A-**182**D are disposed in the attachment body **178**, as illustrated in FIG. **17**A. The latches **182**A-**182**D contain protrusion members **184**A-**184**D that are configured to be bent inward as the support body **172** is disposed over top the attachment body **178**. The protrusion members **184**A-**184**D are resilient such that they provide biasing, thus eventually causing the extension members **184**A-**184**D to extend outward into openings **186**A-**186**D to secure the support body **172** to the attachment body **178**, as illustrated in FIG. **17**B.

As previously discussed with regard to FIGS. **6**A-**6**D, and as illustrated in FIGS. **12**A-**12**F, rails **56** disposed on each side **188**A, **188**B in the rear stacker assembly **58** are configured to receive the rail guides **82**A, **82**B disposed in the housing **76** the fiber optic module **74** to support the fiber optic module **74** between two (2) adjacent rear stacker assemblies **58**. In this embodiment of the rear stacker assembly **58**, the rails **56** are comprised of two sub-rails **56**A, **56**B, whose combined width is configured to be received inside the rail guides **82**A, **82**B of the fiber optic module **74**. A solid rail could alternatively be employed as the rail **56**. Employing the sub-rails **56**A, **56**B reduces material and weight of the rear stacker assemblies **58**.

FIGS. **18**A-**18**D are perspective, front, top, and side views, respectively, of the fiber body holder **30** disposed in the stackable shelf **10** in FIG. **1**A-**2**D. As previously discussed and illustrated in FIG. **2**D, the fiber body holder **30** is configured to hold and support the fiber furcation bodies **32** disposed in the stackable shelf **10**. The fiber body holder **30** contains a plurality of channels **190** disposed between extension members **191**. Each of the plurality of channels **190** is configured to support a fiber body holder **30** disposed therein. End sections **192**A, **192**B provide for the ability of a technician to grip the fiber body holder **30** and to squeeze a latch **194** so that protrusion members **196**A, **196**B can be inserted into receivers **198** (FIG. **19**A) disposed in the mounting surface **20** to secure the fiber body holder **30** to the mounting surface **20**. This is illustrated in the perspective bottom view of the mounting surface **20** in FIG. **19**A and the side view of the mounting surface **20** in FIG. **19**C to secure the fiber body holder **30** to the mounting surface **20**. If additional capacity is needed or desired to support additional fiber bodies **32**, an additional fiber body holder **30**(**2**) can be provided and stacked on top of the fiber body holder **30**(**1**) secured to the mounting surface **20** of the stackable shelf **10**, as illustrated in FIG. **20**.

Once the stackable shelf **10** is configured with the desired fiber optic equipment, the stackable shelf **10** is configured to be inserted into a fiber optic housing. The fiber optic housing containing the stackable shelf **10** can then be mounted in an equipment rack. In this regard, FIG. **21** is a top close-up view of the right side of the stackable shelf **10** illustrating an exemplary rail system **200** configured to allow the stackable shelf **10** to be moveable about and secured within a 1-U fiber optic housing **202**, as illustrated in FIGS. **22**-**24**. A rail system like that of the exemplary rail system **200** is also disclosed in U.S. patent application Ser. No. 12/576,806 entitled "Fiber Optic Equipment Guides and Rails Configured With Stopping Position(s), and Related Equipment and Methods," the disclosure of which is relied upon and incorporated herein by reference in its entirety.

FIG. **22** is a side view of the right side, transparent view of the stackable shelf **10** of FIGS. **1**A-**2**D installed inside the fiber optic housing **202**. FIG. **23** is a perspective view of the fiber optic housing **202** that includes the stackable shelf **10** in FIG. **22** with mounting brackets **228**A, **228**B installed in a rear position of the fiber optic housing **202** wherein the front fiber routing guides **22**(**1**) do not extend beyond a front **206** of the fiber optic housing **202**. FIG. **24** is a perspective view of the fiber optic housing **202** that includes the stackable shelf **10** in FIG. **22** with mounting brackets **204**A, **204**B installed in a front position on the fiber optic housing **202**, wherein the front fiber routing guides **22**(**1**) extend beyond the front **206** of the fiber optic housing **202**.

As illustrated in FIG. **21**, the rail system **200** contains two leaf springs **208**A, **208**B. The leaf springs **208**A, **208**B contain protrusions **210**A, **210**B that are configured to engage with stops **212**A, **212**B inside sides **214**A, **214**B of the fiber optic housing **202**, as illustrated in FIGS. **21** and **22**. The stops **212**A, **212**B prevent the stackable shelf **10** from being removed from the fiber optic housing **202** unless enough force is applied to the stackable shelf **10** to bend the leaf springs **208**A, **208**B to allow the protrusions **210**A, **210**B to clear the stops **212**A, **212**B. As illustrated in FIG. **22**, a detent **216** disposed in the rail system **200** of the stackable shelf **10** is configured to receive protrusions **218**A-**218**C. The protrusions **218**A-**218**C provide stopping positions for the stackable shelf **10** to be moved in and out of the fiber optic housing **202** for access and storage without having to fully remove the stackable shelf **10** from the fiber optic housing **202**.

As illustrated in FIGS. **22** and **23**, the fiber optic housing **202** may be configured with a door **220** that can be closed to secure the stackable shelf **10** inside the fiber optic housing **202**. Release latches **222**A, **222**B are provided in the door **220** to allow the door **220** to be opened when the release latches **222**A, **222**B are engaged downward to release locks **224**A, **224**B from openings **226**A, **226**B. Mounting brackets **228**A, **228**B are installed on the sides **214**A, **214**B of the fiber optic housing **202**, respectively, to allow the fiber optic housing **202**

to be mounted in an equipment rack. The fiber optic housing **202** contains mounting receivers **230**A, **230**B that allow the mounting brackets **228**A, **228**B to be positioned behind the front **206** of the fiber optic housing **202**, as illustrated in FIG. **23**, or at the front **206** of the fiber optic housing **202**, as illustrated in FIG. **24**. Strain relief brackets **232**A, **2328** are provided to relieve strain from optic fibers routed to the fiber optic housing **202**.

FIG. **25** includes perspective views of exemplary components used to provide a stackable shelf **10** supporting fiber optic equipment in the fiber optic housing **202**. Previous elements already described are shown with common element numbers and are not re-described. The fiber optic housing **202** in this embodiment is comprised of a base **234**, a cover **236** attached to the base **234**, a rear section **238**, and the door **220**.

FIG. **26** is a perspective view of an alternative fiber optic housing **240** configured to support the fiber optic modules **74** and fiber optic panels **16** interchangeably by employing the removable panel clip **38**. However, the fiber optic housing **240** is configured to support fiber optic equipment in a vertical orientation as opposed to a horizontal orientation as provided in the fiber optic housing **202** in FIGS. **22**-**24**. FIG. **26** illustrates the fiber optic housing **240** supporting the fiber optic modules **74**. If it is desired to provide fiber optic panels **16** in the fiber optic housing **240**, the removable panel clips **38** can be installed in a base **242** and a top **244** of the fiber optic housing **240**, as illustrated in FIGS. **27**A-**27**C. FIGS. **27**A-**27**C are perspective, perspective close-up, and perspective close-up cut section views, respectively, of the removable panel clip **38** installed in the fiber optic housing **240** to enable the fiber optic housing **240** to support fiber optic panels **16** and fiber optic modules **74** interchangeably. The base **242** contains receivers **246** in the form of openings that contain the same form as the receivers **104**A, **104**B in the front stacker assembly **18** in FIGS. **12**A-**12**F to receive and secure the flange **152** of the removable panel clip **38**. The removable panel clip **38** is secured to the receiver **246** in the base **242** in the same manner as the removable panel clip **38** is secured to the receiver **104**A, **104**B of the front stacker assembly **18** as previously described and illustrated in FIGS. **15**A-**16**E, and thus is not be re-described herein.

FIG. **28**A is a perspective view of the fiber optic housing in FIG. **27**A with the removable panel clips **38** installed in the base **242** and the top **244** to be able support fiber optic panels **16**. FIG. **28**B is a perspective view of the fiber optic housing **240** in FIG. **27**A with the removable panel clips **30** installed and the inserts **46** of the fiber optic panels **16** inserted into the receivers **44** of the removable panel clips **38** to support the fiber optic panels **16** in the fiber optic housing **240**.

FIG. **29** is a perspective view of another alternative exemplary removable panel clip **250** installed in another alternative fiber optic housing **252** to enable the fiber optic housing **252** to interchangeably support fiber optic panels and fiber optic modules. FIGS. **30**A-**30**D illustrate bottom, side, front, and back side views, respectively, of the removable panel clip **250** in FIG. **29**. The removable panel clips **250** are configured to be attached to a rail system **254** disposed in the fiber optic housing **252** to attach the removable panel clips **250** to the fiber optic housing **252** to support fiber optic panels. The rail system **254** is configured to support fiber optic modules in the fiber optic housing **252** when the removable panel clip **250** is not attached to the rail system **254**. In this regard, the removable panel clips **250** each comprise an opening **256** configured to receive a rail **258** disposed in the fiber optic housing **252** to attach the removable panel clips **250** to the fiber optic housing **252**. Like the removable panel clip **38**, the removable panel clip **250** contains a receptacle **260** disposed therein that is configured to receive an insert from a fiber optic panel to secure the fiber optic panel to the removable panel clip **250** and thus the fiber optic housing **252**. Protrusions **263** are disposed in the removable panel clip **252**, as illustrated in FIG. **29**, that are configured to engage with receivers **262** to further secure the removable panel clips **250** to the fiber optic housing **252**. A support member **264** is disposed or provided as part of the removable panel clip **250** to provide structural support, as illustrated in FIGS. **30**A and **30**B.

FIGS. **31**A-**1** and **31**A-**2** are top perspective views of first and second front stacker assembly components **270**, **272**, respectively, that are configured to be assembled together to form an alternative assembled front stacker assembly that can be installed in a stackable shelf, including but not limited to the stackable shelf **10**, to support fiber optic equipment, including but not limited to fiber optic panels and fiber optic modules. In this regard, the first front stacker assembly component **270** is configured to fit and be secured to the second front stacker assembly component **272** to provide an assembled front stacker assembly. The second front stacker assembly component **272** contains protrusions **274** that are configured to fit inside and be secured to openings **276** in the first front stacker component **270**. The assembled front stacker assembly can be secured to a mounting surface of a stackable shelf and fiber optic equipment secured thereto to support fiber optic equipment on a mounting surface.

FIGS. **31**B-**1** and **31**B-**2** are bottom perspective views of the front stacker assembly components **270**, **272** in FIGS. **31**A-**1** and **31**A-**2**, respectively, that are configured to be assembled together to form an alternative assembled front stacker assembly that can be installed in a stackable shelf to support fiber optic equipment. FIGS. **31**C-**1** and **31**C-**2** are first side views of the front stacker assembly components **270**, **272** in FIGS. **31**A-**1** and **31**A-**2**, respectively, that are configured to be assembled together to form an alternative assembled front stacker assembly that can be installed in a stackable shelf to support fiber optic equipment. FIGS. **31**D-**1** and **31**D-**2** are second side views of the front stacker assembly components **270**, **272** in FIGS. **31**A-**1** and **31**A-**2**, respectively, that are configured to be assembled together to form an alternative assembled front stacker assembly that can be installed in a stackable shelf to support fiber optic equipment. FIGS. **31**E-**1** and **31**E-**2** are bottom views of the front stacker assembly components **270**, **272** in FIGS. **31**A-**1** and **31**A-**2**, respectively, that are configured to be assembled together to form an alternative assembled front stacker assembly that can be installed in a stackable shelf to support fiber optic equipment. FIGS. **31**F-**1** and **31**F-**2** are top views of the front stacker assembly components **270**, **272** in FIGS. **31**A-**1** and **31**A-**2**, respectively, that are configured to be assembled together to form an alternative assembled front stacker assembly that can be installed in a stackable shelf to support fiber optic equipment.

FIGS. **32**A-**1** and **32**A-**2** are top perspective views of first and second rear stacker assembly components **280**, **282**, respectively, that are configured to be assembled together to form an alternative assembled rear stacker assembly that can be installed in a stackable shelf, including but not limited to the stackable shelf **10**, to support fiber optic equipment, including but not limited to fiber optic panels, fiber optic modules, and fiber optic cassettes. In this regard, the first rear stacker assembly component **280** is configured to fit and be secured to the second rear stacker assembly component **282** to provide an assembled rear stacker assembly. The first rear stacker component **280** contains protrusions **284** that are configured to fit inside and be secured to openings **286** in the second rear stacker component **282**. The assembled rear

stacker assembly can be secured to a mounting surface of a stackable shelf and fiber optic equipment secured thereto to support fiber optic equipment on a mounting surface.

FIGS. **32**B-**1** and **32**B-**2** are first side views of the rear stacker assembly components **280**, **282** in FIGS. **32**A-**1** and **32**A-**2**, respectively, that are configured to be assembled together to form an alternative assembled rear stacker assembly that can be installed in a stackable shelf to support fiber optic equipment. FIGS. **32**C-**1** and **32**C-**2** are second side views of the rear stacker assembly components **280**, **282** in FIGS. **32**A-**1** and **32**A-**2**, respectively, that are configured to be assembled together to form an alternative assembled rear stacker assembly that can be installed in a stackable shelf to support fiber optic equipment. FIGS. **32**D-**1** and **32**D-**2** are top views of the stacker assembly components **280**, **282** in FIGS. **32**A-**1** and **32**A-**2**, respectively, that are configured to be assembled together to form an alternative assembled rear stacker assembly that can be installed in a stackable shelf to support fiber optic equipment. FIGS. **32**E-**1** and **32**E-**2** are third side views of the rear stacker assembly components **280**, **282** in FIGS. **32**A-**1** and **32**A-**2**, respectively, that are configured to be assembled together to form an alternative assembled rear stacker assembly that can be installed in a stackable shelf to support fiber optic equipment. FIGS. **32**F-**1** and **32**F-**2** are bottom views of the rear stacker assembly components **280**, **282** in FIGS. **32**A-**1** and **32**A-**2**, respectively, that are configured to be assembled together to form an alternative assembled rear stacker assembly that can be installed in a stackable shelf to support fiber optic equipment.

Many modifications and other embodiments of the invention set forth herein will come to mind to one skilled in the art to which the invention pertains having the benefit of the teachings presented in the foregoing descriptions and the associated drawings. As discussed herein, a stacker assembly is any component, member, or assembly that is configurable to support fiber optic equipment at a different desired height or heights (e.g., U spaces) from a surface, including but not limited to the mounting surface **20** provided for the stackable shelves **10**, **10'** disclosed and discussed herein. As non-limiting examples set forth below, the stackable shelves disclosed herein can includes features which allow components to stack on it. These features could be holes, slots, or other geometries which allow other components to attach to the stackable shelf by snapping or sliding into place. Front stacker assemblies can serve several purposes. One is to provide the front stacker assemblies as one of the potential building blocks that allow for conversion among rack spacings. The stacker assemblies can also contain features to retain fiber optic panels, fiber optic modules, cassettes, or other pieces of equipment. Connectors, splices, splitters, and other components may be held in place by the front stacker assemblies and/or the rear stacker assemblies.

The rear stacker assembly can assist in extending the support structure in the depth of the housing dimension. For instance, if the piece of equipment to be installed in the housing takes up a significant amount of the depth of the housing, it may require support throughout its length. By breaking up the stacking components into a front stacker assembly and a rear stacker assembly, the flexibility to accommodate more potential installation situations and configurations can be increased without dramatically increasing the complexity of the housing. The front routing guide can be provided to attach to both the stackable shelf and the front stacker assembly.

The removable panel clip, front stacker assembly, and rear stacker assembly may be removably attached to the stackable shelves to allow the stackable shelves to accommodate both fiber optic modules, cassettes and fiber optic panels, either together or separately, and whether or not the fiber optic modules, cassettes or fiber optic panels employ plungers or a track-type system as their method of retention in and to the stackable shelf. In this regard, the fiber optic housings in which the stackable shelf movably mounts can be compatible for either or both fiber optic modules, cassettes and/or fiber optic panels. Further, the fiber optic modules, cassettes and fiber optic panels may be interchangeable on the stackable shelf and, therefore, within the fiber optic housing. The stackable shelves, the removable panel clips, the front stacker assemblies, and the rear stacker assemblies may be constructed to snap together to easily facilitate initial configuration or subsequent reconfiguration of the stackable shelves.

The removable panel clips can serve as an adapter piece which allows plunger-style panels to be used where a track-type method of retention is used. The removable panel clips can contains protrusions on the exterior that snap into a raised portion of the stackable shelf and slide over the track feature. The front stacker assembly pieces and rear stacker assembly pieces can be composed of two (2) wedge-shaped pieces which snap together and in turn contain features which allow them to attach to the mounting surface of the stackable shelf. The front stacker assemblies may be shorter than the rear stacker assemblies. The stacker assemblies may allow a track-type module to be used in a housing that accommodates plunger-style panels. The removable panel clips can be used alone or in combination with the front stacker assembly and/or rear stacker assembly depending on the desired configuration. The material of construction may be metal or non-metal as examples. The removable panel clips could also be reversed one hundred eighty (180) degrees from the orientations discussed and illustrated above to allow the fiber optic panel position disposed therein to move independently, allowing the use of attenuators and/or other fiber optic devices, if desired.

The routing guides may be configured to rotatably attach to a mounting surface, such as, for example, a stackable shelf using an attachment feature. The attachment feature may have a pattern of specifically shaped holes in the surface of the stackable shelf that allows the routing guide to lock in place at various angles. The pattern of holes on the stackable shelf, or other mounting surface, can include an access hole and a plurality of locator holes. The base of the routing guide can be inserted into the access hole. The routing guide can lock into place by turning the routing guide counterclockwise as an example. A sloped profile of the base in combination with a "tooth" protruding from the base of the routing guide can be configured to snap into one of several locator holes allowing the routing guide to releasably lock into place at that angular position.

The placement of the access hole and locator holes in the mounting surface may resemble a "paw print" shape. The access hole can be shaped such that the routing guide can only be inserted in one particular orientation. The locator holes can be spaced such that after the routing guide has been inserted, it can be rotated counterclockwise allowing the protrusion or "tooth" on the routing guide base to interact with the holes to effectively lock it into an angled position. The holes can be situated on the centerline of the path of the tooth of the routing guide as it is rotated to provide multiple locking positions as desired. In this manner, the protrusion is movably positionable into different ones of the locator holes.

The base of the routing guides can have a spherical protrusion that engages the locator holes in the mounting surface. The spherical shape allows the guide to releasably lock in position, but also allows for movement and adjustability in

either direction if additional force is applied. The profile of the base is sloped so that constant tension is maintained between the underside of the mounting surface and the base. The routing guide may be provided as segments. In this regard, the routing guide may have diagonal posts on the interior of the upper portion. These posts provide different segments in the upper portion allowing for the segregation or separation of fiber types or bundles. For instance, if the user intends to store slack for both buffer tubes and 250 micrometers (μm) fiber, one type can be stored in the interior of the posts while the other can be stored underneath the posts inside the routing guide.

The routing guide may be constructed of metal or non-metal material as examples. Additionally, the shape of the routing guide could be a different shape than what is shown. Moreover, the footprint of the hole arrangement of the attachment feature could also vary. In addition, the features could be reversed—the hole could be on the routing guide and the tooth protrusion could be on the mounting surface.

Further, as used herein, it is intended that terms "fiber optic cables" and/or "optical fibers" include all types of single mode and multi-mode light waveguides, including one or more optical fibers that may be bare, upcoated, colored, buffered, tight-buffered, loose-tube, ribbonized and/or have other organizing or protective structure in a cable such as one or more tubes, strength members, jackets or the like. Likewise, other types of suitable optical fibers include bend-insensitive optical fibers, or any other expedient of a medium for transmitting light signals. An example of a bend-insensitive, or bend resistant, optical fiber is ClearCurve® Multimode fiber commercially available from Corning Incorporated. Suitable fibers of this type are disclosed, for example, in U.S. Patent Application Publication Nos. 2008/0166094 and 2009/0169163.

Therefore, it is to be understood that the embodiments are not to be limited to the specific embodiments disclosed and that modifications and other embodiments are intended to be included within the scope of the appended claims. It is intended that the embodiments cover the modifications and variations of this invention provided they come within the scope of the appended claims and their equivalents. Although specific terms are employed herein, they are used in a generic and descriptive sense only and not for purposes of limitation.

What is claimed is:

1. A fiber optic apparatus, comprising:

a fiber optic housing; and

one or more removable panel clips disposed in the fiber optic housing;

wherein each of the one or more removable panel clips includes at least one receptacle configured to receive an insert of a fiber optic panel to support the fiber optic panel in the fiber optic housing; and

wherein an opening in the one or more removable panel clips is configured to receive a rail system disposed in the fiber optic housing to attach the one more removable panel clips to the fiber optic housing.

2. The fiber optic apparatus of claim **1**, wherein the fiber optic housing is also configured to support one or more fiber optic modules and one or more fiber optic panels interchangeably.

3. The fiber optic apparatus of claim **2**, wherein the fiber optic housing is configured to support the one or more fiber optic modules without employing the one or more removable panel clips.

4. The fiber optic apparatus of claim **1**, wherein each of the one or more removable panel clips is disposed in the fiber optic housing to support fiber optic panels in a horizontal orientation.

5. The fiber optic apparatus of claim **1**, wherein each of the one or more removable panel clips is disposed in the fiber optic housing to support fiber optic panels in a vertical orientation.

6. The fiber optic apparatus of claim **1**, wherein each of the one or more removable panel clips comprises a flange configured to be inserted into an opening disposed in the fiber optic housing to attach the one more removable panel clips to the fiber optic housing.

7. The fiber optic apparatus of claim **6**, wherein the flange is configured to be inserted in a first area of the opening and slid into a second area of the opening to attach the one or more removable panel clips to the fiber optic housing.

8. The fiber optic apparatus of claim **6**, further comprising a protrusion disposed in each of the one or more removable panel clips configured to be inserted into the opening.

9. The fiber optic apparatus of claim **6**, wherein the flange is arcuate-shaped.

10. The fiber optic apparatus of claim **6**, wherein the flange is disposed in a first side of the one or more removable panel clips, and the receptacle is disposed in a second side adjacent to the first side of the one or more removable panel clips.

11. The fiber optic apparatus of claim **10**, wherein the first side is orthogonal to the second side.

12. The fiber optic apparatus of claim **10**, further comprising at least one extender disposed between the flange and the first side to dispose the flange a distance away from the first side.

13. The fiber optic apparatus of claim **1**, wherein the rail system is configured to support a fiber optic module in the fiber optic housing when a removable panel clip is not attached to the rail system.

14. The fiber optic apparatus of claim **1**, wherein the opening is disposed in a first side of the one or more removable panel clips, and the receptacle is disposed in a second side adjacent to the first side of the one or more removable panel clips.

15. The fiber optic apparatus of claim **14**, wherein the first side is orthogonal to the second side.

16. The fiber optic apparatus of claim **1**, further comprising a protrusion disposed in each of the one or more removable panel clips configured to be inserted into an opening in the fiber optic housing to secure the one or more removable panel clips to the fiber optic housing.

17. The fiber optic apparatus of claim **1**, wherein each of the one or more removable panel clips is attached in a base of the fiber optic housing.

18. The fiber optic apparatus of claim **17**, wherein each of the one or more removable panel clips is disposed in an opening in the base.

19. The fiber optic apparatus of claim **17**, wherein the rail system is disposed in the base, and each of the one or more removable panel clips is attached to the rail system.

20. The fiber optic apparatus of claim **19**, wherein the rail system comprises a rail guide that receives an opening disposed in a removable panel clip among the one or more removable panel clips to secure the removable panel clip to the fiber optic housing.

21. A method of supporting fiber optic panels in a fiber optic housing configured to support fiber optic modules, the method comprising:

attaching a removable panel clip that includes at least one receptacle in the fiber optic housing, wherein said

attaching comprises inserting an opening disposed in the removable panel clip over a rail guide of a rail system disposed in the fiber optic housing;

inserting a fiber optic panel in the fiber optic housing such that at least one insert of the fiber optic panel is aligned with the at least one receptacle; and

inserting the at least one insert into the at least one receptacle to support the fiber optic panel in the fiber optic housing.

22. The method of claim **21**, further comprising:

removing the fiber optic panel from a position in the fiber optic housing by removing the at least one insert of the fiber optic panel from the at least one receptacle of the removable panel clip;

removing the removable panel clip from the fiber optic housing; and

installing a fiber optic module in the position in the fiber optic housing.

23. The method of claim **21**, further comprising attaching the removable panel clip in the fiber optic housing such that the removable panel clip is disposed in the fiber optic housing to support the fiber optic panels in a horizontal orientation.

24. The method of claim **21**, further comprising attaching the removable panel clip in the fiber optic housing such that the removable panel clip is disposed in the fiber optic housing to support the fiber optic panels in a horizontal orientation.

25. The method of claim **21**, wherein attaching the removable panel clip in the fiber optic housing comprises inserting a flange disposed in the removable panel clip into an opening disposed in the fiber optic housing.

26. The method of claim **25**, wherein attaching the removable panel clip in the fiber optic housing further comprises inserting the flange into a first area of the opening disposed in the fiber optic housing and thereafter sliding the flange into a second area of the opening disposed in the fiber optic housing.

27. The method of claim **25**, further comprising inserting a protrusion disposed in the removable panel clip into the opening disposed in the fiber optic housing.

28. The method of claim **21**, wherein attaching the removable panel clip in the fiber optic housing comprises attaching the removable panel clip to a base of the fiber optic housing.

29. The method of claim **28**, wherein attaching the removable panel clip in the fiber optic housing further comprises inserting a portion of the removable panel clip into an opening in the base.

30. A fiber optic shelf configured to be supported in a fiber optic housing, comprising:

a mounting surface; and

one or more removable panel clips attached to the mounting surface;

wherein each of the one or more removable panel clips includes at least one receptacle configured to receive an insert of a fiber optic panel to support the fiber optic panel to the mounting surface;

wherein an opening in the one or more removable panel clips is configured to receive a rail system disposed in the fiber optic housing to attach the one or more removable panel clips to the fiber optic housing.

31. The fiber optic shelf of claim **30**, wherein the mounting surface is also configurable to support one or more fiber optic modules and one or more fiber optic panels interchangeably.

32. The fiber optic shelf of claim **31**, wherein the mounting surface is configured to support the one or more fiber optic modules without employing the one or more removable panel clips.

33. The fiber optic shelf of claim **30**, wherein each of the one or more removable panel clips is disposed in the mounting surface to support fiber optic panels in a horizontal orientation.

34. The fiber optic shelf of claim **30**, wherein each of the one or more removable panel clips is attached to a removable stacker assembly disposed in the mounting surface.

35. The fiber optic shelf of claim **34**, further comprising a plurality of removable stacker assemblies stacked in relation to each other, and wherein the one or more removable panel clips are comprised of a plurality of removable panel clips, each one of which is attached to a removable stacker assembly among the plurality of removable stacker assemblies.

36. The fiber optic shelf of claim **34**, further comprising at least one opening disposed in the removable stacker assembly configured to receive a flange disposed in a removable panel clip among the one or more removable panel clips to attach the removable panel clip to the removable stacker assembly.

37. The fiber optic shelf of claim **36**, wherein the at least one opening is comprised of a first opening disposed on a first side of the removable stacker assembly and a second opening disposed on a second side of the removable stacker assembly opposite of the first side, each of the first opening and the second opening configured to receive the flange disposed in a removable panel clip among the one or more removable panel clips to attach the removable panel clip to the removable stacker assembly.

38. The fiber optic shelf of claim **36**, wherein the flange is configured to be inserted in a first area of the at least one opening and slid into a second area of the at least one opening to attach the removable panel clip to the removable stacker assembly.

39. The fiber optic shelf of claim **36**, further comprising a protrusion disposed in the removable panel clip configured to be inserted into the at least one opening.

40. The fiber optic shelf of claim **39**, wherein the flange is disposed in a first side of the removable panel clip, and the receptacle is disposed in adjacent second side adjacent to the first side of the removable panel clip.

41. A method of supporting fiber optic panels in a shelf comprising a rail system configured to support fiber optic modules, comprising:

attaching a removable panel clip that includes at least one receptacle to a mounting surface of the shelf configured to support the fiber optic modules, wherein said attaching comprises receiving the rail system in an opening disposed in the removable panel clip;

installing a fiber optic panel on the mounting surface such that at least one insert of the fiber optic panel is aligned with the at least one receptacle; and

inserting the at least one insert into the at least one receptacle to support the fiber optic panel on the mounting surface.

42. The method of claim **41**, further comprising inserting the mounting surface supporting at least one fiber optic panel in a fiber optic housing.

43. The method of claim **41**, further comprising:

removing the fiber optic panel from a position on the mounting surface by removing the at least one insert of the fiber optic panel from the at least one receptacle of the removable panel clip;

removing the removable panel clip from the mounting surface; and

installing a fiber optic module in the position on the mounting surface.

44. The method of claim **41**, wherein installing the fiber optic panel on the mounting surface comprises inserting the

fiber optic panel in the mounting surface in a horizontal position such that the at least one insert of the fiber optic panel is aligned with the at least one receptacle.

45. The method of claim **41**, wherein attaching the removable panel clip further comprises attaching the removable panel clip to a removable stacker assembly disposed in the mounting surface.

46. The method claim **45**, further comprising stacking a plurality of removable stacker assemblies on the mounting surface and attaching each of a plurality of the removable panel clips to one of the plurality of removable stacker assemblies.

47. The method of claim **45**, wherein attaching the removable panel clip further comprises inserting a flange disposed in the removable panel clip into an opening disposed in the removable stacker assembly.

48. The method of claim **47**, wherein attaching the removable panel clip further comprises sliding the flange from a first area in the opening disposed in the removable stacker assembly into a second area of the opening disposed in the removable stacker assembly.

49. The method of claim **47**, wherein attaching the removable panel clip further comprises inserting a protrusion disposed in the removable panel clip into the opening disposed in the removable stacker assembly.

* * * * *