US008712206B2

(12) **United States Patent**
Cooke et al.

(10) **Patent No.: US 8,712,206 B2**
(45) **Date of Patent: Apr. 29, 2014**

(54) **HIGH-DENSITY FIBER OPTIC MODULES AND MODULE HOUSINGS AND RELATED EQUIPMENT**

(75) Inventors: **Terry L. Cooke**, Hickory, NC (US); **Gerald J. Davis**, Haslet, TX (US); **David L. Dean, Jr.**, Hickory, NC (US); **Marco A. Gonzalez Garcia**, Hickory, NC (US); **Tory A. Klavuhn**, Newton, NC (US); **Manuel A. Lopez Sanchez**, Tamaulipas (MX); **Brian K. Rhoney**, Hickory, NC (US); **Alan W. Ugolini**, Hickory, NC (US)

(73) Assignee: **Corning Cable Systems LLC**, Hickory, NC (US)

(*) Notice: Subject to any disclaimer, the term of this patent is extended or adjusted under 35 U.S.C. 154(b) by 339 days.

(21) Appl. No.: **12/771,473**

(22) Filed: **Apr. 30, 2010**

(65) **Prior Publication Data**

US 2010/0322579 A1 Dec. 23, 2010

Related U.S. Application Data

(60) Provisional application No. 61/218,870, filed on Jun. 19, 2009.

(51) **Int. Cl.**
G02B 6/00 (2006.01)

(52) **U.S. Cl.**
USPC **385/135**; 385/134

(58) **Field of Classification Search**
USPC 385/134, 135
See application file for complete search history.

(56) **References Cited**

U.S. PATENT DOCUMENTS

620,013	A	2/1899	Barnes
2,614,685	A	10/1952	Miller
3,175,873	A	3/1965	Blomquist et al.
3,212,192	A	10/1965	Bachmann et al.
3,433,886	A	3/1969	Myers
3,568,263	A	3/1971	Meehan

(Continued)

FOREIGN PATENT DOCUMENTS

CA	2029592	A1	5/1992
CA	2186314	A1	4/1997

(Continued)

OTHER PUBLICATIONS

Non-Final Office Action for U.S. Appl. No. 12/953,039 mailed Jan. 11, 2013, 6 pages.

(Continued)

Primary Examiner — Sarah Hahm

(57) **ABSTRACT**

High-density fiber optic modules and fiber optic module housings and related equipment are disclosed. In certain embodiments, a front opening of a fiber optic module and/or fiber optic module housing is configured to receive fiber optic components. The width and/or height of the front opening can be provided according to a designed relationship to a width and/or height, respectively, of a front side of a main body of the fiber optic module and/or fiber optic module housing. In this manner, a high density of fiber optic components and/or connections for a given space of the front side of the fiber optic module can be supported by the fiber optic module and/or fiber optic module housing. The fiber optic modules and fiber optic module housings disclosed herein can be disposed in fiber optic equipment including but not limited to a fiber optic chassis and a fiber optic equipment drawer.

73 Claims, 26 Drawing Sheets

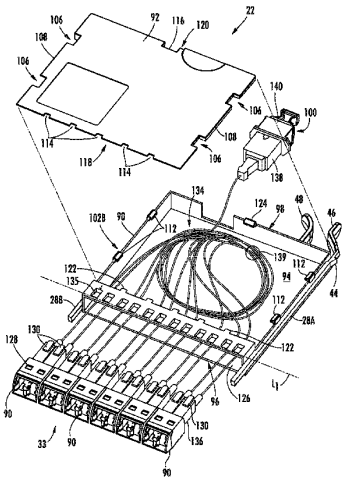

CommScope Ex. 1021

(56) **References Cited**

U.S. PATENT DOCUMENTS

3,646,244	A	2/1972	Cole
3,880,396	A	4/1975	Freiberger et al.
3,906,592	A	9/1975	Sakasegawa et al.
3,991,960	A	11/1976	Tanaka
4,047,797	A	9/1977	Arnold et al.
4,059,872	A	11/1977	Delesandri
4,119,285	A	10/1978	Bisping et al.
4,239,316	A	12/1980	Spaulding
4,285,486	A	8/1981	Von Osten et al.
4,354,731	A	10/1982	Mouissie
4,457,482	A	7/1984	Kitagawa
4,525,012	A	6/1985	Dunner
4,540,222	A	9/1985	Burrell
4,564,163	A	1/1986	Barnett
4,597,173	A	7/1986	Chino et al.
4,611,875	A	9/1986	Clarke et al.
4,635,886	A	1/1987	Santucci et al.
4,645,292	A	2/1987	Sammueller
4,657,340	A	4/1987	Tanaka et al.
4,681,288	A	7/1987	Nakamura
4,702,551	A	10/1987	Coulombe
4,736,100	A	4/1988	Vastagh
4,744,629	A	5/1988	Bertoglio et al.
4,747,020	A	5/1988	Brickley et al.
4,752,110	A	6/1988	Blanchet et al.
4,787,706	A	11/1988	Cannon, Jr. et al.
4,792,203	A	12/1988	Nelson et al.
4,798,432	A	1/1989	Becker et al.
4,808,774	A	2/1989	Crane
4,824,193	A	4/1989	Maeda et al.
4,824,196	A	4/1989	Bylander
4,826,277	A	5/1989	Weber et al.
4,838,643	A	6/1989	Hodges et al.
4,840,449	A	6/1989	Ghandeharizadeh
4,865,280	A	9/1989	Wollar
4,898,448	A	2/1990	Cooper
4,900,123	A	2/1990	Barlow et al.
4,911,662	A	3/1990	Debortoli et al.
4,948,220	A	8/1990	Violo et al.
4,949,376	A	8/1990	Nieves et al.
4,971,421	A	11/1990	Ori
4,991,928	A	2/1991	Zimmer
4,995,688	A	2/1991	Anton et al.
5,001,602	A	3/1991	Suffi et al.
5,005,941	A	4/1991	Barlow et al.
5,017,211	A	5/1991	Wenger et al.
5,023,646	A	6/1991	Ishida et al.
5,024,498	A	6/1991	Becker et al.
5,028,114	A	7/1991	Krausse et al.
5,037,175	A	8/1991	Weber
5,048,918	A	9/1991	Daems et al.
5,066,149	A	11/1991	Wheeler et al.
5,067,784	A	11/1991	Debortoli et al.
5,071,211	A	12/1991	Debortoli et al.
5,071,220	A	12/1991	Ruello et al.
5,073,042	A	12/1991	Mulholland et al.
5,074,635	A	12/1991	Justice et al.
5,076,688	A	12/1991	Bowen et al.
5,080,459	A	1/1992	Wettengel et al.
5,100,221	A	3/1992	Carney et al.
5,104,336	A	4/1992	Hatanaka et al.
5,125,060	A	6/1992	Edmundson
5,127,082	A	6/1992	Below et al.
5,127,851	A	7/1992	Hilbert et al.
5,129,030	A	7/1992	Petrunia
5,129,607	A	7/1992	Satoh
5,133,039	A	7/1992	Dixit
5,138,678	A	8/1992	Briggs et al.
5,138,688	A	8/1992	Debortoli
5,142,598	A	8/1992	Tabone
5,142,607	A	8/1992	Petrotta et al.
5,150,277	A	9/1992	Bainbridge et al.
D330,368	S	10/1992	Bourgeois et al.
5,152,760	A	10/1992	Latina
5,153,910	A	10/1992	Mickelson et al.
5,157,749	A	10/1992	Briggs et al.
5,167,001	A	11/1992	Debortoli et al.
5,170,452	A	12/1992	Ott
5,189,723	A	2/1993	Johnson et al.
5,199,099	A	3/1993	Dalgoutte
5,204,929	A	4/1993	Machall et al.
5,209,572	A	5/1993	Jordan
5,214,735	A	5/1993	Henneberger et al.
5,224,186	A	6/1993	Kishimoto et al.
5,231,687	A	7/1993	Handley
5,231,688	A	7/1993	Zimmer
5,233,674	A	8/1993	Vladic
5,239,609	A	8/1993	Auteri
5,243,679	A	9/1993	Sharrow et al.
5,253,320	A	10/1993	Takahashi et al.
5,260,957	A	11/1993	Hakimi et al.
5,261,633	A	11/1993	Mastro
5,265,187	A	11/1993	Morin et al.
5,274,731	A	12/1993	White
5,280,138	A	1/1994	Preston et al.
5,285,515	A	2/1994	Milanowski et al.
5,315,679	A	5/1994	Baldwin et al.
5,317,663	A	5/1994	Beard et al.
5,323,478	A	6/1994	Milanowski et al.
5,323,480	A	6/1994	Mullaney et al.
5,333,193	A	7/1994	Cote et al.
5,333,221	A	7/1994	Briggs et al.
5,333,222	A	7/1994	Belenkiy et al.
5,337,400	A	8/1994	Morin et al.
5,339,379	A	8/1994	Kutsch et al.
5,347,603	A	9/1994	Belenkiy et al.
5,353,367	A	10/1994	Czosnowski et al.
5,359,688	A	10/1994	Underwood
5,363,466	A	11/1994	Milanowski et al.
5,363,467	A	11/1994	Keith
5,366,388	A	11/1994	Freeman et al.
5,367,598	A	11/1994	Devenish, III et al.
5,373,421	A	12/1994	Detsikas et al.
5,383,051	A	1/1995	Delrosso et al.
5,390,272	A	2/1995	Repta et al.
5,398,295	A	3/1995	Chang et al.
5,398,820	A	3/1995	Kiss
5,399,814	A	3/1995	Staber et al.
5,401,193	A	3/1995	Lo Cicero et al.
5,402,515	A	3/1995	Vidacovich et al.
5,408,557	A	4/1995	Hsu
RE34,955	E	5/1995	Anton et al.
5,412,751	A	5/1995	Siemon et al.
5,416,837	A	5/1995	Cote et al.
5,418,874	A	5/1995	Carlisle et al.
5,420,956	A	5/1995	Grugel et al.
5,420,958	A	5/1995	Henson et al.
5,421,532	A	6/1995	Richter
5,438,641	A	8/1995	Malacarne
5,442,725	A	8/1995	Peng
5,442,726	A	8/1995	Howard et al.
5,443,232	A	8/1995	Kesinger et al.
5,444,804	A	8/1995	Yui et al.
5,448,015	A	9/1995	Jamet et al.
5,450,518	A	9/1995	Burek et al.
5,458,019	A	10/1995	Trevino
5,471,555	A	11/1995	Braga et al.
5,479,505	A	12/1995	Butler et al.
5,481,634	A	1/1996	Anderson et al.
5,481,939	A	1/1996	Bernardini
5,490,229	A	2/1996	Ghandeharizadeh et al.
5,497,416	A	3/1996	Butler, III et al.
5,497,444	A	3/1996	Wheeler
5,511,144	A	4/1996	Hawkins et al.
5,511,798	A	4/1996	Kawamoto et al.
5,519,804	A	5/1996	Burek et al.
5,530,786	A	6/1996	Radliff et al.
5,535,970	A	7/1996	Gobbi
5,542,015	A	7/1996	Hultermans
5,546,495	A	8/1996	Bruckner et al.
5,548,641	A	8/1996	Butler et al.
5,553,183	A	9/1996	Bechamps
5,553,186	A	9/1996	Allen
5,572,617	A	11/1996	Bernhardt et al.

(56) **References Cited**

U.S. PATENT DOCUMENTS

5,575,680	A	11/1996	Suffi
5,577,151	A	11/1996	Hoffer
5,590,234	A	12/1996	Pulido
5,595,507	A	1/1997	Braun et al.
5,596,670	A	1/1997	Debortoli et al.
5,600,020	A	2/1997	Wehle et al.
5,602,954	A	2/1997	Nolf et al.
5,608,606	A	3/1997	Blaney
5,613,030	A	3/1997	Hoffer et al.
5,617,501	A	4/1997	Miller et al.
5,638,474	A	6/1997	Lampert et al.
5,640,476	A	6/1997	Womack et al.
5,640,482	A	6/1997	Barry et al.
5,647,043	A	7/1997	Anderson et al.
5,647,045	A	7/1997	Robinson et al.
5,650,334	A	7/1997	Zuk et al.
5,668,911	A	9/1997	Debortoli
5,671,273	A	9/1997	Lanquist
5,689,605	A	11/1997	Cobb et al.
5,689,607	A	11/1997	Vincent et al.
5,694,511	A	12/1997	Pimpinella et al.
5,701,380	A	12/1997	Larson et al.
5,704,573	A	1/1998	de Beers et al.
5,708,742	A	1/1998	Beun et al.
5,708,751	A	1/1998	Mattei
5,710,851	A	1/1998	Walter et al.
5,717,810	A	2/1998	Wheeler
5,734,776	A	3/1998	Puetz
5,740,300	A	4/1998	Hodge
5,742,982	A	4/1998	Dodd et al.
5,751,874	A	5/1998	Chudoba et al.
5,751,882	A	5/1998	Daems et al.
5,758,003	A	5/1998	Wheeler et al.
5,758,004	A	5/1998	Alarcon et al.
5,761,026	A	6/1998	Robinson et al.
5,769,908	A	6/1998	Koppelman
5,774,612	A	6/1998	Belenkiy et al.
5,778,122	A	7/1998	Giebel et al.
5,778,130	A	7/1998	Walters et al.
5,781,686	A	7/1998	Robinson et al.
5,790,741	A	8/1998	Vincent et al.
5,793,920	A	8/1998	Wilkins et al.
5,793,921	A	8/1998	Wilkins et al.
5,796,908	A	8/1998	Vicory
5,823,646	A	10/1998	Arizpe et al.
5,825,955	A	10/1998	Ernst et al.
5,825,961	A	10/1998	Wilkins et al.
5,828,807	A	10/1998	Tucker et al.
5,832,162	A	11/1998	Sarbell
5,835,657	A	11/1998	Suarez et al.
5,835,658	A	11/1998	Smith
5,862,290	A	1/1999	Burek et al.
5,870,519	A	2/1999	Jenkins et al.
5,874,733	A	2/1999	Silver et al.
5,877,565	A	3/1999	Hollenbach et al.
5,880,864	A	3/1999	Williams et al.
5,881,200	A	3/1999	Burt
5,883,995	A	3/1999	Lu
5,884,003	A	3/1999	Cloud et al.
5,887,095	A	3/1999	Nagase et al.
5,887,106	A	3/1999	Cheeseman et al.
5,892,877	A	4/1999	Meyerhoefer
5,894,540	A	4/1999	Drewing
5,901,220	A	5/1999	Garver et al.
5,903,693	A	5/1999	Brown
5,906,342	A	5/1999	Kraus
5,909,298	A	6/1999	Shimada et al.
5,913,006	A	6/1999	Summach
5,914,976	A	6/1999	Jayaraman et al.
5,915,055	A	6/1999	Bennett et al.
5,923,804	A	7/1999	Rosson
5,930,425	A	7/1999	Abel et al.
5,933,557	A	8/1999	Ott
5,943,460	A	8/1999	Mead et al.
5,945,633	A	8/1999	Ott et al.
5,946,440	A	8/1999	Puetz
5,949,946	A	9/1999	Debortoli et al.
5,953,962	A	9/1999	Hewson
5,956,439	A	9/1999	Pimpinella
5,956,444	A	9/1999	Duda et al.
5,956,449	A	9/1999	Otani et al.
5,966,492	A	10/1999	Bechamps et al.
5,969,294	A	10/1999	Eberle et al.
5,975,769	A	11/1999	Larson et al.
5,978,540	A	11/1999	Bechamps et al.
5,980,303	A	11/1999	Lee et al.
5,993,071	A	11/1999	Hultermans
5,995,700	A	11/1999	Burek et al.
5,999,393	A	12/1999	Brower
6,001,831	A	12/1999	Papenfuhs et al.
6,009,224	A	12/1999	Allen
6,009,225	A	12/1999	Ray et al.
6,011,831	A	1/2000	Nieves et al.
6,027,252	A	2/2000	Erdman et al.
6,044,193	A	3/2000	Szentesi et al.
6,058,235	A	5/2000	Hiramatsu et al.
6,061,492	A	5/2000	Strause et al.
6,078,661	A	6/2000	Arnett et al.
6,079,881	A	6/2000	Roth
6,127,627	A	10/2000	Daoud
6,130,983	A	10/2000	Cheng
6,134,370	A	10/2000	Childers et al.
6,149,313	A	11/2000	Giebel et al.
6,149,315	A	11/2000	Stephenson
6,151,432	A	11/2000	Nakajima et al.
6,160,946	A	12/2000	Thompson et al.
6,170,784	B1	1/2001	MacDonald et al.
6,175,079	B1	1/2001	Johnston et al.
6,181,861	B1	1/2001	Wenski et al.
6,188,687	B1	2/2001	Mussman et al.
6,188,825	B1	2/2001	Bandy et al.
6,192,180	B1	2/2001	Kim et al.
6,201,920	B1	3/2001	Noble et al.
6,208,796	B1	3/2001	Williams Vigliaturo
6,212,324	B1	4/2001	Lin et al.
6,215,938	B1	4/2001	Reitmeier et al.
6,216,987	B1	4/2001	Fukuo
6,227,717	B1	5/2001	Ott et al.
6,234,683	B1	5/2001	Waldron et al.
6,234,685	B1	5/2001	Carlisle et al.
6,236,795	B1	5/2001	Rodgers
6,240,229	B1	5/2001	Roth
6,243,522	B1	6/2001	Allan et al.
6,245,998	B1	6/2001	Curry et al.
6,263,141	B1	7/2001	Smith
6,265,680	B1	7/2001	Robertson
6,269,212	B1	7/2001	Schiattone
6,275,641	B1	8/2001	Daoud
6,278,829	B1	8/2001	BuAbbud et al.
6,278,831	B1	8/2001	Henderson et al.
D448,005	S	9/2001	Klein, Jr. et al.
6,292,614	B1	9/2001	Smith et al.
6,301,424	B1	10/2001	Hwang
6,307,997	B1	10/2001	Walters et al.
6,318,824	B1	11/2001	LaGrotta et al.
6,321,017	B1	11/2001	Janus et al.
6,322,279	B1	11/2001	Yamamoto et al.
6,325,549	B1	12/2001	Shevchuk
RE37,489	E	1/2002	Anton et al.
6,343,313	B1	1/2002	Salesky et al.
6,347,888	B1	2/2002	Puetz
6,353,696	B1	3/2002	Gordon et al.
6,353,697	B1	3/2002	Daoud
6,359,228	B1	3/2002	Strause et al.
6,363,200	B1	3/2002	Thompson et al.
6,370,309	B1	4/2002	Daoud
6,371,419	B1	4/2002	Ohnuki
6,375,129	B2	4/2002	Koziol
6,377,218	B1	4/2002	Nelson et al.
6,379,052	B1	4/2002	De Jong et al.
6,385,374	B2	5/2002	Kropp
6,385,381	B1	5/2002	Janus et al.
6,389,214	B1	5/2002	Smith et al.
6,397,166	B1	5/2002	Leung et al.

(56) **References Cited**

U.S. PATENT DOCUMENTS

6,398,149 B1 6/2002 Hines et al.
6,411,767 B1 6/2002 Burrous et al.
6,418,262 B1 7/2002 Puetz et al.
6,424,781 B1 7/2002 Puetz et al.
6,425,694 B1 7/2002 Szilagyi et al.
6,427,045 B1 7/2002 Matthes et al.
6,431,762 B1 8/2002 Taira et al.
6,434,313 B1 8/2002 Clapp, Jr. et al.
6,438,310 B1 8/2002 Lance et al.
6,452,925 B1 9/2002 Sistanizadeh et al.
6,456,773 B1 9/2002 Keys
6,464,402 B1 10/2002 Andrews et al.
6,466,724 B1 10/2002 Glover et al.
6,469,905 B1 10/2002 Hwang
D466,087 S 11/2002 Cuny et al.
6,478,472 B1 11/2002 Anderson et al.
6,480,487 B1 11/2002 Wegleitner et al.
6,480,660 B1 11/2002 Reitmeier et al.
6,483,977 B2 11/2002 Battey et al.
6,484,958 B1 11/2002 Xue et al.
6,496,640 B1 12/2002 Harvey et al.
6,504,988 B1 1/2003 Trebesch et al.
6,507,980 B2 1/2003 Bremicker
6,510,274 B1 1/2003 Wu et al.
6,532,332 B2 3/2003 Solheid et al.
6,533,472 B1 3/2003 Dinh et al.
6,535,397 B2 3/2003 Clark et al.
6,535,682 B1 3/2003 Puetz et al.
6,539,147 B1 3/2003 Mahony
6,539,160 B2 3/2003 Battey et al.
6,542,688 B1 4/2003 Battey et al.
6,550,977 B2 4/2003 Hizuka
6,554,485 B1 4/2003 Beatty et al.
6,560,334 B1 5/2003 Mullaney et al.
6,567,601 B2 5/2003 Daoud et al.
6,571,048 B1 5/2003 Bechamps et al.
6,577,595 B1 6/2003 Counterman
6,577,801 B2 6/2003 Broderick et al.
6,579,014 B2 6/2003 Melton et al.
6,584,267 B1 6/2003 Caveney et al.
6,587,630 B2 7/2003 Spence et al.
6,588,938 B1 7/2003 Lampert et al.
6,591,051 B2 7/2003 Solheid et al.
6,592,266 B1 7/2003 Hankins et al.
6,597,670 B1 7/2003 Tweedy et al.
6,600,866 B2 7/2003 Gatica et al.
6,601,997 B2 8/2003 Ngo
6,612,515 B1 9/2003 Tinucci et al.
6,614,978 B1 9/2003 Caveney
6,614,980 B1 9/2003 Mahony
6,621,975 B2 9/2003 Laporte et al.
6,625,374 B2 9/2003 Holman et al.
6,625,375 B1 9/2003 Mahony
6,631,237 B2 10/2003 Knudsen et al.
6,640,042 B2 10/2003 Araki et al.
RE38,311 E 11/2003 Wheeler
6,644,863 B1 11/2003 Azami et al.
6,647,197 B1 11/2003 Marrs et al.
6,648,520 B2 11/2003 McDonald et al.
6,654,536 B2 11/2003 Battey et al.
6,668,127 B1 12/2003 Mahony
6,669,149 B2 12/2003 Akizuki
6,677,520 B1 1/2004 Kim et al.
6,679,604 B1 1/2004 Bove et al.
6,684,005 B1 1/2004 Egnell et al.
6,687,450 B1 2/2004 Kempeneers et al.
6,701,056 B2 3/2004 Burek et al.
6,710,366 B1 3/2004 Lee et al.
6,715,619 B2 4/2004 Kim et al.
6,719,149 B2 4/2004 Tomino
6,741,784 B1 5/2004 Guan
6,741,785 B2 5/2004 Barthel et al.
6,746,037 B1 6/2004 Kaplenski et al.
6,748,154 B2 6/2004 O'Leary et al.
6,748,155 B2 6/2004 Kim et al.
6,758,600 B2 7/2004 Del Grosso et al.
6,768,860 B2 7/2004 Liberty
6,771,861 B2 8/2004 Wagner et al.
6,773,297 B2 8/2004 Komiya
6,778,525 B1 8/2004 Baum et al.
6,778,752 B2 8/2004 Laporte et al.
6,786,647 B1 9/2004 Hinds et al.
6,788,871 B2 9/2004 Taylor
6,792,190 B2 9/2004 Xin et al.
6,798,751 B1 9/2004 Voit et al.
6,804,447 B2 10/2004 Smith et al.
6,810,194 B2 10/2004 Griffiths et al.
6,813,412 B2 11/2004 Lin
6,816,660 B2 11/2004 Nashimoto
6,818,834 B1 11/2004 Lin
6,819,856 B2 11/2004 Dagley et al.
6,819,857 B2 11/2004 Douglas et al.
6,826,174 B1 11/2004 Erekson et al.
6,826,346 B2 11/2004 Sloan et al.
6,839,428 B2 1/2005 Brower et al.
6,839,438 B1 1/2005 Riegelsberger et al.
6,840,815 B2 1/2005 Musolf et al.
6,845,207 B2 1/2005 Schray
6,848,862 B1 2/2005 Schlig
6,850,685 B2 2/2005 Tinucci et al.
6,853,637 B1 2/2005 Norrell et al.
6,854,894 B1 2/2005 Yunker et al.
6,856,334 B1 2/2005 Fukui
6,865,331 B2 3/2005 Mertesdorf
6,865,334 B2 3/2005 Cooke et al.
6,866,541 B2 3/2005 Barker et al.
6,868,216 B1 3/2005 Gehrke
6,869,227 B2 3/2005 Del Grosso et al.
6,870,734 B2 3/2005 Mertesdorf et al.
6,870,997 B2 3/2005 Cooke
6,879,545 B2 4/2005 Cooke et al.
6,915,058 B2 7/2005 Pons
6,920,273 B2 7/2005 Knudsen
6,920,274 B2 * 7/2005 Rapp et al. 385/135
6,923,406 B2 8/2005 Akizuki
6,925,241 B2 8/2005 Bohle et al.
6,934,451 B2 8/2005 Cooke et al.
6,934,456 B2 8/2005 Ferris et al.
6,935,598 B2 8/2005 Sono et al.
6,937,807 B2 8/2005 Franklin et al.
6,944,383 B1 9/2005 Herzog et al.
6,944,389 B2 9/2005 Giraud et al.
6,952,530 B2 10/2005 Helvajian et al.
6,963,690 B1 11/2005 Kassal et al.
6,968,107 B2 11/2005 Belardi et al.
6,968,111 B2 11/2005 Trebesch et al.
6,985,665 B2 1/2006 Baechtle
6,993,237 B2 1/2006 Cooke et al.
7,000,784 B2 2/2006 Canty et al.
7,005,582 B2 2/2006 Muller et al.
7,006,748 B2 2/2006 Dagley et al.
7,007,296 B2 2/2006 Rakib
7,027,695 B2 4/2006 Cooke et al.
7,027,706 B2 4/2006 Diaz et al.
7,031,588 B2 4/2006 Cowley et al.
7,035,510 B2 4/2006 Zimmel et al.
7,038,137 B2 5/2006 Grubish et al.
7,054,513 B2 5/2006 Herz et al.
7,066,748 B2 6/2006 Bricaud et al.
7,068,907 B2 6/2006 Schray
7,070,459 B2 7/2006 Denovich et al.
7,079,744 B2 7/2006 Douglas et al.
7,090,406 B2 8/2006 Melton et al.
7,090,407 B2 8/2006 Melton et al.
7,094,095 B1 8/2006 Caveney
7,097,047 B2 8/2006 Lee et al.
7,101,093 B2 9/2006 Hsiao et al.
7,102,884 B2 9/2006 Mertesdorf et al.
7,103,255 B2 9/2006 Reagan et al.
7,110,654 B2 9/2006 Dillat
7,111,990 B2 9/2006 Melton et al.
7,113,679 B2 9/2006 Melton et al.
7,113,686 B2 9/2006 Bellekens et al.
7,113,687 B2 9/2006 Womack et al.

(56) **References Cited**

U.S. PATENT DOCUMENTS

7,116,491	B1	10/2006	Willey et al.
7,116,883	B2	10/2006	Kline et al.
7,118,281	B2	10/2006	Chiu et al.
7,118,405	B2	10/2006	Peng
7,120,347	B2	10/2006	Blackwell, Jr. et al.
7,120,348	B2	10/2006	Trebesch et al.
7,120,349	B2	10/2006	Elliott
7,128,471	B2	10/2006	Wilson
7,139,462	B1	11/2006	Richtman
7,140,903	B2	11/2006	Pulizzi et al.
7,171,099	B2	1/2007	Barnes et al.
7,171,121	B1	1/2007	Skarica et al.
7,181,142	B1	2/2007	Xu et al.
7,193,783	B2	3/2007	Willey et al.
7,194,181	B2	3/2007	Holmberg et al.
7,195,521	B2	3/2007	Musolf et al.
7,200,314	B2	4/2007	Womack et al.
7,200,316	B2	4/2007	Giraud et al.
7,220,065	B2	5/2007	Han et al.
7,221,832	B2	5/2007	Tinucci
7,228,036	B2	6/2007	Elkins, II et al.
7,231,125	B2	6/2007	Douglas et al.
7,234,878	B2	6/2007	Yamauchi et al.
7,236,677	B2	6/2007	Escoto et al.
7,239,789	B2	7/2007	Grubish et al.
7,245,809	B1	7/2007	Gniadek et al.
7,259,325	B2	8/2007	Pincu et al.
7,266,283	B2	9/2007	Kline et al.
7,270,485	B1	9/2007	Robinson et al.
7,272,291	B2	9/2007	Bayazit et al.
7,274,852	B1	9/2007	Smrha et al.
7,287,913	B2	10/2007	Keenum et al.
7,289,731	B2	10/2007	Thinguldstad
7,292,769	B2	11/2007	Watanabe et al.
7,298,950	B2	11/2007	Frohlich
7,300,216	B2	11/2007	Morse et al.
7,300,308	B2	11/2007	Laursen et al.
7,302,149	B2	11/2007	Swam et al.
7,302,153	B2	11/2007	Thom
7,302,154	B2	11/2007	Trebesch et al.
7,308,184	B2	12/2007	Barnes et al.
7,310,471	B2	12/2007	Bayazit et al.
7,310,472	B2	12/2007	Haberman
7,315,681	B2	1/2008	Kewitsch
7,325,975	B2	2/2008	Yamada et al.
7,330,625	B2	2/2008	Barth
7,330,626	B2	2/2008	Kowalczyk et al.
7,330,629	B2	2/2008	Cooke et al.
7,331,718	B2	2/2008	Yazaki et al.
7,340,145	B2	3/2008	Allen
7,349,615	B2	3/2008	Frazier et al.
7,373,071	B2	5/2008	Douglas et al.
7,376,321	B2	5/2008	Bolster et al.
7,376,323	B2	5/2008	Zimmel
7,391,952	B1	6/2008	Ugolini et al.
7,397,996	B2	7/2008	Herzog et al.
7,400,813	B2	7/2008	Zimmel
7,404,736	B2	7/2008	Herbst et al.
7,409,137	B2	8/2008	Barnes
7,414,198	B2	8/2008	Stansbie et al.
7,417,188	B2	8/2008	McNutt et al.
7,418,182	B2	8/2008	Krampotich
7,418,184	B1	8/2008	Gonzales et al.
7,421,182	B2	9/2008	Bayazit et al.
7,428,363	B2	9/2008	Leon et al.
7,437,049	B2	10/2008	Krampotich
7,439,453	B2	10/2008	Murano et al.
7,454,113	B2	11/2008	Barnes
7,460,757	B2	12/2008	Hoehne et al.
7,460,758	B2	12/2008	Xin
7,461,981	B2	12/2008	Yow, Jr. et al.
7,462,779	B2	12/2008	Caveney et al.
7,463,810	B2	12/2008	Bayazit et al.
7,463,811	B2	12/2008	Trebesch et al.
7,469,090	B2	12/2008	Ferris et al.
7,471,867	B2	12/2008	Vogel et al.
7,474,828	B2	1/2009	Leon et al.
7,477,824	B2	1/2009	Reagan et al.
7,477,826	B2	1/2009	Mullaney et al.
7,480,438	B2	1/2009	Douglas et al.
7,488,205	B2	2/2009	Spisany et al.
7,493,002	B2	2/2009	Coburn et al.
7,496,269	B1	2/2009	Lee
7,499,622	B2	3/2009	Castonguay et al.
7,499,623	B2	3/2009	Barnes et al.
7,507,111	B2	3/2009	Togami et al.
7,509,015	B2	3/2009	Murano
7,509,016	B2	3/2009	Smith et al.
7,522,804	B2	4/2009	Araki et al.
7,523,898	B1	4/2009	Barry et al.
7,526,171	B2	4/2009	Caveney et al.
7,526,172	B2	4/2009	Gniadek et al.
7,526,174	B2	4/2009	Leon et al.
7,529,458	B2	5/2009	Spisany et al.
7,534,958	B2	5/2009	McNutt et al.
7,536,075	B2	5/2009	Zimmel
7,542,645	B1	6/2009	Hua et al.
7,555,193	B2	6/2009	Rapp et al.
7,558,458	B2	7/2009	Gronvall et al.
7,565,051	B2	7/2009	Vongseng
7,567,744	B2	7/2009	Krampotich et al.
7,570,860	B2	8/2009	Smrha et al.
7,570,861	B2	8/2009	Smrha et al.
7,577,331	B2	8/2009	Laurisch et al.
7,603,020	B1	10/2009	Wakileh et al.
7,607,938	B2	10/2009	Clark et al.
7,609,967	B2	10/2009	Hochbaum et al.
7,613,377	B2	11/2009	Gonzales et al.
7,620,272	B2	11/2009	Hino et al.
7,620,287	B2	11/2009	Appenzeller et al.
7,641,398	B2	1/2010	O'Riorden et al.
7,668,430	B2	2/2010	McClellan et al.
7,668,433	B2	2/2010	Bayazit et al.
7,672,561	B1	3/2010	Keith et al.
7,676,135	B2	3/2010	Chen
7,697,811	B2	4/2010	Murano et al.
7,715,125	B2	5/2010	Willey
7,715,683	B2	5/2010	Kowalczyk et al.
7,734,138	B2	6/2010	Bloodworth et al.
7,740,409	B2	6/2010	Bolton et al.
7,743,495	B2	6/2010	Mori et al.
7,756,382	B2	7/2010	Saravanos et al.
7,760,984	B2	7/2010	Solheid et al.
7,764,858	B2	7/2010	Bayazit et al.
7,764,859	B2	7/2010	Krampotich et al.
7,809,235	B2	10/2010	Reagan et al.
7,822,310	B2	10/2010	Castonguay et al.
7,850,372	B2	12/2010	Nishimura et al.
7,853,112	B2	12/2010	Zimmel et al.
7,856,166	B2	12/2010	Biribuze et al.
7,914,332	B2	3/2011	Song et al.
7,942,589	B2	5/2011	Yazaki et al.
7,945,135	B2	5/2011	Cooke et al.
7,945,136	B2	5/2011	Cooke et al.
7,970,250	B2	6/2011	Morris
8,014,171	B2	9/2011	Kelly et al.
8,014,646	B2	9/2011	Keith et al.
8,020,813	B1	9/2011	Clark et al.
8,059,932	B2	11/2011	Hill et al.
8,107,785	B2	1/2012	Berglund et al.
8,206,058	B2	6/2012	Vrondran et al.
8,472,773	B2	6/2013	de Jong
8,537,477	B2	9/2013	Shioda
2001/0010741	A1	8/2001	Hizuka
2001/0029125	A1	10/2001	Morita et al.
2002/0010818	A1	1/2002	Wei et al.
2002/0012353	A1	1/2002	Gerszberg et al.
2002/0034290	A1	3/2002	Pershan
2002/0037139	A1	3/2002	Asao et al.
2002/0064364	A1	5/2002	Battey et al.
2002/0131730	A1	9/2002	Keeble et al.
2002/0136519	A1	9/2002	Tinucci et al.
2002/0141724	A1	10/2002	Ogawa et al.
2002/0150372	A1	10/2002	Schray

(56) **References Cited**

U.S. PATENT DOCUMENTS

2002/0172467	A1	11/2002	Anderson et al.
2002/0181918	A1	12/2002	Spence et al.
2002/0181922	A1	12/2002	Xin et al.
2002/0191939	A1	12/2002	Daoud et al.
2002/0194596	A1	12/2002	Srivastava
2003/0007743	A1	1/2003	Asada
2003/0007767	A1	1/2003	Douglas et al.
2003/0021539	A1	1/2003	Kwon et al.
2003/0066998	A1	4/2003	Lee
2003/0086675	A1	5/2003	Wu et al.
2003/0095753	A1	5/2003	Wada et al.
2003/0147604	A1	8/2003	Tapia et al.
2003/0174996	A1	9/2003	Henschel et al.
2003/0180012	A1	9/2003	Deane et al.
2003/0183413	A1	10/2003	Kato
2003/0199201	A1	10/2003	Mullaney et al.
2003/0210882	A1	11/2003	Barthel et al.
2003/0223723	A1	12/2003	Massey et al.
2003/0223725	A1	12/2003	Laporte et al.
2003/0235387	A1	12/2003	Dufour
2004/0013389	A1	1/2004	Taylor
2004/0013390	A1	1/2004	Kim et al.
2004/0067036	A1	4/2004	Clark et al.
2004/0074852	A1	4/2004	Knudsen et al.
2004/0086238	A1	5/2004	Finona et al.
2004/0086252	A1	5/2004	Smith et al.
2004/0120679	A1	6/2004	Vincent et al.
2004/0147159	A1	7/2004	Urban et al.
2004/0151465	A1	8/2004	Krampotich et al.
2004/0175090	A1	9/2004	Vastmans et al.
2004/0192115	A1	9/2004	Bugg
2004/0208459	A1	10/2004	Mizue et al.
2004/0228598	A1	11/2004	Allen et al.
2004/0240827	A1	12/2004	Daoud et al.
2004/0240882	A1	12/2004	Lipski et al.
2004/0264873	A1	12/2004	Smith et al.
2005/0002633	A1	1/2005	Solheid et al.
2005/0008131	A1	1/2005	Cook
2005/0026497	A1	2/2005	Holliday
2005/0036749	A1	2/2005	Vogel et al.
2005/0074990	A1	4/2005	Shearman et al.
2005/0076149	A1	4/2005	McKown et al.
2005/0083959	A1	4/2005	Binder
2005/0107086	A1	5/2005	Tell et al.
2005/0111809	A1	5/2005	Giraud et al.
2005/0111810	A1	5/2005	Giraud et al.
2005/0123261	A1	6/2005	Bellekens et al.
2005/0129379	A1	6/2005	Reagan et al.
2005/0175293	A1	8/2005	Byers et al.
2005/0201073	A1	9/2005	Pincu et al.
2005/0232566	A1	10/2005	Rapp et al.
2005/0233647	A1	10/2005	Denovich et al.
2005/0254757	A1	11/2005	Ferretti, III et al.
2005/0281526	A1	12/2005	Vongseng et al.
2005/0281527	A1	12/2005	Wilson et al.
2006/0007562	A1	1/2006	Willey et al.
2006/0018448	A1	1/2006	Stevens et al.
2006/0018622	A1	1/2006	Caveney et al.
2006/0039290	A1	2/2006	Roden et al.
2006/0044774	A1	3/2006	Vasavda et al.
2006/0045458	A1	3/2006	Sasaki et al.
2006/0072606	A1	4/2006	Posthuma
2006/0077968	A1	4/2006	Pitsoulakis et al.
2006/0093303	A1	5/2006	Reagan et al.
2006/0110118	A1	5/2006	Escoto et al.
2006/0133759	A1	6/2006	Mullaney et al.
2006/0147172	A1	7/2006	Luther et al.
2006/0153517	A1	7/2006	Reagan et al.
2006/0160377	A1	7/2006	Huang
2006/0165365	A1	7/2006	Feustel et al.
2006/0165366	A1	7/2006	Feustel et al.
2006/0191700	A1	8/2006	Herzog et al.
2006/0193590	A1	8/2006	Puetz et al.
2006/0193591	A1	8/2006	Rapp et al.
2006/0198098	A1	9/2006	Clark et al.
2006/0215980	A1	9/2006	Bayazit et al.
2006/0269194	A1	11/2006	Luther et al.
2006/0269206	A1	11/2006	Zimmel
2006/0269208	A1	11/2006	Allen et al.
2006/0275008	A1	12/2006	Xin
2006/0275009	A1	12/2006	Ellison et al.
2006/0285812	A1	12/2006	Ferris et al.
2007/0003204	A1	1/2007	Makrides-Saravanos et al.
2007/0025070	A1	2/2007	Jiang et al.
2007/0031099	A1	2/2007	Herzog et al.
2007/0033629	A1	2/2007	McGranahan et al.
2007/0047894	A1	3/2007	Holmberg et al.
2007/0104447	A1	5/2007	Allen
2007/0127201	A1	6/2007	Mertesdorf et al.
2007/0131628	A1	6/2007	Mimlitch, III et al.
2007/0189692	A1	8/2007	Zimmel et al.
2007/0196071	A1	8/2007	Laursen et al.
2007/0221793	A1	9/2007	Kusuda et al.
2007/0237484	A1	10/2007	Reagan et al.
2007/0274718	A1	11/2007	Bridges et al.
2008/0011514	A1	1/2008	Zheng et al.
2008/0025683	A1	1/2008	Murano
2008/0031585	A1	2/2008	Solheid et al.
2008/0063350	A1	3/2008	Trebesch et al.
2008/0068788	A1	3/2008	Ozawa et al.
2008/0069511	A1	3/2008	Blackwell, Jr. et al.
2008/0069512	A1	3/2008	Barnes et al.
2008/0080826	A1	4/2008	Leon et al.
2008/0080827	A1	4/2008	Leon et al.
2008/0080828	A1	4/2008	Leon et al.
2008/0085094	A1	4/2008	Krampotich
2008/0089656	A1	4/2008	Wagner et al.
2008/0095541	A1	4/2008	Dallesasse
2008/0100440	A1	5/2008	Downie et al.
2008/0106871	A1	5/2008	James
2008/0112681	A1	5/2008	Battey et al.
2008/0118207	A1	5/2008	Yamamoto et al.
2008/0121423	A1	5/2008	Vogel et al.
2008/0124039	A1	5/2008	Gniadek et al.
2008/0131068	A1	6/2008	Mertesdorf et al.
2008/0145013	A1	6/2008	Escoto et al.
2008/0152294	A1	6/2008	Hirano et al.
2008/0166094	A1	7/2008	Bookbinder et al.
2008/0166131	A1	7/2008	Hudgins et al.
2008/0175550	A1	7/2008	Coburn et al.
2008/0175551	A1	7/2008	Smrha et al.
2008/0175552	A1	7/2008	Smrha et al.
2008/0193091	A1	8/2008	Herbst
2008/0205823	A1	8/2008	Luther et al.
2008/0205844	A1	8/2008	Castonguay et al.
2008/0212928	A1	9/2008	Kowalczyk et al.
2008/0219632	A1	9/2008	Smith et al.
2008/0219634	A1	9/2008	Rapp et al.
2008/0236858	A1	10/2008	Quijano
2008/0247723	A1	10/2008	Herzog et al.
2008/0267573	A1	10/2008	Douglas et al.
2008/0285934	A1	11/2008	Standish et al.
2008/0292261	A1	11/2008	Kowalczyk et al.
2008/0298763	A1	12/2008	Appenzeller et al.
2008/0304803	A1	12/2008	Krampotich et al.
2008/0310810	A1	12/2008	Gallagher
2009/0010607	A1	1/2009	Elisson et al.
2009/0016685	A1	1/2009	Hudgins et al.
2009/0022470	A1	1/2009	Krampotich
2009/0060439	A1	3/2009	Cox et al.
2009/0060440	A1	3/2009	Wright et al.
2009/0067800	A1	3/2009	Vazquez et al.
2009/0080849	A1	3/2009	Hankins et al.
2009/0097813	A1	4/2009	Hill
2009/0136194	A1	5/2009	Barnes
2009/0136196	A1	5/2009	Trebesch et al.
2009/0146342	A1	6/2009	Haney et al.
2009/0148117	A1	6/2009	Laurisch
2009/0169163	A1	7/2009	Abbott, III et al.
2009/0175588	A1	7/2009	Brandt et al.
2009/0180749	A1	7/2009	Douglas et al.
2009/0185782	A1	7/2009	Parikh et al.
2009/0191891	A1	7/2009	Ma et al.
2009/0194647	A1	8/2009	Keith

(56) **References Cited**

U.S. PATENT DOCUMENTS

2009/0196563	A1	8/2009	Mullsteff et al.
2009/0202214	A1	8/2009	Holmberg et al.
2009/0207577	A1	8/2009	Fransen et al.
2009/0208178	A1	8/2009	Kowalczyk et al.
2009/0208210	A1	8/2009	Trojer et al.
2009/0214171	A1	8/2009	Coburn et al.
2009/0220200	A1	9/2009	Sheau Tung Wong et al.
2009/0220204	A1	9/2009	Ruiz
2009/0226142	A1	9/2009	Barnes et al.
2009/0238531	A1	9/2009	Holmberg et al.
2009/0245743	A1	10/2009	Cote et al.
2009/0252472	A1	10/2009	Solheid et al.
2009/0257726	A1	10/2009	Redmann et al.
2009/0257727	A1	10/2009	Laurisch et al.
2009/0257754	A1	10/2009	Theodoras, II et al.
2009/0263096	A1	10/2009	Solheid et al.
2009/0263122	A1	10/2009	Helkey et al.
2009/0267865	A1	10/2009	Miller et al.
2009/0269016	A1	10/2009	Korampally et al.
2009/0269018	A1	10/2009	Frohlich et al.
2009/0274429	A1	11/2009	Krampotich et al.
2009/0274430	A1	11/2009	Krampotich et al.
2009/0274432	A1	11/2009	Iwaya
2009/0290842	A1	11/2009	Bran de Leon et al.
2009/0297111	A1	12/2009	Reagan et al.
2009/0304342	A1	12/2009	Adomeit et al.
2009/0324189	A1	12/2009	Hill et al.
2010/0003000	A1	1/2010	Rapp et al.
2010/0012671	A1	1/2010	Vrondran et al.
2010/0054681	A1	3/2010	Biribuze et al.
2010/0054682	A1	3/2010	Cooke et al.
2010/0054685	A1	3/2010	Cooke et al.
2010/0054687	A1	3/2010	Ye et al.
2010/0061691	A1	3/2010	Murano et al.
2010/0061693	A1	3/2010	Bran de Leon et al.
2010/0074587	A1	3/2010	Loeffelholz et al.
2010/0080517	A1	4/2010	Cline et al.
2010/0086267	A1	4/2010	Cooke et al.
2010/0086274	A1	4/2010	Keith
2010/0111483	A1	5/2010	Reinhardt et al.
2010/0119201	A1	5/2010	Smrha et al.
2010/0142544	A1	6/2010	Chapel et al.
2010/0142910	A1	6/2010	Hill et al.
2010/0150518	A1	6/2010	Leon et al.
2010/0158467	A1	6/2010	Hou et al.
2010/0166377	A1	7/2010	Nair et al.
2010/0178022	A1	7/2010	Schroeder et al.
2010/0202745	A1	8/2010	Sokolowski et al.
2010/0220967	A1	9/2010	Cooke et al.
2010/0278499	A1	11/2010	Mures et al.
2010/0296790	A1	11/2010	Cooke et al.
2010/0310225	A1	12/2010	Anderson et al.
2010/0310226	A1	12/2010	Wakileh et al.
2010/0316334	A1	12/2010	Kewitsch
2010/0322582	A1	12/2010	Cooke et al.
2010/0322583	A1	12/2010	Cooke et al.
2010/0329624	A1	12/2010	Zhou et al.
2011/0069931	A1	3/2011	Cote et al.
2011/0073730	A1	3/2011	Kitchen
2011/0085774	A1	4/2011	Murphy et al.
2011/0085776	A1	4/2011	Biribuze et al.
2011/0097053	A1	4/2011	Smith et al.
2011/0097977	A1	4/2011	Bubnick et al.
2011/0211799	A1	9/2011	Conner et al.
2011/0217016	A1	9/2011	Mullsteff
2011/0268404	A1	11/2011	Cote et al.
2011/0280537	A1	11/2011	Cowen et al.
2012/0051707	A1	3/2012	Barnes et al.
2012/0183263	A1	7/2012	Wu
2013/0077927	A1	3/2013	O'Connor

FOREIGN PATENT DOCUMENTS

CH	688705	A5	1/1998
DE	8711970	U1	10/1987
DE	3726718	A1	2/1989
DE	3726719	A1	2/1989
DE	4030301	A1	3/1992
DE	4231181	C1	8/1993
DE	20115940	U1	1/2002
DE	10338848	A1	3/2005
DE	202005009932	U1	11/2005
EP	0105597	A2	4/1984
EP	0250900	A2	1/1988
EP	0408266	A2	1/1991
EP	1041417	A1	8/1991
EP	0468671	A1	1/1992
EP	0490698	A1	6/1992
EP	0529830	A1	3/1993
EP	0544004	A1	6/1993
EP	0547778	A1	6/1993
EP	0581527	A1	2/1994
EP	0620462	A1	10/1994
EP	0693699	A1	1/1996
EP	0720322	A2	7/1996
EP	0940700	A2	9/1999
EP	0949522	A2	10/1999
EP	1041417	A2	10/2000
EP	1056177	A1	11/2000
EP	1065542	A1	1/2001
EP	1203974	A2	5/2002
EP	1289319	A2	3/2003
EP	1316829	A2	6/2003
EP	1621907	A1	2/2006
EP	1777563	A1	4/2007
FR	2378378	A1	8/1978
GB	2241591	A	9/1991
GB	2277812	A	11/1994
GB	2367379	A	4/2002
JP	3172806	A	7/1991
JP	5045541	A	2/1993
JP	06018749	A	1/1994
JP	7308011	A	11/1995
JP	8007308	A	1/1996
JP	8248235	A	9/1996
JP	8248237	A	9/1996
JP	3487946	A	10/1996
JP	8254620	A	10/1996
JP	3279474	A	10/1997
JP	9258033	A	10/1997
JP	9258055	A	10/1997
JP	2771870	B2	7/1998
JP	3448448	A	8/1998
JP	10227919	A	8/1998
JP	3478944	A	12/1998
JP	10332945	A	12/1998
JP	10339817	A	12/1998
JP	11023858	A	1/1999
JP	2000098138	A	4/2000
JP	2000098139	A	4/2000
JP	2000241631	A	9/2000
JP	2001004849	A	1/2001
JP	3160322	B2	4/2001
JP	2001133636	A	5/2001
JP	3173962	B2	6/2001
JP	3176906	B2	6/2001
JP	2001154030	A	6/2001
JP	2001159714	A	6/2001
JP	2002022974	A	1/2002
JP	2002169035	A	6/2002
JP	3312893	B2	8/2002
JP	2002305389	A	10/2002
JP	3344701	B2	11/2002
JP	2003029054	A	1/2003
JP	3403573	B2	5/2003
JP	2003169026	A	6/2003
JP	2003215353	A	7/2003
JP	2003344701	A	12/2003
JP	3516765	B2	4/2004
JP	200414931	A	5/2004

(56) **References Cited**

FOREIGN PATENT DOCUMENTS

JP	2004144808	A	5/2004
JP	2004514931	A	5/2004
JP	3542939	B2	7/2004
JP	2004246147	A	9/2004
JP	2004361652	A	12/2004
JP	2004361893	A	12/2004
JP	3107704	U	2/2005
JP	2005055748	A	3/2005
JP	2005062569	A	3/2005
JP	2005084241	A	3/2005
JP	2005148327	A	6/2005
JP	3763645	B2	4/2006
JP	3778021	B2	5/2006
JP	2006126513	A	5/2006
JP	2006126516	A	5/2006
JP	3794540	B2	7/2006
JP	2006227041	A1	8/2006
JP	3833638	B2	10/2006
JP	3841344	B2	11/2006
JP	3847533	B2	11/2006
JP	200747336	A	2/2007
JP	3896035	B2	3/2007
JP	2007067458	A1	3/2007
JP	3934052	B2	6/2007
JP	3964191	B2	8/2007
JP	3989853	B2	10/2007
JP	4026244	B2	12/2007
JP	4029494	B2	1/2008
JP	4065223	B2	3/2008
JP	4093475	B2	6/2008
JP	4105696	B2	6/2008
JP	4112437	B2	7/2008
JP	4118862	B2	7/2008
JP	2008176118	A1	7/2008
JP	2008180817	A1	8/2008
JP	4184329	B2	11/2008
JP	2008542822	T	11/2008
JP	2009503582	T	1/2009
WO	9105281	A1	4/1991
WO	9326070	A1	12/1993
WO	9520175	A1	7/1995
WO	9636896	A1	11/1996
WO	9712268	A1	4/1997
WO	9744605	A1	11/1997
WO	9825416	A1	6/1998
WO	9927404	A1	6/1999
WO	0005611	A2	2/2000
WO	0127660	A2	4/2001
WO	0242818	A1	5/2002
WO	03009527	A2	1/2003
WO	2004052066	A1	6/2004
WO	2007050515	A1	5/2007
WO	2007079074	A2	7/2007
WO	2007149215	A2	12/2007
WO	2008063054	A2	5/2008
WO	2008113054	A2	9/2008
WO	2008157248	A1	12/2008
WO	2009120280	A2	10/2009
WO	2010080745	A1	7/2010
WO	2011011510	A2	1/2011

OTHER PUBLICATIONS

Non-Final Office Action for U.S. Appl. No. 12/952,912 mailed Dec. 28, 2012, 9 pages.
Non-Final Office Action for U.S. Appl. No. 12/953,118 mailed Jan. 7, 2013, 9 pages.
Non-Final Office Action for U.S. Appl. No. 12/707,889 mailed Jan. 2, 2013, 7 pages.
Non-Final Office Action for U.S. Appl. No. 12/953,536 mailed Jan. 2, 2013, 20 pages.
Final Office Action for U.S. Appl. No. 12/394,114 mailed Oct. 25, 2012, 8 pages.
Non-final Office Action for U.S. Appl. No. 12/732,487 mailed Sep. 19, 2012, 22 pages.
Non-final Office Action for U.S. Appl. No. 12/818,986 mailed Feb. 3, 2012, 12 pages.
Final Office Action for U.S. Appl. No. 12/818,986 mailed Oct. 18, 2012, 13 pages.
Non-final Office Action for U.S. Appl. No. 12/952,960 mailed Oct. 4, 2012, 11 pages.
Non-final Office Action for U.S. Appl. No. 12/953,134 mailed Sep. 25, 2012, 8 pages.
Non-final Office Action for U.S. Appl. No. 12/915,682 mailed Oct. 24, 2012, 8 pages.
Non-final Office Action for U.S. Appl. No. 12/946,139 mailed Jul. 26, 2012, 12 pages.
European Search Report for patent application 10790017.7 mailed Nov. 8, 2012, 7 pages.
Final Office Action for U.S. Appl. No. 12/946,139 mailed Feb. 15, 2013, 17 pages.
Non-final Office Action for U.S. Appl. No. 12/751,884 mailed Feb. 15, 2013, 5 pages.
Non-final Office Action for U.S. Appl. No. 12/394,114 mailed Feb. 27, 2013, 8 pages.
Non-final Office Action for U.S. Appl. No. 12/819,065 mailed Mar. 4, 2013, 7 pages.
Final Office Action for U.S. Appl. No. 12/952,960 mailed Mar. 7, 2013, 13 pages.
Notice of Allowance for U.S. Appl. No. 12/732,487 mailed Mar. 19, 2013, 11 pages.
Non-final Office Action for U.S. Appl. No. 12/953,134 mailed Mar. 21, 2013, 9 pages.
Final Office Action for U.S. Appl. No. 12/641,617 mailed May 10, 2013, 21 pages.
Annex to Form PCT/ISA/2006, Communication Relating to the Results of the Partial International Search, for PCT/US2009/004549 mailed Feb. 10, 2010, 2 pages.
Annex to Form PCT/ISA/206, Communication Relating to the Results of the Partial International Search, for PCT/ US2009/004548 mailed Jan. 19, 2010, 2 pages.
Corning Cable Systems, "Corning Cable Systems Products for BellSouth High Density Shelves," Jun. 2000, 2 pages.
Corning Cable Systems, "Corning Cable Systems Quick Reference Guide for Verizon FTTP FDH Products," Jun. 2005, 4 pages.
Conner, M. "Passive Optical Design for RFOG and Beyond," Braodband Properties, Apr. 2009, pp. 78-81.
Corning Evolant, "Eclipse Hardware Family," Nov. 2009, 1 page.
Corning Evolant, "Enhanced Management Frame," Dec. 2009, 1 page.
Corning Evolant, "Enhanced Management Frame (EMF)," Specification Sheet, Nov. 2009, 24 pages.
Corning Cable Systems, "Evolant Solutions for Evolving Networks: Fiber Optic Hardware," Oct. 2002, 2 pages.
Corning Cable Systems, "Fiber Optic Hardware with Factory-Installed Pigtails: Features and Benefits," Nov. 2010, 12 pages.
Corning Cable Systems, "FiberManager System 1- and 3-Position Compact Shelves," Jan. 2003, 4 pages.
Corning Cable Systems, "FiberManager System Frame and Components," Jan. 2003, 12 pages.
Corning Cable Systems, "High Density Frame," Jul. 2001, 2 pages.
Corning Cable Systems, "High Density Frame (HDF) Connector-Splice Shelves and Housings," May 2003, 4 pages.
International Search Report for PCT/US10/35529 mailed Jul. 23, 2010, 2 pages.
International Search Report for PCT/US10/35563 mailed Jul. 23, 2012, 1 page.
International Search Report for PCT1US20081002514 mailed Aug. 8, 2008, 2 pages.
International Search Report for PCT1US20081010317 mailed Mar. 4, 2008, 2 pages.
International Search Report for PCT/US2009/001692 mailed Nov. 24, 2009, 5 pages.
International Search Report for PCT/US2010/024888 mailed Jun. 23, 2010, 5 pages.
International Search Report for PCT/US2010/027402 mailed Jun. 16, 2010, 2 pages.

(56) **References Cited**

OTHER PUBLICATIONS

Corning Cable Systems, "MTX Frames and Accessories," Feb. 2006, 4 pages.
Panduit, "Lock-in LC Duplex Clip," Accessed Mar. 22, 2012, 1 page.
International Search Report for PCT/US06/49351 mailed Apr. 25, 2008, 1 page.
International Search Report for PCT/US09/57069 mailed Mar. 24, 2010, 2 pages.
International Search Report for PCT/US2009/057244 mailed Nov. 9, 2009 3 pages.
International Search Report for PCTUS2009004548 mailed Mar. 19, 2010, 5 pages.
International Search Report for PCTUS2009004549 mailed Apr. 20, 2010, 6 pages.
Siecor, "Single Shelf HDF with Slack Storage and Heat Shield (HH1-CSH-1238-1V-BS)," Jan. 1998, 12 pages.
Corning Cable Systems, "Mass Termination Xchange (MTX) Frame System Equipment Office Planning and Application Guide," SRP003-664, Issue 1, Mar. 2005, 57 pages.
Corning Cable Systems, "Mass Termination Xchange (MTX) Equipment Patch Cord Interbay Vertical Channel," SRP003-684, Issue 1, Mar. 2005, 8 pages.
Corning Cable Systems, "High Density Frame (HDF) Installation," SRP003-355, Issue 4, Sep. 2002, 18 pages.
Written Opinion for PCT/US2010/023901 mailed Aug. 25, 2011, 8 pages.
Advisory Action for U.S. Appl. No. 12/221,117 mailed Aug. 24, 2011, 3 pages.
Examiner's Answer to Appeal Brief for U.S. Appl. No. 12/221,117 mailed Mar. 29, 2012, 16 pages.
Final Office Action for U.S. Appl. No. 12/221,117 mailed Feb. 19, 2010, 7 pages.
Final Office Action for U.S. Appl. No. 12/221,117 mailed Jun. 10, 2011, 8 pages.
Non-final Office Action for U.S. Appl. No. 12/221,117 mailed Jul. 14, 2010, 7 pages.
Non-final Office Action for U.S. Appl. No. 12/221,117 mailed Jun. 9, 2009, 5 pages.
Non-final Office Action for U.S. Appl. No. 12/221,117 mailed Dec. 21, 2010, 7 pages.
Advisory Action for U.S. Appl. No. 12/394,483 mailed Feb. 16, 2012, 3 pages.
Final Office Action for U.S. Appl. No. 12/394,483 mailed Dec. 6, 2011, 14 pages.
Non-final Office Action for U.S. Appl. No. 12/394,483 mailed Jun. 17, 2011, 11 pages.
Advisory Action for U.S. Appl. No. 12/950,234 mailed Dec. 21, 2011, 3 pages.
Non-final Office Action for U.S. Appl. No. 12/950,234 mailed Jun. 17, 2011, 7 pages.
Non-final Office Action for U.S. Appl. No. 12/950,234 mailed Mar. 12, 2012, 10 pages.
Final Office Action for U.S. Appl. No. 12/950,234 mailed Oct. 14, 2011, 10 pages.
Advisory Action mailed May 12, 2011, for U.S. Appl. No. 12/323,423, 3 pages.
Final Rejection mailed Mar. 3, 2011, for U.S. Appl. No. 12/323,423, 17 pages.
Non-Final Rejection mailed Aug. 5, 2011, for U.S. Appl. No. 12/323,423, 13 pages.
Non-Final Rejection mailed Sep. 7, 2010, for U.S. Appl. No. 12/323,423, 18 pages.
Notice of Allowance for U.S. Appl. No. 12/323,423 mailed Jan. 24, 2012, 8 pages.
Examiner's Answer mailed Mar. 4, 2011, for U.S. Appl. No. 12/323,415, 11 pages.
Final Rejection mailed Jun. 25, 2010, for U.S. Appl. No. 12/323,415, 10 pages.
Non-Final Rejection mailed Aug. 5, 2011, for U.S. Appl. No. 12/323,415, 41 pages.
Non-final Office Action for U.S. Appl. No. 12/323,415 mailed Apr. 23, 2012, 11 pages.
Non-Final Rejection mailed Dec. 10, 2009, for U.S. Appl. No. 12/323,415, 7 pages.
Examiner's Answer to Appeal Brief for U.S. Appl. No. 11/320,062 mailed Dec. 8, 2011, 8 pages.
Final Office Action for U.S. Appl. No. 11/320,062 mailed Mar. 8, 2011, 8 pages.
Non-final Office Action for U.S. Appl. No. 11/320,062 mailed Jan. 15, 2010, 11 pages.
Non-final Office Action for U.S. Appl. No. 12/320,062 mailed Sep. 30, 2010, 7 pages.
Final Office Action for U.S. Appl. No. 11/439,086 mailed Feb. 4, 2010, 14 pages.
Non-final Office Action for U.S. Appl. No. 11/439,086 mailed May 3, 2010, 11 pages.
Non-final Office Action for U.S. Appl. No. 11/439,086 mailed Sep. 21, 2009, 10 pages.
Final Office Action for U.S. Appl. No. 12/079,481 mailed Mar. 18, 2010, 10 pages.
Non-final Office Action for U.S. Appl. No. 12/079,481 mailed Dec. 26, 2008, 9 pages.
Non-final Office Action for U.S. Appl. No. 12/079,481 mailed Sep. 16, 2009, 10 pages.
Notice of Allowance for U.S. Appl. No. 12/079,481 mailed Jun. 3, 2010, 6 pages.
Notice of Allowance for U.S. Appl. No. 12/079,481 mailed Oct. 4, 2010, 4 pages.
Final Office Action for U.S. Appl. No. 12/394,114 mailed Dec. 22, 2011, 8 pages.
Non-final Office Action for U.S. Appl. No. 12/394,114 mailed Mar. 16, 2012, 8 pages.
Non-final Office Action for U.S. Appl. No. 12/394,114 mailed Sep. 1, 2011, 7 pages.
Non-final Office Action for U.S. Appl. No. 12/323,373 mailed May 3, 2012, 7 pages.
Non-final Office Action for U.S. Appl. No. 11/809,474 mailed Apr. 8, 2008, 13 pages.
Non-final Office Action for U.S. Appl. No. 11/809,474 mailed Nov. 13, 2008, 10 pages.
Notice of Allowance for U.S. Appl. No. 11/809,474 mailed Jul. 6, 2009, 6 pages.
Final Office Action for U.S. Appl. No. 11/320,031 mailed Mar. 8, 2011, 8 pages.
Non-final Office Action for U.S. Appl. No. 11/320,031 mailed Jan. 5, 2010, 16 pages.
Non-final Office Action for U.S. Appl. No. 11/320,031 mailed Sep. 30, 2010, 7 pages.
Notice of Allowance for U.S. Appl. No. 11/320,031 mailed Nov. 15, 2011, 7 pages.
Non-final Office Action for U.S. Appl. No. 12/157,622 mailed Mar. 31, 2009, 9 pages.
Non-final Office Action for U.S. Appl. No. 12/157,622 mailed Oct. 15, 2009, 9 pages.
Notice of Allowance for U.S. Appl. No. 12/157,622 mailed Apr. 22, 2010, 4 pages.
Non-final Office Action for U.S. Appl. No. 12/323,395 mailed Dec. 8, 2011, 7 pages.
Non-final Office Action for U.S. Appl. No. 12/415,454 mailed Mar. 2, 2012, 5 pages.
Non-final Office Action for U.S. Appl. No. 12/415,454 mailed Sep. 6, 2011, 7 pages.
Notice of Allowance for U.S. Appl. No. 12/415,454 mailed Jan. 13, 2012, 5 pages.
Non-final Office Action for U.S. Appl. No. 12/576,769 mailed Feb. 2, 2012, 23 pages.
Notice of Allowance for U.S. Appl. No. 12/415,454 mailed Jun. 19, 2012, 5 pages.
International Search Report for PCT/US2009/066779 mailed Aug. 27, 2010, 3 pages.
"MPO Fiber Optic Rack Panels now available from L-com Connectivity Products," article dated Jun. 4, 2007, 16 pages, http://www.l-com.com/content/Article.aspx?Type=P&ID=438.

(56) **References Cited**

OTHER PUBLICATIONS

"19 Rack Panel with 16 MPO Fiber Optic Couplers—1U high," product page, accessed Oct. 23, 2012, 2 pages, http://www.l-com.com/item.aspx?id=9767#.UIbgG8XXay5.
"Drawing for L-com 1U Panel with 16 MTP couplers," May 15, 2007, 1 page, http://www.l-com.com/multimedia/eng_drawings/PR17516MTP.pdf.
"RapidNet Fibre MTP VHD Cassette," Brochure, Date Unknown, 1 page, http://www.hellermanntyton.se/documents/5000/576_fiber_1U.pdf.
"MPO for Gigabit Ethernet/FAS-NET MTP Solution," Brochure, Date Unknown, 11 pages, http://www.infinique.com/upload/13182286190.pdf.
"Hubbell OptiChannel High Density 144 Port 1U Fiber Enclosure," Brochure, Date Unknown, 2 pages, http://www.hubbell-premise.com/literature/PLDF010.pdf.
Non-final Office Action for U.S. Appl. No. 12/819,034 mailed May 11, 2012, 7 pages.
Non-final Office Action for U.S. Appl. No. 12/819,081 mailed Aug. 21, 2012, 12 pages.
Notice of Allowance of for U.S. Appl. No. 12/819,034 mailed Sep. 11, 2012, 7 pages.
Notice of Allowance for U.S. Appl. No. 12/417,325 mailed Aug. 22, 2012, 7 pages.
Notice of Panel Decision for Pre-Appeal Brief for U.S. Appl. No. 12/417,325 mailed Aug. 8, 2012, 2 pages.
Advisory Action for U.S. Appl. No. 12/417,325 mailed Jun. 29, 2012, 3 pages.
Advisory Action for U.S. Appl. No. 12/417,325 mailed Jun. 12, 2012, 3 pages.
Final Office Action for U.S. Appl. No. 12/417,325 mailed Apr. 16, 2012, 6 pages.
Final Office Action for U.S. Appl. No. 12/417,325 mailed Feb. 7, 2012, 7 pages.
Non-final Office Action for U.S. Appl. No. 12/417,325 mailed Jun. 15, 2011, 6 pages.
Notice of Allowance for U.S. Appl. No. 12/487,929 mailed Sep. 12, 2012, 4 pages.
Notice of Allowance for U.S. Appl. No. 12/487,929 mailed Jun. 13, 2012, 8 pages.
Advisory Action for U.S. Appl. No. 12/487,929 mailed Apr. 17, 2012, 3 pages.
Final Office Action for U.S. Appl. No. 12/487,929 mailed Feb. 14, 2012, 6 pages.
Final Office Action for U.S. Appl. No. 12/487,929 mailed Dec. 5, 2011, 7 pages.
Non-final Office Action for U.S. Appl. No. 12/487,929 mailed May 23, 2011, 7 pages.
Notice of Allowance for U.S. Appl. No. 12/415,253 mailed Mar. 11, 2011, 7 pages.
Non-final Office Action for U.S. Appl. No. 12/415,253 mailed Jul. 12, 2010, 11 pages.
Final Office Action for U.S. Appl. No. 12/415,253 mailed Apr. 16, 2010, 9 pages.
Non-final Office Action for U.S. Appl. No. 12/415,253 mailed Sep. 30, 2009, 8 pages.
Non-final Office Action for U.S. Appl. No. 12/641,617 mailed Oct. 5, 2012, 21 pages.
Final Office Action for U.S. Appl. No. 12/630,938 mailed Jun. 1, 2012, 18 pages.
Non-final Office Action for U.S. Appl. No. 12/630,938 mailed Dec. 19, 2011, 15 pages.
Non-final Office Action for U.S. Appl. No. 12/751,884 mailed Jul. 2, 2012, 9 pages.
Non-final Office Action for U.S. Appl. No. 12/871,052 mailed Aug. 13, 2012, 8 pages.
Non-final Office Action for U.S. Appl. No. 12/576,806 mailed Dec. 13, 2011, 6 pages.
Notice of Allowance for U.S. Appl. No. 12/576,806 mailed Apr. 18, 2012, 5 pages.
Unknown, Author, "QuickNet SFQ Series MTP Fiber Optic Cassettes," Panduit Specification Sheet, Jan. 2009, 2 pages.
Unknown Author, "Cellular Specialties introduces the first simulated in-building location-based tracking solution," smart-grid.tmenet.com/news, Sep. 14, 2009, 2 pages.
Unknown Author, "CDMA Co-Pilot Transmitter," Cellular Specialties, Inc., Aug. 2009, 2 pages.
International Search Report for PCT/US2010/038986 mailed Aug. 18, 2010, 1 page.
International Search Report for PCT/US2010/023901 mailed Jun. 11, 2010, 3 pages.
Non-final Office Action for U.S. Appl. No. 13/302,067 mailed Jun. 7, 2013, 13 pages.
Notice of Allowance for U.S. Appl. No. 12/751,884 mailed Jul. 17, 2013, 8 pages.
Non-final Office Action for U.S. Appl. No. 12/940,585 mailed Aug. 16, 2013, 14 pages.
Final Office Action for U.S. Appl. No. 12/953,134 mailed Aug. 23, 2013, 11 pages.
Ex parte Quayle Action for U.S. Appl. No. 12/953,164 mailed Aug. 16, 2013, 5 pages.
Non-final Office Action for U.S. Appl. No. 12/732,487 mailed Jul. 17, 2013, 22 pages.
Non-final Office Action and Interview Summary for U.S. Appl. No. 12/707,889 mailed Aug. 8, 2013, 15 pages.
Advisory Action for U.S. Appl. No. 12/953,039 mailed Jul. 12, 2013, 3 pages.
Advisory Action for U.S. Appl. No. 12/953,118 mailed Jul. 12, 2013, 3 pages.
Advisory Action for U.S. Appl. No. 12/641,617 mailed Jul. 29, 2013, 3 pages.
Final Office Action for U.S. Appl. No. 12/952,912 mailed Aug. 30, 2013, 15 pages.
Non-final Office Action for U.S. Appl. No. 12/956,475 mailed Oct. 4, 2012, 7 pages.
Notice of Allowance for U.S. Appl. No. 12/871,052 mailed Sep. 18, 2013, 9 pages.
Non-final Office Action for U.S. Appl. No. 12/953,039 mailed Sep. 12, 2013, 8 pages.
Non-final Office Action for U.S. Appl. No. 12/946,139 mailed Oct. 2, 2013, 18 pages.
Final Office Action for U.S. Appl. No. 12/394,114 mailed Oct. 4, 2013, 10 pages.
Non-final Office Action for U.S. Appl. No. 12/818,986 mailed Oct. 4, 2013, 19 pages.
Notice of Allowance for U.S. Appl. No. 12/641,617 mailed Sep. 4, 2013, 9 pages.
Examination Report for European patent application 09789090.9-2216 mailed Aug. 29, 2011, 4 pages.
Examination Report for European patent application 09789090.9-2216 mailed Mar. 30, 2012, 6 pages.
Written Opinion of the International Searching Authority for International patent application PCT/US2009004548, mailed Apr. 5, 2011, 6 pages.
European Search Report for European patent application 09789090.9-2217 mailed Jan. 24, 2013, 5 pages.
Notice of Allowance for U.S. Appl. No. 13/090,621 mailed Apr. 22, 2013, 8 pages.
Final Office Action for U.S. Appl. No. 12/953,039 mailed May 1, 2013, 8 pages.
Final Office Action for U.S. Appl. No. 12/953,118 mailed May 3, 2013, 11 pages.
Final Office Action for U.S. Appl. No. 12/915,682 mailed Apr. 18, 2013, 9 pages.
Advisory Action for U.S. Appl. No. 12/952,960 mailed May 15, 2013, 2 pages.
Non-final Office Action for U.S. Appl. No. 12/952,960 mailed Jun. 20, 2013, 13 pages.
Non-final Office Action for U.S. Appl. No. 12/953,536 mailed Jun. 6, 2013, 21 pages.
Non-final Office Action for U.S. Appl. No. 11/820,300 mailed Apr. 25, 2012, 10 pages.

(56) **References Cited**

OTHER PUBLICATIONS

Final Office Action for U.S. Appl. No. 12/871,052 mailed Jul. 1, 2013, 12 pages.
Non-final Office Action for U.S. Appl. No. 12/940,699 mailed Jun. 26, 2013, 9 pages.
Notice of Allowance for U.S. Appl. No. 13/090,621 mailed Jun. 25, 2013, 8 pages.
International Search Report and Written Opinion for PCT/US2011/035683 mailed Sep. 8, 2011, 15 pages.
International Search Report and Written Opinion for PCT/US2010/039218 mailed Oct. 27, 2010, 13 pages.
International Search Report and Written Opinion for PCT/US2011/035684 mailed Jul. 1, 2011, 11 pages.
International Search Report and Written Opinion for PCT/US11/61754 mailed Mar. 26, 2012, 9 pages.
First Office Action for Chinese patent application 201080032453.2 issued Mar. 26, 2013, 6 pages.
Chinese Search Report for Chinese patent application 201080032453.2 mailed May 15, 2013, 2 pages.
First Office Action for Chinese patent application 201080031621.6 mailed Sep. 26, 2013, 9 pages.
Chinese Search Report for Chinese patent application 201080031621.6 mailed Sep. 13, 2013, 2 pages.
Ramdas, "Modern File Systems and Storage," Proceedings of the 2nd International Sane Conference, May 22-25, 2000, MECC, Maastricht, The Netherlands, Copyright Rodney R. Ramdas, 10 pages.
Author Unknown, "144 Fiber Patch Panel 1U," Technical Data, ADTEK Group Limited, 2009, 2 pages.
Non-final Office Action for U.S. Appl. No. 13/603,894 mailed Oct. 3, 2013, 9 pages.
Advisory Action for U.S. Appl. No. 12/394,114 mailed Jan. 2, 2014, 3 pages.
Notice of Allowance for U.S. Appl. No. 12/871,052 mailed Dec. 24, 2013, 9 pages.
Final Office Action for U.S. Appl. No. 12/953,039 mailed Dec. 27, 2013, 10 pages.
Advisory Action for U.S. Appl. No. 12/952,960 mailed Jan. 8, 2014, 3 pages.
Advisory Action for U.S. Appl. No. 12/952,912 mailed Nov. 26, 2013, 3 pages.
Examiner's Answer to the Appeal Brief for U.S. Appl. No. 12/953,118 mailed Dec. 3, 2013, 6 pages.
Non-final Office Action for U.S. Appl. No. 13/597,549 mailed Jan. 14, 2014, 9 pages.
Final Office Action for U.S. Appl. No. 12/732,487 mailed Dec. 6, 2013, 24 pages.
Final Office Action for U.S. Appl. No. 12/956,446 mailed Dec. 23, 2013, 12 pages.
Non-final Office Action for U.S. Appl. No. 12/953,536 mailed Dec. 17, 2013, 21 pages.
Non-final Office Action for U.S. Appl. No. 12/819,065 mailed Dec. 3, 2013, 8 pages.
International Search Report and Written Opinion for PCT/US2011/062353 mailed Apr. 10, 2012, 15 pages.
Non-final Office Action for U.S. Appl. No. 13/901,074 mailed Oct. 9, 2013, 6 pages.
Advisory Action for U.S. Appl. No. 12/953,134 mailed Nov. 4, 2013, 3 pages.
Final Office Action for U.S. Appl. No. 12/952,960 mailed Oct. 29, 2013, 8 pages.
Notice of Allowance for U.S. Appl. No. 13/292,130 mailed Oct. 18, 2013, 9 pages.
Non-final Office Action for U.S. Appl. No. 12/956,446 mailed Sep. 6, 2013, 10 pages.

* cited by examiner

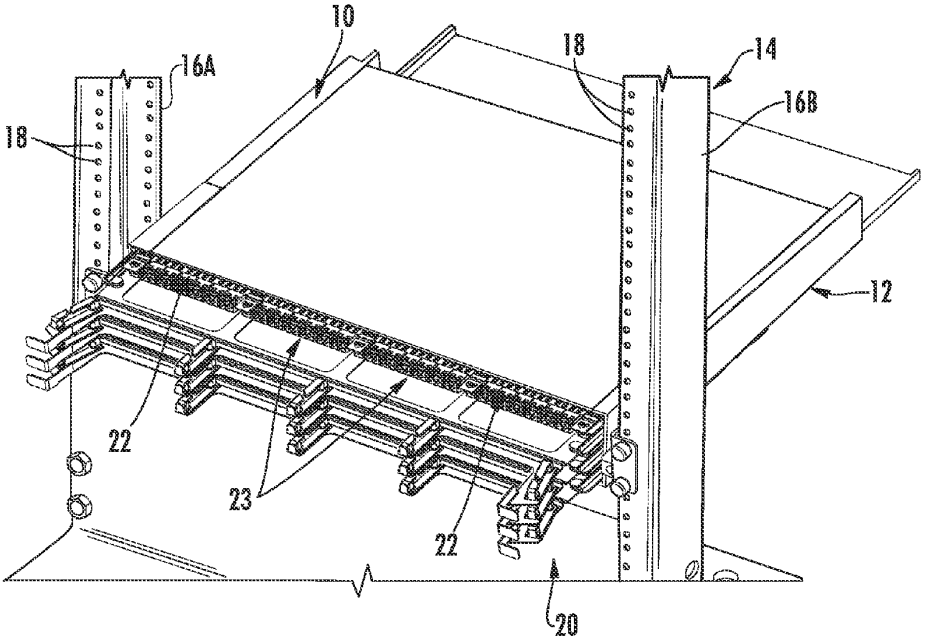

FIG. 1

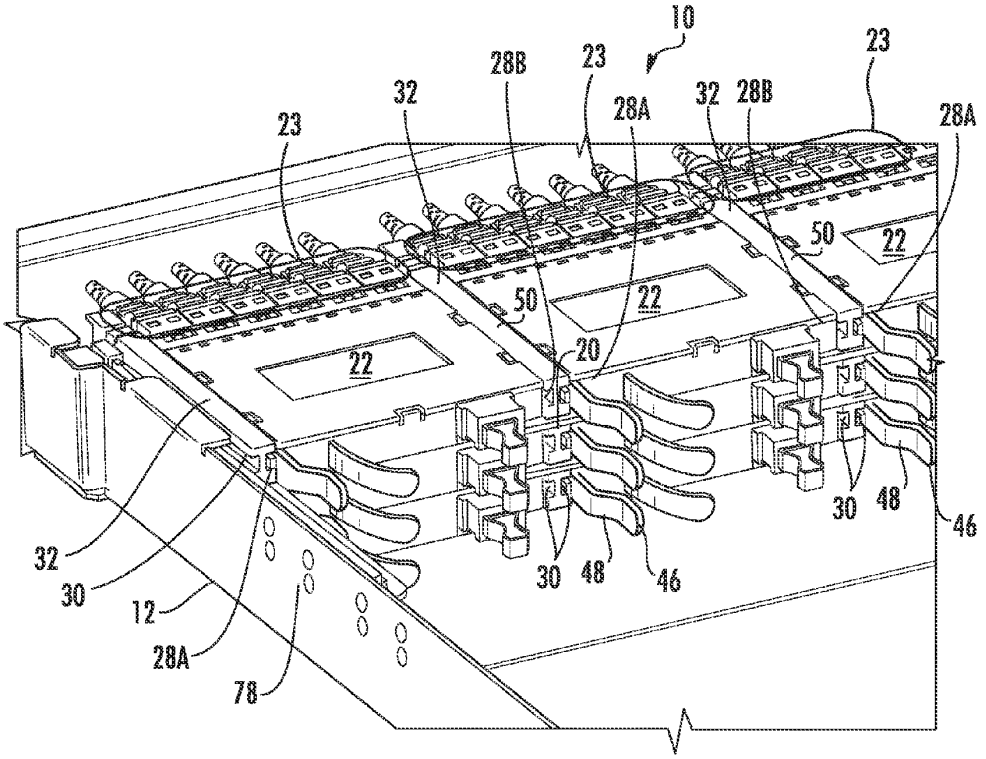
10
23
28B
23
32
28A
32
28B
23
28A
50
22
50
22
20
22
32
30
12
28A
78
30
48
46
30
48
46

FIG. 2

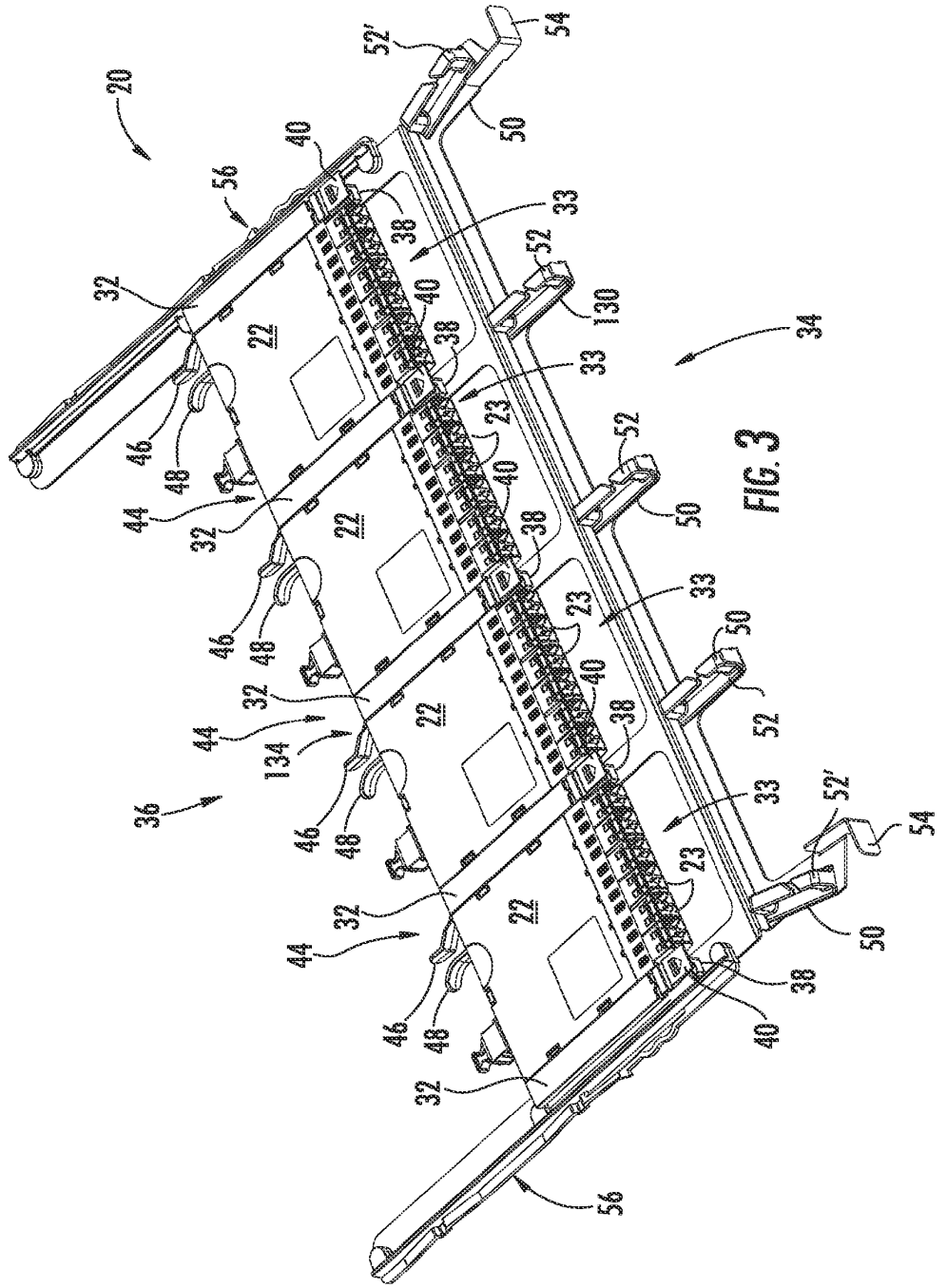

FIG. 3

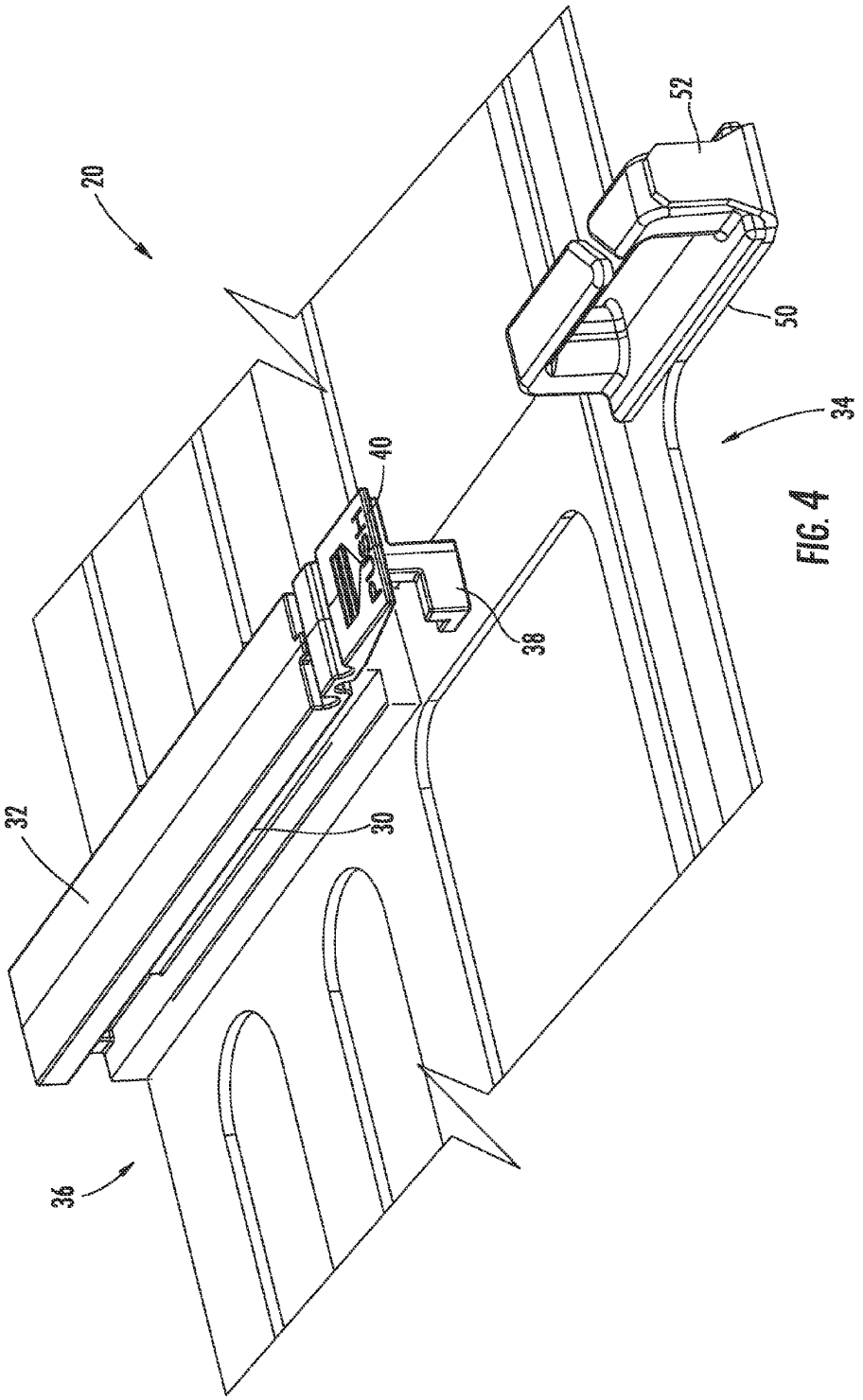

FIG. 4

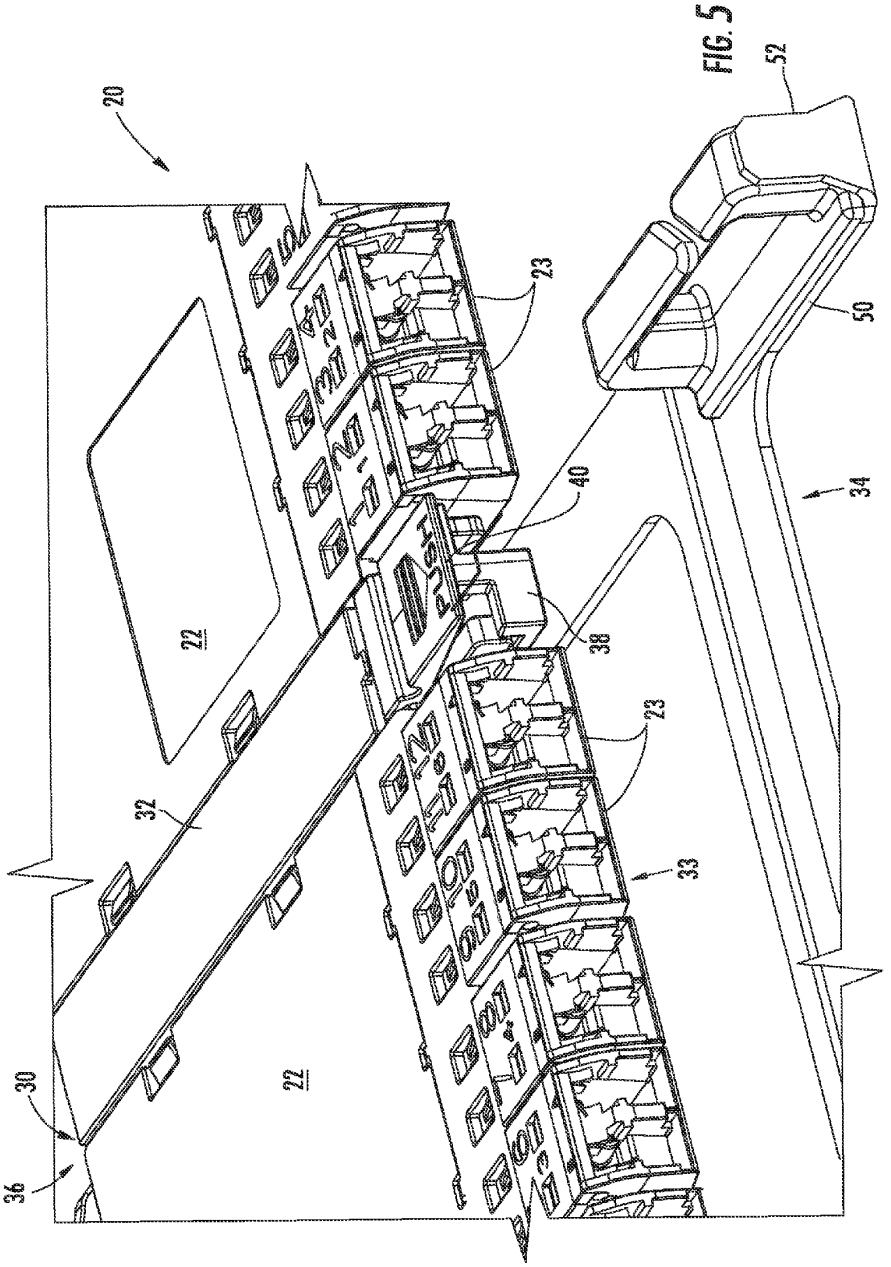

FIG. 5

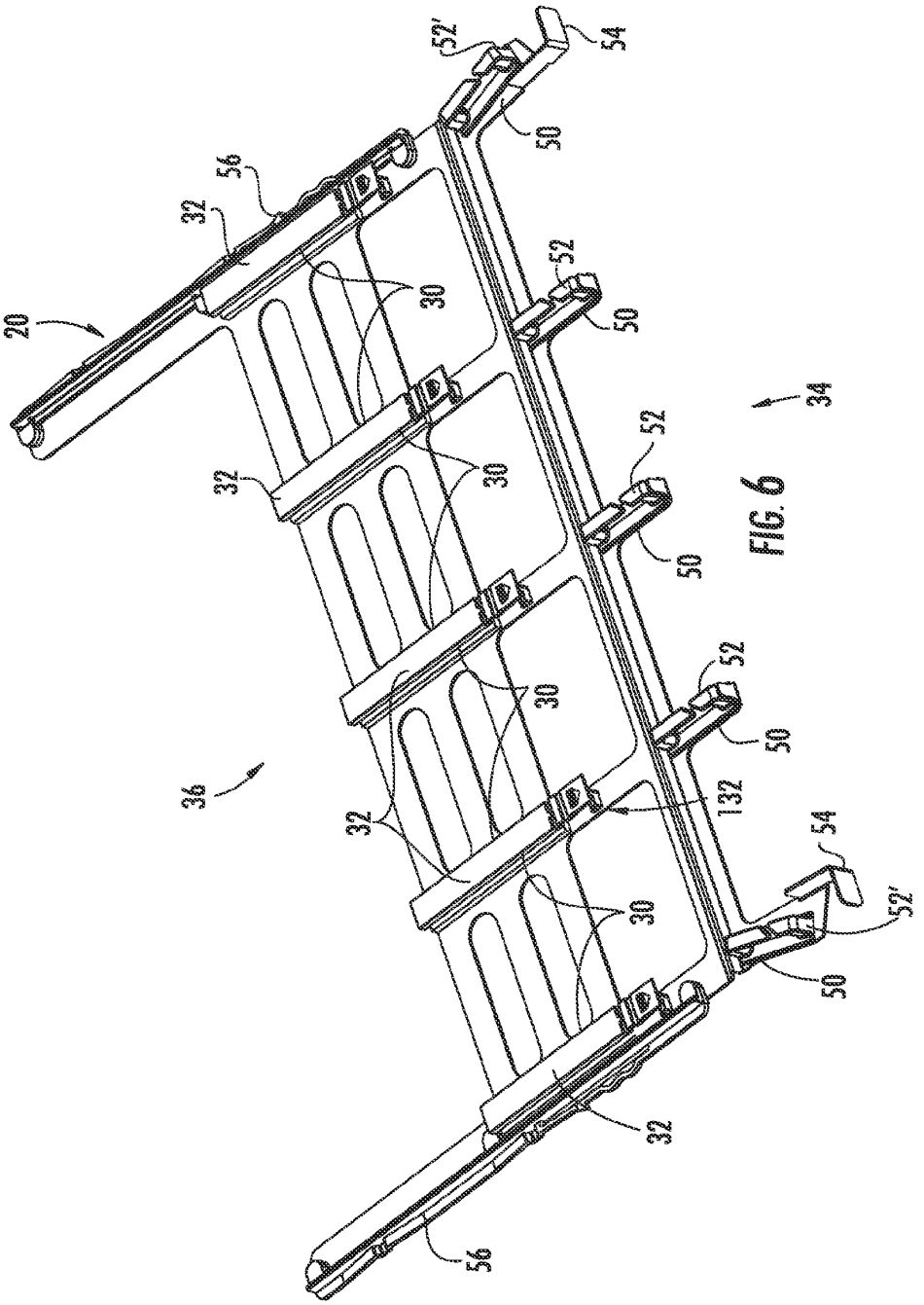

FIG. 6

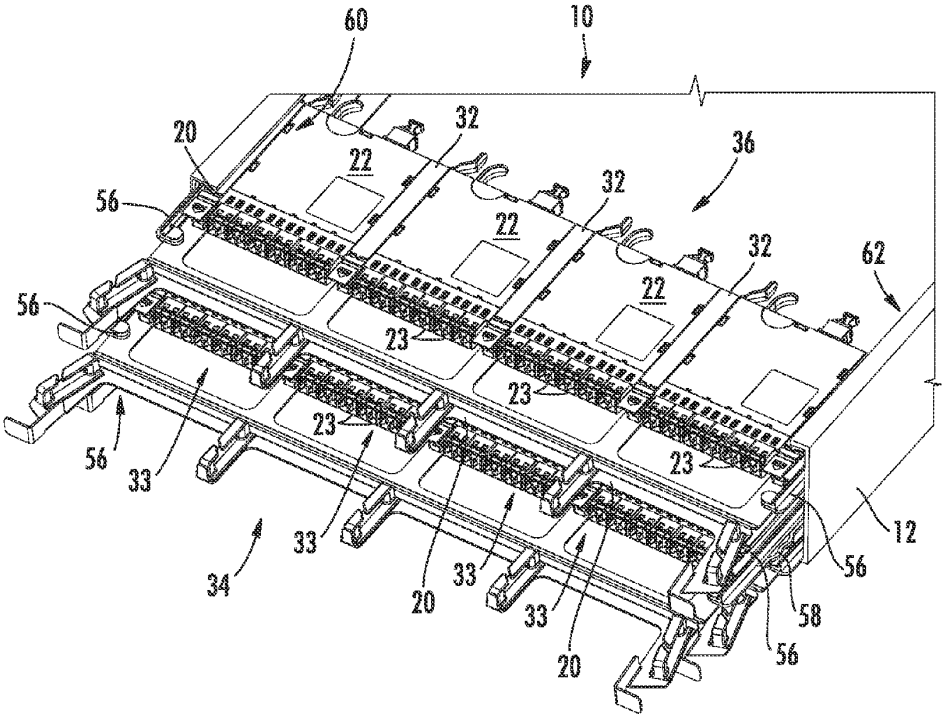

FIG. 7

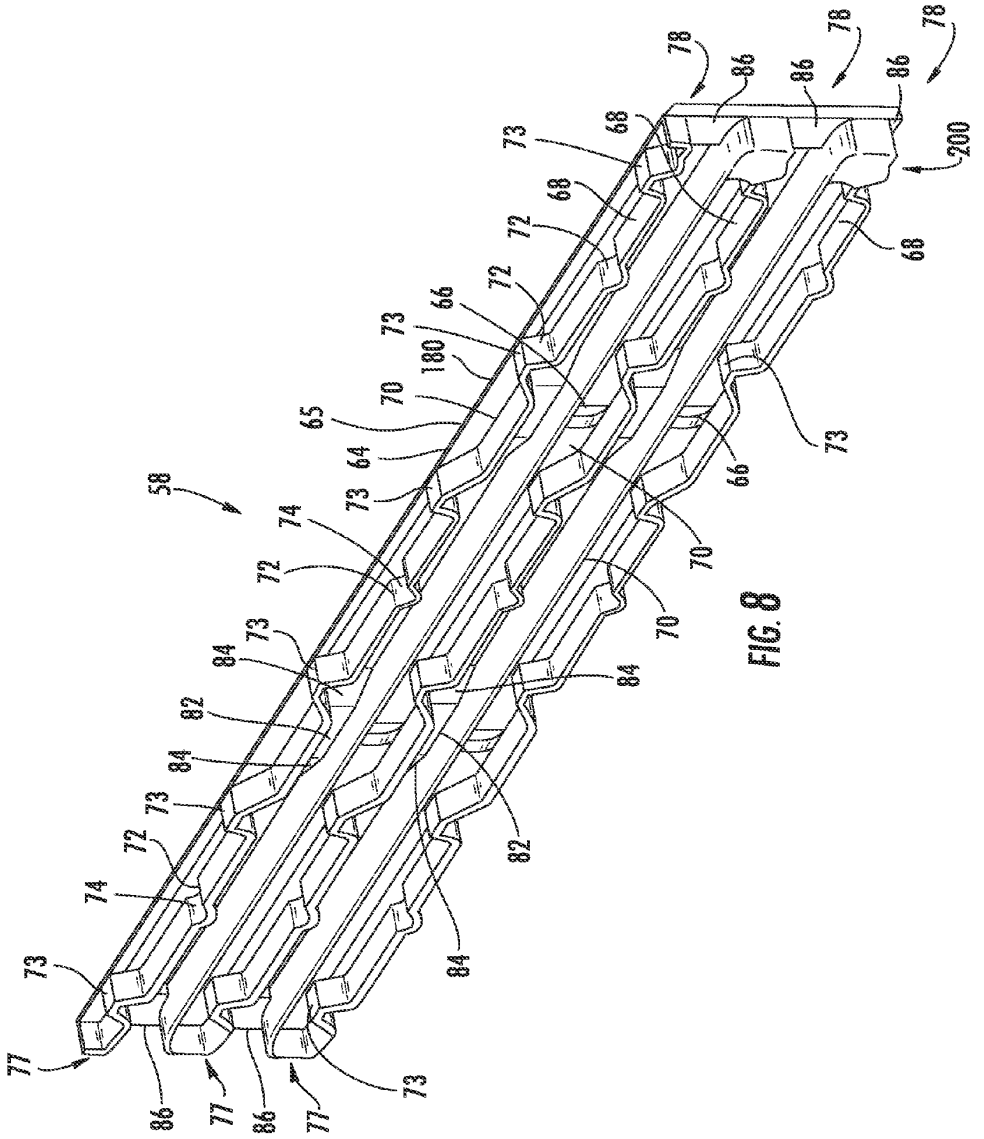

FIG. 8

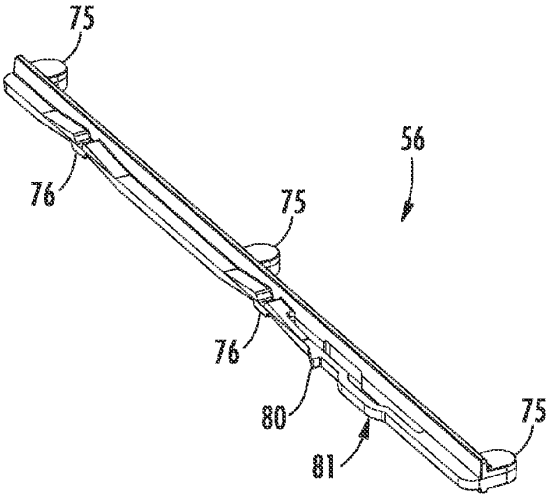

FIG. 9A

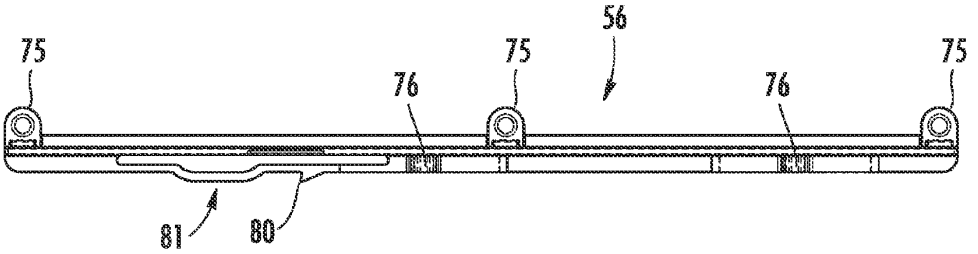

FIG. 9B

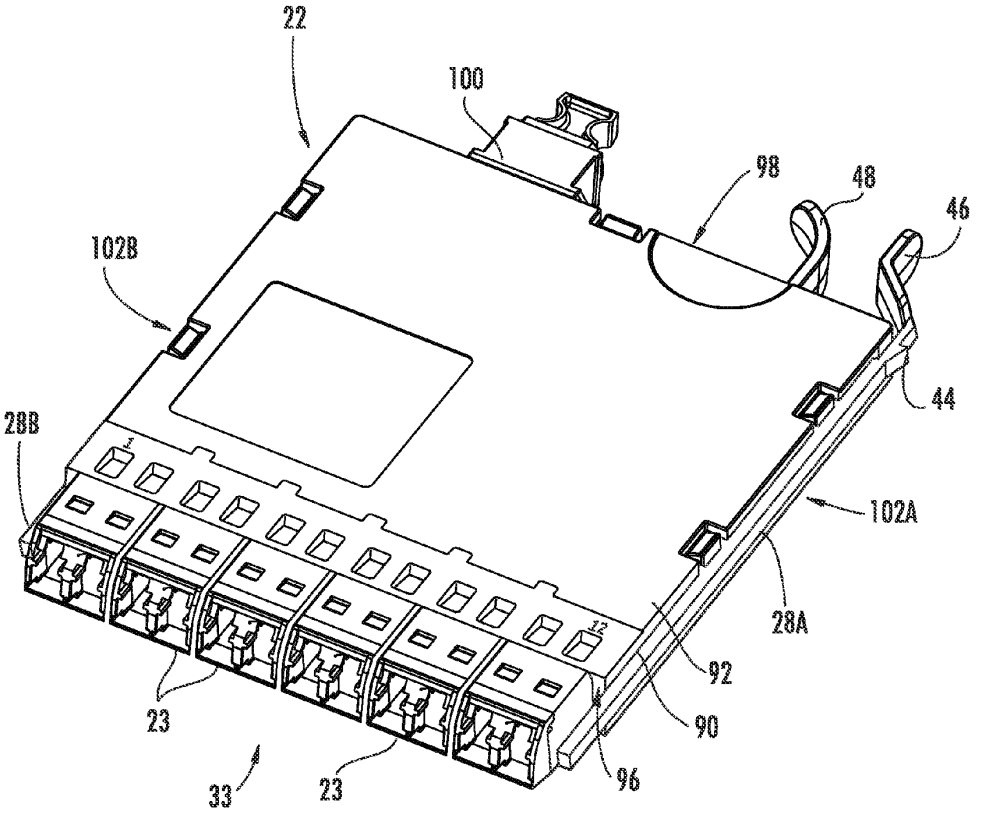

FIG. 10A

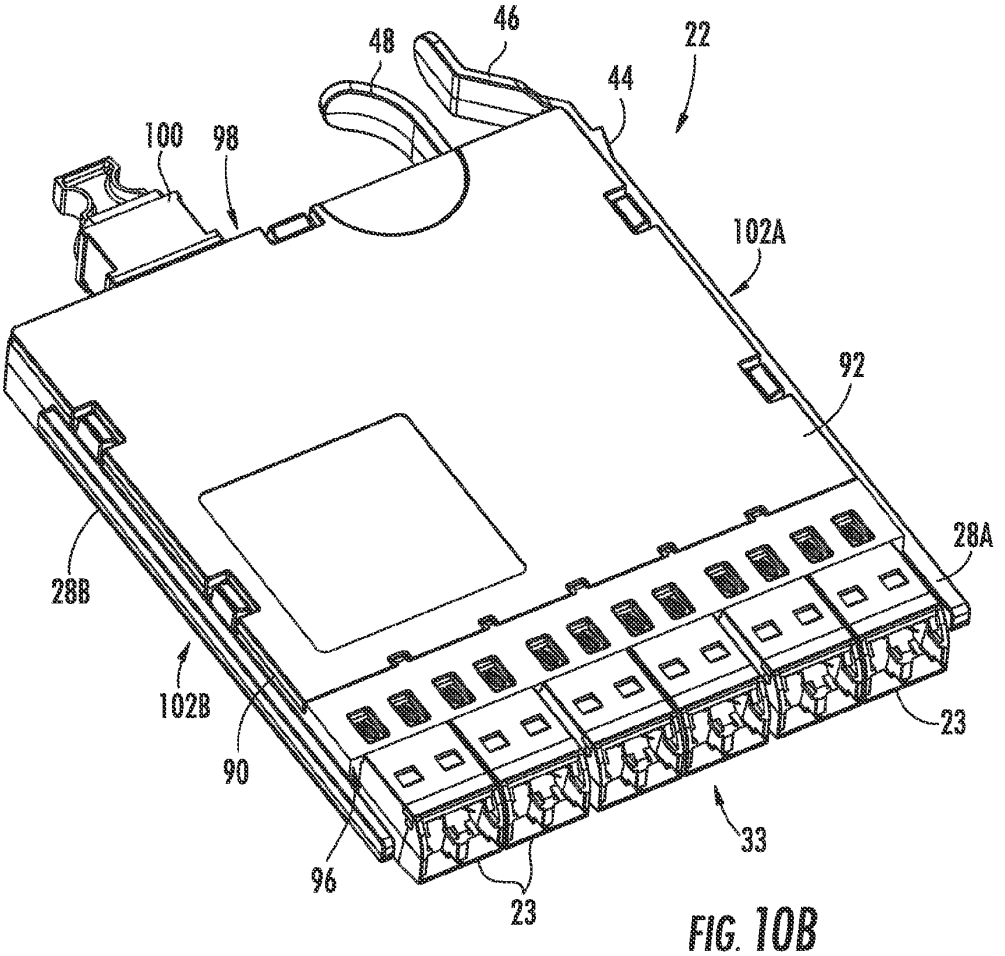

FIG. 10B

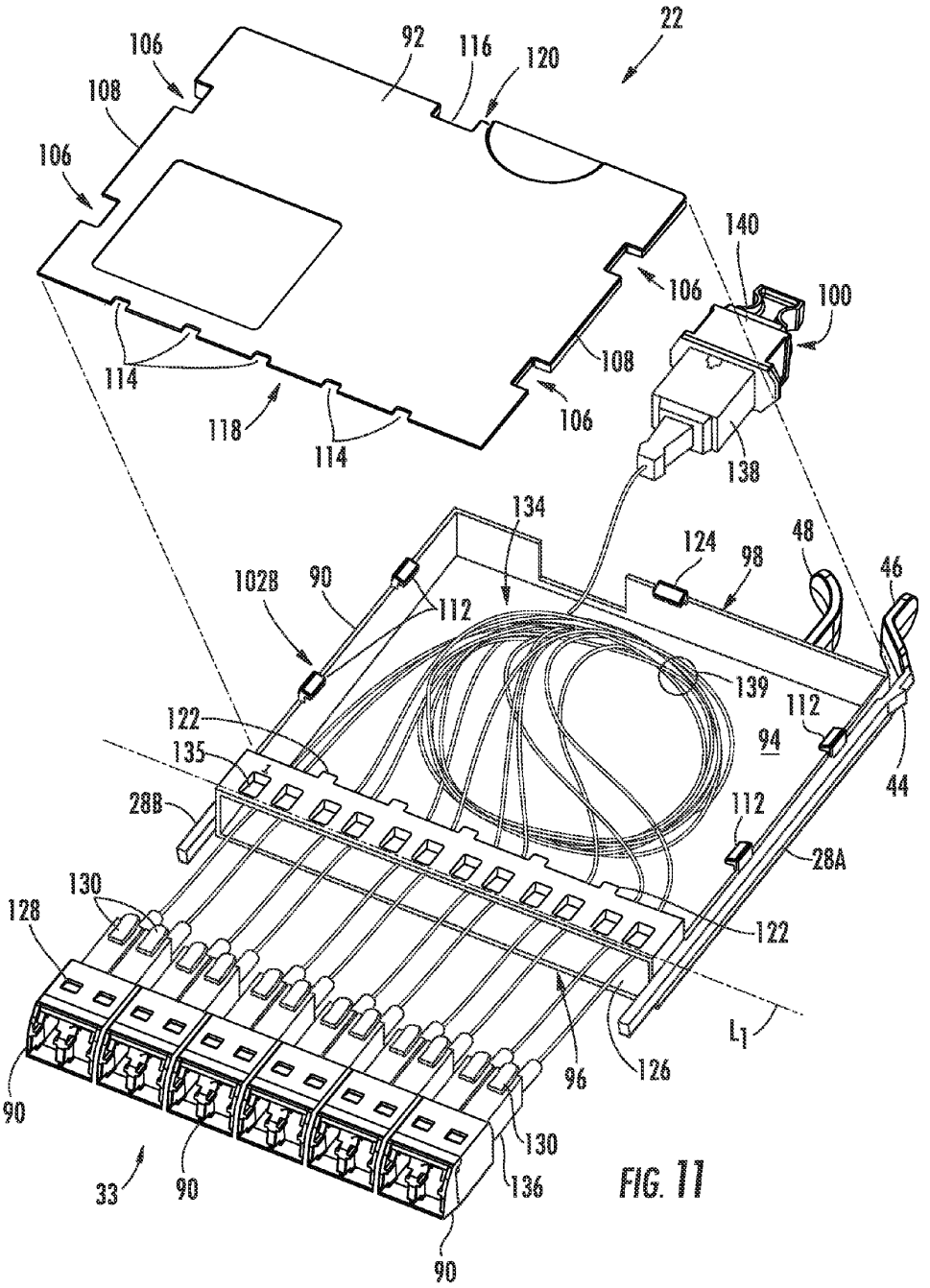
22
92
116
120
106
108
106
140
100
106
108
106
114
118
114
138
134
124
98
48
46
102B
90
112
139
112
94
44
122
135
28B
112
28A
130
128
122
L1
96
126
90
130
33
90
136
90

FIG. 11

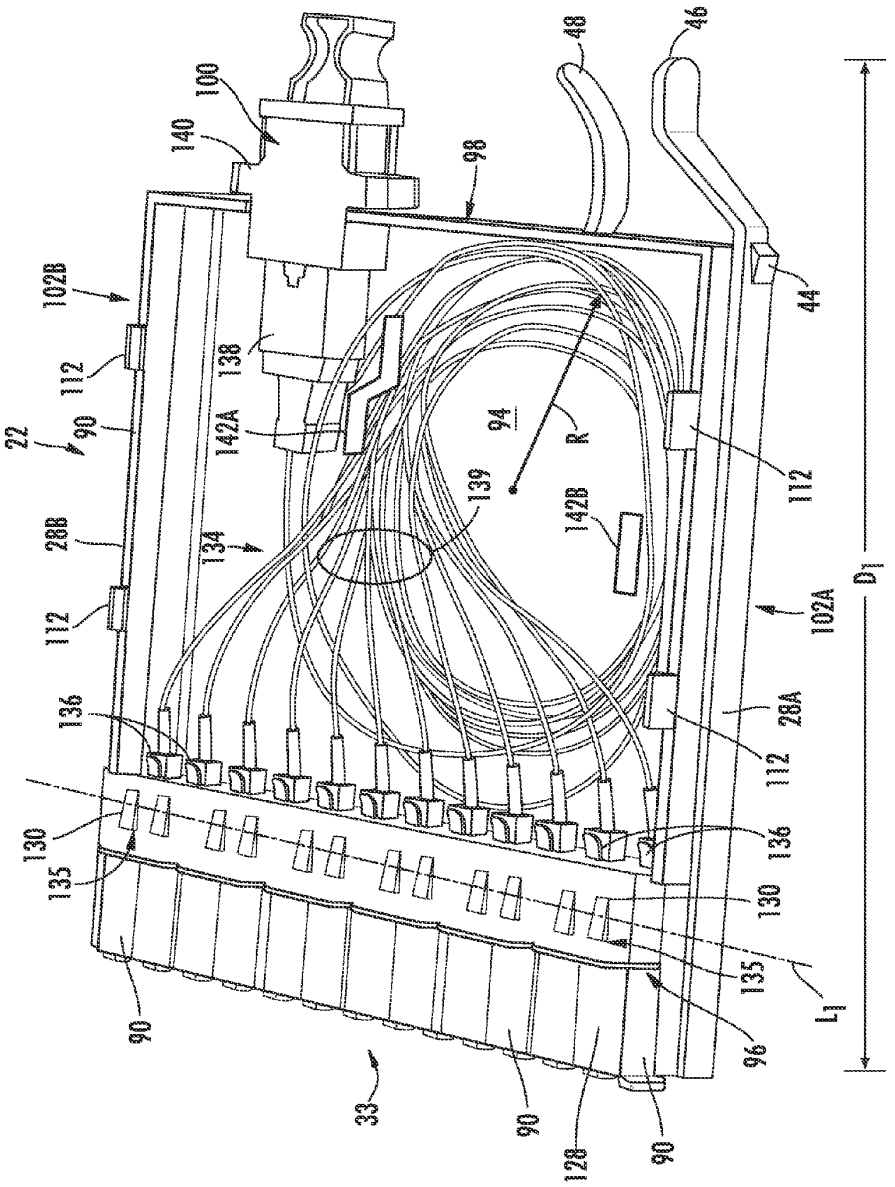
100
140
98
48
46
102B
112
22
90
138
142A
94
R
44
112
28B
134
139
142B
112
102A
D_1
136
28A
112
130
135
136
130
135
L_1
90
96
33
90
128
90

FIG. 12

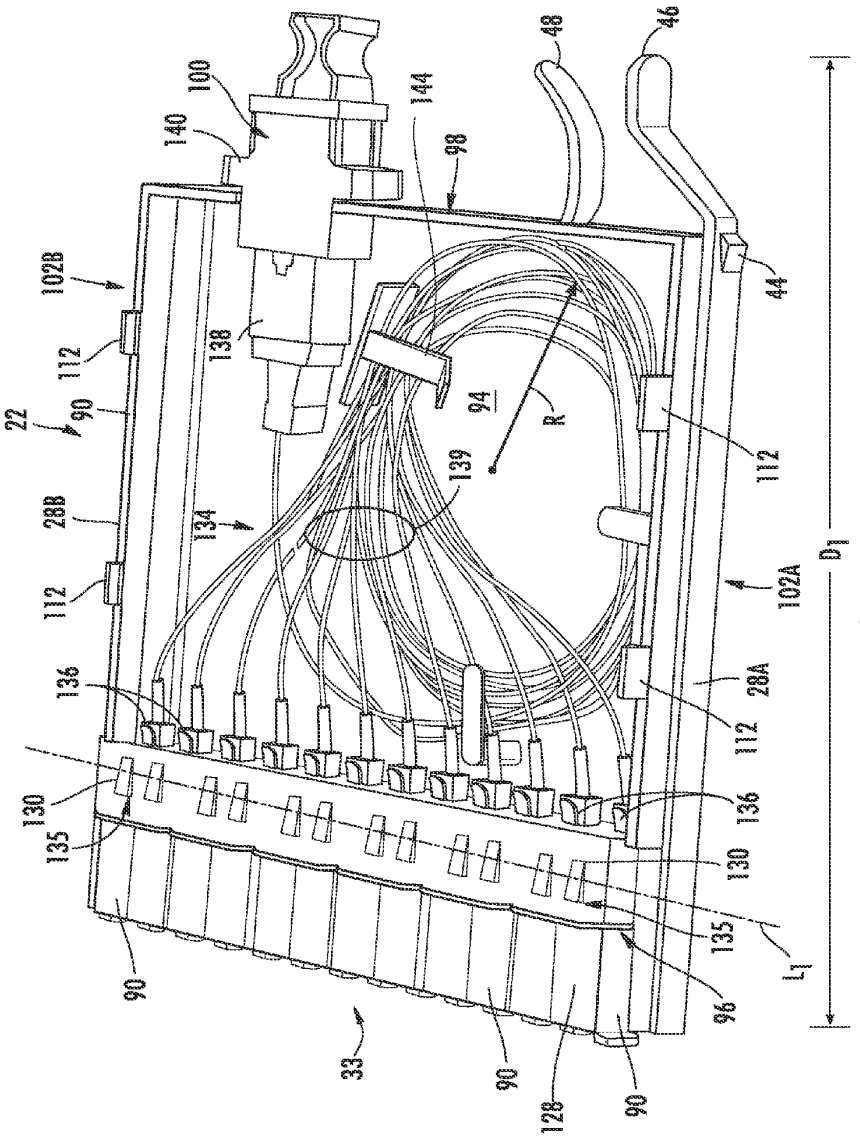
100
140
144
98
48
46
44
102B
112
138
22
90
94
R
139
28B
134
112
102A
D1
136
28A
112
130
135
136
130
135
L1
96
90
33
90
128
90

FIG. 12A

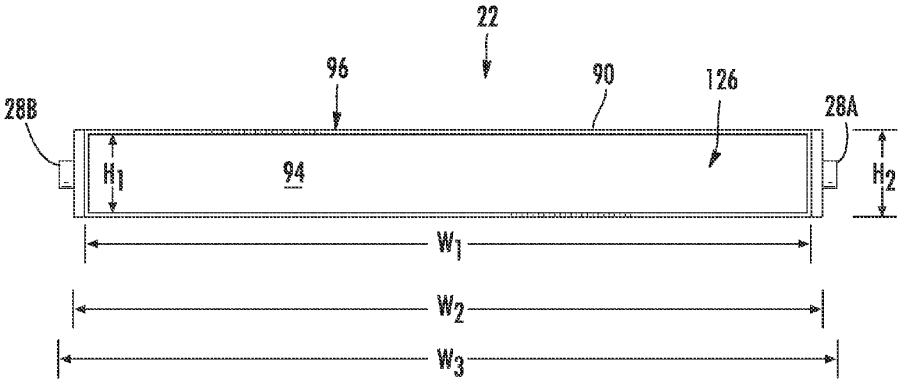

FIG. 13

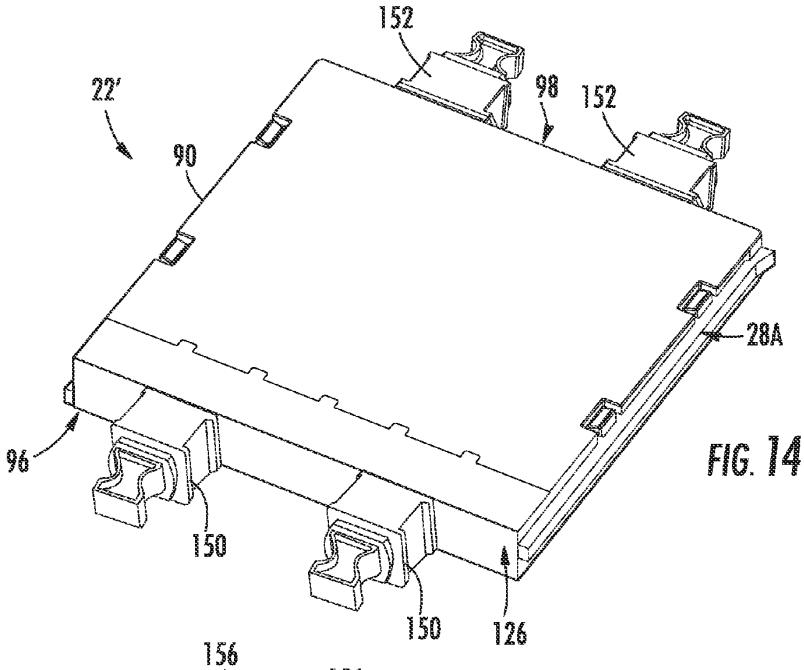
152
22'
98
152
90
28A
96
150
150
126

FIG. 14

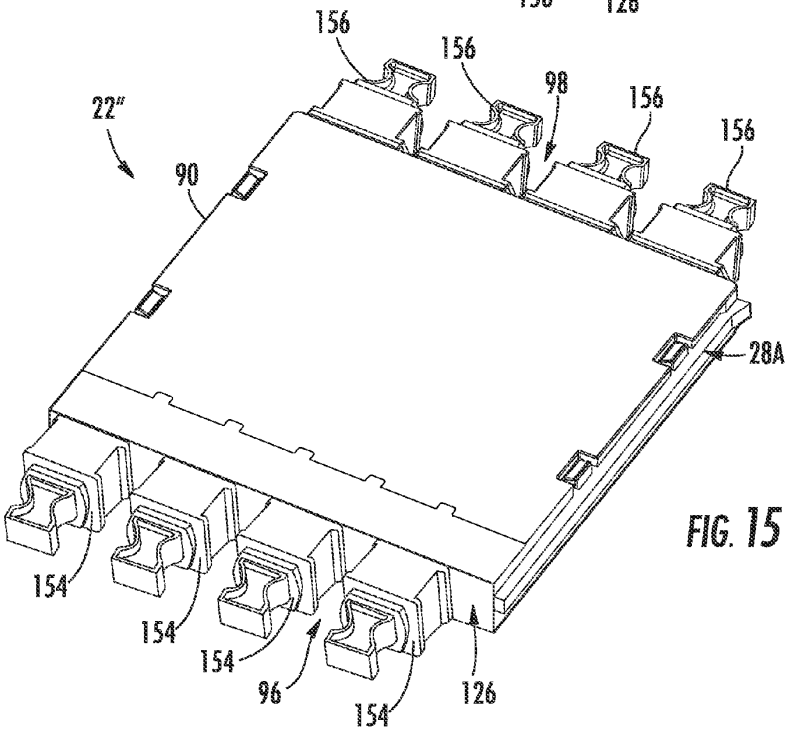
156
156
98
156
156
22"
90
28A
154
154
154
96
154
126

FIG. 15

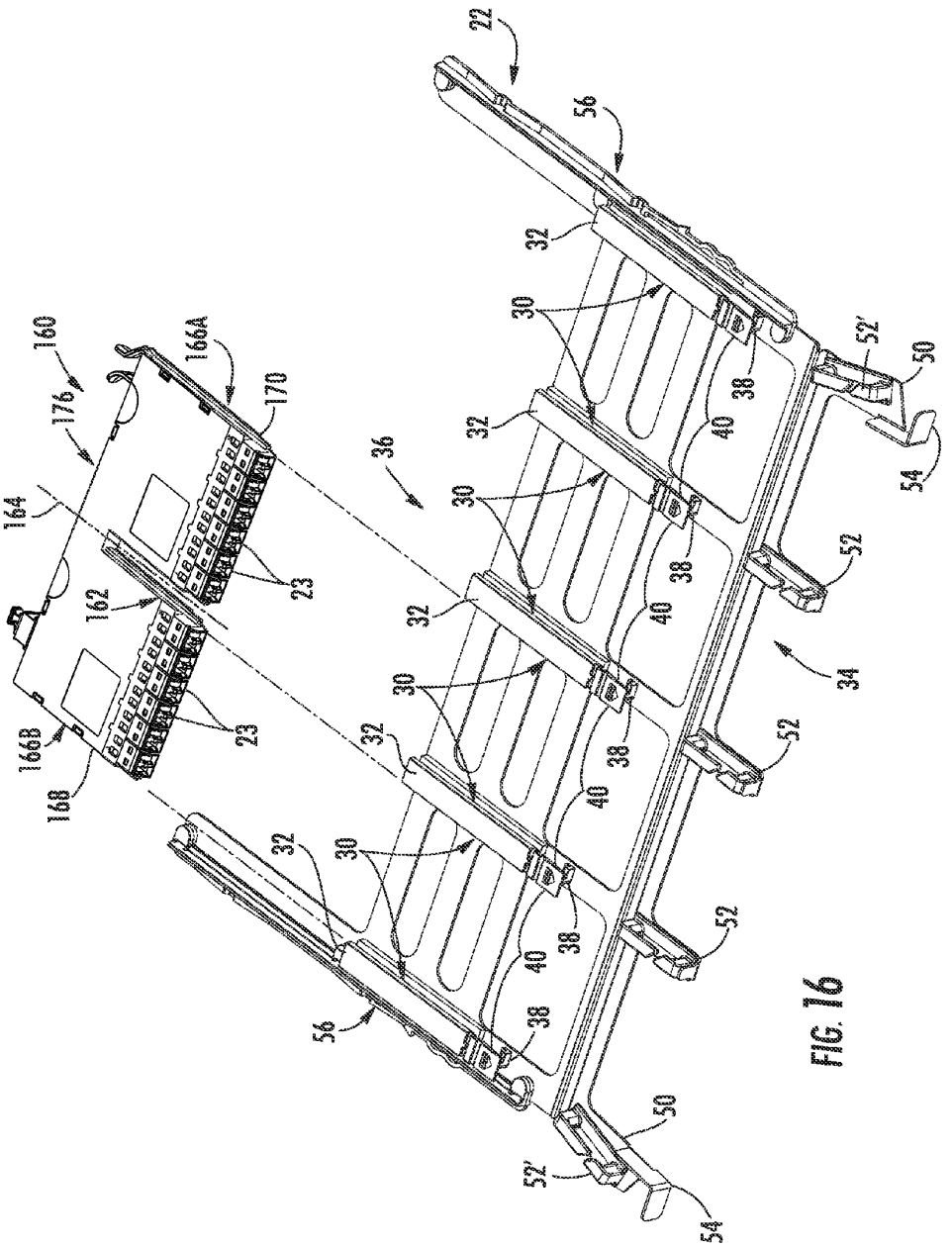
22
56
32
30
38
40
52'
50
54
36
160
176
166A
170
164
162
23
166B
168
52
34

FIG. 16

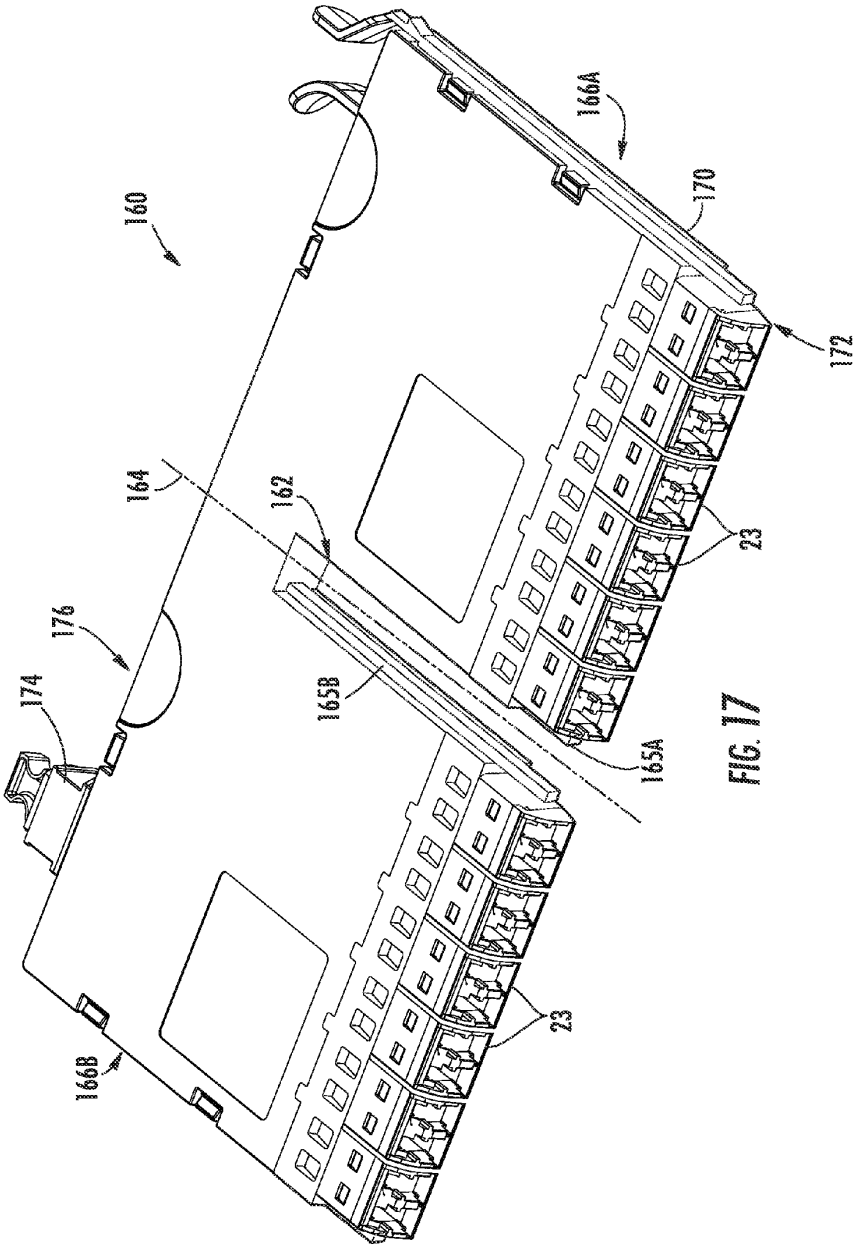

FIG. 17

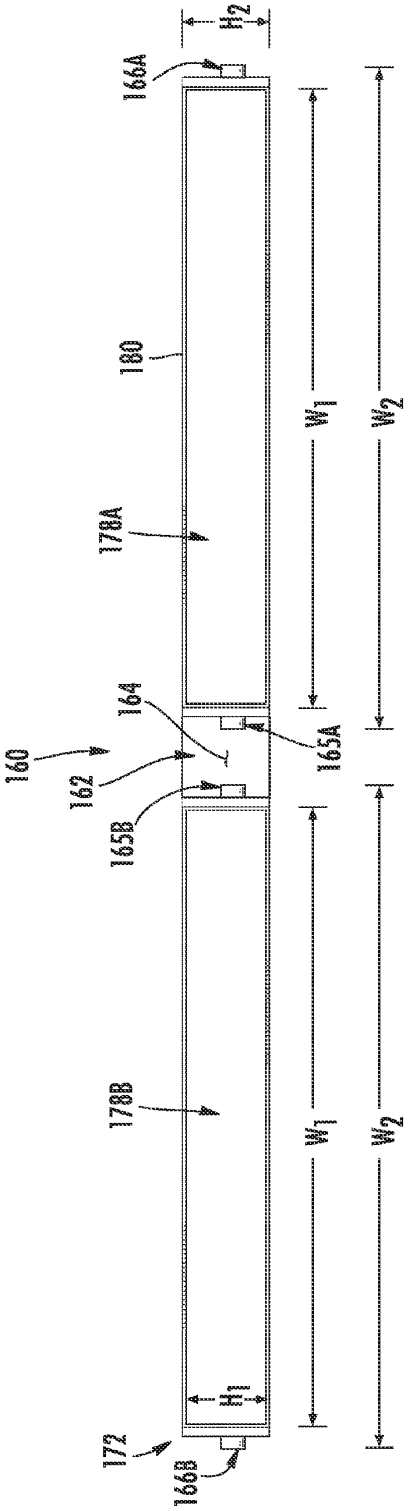
H2
166A
180
178A
164
160
162
165B
165A
178B
172
166B
H1
W1
W2
W1
W2

FIG. 18

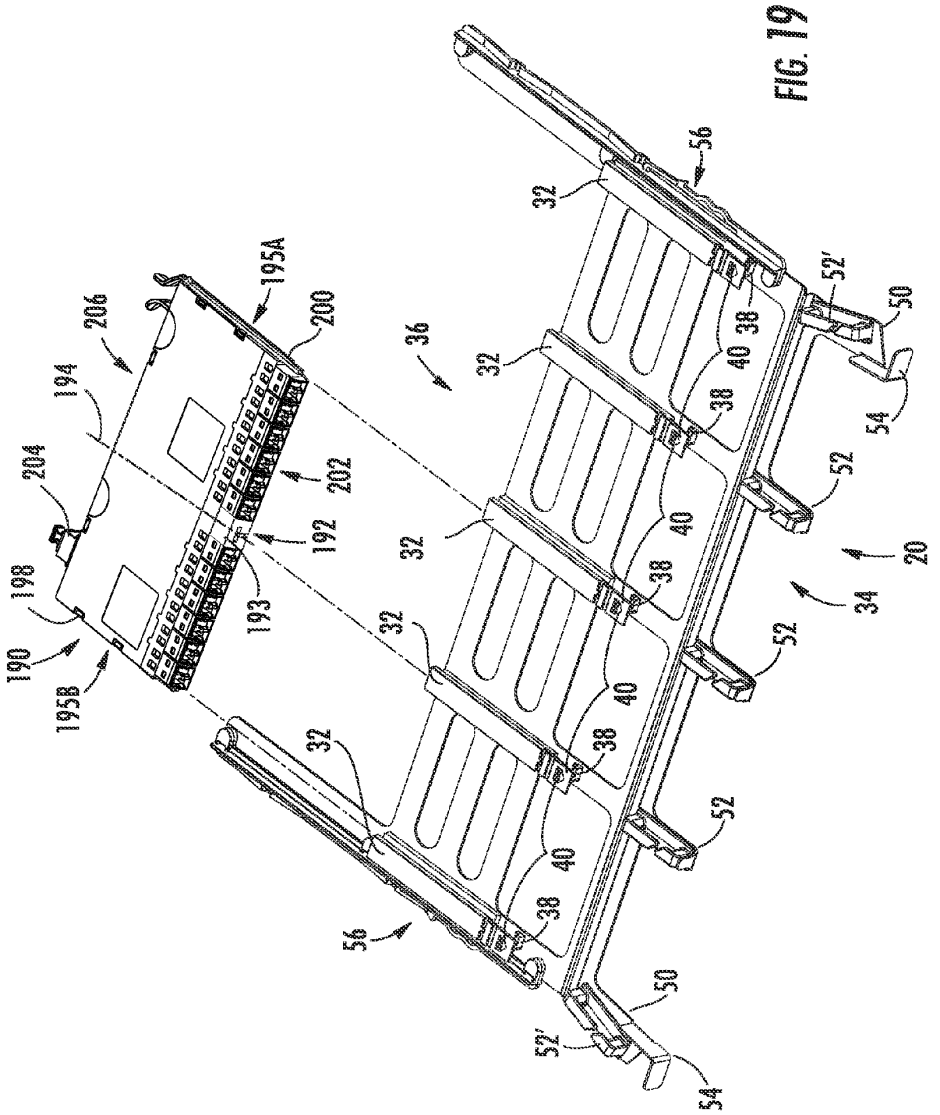

56
32
195A
200
206
194
36
32
38
40
52'
50
54
204
202
192
32
38
40
52
20
34
198
193
190
195B
32
38
40
52
32
38
40
52
56
38
50
52'
54

FIG. 19

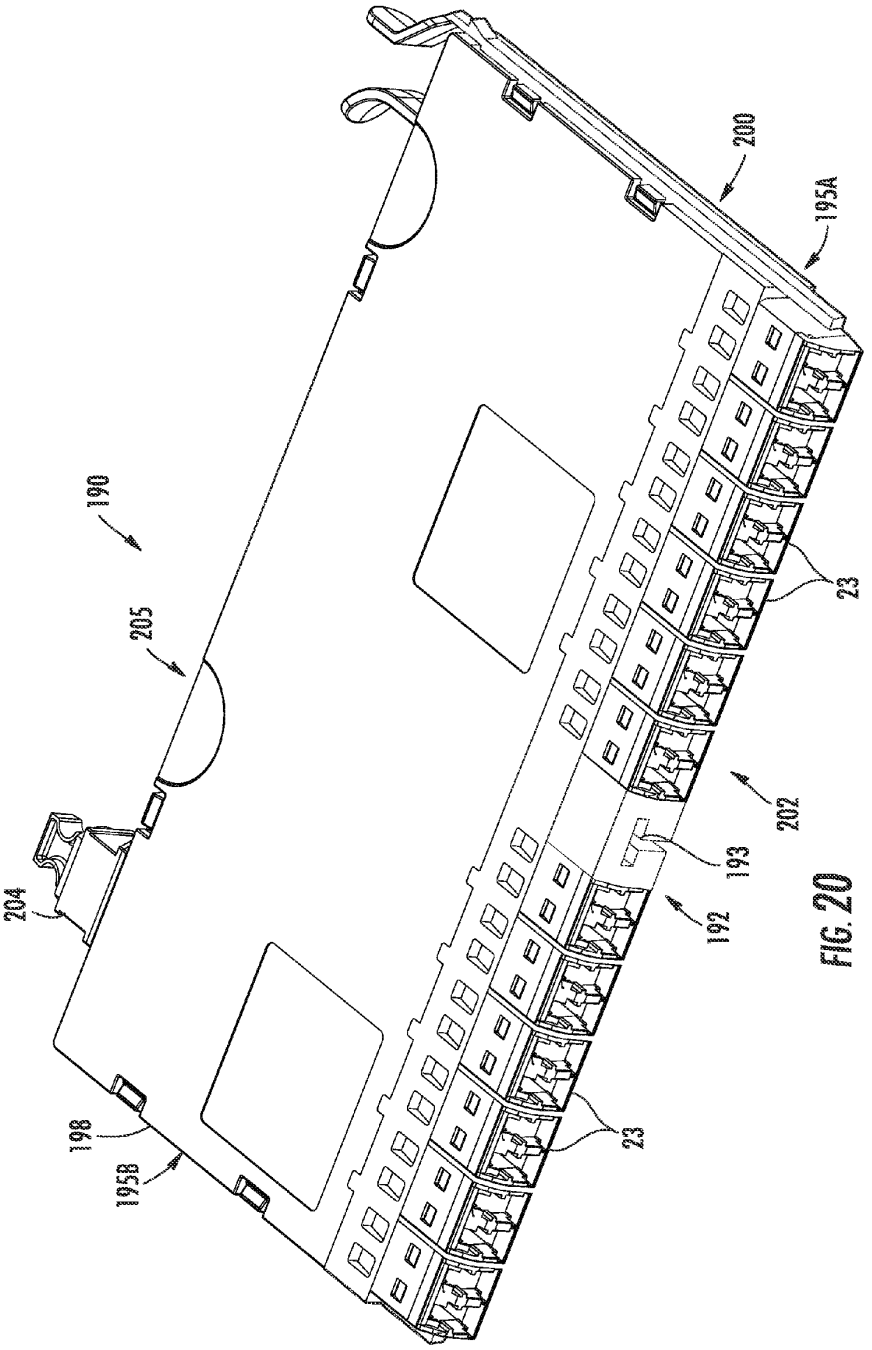

FIG. 20

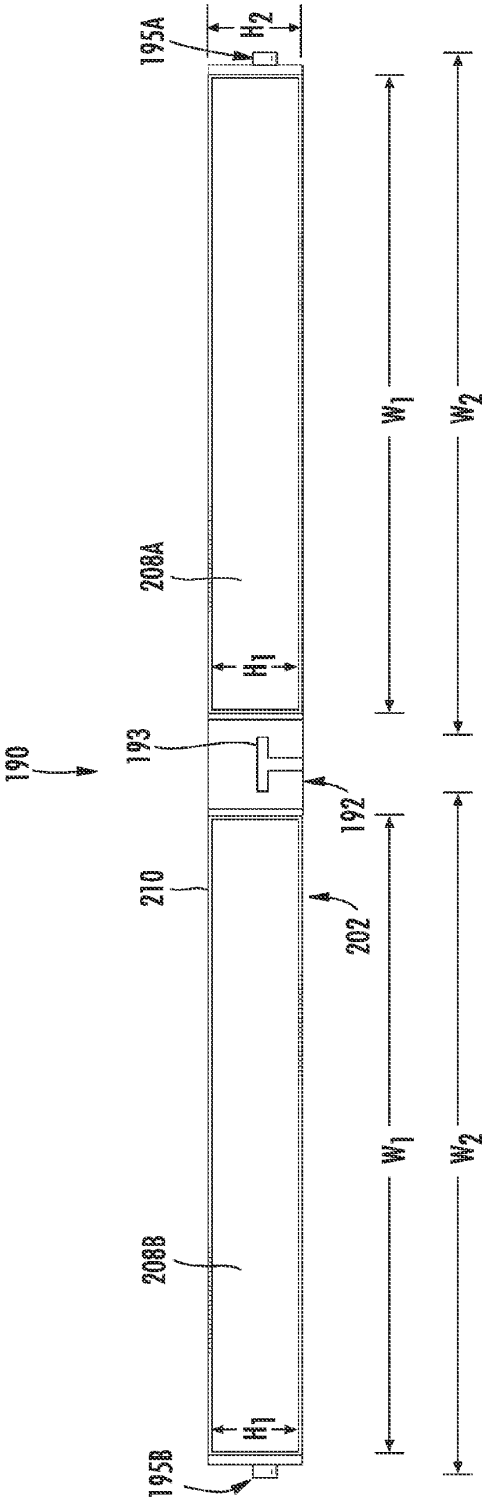

FIG. 21

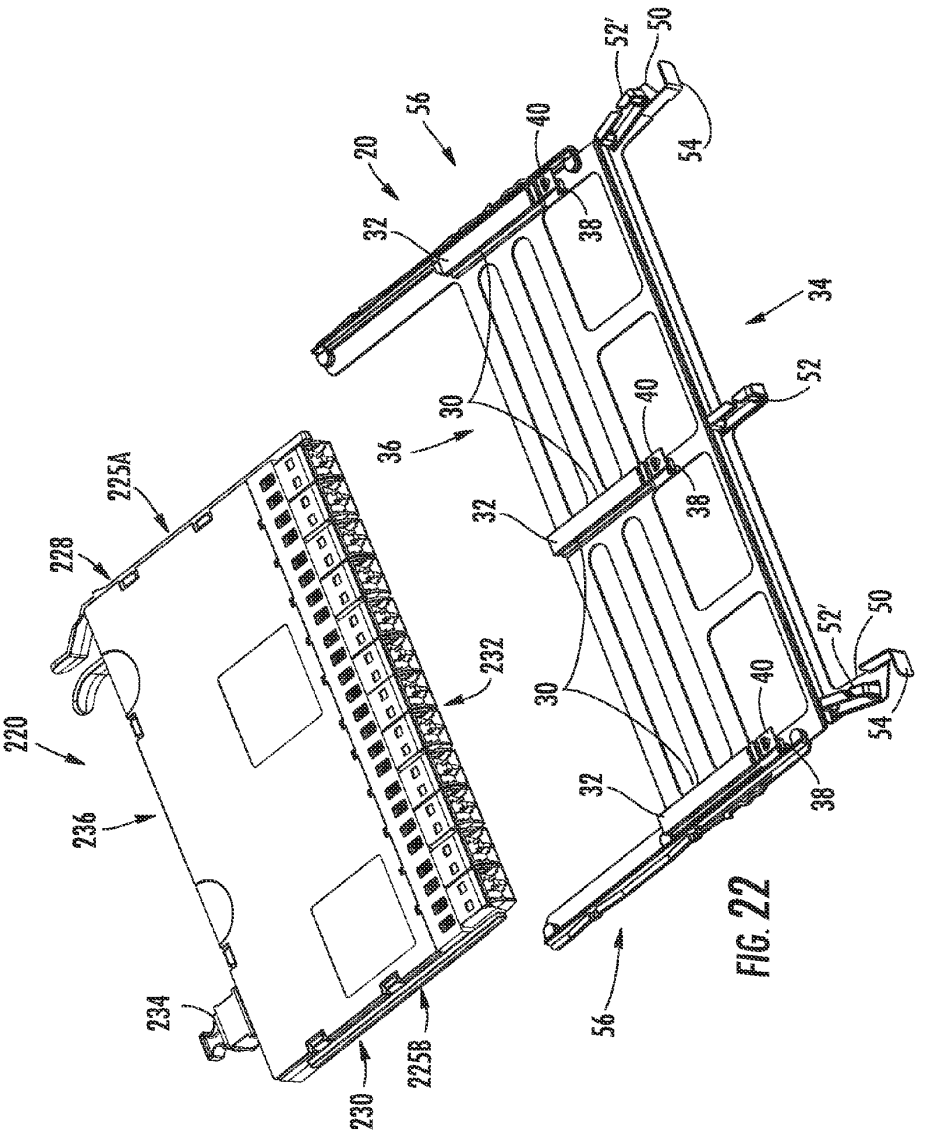
20
56
32
40
38
52'
50
54
34
52
30
36
225A
228
220
236
232
234
230
225B

FIG. 22

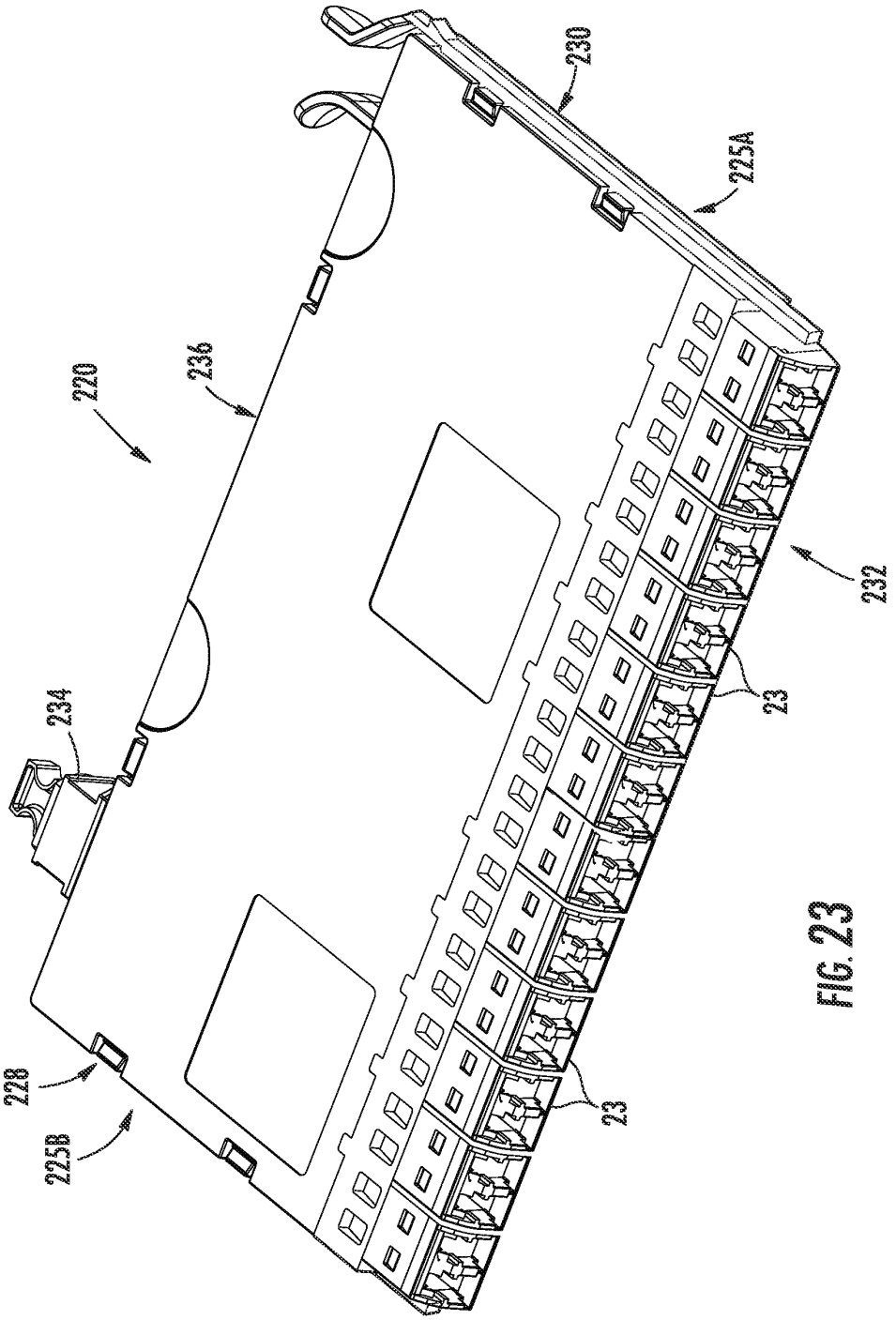

FIG. 23

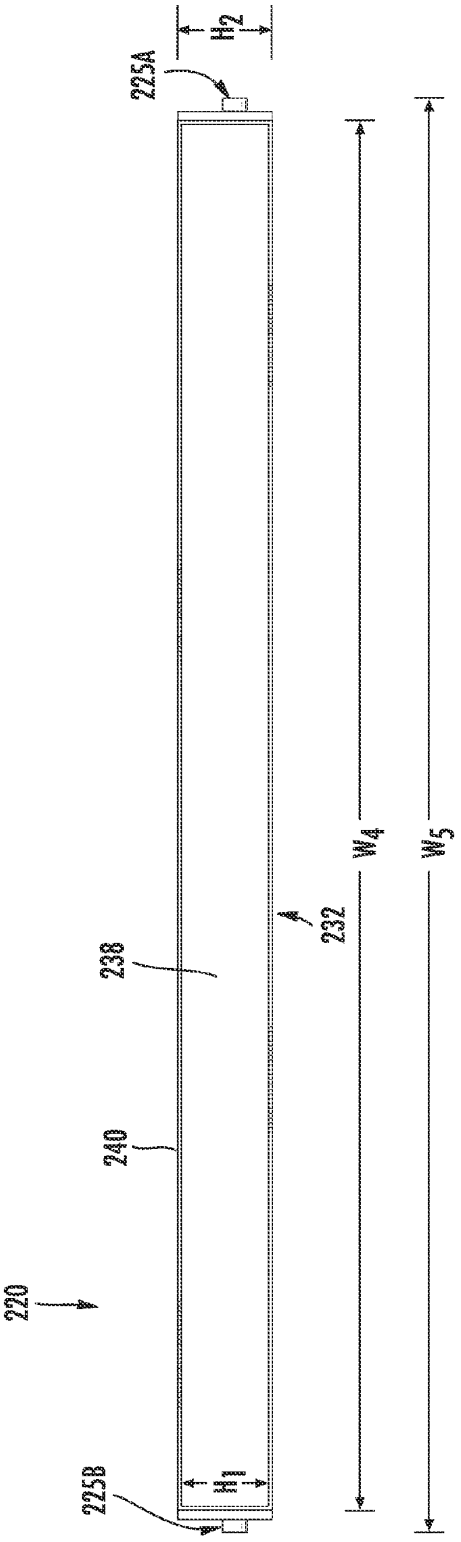

FIG. 24

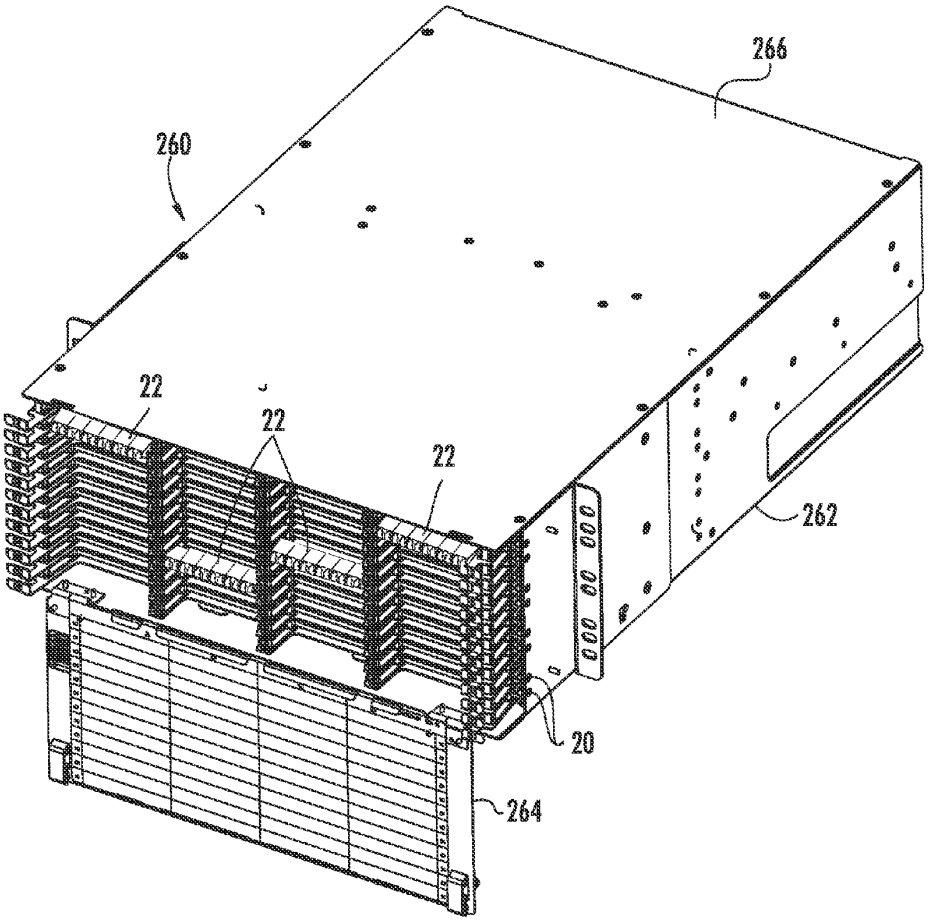

FIG. 25

HIGH-DENSITY FIBER OPTIC MODULES AND MODULE HOUSINGS AND RELATED EQUIPMENT

PRIORITY APPLICATIONS

This application claims the benefit of priority under 35 U.S.C. §119 of U.S. Provisional Application Ser. No. 61/218,870 filed on Jun. 19, 2009 and entitled "High-Density Fiber Optic Modules and Module Housings and Related Equipment", the content of which is relied upon and incorporated herein by reference in its entirety.

BACKGROUND

1. Field of the Disclosure

The technology of the disclosure relates to fiber optic modules and fiber optic modules housings provided in fiber optic equipment to support fiber optic connections.

2. Technical Background

Benefits of optical fiber include extremely wide bandwidth and low noise operation. Because of these advantages, optical fiber is increasingly being used for a variety of applications, including but not limited to broadband voice, video, and data transmission. Fiber optic networks employing optical fiber are being developed and used to deliver voice, video, and data transmissions to subscribers over both private and public networks. These fiber optic networks often include separated connection points linking optical fibers to provide "live fiber" from one connection point to another connection point. In this regard, fiber optic equipment is located in data distribution centers or central offices to support interconnections.

The fiber optic equipment is customized based on application need. The fiber optic equipment is typically included in housings that are mounted in equipment racks to optimize use of space. One example of such fiber optic equipment is a fiber optic module. A fiber optic module is designed to provide cable-to-cable fiber optic connections and/or manage the polarity of fiber optic cable connections. A fiber optic module is typically mounted to a chassis or housing which is then mounted inside an equipment rack or cabinet. A technician establishes fiber optic connections to the fiber optic modules mounted in the equipment rack. Due to increasing bandwidth needs and the need to provide a larger number of connections in data centers for increased revenue generating opportunities, a need exists to provide fiber optic modules that can facilitate larger numbers of fiber optic connections in a given space.

SUMMARY OF THE DETAILED DESCRIPTION

Embodiments disclosed in the detailed description include high-density fiber optic modules and fiber optic module housings and related equipment. In certain embodiments, the fiber optic modules and fiber optic module housings comprise a main body defining an internal chamber disposed between a front side and a rear side. A front opening is disposed along a longitudinal axis in the front side of the main body. A plurality of fiber optic components is disposed through the front opening. In certain embodiments, the width and/or height of the front opening can be provided according to a designed relationship to the width and/or height, respectively, of the front side of the main body to support fiber optic components or connections within the fiber optic module and/or fiber optic module housing. In this manner, fiber optic components can be installed in a given percentage or area of the front side of the fiber optic module to provide a high density of fiber optic connections for a given fiber optic component type(s). In other embodiments, the front opening can be provided to support a designed connection density capacity of fiber optic components or connections for a given width and/or height of the front opening of the fiber optic module and/or fiber optic module housing. The fiber optic components and connections can be provided by fiber optic adapters and/or fiber optic connectors as examples. The fiber optic modules and fiber optic module housings disclosed herein can be disposed in fiber optic equipment including but not limited to a chassis and fiber optic equipment drawer.

Additional features and advantages will be set forth in the detailed description which follows, and in part will be readily apparent to those skilled in the art from that description or recognized by practicing the invention as described herein, including the detailed description that follows, the claims, as well as the appended drawings.

It is to be understood that both the foregoing general description and the following detailed description present embodiments, and are intended to provide an overview or framework for understanding the nature and character of the disclosure. The accompanying drawings are included to provide a further understanding, and are incorporated into and constitute a part of this specification. The drawings illustrate various embodiments, and together with the description serve to explain the principles and operation of the concepts disclosed.

BRIEF DESCRIPTION OF THE FIGURES

FIG. **1** is a front perspective view of an exemplary fiber optic equipment rack with an installed exemplary 1-U size chassis supporting high-density fiber optic modules to provide a given fiber optic connection density and bandwidth capability, according to one embodiment;

FIG. **2** is a rear perspective close-up view of the chassis of FIG. **1** with fiber optic modules installed in fiber optic equipment trays installed in the fiber optic equipment;

FIG. **3** is a front perspective view of one fiber optic equipment tray with installed fiber optic modules configured to be installed in the chassis of FIG. **1**;

FIG. **4** is a close-up view of the fiber optic equipment tray of FIG. **3** without fiber optic modules installed;

FIG. **5** is a close-up view of the fiber optic equipment tray of FIG. **3** with fiber optic modules installed;

FIG. **6** is a front perspective view of the fiber optic equipment tray of FIG. **3** without fiber optic modules installed;

FIG. **7** is a front perspective view of fiber optic equipment trays supporting fiber optic modules with one fiber optic equipment tray extended out from the chassis of FIG. **1**;

FIG. **8** is a left perspective view of an exemplary tray guide disposed in the chassis of FIG. **1** configured to receive fiber optic equipment trays of FIG. **6** capable of supporting one or more fiber optic modules;

FIGS. **9**A and **9**B are perspective and top views, respectively, of an exemplary tray rail disposed on each side of the fiber optic equipment tray of FIG. **3** and configured to be received in the chassis of FIG. **1** by the tray guide of FIG. **8**;

FIGS. **10**A and **10**B are front right and left perspective views, respectively, of an exemplary fiber optic module that can be disposed in the fiber optic equipment trays of FIG. **3**;

FIG. **11** is a perspective, exploded view of the fiber optic module in FIGS. **10**A and **10**B;

FIG. **12** is a perspective top view of the fiber optic module of FIG. **11** with the cover removed and showing a fiber optic harness installed therein;

FIG. **12**A is a perspective top view of another fiber optic module with the cover removed showing the fiber optic harness installed within guides;

FIG. **13** is a front view of the fiber optic module of FIG. **11** without fiber optic components installed;

FIG. **14** is a front right perspective view of another alternate fiber optic module that supports twelve (12) fiber MPO fiber optic components and which can be installed in the fiber optic equipment tray of FIG. **3**;

FIG. **15** is front right perspective view of another alternate fiber optic module that supports twenty-four (24) fiber MPO fiber optic components and which can be installed in the fiber optic equipment tray of FIG. **3**;

FIG. **16** is a front perspective view of an alternate fiber optic module being installed in the fiber optic equipment tray of FIG. **3**;

FIG. **17** is front right perspective view of the fiber optic module of FIG. **16**;

FIG. **18** is a front view of the fiber optic module of FIGS. **16** and **17**;

FIG. **19** is a front perspective view of another alternate fiber optic module being installed in the fiber optic equipment tray of FIG. **3**;

FIG. **20** is front right perspective view of the fiber optic module of FIG. **19**;

FIG. **21** is a front view of the fiber optic module of FIGS. **19** and **20**;

FIG. **22** is a front perspective view of another alternate fiber optic module being installed in an alternate fiber optic equipment tray that can be installed in the chassis of FIG. **1**;

FIG. **23** is front right perspective view of the fiber optic module of FIG. **22**;

FIG. **24** is a front view of the fiber optic module of FIGS. **22** and **23**; and

FIG. **25** is a front perspective view of alternate exemplary 4-U size fiber optic chassis that can support the fiber optic equipment trays and fiber optic modules according to the fiber optic equipment tray and fiber optic modules disclosed.

DETAILED DESCRIPTION OF THE EMBODIMENTS

Reference will now be made in detail to certain embodiments, examples of which are illustrated in the accompanying drawings, in which some, but not all features are shown. Indeed, embodiments disclosed herein may be embodied in many different forms and should not be construed as limited to the embodiments set forth herein; rather, these embodiments are provided so that this disclosure will satisfy applicable legal requirements. Whenever possible, like reference numbers will be used to refer to like components or parts.

Embodiments disclosed in the detailed description include high-density fiber optic modules and fiber optic module housings and related equipment. In certain embodiments, the width and/or height of the front opening of fiber optic modules and/or fiber optic module housings can be provided according to a designed relationship to the width and/or height, respectively, of a front side of the main body of the fiber optic modules and fiber optic module housings to support fiber optic components or connections. In this manner, fiber optic components can be installed in a given percentage or area of the front side of the fiber optic module to provide a high density of fiber optic connections for a given fiber optic component type(s). In another embodiment, the front openings of the fiber optic modules and/or fiber optic module housings can be provided to support a designed connection density of fiber optic components or connections for a given width and/or height of the front opening of the fiber optic module and/or fiber optic module housing. Embodiments disclosed in the detailed description also include high connection density and bandwidth fiber optic apparatuses and related equipment. In certain embodiments, fiber optic apparatuses are provided and comprise a chassis defining one or more U space fiber optic equipment units, wherein at least one of the one or more U space fiber optic equipment units is configured to support a given fiber optic connection density or bandwidth in a 1-U space, and for a given fiber optic component type(s).

In this regard, FIG. **1** illustrates exemplary 1-U size fiber optic equipment **10** from a front perspective view. The fiber optic equipment **10** supports high-density fiber optic modules that support a high fiber optic connection density and bandwidth in a 1-U space, as will be described in greater detail below. The fiber optic equipment **10** may be provided at a data distribution center or central office to support cable-to-cable fiber optic connections and to manage a plurality of fiber optic cable connections. As will be described in greater detail below, the fiber optic equipment **10** has one or more fiber optic equipment trays that each support one or more fiber optic modules. However, the fiber optic equipment **10** could also be adapted to support one or more fiber optic patch panels or other fiber optic equipment that supports fiber optic components and connectivity.

The fiber optic equipment **10** includes a fiber optic equipment chassis **12** ("chassis **12**"). The chassis **12** is shown as being installed in a fiber optic equipment rack **14**. The fiber optic equipment rack **14** contains two vertical rails **16**A, **16**B that extend vertically and include a series of apertures **18** for facilitating attachment of the chassis **12** inside the fiber optic equipment rack **14**. The chassis **12** is attached and supported by the fiber optic equipment rack **14** in the form of shelves that are stacked on top of each other within the vertical rails **16**A, **16**B. As illustrated, the chassis **12** is attached to the vertical rails **16**A, **16**B. The fiber optic equipment rack **14** may support 1-U-sized shelves, with "U" equal to a standard 1.75 inches in height and seventeen (19) inches in width. In certain applications, the width of "U" may be twenty-three (23) inches. In this embodiment, the chassis **12** is 1-U in size; however, the chassis **12** could be provided in a size greater than 1-U as well.

As will be discussed in greater detail later below, the fiber optic equipment **10** includes a plurality of extendable fiber optic equipment trays **20** that each carries one or more fiber optic modules **22**. The chassis **12** and fiber optic equipment trays **20** support fiber optic modules **22** that support high-density fiber optic modules and a fiber optic connection density and bandwidth connections in a given space, including in a 1-U space. FIG. **1** shows exemplary fiber optic components **23** disposed in the fiber optic modules **22** that support fiber optic connections. For example, the fiber optic components **23** may be fiber optic adapters or fiber optic connectors. As will also be discussed in greater detail later below, the fiber optic modules **22** in this embodiment can be provided such that the fiber optic components **23** can be disposed through at least eighty-five percent (85%) of the width of the front side or face of the fiber optic module **22**, as an example. This fiber optic module **22** configuration may provide a front opening of approximately 90 millimeters (mm) or less wherein fiber optic components can be disposed through the front opening and at a fiber optic connection density of at least one fiber optic connection per 7.0 mm of width of the front opening of the fiber optic modules **22** for simplex or duplex fiber optic components **23**. In this example, six (6) duplex or twelve (12) simplex fiber optic components may be installed in each fiber

optic module **22**. The fiber optic equipment trays **20** in this embodiment support up to four (4) of the fiber optic modules **22** in approximately the width of a 1-U space, and three (3) fiber optic equipment trays **20** in the height of a 1-U space for a total of twelve (12) fiber optic modules **22** in a 1-U space. Thus, for example, if six (6) duplex fiber optic components were disposed in each of the twelve (12) fiber optic modules **22** installed in fiber optic equipment trays **20** of the chassis **12** as illustrated in FIG. **1**, a total of one hundred forty-four (144) fiber optic connections, or seventy-two (72) duplex channels (i.e., transmit and receive channels), would be supported by the chassis **12** in a 1-U space. If five (5) duplex fiber optic adapters are disposed in each of the twelve (12) fiber optic modules **22** installed in fiber optic equipment trays **20** of the chassis **12**, a total of one hundred twenty (120) fiber optic connections, or sixty (60) duplex channels, would be supported by the chassis **12** in a 1-U space. The chassis **12** also supports at least ninety-eight (98) fiber optic components in a 1-U space wherein at least one of the fiber optic components is a simplex or duplex fiber optic component.

If multi-fiber fiber optic components were installed in the fiber optic modules **22**, such as MPO components for example, higher fiber optic connection density and bandwidths would be possible over other chassis **12** that use similar fiber optic components. For example, if up to four (4) twelve (12) fiber MPO fiber optic components were disposed in each fiber optic module **22**, and twelve (12) of the fiber optic modules **22** were disposed in the chassis **12** in a 1-U space, the chassis **12** would support up to five hundred seventy-six (576) fiber optic connections in a 1-U space. If up to four (4) twenty-four (24) fiber MPO fiber optic components were disposed in each fiber optic module **22**, and twelve (12) of the fiber optic modules **22** were disposed in the chassis **12**, up to one thousand one hundred fifty-two (1152) fiber optic connections in a 1-U space.

FIG. **2** is a rear perspective close-up view of the chassis **12** of FIG. **1** with fiber optic modules **22** loaded with fiber optic components **23** and installed in fiber optic equipment trays **20** installed in the chassis **12**. Module rails **28**A, **28**B are disposed on each side of each fiber optic module **22**. The module rails **28**A, **28**B are configured to be inserted within tray channels **30** of module rail guides **32** disposed in the fiber optic equipment tray **20**, as illustrated in more detail in FIGS. **3**-**5**. Note that any number of module rail guides **32** can be provided. The fiber optic module **22** can be installed from both a front end **34** and a rear end **36** of the fiber optic equipment tray **20** in this embodiment. If it is desired to install the fiber optic module **22** in the fiber optic equipment tray **20** from the rear end **36**, a front end **33** of the fiber optic module **22** can be inserted from the rear end **36** of the fiber optic equipment tray **20**. More specifically, the front end **33** of the fiber optic module **22** is inserted into the tray channels **30** of the module rail guides **32**. The fiber optic module **22** can then be pushed forward within the tray channels **30** until the fiber optic module **22** reaches the front end **34** of the module rail guides **32**. The fiber optic modules **22** can be moved towards the front end **34** until the fiber optic modules **22** reach a stop or locking feature disposed in the front end **34** as will described later in this application. FIG. **6** also illustrates the fiber optic equipment tray **20** without installed fiber optic modules **22** to illustrate the tray channels **30** and other features of the fiber optic equipment tray **20**.

The fiber optic module **22** can be locked into place in the fiber optic equipment tray **20** by pushing the fiber optic module **22** forward to the front end **33** of the fiber optic equipment tray **20**. A locking feature in the form of a front stop **38** is disposed in the module rail guides **32**, as illustrated in FIG. **3** and in more detail in the close-up view in FIG. **4**. The front stop **38** prevents the fiber optic module **22** from extending beyond the front end **34**, as illustrated in the close-up view of the fiber optic equipment tray **20** with installed fiber optic modules **22** in FIG. **5**. When it is desired to remove a fiber optic module **22** from the fiber optic equipment tray **20**, a front module tab **40** also disposed in the module rail guides **32** and coupled to the front stop **38** can be pushed downward to engage the front stop **38**. As a result, the front stop **38** will move outward away from the fiber optic module **22** such that the fiber optic module **22** is not obstructed from being pulled forward. The fiber optic module **22**, and in particular its module rails **28**A, **28**B (FIG. **2**), can be pulled forward along the module rail guides **32** to remove the fiber optic module **22** from the fiber optic equipment tray **20**.

The fiber optic module **22** can also be removed from the rear end **36** of the fiber optic equipment tray **20**. To remove the fiber optic module **22** from the rear end **36** of the fiber optic equipment tray **20**, a latch **44** is disengaged by pushing a lever **46** (see FIGS. **2** and **3**; see also, FIGS. **10**A and **10**B) inward towards the fiber optic module **22** to release the latch **44** from the module rail guide **32**. To facilitate pushing the lever **46** inward towards the fiber optic module **22**, a finger hook **48** is provided adjacent to the lever **46** so the lever **46** can easily be squeezed into the finger hook **48** by a thumb and index finger.

With continuing reference to FIG. **3**-**6**, the fiber optic equipment tray **20** may also contain extension members **50**. Routing guides **52** may be conveniently disposed on the extension members **50** to provide routing for optical fibers or fiber optic cables connected to fiber optic components **23** disposed in the fiber optic modules **22** (FIG. **3**). The routing guides **52'** on the ends of the fiber optic equipment tray **20** may be angled with respect to the module rail guides **32** to route optical fibers or fiber optic cables at an angle to the sides of the fiber optic equipment tray **20**. Pull tabs **54** may also be connected to the extension members **50** to provide a means to allow the fiber optic equipment tray **20** to easily be pulled out from and pushed into the chassis **12**.

As illustrated in FIGS. **3** and **6**, the fiber optic equipment tray **20** also contains tray rails **56**. The tray rails **56** are configured to be received in tray guides **58** disposed in the chassis **12** to retain and allow the fiber optic equipment trays **20** to move in and out of the chassis **12**, as illustrated in FIG. **7**. More detail regarding the tray rails **56** and their coupling to the tray guides **58** in the chassis **12** is discussed below with regard to FIGS. **8** and **9**A-**9**B. The fiber optic equipment trays **20** can be moved in and out of the chassis **12** by their tray rails **56** moving within the tray guides **58**. In this manner, the fiber optic equipment trays **20** can be independently movable about the tray guides **58** in the chassis **12**. FIG. **7** illustrates a front perspective view of one fiber optic equipment tray **20** pulled out from the chassis **12** among three (3) fiber optic equipment trays **20** disposed within the tray guides **58** of the chassis **12**. The tray guides **58** may be disposed on both a left side end **60** and a right side end **62** of the fiber optic equipment tray **20**. The tray guides **58** are installed opposite and facing each other in the chassis **12** to provide complementary tray guides **58** for the tray rails **56** of the fiber optic equipment trays **20** received therein. If it is desired to access a particular fiber optic equipment tray **20** and/or a particular fiber optic module **22** in a fiber optic equipment tray **20**, the pull tab **54** of the desired fiber optic equipment tray **20** can be pulled forward to cause the fiber optic equipment tray **20** to extend forward out from the chassis **12**, as illustrated in FIG. **7**. The fiber optic module **22** can be removed from the fiber optic equipment tray **20** as previously discussed. When access is completed, the fiber optic equipment tray **20** can be pushed back into the

chassis **12** wherein the tray rails **56** move within the tray guides **58** disposed in the chassis **12**.

FIG. **8** is a left perspective view of an exemplary tray guide **58** disposed in the chassis **12** of FIG. **1**. As discussed above, the tray guides **58** are configured to receive fiber optic equipment trays **20** supporting one or more fiber optic modules **22** in the chassis **12**. The tray guides **58** allow the fiber optic equipment trays **20** to be pulled out from the chassis **12**, as illustrated in FIG. **7**. The tray guide **58** in this embodiment is comprised of a guide panel **64**. The guide panel **64** may be constructed out of any material desired, including but not limited to a polymer or metal. The guide panel **64** contains a series of apertures **66** to facilitate attachment of the guide panel **64** to the chassis **12**, as illustrated in FIG. **8**. Guide members **68** are disposed in the guide panel **64** and configured to receive the tray rail **56** of the fiber optic equipment tray **20**. Three (3) guide members **68** are disposed in the guide panel **64** in the embodiment of FIG. **8** to be capable of receiving up to three (3) tray rails **56** of three (3) fiber optic equipment trays **20** in a 1-U space. However, any number of guide members **68** desired may be provided in the tray guide **58** to cover sizes less than or greater than a 1-U space. In this embodiment, the guide members **68** each include guide channels **70** configured to receive and allow tray rails **56** to move along the guide channels **70** for translation of the fiber optic equipment trays **20** about the chassis **12**.

Leaf springs **72** are disposed in each of the guide members **68** of the tray guide **58** and are each configured to provide stopping positions for the tray rails **56** during movement of the fiber optic equipment tray **20** in the guide members **68**. The leaf springs **72** each contain detents **74** that are configured to receive protrusions **76** (FIG. **9**A-**9**D) disposed in the tray rails **56** to provide stopping or resting positions. The tray rails **56** contain mounting platforms **75** that are used to attach the tray rails **56** to the fiber optic equipment trays **20**. It may be desirable to provide stopping positions in the tray guide **56** to allow the fiber optic equipment trays **20** to have stopping positions when moved in and out of the chassis **12**. Two (2) protrusions **76** in the tray rail **56** are disposed in two (2) detents **74** in the tray guide **58** at any given time. When the fiber optic equipment tray **20** is fully retracted into the chassis **12** in a first stopping position, the two (2) protrusions **76** of the tray rail **56** are disposed in the one detent **74** adjacent a rear end **77** of the guide channel **70** and the middle detent **74** disposed between the rear end **77** and a front end **78** of the guide channel **70**. When the fiber optic equipment tray **20** is pulled out from the chassis **12**, the two (2) protrusions **76** of the tray rail **56** are disposed in the one detent **74** adjacent the front end **78** of the guide channel **70** and the middle detent **74** disposed between the rear end **77** and the front end **78** of the guide channel **70**.

As the tray rail **56** is pulled within the guide channel **70**, a protrusion **80** disposed in the tray rail **56** and illustrated in FIGS. **9**A and **9**B is biased to pass over transition members **82** disposed between the leaf springs **72**, as illustrated in FIG. **8**. The protrusion **80** is provided in a leaf spring **81** disposed in the tray rail **56**, as illustrated in FIGS. **9**A and **9**B. The transition members **82** have inclined surfaces **84** that allow the protrusion **80** to pass over the transition members **82** as the fiber optic equipment tray **20** is being translated with the guide channel **70**. As the protrusion **80** contains the transition members **82**, the force imparted onto the protrusion **80** causes the leaf spring **81** to bend inward to allow the protrusion **80** to pass over the transition member **82**. To prevent the tray rail **56** and thus the fiber optic equipment tray **20** from being extended beyond the front end **78** and rear end **77** of the guide channel **70**, stopping members **86** are disposed at the front end **78** and rear end **77** of the guide channel **70**. The stopping members **86** do not have an inclined surface; thus the protrusion **80** in the tray rail **56** abuts against the stopping member **86** and is prevented from extending over the stopping member **86** and outside of the front end **78** of the guide channel **70**.

Against the background of the above disclosed embodiment of a 1-U chassis **12** and fiber optic equipment trays **20** and fiber optic modules **22** that can installed therein, the form factor of the fiber optic module **22** will now be described. The form factor of the fiber optic module **22** allows a high density of fiber optic components **23** to be disposed within a certain percentage area of the front of the fiber optic module **22** thus supporting a particular fiber optic connection density and bandwidth for a given type of fiber optic component **23**. When this fiber optic module **22** form factor is combined with the ability to support up to twelve (12) fiber optic modules **22** in a 1-U space, as described by the exemplary chassis **12** example above, a higher fiber optic connection density and bandwidth is supported and possible.

In this regard, FIGS. **10**A and **10**B are right and left perspective views of the exemplary fiber optic module **22**. As discussed above, the fiber optic module **22** can be installed in the fiber optic equipment trays **20** to provide fiber optic connections in the chassis **12**. The fiber optic module **22** is comprised of a main body **90** receiving a cover **92**. An internal chamber **94** (FIG. **11**) disposed inside the main body **90** and the cover **92** and is configured to receive or retain optical fibers or a fiber optic cable harness, as will be described in more detail below. The main body **90** is disposed between a front side **96** and a rear side **98** of the main body **90**. Fiber optic components **23** can be disposed through the front side **96** of the main body **90** and configured to receive fiber optic connectors connected to fiber optic cables (not shown). In this example, the fiber optic components **23** are duplex LC fiber optic adapters that are configured to receive and support connections with duplex LC fiber optic connectors. However, any fiber optic connection type desired can be provided in the fiber optic module **22**. The fiber optic components **23** are connected to a fiber optic component **100** disposed through the rear side **98** of the main body **90**. In this manner, a connection to the fiber optic component **23** creates a fiber optic connection to the fiber optic component **100**. In this example, the fiber optic component **100** is a multi-fiber MPO fiber optic adapter equipped to establish connections to multiple optical fibers (e.g., either twelve (12) or twenty-four (24) optical fibers). The fiber optic module **22** may also manage polarity between the fiber optic components **23**, **100**.

The module rails **28**A, **28**B are disposed on each side **102**A, **102**B of the fiber optic module **22**. As previously discussed, the module rails **28**A, **28**B are configured to be inserted within the module rail guides **32** in the fiber optic equipment tray **20**, as illustrated in FIG. **3**. In this manner, when it is desired to install a fiber optic module **22** in the fiber optic equipment tray **20**, the front side **96** of the fiber optic module **22** can be inserted from either the front end **33** or the rear end **36** of the fiber optic equipment tray **20**, as previously discussed.

FIG. **11** illustrates the fiber optic module **22** in an exploded view with the cover **92** of the fiber optic module **22** removed to illustrate the internal chamber **94** and other internal components of the fiber optic module **22**. FIG. **12** illustrates the fiber optic module **22** assembled, but without the cover **92** installed on the main body **90**. The cover **92** includes notches **106** disposed in sides **108**, **110** that are configured to interlock with protrusions **112** disposed on the sides **102**A, **102**B of the main body **90** of the fiber optic modules **22** when the cover **92** is attached to the main body **90** to secure the cover **92** to the

main body **90**. The cover **92** also contains notches **114**, **116** disposed on a front side **118** and rear side **120**, respectively, of the cover **92**. The notches **114**, **116** are configured to interlock with protrusions **122**, **124** disposed in the front side **96** and the rear end **98**, respectively, of the main body **90** when the cover **92** is attached to the main body **90** to also secure the cover **92** to the main body **90**. FIG. **12** does not show protrusions **122**, **124**.

With continuing reference to FIG. **11**, the fiber optic components **23** are disposed through a front opening **126** disposed along a longitudinal axis L_1 in the front side **96** of the main body **90**. In this embodiment, the fiber optic components **23** are duplex LC adapters **128**, which support single or duplex fiber connections and connectors. The duplex LC adapters **128** in this embodiment contain protrusions **130** that are configured to engage with orifices **135** disposed on the main body **90** to secure the duplex LC adapters **128** in the main body **90** in this embodiment. A cable harness **134** is disposed in the internal chamber **94** with fiber optic connectors **136**, **138** disposed on each end of optical fibers **139** connected to the duplex LC adapters **128** and the fiber optic component **100** disposed in the rear side **98** of the main body **90**. The fiber optic component **100** in this embodiment is a twelve (12) fiber MPO fiber optic adapter **140** in this embodiment. Two vertical members **142**A, **142**B (i.e., fiber guides) are disposed in the internal chamber **94** of the main body **90**, as illustrated in FIG. **12**, to retain the looping of the optical fibers **139** of the cable harness **134**. The vertical members **142**A, **142**B and the distance therebetween are designed to provide a bend radius R in the optical fibers **139** no greater than forty (40) millimeters and preferably twenty-five (25) millimeters or less, thereby aiding in maintaining a high fiber optic connector density.

Other structures besides vertical members **142**A,**142**B of FIG. **12** are possible for fiber guides that retain and/or route the cable harness **134** within the module to inhibit damage, organize, maintain a bend radius and/or make the device easier to assemble. The fiber guide structure is also useful for maintaining a bend radius R for the optical fibers. By way of example, FIG. **12**A shows a perspective top view of another fiber optic module **22** with the cover removed showing the fiber optic harness **134** installed within a plurality of fiber guides **143**,**144** for retaining and routing the optical fibers of fiber optic harness **134**. Any suitable shape for the fiber guides are possible along with a suitable number of fiber guides in the module. Moreover, one or more of the fiber guides can be shaped to accommodate a furcation body for the ribbon to individual fiber transition or the like. In this embodiment, fiber guides **143**,**144** have two different shapes and have three different locations. Specifically, fiber guides **143** are configured as L-guides and are located at a suitably spaced apart locations and fiber guide **144** is a J-guide spaced apart from fiber guides **143**. Consequently, the assembler can easily and quickly install the cable harness **134** into the internal chamber **94** of main body **90** using fiber guides **143**,**144**. Moreover, the fiber guides **143**,**144** ensure an adequate bend radius for the optical fibers of the fiber optic harness **134** and inhibits pinching of the optical fibers when installing the cover. Fiber guides **143**,**144** may be configured in any suitable arrangement such molded with main body **90** or configured separate components. For instance, other arrangements may have retention pins molded into main body **90** for receiving and securing discrete fiber guides using a friction fit and/or adhesive; however, this adds manufacturing complexity.

FIG. **13** illustrates a front view of the fiber optic module **22** without loaded fiber optic components **23** in the front side **96** to further illustrate the form factor of the fiber optic module **22**. As previously discussed, the front opening **126** is disposed through the front side **96** of the main body **90** to receive the fiber optic components **23**. The greater the width W_1 of the front opening **126**, the greater the number of fiber optic components **23** that may be disposed in the fiber optic module **22**. Greater numbers of fiber optic components **23** equates to more fiber optic connections, which supports higher fiber optic connectivity and bandwidth. However, the larger the width W_1 of the front opening **126**, the greater the area required to be provided in the chassis **12** for the fiber optic module **22**. Thus, in this embodiment, the width W_1 of the front opening **126** is design to be at least eighty-five percent (85%) of the width W_2 of the front side **96** of the main body **90** of the fiber optic module **22**. The greater the percentage of the width W_1 to width W_2, the larger the area provided in the front opening **126** to receive fiber optic components **23** without increasing width W_2. Width W_3, the overall width of the fiber optic module **22**, may be 86.6 mm or 3.5 inches in this embodiment. The overall depth D_1 of the fiber optic module **22** is 113.9 mm or 4.5 inches in this embodiment (FIG. **12**). As previously discussed, the fiber optic module **22** is designed such that four (4) fiber optic modules **22** can be disposed in a 1-U width space in the fiber optic equipment tray **20** in the chassis **12**. The width of the chassis **12** is designed to accommodate a 1-U space width in this embodiment.

With three (3) fiber optic equipment trays **20** disposed in the 1-U height of the chassis **12**, a total of twelve (12) fiber optic modules **22** can be supported in a given 1-U space. Supporting up to twelve (12) fiber optic connections per fiber optic module **22** as illustrated in the chassis **12** in FIG. **1** equates to the chassis **12** supporting up to one hundred forty-four (144) fiber optic connections, or seventy-two (72) duplex channels, in a 1-U space in the chassis **12** (i.e., twelve (12) fiber optic connections X twelve (12) fiber optic modules **22** in a 1-U space). Thus, the chassis **12** is capable of supporting up to one hundred forty-four (144) fiber optic connections in a 1-U space by twelve (12) simplex or six (6) duplex fiber optic adapters being disposed in the fiber optic modules **22**. Supporting up to ten (10) fiber optic connections per fiber optic module **22** equates to the chassis **12** supporting one hundred twenty (120) fiber optic connections, or sixty (60) duplex channels, in a 1-U space in the chassis **12** (i.e., ten (10) fiber optic connections X twelve (12) fiber optic modules **22** in a 1-U space). Thus, the chassis **12** is also capable of supporting up to one hundred twenty (120) fiber optic connections in a 1-U space by ten (10) simplex or five (5) duplex fiber optic adapters being disposed in the fiber optic modules **22**.

This embodiment of the chassis **12** and fiber optic module **22** disclosed herein can support a fiber optic connection density within a 1-U space wherein the area occupied by the fiber optic component **23** in twelve (12) fiber optic modules **22** in a 1-U space represents at least fifty percent (50%) of the total fiber optic equipment rack **14** area in a 1-U space (see FIG. **1**). In the case of twelve (12) fiber optic modules **22** provided in a 1-U space in the chassis **12**, the 1-U space is comprised of the fiber optic components **23** occupying at least seventy-five percent (75%) of the area of the front side **96** of the fiber optic module **22**.

Two (2) duplexed optical fibers to provide one (1) transmission/reception pair can allow for a data rate of ten (10) Gigabits per second in half-duplex mode or twenty (20) Gigabits per second in full-duplex mode. Thus, with the above-described embodiment, providing at least seventy-two (72) duplex transmission and reception pairs in a 1-U space employing at least one duplex or simplex fiber optic component can support a data rate of at least seven hundred twenty (720) Gigabits per second in half-duplex mode in a 1-U space or at least one thousand four hundred forty (1440) Gigabits

per second in a 1-U space in full-duplex mode if employing a ten (10) Gigabit transceiver. This configuration can also support at least six hundred (600) Gigabits per second in half-duplex mode in a 1-U space and at least one thousand two hundred (1200) Gigabits per second in full-duplex mode in a 1-U space, respectively, if employing a one hundred (100) Gigabit transceiver. This configuration can also support at least four hundred eighty (480) Gigabits per second in half-duplex mode in a 1-U space and nine hundred sixty (960) Gigabits per second in full duplex mode in a 1-U space, respectively, if employing a forty (40) Gigabit transceiver. At least sixty (60) duplex transmission and reception pairs in a 1-U space can allow for a data rate of at least six hundred (600) Gigabits per second in a 1-U space in half-duplex mode or at least one thousand two hundred (1200) Gigabits per second in a 1-U space in full-duplex mode when employing a ten (10) Gigabit transceiver. At least forty nine (49) duplex transmission and reception pairs in a 1-U space can allow for a data rate of at least four hundred eighty-one (481) Gigabits per second in half-duplex mode or at least nine hundred sixty-two (962) Gigabits per second in a 1-U space in full-duplex mode when employing a ten (10) Gigabit transceiver.

The width W_1 of front opening **126** could be designed to be greater than eighty-five percent (85%) of the width W_2 of the front side **96** of the main body **90** of the fiber optic module **22**. For example, the width W_1 could be designed to be between ninety percent (90%) and ninety-nine percent (99%) of the width W_2. As an example, the width W_1 could be less than ninety (90) mm. As another example, the width W_1 could be less than eighty-five (85) mm or less than eighty (80) mm. For example, the width W_1 may be eighty-three (83) mm and width W_2 may be eighty-five (85) mm, for a ratio of width W_1 to width W_2 of 97.6%. In this example, the front opening **126** may support twelve (12) fiber optic connections in the width W_1 to support a fiber optic connection density of at least one fiber optic connection per 7.0 mm of width W_1 of the front opening **126**. Further, the front opening **126** of the fiber optic module **22** may support twelve (12) fiber optic connections in the width W_1 to support a fiber optic connection density of at least one fiber optic connection per 6.9 mm of width W_1 of the front opening **126**.

Further as illustrated in FIG. **13**, height H_1 of front opening **126** could be designed to be at least ninety percent (90%) of height H_2 of the front side **96** of the main body **90** of the fiber optic module **22**. In this manner, the front opening **126** has sufficient height to receive the fiber optic components **23**, and such that three (3) fiber optic modules **22** can be disposed in a 1-U space height. As an example, height H_1 could be twelve (12) mm or less or ten (10) mm or less. As an example, height H_1 could be ten (10) mm and height H_2 could be eleven (11) mm (or 7/16 inches), for a ratio of height H_1 to width H_2 of 90.9%.

Alternate fiber optic modules with alternative fiber optic connection densities are possible. FIG. **14** is a front perspective view of an alternate fiber optic module **22'** that can be installed in the fiber optic equipment tray **20** of FIG. **1**. The form factor of the fiber optic module **22'** is the same as the form factor of the fiber optic module **22** illustrated in FIGS. **1-13**. However, in the fiber optic module **22'** of FIG. **14**, two (2) MPO fiber optic adapters **150** are disposed through the front opening **126** of the fiber optic module **22'**. The MPO fiber optic adapters **150** are connected to two (2) MPO fiber optic adapters **152** disposed in the rear side **98** of the main body **90** of the fiber optic module **22'**. Thus, if the MPO fiber optic adapters **150** each support twelve (12) fibers, the fiber optic module **22'** can support up to twenty-four (24) fiber optic connections. Thus, in this example, if up to twelve (12) fiber optic modules **22'** are provided in the fiber optic equipment trays **20** of the chassis **12**, up to two hundred eighty-eight (288) fiber optic connections can be supported by the chassis **12** in a 1-U space. Further in this example, the front opening **126** of the fiber optic module **22'** may support twenty-four (24) fiber optic connections in the width W_1 (FIG. **13**) to support a fiber optic connection density of at least one fiber optic connection per 3.4-3.5 mm of width W_1 of the front opening **126**. It should be understood that the discussion with regard to modules may also apply to a panel. For purposes of this disclosure, a panel may have one or more adapters on one side and no adapters on the opposite side.

Thus, with the above-described embodiment, providing at least two-hundred eighty-eight (288) duplex transmission and reception pairs in a 1-U space employing at least one twelve (12) fiber MPO fiber optic components can support a data rate of at least two thousand eight hundred eighty (2880) Gigabits per second in half-duplex mode in a 1-U space or at least five thousand seven hundred sixty (5760) Gigabits per second in a 1-U space in full-duplex mode if employing a ten (10) Gigabit transceiver. This configuration can also support at least four thousand eight hundred (4800) Gigabits per second in half-duplex mode in a 1-U space and nine thousand six hundred (9600) Gigabits per second in full-duplex mode in a 1-U space, respectively, if employing a one hundred (100) Gigabit transceiver. This configuration can also support at least one thousand nine hundred twenty (1920) Gigabits per second in half-duplex mode in a 1-U space and three thousand eight hundred forty (3840) Gigabits per second in full-duplex mode in a 1-U space, respectively, if employing a forty (40) Gigabit transceiver. This configuration also supports a data rate of at least four thousand three hundred twenty-two (4322) Gigabits per second in full-duplex mode in a 1-U space when employing a ten (10) Gigabit transceiver employing at least one twelve (12) fiber MPO fiber optic component, or two thousand one hundred sixty-one (2161) Gigabits per second in full-duplex mode in a 1-U space when employing a ten (10) Gigabit transceiver employing at least one twenty-four (24) fiber MPO fiber optic component.

If the MPO fiber optic adapters **150** in the fiber optic module **22'** support twenty-four (24) fibers, the fiber optic module **22'** can support up to forty-eight (48) fiber optic connections. Thus, in this example, if up to twelve (12) fiber optic modules **22'** are provided in the fiber optic equipment trays **20** of the chassis **12**, up to five hundred seventy-six (576) fiber optic connections can be supported by the chassis **12** in a 1-U space if the fiber optic modules **22'** are disposed in the fiber optic equipment trays **20**. Further, in this example, the front opening **126** of the fiber optic module **22'** may support up to forty-eight (48) fiber optic connections in the width W_1 to support a fiber optic connection density of at least one fiber optic connection per 1.7 mm of width W_1 of the front opening **126**.

FIG. **15** is a front perspective view of another alternate fiber optic module **22"** that can be installed in the fiber optic equipment tray **20** of FIG. **1**. The form factor of the fiber optic module **22"** is the same as the form factor of the fiber optic module **22** illustrated in FIGS. **1-13**. However, in the fiber optic module **22"**, four (4) MPO fiber optic adapters **154** are disposed through the front opening **126** of the fiber optic module **22"**. The MPO fiber optic adapters **154** are connected to four (4) MPO fiber optic adapters **156** disposed in the rear end **98** of the main body **90** of the fiber optic module **22'**. Thus, if the MPO fiber optic adapters **150** support twelve (12) fibers, the fiber optic module **22"** can support up to forty-eight (48) fiber optic connections. Thus, in this example, if up to twelve (12) fiber optic modules **22"** are provided in the fiber optic

equipment trays **20** of the chassis **12**, up to five hundred seventy-six (756) fiber optic connections can be supported by the chassis **12** in a 1-U space. Further in this example, the front opening **126** of the fiber optic module **22"** may support twenty-four (24) fiber optic connections in the width W_1 to support a fiber optic connection density of at least one fiber optic connection per 1.7 mm of width W_1 of the front opening **126**.

If the four (4) MPO fiber optic adapters **154** disposed in the fiber optic module **22"** support twenty-four (24) fibers, the fiber optic module **22"** can support up to ninety-six (96) fiber optic connections. Thus, in this example, if up to twelve (12) fiber optic modules **22"** are provided in the fiber optic equipment trays **20** of the chassis **12**, up to one thousand one hundred fifty-two (1152) fiber optic connections can be supported by the chassis **12** in a 1-U space. Further, in this example, the front opening **126** of the fiber optic module **22"** may support up to ninety-six (96) fiber optic connections in the width W_1 to support a fiber optic connection density of at least one fiber optic connection per 0.85 mm of width W_1 of the front opening **126**.

Further, with the above-described embodiment, providing at least five hundred seventy-six (576) duplex transmission and reception pairs in a 1-U space employing at least one twenty-four (24) fiber MPO fiber optic component can support a data rate of at least five thousand seven hundred sixty (5760) Gigabits per second in half-duplex mode in a 1-U space or at least eleven thousand five hundred twenty (11520) Gigabits per second in a 1-U space in full-duplex mode if employing a ten (10) Gigabit transceiver. This configuration can also support at least four thousand eight hundred (4800) Gigabits per second in half-duplex mode in a 1-U space and at least nine thousand six hundred (9600) Gigabits per second in full-duplex mode in a 1-U space, respectively, if employing a one hundred (100) Gigabit transceiver. This configuration can also support at least three thousand eight hundred forty (3840) Gigabits per second in half-duplex mode in a 1-U space and at least seven thousand six hundred eighty (7680) Gigabits per second in full-duplex mode in a 1-U space, respectively, if employing a forty (40) Gigabit transceiver. This configuration also supports a data rate of at least eight thousand six hundred forty two (8642) Gigabits per second in full-duplex mode in a 1-U space when employing a ten (10) Gigabit transceiver employing at least one twenty-four (24) fiber MPO fiber optic component, or four thousand three hundred twenty one (4321) Gigabits per second in full-duplex mode in a 1-U space when employing a ten (10) Gigabit transceiver employing at least one twenty-four (24) fiber MPO fiber optic component.

FIG. **16** illustrates an alternate fiber optic module **160** that may be provided in the fiber optic equipment trays **20** to support fiber optic connections and connection densities and bandwidths. FIG. **17** is a right front perspective view of the fiber optic module **160** of FIG. **16**. In this embodiment, the fiber optic module **160** is designed to fit across two sets of module rail guides **32**. A channel **162** is disposed through a center axis **164** of the fiber optic module **160** to receive a module rail guide **32** in the fiber optic equipment tray **20**. Module rails **165**A, **165**B, similar to the module rails **28**A, **28**B of the fiber optic module **22** of FIGS. **1-13**, are disposed on the inside the channel **162** of the fiber optic module **160** and configured to engage with tray channels **30** in the fiber optic equipment tray **20**. Module rails **166**A, **166**B, similar to the module rails **28**A, **28**B of the fiber optic module **22** of FIGS. **1-13**, are disposed on each side **168**, **170** of the fiber optic module **160** that are configured to engage with tray channels **30** in the fiber optic equipment tray **20**. The module rails **166**A, **166**B are configured to engage with tray channels **30** in a module rail guide **32** disposed between module rail guides **32** engaged with the module rail guides **32** disposed on the sides **168**, **170** of the fiber optic module **160**.

Up to twenty-four (24) fiber optic components **23** can be disposed in a front side **172** of the fiber optic module **160**. In this embodiment, the fiber optic components **23** are comprised of up to twelve (12) duplex LC fiber optic adapters, which are connected to one twenty-four (24) fiber MPO fiber optic connector **174** disposed in a rear end **176** of the fiber optic module **160**. Thus, with three (3) fiber optic equipment trays **20** disposed in the height of the chassis **12**, a total of six (6) fiber optic modules **160** can be supported in a given 1-U space. Supporting up to twenty-four (24) fiber optic connections per fiber optic module **160** equates to the chassis **12** supporting up to one hundred forty-four (144) fiber optic connections, or seventy-two (72) duplex channels, in a 1-U space in the chassis **12** (i.e., twenty-four (24) fiber optic connections X six (6) fiber optic modules **160** in a 1-U space). Thus, the chassis **12** is capable of supporting up to one hundred forty-four (144) fiber optic connections in a 1-U space by twenty-four (24) simplex or twelve (12) duplex fiber optic adapters being disposed in the fiber optic modules **160**. Supporting up to twenty (20) fiber optic connections per fiber optic module **160** equates to the chassis **12** supporting one hundred twenty (120) fiber optic connections, or sixty (60) duplex channels, in a 1-U space in the chassis **12** (i.e., twenty (20) fiber optic connections X six (6) fiber optic modules **160** in a 1-U space). Thus, the chassis **12** is also capable of supporting up to one hundred twenty (120) fiber optic connections in a 1-U space by twenty (20) simplex or ten (10) duplex fiber optic adapters being disposed in the fiber optic modules **160**.

FIG. **18** illustrates a front view of the fiber optic module **160** of FIGS. **16-17** without loaded fiber optic components **23** in the front side **172** to further illustrate the form factor of the fiber optic module **160** in this embodiment. Front openings **178**A, **178**B disposed on each side of the channel **162** are disposed through the front side **172** of a main body **180** of the fiber optic module **160** to receive the fiber optic components **23**. The widths W_1 and W_2 and the heights H_1 and H_2 are the same as in the fiber optic module **22** illustrated in FIG. **13**. Thus, in this embodiment, the widths W_1 of front openings **178**A, **178**B are designed to be at least eighty-five percent (85%) of the width W_2 of the front side **172** of the main body **180** of the fiber optic module **160**. The greater the percentage of the width W_1 to width W_2, the larger the area provided in the front openings **178**A, **178**B to receive fiber optic components **23** without increasing width W_2.

The width W_1 of the front openings **178**A, **178**B could each be designed to be greater than eighty-five percent (85%) of the width W_2 of the front side **172** of the main body **180** of the fiber optic module **160**. For example, the width W_1 could be designed to be between ninety percent (90%) and ninety-nine percent (99%) of the width W_2. As an example, the width W_1 could be less than ninety (90) mm. As another example, the width W_1 could be less than eighty-five (85) mm or less than eighty (80) mm. For example, width W_1 may be eighty-three (83) mm and width W_2 may be eighty-five (85) mm, for a ratio of width W_1 to width W_2 of 97.6%. In this example, the front openings **178**A, **178**B may support twelve (12) fiber optic connections in the widths W_1 to support a fiber optic connection density of at least one fiber optic connection per 7.0 mm of width W_1 of the front openings **178**A, **178**B. Further, each of the front openings **178**A, **178**B may support twelve (12) fiber optic connections in the widths W_1 to support a fiber

optic connection density of at least one fiber optic connection per 6.9 mm of width W_1 of the front openings **178**A, **178**B.

Further as illustrated in FIG. **18**, the height H_1 of front openings **178**A, **178**B could be designed to be at least ninety percent (90%) of the height H_2 of the front side **172** of the main body **180** of the fiber optic module **160**. In this manner, the front openings **178**A, **178**B have sufficient height to receive the fiber optic components **23**, while three (3) fiber optic modules **160** can be disposed in the height of a 1-U space. As an example, the height H_1 could be twelve (12) mm or less or ten (10) mm or less. As an example, the height H_1 could be ten (10) mm and height H_2 could be eleven (11) mm, for a ratio of height H_1 to height H_2 of 90.9%.

FIG. **19** illustrates another alternate fiber optic module **190** that may be provided in the fiber optic equipment trays **20** to support fiber optic connections and connection densities and bandwidths. FIG. **20** is a right front perspective view of the fiber optic module **190** of FIG. **19**. In this embodiment, the fiber optic module **190** is designed to fit across two sets of module rail guides **32**. A longitudinal receiver **192** is disposed through a center axis **194** and is configured to receive a module rail guide **32** in the fiber optic equipment tray **20** through an opening **193** in the receiver **192**. Module rails **195**A, **195**B, similar to the module rails **28**A, **28**B of the fiber optic module **22** of FIGS. **1-13**, are disposed on each side **198**, **200** of the fiber optic module **190** that are configured to engage with tray channels **30** in the fiber optic equipment tray **20**.

Up to twenty-four (24) fiber optic components **23** can be disposed in a front side **202** of the fiber optic module **190**. In this embodiment, the fiber optic components **23** are comprised of up to twelve (12) duplex LC fiber optic adapters, which are connected to one twenty-four (24) fiber MPO fiber optic connector **204** disposed in a rear end **206** of the fiber optic module **190**. Thus, with three (3) fiber optic equipment trays **20** disposed in the height of the chassis **12**, a total of six (6) fiber optic modules **190** can be supported in a given 1-U space. Supporting up to twenty-four (24) fiber optic connections per fiber optic module **190** equates to the chassis **12** supporting up to one hundred forty-four (144) fiber optic connections, or seventy-two (72) duplex channels, in a 1-U space in the chassis **12** (i.e., twenty-four (24) fiber optic connections X six (6) fiber optic modules **190** in a 1-U space). Thus, the chassis **12** is capable of supporting up to one hundred forty-four (144) fiber optic connections in a 1-U space by twenty (24) simplex or twelve (12) duplex fiber optic adapters being disposed in the fiber optic modules **190**. Supporting up to twenty-four (20) fiber optic connections per fiber optic module **190** equates to the chassis **12** supporting one hundred twenty (120) fiber optic connections, or sixty (60) duplex channels, in a 1-U space in the chassis **12** (i.e., twenty (20) fiber optic connections X six (6) fiber optic modules **190** in a 1-U space). Thus, the chassis **12** is also capable of supporting up to one hundred twenty (120) fiber optic connections in a 1-U space by twenty (20) simplex or ten (10) duplex fiber optic adapters being disposed in the fiber optic modules **190**.

FIG. **21** illustrates a front view of the fiber optic module **190** of FIGS. **19-20** without loaded fiber optic components **23** in the front side **202** to further illustrate the form factor of the fiber optic module **190**. Front openings **208**A, **208**B are disposed on each side of the receiver **192** and through the front side **202** of a main body **210** of the fiber optic module **190** to receive the fiber optic components **23**. The widths W_1 and W_2 and the heights H_1 and H_2 are the same as in the fiber optic module **22** as illustrated in FIG. **13**. Thus, in this embodiment, the width W_1 of front openings **208**A, **208**B is designed to be at least eighty-five percent (85%) of the width W_2 of the front side **202** of the main body **210** of the fiber optic module **190**. The greater the percentage of the width W_1 to width W_2, the larger the area provided in the front openings **208**A, **208**B to receive fiber optic components **23** without increasing the width W_2.

The width W_1 of front openings **208**A, **208**B could each be designed to be greater than eighty-five percent (85%) of the width W_2 of the front side **202** of the main body **210** of the fiber optic module **190**. For example, the width W_1 could be designed to be between ninety percent (90%) and ninety-nine percent (99%) of the width W_2. As an example, the width W_1 could be less than ninety (90) mm. As another example, the width W_1 could be less than eighty-five (85) mm or less than eighty (80) mm. For example, width W_1 may be eighty-three (83) mm and width W_2 may be eighty-five (85) mm, for a ratio of width W_1 to width W_2 of 97.6%. In this example, the front openings **208**A, **208**B may support twelve (12) fiber optic connections in the widths W_1 to support fiber optic connection density of at least one fiber optic connection per 7.0 mm of width W_1 of the front openings **208**A, **208**B. Further, each of the front openings **208**A, **208**B may support twelve (12) fiber optic connections in the widths W_1 to support a fiber optic connection density of at least one fiber optic connection per 6.9 mm of width W_1 of the front openings **208**A, **208**B.

Further as illustrated in FIG. **21**, the height H_1 of front openings **208**A, **208**B could be designed to be at least ninety percent (90%) of the height H_2 of the front side **202** of the main body **210** of the fiber optic module **190**. In this manner, the front openings **208**A, **208**B have sufficient height to receive the fiber optic components **23**, while three (3) fiber optic modules **190** can be disposed in the height of a 1-U space. As an example, the height H_1 could be twelve (12) mm or less or ten (10) mm or less. As an example, the height H_1 could be ten (10) mm and the height H_2 could be eleven (11) mm, for a ratio of height H_1 to height H_2 of 90.9%.

FIG. **22** illustrates another alternate fiber optic module **220** that may be provided in a fiber optic equipment tray **20'** to support a higher number of fiber optic connections and connection densities and bandwidths in a 1-U space. The fiber optic equipment tray **20'** in this embodiment is similar to the fiber optic equipment tray **20** previously discussed above; however, the fiber optic equipment tray **20'** only contains three (3) module rail guides **32** instead of five (5) module rail guides **32**. Thus, the fiber optic equipment tray **20'** only supports two fiber optic modules **220** across a 1-U width space. Thus, the fiber optic module **220** does not have to provide the channel **162** or receiver **192** of the fiber optic modules **160**, **190**, respectively, to be disposed within the fiber optic equipment tray **20'**. FIG. **23** is a right front perspective view of the fiber optic module **220** of FIG. **22**. The fiber optic module **220** is designed to fit across one set of module rail guides **32** in the fiber optic equipment tray **20'**. Module rails **225**A, **225**B, similar to the module rails **28**A, **28**B of the fiber optic module **22** of FIGS. **1-13**, are disposed on each side **228**, **230** of the fiber optic module **220** that are configured to engage with tray channels **30** in the fiber optic equipment tray **20'**, as illustrated in FIG. **22**.

Up to twenty-four (24) fiber optic components **23** can be disposed in a front side **232** of the fiber optic module **220**. In this embodiment, the fiber optic components **23** are comprised of up to twelve (12) duplex LC fiber optic adapters, which are connected to one twenty-four (24) fiber MPO fiber optic connector **234** disposed in a rear end **236** of the fiber optic module **220**. Thus, with three (3) fiber optic equipment trays **20'** disposed in the height of the chassis **12**, a total of six (6) fiber optic modules **220** can be supported in a given 1-U space. Supporting up to twenty-four (24) fiber optic connec-

tions per fiber optic module **220** equates to the chassis **12** supporting up to one hundred forty-four (144) fiber optic connections, or seventy-two (72) duplex channels, in a 1-U space in the chassis **12** (i.e., twenty-four (24) fiber optic connections X six (6) fiber optic modules **220** in a 1-U space). Thus, the chassis **12** is capable of supporting up to one hundred forty-four (144) fiber optic connections in a 1-U space by twenty (24) simplex or twelve (12) duplex fiber optic adapters being disposed in the fiber optic modules **220**. Supporting up to twenty (20) fiber optic connections per fiber optic module **220** equates to the chassis **12** supporting one hundred twenty (120) fiber optic connections, or sixty (60) duplex channels, in a 1-U space in the chassis **12** (i.e., twenty (20) fiber optic connections X six (6) fiber optic modules **220** in a 1-U space). Thus, the chassis **12** is also capable of supporting up to one hundred twenty (120) fiber optic connections in a 1-U space by twenty (20) simplex or ten (10) duplex fiber optic adapters being disposed in the fiber optic modules **220**.

FIG. **24** illustrates a front view of the fiber optic module **220** of FIGS. **22-23** without loaded fiber optic components **23** in the front side **232** to further illustrate the form factor of the fiber optic module **220** in this embodiment. A front opening **238** is through the front side **232** of a main body **240** of the fiber optic module **220** to receive the fiber optic components **23**. Width W_4 of the front opening **238** is about twice the width W_1 of the front opening **98** in the fiber optic module **22** illustrated in FIG. **13**. Width W_5 of the front side **232** is about one-hundred eighty-eight (188) millimeters, which is slightly greater than about twice the width W_3 of the fiber optic module **22** illustrated in FIG. **13**. The heights H_1 and H_2 are the same as in the fiber optic module **22** illustrated in FIG. **13**. Thus, in this embodiment, the width W_4 of the front opening **238** is designed to be at least eighty-five percent (85%) of the width W_5 of the front side **232** of the main body **240** of the fiber optic module **220**. The greater the percentage of the width W_4 to the width W_5, the larger the area provided in the front opening **238** to receive fiber optic components **23** without increasing the width W_4.

Width W_4 of the front opening **238** could be designed to be greater than eighty-five percent (85%) of the width W_5 of the front side **232** of the main body **240** of the fiber optic module **220**. For example, the width W_4 could be designed to be between ninety percent (90%) and ninety-nine percent (99%) of the width of W_5. As an example, the width W_4 could be less than one hundred eighty (180) mm. As another example, the width W_4 could be less than one hundred seventy (170) mm or less than one hundred sixty (160) mm. For example, width W_4 may be one hundred sixty-six (166) mm and width W_5 may be 171 millimeters, for a ratio of width W_4 to width W_5 of 166/171=97%. In this example, the front opening **238** may support twenty-four (24) fiber optic connections in the width W_4 to support a fiber optic connection density of at least one fiber optic connection per 7.0 mm of width W_4 of the front opening **238**. Further, the front opening **238** may support twenty-four (24) fiber optic connections in the width W_4 to support a fiber optic connection density of at least one fiber optic connection per 6.9 mm of width W_4 of the front opening **238**.

Further, as illustrated in FIG. **24**, the height H_1 of the front opening **238** could be designed to be at least ninety percent (90%) of the height H_2 of the front side **232** of the main body **240** of the fiber optic module **220**. In this manner, the front opening **238** has sufficient height to receive the fiber optic components **23**, while three (3) fiber optic modules **220** can be disposed in the height of a 1-U space. As an example, the height H_1 could be twelve (12) mm or less or ten (10) mm or less. As an example, the height H_1 could be ten (10) mm and height H_2 could be eleven (11) mm, for a ratio of height H_1 to height H_2 of 90.9%.

FIG. **25** illustrates another embodiment of fiber optic equipment **260** that can include fiber optic equipment trays previously described above and illustrated to support fiber optic modules. The fiber optic equipment **260** in this embodiment includes a 4-U sized chassis **262** configured to hold fiber optic equipment trays each supporting one or more fiber optic modules. The supported fiber optic equipment trays may be any of the fiber optic equipment trays **20**, **20'** previously described above and thus will not be described again here. The supported fiber optic modules may be any of the fiber optic modules **22**, **22'**, **22"**, **160**, **190**, **220** previously described above and thus will not be described again here. In this example, the chassis **262** is illustrated as supporting twelve (12) fiber optic equipment trays **20** each capable of supporting fiber optic modules **22**.

The tray guides **58** previously described are used in the chassis **262** to support tray rails **56** of the fiber optic equipment trays **20** therein and to allow each fiber optic equipment tray **20** to be independently extended out from and retracted back into the chassis **262**. A front door **264** is attached to the chassis **262** and is configured to close about the chassis **262** to secure the fiber optic equipment trays **20** contained in the chassis **262**. A cover **266** is also attached to the chassis **262** to secure the fiber optic equipment trays **20**. However, in the chassis **262**, up to twelve (12) fiber optic equipment trays **20** can be provided. However, the fiber optic connection densities and connection bandwidths are still the same per 1-U space. The fiber optic connection densities and connection bandwidth capabilities have been previously described and equally applicable for the chassis **4262** of FIG. **25**, and thus will not be described again here.

Thus, in summary, the table below summarizes some of the fiber optic connection densities and bandwidths that are possible to be provided in a 1-U and 4-U space employing the various embodiments of fiber optic modules, fiber optic equipment trays, and chassis described above. For example, two (2) optical fibers duplexed for one (1) transmission/reception pair can allow for a data rate of ten (10) Gigabits per second in half-duplex mode or twenty (20) Gigabits per second in full-duplex mode. As another example, eight (8) optical fibers in a twelve (12) fiber MPO fiber optic connector duplexed for four (4) transmission/reception pairs can allow for a data rate of forty (40) Gigabits per second in half-duplex mode or eighty (80) Gigabits per second in full-duplex mode. As another example, twenty optical fibers in a twenty-four (24) fiber MPO fiber optic connector duplexed for ten (10) transmission/reception pairs can allow for a data rate of one hundred (100) Gigabits per second in half-duplex mode or two hundred (200) Gigabits per second in full-duplex mode. Note that this table is exemplary and the embodiments disclosed herein are not limited to the fiber optic connection densities and bandwidths provided below.

Connector Type	Max Fibers per 1 RU	Max Fibers per 4 RU	Number of Connectors per 1 RU Space	Number of Connectors per 4 RU Space	Bandwidth per 1 U using 10 Gigabit Transceivers (duplex)	Bandwidth per 1 U using 40 Gigabit Transceivers (duplex)	Bandwidth per 1 U using 100 Gigabit Transceivers (duplex)
Duplexed LC	144	576	72	288	1,440 Gigabits/s.	960 Gigabits/s.	1,200 Gigabits/s.
12-F MPO	576	2,304	48	192	5,760 Gigabits/s.	3,840 Gigabits/s.	4,800 Gigabits/s.
24-F MPO	1,152	4,608	48	192	11,520 Gigabits/s.	7,680 Gigabits/s.	9,600 Gigabits/s.

Many modifications and other embodiments of the invention set forth herein will come to mind to one skilled in the art to which the invention pertains having the benefit of the teachings presented in the foregoing descriptions and the associated drawings. These modifications include, but are not limited to, number or type of fiber optic equipment, fiber optic module, fiber optic equipment tray, features included in the fiber optic equipment tray. Any size equipment, including but not limited to 1-U, 2-U and 4-U sizes may include some or all of the aforementioned features and fiber optic modules disclosed herein and some or all of their features. Further, the modifications are not limited to the type of fiber optic equipment tray or the means or device to support fiber optic modules installed in the fiber optic equipment trays. The fiber optic modules can include any fiber optic connection type, including but not limited to fiber optic connectors and adapters, and number of fiber optic connections, density, etc.

Further, as used herein, it is intended that the terms "fiber optic cables" and/or "optical fibers" include all types of single mode and multi-mode light waveguides, including one or more bare optical fibers, loose-tube optical fibers, tight-buffered optical fibers, ribbonized optical fibers, bend-insensitive optical fibers, or any other expedient of a medium for transmitting light signals.

Therefore, it is to be understood that the embodiments are not to be limited to the specific embodiments disclosed and that modifications and other embodiments are intended to be included within the scope of the appended claims. It is intended that the embodiments cover the modifications and variations of this invention provided they come within the scope of the appended claims and their equivalents. Although specific terms are employed herein, they are used in a generic and descriptive sense only and not for purposes of limitation.

What is claimed is:

1. A fiber optic module, comprising:

a main body defining an internal chamber disposed between a front side and a rear side;

a plurality of optical fibers disposed in the internal chamber;

a front opening disposed along a longitudinal axis in the front side;

a first plurality of fiber optic components optically connected to the plurality of optical fibers, the first plurality of fiber optic components disposed through the front opening; and

at least one second fiber optic component optically connected to at least one of the plurality of optical fibers to provide optical connection between the at least one second fiber optic component and at least one of the first plurality of fiber optic components;

wherein the width of the front opening is at least eighty-five percent (85%) of the width of the front side.

2. The fiber optic module of claim **1**, wherein the width of the front opening is between ninety percent (90%) and ninety-nine percent (99%) of the width of the front side.

3. The fiber optic module of claim **1**, wherein a height of the front opening is at least eighty-five percent (85%) of the height of the front side.

4. The fiber optic module of claim **1**, wherein a height of the front opening is at least ninety-five percent (95%) of the height of the front side.

5. The fiber optic module of claim **1**, wherein the at least one second fiber optic component is disposed through the rear side of the main body.

6. The fiber optic module of claim **1**, wherein the first plurality of fiber optic components is comprised of at least a first plurality of fiber optic connectors and a first plurality of fiber optic adapters.

7. The fiber optic module of claim **1**, wherein the first plurality of fiber optic components is comprised of first single fiber, fiber optic components.

8. The fiber optic module of claim **1**, wherein the plurality of optical fibers are further disposed in a fiber optic harness disposed in the internal chamber and connected to the first plurality of fiber optic components and the at least one second fiber optic component.

9. The fiber optic module of claim **8**, wherein the fiber optic harness is comprised of a plurality of optical fibers having a bend radius of forty millimeters or less.

10. The fiber optic module of claim **1**, further comprising at least one rail disposed on the main body.

11. The fiber optic module of claim **10**, further comprising at least one latch attached to the at least one rail and configured to engage the at least one rail.

12. The fiber optic module of claim **10** disposed in fiber optic equipment comprised from the group consisting of a fiber optic chassis and a fiber optic equipment drawer.

13. The fiber optic module of claim **1**, further including a fiber guide.

14. A fiber optic module, comprising:

a main body defining an internal chamber disposed between a front side and a rear side;

a plurality of optical fibers disposed in the internal chamber;

a front opening disposed along a longitudinal axis in the front side;

a first plurality of fiber optic components optically connected to the plurality of optical fibers, the first plurality of fiber optic components disposed through the front opening providing a fiber optic connection density of at least one fiber optic connection per 7.0 millimeters (mm) of width of the front opening; and

at least one second fiber optic component optically connected to at least one of the plurality of optical fibers to provide optical connection between the at least one second fiber optic component and at least one of the first plurality of fiber optic components.

15. The fiber optic module of claim **14**, wherein the first plurality of fiber optic components provides a fiber optic

connection density of at least one fiber optic connection per 6.9 mm of width of the front opening.

16. The fiber optic module of claim **14**, wherein the first plurality of fiber optic components provides a fiber optic connection density of at least one fiber optic connection per 1.7 mm of width of the front opening.

17. The fiber optic module of claim **14**, wherein the first plurality of fiber optic components provides a fiber optic connection density of at least one fiber optic connection per 0.85 mm of width of the front opening.

18. The fiber optic module of claim **14**, wherein the first plurality of fiber optic components is comprised of at least a first plurality of fiber optic connectors and a first plurality of fiber optic adapters.

19. The fiber optic module of claim **14**, wherein the first plurality of fiber optic components is comprised of first single fiber, fiber optic components.

20. The fiber optic module of claim **14**, wherein the plurality of optical fibers are further disposed in a fiber optic harness disposed in the internal chamber and connected to the first plurality of fiber optic components and the at least one second fiber optic component.

21. The fiber optic module of claim **20**, wherein the fiber optic harness is comprised of a plurality of optical fibers having a bend radius of 40 millimeters or less.

22. The fiber optic module of claim **14**, further comprising at least one rail disposed on the main body.

23. The fiber optic module of claim **22**, further comprising at least one latch attached to the at least one rail and configured to engage the at least one rail.

24. The fiber optic module of claim **14** disposed in fiber optic equipment comprised from the group consisting of a fiber optic chassis and a fiber optic equipment drawer.

25. The fiber optic module of claim **14**, further including a fiber guide.

26. A fiber optic module, comprising:

a main body defining an internal chamber disposed between a front side and a rear side;

a plurality of optical fibers disposed in the internal chamber;

a front opening disposed along a longitudinal axis in the front side; and

a first plurality of fiber optic components optically connected to the plurality of optical fibers, the first plurality of fiber optic components disposed through the front opening providing at least twelve (12) fiber optic connections;

wherein the width of the front opening is 90 mm or less; and

at least one second fiber optic component optically connected to at least one of the plurality of optical fibers to provide optical connection between the at least one second fiber optic component and at least one of the first plurality of fiber optic components.

27. The fiber optic module of claim **26**, wherein the width of the front opening is 85 mm or less.

28. The fiber optic module of claim **26**, wherein the width of the front opening is 80 mm or less.

29. The fiber optic module of claim **26**, wherein the height of the front opening is 12 mm or less.

30. The fiber optic module of claim **26**, wherein the height of the front opening is 10 mm or less.

31. The fiber optic module of claim **26**, wherein the first plurality of fiber optic components provides at least forty-eight (48) fiber optic connections.

32. The fiber optic module of claim **26**, wherein the first plurality of fiber optic components provides at least ninety-six (96) fiber optic connections.

33. The fiber optic module of claim **26**, wherein the first plurality of fiber optic components is comprised of at least a first plurality of fiber optic connectors and a first plurality of fiber optic adapters.

34. The fiber optic module of claim **26**, wherein the first plurality of fiber optic components is comprised of first single fiber, fiber optic components.

35. The fiber optic module of claim **26**, wherein the plurality of optical fibers are further disposed in a fiber optic harness disposed in the internal chamber and connected to the first plurality of fiber optic components and the at least one second fiber optic component.

36. The fiber optic module of claim **35**, wherein the fiber optic harness is comprised of a plurality of optical fibers having a bend radius of 40 millimeters or less.

37. The fiber optic module of claim **26**, further comprising at least one rail disposed on the main body.

38. The fiber optic module of claim **37**, further comprising at least one latch attached to the at least one rail and configured to engage the at least one rail.

39. The fiber optic module of claim **26** disposed in fiber optic equipment comprised from the group consisting of a fiber optic chassis and a fiber optic equipment drawer.

40. The fiber optic module of claim **26**, further including a fiber guide.

41. A fiber optic module housing, comprising:

a main body defining an internal chamber disposed between a front side and a rear side; and

a plurality of optical fibers disposed in the internal chamber;

a front opening disposed along a longitudinal axis in the front side and configured to receive a first plurality of fiber optic components optically connected to the plurality of optical fibers;

wherein the width of the front opening is at least eighty-five percent (85%) of the width of the front side; and

at least one second fiber optic component optically connected to at least one of the plurality of optical fibers to provide optical connection between the at least one second fiber optic component and at least one of the first plurality of fiber optic components.

42. The fiber optic module housing of claim **41**, wherein the width of the front opening is between ninety percent (90%) and ninety-nine percent (99%) of the width of the front side.

43. The fiber optic module housing of claim **41**, wherein the height of the front opening is at least eighty-five percent (85%) of the height of the front side.

44. The fiber optic module housing of claim **41**, wherein the height of the front opening is at least ninety percent (90%) of the height of the front side.

45. The fiber optic module of claim **41**, further including a fiber guide.

46. A fiber optic module housing, comprising:

a main body defining an internal chamber disposed between a front side and a rear side, the internal chamber configured to support a plurality of optical fibers disposed therein; and

a front opening disposed along a longitudinal axis in the front side and configured to support a first plurality of fiber optic components having a fiber optic connection density of at least one fiber optic connection per 7.0 millimeters (mm) of width of the front opening; and

the main body further configured to support at least one second fiber optic component optically connected to at least one of the plurality of optical fibers to provide optical connection between the at least one second fiber optic component and at least one of the first plurality of fiber optic components.

47. The fiber optic module housing of claim **46**, wherein the front opening supports the fiber optic connection density of at least one fiber optic connection per 6.9 mm of width of the front opening.

48. A fiber optic module housing, comprising:

a main body defining an internal chamber disposed between a front side and a rear side; and

a front opening disposed along a longitudinal axis in the front side and configured to support at least twelve (12) first fiber optic connections to at least twelve (12) optical fibers;

wherein the width of the front opening is 90 mm or less; and

wherein the main body is further configured to support at least one second fiber optic connection optically connected to the at least twelve (12) optical fibers to provide at least twelve (12) optical connections between the at least one second fiber optic component and the at least twelve (12) first fiber optic connections.

49. The fiber optic module housing of claim **48**, wherein the width of the front opening is 80 mm or less.

50. The fiber optic module housing of claim **48**, wherein the height of the front opening is 12 mm or less.

51. The fiber optic module housing of claim **48**, wherein the height of the front opening is 10 mm or less.

52. A fiber optic module, comprising:

a main body defining an internal chamber disposed between a front side and a rear side, wherein the front side has a width;

a plurality of optical fibers disposed in the internal chamber;

a first plurality of fiber optic components optically connected to the plurality of optical fibers, the first plurality of fiber optic components disposed though at least eighty-five percent (85%) of the width of the front side; and

at least one second fiber optic component optically connected to at least one of the plurality of optical fibers to provide optical connection between the at least one second fiber optic component and at least one of the first plurality of fiber optic components.

53. The fiber optic module of claim **52**, wherein the width of the front opening is between ninety percent (90%) and ninety-nine percent (99%) of the width of the front side.

54. The fiber optic module of claim **52**, wherein a height of the front opening is at least eighty-five percent (85%) of the height of the front side.

55. The fiber optic module of claim **52**, wherein the at least one second fiber optic component is disposed through the rear side of the main body.

56. The fiber optic module of claim **52**, wherein the first plurality of fiber optic components is comprised of at least a first plurality of fiber optic connectors and a first plurality of fiber optic adapters.

57. The fiber optic module of claim **52**, wherein the first plurality of fiber optic components is comprised of first single fiber, fiber optic components.

58. The fiber optic module of claim **52**, wherein the plurality of optical fibers are further disposed in a fiber optic harness disposed in the internal chamber and connected to the first plurality of fiber optic components and the at least one second fiber optic component.

59. The fiber optic module of claim **52**, further comprising at least one rail disposed on the main body.

60. The fiber optic module of claim **59**, further comprising at least one latch attached to the at least one rail and configured to engage the at least one rail.

61. The fiber optic module of claim **59** disposed in fiber optic equipment comprised from the group consisting of a fiber optic chassis and a fiber optic equipment drawer.

62. The fiber optic module of claim **52**, further including a fiber guide.

63. A fiber optic module, comprising:

a main body defining an internal chamber disposed between a front side and a rear side, wherein the front side has a width;

a plurality of optical fibers disposed in the internal chamber;

front openings having a width being at least eighty-five percent (85%) of the width of the front side of the main body;

a first plurality of fiber optic components optically connected to the plurality of optical fibers, the fiber optic components disposed through the front openings; and

at least one second fiber optic component optically connected to at least one of the plurality of optical fibers to provide optical connection between the at least one second fiber optic component and at least one of the first plurality of fiber optic components.

64. The fiber optic module of claim **63**, wherein the width of the front openings being between ninety percent (90%) and ninety-nine percent (99%) of the width of the front side.

65. The fiber optic module of claim **63**, wherein a height of the front openings is at least eighty-five percent (855) of the height of the front side.

66. The fiber optic module of claim **63**, wherein the at least one second fiber optic component is disposed through the rear side of the main body.

67. The fiber optic module of claim **63**, wherein the first plurality of fiber optic components is comprised of at least a first plurality of fiber optic connectors and a first plurality of fiber optic adapters.

68. The fiber optic module of claim **63**, wherein the first plurality of fiber optic components is comprised of first single fiber, fiber optic components.

69. The fiber optic module of claim **63**, wherein the plurality of optical fibers are further disposed in a fiber optic harness disposed in the internal chamber and connected to the first plurality of fiber optic components and the at least one second fiber optic component.

70. The fiber optic module of claim **63**, further comprising at least one rail disposed on the main body.

71. The fiber optic module of claim **70**, further comprising at least one latch attached to the at least one rail and configured to engage the at least one rail.

72. The fiber optic module of claim **70** disposed in fiber optic equipment comprised from the group consisting of a fiber optic chassis and a fiber optic equipment drawer.

73. The fiber optic module of claim **63**, further including a fiber guide.

* * * * *