US011435542B2

(12) **United States Patent**
Pilon

(10) **Patent No.: US 11,435,542 B2**
(45) **Date of Patent: Sep. 6, 2022**

(54) **MODULAR FIBER OPTIC CASSETTE, SYSTEM AND METHOD**

(71) Applicant: **BELDEN CANADA ULC**, Saint-Laurent (CA)

(72) Inventor: **Vincent Pilon**, Lachine (CA)

(73) Assignee: **BELDEN CANADA ULC**

(*) Notice: Subject to any disclaimer, the term of this patent is extended or adjusted under 35 U.S.C. 154(b) by 0 days.

(21) Appl. No.: **17/010,113**

(22) Filed: **Sep. 2, 2020**

(65) **Prior Publication Data**

US 2020/0400908 A1 Dec. 24, 2020

Related U.S. Application Data

(63) Continuation of application No. 16/143,831, filed on Sep. 27, 2018, now Pat. No. 10,795,107.

(60) Provisional application No. 62/567,339, filed on Oct. 3, 2017.

(51) **Int. Cl.**
G02B 6/44 (2006.01)
G02B 6/46 (2006.01)

(52) **U.S. Cl.**
CPC ***G02B 6/4455*** (2013.01); ***G02B 6/46*** (2013.01)

(58) **Field of Classification Search**
None
See application file for complete search history.

(56) **References Cited**

U.S. PATENT DOCUMENTS

4,792,203	A	12/1988	Nelson et al.	
7,331,722	B2	2/2008	Tan	
7,509,015	B2	5/2009	Murano	
8,913,866	B2	12/2014	Cote et al.	
9,008,485	B2	4/2015	Ramirez et al.	
9,075,216	B2	7/2015	Cote et al.	
9,690,064	B2 *	6/2017	Sauter	G02B 6/4455
10,215,944	B2	2/2019	Sedor et al.	
10,281,672	B1	5/2019	Mullsteff	
10,359,595	B2 *	7/2019	Aramayo	G02B 6/4455
10,514,518	B1	12/2019	Livingston et al.	
10,598,884	B2 *	3/2020	Fontaine	G02B 6/4455
10,656,359	B2 *	5/2020	Fontaine	G02B 6/3825
10,768,387	B2 *	9/2020	Pilon	G02B 6/4455
10,795,107	B2 *	10/2020	Pilon	G02B 6/46
11,187,864	B2 *	11/2021	Crawford	G02B 6/447
2002/0131730	A1 *	9/2002	Keeble	G02B 6/4246 385/88
2007/0131628	A1	6/2007	Mimlitch	

(Continued)

Primary Examiner — Rhonda S Peace
(74) *Attorney, Agent, or Firm* — Lavery, De Billy, LLP; Hugh Mansfield

(57) **ABSTRACT**

A fiber optic cassette system is disclosed comprising a case defining a tray receiving space and an opening to a space, a tray received within the case for movement between a stored position wherein the tray is inside the case and an accessible position wherein a front end of the tray is in front of the opening and outside of the case, fiber optic cassettes arrangeable side by side along the tray front end, a first of the cassettes comprising a width of one of one, two, three, four or six standard width units and a second of the cassettes comprising a width different from the first cassette width and one of one, two, three, four or six standard width units, and a fastener for removeably the cassettes to the tray. When arranged on the tray each of said selected cassettes is directly adjacent at least one other selected cassette.

13 Claims, 13 Drawing Sheets

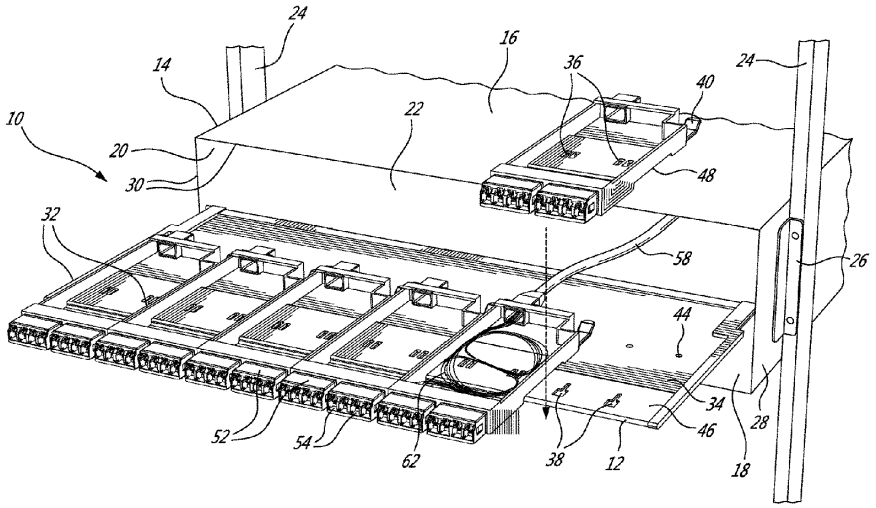

CommScope Ex. 1034

(56) **References Cited**

U.S. PATENT DOCUMENTS

2009/0290842	A1	11/2009	Bran de Leon et al.	
2016/0033732	A1	2/2016	Giraud et al.	
2016/0062050	A1	3/2016	Giraud et al.	
2016/0062068	A1*	3/2016	Giraud	G02B 6/3885 385/135
2018/0003912	A1*	1/2018	Sedor	G02B 6/4452
2019/0004268	A1	1/2019	Vogel	
2019/0101717	A1	4/2019	Pilon	
2019/0107682	A1	4/2019	Aramayo et al.	
2019/0162924	A1	5/2019	Fontaine et al.	
2019/0187394	A1	6/2019	Fontaine et al.	
2020/0131730	A1	4/2020	Spiro	

* cited by examiner

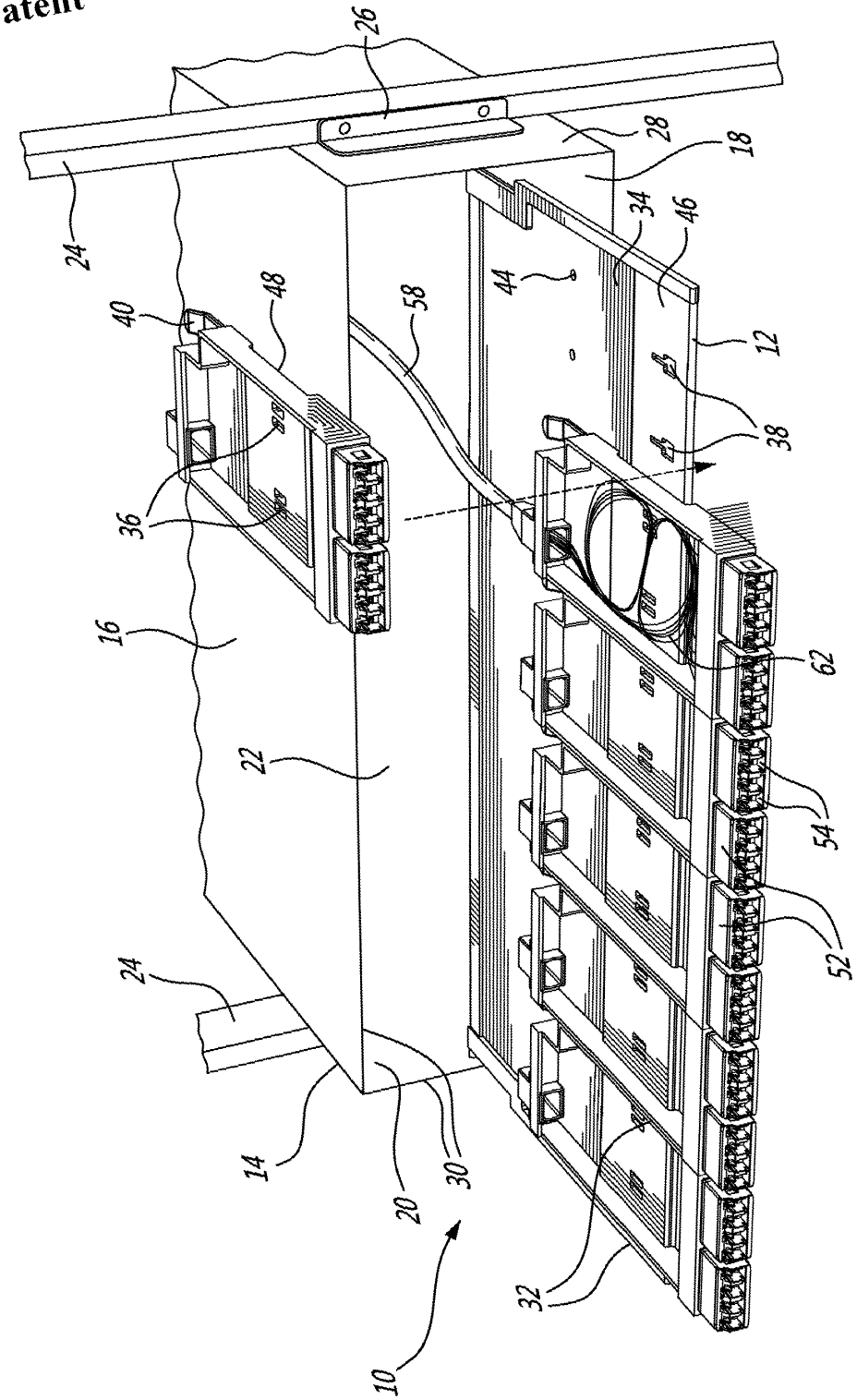

FIG. 1

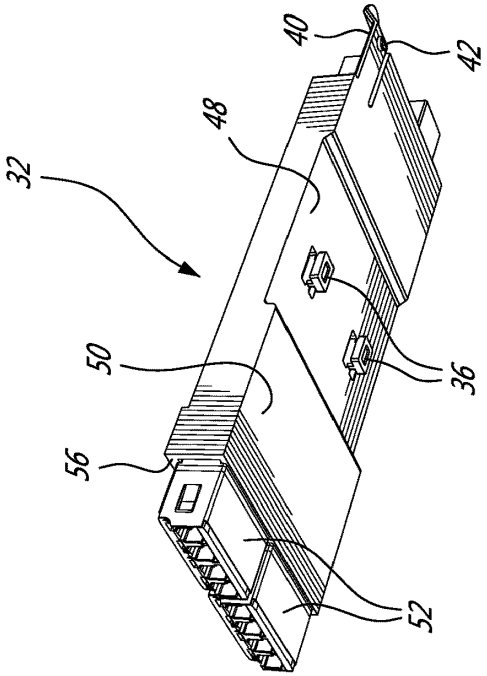

FIG. 2B

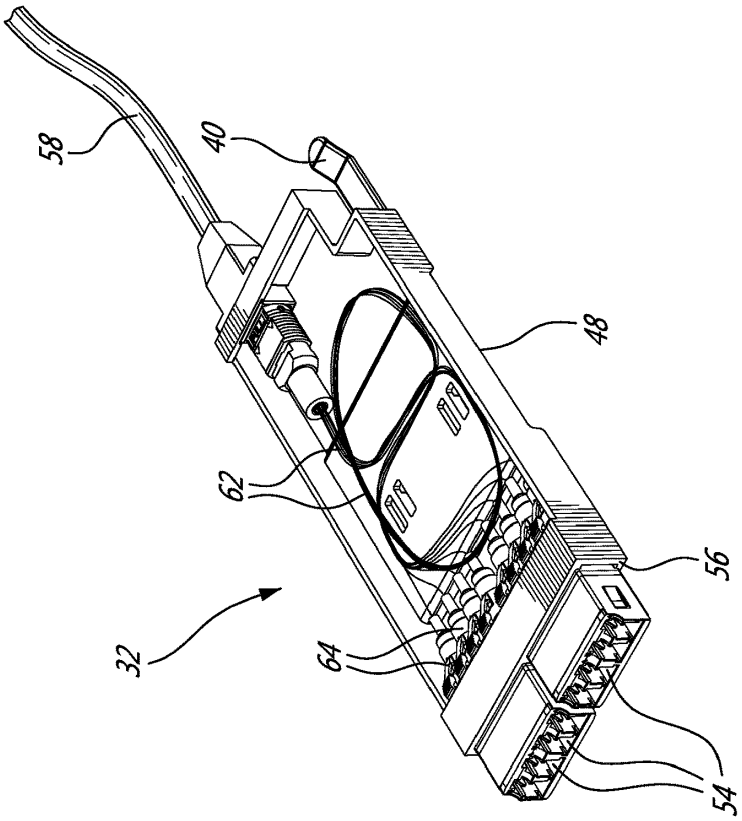

FIG. 2A

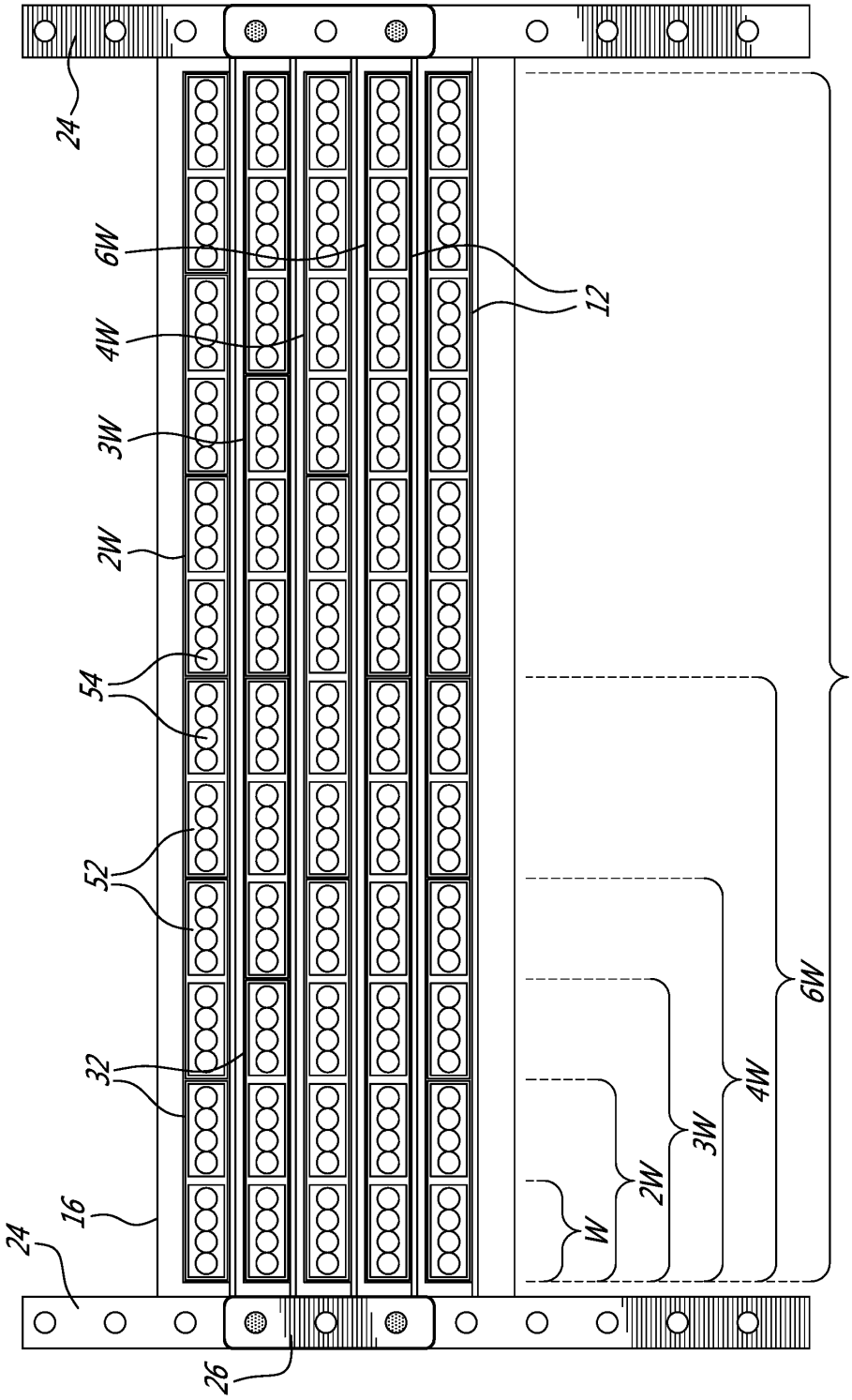

FIG. 3

CommScope Ex. 1034

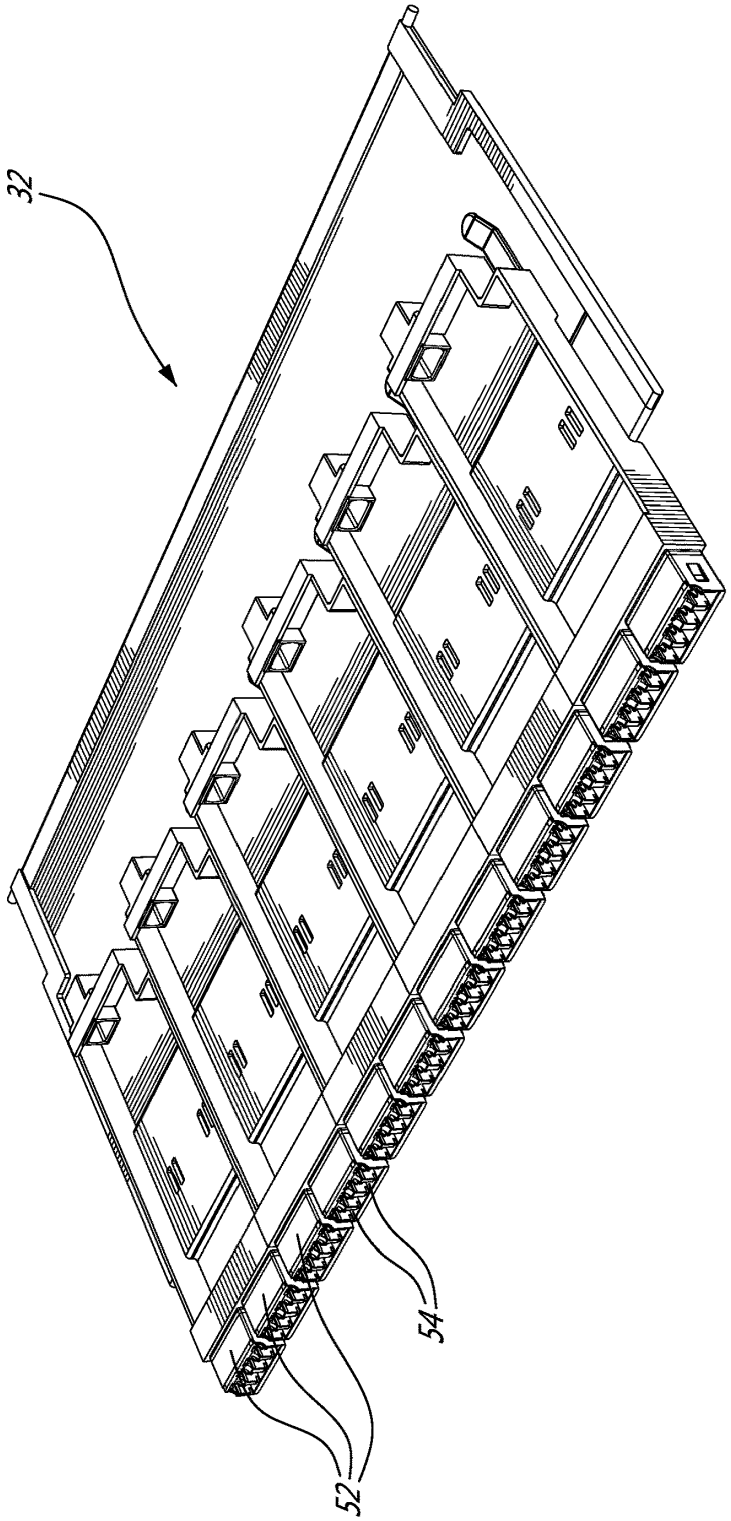

FIG. 4A

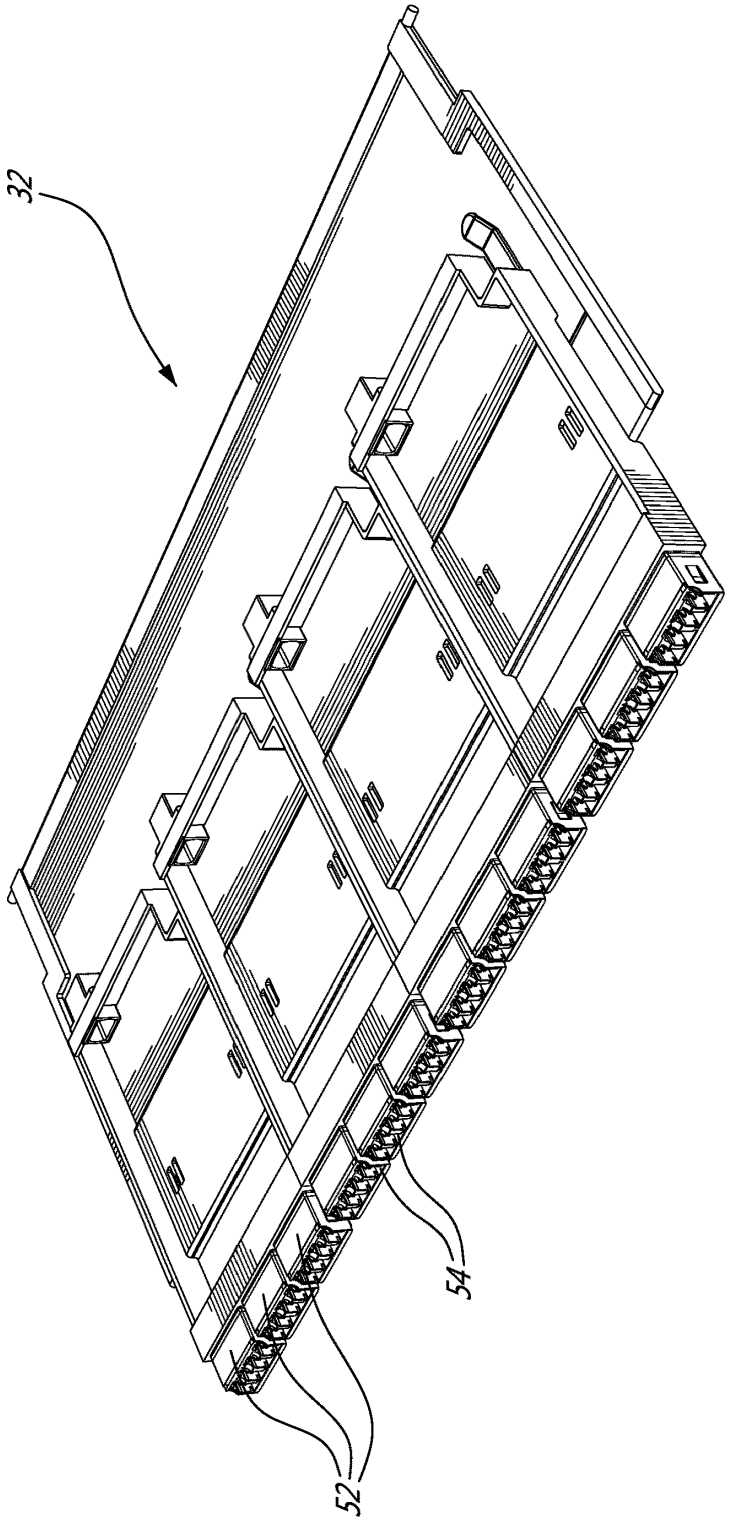

FIG. 4B

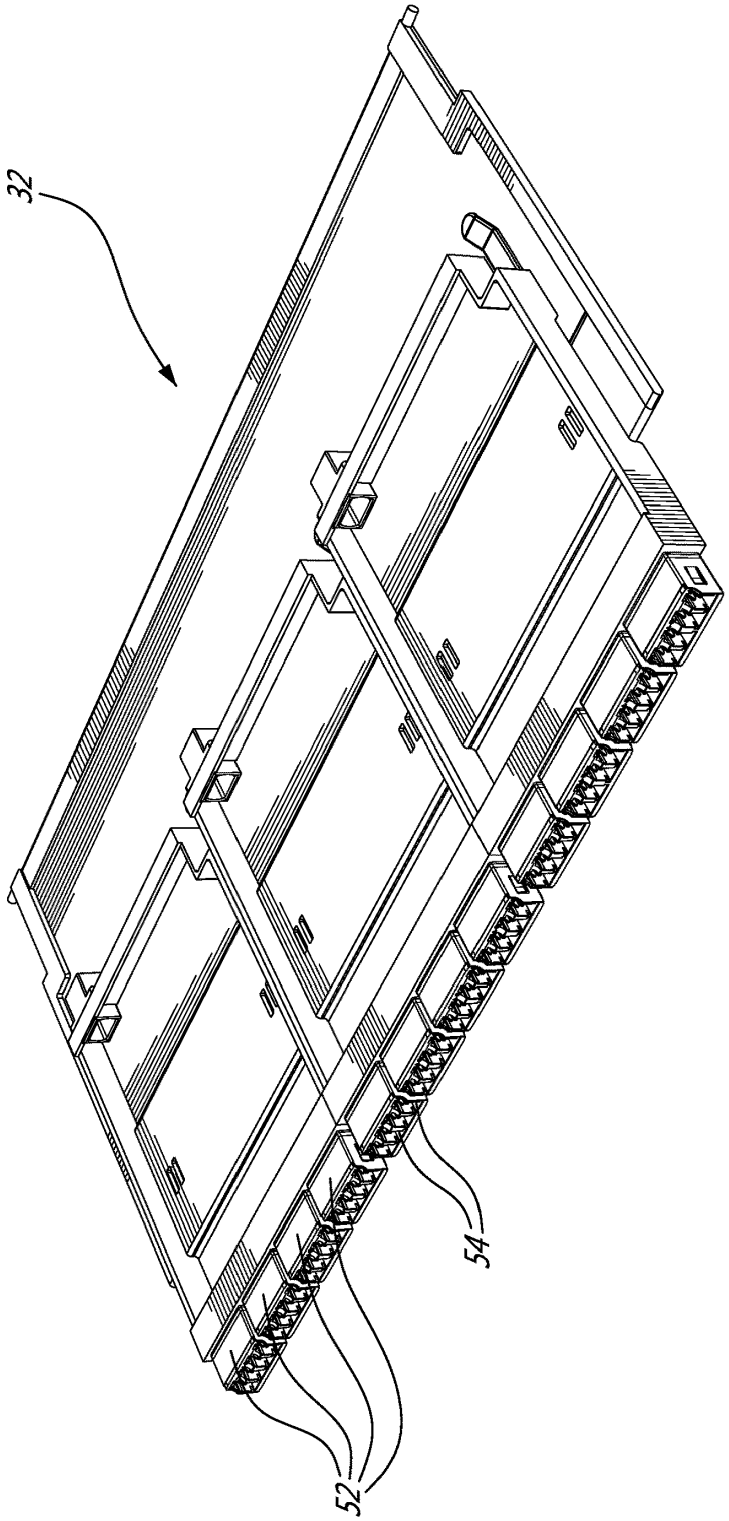

FIG. 4C

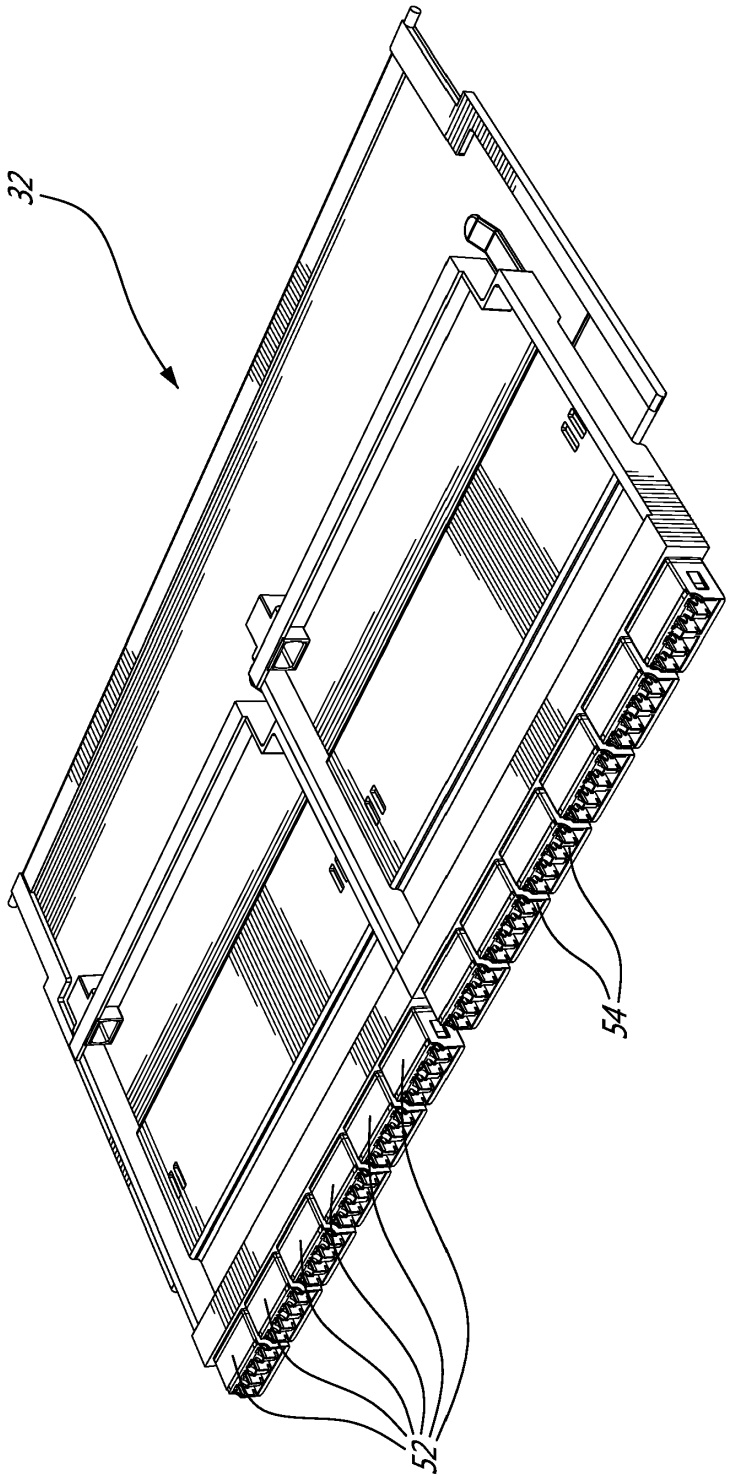

FIG. 4D

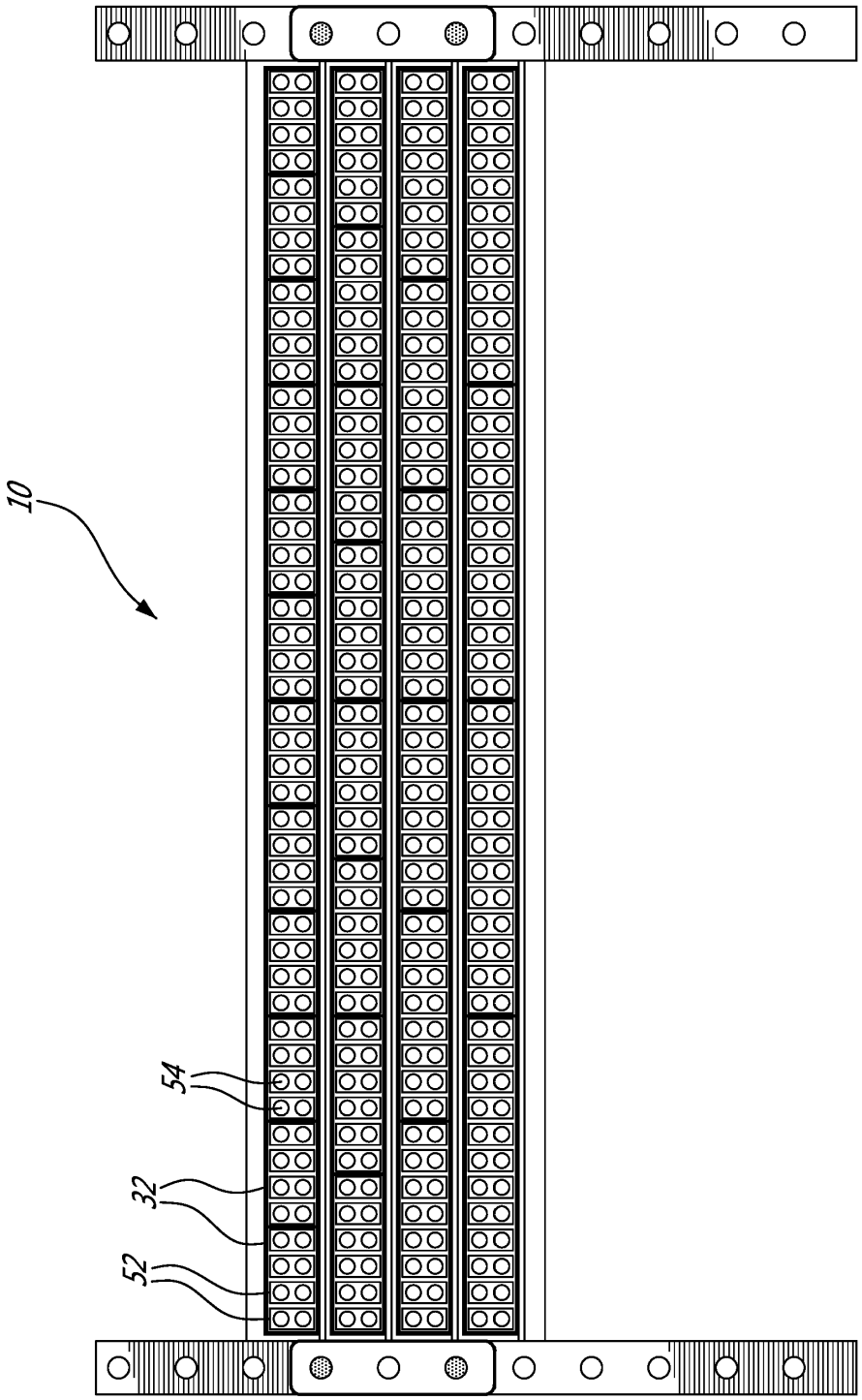

FIG. 5A

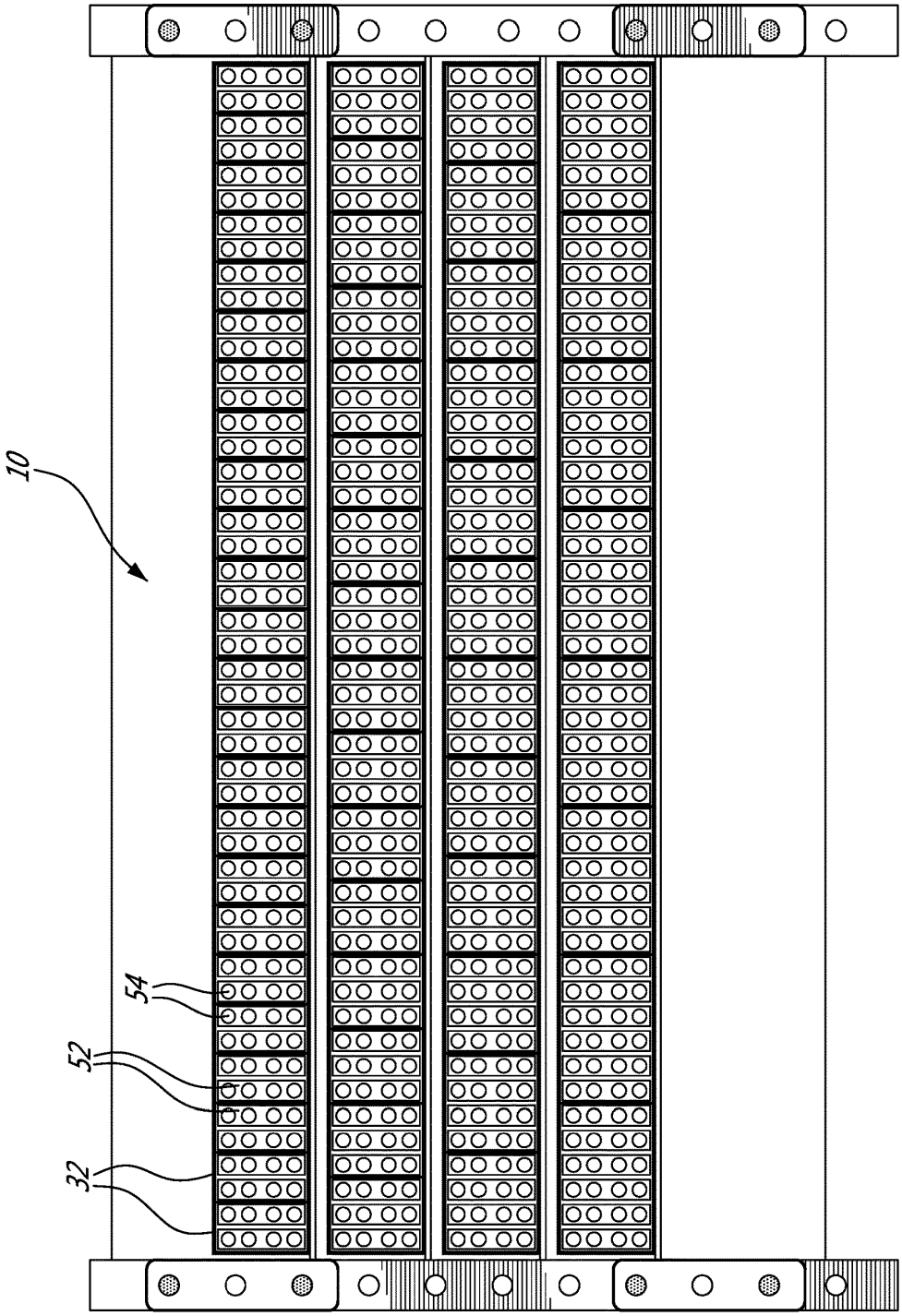

FIG. 5B

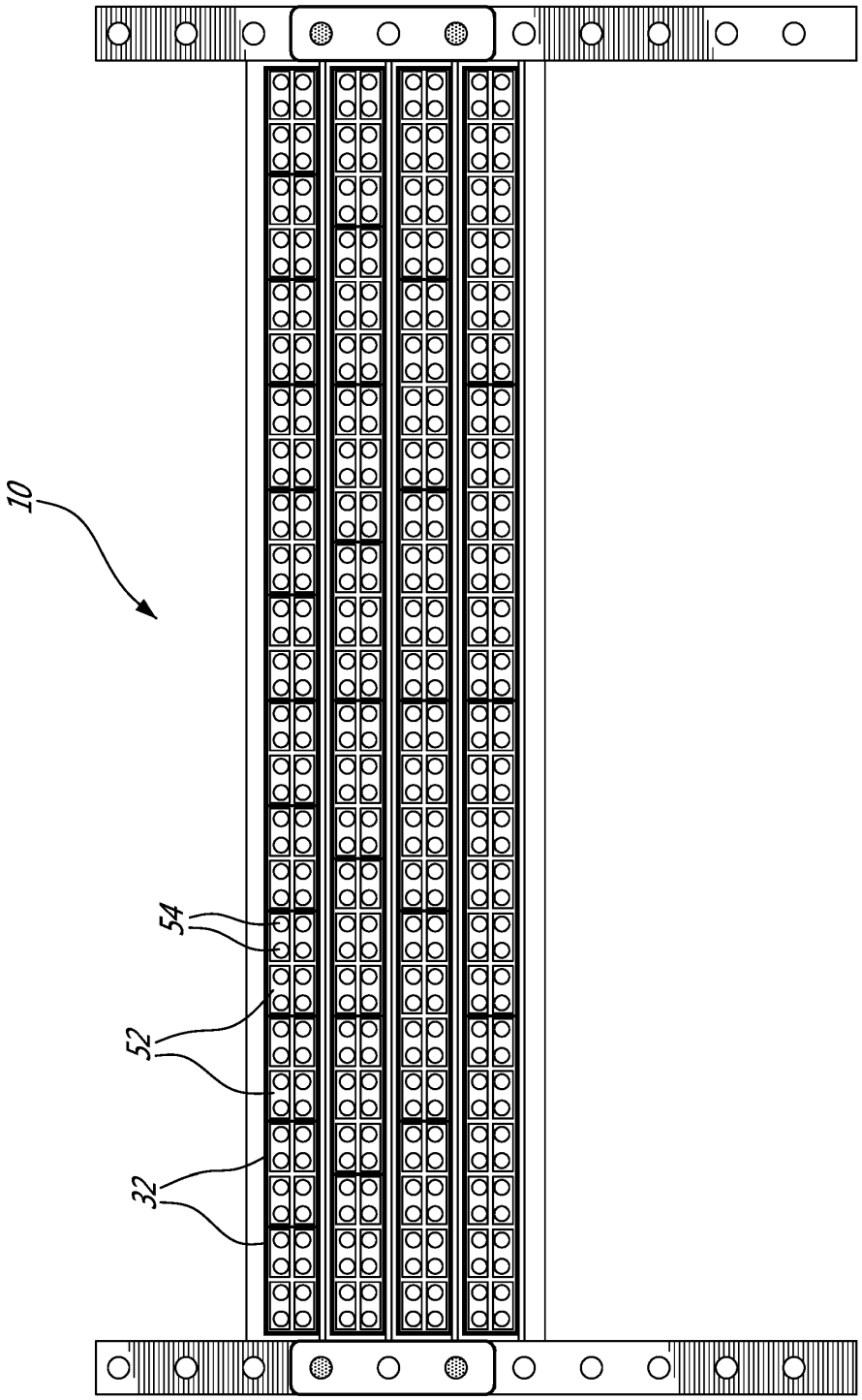

FIG. 5C

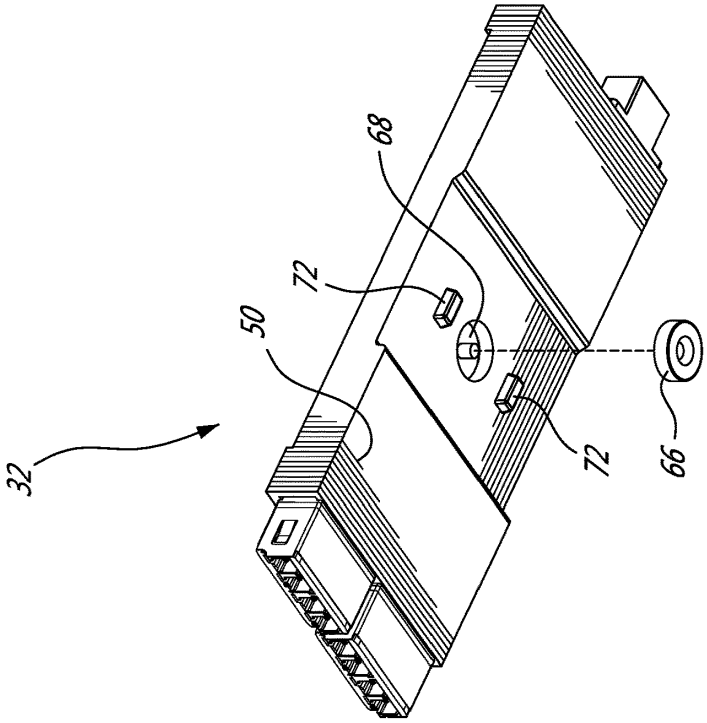

FIG. 6B

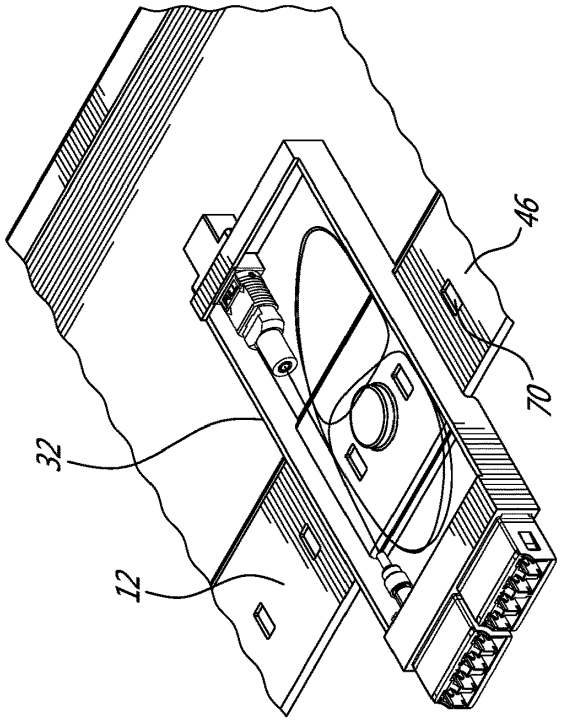

FIG. 6A

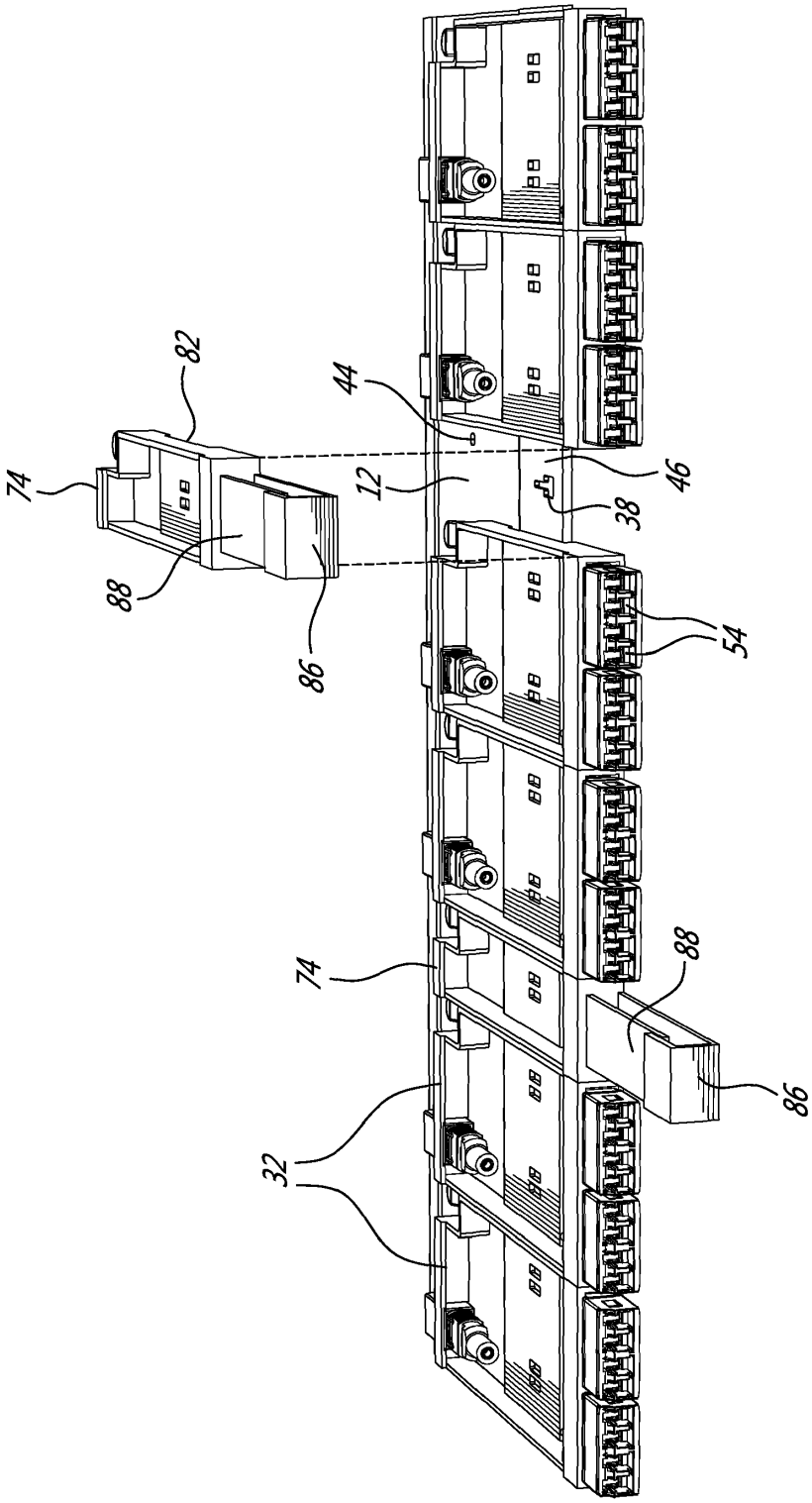

FIG. 7A

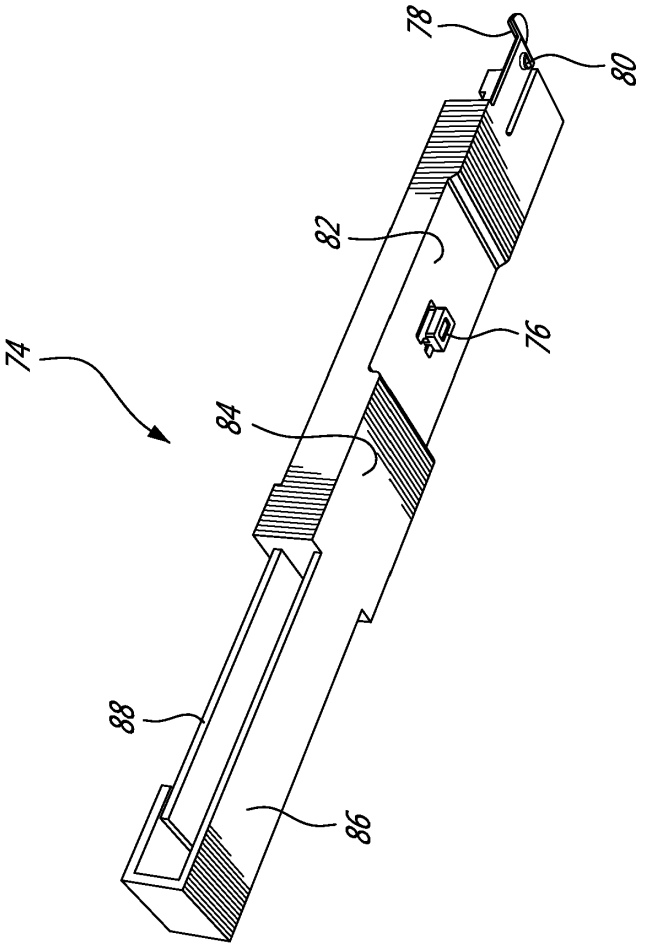

FIG. 7B

MODULAR FIBER OPTIC CASSETTE, SYSTEM AND METHOD

CROSS REFERENCE TO RELATED APPLICATIONS

This application is a continuation application of U.S. patent application Ser. No. 16/143,831 filed on Sep. 27, 2018 and claims priority under 35 USC § 119(e) of U.S. provisional application Ser. No. 62/567,339 filed on Oct. 3, 2017 which is incorporated herein in its entirely by reference.

FIELD OF THE INVENTION

The present invention relates to a modular fiber optic cassette, system and method. In particular, the present invention relates to a fiber optic cassette comprising a width of one or more standard width units and such that fiber optic cassettes of different widths can be arranged on the same tray while optimizing the use of tray space.

BACKGROUND OF THE INVENTION

The prior art discloses fiber optic cassettes or splice boxes for use in terminating fiber optic trunk cables and splitting them out to patch cables which are removeably arranged on tray systems within a rack mounted case. One drawback of these cassettes and tray systems is that they are typically preconfigured to terminate fiber optic cables comprising a single predetermined number of optic fibers. Another drawback is that cassettes which are used to terminate fiber optic cables comprising different numbers of optic fibers are generally incompatible with one another and additionally require trays with different spacing, securing mechanisms and the like.

SUMMARY OF THE INVENTION

In order to address the above and other drawbacks there is provided a modular fiber optic cassette system. The system comprises a case comprising a top and a bottom wall and two opposed side walls, each of the sidewalls attached between respective side edges of the top and bottom wall, the walls together defining a tray receiving space there between and a forward edge of each the wall together defining an opening to the tray receiving space, at least one tray slideably received within the tray receiving space for movement between a stored position wherein the tray is completely inside the tray receiving space and an accessible position wherein a front end of the tray is in front of the opening and outside of the tray receiving space, a set of fiber optic cassettes, a selected plurality of the cassettes arrangeable side by side along the tray front end wherein each of the cassettes comprises a plurality of optic plug receiving receptacles arranged side by side in a row along a front thereof, a first of the set of cassettes comprising a first cassette width of one of one, two, three, four and six standard width units and a second of the cassettes comprising a second cassette width different from the first cassette width and one of one, two, three, four and six standard width units, and a fastener for removeably securing each of the cassettes to the tray. When arranged on the tray each of said selected cassettes is directly adjacent at least one other selected cassette.

Additionally, there is provided a method for organising a tray comprising a front edge in a fiber optic interconnect system. The method comprises defining a standard width unit wherein a width of the front edge is substantially evenly divisible by the standard width unit, selecting a plurality of cassettes for installation on the tray from a set of cassettes having a plurality of different widths, wherein each of the different widths is evenly divisible by the standard width unit, and releasably securing the selected cassettes along the front edge of the tray. When arranged on the tray each of said selected cassettes is directly adjacent at least one other selected cassette.

BRIEF DESCRIPTION OF THE DRAWINGS

FIG. **1** provides a right front perspective view of a modular fiber optic cassette and system mounted in a rack and in accordance with an illustrative embodiment of the present invention;

FIGS. **2**A and **2**B provide respectively a raised right front perspective view and a lowered right front perspective view of a modular fiber optic cassette in accordance with an illustrative embodiment of the present invention;

FIG. **3** provides a front plan view of a modular fiber optic cassette system mounted in a rack in accordance with an illustrative embodiment of the present invention;

FIGS. **4**A through **4**D provide raised right front perspective views of a tray populated with respectively six (6), four (4), three (3) and two (2) cassettes of different widths;

FIGS. **5**A, **5**B and **5**C provide front plan views of a modular fiber optic cassette and system mounted in a rack respectively in accordance with first, second and third alternative embodiments of the present invention;

FIGS. **6**A and **6**B provide respectively a raised right front perspective view and a lowered right front perspective view of a modular fiber optic cassette in accordance with an alternative illustrative embodiment of the present invention; and

FIGS. **7**A and **7**B provide respectively a raised right front perspective view of a tray comprising a plurality modular fiber optic cassettes and a pair of cable management brackets and lowered right front perspective view of a cable management bracket in accordance with a second alternative illustrative embodiment of the present invention.

DETAILED DESCRIPTION OF THE ILLUSTRATIVE EMBODIMENTS

Referring now to FIG. **1**, a modular cassette system, generally referred to using the reference numeral **10**, will now be described. The modular cassette comprises a slideable tray **12** illustratively mounted within a case **14**. The case **14** comprises a top wall **16**, a bottom wall **18** and a pair of opposed side walls **20** defining a tray receiving space **22** therebetween. The case **14** is illustratively mounted to the rails **24** of a rack via a pair of mounting brackets **26** wherein one of the brackets **26** is attached to an outer surface **28** of a respective one of the sidewalls **20**. The front edges **30** of the walls **16**, **18**, **20** define an opening via which the tray receiving space **22** can be accessed. In a particular illustrated embodiment the system **10** is shown for mounting in a **19"** rack, however in a particular embodiment the system **10**, with suitable modifications, may be mounted equally in a cross connect system, fiber bay or wall mount or the like.

Referring to FIGS. **2**A and **2**B in addition to FIG. **1**, the tray **12** receives a plurality of removable fiber optic module or cassettes **32** arranged side by side on an upper surface **34** thereof. In a first embodiment each fiber optic cassette **32** is secured to the tray **12** using a fastener comprising tabs **36** of inverted "T" cross section which engage with respective slots **38** machined or otherwise formed in the tray **12**. A

flexible tab **40** is also provided which comprises a boss **42** that engages a respective aperture **44** machined or otherwise formed in the tray **12** when the tabs **36** are engaged within their respective slots **38**, thereby releasably securing the cassette **32** to the tray **12**. In order to better orient the cassette **36** on the tray during installation, the tray **12** comprises a raised shoulder **46** which is received within a channel **48** moulded or otherwise formed in an underside **50** of the cassette **32**.

Still referring to FIGS. **2**A and **2**B, each cassette **32** illustratively comprises a plurality of receptacle modules **52** each comprising a plurality of receptacles **54**, illustratively LC Quad type receptacles, arranged in a row and exposed along a forward edge **56** of the cassette **32**. The cassette **32** also illustratively terminates a fiber optic cable **58**, such as a trunk cable or the like, comprising a plurality of optic fibers at a multi-fiber connector receiving receptacle **60** on a rearward edge. Each optic fiber of the fiber optic cable **58** is interconnected with a respective one of the receptacles **54** using an optic fiber segment **62** comprising a receptacle end which is terminated by a plug **64**. The segments **62**, which are typically longer than the distance between the forward edge and the rearward edge, are typically looped several times within the cassette **32**, for example in a serpentine or the like. A person of ordinary skill in the art will understand that an optic fiber terminated with a plug (not shown) inserted into a selected one of the receptacles **54** will interconnect the optic fiber with a selected optic fiber segment **62**.

Referring now to FIG. **3** and FIGS. **4**A through **4**D, as discussed above, each cassette **32** illustratively comprises a plurality of receptacle modules **52** each comprising four (4) receptacles **54**. It is foreseen to provide a set of four (4) different cassette sizes to accommodate terminating fiber optic cables comprising different number of optic fibers. Each of the different cassette sizes of the set is based on an integer multiple of a standardised pitch or width unit W wherein one standardized width unit accommodates a single receptacle module **52** comprising four (4) receptacles **54**. Illustratively, a 2W cassette **32** comprising two (2) modules **52** accommodating eight (8) optic fibers (FIG. **4**A) is provided, a 3W cassette **32** comprising three (3) modules **52** accommodating twelve (12) optic fibers (FIG. **4**B) is provided, a 4W cassette **32** comprising four (4) modules **52** accommodating sixteen (16) optic fibers (FIG. **4**C) is provided and a 6W cassette **32** comprising six (6) modules **52** accommodating twenty-four (24) optic fibers (FIG. **4**D) is provided for. The 2W, 3W, 4W and 6W cassettes **32** are typically used only with like cassettes **32** as illustrated and such that respectively six (6), four (4), three (3) and two (2) cassettes fit snuggly side by side on the 12W tray, although in a particular embodiment cassettes **32** of different widths could be used together.

Although the present illustrative embodiment In a particular embodiment the pitch/width W is based on a LC Quad (SC Duplex) technology footprint comprising four (4) connectors, in an alternative embodiment the pitch/width W could be based on a different technology footprint, including SC Duplex comprising two (2) connectors and MPO type connectors comprising inter alia multiple optic fibers such as MPO-12, MPO-16 and MPO-24.

Still referring to FIGS. **3**, **4**A through **4**D in addition to FIG. **1**, a person of ordinary skill in the art will now understand that the disclosed system of cassettes **32** can be used to accommodate optic fiber cables **58** comprising different numbers of optic fibers **62** while ensuring that the same number of optic fibers **62** are accessible via the exposed receptacles **54**.

Referring back to FIG. **1**, the spacing between adjacent slots **38** as well as the spacing between adjacent apertures **44** conforms to the standardised width unit W and such that the 2W, 3W, 4W and 6W cassettes **32** can be readily accommodated on the tray.

Referring now to FIG. **5**A, in a first alternative embodiment of the system each receptacle modules **52** comprises a duplex type module arranged vertically. Additionally in a first cassette size four (4) of such duplex modules **52** are provided to provide for eight (8) receptacles **54** for terminating a fiber optic cable (not shown) comprised of eight (8) optic fibers. Similar to the first embodiment discussed above, sizes for twelve (12), sixteen (16) and twenty four (24) receptacles are also provided. Again, as the width of the cassettes is an integer multiple of the same pitch/width, cassettes of different widths can be used in the same tray system or in some cases on the same tray without modification or changing the density of the receptacles **54** for terminating optic fibres.

Referring now to FIG. **5**B, in a second alternative embodiment of the system each receptacle modules **52** comprises a Quad type module arranged vertically. In a first cassette size two (2) of such quad modules **52** are provided to provide for eight (8) receptacles **54** for terminating a fiber optic cable (not shown) comprised of eight (8) optic fibers. Cassettes comprising three (3), four (4) and six (6) quad type modules **52** are provided to provide respectively twelve (12), sixteen (16) and twenty-four (24) receptacles. Again, as the width of the cassettes is an integer multiple of the same pitch/width, cassettes of different widths can be used in the same tray system or in some cases on the same tray without modification or changing the density of the receptacles **54** for terminating optic fibres.

Referring now to FIG. **5**C, in a third alternative embodiment of the system each receptacle modules **52** comprises a duplex type module arranged horizontally in two rows. In a first cassette size four (4) of such duplex modules **52** are provided to provide for eight (8) receptacles **54** for terminating a fiber optic cable (not shown) comprised of eight (8) optic fibers. Cassettes comprising six (6), eight (8) and twelve (12) duplex type modules **52** are provided to provide respectively twelve (12), sixteen (16) and twenty-four (24) receptacles. Again, as the width of the cassettes is an integer multiple of the same pitch/width, cassettes of different widths can be used in the same tray system or in some cases on the same tray without modification or changing the density of the receptacles **54** for terminating optic fibres.

Referring now to FIGS. **6**A and **6**B in addition to FIG. **1**, in an alternative embodiment of an assembly for securing the cassettes **32** to the tray **12** the tray **12** is manufactured from a ferrous material such as steel or the like and the fastener comprises a magnet **66** which is attracted to the tray and embedded or otherwise secured within a recess **68** formed in the underside **50** of the cassette **32**. The tray **12**, further comprises a series of spaced slots **70** arranged along the raised shoulder **46** which engage bosses **72** to ensure correct positioning of the cassettes **32** on the tray **12**.

Referring now to FIG. **7**A in a second alternative illustrative embodiment other equipment, such as a cable management bracket **74** can be provided with the same width W and such that they can be mounted to together with the cassettes **32** to the tray **12**. In this regard, and with reference to FIG. **7**B in addition to FIG. **7**, the cable management bracket **74** is provided with tabs **76** comprising an inverted

"T" cross section which engage with engage a slot **38** on the tray **12**. A flexible tab **78** is provided which comprises a boss **80** that engages one of the apertures **44** in the tray **12** when the tab **76** is engaged within its respective slot **38**, thereby releasable securing the cable management bracket **74** to the tray **12**. In order to better orient the cable management bracket **74** on the tray during installation, the raised shoulder **46** of the tray **12** is received within a channel **82** moulded or otherwise formed in the underside **84** of the cable management bracket **74**. Additionally, each cable management bracket **74** includes a cable management loop **86** for receiving a plurality of optic fibres (not shown) which are terminated at respective ones of the receptacles **54**. A flexible strip **88** across the mouth of the cable management loop **86** is provided to releasably retain the plurality of optic fibers within the loop **86**.

Although the present invention has been described hereinabove by way of specific embodiments thereof, it can be modified, without departing from the spirit and nature of the subject invention as defined in the appended claims.

The invention claimed is:

1. A modular fiber optic cassette system, the system comprising:

a case comprising a top and a bottom wall and two opposed side walls, each of said sidewalls attached between respective side edges of said top and bottom wall, said walls together defining a tray receiving space there between and a forward edge of each said wall together defining an opening to said tray receiving space;

at least one tray slideably received within said tray receiving space for movement between a stored position wherein said tray is completely inside said tray receiving space and an accessible position wherein a front end of said tray is in front of said opening and outside of said tray receiving space;

a set of fiber optic cassettes, a selected plurality of the cassettes arrangeable side by side along said tray front end wherein each of said cassettes comprises a plurality of optic plug receiving receptacles arranged side by side in a row along a front thereof, a first of said set of cassettes comprising a first cassette width as measured between outer side edges thereof of one of one, two, three, four and six standard width units and a second of said cassettes comprising a second cassette width as measured between outer side edges thereof different from said first cassette width and one of one, two, three, four and six standard width units; and

a fastener for removeably securing each of said cassettes to said tray;

wherein when arranged on the tray an outer side edge of each of said selected cassettes is directly adjacent an outer side edge of at least one other selected cassette.

2. The modular fiber optic cassette system of claim **1**, wherein said tray has a width dimensioned to receive at least twelve standard width units side by side.

3. The modular fiber optic cassette system of claim **1**, wherein each of said cassettes comprises a multi fiber connector receiving receptacle arranged on a rear thereof and a plurality of optic fibers, one of said optic fibers interconnecting a respective one of said optic plug receiving receptacles with said multi fiber connector receiving receptacle.

4. The modular fiber optic cassette system of claim **1**, wherein each of said cassettes comprises four fiber optic plug receiving receptacles arranged side by side in a row along a front thereof for each standard width unit.

5. The modular fiber optic cassette system of claim **1**, wherein said system is for mounting in a rack and further comprising a pair of mounting brackets, one of said brackets attached to each of said sidewalls on either side of an outside of said case, said mounting brackets for securing said case to the rack.

6. The modular fiber optic cassette system of claim **1**, wherein said tray is manufactured from a ferrous metal and said fastener comprises a magnet.

7. The modular fiber optic cassette system of claim **1**, further comprising at least one elongate cable management bracket comprising a cable management loop and a fastener for removeably securing said at least one bracket to said tray, said bracket having a bracket width of one of said standard width units and further wherein when installed on said tray adjacent an installed one of said cassettes, said cable management loop is positioned in front of and to a side of said plurality of optic plug receiving receptacles of said installed cassette.

8. A method for organising a tray comprising a front edge in a fiber optic interconnect system, the method comprising:

defining a standard width unit wherein a width of the front edge is substantially evenly divisible by said standard width unit;

selecting a plurality of cassettes for installation on the tray from a set of cassettes having a plurality of different widths as measured between respective outer side edges thereof, wherein each of said different widths is evenly divisible by said standard width unit; and

releasably securing said selected cassettes along the front edge of the tray;

wherein when arranged on the tray an outer side edge of each of said selected cassettes is directly adjacent an outer side edge of at least one other selected cassette.

9. The method for organising a tray of claim **8**, wherein said set of cassettes comprises cassettes comprising widths of one, two, three, four and six standard width units.

10. The method for organising a tray of claim **8**, wherein said selected cassettes all comprise the same width.

11. The method for organising a tray of claim **8**, wherein said selected cassettes comprise a first cassette having a first width and a second cassette having a second width different from said first width.

12. The method for organising a tray of claim **11**, wherein said selected cassettes further comprise a third cassette comprising a third width different from said first width and said second width.

13. The method for organising a tray of claim **8**, wherein the width of the front edge is substantially evenly divisible by a maximum of twelve (12) of said standard width units.

* * * * *