US 20060261015A1

(19) United States

(12) Patent Application Publication

Blackwell

(10) Pub. No.: US 2006/0261015 A1

(43) Pub. Date: Nov. 23, 2006

(54) INTERLOCKING MODULES FOR HIGH PACKING RATIOS

(76) Inventor: **Donald A. Blackwell**, Saratoga, CA (US)

Correspondence Address:
WORKMAN NYDEGGER
(F/K/A WORKMAN NYDEGGER & SEELEY)
60 EAST SOUTH TEMPLE
1000 EAGLE GATE TOWER
SALT LAKE CITY, UT 84111 (US)

(21) Appl. No.: **11/419,709**

(22) Filed: **May 22, 2006**

Related U.S. Application Data

(60) Provisional application No. 60/684,003, filed on May 23, 2005.

Publication Classification

(51) **Int. Cl.**
A47F 7/00 (2006.01)

(52) **U.S. Cl.** **211/26**

(57) **ABSTRACT**

According to one example, a rack unit assembly is provided herein that includes a frame and a modular network component having at least one interlocking part associated therewith. The rack unit assembly also includes frame key mounted on the frame. The interlocking part is configured to be interlockingly coupled to the frame key.

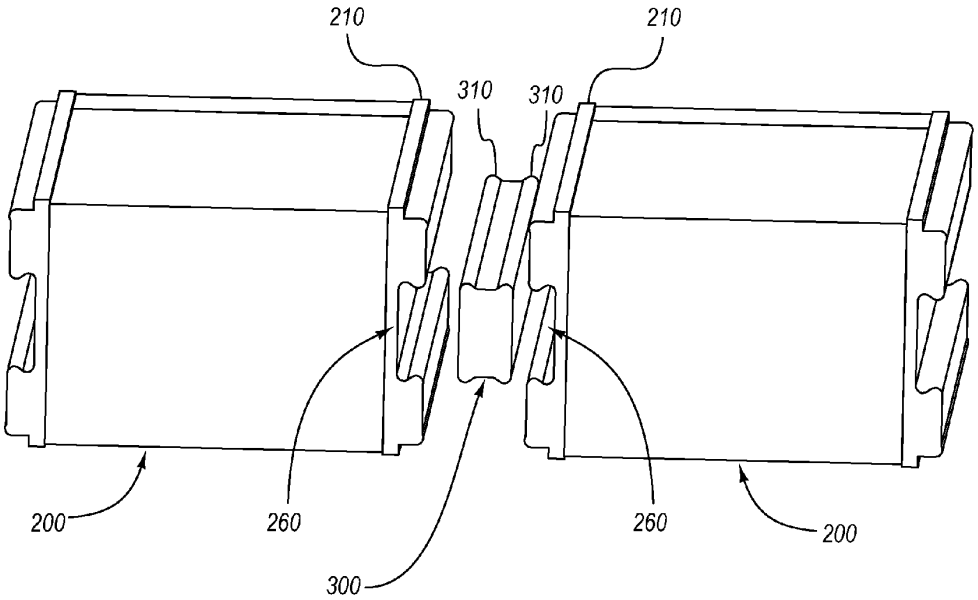

CommScope Ex. 1038

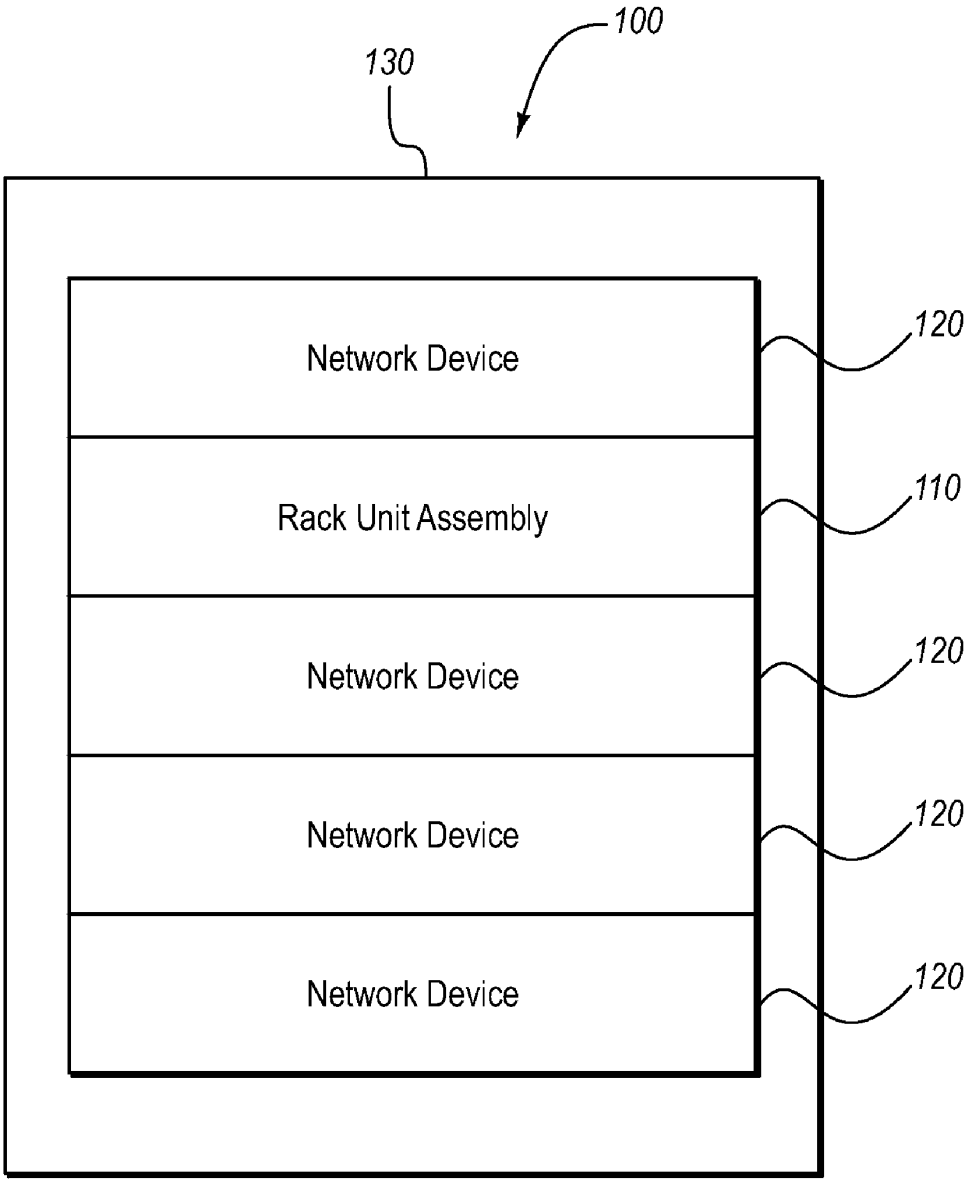
100
130
Network Device
120
Rack Unit Assembly
110
Network Device
120
Network Device
120
Network Device
120

FIG. 1

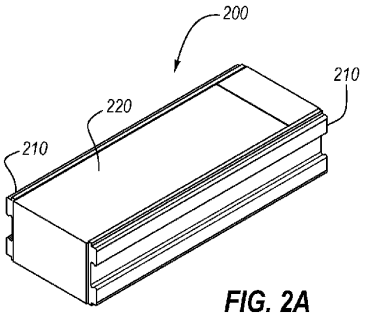

FIG. 2A

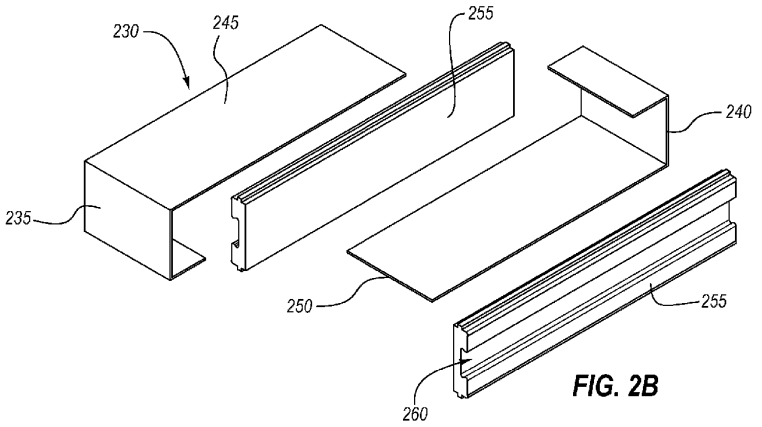

FIG. 2B

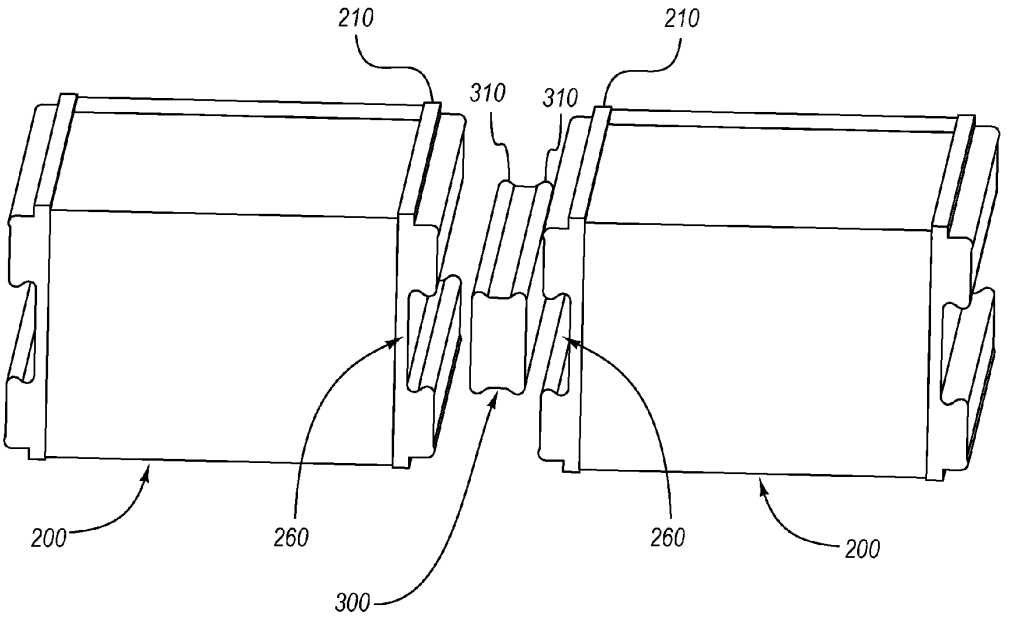

FIG. 3

CommScope Ex. 1038

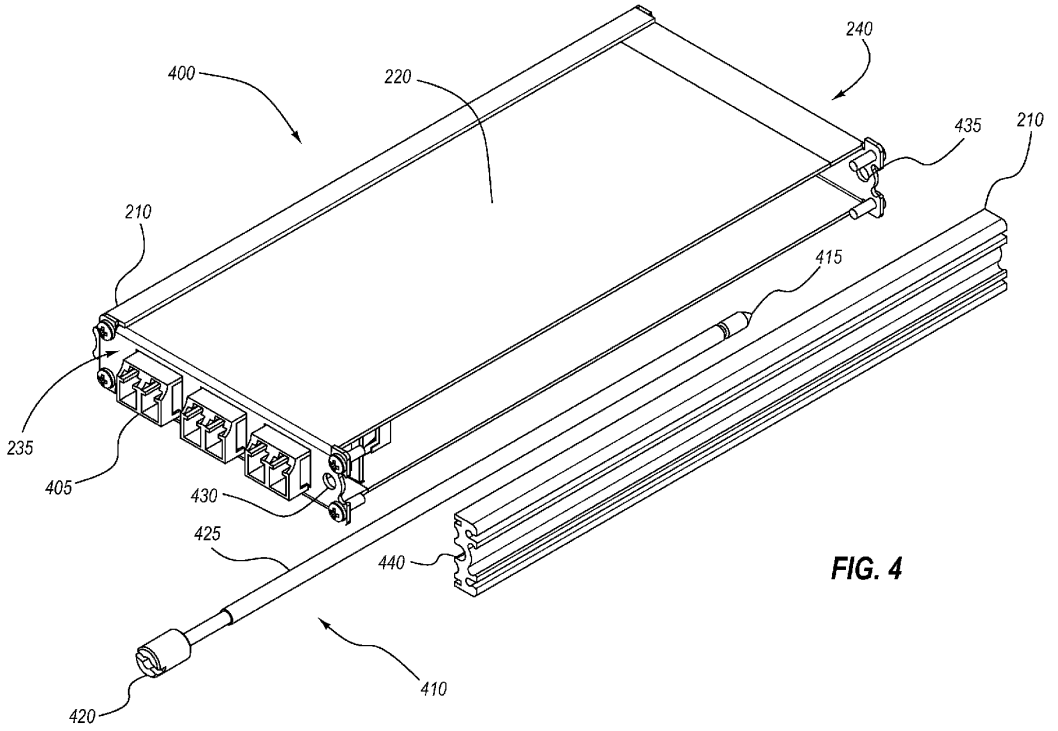

FIG. 4

CommScope Ex. 1038

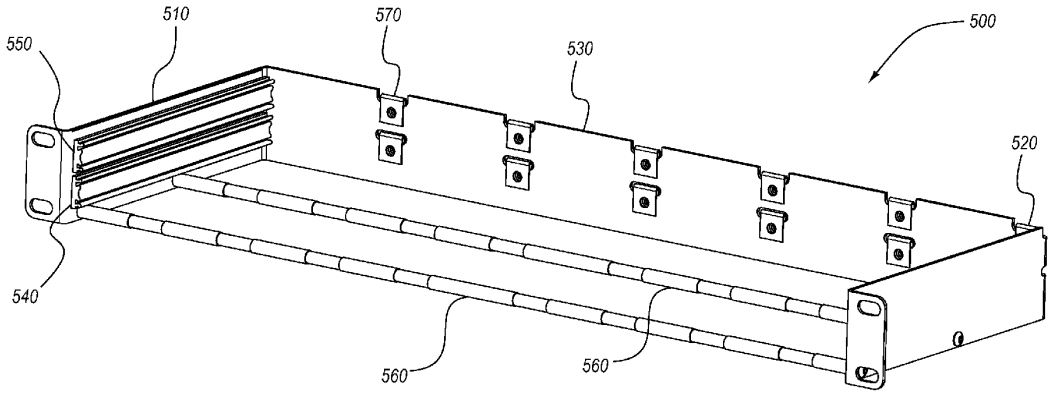

FIG. 5

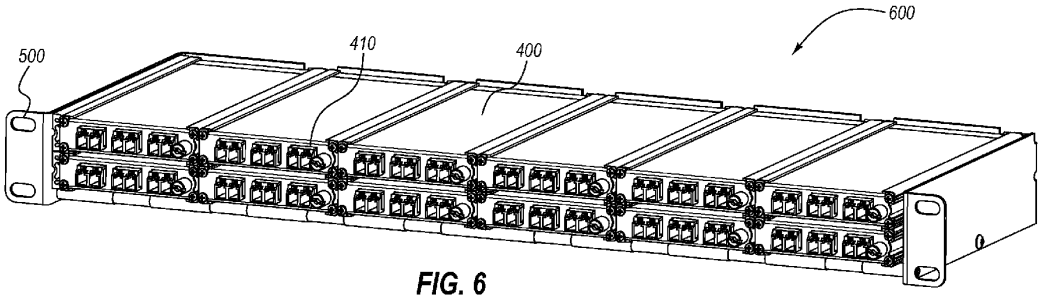

FIG. 6

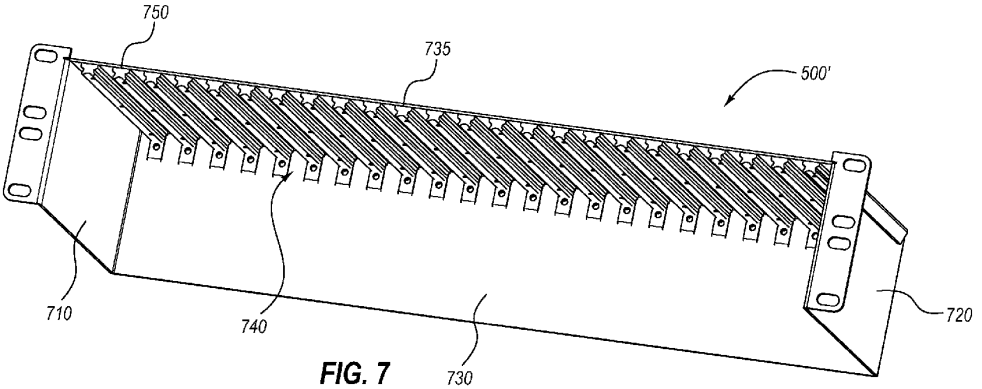

FIG. 7

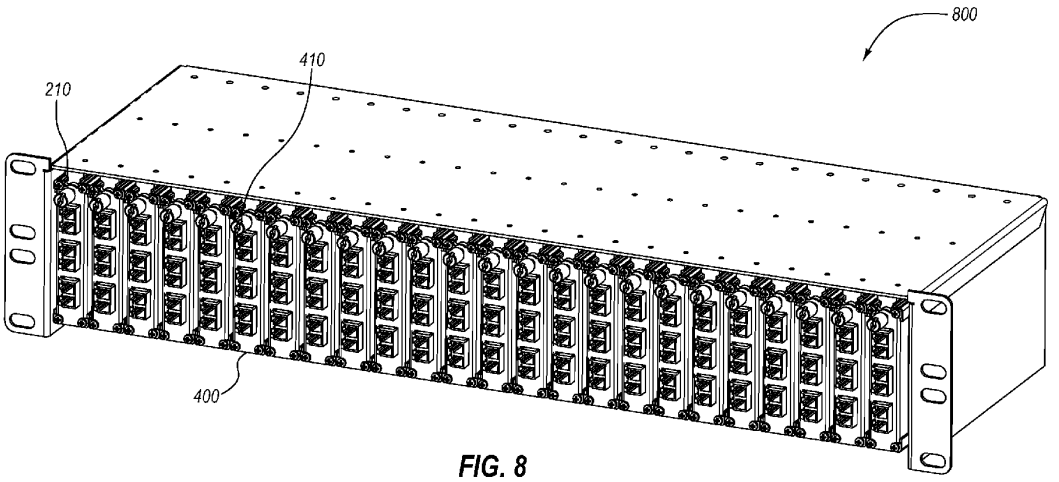

FIG. 8

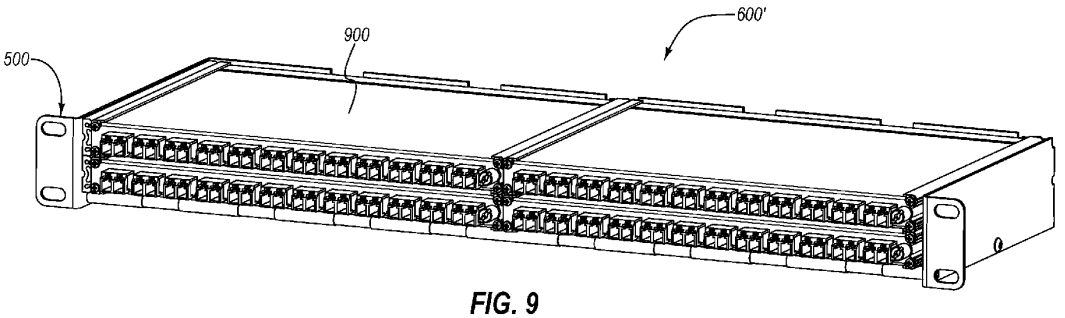

FIG. 9

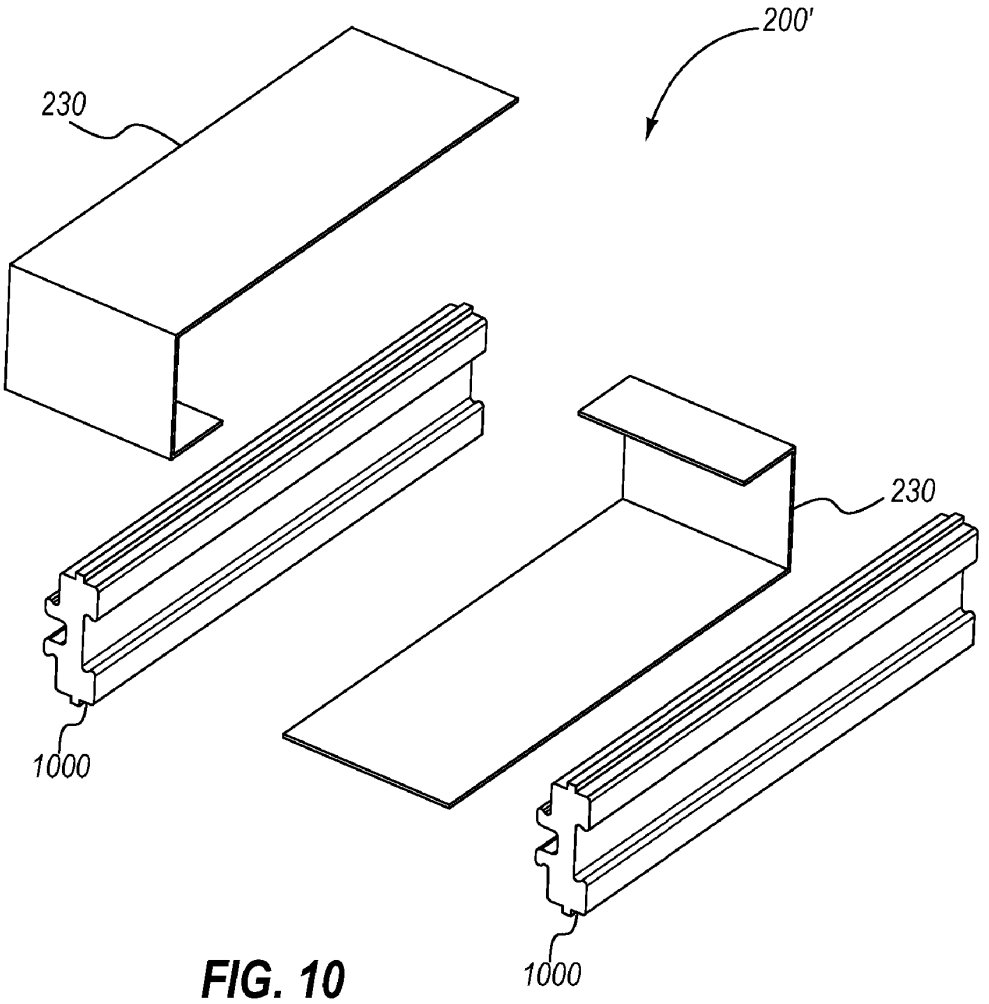

FIG. 10

INTERLOCKING MODULES FOR HIGH PACKING RATIOS

CROSS-REFERENCE TO RELATED APPLICATIONS

[0001] This application claims the benefit of U.S. Provisional Patent Application Ser. No. 60/684,003, filed May 23, 2005 and entitled INTERLOCKING MODULES FOR HIGH PACKING RATIOS, which application is incorporated herein by reference in its entirety.

BACKGROUND OF THE INVENTION

[0002] 1. The Field of the Invention

[0003] The present invention relates to the field of network communications systems. More particularly, embodiments of the invention relate to an interlocking module that provides a high packing ratio of network components, such as network taps or other modular electrical or optical components, mounted on a rack.

[0004] 2. The Relevant Technology

[0005] In recent years, it has become increasingly important to have the ability to monitor and analyze the data flow in communication channels between and within networks. Some of these reasons include monitoring the communication channel for certain types of data, identifying and diagnosing network problems, detecting interruptions in the communication channel, detecting degradation in the communication channel, and the like.

[0006] One of the tools used to monitor and analyze networks is a network tap. In general, a network tap is a device that enables network analyzers or other devices to have access to the data transmitted over the network. A tap typically provides a port that can be used to access the network. Once a tap is installed, network analyzers or other devices can access the network data without having to manipulate the network cable or altering the topology of the network. As networks proliferate, the need for more tap ports increases with large installations requiring hundreds if not a thousand or more taps or tap ports. Clearly, the physical space required to install these taps is at a premium.

[0007] Today, network equipment is typically mounted in standardized racks, the most common of which is called a 19 inch rack (named for its overall width). A standard 19" rack is divided up into vertical units called Rack Units (RU) each of which is 1.75" high. Maximizing the number of taps that can be installed in a 19" rack is a key factor in successful deployment of network tools.

[0008] A second consideration when deploying large numbers of taps is cost. Not only does each tap have to occupy minimal space, but each tap must be able to be delivered minimal cost. Conventionally, tap/rack densities of three single port units per RU were common, with higher densities achievable only through the use multi-port taps. Even with multi-port taps, densities greater than six ports per RU are difficult to achieve.

[0009] It would be advantageous to have a system for conveniently managing and storing a set of network tap modules. Any reduction in the space required for maintaining a set of network tap modules would be beneficial. In addition, such techniques for storing a set of network tap modules would also be applicable to any of a number of different types of electrical and optical cards or modules.

BRIEF SUMMARY OF THE INVENTION

[0010] These and other limitations are overcome by embodiments of the invention, which relate to rack unit assemblies. Rack unit assemblies are disclosed herein that include modular network components that have at least one interlocking part. The interlocking parts can form part of the housing or be mounted to the housing of the network components. The use of one or more interlocking parts with the modular network component allows for relatively high densities of the modular network components within a rack unit.

[0011] Accordingly, a first example embodiment of the invention is a rack unit assembly that includes a modular network component having at least one interlocking part associated therewith. The rack unit assembly also includes a frame having a frame key mounted thereon. The interlocking part of a network component is configured to be coupled to the frame key.

[0012] The interlocking part typically has a profile that can be configured to interlock with an opposite gender profile of an adjacent interlocking part on an adjacent network module. Alternatively, each of the adjacent network modules can have the same gender profile and a key can be used to couple or interlock the adjacent modules.

[0013] The rack unit assembly can have a generally horizontal configuration where network modules connect via the interlocking parts. Alternatively, the rack unit assembly can have a generally vertical configuration. In this case, multiple frame keys are mounted to a frame of the rack unit assembly. Each frame key can interlock with an interlocking part of corresponding network modules. In either case, the density is improved per rack unit.

[0014] These and other advantages and features of the present invention will become more fully apparent from the following description and appended claims, or may be learned by the practice of the invention as set forth hereinafter.

BRIEF DESCRIPTION OF THE DRAWINGS

[0015] To further clarify the advantages and features of the present invention, a more particular description of the invention will be rendered by reference to specific embodiments thereof which are illustrated in the appended drawings. It is appreciated that these drawings depict only typical embodiments of the invention and are therefore not to be considered limiting of its scope. It is understood that the drawings are diagrammatic and schematic representations of presently preferred embodiments of the invention, and are not limiting of the present invention nor are they necessarily drawn to scale. The invention will be described and explained with additional specificity and detail through the use of the accompanying drawings in which:

[0016] **FIG. 1** is a schematic view of a network that includes a rack unit assembly having modular network components with interlocking parts.

[0017] **FIG. 2A** is a perspective view of a modular network component having interlocking parts according to one example.

[0018] **FIG. 2B** is an exploded perspective view of a modular network component having interlocking parts according to one example.

[0019] **FIG. 3** is an exploded perspective view of an interlocking key and two modular network components having interlocking parts according to one example.

[0020] **FIG. 4** is a perspective view of a traffic access port having interlocking features and a restraining device according to one example.

[0021] **FIG. 5** is a perspective view of a frame according to one example.

[0022] **FIG. 6** is a perspective view of a rack unit assembly according to one example.

[0023] **FIG. 7** is a perspective view of a rack unit frame according to one example.

[0024] **FIG. 8** is a frontal view of a rack unit assembly according to one example.

[0025] **FIG. 9** is a perspective view of a rack unit assembly that includes interlined multi-port taps according to one example.

[0026] **FIG. 10** illustrates a perspective view of a modular network component having interlocking features according to one example.

DETAILED DESCRIPTION OF THE PREFERRED EMBODIMENTS

[0027] Devices, assemblies and methods are provided herein for increasing the density of modular network components that are located within and occupy a rack unit (RU) or that are mounted on a rack. According to one example, rack unit assemblies are provided herein that include modular network components coupled to a frame. The modular network components include at least one interlocking feature or part associated therewith. The interlocking parts allow for grouping the modular network components in a variety of configurations. For example, the modular network components may be oriented and grouped horizontally by coupling interlocking parts on one modular network component to interlocking features on one or more adjacent modular network components. Modular network components adjacent the frame may then in turn be coupled to keys which are secured to the frame. Restraining devices may be optionally used to further secure the modular network components to the frame.

[0028] Other rack unit assemblies are discussed wherein the modular network components are oriented vertically. According to one example, the frame includes a plurality of frame keys, wherein one or more of the network components are associated with each frame key to facilitate the vertical orientation of the modular network components to the frame. The modular network components may include traffic access ports (taps).

[0029] The use of interlocking features in a rack unit assembly increases the number of such taps, both single port and multi-port, that can be installed in one RU while minimizing the cost of not only the tap itself but also the cost of the system used to mount the taps in the rack. For example, rack units assemblies are discussed herein that achieve densities as high as 12 single ports per RU or higher and 16 ports per RU or higher in 4-port multi-port taps. These densities are achieved through the use of interlocking parts that allow the taps to be nested very tightly while maintaining a rigid and secure mounting arrangement. Examples of rack unit assemblies having vertically and horizontally oriented modular network components will be discussed in more detail below.

[0030] **FIG. 1** illustrates a rack unit assembly **110** used in a network **100**. The The network **100** may be any type of network. For example, the network **100** may be a local area network (LAN), a wide area network (WAN), a storage area network (SAN), and/or any other type of network that includes network devices. In any case, the network **100** allows for communication between two or more network devices **120**.

[0031] A number of the network devices **120** may be grouped together and mounted on a rack **130**. For example, the rack **130** or cabinet is divided into a number of compartments having a standard size, such as 19" wide by 1.75" high. Each compartment may be referred to as a rack unit (RU). The network devices **120** may occupy any number of these rack units. For example, some network devices may occupy one, two or more rack units depending on their size.

[0032] In one example, a rack unit assembly **110** can be used to mount multiple network components. Embodiments of the invention enable the network components to be tightly and securely mounted in the rack unit assembly **110**. The rack unit assembly **110** is also secured to the frame **130**. According to one example, modular network components grouped with the rack unit assembly **110** provide access to connections between network devices **100**. For example, the rack unit assembly **110** may include a plurality of traffic access ports (taps) that provide direct monitoring of the network traffic flowing through each link between network devices **110**. Those of skill in the art will appreciate that other types of modular network components may be located in a grouped configuration within the rack unit assembly **110**.

[0033] The rack unit assembly **110** is configured to occupy one or more rack units. Further, the rack unit assembly **110** provides high density grouping of modular network components per rack unit. Each rack unit assembly **110** includes at least one interlocking part associated with each of the modular network components. The interlocking parts may couple a modular network component to an adjacent device and/or to the frame of the rack unit assembly **110**. Such a configuration may increase the density of such modular network components per rack unit. An exemplary modular network component having at least one interlocking part will now be discussed in more detail. Such a modular network component can be mounted to a frame of the rack unit assembly **110**.

[0034] **FIG. 2A** illustrates a modular network component **200** having interlocking parts **210**. The modular network component **200** includes a housing **220** that provides a framework for various electrical and/or optical components. The various inputs, outputs, and/or other components of the modular network component **200** have been omitted to focus on the configuration of the interlocking parts. Those of skill in the art will appreciate that any type of modular network component may have interlocking parts **210** coupled thereto or formed therewith.

[0035] **FIG. 2B** illustrates an exploded view of the modular network component **200**. As seen in **FIG. 2B**, the housing may be formed of overlapping flaps **230** that when coupled together form four of the six surfaces of the modular network component. For ease of reference, these four surfaces will be referred to as the front **235**, the back **240**, the top **245**, and the bottom **250** of the assembled modular network component **200** (**FIG. 2A**). The interlocking parts **210** form the sides of the assembled modular network component. Those of skill in the art will appreciate that these labels are applied for ease of reference only, and should not be construed to limit the disclosure to any one orientation or configuration. Further, the housing **220** can be formed in other configurations. For example, each of the four surfaces may be formed from a separate flap that is then connected to the other flaps.

[0036] The overlapping flaps **230** may be formed of any suitable material. According to one example, the overlapping flaps are formed of a metallic material, such as sheet metal. The overlapping flaps **230** may be cut and bent to the shape shown, using suitable techniques.

[0037] The interlocking parts **210** may be formed by any suitable process, including, without limitation, extrusion, casting, machining, or any combination of such processes. Further, the interlocking parts **210** may be formed of any suitable material, such as metallic materials, plastic materials, composite materials, or some combination of such materials. As introduced, the interlocking parts **210** according to the present example form the sides of the modular network component. Those of skill in the art will appreciate other configurations are possible in which interlocking parts **210** are separately provided and coupled to the housing **220**.

[0038] Thus, the housing **220** is configured to receive the interlocking parts **210**. The interlocking parts **210** thus form the sides of the network component. When the interlocking part **210** is connected to the housing **220**, at least a portion f the interlocking parts **220** are disposed inside of the housing **220**. When one network component is mounted adjacent another network component using the interlocking parts **210**, the distance between the network components can be controlled by the configuration of the interlocking part **210**. In the illustrated example, the distance is determined by a depth of a protrusion receiving profile **260**.

[0039] The interlocking part **210** can form part of the housing **220**, be mounted to edges of the housing **220**, and the like. The interlocking part **210** on a first network component may have a first profile and the interlocking part **210** on an adjacent network component may have a second profile. In this example, the second profile effectively functions as a key to interlock the two network components.

[0040] The interlocking parts on adjacent network components can provide the support needed to mount multiple network components within a given rack unit assembly. A frame part, which is similar to an interlocking part **210**, can be used to couple a network component to the frame in a similar manner that adjacent network components are interlocked with the interlocking parts. In this manner, the port density per rack unit is increased.

[0041] The interlocking parts **210** according to one example are single gender interlocking parts located along opposing sides of the modular network component **200**. The interlocking parts **210** illustrated in **FIG. 2A** are female-type interlocking parts. Accordingly, each interlocking part **210** includes a protrusion receiving profile **260** formed therein. The protrusion receiving profile **260** is located on an outer portion of each of the interlocking parts **210**, such that when the modular network component **200** is assembled, the protrusion receiving profile **260** is on the outside of the modular network component **200**.

[0042] Additional components may be provided to couple one interlocking part **210** to one or more adjacent interlocking part **210**, and thus couple one modular network component **220** to an adjacent modular network component. As seen in FIG. **3**, an interlocking key **300** is provided that joins adjacent interlocking parts **210**. The interlocking key **300** couples adjacent interlocking parts **210** by engaging the interlocking parts **210** of each modular network component. In particular, the interlocking key **300** may include opposing protrusions **310**. These protrusions **310** may be slid into engagement with each of the protrusion receiving profiles **260**. This interlocking configuration provides a rigid assembly that compactly joins the units and prevents the units from sliding apart.

[0043] The interlocking key **300** can be made from a different material than either or both of the interlocking parts **200** to provide ease of assembly with tight tolerance parts. This combination may include a plastic interlocking key with metal protrusion receiving profiles, a metal key with plastic protrusion receiving profiles or a soft metal interlocking key with harder metal protrusion receiving profiles, etc. The use of dissimilar materials may reduce the galling of surfaces that can occur when like materials are joined with a sliding action, especially with tight tolerance parts.

[0044] In addition to providing interlocking parts and interlocking keys for assembling modular network components, frames may be provided with keying features, supports, and optional restraining devices to further increase the density of modular network components within a rack unit assembly. One example of a rack unit assembly is shown in **FIGS. 4-6**. In particular, **FIG. 4** illustrates an exploded perspective view of a tap **400** that includes interlocking parts **210** and a restraining device **410**. The tap is **400** is an example of a network modular component that may be mounted in a rack unit assembly. **FIG. 5** illustrates a frame **500** of a rack assembly unit and **FIG. 6** illustrates the frame **500** with interlocking taps **400** assembled therein to form a rack unit assembly **600**. The tap **400**, the frame **500**, and the rack unit assembly **600** will each now be discussed in more detail.

[0045] The tap **400** illustrated in **FIG. 4** includes interlocking parts **210** and a housing **220**, similar to those described above with reference to the modular network component **200**. The tap **400** includes a plurality of ports **405**. These ports include inlet and outlet ports for the traffic flowing through the link to which the tap **400** is connected. The tap **400** also includes outlet ports that provide a mirrored copy of the traffic flowing through tap **400**. Thus, the tap **400** provides access to traffic flowing therethrough while minimizing the possibility that the traffic will be interrupted.

[0046] Additionally, a restraining device **410** is associated with the tap **400**. The restraining device **410** may be used to reduce the possibility that the tap **400** will slide out of the frame **500** (**FIG. 5**) when mounted thereto. The restraining

device **410** may be part of the tap or the frame **500**. For ease of reference, the restraining device **410** will be discussed as being a threaded rod that is mounted to the tap **400** and is then secured to the frame **500**.

[**0047**] More specifically, the restraining device **410** includes a frame engagement end **415**, a knob **420**, and a shaft **425** extended therebetween. According to the example shown in **FIG. 4**, the restraining device **410** is configured to pass through both the housing **220** and the interlocking part **210**, although the restraining device **410** may pass through either the housing **20** or the interlocking part **210**. In this example, holes **430**, **435** are defined in the front **235** and the rear **240** of the housing **220** respectively. A channel **440** is formed in the interior portion of the interlocking part **210**. When the restraining device **410** is coupled to the tap **400**, the frame engagement end **415** extends beyond the rear **240** of the housing **220** while the shaft **425** passes through the hole **430** in the front **235** of the housing, through the channel **440** formed in the interlocking part **210**, and through the hole **435** defined in the rear **240** of the housing **220**. The knob **420** remains at least partially outside of the housing **220**, such as at a location near the front **235**.

[**0048**] The frame engagement end **415** is configured to engage a corresponding feature in the frame **500** (**FIG. 5**). For example, the frame engagement end **415** may have threads formed thereon to engaged threads formed in the frame **500** (**FIG. 5**). Thus, rotating the knob **420** rotates the shaft **425** and the frame engagement end **415**, thereby allowing a user to secure the tap **400** to the frame **500**. Other restraining devices may be used to secure the tap **400** to the frame **500**, such as restraining devices that include a twist lock, a tab lock or a detent type device.

[**0049**] **FIG. 5** illustrates the frame **500** in more detail. The frame **500** includes side members **510**, **520** as well as a rear member **530**. Such labels are used for ease of reference only. According to the present example, at least one of the side members **510**, **520** has at least one keying assembly **540** coupled thereto.

[**0050**] According to the example shown, the keying assembly **540** is connected to the side member **510** and includes a plurality of frame keys **550** that are of the opposite gender as the interlocking part **210** that is to be engaged thereby. More specifically, the frame keys shown in **FIG. 5** are configured to interface with female-type interconnecting parts. As such, the key assembly **540** includes male-type keys **550** configured to engage the protrusion receiving profiles **260** (**FIG. 2A**) associated with the taps **400** (**FIG. 4**). While male-type frame keys **550** have been discussed, those of skill in the art will appreciate that any configuration may be used to secure at least one end of at least one modular network component such as the tap **400** to the frame **500**. Thus, the interlocking parts **2310** may have a male receiving profile and the key assembly may have a corresponding female key **550**.

[**0051**] The frame **500** according to the present example also includes supports **560**. The supports **560** extend between the side members **510**, **520**. The supports **560** provide additional support for taps **400** (**FIG. 4**) or other modular network components coupled to the frame **500**. Additionally, as introduced, the restraining device **410** (**FIG. 4**) is configured to secure the tap **400** (**FIG. 4**) to the frame **500**. In this manner, the restraining device **410** can also provide additional support for the taps **400** or other network components. Accordingly, the frame **500** includes restraining device interfaces **570** associated therewith. The restraining device interfaces **570** may include a threaded tab that is configured to engage the frame engaging end **415** of the restraining device **410** (**FIG. 4**). When one or more retraining devices **410** (**FIG. 4**) engage the restraining device interfaces **570**, the tap or taps associated with that restraining device **410** are thereby further secured to the frame **500**.

[**0052**] **FIG. 6** illustrates taps **400** secured to the frame **500** to form the rack unit assembly **600**. As seen in **FIG. 6**, the taps **400** are grouped in two horizontal rows with six individual taps **400** per row. The rack unit assembly **600** thus includes twelve taps in a single standard sized rack unit (RU), for a density of twelve taps per rack unit. The ends of each row according to the present example are each coupled to keying assemblies **540** coupled to each of the side members **510**, **520**. Additionally, each tap **400** includes a restraining device **410** associated therewith. Those of skill in the art will appreciate that other configurations are possible that include ratios of taps to restraining devices of greater or less than 1:1. Still other configurations are possible that include vertically oriented modular network components.

[**0053**] **FIG. 7** illustrates a frame **500'** configured to receive vertically oriented modular network components, such as taps **400** (**FIG. 4**). The frame **500'** includes side members **710**, **720**; a rear member **730**; and a top member **735**. A keying assembly **740** is coupled to the top member **735**. The keying assembly **740** includes a plurality of frame keys **750**. In a similar fashion to the horizontally oriented rack unit assembly **600** (**FIG. 6**) previously discussed, the frame keys **750** are of the opposite gender as the interlocking parts **210** that are engaged thereby. Consequently, the frame keys **750** shown in **FIG. 7** are male-type frame keys configured to interface with female-type interconnecting parts. While male-type frame keys **750** have been discussed, those of skill in the art will appreciate that any configuration may be used to secure at least one end of at least one modular network component such as the tap to a frame **500'**.

[**0054**] **FIG. 8** illustrates a rack unit assembly **800** wherein a plurality of taps **400** are coupled to the frame **500'**. The taps **400** are oriented in a generally vertical arrangement. In this orientation, each tap **400** includes an interlocking part **210** on the top portion of the tap **400**, which is rotated relative to the orientation shown in **FIG. 4**. The interlocking parts **210** engage a frame key **750** within the keying assembly **740** to thereby couple the taps **400** to the frame **500'** as previously discussed.

[**0055**] A number of restraining devices **410** couple one or more taps **400** to the frame **500'**. In such a configuration, the rack unit assembly **400** provides a high density of taps per rack unit. In particular, as illustrated in **FIG. 8**, the rack unit assembly **400** includes 24 taps coupled to the frame **500'**. The frame **500'** occupies two rack units (RU's), such that the density of the rack unit assembly **800** is twelve taps **400** per rack unit, in this example.

[**0056**] The rack unit assembly **800** includes the taps **400** coupled to a single keying assembly located at the top of the rack **500'**. Thus far, single taps have been discussed with reference to the rack unit assemblies. Other configurations are possible that include multi-port modular network components, such as multi-port taps.

[**0057**] In particular, **FIG. 9** illustrates a multi-port tap **900** that includes an interlocking part **210** associated therewith. The multi-port tap **900** shown may be formed as discussed

above or otherwise. Multi-port tap **900** may then be coupled to a frame **500** to form a rack unit assembly **600'**, as shown in **FIG. 9**. The multi-port tap **900** shown is a four port tap. The frame **500** shown occupies a single RU, such that the rack unit assembly **600'** has a tap density of sixteen taps per RU. Accordingly, multi-port or otherwise clustered modular network components may be grouped and coupled to a rack using interlocking parts to provide a rack unit assembly **600'** having a relatively high density of modular network components.

[**0058**] To this point, single gender interlocking parts have been discussed herein that are coupled together using one or more interlocking keys. Additional configurations are possible. For example, interlocking parts of both genders may be used together, such that a male-type interlocking part may be coupled to a female-type interlocking part. Further, a modular network component **200'** may include a single shape for an interlocking part **1000** that incorporates both the male and female features, as shown in **FIG. 10**. As seen in **FIG. 10**, the interlocking part **1000** is seated in the sides of the housing formed by overlapping flaps **230** in a similar fashion as the interlocking parts **210** discussed above.

[**0059**] In conclusion, modular network components have been discussed herein that include at least one interlocking part. The interlocking parts may be coupled to interlocking parts on one or more adjacent modular network components and/or to frame keys secured to a frame. Such a configuration may increase the relative density of modular network components that occupy a rack unit.

[**0060**] The present invention may be embodied in other specific forms without departing from its spirit or essential characteristics. The described embodiments are to be considered in all respects only as illustrative and not restrictive. The scope of the invention is, therefore, indicated by the appended claims rather than by the foregoing description. All changes which come within the meaning and range of equivalency of the claims are to be embraced within their scope.

What is claimed is:

1. A rack unit assembly, comprising:

at least one interlocking part configured to have a modular network component associated therewith;

a frame having a frame key; wherein said interlocking part is configured to be interlockingly coupled to said frame key.

2. The assembly of claim 1, wherein said modular network component comprises a traffic access port.

3. The assembly of claim 2, wherein said traffic access port includes at least one of a single port traffic access port and a multi-port traffic access port.

4. The assembly of claim 1, wherein said modular network component is oriented generally horizontally relative to said frame.

5. The assembly of claim 1, wherein said modular network component is oriented generally vertically relative to said frame.

6. The assembly of claim 1, wherein said interlocking part comprises a female-type interlocking part.

7. The assembly of claim 1, further comprising a plurality of interlocking parts associated with said modular network component.

8. The assembly of claim 7, wherein said plurality of interlocking parts comprise single gender-type interlocking parts and further comprising at least one interlocking key configured to couple at least one of said interlocking parts associated with said modular network component to at least one interlocking part associated with at least one adjacent modular network component.

9. The assembly of claim 1, and further comprising a restraining device configured to secure said modular network component to said frame.

10. A rack unit assembly, comprising:

at least one first interlocking part configured to have a first modular network component associated therewith;

at least a second interlocking part configured to have a second modular network component associated therewith; and

an interlocking key configured to couple said first interlocking part to said second interlocking part.

11. The assembly of claim 10, wherein said first interlocking part and said second interlocking part comprise single gender-type interlocking parts.

12. The assembly of claim 11, wherein said single gender-type interlocking parts comprise female-type interlocking parts.

13. The assembly of claim 10, wherein said interlocking key is integral to at least one of said first interlocking part and said second interlocking part.

14. The assembly of claim 9, wherein said interlocking key is made of a different material than at least one of said first and second interlocking parts.

15. The assembly of claim 9, further comprising a frame, said frame having at least one frame key configured to engage at least one of said interlocking parts.

16. A system for providing a high packing ratio of network devices, comprising:

a first network component having an interlocking part formed of a first material and having a first shape;

a second network component having an interlocking part formed of the first material and having the first shape; and

a key configured to mate with the shape of the interlocking parts, whereby the key can be mated to the interlocking parts on each of the first network device and the second network device to securely and compactly connect the first network device to the second network device.

17. The system of claim 15, wherein said first and second network devices comprise single port traffic access ports.

18. The system of claim 15, wherein said first and second network devices are grouped with a density of twelve traffic access ports per rack unit or greater.

19. The system of claim 16, wherein said first and second network devices comprise multi-port traffic access ports.

20. The system of claim 16, wherein said first and second network devices are grouped with a density of sixteen traffic access ports per rack unit or greater.

21. The system of claim 16, wherein said interlocking key is formed of a material different from said first material.

* * * * *