IN THE UNITED STATES PATENT AND TRADEMARK OFFICE

In re Patent of:	Gregory G. Raleigh, et al.	
U.S. Patent No.:	9,647,918	Attorney Docket No.: 39843-0182IP1
Issue Date:	May 9, 2017	
Appl. Serial No.:	15/227,814	
Filing Date:	August 3, 2016	
Title:	MOBILE DEVICE AND METHOD ATTRIBUTING MEDIA SERVICES NETWORK USAGE TO REQUESTING APPLICATION	

Mail Stop Patent Board
Patent Trial and Appeal Board
U.S. Patent and Trademark Office
P.O. Box 1450
Alexandria, VA 22313-1450

PETITION FOR *INTER PARTES* REVIEW OF UNITED STATES PATENT NO. 9,647,918 PURSUANT TO 35 U.S.C. §§ 311–319, 37 C.F.R. § 42

TABLE OF CONTENTS

I. REQUIREMENTS FOR IPR 1
- **A.** Grounds for Standing 1
- **B.** Challenge and Relief Requested 1
- **C.** Claim Construction 2
- **D.** Level of Ordinary Skill in the Art 2

II. THE '918 PATENT 3
- **A.** Brief Description 3
- **B.** Prosecution History 5
- **C.** Critical Date of the '918 Patent 6

III. THE CHALLENGED CLAIMS ARE UNPATENTABLE 12
- **A.** [GROUND 1A] – Bennett and Vadde render claims 1-3, 8-9, 13-14, and 19 obvious 12
  - 1. Overview of Bennett 12
  - 2. Overview of Vadde 13
  - 3. The combination of Bennett and Vadde 14
  - 4. Analysis 19
- **B.** [GROUND 1B] – Bennett, Vadde, and Riggs render claims 4-6, 11, and 15-17 obvious 58
  - 1. Overview of Riggs 58
  - 2. The combination of Bennett-Vadde and Riggs 59
  - 3. Analysis 62
- **C.** [GROUND 1C] – Bennett, Vadde, Riggs, and Hendrickson render claims 7, 12, and 18 obvious 74
  - 1. Overview of Hendrickson 74
  - 2. The combination of Bennett-Vadde-Riggs and Hendrickson 75
  - 3. Analysis 77
- **D.** [GROUND 1D] – Bennett, Vadde, Riggs, and Srikantan render claim 10 obvious 85
  - 1. Overview of Srikantan 85
  - 2. The combination of Bennett, Vadde, Riggs, and Srikantan 87
  - 3. Analysis 89

IV. PTAB DISCRETION SHOULD NOT PRECLUDE INSTITUTION 95
- **A.** 35 U.S.C. §325(d) – *Advanced Bionics* 95
- **B.** 35 U.S.C. §314(a) – *Fintiv* 96

V. CONCLUSION AND FEES 98

VI. MANDATORY NOTICES UNDER 37 C.F.R. § 42.8(a)(1) 98

A. Real Party-In-Interest Under 37 C.F.R. § 42.8(b)(1).....98
B. Related Matters Under 37 C.F.R. § 42.8(b)(2).....98
C. Lead And Back-Up Counsel Under 37 C.F.R. § 42.8(b)(3).....98
D. Service Information 99

EXHIBITS

SAMSUNG-1001	U.S. Patent No. 9,647,918 to Gregory G. Raleigh, et al. ("the '918 Patent")
SAMSUNG-1002	Excerpts from the Prosecution History of the '918 Patent ("the Prosecution History")
SAMSUNG-1003	Declaration and Curriculum Vitae of Dr. Patrick Traynor
SAMSUNG-1004	Complaint, *Headwater Research LLC v. Samsung Electronics Co., Ltd. et al.,* 2-23-cv-00641 (EDTX), filed December 29, 2023
SAMSUNG-1005	Infringement Contentions, *Headwater Research LLC v. Samsung Electronics Co., Ltd. et al.,* 2-23-cv-00641 (EDTX), filed May 15, 2024
SAMSUNG-1006	U.S. Provisional Application No. 61/264,126
SAMSUNG-1007	U.S. Provisional Application No. 61/270,353
SAMSUNG-1008	U.S. Provisional Application No. 61/275,208
SAMSUNG-1009	U.S. Provisional Application No. 61/237,753
SAMSUNG-1010	U.S. Provisional Application No. 61/264,120
SAMSUNG-1011	U.S. Provisional Application No. 61/348,022
SAMSUNG-1012	U.S. Provisional Application No. 61/381,159
SAMSUNG-1013	U.S. Provisional Application No. 61/381,162
SAMSUNG-1014	U.S. Provisional Application No. 61/384,456
SAMSUNG-1015	U.S. Provisional Application No. 61/389,547
SAMSUNG-1016	U.S. Provisional Application No. 61/385,020
SAMSUNG-1017	U.S. Provisional Application No. 61/387,243
SAMSUNG-1018	U.S. Provisional Application No. 61/387,247

SAMSUNG-1019 U.S. Provisional Application No. 61/407,358

SAMSUNG-1020 U.S. Provisional Application No. 61/418,507

SAMSUNG-1021 U.S. Provisional Application No. 61/418,509

SAMSUNG-1022 U.S. Provisional Application No. 61/420,727

SAMSUNG-1023 U.S. Provisional Application No. 61/422,565

SAMSUNG-1024 U.S. Provisional Application No. 61/422,572

SAMSUNG-1025 U.S. Provisional Application No. 61/422,574

SAMSUNG-1026 U.S. Provisional Application No. 61/252,151

SAMSUNG-1027 U.S. Provisional Application No. 61/252,153

SAMSUNG-1028 U.S. Provisional Application No. 61/206,354

SAMSUNG-1029 U.S. Provisional Application No. 61/206,944

SAMSUNG-1030 U.S. Provisional Application No. 61/207,393

SAMSUNG-1031 U.S. Provisional Application No. 61/207,739

SAMSUNG-1032 U.S. Application No. 12/695,019

SAMSUNG-1033 U.S. Application No. 12/695,020

SAMSUNG-1034 U.S. Application No. 12/694,445

SAMSUNG-1035 U.S. Application No. 12/694,451

SAMSUNG-1036 U.S. Application No. 12/694,455

SAMSUNG-1037 U.S. Application No. 12/695,980

SAMSUNG-1038 U.S. Application No. 12/695,021

SAMSUNG-1039 U.S. Application No. 12/380,780

SAMSUNG-1040 U.S. Application No. 12/380,778

SAMSUNG-1041 U.S. Patent Publication No 2006/0149811 ("Bennett")

SAMSUNG-1042 U.S. Patent Publication No. 2012/0117478 ("Vadde")

SAMSUNG-1043 U.S. Patent No. 8,429,516 ("Riggs")

SAMSUNG-1044 EP Patent Publication No. 1 850 575 A1 ("Rybak")

SAMSUNG-1045 U.S. Patent Publication No. 2004/0260630 ("Benco")

SAMSUNG-1046 U.S. Patent No. 6,578,077 ("Rakoshitz")

SAMSUNG-1047 U.S. Patent Publication No. 2006/0223495 ("Cassett")

SAMSUNG-1048 U.S. Patent Publication No. 2008/0080458 ("Cole")

SAMSUNG-1049 U.S. Patent Publication No. 2008/0209451 ("Michels")

SAMSUNG-1050 U.S. Patent Publication No. 2006/0039354 ("Rao")

SAMSUNG-1051-1052 RESERVED

SAMSUNG-1053 U.S. Provisional Application No. 61/435,564

SAMSUNG-1054 U.S. Patent No. 6,754,470 ("Hendrickson")

SAMSUNG-1055 U.S. Patent Publication No. 2002/0056126 ("Srikantan")

SAMSUNG-1056 Newton's Telecom Dictionary, 24th Edition

SAMSUNG-1057 Webster's New World, Telecom Dictionary

SAMSUNG-1058 Wiley Electrical and Electronics Engineering (IEEE) Dictionary

SAMSUNG-1059 The Authoritative Dictionary of IEEE Standards Terms

SAMSUNG-1060 Memorandum, Interim Procedure for Discretionary Denials in AIA Post-Grant Proceedings with Parallel District Court Litigation (USPTO June 21, 2022) ("Director's Guidance")

SAMSUNG-1061 Samsung Stipulation letter regarding IPR grounds in District court litigation.

SAMSUNG-1062 U.S. Patent Publication No. US 2008/0122796 ("Jobs")

SAMSUNG-1063 U.S. Patent Publication No. US 2010/0017506 ("Fadell")

SAMSUNG-1064 Federal Court Management Statistics (December 31, 2023)

Claim 1	
[1.pre]	A wireless end-user device, comprising:
[1.1]	a wireless modem configurable to connect to a wireless network;
[1.2]	a network stack configurable to receive and transmit data via the wireless modem and the wireless network;
[1.3]	a first network stack Application Programming Interface (API), containing at least one first call accessible to each of a plurality of device applications, the first network stack API callable by each of the plurality of device applications to open and use data packet flows via the network stack, the wireless modem, and the at least one wireless network;
[1.4]	a second API containing at least one second call accessible to each of the plurality of device applications, the second API callable by each of the plurality of device applications to make a data transfer request for a media object associated with a network resource identifier supplied by the calling device application;
[1.5]	a media service manager prompted by the second call, to manage network data transfers for the media object by interfacing with the network stack to retrieve the media object associated with the network resource identifier via the wireless modem and the wireless network; and
[1.6]	one or more service classification and measurement agents to associate wireless network data usage for the media object network data transfers with the device application that requests the data transfer for the media object, to associate wireless network data usage for respective data packet flows opened and used via the first network stack API with the device application opening such respective data packet flow, and to reconcile wireless network data usage for each of the plurality of device applications to track an aggregate wireless network data usage attributable to each of the plurality of device applications via both the first network stack API and the second API.
Claim 2	
[2]	The wireless end-user device of claim 1, wherein to associate wireless network data usage for the media object network data transfers with the device application that makes the data transfer request for

	the media object comprises to identify at least one of an application name, an application identifier, or a process identifier for the application that makes the data transfer request.
Claim 3	
[3]	The wireless end-user device of claim 2, wherein the data transfer request comprises a network resource identifier that identifies a source of the data to be transferred, a proxy to the source of the data to be transferred, or the media object to be transferred, in particular, wherein the network resource identifier comprises one or more of an Internet Protocol address, a Uniform Resource Locator, a remote file name/address, a stream name, and an object name.
Claim 4	
[4]	The wireless end-user device of claim 3, wherein to associate wireless network data usage for the media object network data transfers with the device application that makes the data transfer request for the media object further comprises to store an entry comprising the at least one of the application name, the application identifier, or the process identifier for each of the device applications that makes a data transfer request, each stored entry further comprising information about the corresponding network resource identifier for the data transfer request.
Claim 5	
[5]	The wireless end-user device of claim 4, wherein the one or more service classification and measurement agents includes a requesting application storing function within the media services manager.
Claim 6	
[6]	The wireless end-user device of claim 5, wherein the media service manager is a first media service manager and the requesting application storing function is a first requesting application storing function, the device further comprising a second media service manager of a different type than the first media service manager, the service classification agent including a second requesting application storing function within the second media service manager.

Claim 7	
[7]	The wireless end-user device of claim 6, further comprising a usage and classification database, the one or more service classification and measurement agents to receive application association information stored by the first and second requesting application storing functions, and to maintain the usage and classification database based in part on the received application association information.
Claim 8	
[8]	The wireless end-user device of claim 3, wherein to manage network data transfers for the media object by interfacing with the at least one network stack comprises to map the data transfer request and network resource identifier to one or more data flow connections communicated through the device network stack.
Claim 9	
[9]	The wireless end-user device of claim 1, further comprising a media player and a user interface, wherein the media object comprises media data that is, as a result of the media service manager management of network data transfers for the media object, received by the device and played by the media player through the user interface.
Claim 10	
[10.1]	The wireless end-user device of claim 9, the media service manager to receive, from the application launching the data transfer request, a network resource indicator that identifies the media object,
[10.2]	return to the application a media object handle descriptor,
[10.3]	call a proxy service to perform one or more network data transfers comprising the media object,
[10.4]	accept, from the application, commands associated with the media object handle descriptor, and
[10.5]	control playback of the media data by the media player based on the commands.

Claim 11	
[11.1]	The wireless end-user device of claim 1, wherein the one or more service classification and measurement agents comprise: a requesting application storage agent to, for each device application that makes a data transfer request using the second API, store application identification information and network resource identification information;
[11.2]	a network data flow storage agent to, for each network data flow associated with the media service manager, identify network data flow identification information; and
[11.3]	an association agent to match the network data flow identification information for a network data flow with application identification information for the network data transfer associated with the network data flow.
Claim 12	
[12.1]	The wireless end-user device of claim 1, further comprising: a local database to store data usage, including data usage for network data transfers managed by the media service manager on behalf of a device application, the stored data usage classified by device application;
[12.2]	a user interface; and
[12.3]	a user interface display agent to display the data usage classified by application to a user.
Claim 13	
[13]	The wireless end-user device of claim 1, the one or more service classification and measurement agents to further associate one or more traffic flows, comprising the media object network data transfers, with the device application that makes the data transfer request, the device further comprising an enforcement agent to, based on the association between the one or more traffic flows and the device application, enforce an application-based usage control on network data usage by one or more of the device applications.

Claim 14	
[14.pre]	A method of operating a wireless end-user device when connected via a wireless modem to a wireless network, the method comprising:
[14.1]	operating a first network stack Application Programming Interface (API), containing at least one first call accessible to each of a plurality of device applications, the first network stack API callable by each of the plurality of device applications to open and use data flows via a network stack coupled to the wireless modem;
[14.2]	operating a second API containing at least one second call accessible to each of the plurality of device applications, the second API callable by each of the plurality of device applications to make a data transfer request for a media object associated with a network resource identifier supplied by the calling device application;
[14.3]	operating a media service manager prompted by the second call, the media service manager managing network data transfers for the media object by interfacing with the network stack to retrieve the media object associated with the network resource identifier via the wireless modem and the wireless network; and
[14.4]	associating wireless network data usage for the media object network data transfers with the device application that requests the data transfer for the media object, associating wireless network data usage for respective data packet flows opened and used via the first network stack API with the device application opening such respective data packet flow, and reconciling wireless network data usage for each of the plurality of device applications to track an aggregate wireless network data usage attributable to each of the plurality of device applications via both the first network stack API and the second API.
Claim 15	
[15.pre]	A wireless end-user device, comprising:
[15.1]	a wireless modem configurable to connect to a wireless network;
[15.2]	a network stack configurable to receive and transmit data via the wireless modem and the wireless network;
[15.3]	a first network stack Application Programming Interface (API), containing at least one first call to allow device applications to open and

	use data flows via the network stack, the wireless modem, and the at least one wireless network;
[15.4]	a second API containing at least one second call to allow device applications to make a data transfer request for a media object associated with a network resource identifier supplied by the device application, wherein the data transfer request comprises a network resource identifier that identifies a source of the data to be transferred, a proxy to the source of the data to be transferred, or the media object to be transferred in particular, wherein the network resource identifier comprises one or more of an Internet Protocol address a Uniform Resource Locator, a remote file name/ address, a stream name, and an object name;
[15.5]	a media service manager prompted by the second call, to manage network data transfers for the media object by interfacing with the network stack to retrieve the media object associated with the network resource identifier via the wireless modem and the wireless network and
[15.6]	a service classification agent to associate wireless network data usage for the media object network data transfers with the device application that requests the data transfer for the media object, wherein to associate data usage for the media object network data transfers with the device application that makes the data transfer request for the media object comprises to identify and store at least one of an application name, an application identifier, or a process identifier for the application that makes the data transfer request, each stored entry other comprising information about the corresponding network resource identifier for the data transfer request.
Claim 16	
[16]	The wireless end-user device of claim 15, wherein the service classification agent includes a requesting application storing function within the media services manager.
Claim 17	
[17]	The wireless end-user device of claim 16, wherein the media service manager is a first media service manager and the requesting application storing function is a first requesting application storing function, the device further comprising a second media service manager of a different type than the first media service manager, the service

	classification agent including a second requesting application storing function within the second media service manager.
Claim 18	
[18]	The wireless end-user device of claim 17, further comprising a usage and classification reconciliation agent and usage and classification database, the usage and classification reconciliation agent to receive application association information stored by the first and second requesting application storing functions, and to maintain the usage and classification database based in part on the received application association information.
Claim 19	
[19.pre]	A wireless end-user device, comprising:
[19.1]	a wireless modem configurable to connect to a wireless network;
[19.2]	a network stack configurable to receive and transmit data via the wireless modem and the wireless network;
[19.3]	a first network stack Application Programming Interface (API), containing at least one first call to allow device applications to open and use data flows via the network stack, the wireless modem, and the at least one wireless network;
[19.4]	a second API containing at least one second call to allow device applications to make a data transfer request for a media object associated with a network resource identifier supplied by the device application, wherein the data transfer request comprises a network resource identifier that identifies a source of the data to be transferred, a proxy to the source of the data to be transferred, or the media object to be transferred in particular, wherein the network resource identifier comprises one or more of an Internet Protocol address a Uniform Resource Locator, a remote file name/ address, a stream name, and an object name;
[19.5]	a media service manager prompted by the second call, to manage network data transfers for the media object by interfacing with the network stack to retrieve the media object associated with the network resource identifier via the wireless modem and the wireless network wherein to manage network data transfers for the media object by interfacing with the at least one network stack comprises to

	map the data transfer request and network resource identifier to one or more data flow connections communicated through the device networking stack and
[19.6]	a service classification agent to associate wireless network data usage for the media object network data transfers with the device application that requests the data transfer for the media object, wherein to associate data usage for the media object network data transfers with the device application that makes the data transfer request for the media object comprises to identify at least one of an application name, an application identifier, or a process identifier for the application that makes the data transfer request.

Samsung Electronics Co., Ltd. ("Petitioner" or "Samsung") petitions for *Inter Partes* Review ("IPR") of claims 1-19 ("the Challenged Claims") of U.S. Patent No. 9,647,918 ("the '918 Patent"). Compelling evidence presented in this Petition demonstrates at least a reasonable likelihood that Samsung will prevail with respect to at least one of the Challenged Claims.

I. REQUIREMENTS FOR IPR

A. Grounds for Standing

Petitioner certifies that the '918 Patent is available for IPR. This petition is being filed within one year of service of a complaint against Samsung. Samsung is not barred or estopped from requesting review of the Challenged Claims on the below-identified grounds.

B. Challenge and Relief Requested

Petitioner requests an IPR of the Challenged Claims on the grounds noted below. Dr. Traynor provides supporting testimony in his Declaration. SAMSUNG-1003, ¶¶1-117.

Ground	Claim(s)	35 U.S.C. § 103
1A	1-3, 8-9, 13-14, 19	Obvious over Bennett in view of Vadde
1B	4-6, 11, 15-17	Obvious over Bennett in view of Vadde and Riggs
1C	7, 12, 18	Obvious over Bennett in view of Vadde, Riggs, and Hendrickson

Ground	Claim(s)	35 U.S.C. § 103
1D	10	Obvious over Bennett in view of Vadde, Riggs, and Srikantan

C. Claim Construction

Petitioner submits that no formal claim constructions are necessary because "claim terms need only be construed to the extent necessary to resolve the controversy." *Wellman, Inc. v. Eastman Chem. Co.*, 642 F.3d 1355, 1361 (Fed. Cir. 2011); SAMSUNG-1003, ¶23. Petitioner reserves the right to respond to any constructions offered by Patent Owner or adopted by the Board. Petitioner is not conceding that each challenged claim satisfies all statutory requirements, nor is Petitioner waiving any arguments concerning claim scope or grounds that can only be raised in district court. For this petition, Petitioner applies prior art in a manner consistent with Patent Owner's allegations of infringement before the district court.

D. Level of Ordinary Skill in the Art

A person of ordinary skill in the art ("POSITA") relating to the subject matter of the '918 Patent would have had (1) at least a bachelor's degree in computer science, computer engineering, electrical engineering, or a related field, and (2) at least two years of industry experience in wireless communication network applications and software. SAMSUNG-1003, ¶¶21-22. Additional graduate education could substitute for professional experience, and *vice versa*. *Id*.

II. THE '918 PATENT

A. Brief Description

The '918 Patent is directed to "a wireless end-user device" that includes a "proxy network service manager" (also referred to as a "proxy") that facilitates media requests from resident applications. SAMSUNG-1001, Abstract, 71:21-42, 110:12-111:17, 119:49-60, FIGS. 30, 35. In an example embodiment depicted in FIG. 30, the application "utilizes an API to trigger the proxy 3012 which in turn passes through a socket connection at the socket 3016 as traffic." *Id*., 110:46-53. FIG. 35 depicts another example embodiment that includes "a proxy service manager 3502," a "proxy/library API 3504," a "stack API 3518," and a "usage/classification reconciliation engine 3526." *Id*., 119:49-60. The '918 Patent describes that example "stack API level … requests" are "socket open/send requests." *Id*., 93:33-36; SAMSUNG-1003, ¶24.

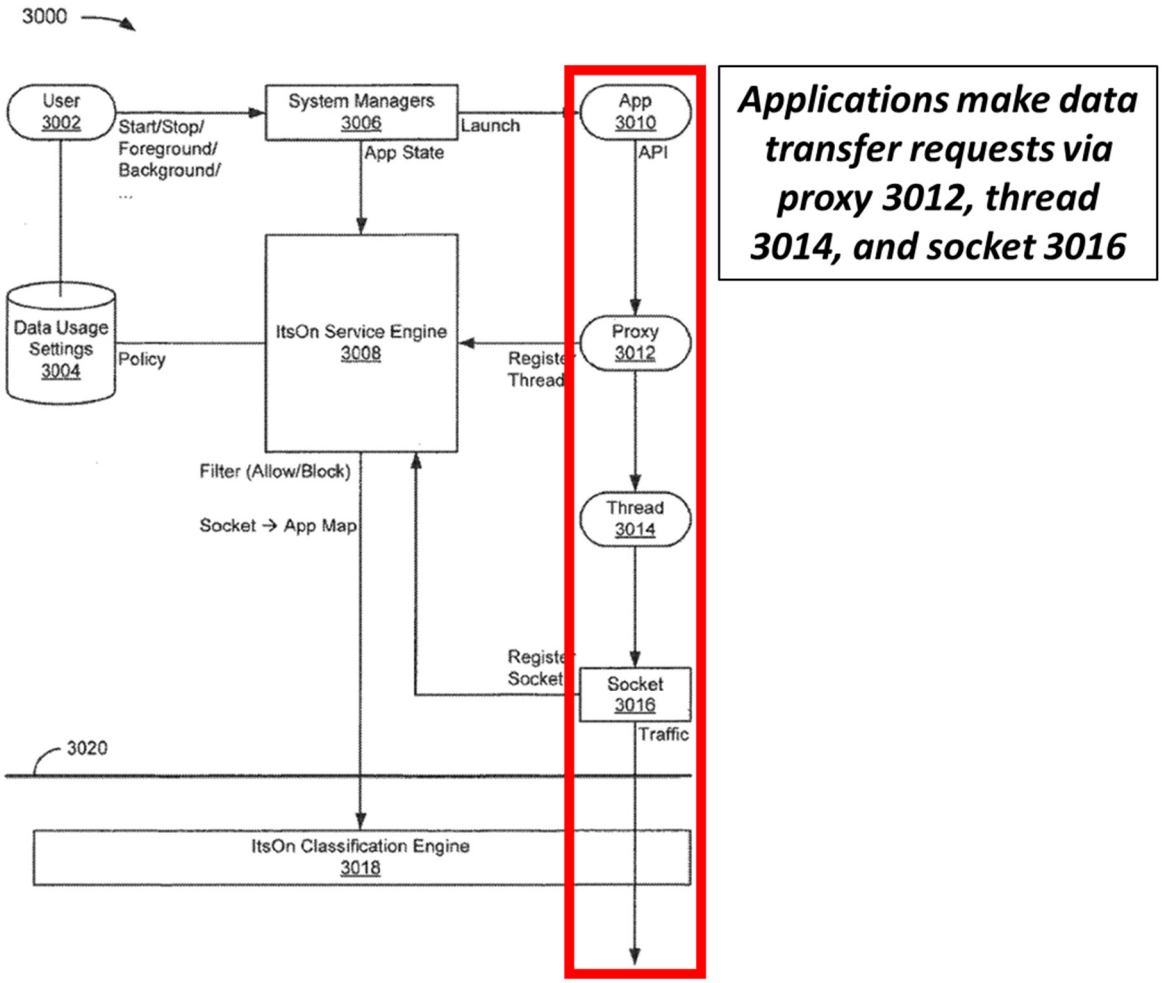

FIG. 30

SAMSUNG-1001, FIG. 30[1].

[1] Annotations to figures are shown in color.

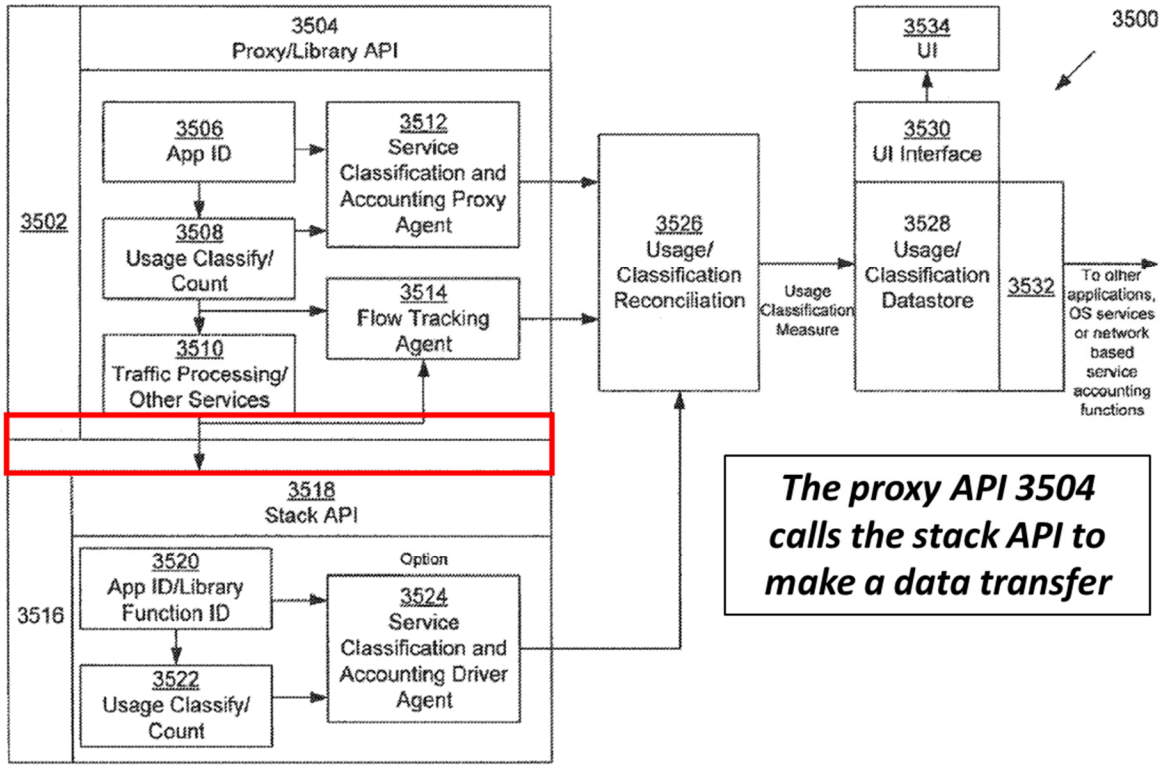

FIG. 35

SAMSUNG-1001, FIG. 35.

B. Prosecution History

The Examiner issued only one office action during the '918 Patent's prosecution, including prior art rejections of claims 2-4, 11, and 13-16 (issued claims 1-2, 9, and 11-14) under §102 over Deu-Ngoc (US 8,402,165), and a rejection of claim 5 (issued claim 3) under §103 over Deu-Ngoc in view of Constantinof (US 2014/0241342). SAMSUNG-1002, 381-390. The Examiner also indicated that claims 6-10 and 12 (issued claims 4-8 and 10) were allowable. *Id*. The applicant amended the claims to overcome the above rejections and added new claims 17-21

(issued claims 15-19). SAMSUNG-1002, 99-112. All claims were then allowed. SAMSUNG-1002, 21-25; SAMSUNG-1003, ¶25.

C. Critical Date of the '918 Patent

As an initial matter, Patent Owner has advanced a Critical Date of Jan. 24, 2011 for the '918 Patent in co-pending litigation. SAMSUNG-1005, 11-12. Petitioner submits that this Critical Date should be used for this IPR proceeding to maintain consistency with the District Court. *Id*. Petitioner additionally provides analysis below confirming that the Critical Date of the '918 Patent is no earlier than Jan. 24, 2011. *Id*.

Under 35 U.S.C. §119(e), a patent application may rely on the filing date of a provisional application ***only if*** one or more claims have written description support in the provisional application. *Dynamic Drinkware, LLC v. Nat'l Graphics, Inc*., 800 F.3d 1375, 1378 (Fed. Cir. 2015). The provisional application must "contain a written description of the invention and the manner and process of making and using it, in such full, clear, concise, and exact terms" (35 U.S.C. §112, ¶1)[2]

[2] *SAP Am., Inc. v. Pi-Net Int'l, Inc.,* IPR No. 2014-00414, Paper No. 11, 11-14 (PTAB Aug. 18, 2014) (relying on § 112 case law is proper in an *inter partes* review to establish effective filing date).

to enable a POSITA to practice the invention claimed in the non-provisional application. *Id*.

Additionally, in order to rely on the filing date of an earlier application, 35 U.S.C. § 120 requires that the earlier application include a disclosure that complies with the written description requirement of 35 U.S.C. § 112. *Lockwood v. Am. Airlines, Inc.*, 107 F.3d 1564, 1571-72 (Fed. Cir. 1997). To comply with the written description requirement, the specification "must describe the inventions sufficiently to convey to a person of skill in the art that the patentee had possession of the claimed invention at the time of the application, i.e., that the patentee invented what is claimed." *Lizardtech, Inc. v. Earth Res. Mapping Inc.,* 424 F.3d 1336, 1345 (Fed. Cir. 2005)

In evaluating whether a disclosure provides a sufficient written description, the Federal Circuit has held that "one cannot disclose a forest in the original application, and then later pick a tree out of the forest and say here is my invention. In order to satisfy the written description requirement, **the blaze marks directing the skilled artisan to that tree must be in the originally filed disclosure**." *Purdue Pharma*, 230 F.3d at 1326-1327 (emphasis added); *see also Indivior UK Limited v. Dr. Reddy's Laboratories S.A.*, 18 F.4th 1323, 1328-29 (2021).

Under 35 U.S.C. §112, ¶1, an applicant must "convey with reasonable clar-

ity to those skilled in the art that, as of the filing date sought, he or she was in possession of the invention." *Vas–Cath Inc. v. Mahurkar*, 935 F.2d 1555 (Fed.Cir.1991). The test for written description is an objective inquiry into the four corners of the specification from the perspective of a POSITA. *Ariad Pharm., Inc. v. Eli Lilly & Co*., 598 F.3d 1336 (Fed. Cir. 2010). "Entitlement to a filing date does not extend to subject matter which is not disclosed, but would be obvious over what is expressly disclosed." *In re Huston, 308 F.3d 1267* (Fed. Cir. 2002). The written description requirement is not satisfied if the disclosure would lead one to speculate as to "modifications that the inventor might have envisioned, but failed to disclose." *In re Jones*, 10 F. App'x 822 (Fed. Cir. 2001).

None of the Challenged Claims are entitled to the filing date of any of U.S. Provisional Application Nos. 61/264,126, 61/270,353, 61/275,208, 61/237,753, 61/264,120, 61/348,022, 61/381,159, 61/381,162, 61/384,456, 61/389,547, 61/385,020, 61/387,243, 61/387,247, 61/407,358, 61/418,507, 61/418,509, 61/420,727, 61/422,565, 61/422,572, 61/422,574, 61/252,151, 61/252,153, 61/206,354, 61/206,944, 61/207,393, and 61/207,739 (collectively the pre-Jan. 24, 2011 provisionals) or U.S. Application Nos. 12/695,019, 12/695,020, 12/694,445, 12/694,451, 12/694,455, 12/695,980, 12/695,021, 12/380,780, and 12/380,778 (collectively the pre-Jan. 24, 2011 applications) because claims 1-19 do not have written description support in these applications. *Falko-Gunter Falkner v. Inglis*,

448 F.3d 1357 (Fed. Cir. 2006); SAMSUNG-1006-1040.

Claims 1, 14, 15, and 19 recite features relating to a "first network stack Application Programming Interface (API), containing at least one first call … callable by [(or "to allow")] each of [a] plurality of device applications to open and use data packet flows," a "second API containing at least one second call … callable by [(or "to allow")] each of the plurality of device applications to make a data transfer request for a media object," and "a media service manager prompted by the second call, to manage network data transfers for the media object." Additionally, claims 5-7 and 16-18 recite a "requesting application storing function." These features are found nowhere in the pre-Jan. 24, 2011 provisionals or pre-Jan. 24, 2011 applications to which the '918 Patent claims priority. Nothing in the pre-Jan. 24, 2011 provisionals or pre-Jan. 24, 2011 applications shows the inventor possessed and enabled the specific API techniques, media service manager, or application activity storage techniques recited in the above claims. SAMSUNG-1006-1040. Because all claims of the '918 Patent depend on these features in some way, none of the claims of the '918 Patent are entitled to priority before Jan. 24, 2011. SAMSUNG-1001, Claims 1-19.

The introduction of these features into the claims resulted in the '918 Patent's claims not being entitled to any of the filing dates of the pre-Jan. 24, 2011 provisionals and pre-Jan. 24, 2011 applications. At most, the claims of the '918

Patent are entitled to the filing date of January 24, 2011—the filing date of provisional application 61/435,564 ("the '564 provisional") where these features first appear—consistent with what Patent Owner has proposed in the co-pending litigation. SAMSUNG-1005, 11-12; SAMSUNG-1006-1040. For example, the '564 provisional included disclosure that clearly corresponds to the added disclosure within the '918 Patent, including a system diagram that correlates to FIG. 35 of the '918 Patent, and a description of a "proxy service manager" (a "media service manager"). SAMSUNG-1053, 8, 15. This disclosure does not appear in any of the pre-Jan. 24, 2011 provisionals or pre-Jan. 24, 2011 applications, making the '564 provisional the first application where this subject matter was introduced. SAMSUNG-1006-1040, 1053.

Page 15 of the '564 provisional (left) appears to depict FIG. 35 of the '918 patent (right)

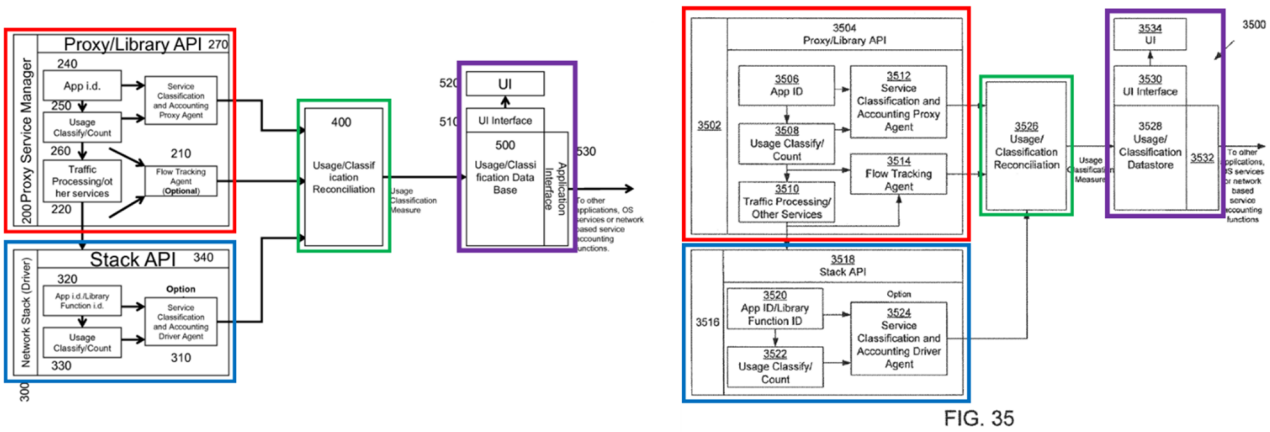

FIG. 35

SAMSUNG-1053, 15 (left) compared to SAMSUNG-1001, FIG. 35 (right).

Proxy Service Manager

- In some embodiments, a proxy network service manager refers to an intermediary data flow function in a device operating system that sits on a data path between a device application and a device networking stack interface to provide a level of network service abstraction from the network stack interface, a higher level service function above the network stack interface, enhanced or special traffic processing functions, media service transfer management, file download service, HTTP proxy service functions, QoS differentiation, or other similar or related higher level traffic processing.
- Example Proxy Service Managers include the following: media service manager (e.g. android media service library function), email service manger, DNS function, software download service manager, media download manager, data download service manager, Android "media" library function, Android.net library function, Jave.net library function, Apache library function, other similar software/library functions or services in other device operating systems, SMTP/IMAP/POP proxy, HTTP proxy, IM proxy, VPN service manager, SSL proxy, etc.

The '564 provisional introduced the "media service manager"

SAMSUNG-1053, 8.

As shown in the table below, all references presented in this Petition pre-date January 24, 2011 and, thus, constitute prior art.

Reference	Filing Date	Publication Date
US 2006/0149811 (Bennett)	Apr. 26, 2005	Jul. 6, 2006
US 2012/0117478 (Vadde)	Nov. 9, 2010	May 10, 2012
US 8,429,516 (Riggs)	Aug. 20, 2007	Apr. 23, 2013
US 6,754,470 (Hendrickson)	Aug. 31, 2001	Jun. 22, 2004
US 2002/0056126 (Srikantan)	Apr. 6, 2001	May 9, 2002

III. THE CHALLENGED CLAIMS ARE UNPATENTABLE

A. [GROUND 1A] – Bennett and Vadde render claims 1-3, 8-9, 13-14, and 19 obvious

1. Overview of Bennett

Bennett discloses a "media client" including a "user agent to communicate with a multimedia application in the networked communication device," a "signaling agent … to establish and maintain communication sessions," and a "media agent" which "performs media operations." SAMSUNG-1041, Abstract, ¶¶[0024]-[0026], [0029]-[0031], FIG. 3. These media operations include "Push-to-Talk over Cellular (PoC), presence and Instant Messaging (IM), video and audio streaming, voice over IP videoconferencing, interactive gaming, white-boarding and content sharing." SAMSUNG-1041, ¶[0024]. Bennett discloses that its media client is implemented in a "mobile device" that includes "a [user agent] 202, [signaling agent] 204 and [media agent] 206." SAMSUNG-1041, ¶¶[0028], [0078]. Bennett's media agent "stream[s]" media to a "media player" on the device, which outputs the media to the user using "a local media rendering device (e.g., speaker and/or display of a mobile terminal 100)." SAMSUNG-1041, ¶¶[0025], [0076], FIG. 3. Additionally, Bennett discloses that media can also be routed directly to the application. ¶[0076], FIG. 10; SAMSUNG-1003, ¶26.

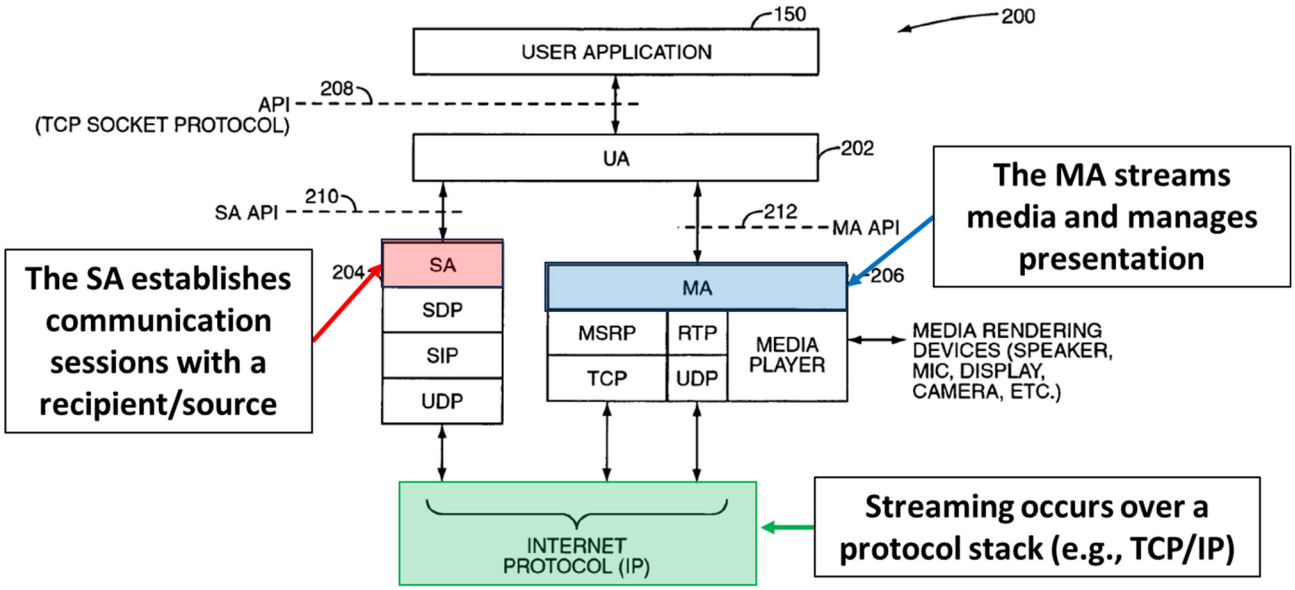

FIG. 3

SAMSUNG-1041, FIG. 3.

2. Overview of Vadde

Vadde discloses techniques for "managing data traffic" for a plurality of applications operating on a "computing device 102." SAMSUNG-1042, ¶¶[0009]-[0023]. Vadde uses a "policy" based system that enforces restrictions on application data usage based on "attributes" and "usage limits." SAMSUNG-1042, ¶¶[0015]-[0016], [0025]-[0026]. Vadde's techniques are applied for "each" application and are enforced with a "restrictor component 122" which "appl[ies] the data usage policy" and "monitors the data transmitted and/or received by the applications 110 and determines whether the data usage limits 116 corresponding to each of the applications 110 have been exceeded or are about to be exceeded."

SAMSUNG-1042, ¶¶[0016], [0022]. An example computing device is depicted below. SAMSUNG-1042, FIG. 1; SAMSUNG-1003, ¶27.

FIG. 1

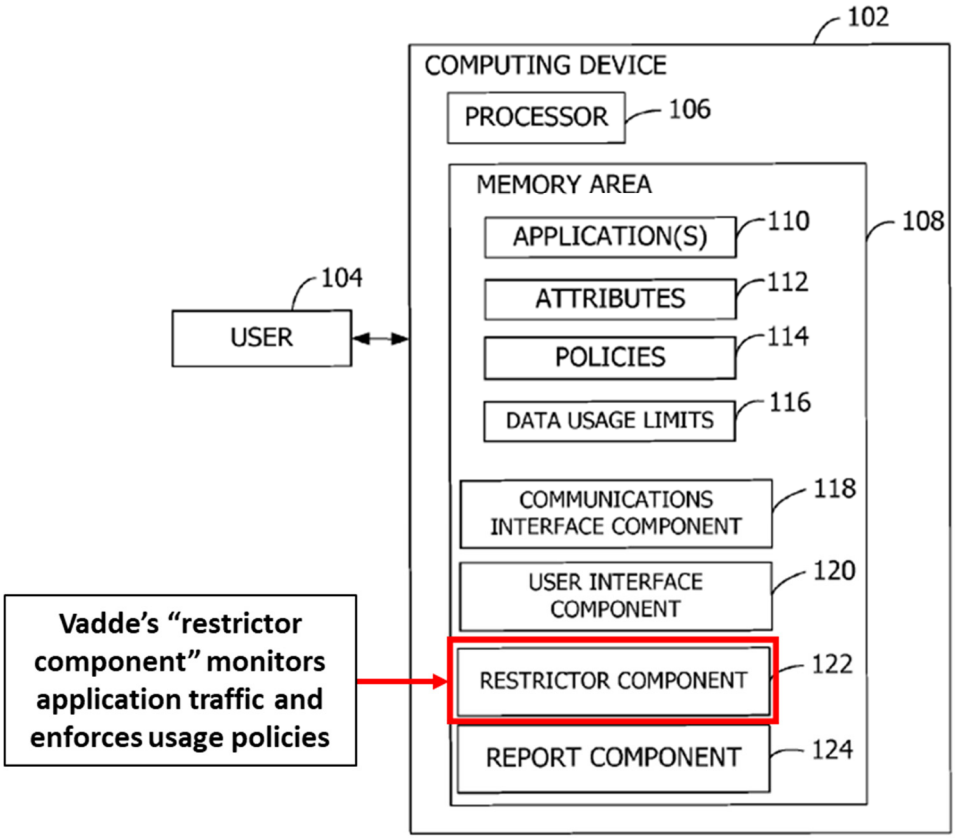

SAMSUNG-1042, FIG. 1.

3. The combination of Bennett and Vadde

It would have been obvious for a POSITA to incorporate Vadde's techniques of managing data traffic—to include Vadde's policies and restrictor component—into the media clients of Bennett to monitor data usage for applications making "media object network data transfers" and using "respective data packet flows."

SAMSUNG-1041, ¶[0078]; SAMSUNG-1042, ¶¶[0010], [0022]. Dr. Traynor notes that a POSITA would have been motivated to make this combination for multiple reasons. SAMSUNG-1003, ¶28.

First, as Vadde notes, "[t]he cost of mobile operator data plans is often based on usage" and "with existing systems, users are unable to determine the relative costs incurred by different applications executing on a mobile telephone." SAMSUNG-1003, ¶29; SAMSUNG-1042, ¶[0001]. Incorporating Vadde's data usage monitoring into the Bennett device would have enabled the user of the Bennett device to monitor their data usage and avoid unforeseen expenses. *Id*. The ability to identify and restrict data-intensive applications would have also allowed a user and network provider to "reduce battery usage" caused by these applications, extending operating time between charging. SAMSUNG-1042, ¶¶[0009], [0023]-[0024]; SAMSUNG-1003, ¶29.

Indeed, as Dr. Traynor explains, the benefits of data usage monitoring were well-known prior to the '918 Patent and would have been part of a POSITA's general knowledge. SAMSUNG-1003, ¶30. For example, Rybak corroborates the need to monitor data usage and discloses a "method for monitoring resource usage of a mobile communications device" with respect to a "mobile communication plan profile associated with a subscriber." SAMSUNG-1044, ¶¶[0003]-[0004], [0030]-[0042], [0047], FIGS. 2, 7. Benco discloses another example of a "method

for providing mobile telephone subscribers with data on accumulated usage" where "[s]ubscribers are warned if their accumulated usage threatens to exceed or exceeds the allowable basic usage of their billing plan." SAMSUNG-1045, Abstract, ¶¶[0001]-[0020]. Jobs provides another example, where a user interface of a mobile device "displays an updated account usage metric for an account associated with usage of the device (e.g., a cellular phone account)." SAMSUNG-1062, ¶[0213]. Fadell is yet another example of "metering" network resource usage on a mobile device to prevent a user from exceeding a "resource allocation." SAMSUNG-1063, ¶¶[0002]-[0007], [0017], [0050]-[0053], [0056]. With this background and knowledge of the benefits of data usage monitoring, a POSITA would have been motivated to consider and include Vadde's data usage monitoring in Bennett's device. SAMSUNG-1003, ¶30.

Second, because Vadde's policies are applied at an application level, Vadde's techniques would have enabled the Bennett service providers greater control over specific application activity that was data-intensive for the network (e.g., streaming video while roaming). SAMSUNG-1003, ¶31; SAMSUNG-1042, ¶¶[0010], [0016], [0018], [0022], [0025], [0029]-[0030], [0032]. These restrictions would have enabled service providers to prevent an aggregation of data-intensive activity from degrading a network's effectiveness. *Id*. Moreover, as Dr. Traynor

explains, "roaming" could also be extremely financially costly for the user, particularly for high-bandwidth activities like streaming, and was typically avoided if possible. SAMSUNG-1042, ¶[0034]; SAMSUNG-1046, 7:40-50, 14:61-67, Table-2 (describing "real-time audio and video" applications as "[h]igh bandwidth" applications); SAMSUNG-1003, ¶31.

Finally, adding per-application data usage monitoring to the Bennett device would have enabled device manufacturers and service providers to incorporate additional applications and functionality into wireless devices while allowing users to retain control of aggregate device data usage. SAMSUNG-1003, ¶32; SAMSUNG-1042, ¶¶[0010], [0016], [0018], [0022], [0025], [0029]-[0030], [0032]. Indeed, Bennett acknowledges that "[t]he convergence of mobile and IP networks will allow service providers to offer new IP services to mobile subscribers that were previously available only to users in fixed networks, such as the Internet." SAMSUNG-1041, ¶[0002]. Vadde's techniques would have allowed service providers to incorporate the "new IP services" described by Bennett while retaining control of device wireless data usage in higher-cost wireless networks. SAMSUNG-1041, ¶[0002]; SAMSUNG-1042, ¶¶[0010], [0016], [0018], [0022], [0025], [0029]-[0030], [0032]; SAMSUNG-1003, ¶32.

Incorporating Vadde's techniques into the Bennett device would have been nothing more than the application of known techniques (e.g., managing data traffic

according to Vadde) to a known structure (e.g., Bennett's devices) to yield predictable results (e.g., the management of the Bennett-Vadde device's data traffic). *KSR Int'l Co. v. Teleflex Inc*., 550 U.S. 398, 417 (2007). As Dr. Traynor explains, a POSITA would have expected success in implementing this combination because the monitoring of outgoing API data traffic on a mobile device (such as the UA, SA, and MA APIs of Bennett) was known as of the Critical Date and would have involved only routine programming skill. SAMSUNG-1003, ¶33. Rakoshitz corroborates Dr. Traynor's testimony and discloses a method for "monitoring or profiling quality of service within a network of computers" that includes a "policy engine module" that "interfaces with [an] API" to enforce a "traffic policy [that] defines specific limitations or parameters for the traffic." SAMSUNG-1046, Abstract, 9:18-24, 12:12-58, Claim 1. Michels provides another example of a system for "monitoring and control of access to [an] API" with a processor that "monitors the distribution of the API elements" and "the number of API requests made by [a] developer client over a period of time, the identity of the developer client, usage trends by the developer client, and usage trends based on IP address." SAMSUNG-1049, ¶¶[0002]-[0015], [0043]-[0063]. Furthermore, as explained above, tracking an aggregate application data usage on a mobile device was also known. SAMSUNG-1044, ¶¶[0003]-[0004], [0030]-[0042], [0047], FIGS. 2, 7; SAMSUNG-1045, Abstract, ¶¶[0001]-[0020]; SAMSUNG-1003, ¶33.

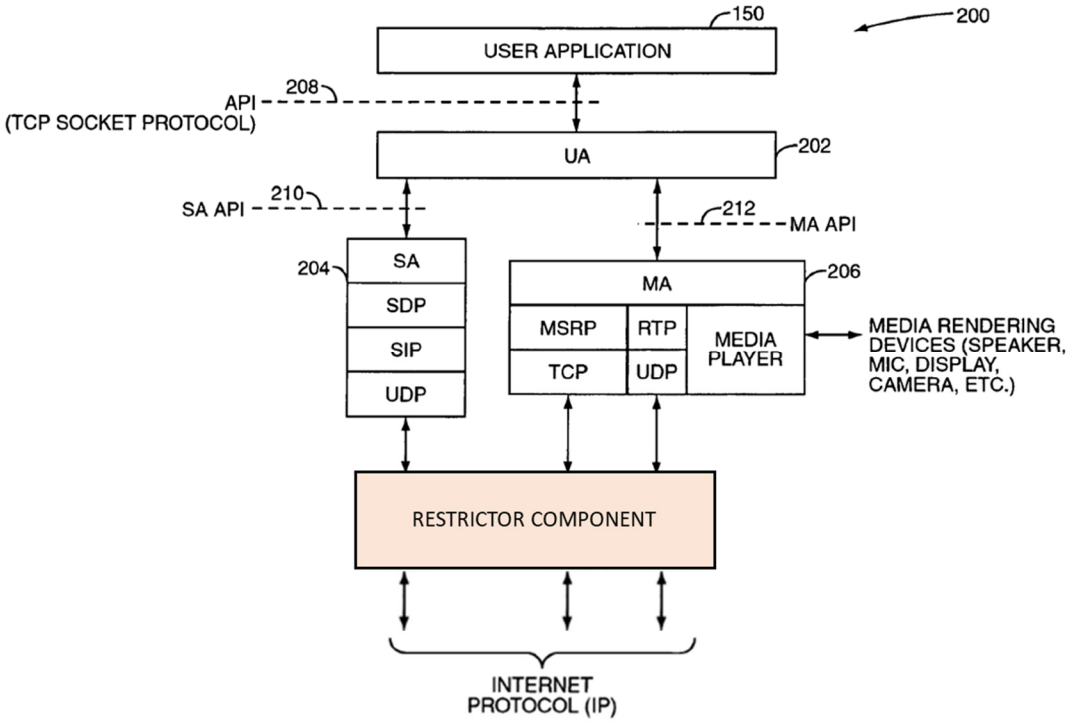

SAMSUNG-1041, FIG. 3 (as modified by Vadde).

4. Analysis

[1.pre]

As an initial matter, the '918 Patent does not define a "wireless end-user mobile device," but instead describes various devices that can implement its techniques, to include "**mobile devices**, such as phones, PDAs, computing devices, laptops, net books, tablets, **cameras**, **music/media players**, GPS devices, networked appliances, and any other networked device." SAMSUNG-1001, 40:28-46[3]; SAMSUNG-1003, ¶45.

To the extent the preamble is limiting, Bennett discloses that its techniques

[3] All emphasis is added unless otherwise noted.

can be implemented in a "mobile device," "video camera," and "remote video player" (all "***wireless end-user device[s]***" which communicate over wireless networks). SAMSUNG-1041, ¶¶[0078], *see also* ¶¶[0002], [0005], [0025], FIGS. 1, 4, 11; SAMSUNG-1003, ¶46.

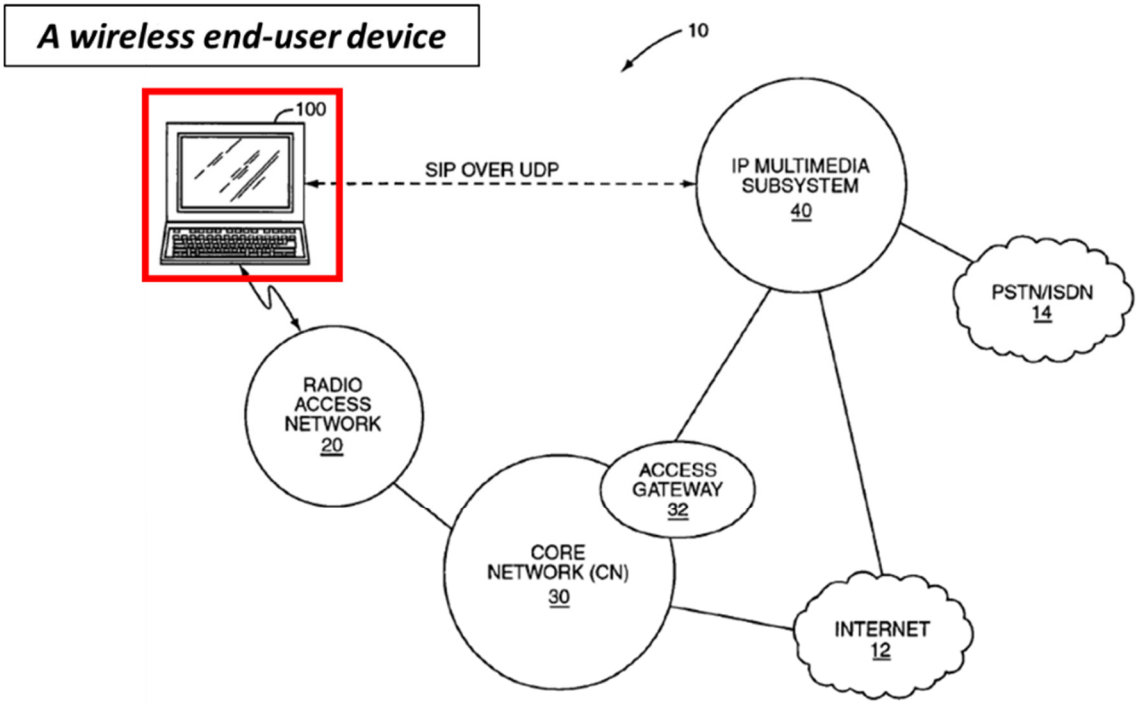

FIG. 1

SAMSUNG-1041, FIG. 1.

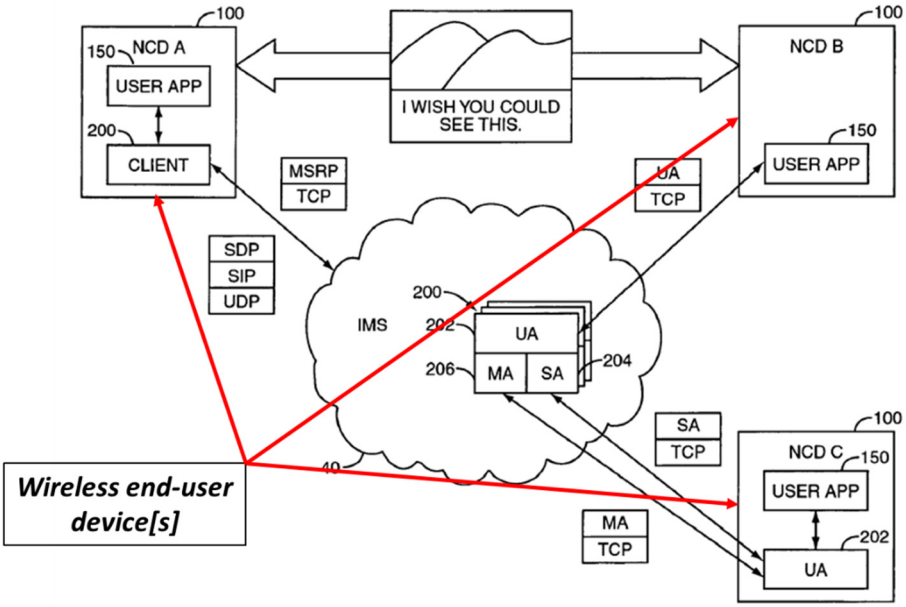

FIG. 4

SAMSUNG-1041, FIG. 4.

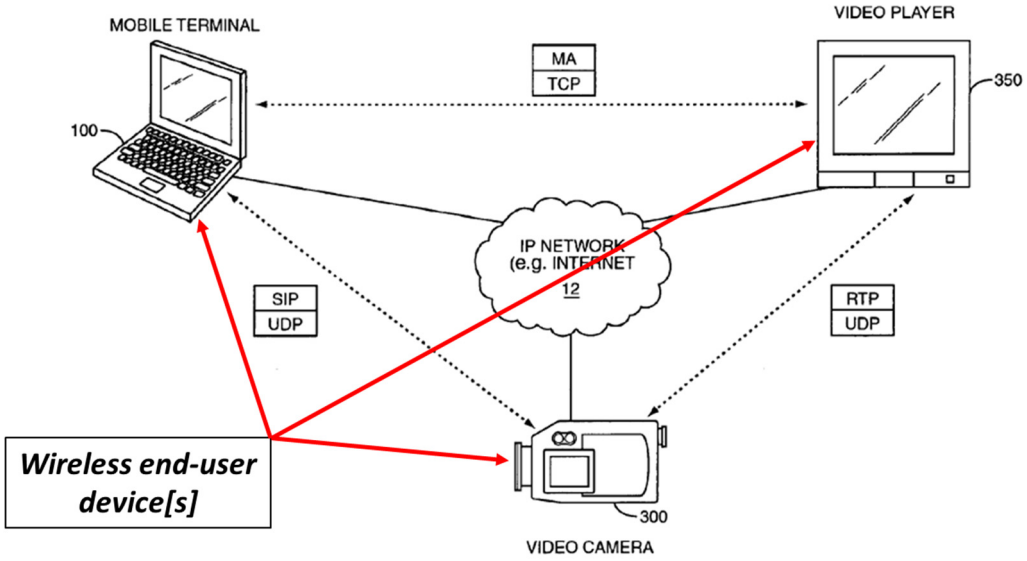

FIG. 11

SAMSUNG-1041, FIG. 11.

Bennett discloses a "media client 200" including a "user agent to communicate with a multimedia application in the networked communication device," a "signaling agent … to establish and maintain communication sessions," and a "media agent" which "performs media operations." SAMSUNG-1041, Abstract, ¶¶[0024]-[0026], [0029]-[0031], FIG. 3. Bennett's media client 200 is entirely contained within a "***wireless end-user device***." SAMSUNG-1041, ¶¶[0028], [0078], FIGS. 4, 11; SAMSUNG-1003, ¶47.

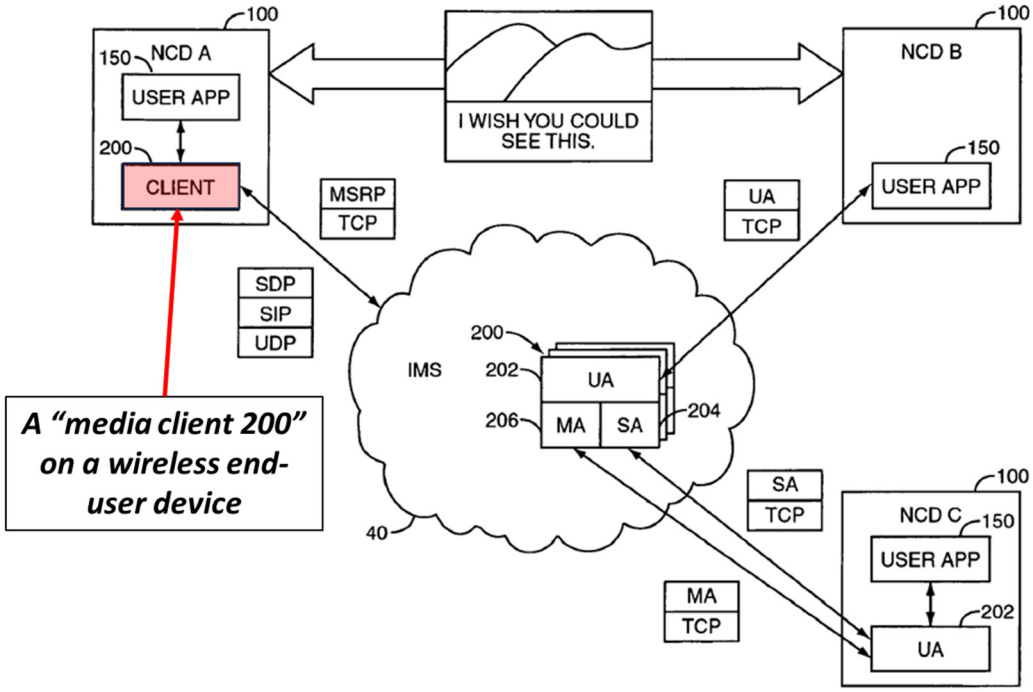

FIG. 4

SAMSUNG-1041, FIG. 4.

[1.1]

Bennett discloses that its mobile devices operate on various "mobile communication network[s]." SAMSUNG-1041, ¶[0017], FIG. 1; SAMSUNG-1003,

¶48. Bennett's networks include "General Packet Radio Services (GPRS) network[s]" and Universal Mobile Telecommunications Service ("UMTS") networks ("***wireless network[s]***"). *Id*.

As Dr. Traynor explains, a POSITA would have understood and found obvious that to communicate and retrieve media via these networks, Bennett's mobile devices would have had the ability to modulate and demodulate data using a "***wireless modem***." SAMSUNG-1003, ¶49. Indeed, it was well known before the Critical Date that ***wireless modem[s]*** were used to transmit data from mobile devices operating on wireless networks, including GPRS and UMTS networks, and that these modems were "***configurable to connect to a wireless network***." SAMSUNG-1047, ¶¶[0025], [0068]. Cassett corroborates Dr. Traynor's testimony and discloses that devices communicating in "GPRS" and "UMTS" networks included "wireless modems." *Id*.

Additionally, Dr. Traynor also explains that a POSITA would have understood and found obvious that mobile devices at the time of the Critical Date typically included ***wireless modem[s]*** that were "***configurable to connect to a wireless network***" as evidenced by multiple prior art references. SAMSUNG-1048, ¶¶[0034]-[0035], FIG. 2; SAMSUNG-1013, ¶¶[0125], [0130]; SAMSUNG-1003, ¶50. Indeed, Cole discloses a "mobile device" that includes a plurality of "***wireless modem[s]***," to include a "WWAN modem 230," a "WLAN modem 235," and a

"voice band modem 250." SAMSUNG-1048, ¶¶[0034]-[0035], FIG. 2. Rao discloses that "computing device[s] 102" included "network interface[s] 118," for example, a "modem." SAMSUNG-1050, ¶¶[0125], [0130].

[1.2]

Bennett discloses that the media agent 200 is in communication with several "protocol stack[s]" ("***a network stack***") which are configured to transmit and obtain—or "stream"—"media" ("***configurable to receive and transmit data via the wireless modem and the wireless network***"). SAMSUNG-1041, ¶¶[0018], [0025], [0060], [0066], [0075]-[0076], FIGS. 3-4, 8-12[4]; SAMSUNG-1003, ¶51. As described above, communication over wireless networks on the Bennett mobile end-user device occurs via "***the wireless modem and the wireless network***." *See supra*, [1.1].

[4] Bennett's figures all denote "media client 200," thus indicating the same embodiment. SAMSUNG-1041, FIGS. 3-4, 8-12

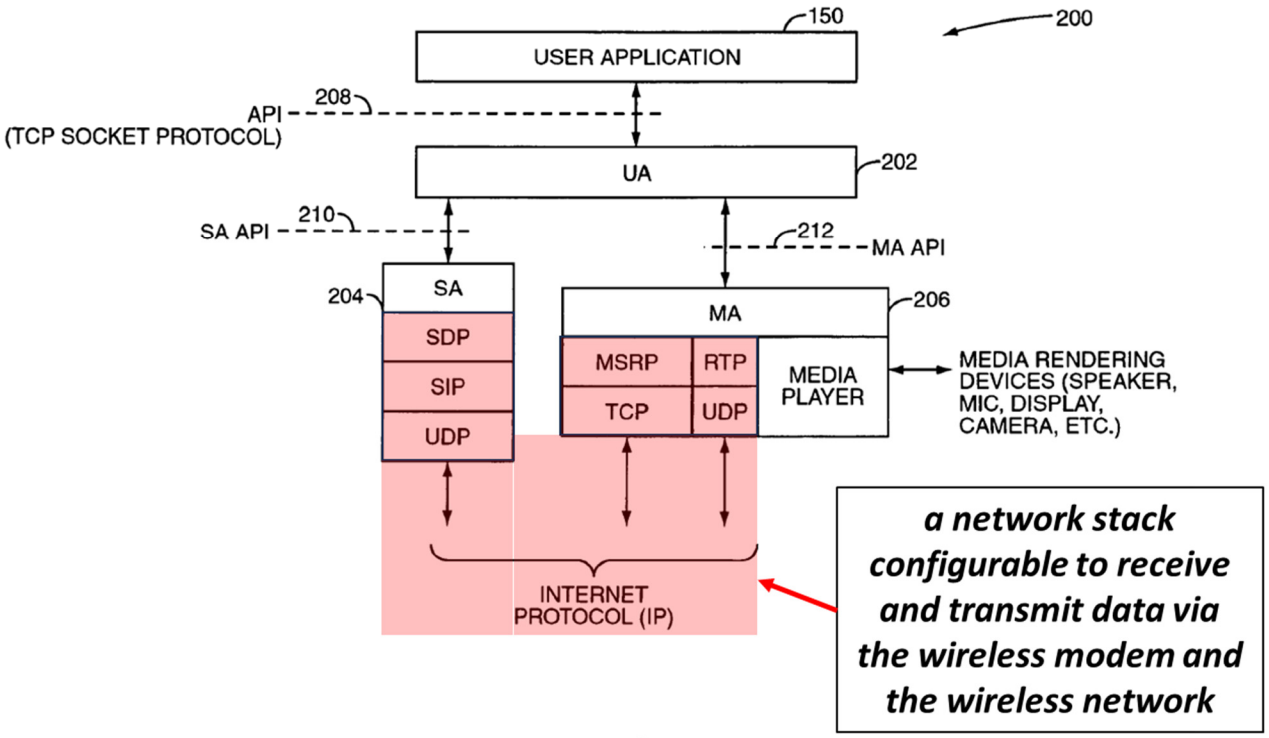

FIG. 3

SAMSUNG-1041, FIG. 3.

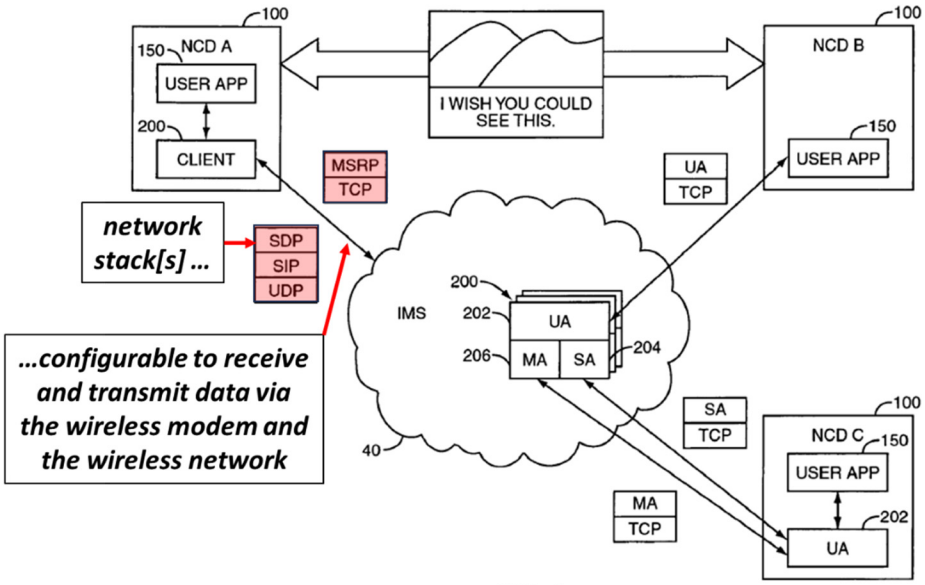

FIG. 4

SAMSUNG-1041, FIG. 4.

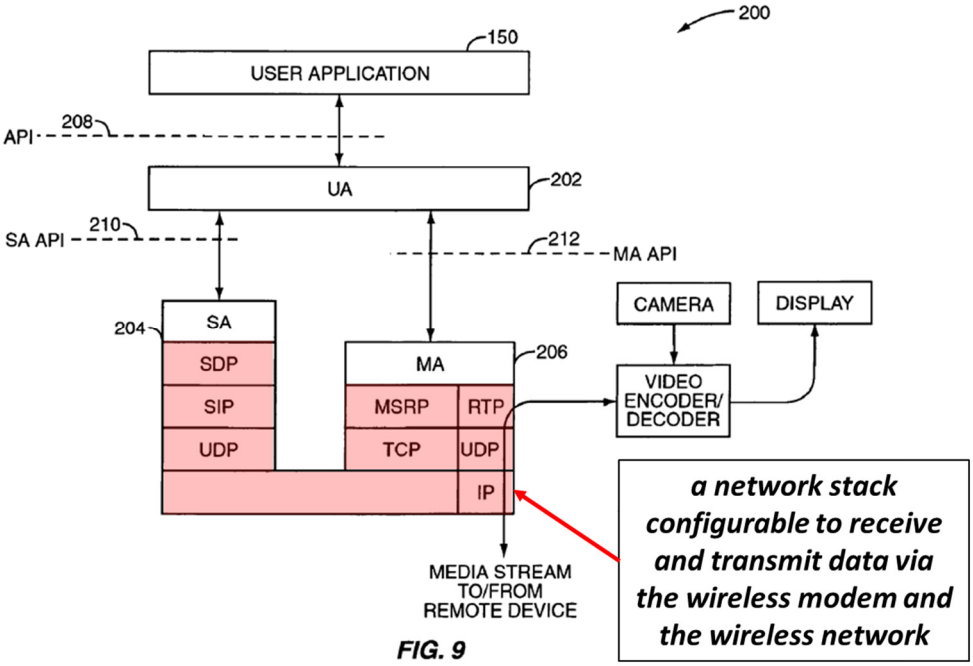

FIG. 9

SAMSUNG-1041, FIG. 9.

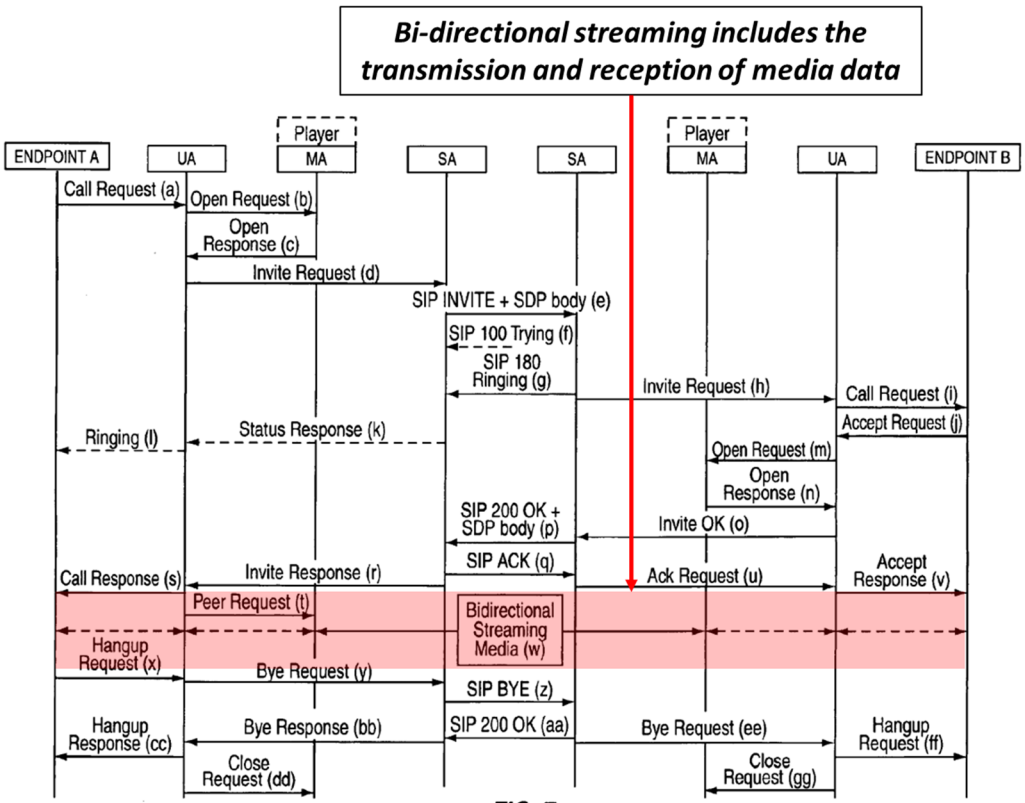

FIG. 7

SAMSUNG-1041, FIG. 7.

Similarly, the '918 Patent depicts Internet Protocol ("IP"), Transmission Control Protocol ("TCP"), and User Datagram Protocol ("UDP") as part of a "device stack" (which as Dr. Traynor explains, is a "network stack"). SAMSUNG-1001, 2:21-26, FIGS. 12-13; SAMSUNG-1003, ¶52. The '918 Patent also frequently refers to "IP" techniques with respect to the "network stack." SAMSUNG-1001, 61:51-62, 109:22-26, 112:62-113:9.

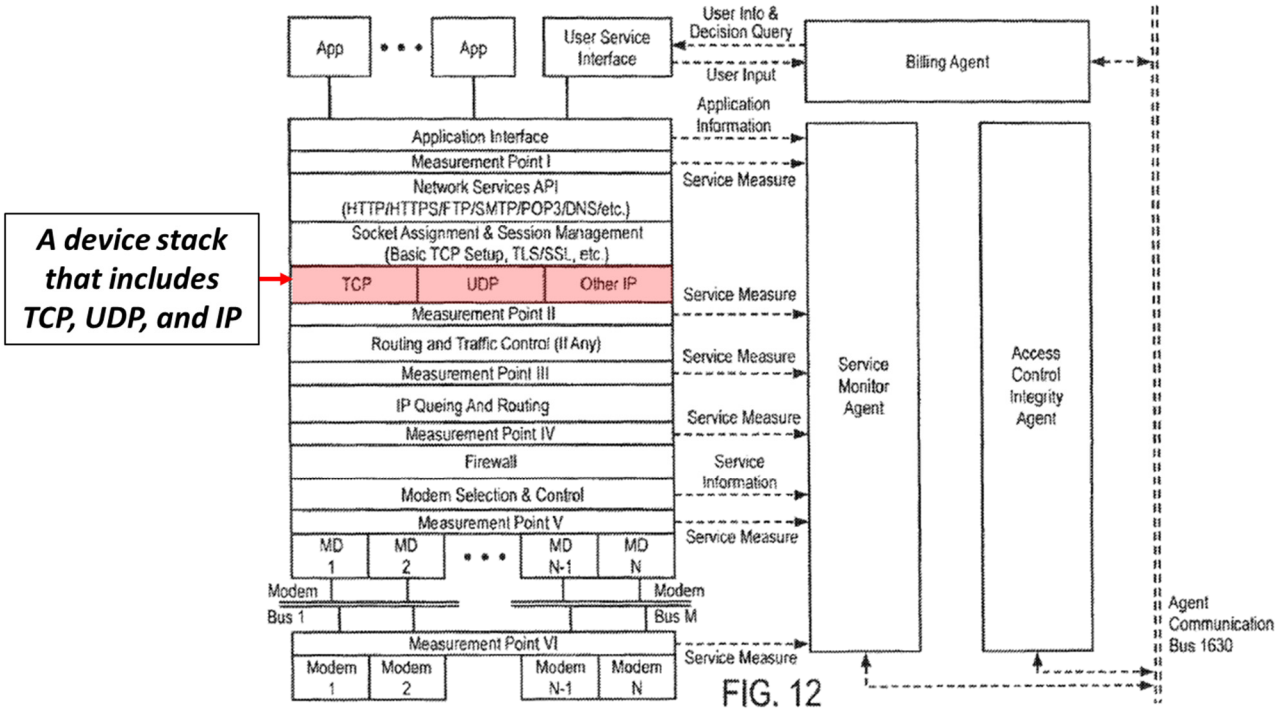

FIG. 12

SAMSUNG-1001, FIG. 12.

[1.3]

<u>open and use data packet flows via the network stack, the wireless modem, and the at least one wireless network</u>

Bennett discloses the use of "Session Initiation Protocol (SIP)" for "establishing, modifying and terminating communication sessions between one or

more participants" ("***open and use data packet flows via the network stack, the wireless modem, and the at least one wireless network***")[5]. SAMSUNG-1041, ¶¶[0018]-[0022]. Bennett discloses that SIP enables applications residing on the mobile terminal to "establish a communications session." SAMSUNG-1041, ¶[0022]; SAMSUNG-1003, ¶53. SIP sessions include "Internet multimedia conferences, Internet telephony calls, and multimedia distributions" that are performed using protocols such as "Real-time Transfer Protocol (RTP)" and "Message Session Relay Protocol (MSRP)." *Id*.

As Dr. Traynor explains, a POSITA would have recognized and found obvious that the protocols disclosed in Bennett would have included "***data packet flows***" as these protocols are examples of "packet switched services" that communicate data in a series of data packets. SAMSUNG-1003, ¶54; SAMSUNG-1041, ¶[0017]. Additionally, a POSITA would have recognized and found obvious that the communication of these "***data packet flows***" would have been "***via the network stack, the wireless modem, and the at least one wireless network***" as Bennett's media, included in the data packet flow, is retrieved over various wireless networks, described above, that use protocol

[5] Bennett discloses that other protocols may be used, for example, "H.323." SAMSUNG-1041, ¶[0018].

stacks and wireless modems. SAMSUNG-1003, 54; *see supra* [1.1], [1.2]; SAMSUNG-1003, ¶54.

a first network stack Application Programming Interface (API), containing at least one first call accessible to each of a plurality of device applications, the first network stack API callable by each of the plurality of device applications

Bennett also discloses a "signaling agent (SA) 204" within its "media client 200" that "implements SIP and SDP protocols to handle signaling tasks" which include "setting up, modifying, and tearing down communication sessions, [and] negotiating session parameters" ("***open and use data packet flows via the network stack, the wireless modem, and the at least one wireless network***"). SAMSUNG-1041, ¶¶[0025], [0031], [0033], [0040], [0043]-[0049], Table-2, FIGS. 3-10; SAMSUNG-1003, ¶55. The SA 204 is called by the "user agent (UA) 202" of the media client 200 using a "SA API 210" ("***a first network stack Application Programming Interface (API)***") in response to a request from a "user application 150" ("***the first network stack API callable by each of the plurality of device applications***"). *Id*.

The SA API 210 includes various "requests" ("***at least one first call accessible to each of a plurality of device applications***") to perform actions in SIP sessions, including "INVITE" requests ("***open and use data packet flows via the network stack, the wireless modem, and the at least one wireless network***") which identify a source of data or a recipient. SAMSUNG-1041,

¶¶[0031], [0033], [0040], [0045]-[0046], FIGS. 6-7, Table-2; SAMSUNG-1003, ¶56. Bennett frequently refers to "applications" operating on its devices and says that "any" application 150 can use its techniques ("***a plurality of device applications***"). SAMSUNG-1041, ¶¶[0018], [0022], [0029], [0075]. Vadde also explicitly describes performing its techniques for "a plurality of applications executing on a computing device" ("***a plurality of device applications***"). SAMSUNG-1042, Abstract, ¶¶[0002], [0043].

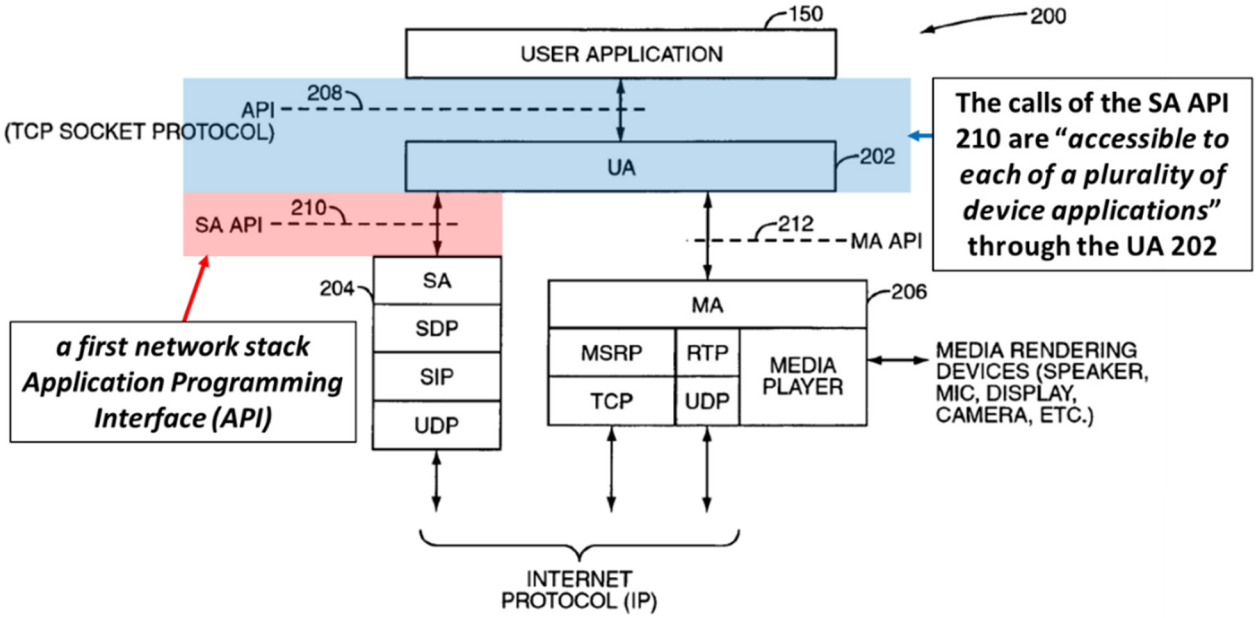

FIG. 3

SAMSUNG-1041, FIG. 3.

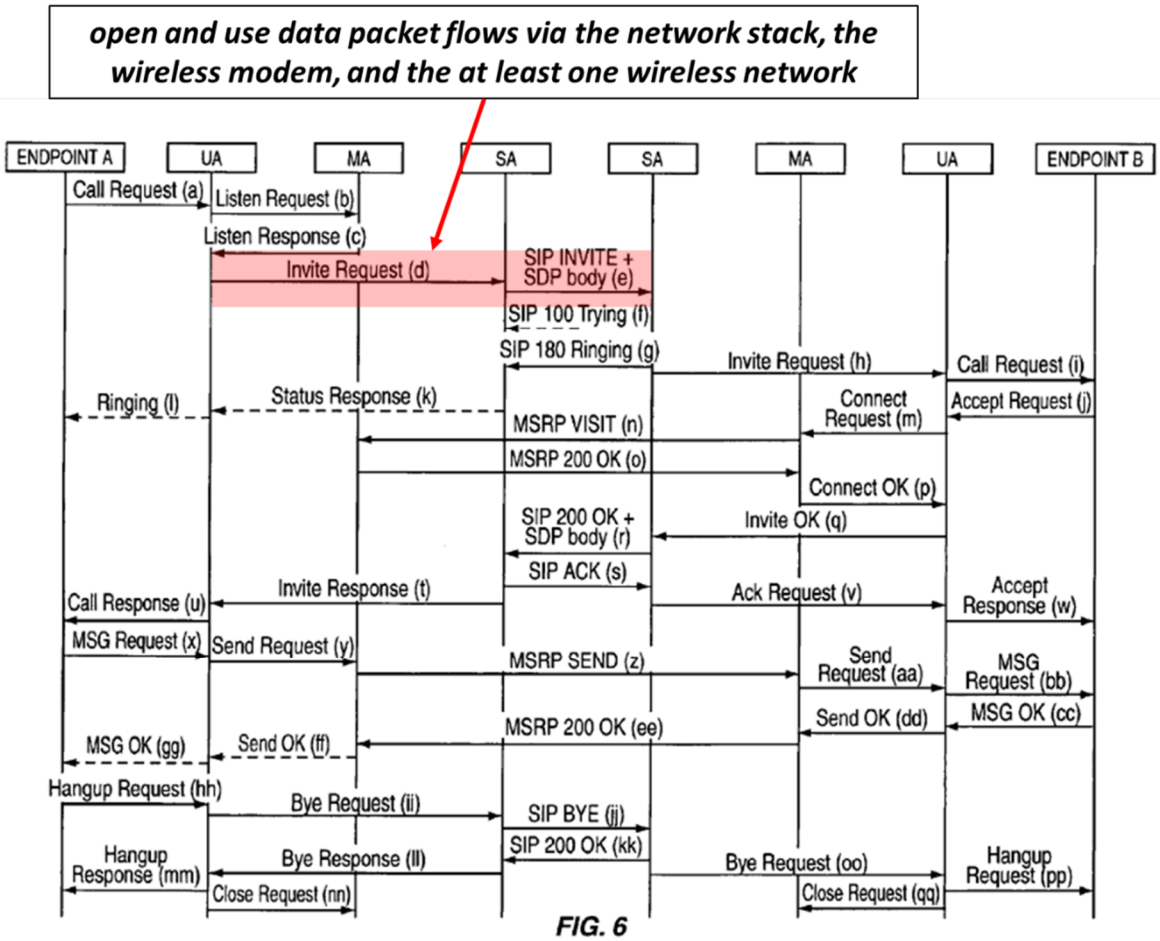

FIG. 6

SAMSUNG-1041, FIG. 6.

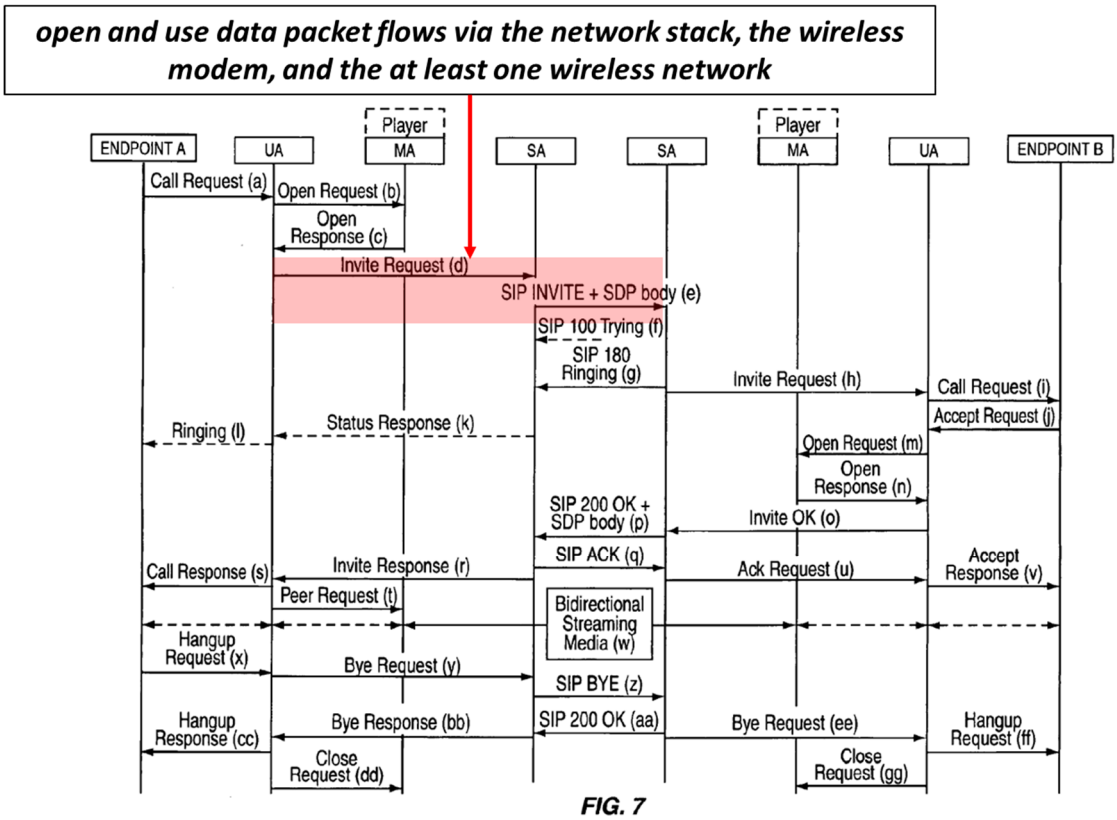

FIG. 7

SAMSUNG-1041, FIG. 7.

To the extent Patent Owner argues that the calls of the "***first network stack Application Programming Interface (API)***" must be directly "***accessible to each of a plurality of device applications***," or that the application must directly call the "***first***" API, the '918 Patent does not support such a narrow interpretation. SAMSUNG-1003, ¶57. On the contrary, the process of applications indirectly calling APIs is depicted in the '918 Patent in multiple embodiments. SAMSUNG-1001, 110:12-111:17, 116:39-58; 119:49-60, FIGS. 30, 32, 35. Indeed, the '918 Patent depicts multiple embodiments where an API (e.g., a

"socket") is called by a program module other than the requesting "application," indicating that such an interpretation is within the scope of the claims. *Id*.

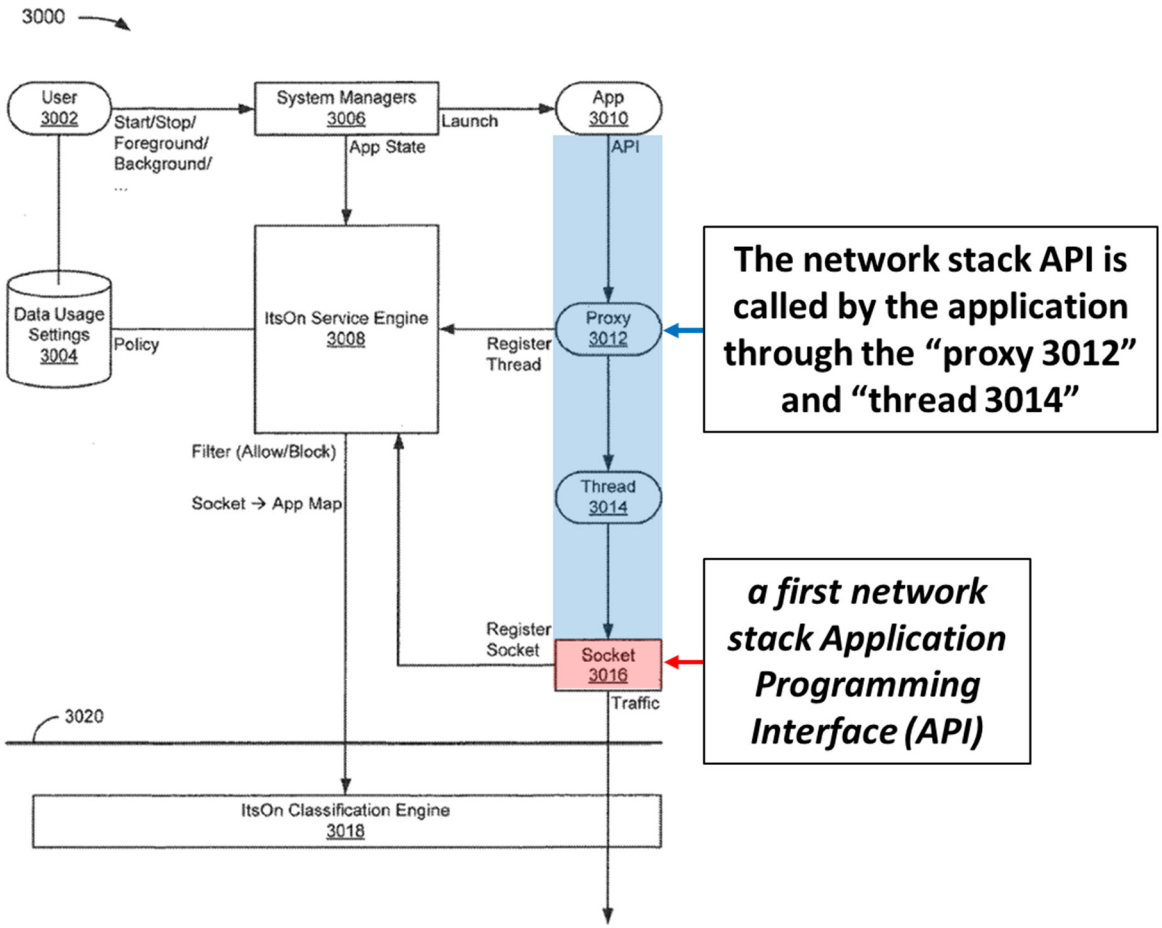

FIG. 30

SAMSUNG-1001, FIG. 30.

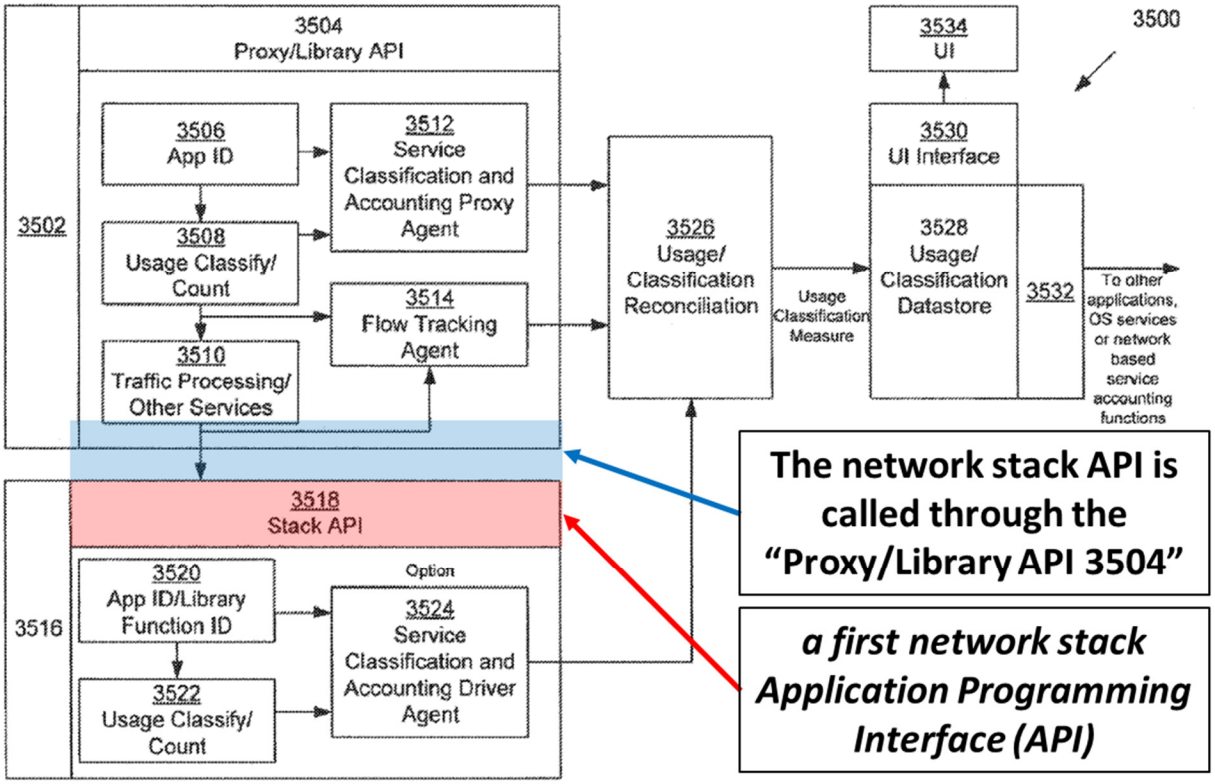

FIG. 35

SAMSUNG-1001, FIG. 35.

Moreover, the '918 Patent describes an "application service interface layer" that is "above the standard networking stack API"—positioned between the API and the requesting applications (much like Bennett's UA 202)—further confirming that the APIs need only be "***accessible***" to the applications when called (e.g., capable of being used). SAMSUNG-1001, 62:10-51, FIG. 12-13; SAMSUNG-1041, ¶[0025], FIG. 3; SAMSUNG-1003, ¶58. Even further, the '918 Patent describes "network based APIs" that are located "on a network element"—completely separate from the device itself. SAMSUNG-1001, 75:26-37.

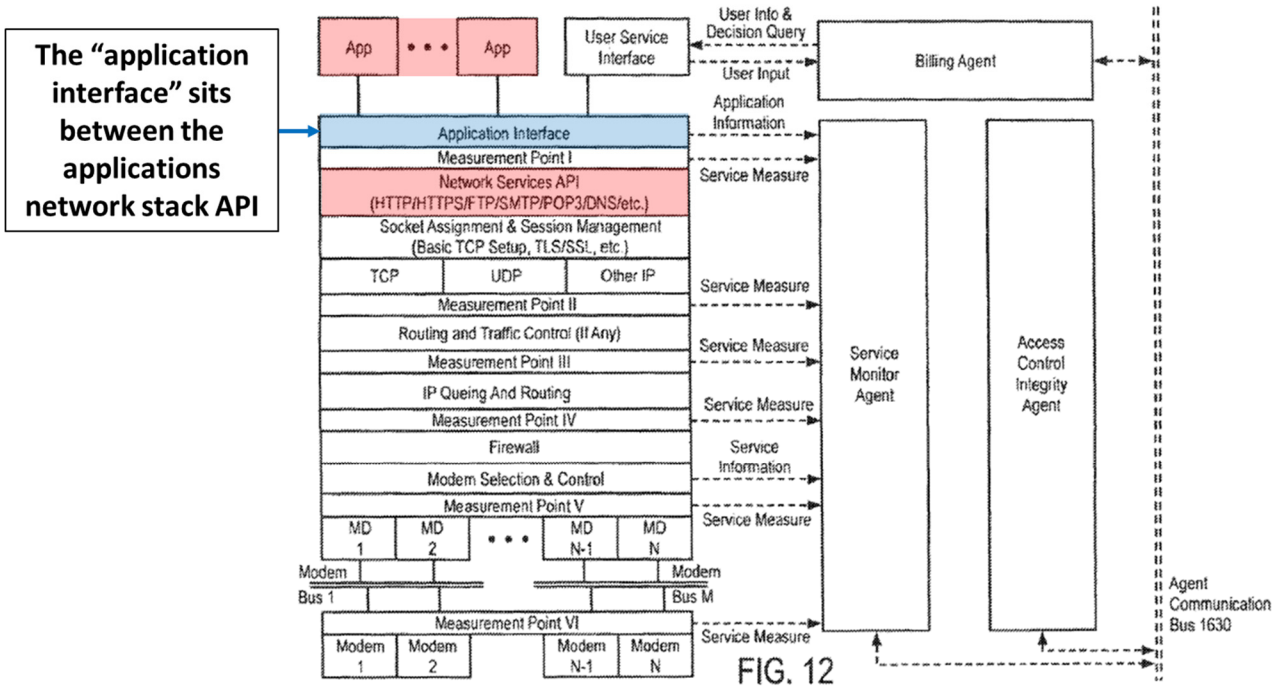

FIG. 12

SAMSUNG-1001, FIG. 12.

[1.4]

a data transfer request for a media object

The '918 Patent describes "media download[s]," "media streaming," "audio files" played by a "media player," "streaming audio," "video conference[s]," Voice over Internet Protocol ("VoIP"), "multimedia data," and "instant messaging" as example application activities that involve the transfer of media ("***a data transfer request for a media object***"). SAMSUNG-1001, 72:37-50, 107:34-46, 111:44-112:17. Bennett discloses similar "***media objects***" retrieved after a "***data transfer request***," for example, "voice over IP

(VoIP), video and audio streaming, … videoconferencing, [and] instant messaging." SAMSUNG-1041, ¶¶[0017]-[0018], [0024], [0070], [0076]; SAMSUNG-1003, ¶59.

a second API containing at least one second call accessible to each of the plurality of device applications, the second API callable by each of the plurality of device applications

Bennett discloses that its media client 200 includes a "media agent (MA …) 206" that "manages media connections, routes media according to media type and user settings, and invokes media players to process media as required" ("***make a data transfer request for a media object***"). SAMSUNG-1041, ¶¶[0025], [0050]-[0056], Table-3, FIGS. 3-10. The MA 206 is called by the UA 202 of the media client 200 using a "MA API 212" ("***a second API***") in response to a request from a "user application 150" ("***the second API callable by each of the plurality of device applications***"). SAMSUNG-1041, ¶¶[0031], [0050]-[0056], Table-3, FIGS. 3-10; SAMSUNG-1003, ¶60.

The MA API 212 includes various "requests" ("***at least one second call accessible to each of the plurality of device applications***") to send and receive media, including "LISTEN," "SEND," and "OPEN" requests ("***make a data transfer request for a media object***"). SAMSUNG-1041, ¶¶[0031], [0033], [0040], [0045]-[0046], FIGS. 6-7, Table-2; *see supra* [1.3] (describing a "***plurality of device applications***"); SAMSUNG-1003, ¶61.

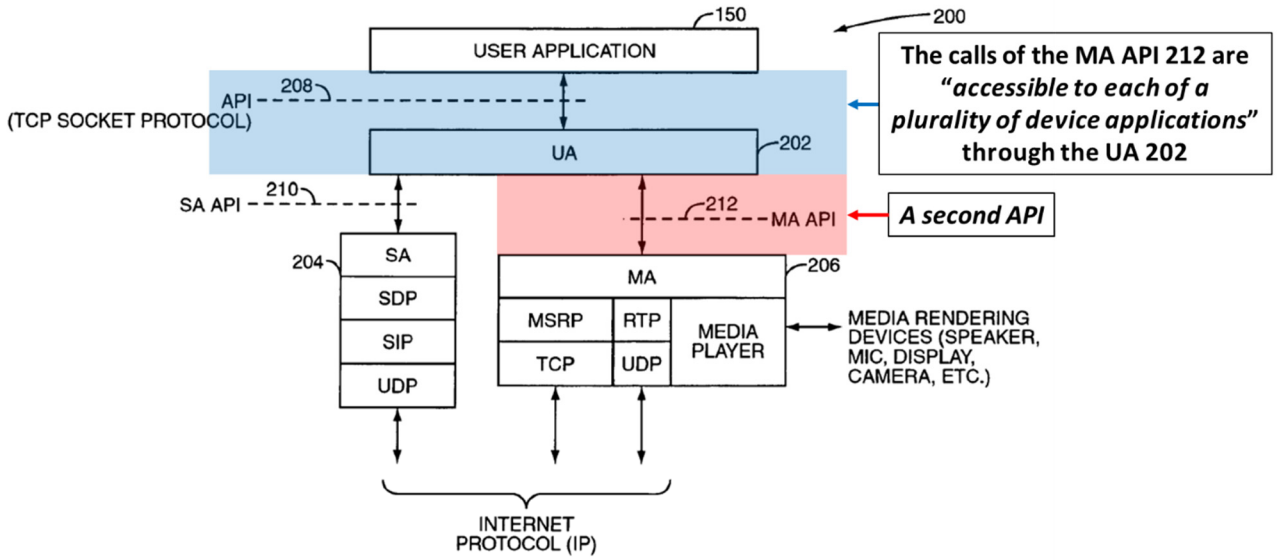

FIG. 3

SAMSUNG-1041, FIG. 3.

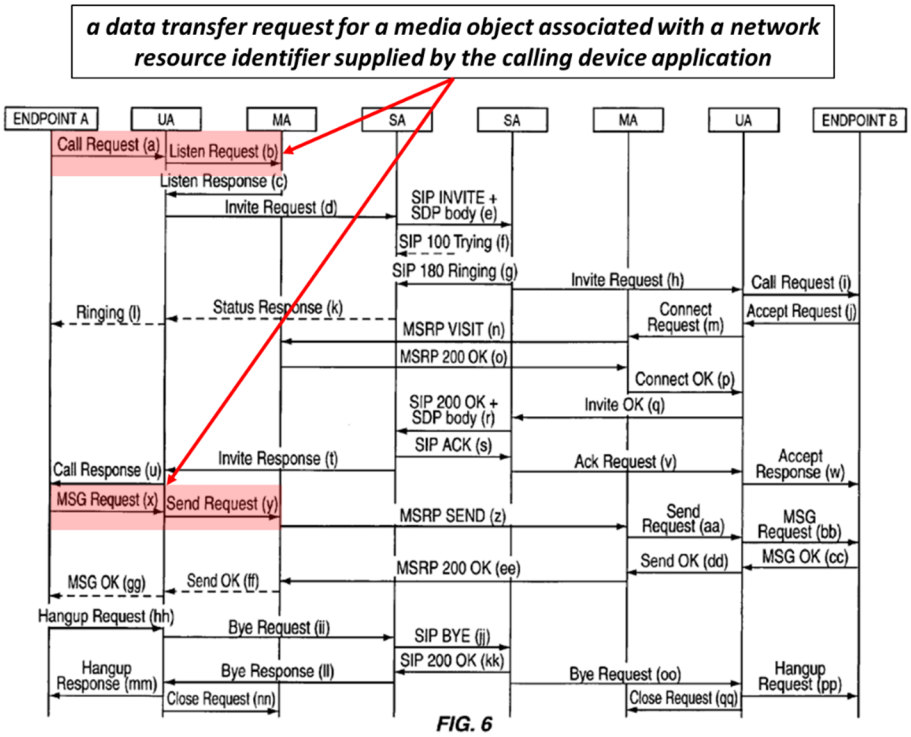

FIG. 6

SAMSUNG-1041, FIG. 6.

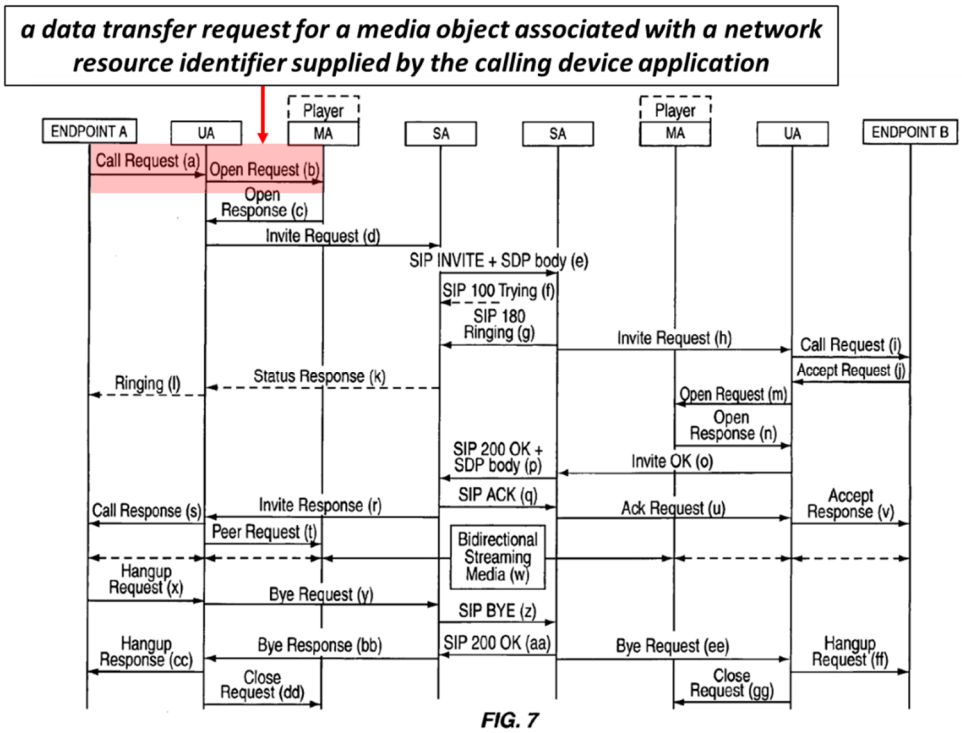

FIG. 7

SAMSUNG-1041, FIG. 7.

To the extent Patent Owner argues that the calls of the "***second API***" must be directly "***accessible to each of a plurality of device applications***," or that the application must directly call the "***second***" API, the '918 Patent does not support such a narrow interpretation. SAMSUNG-1003, ¶62. On the contrary, the process of applications indirectly calling APIs is depicted in the '918 Patent in multiple embodiments. SAMSUNG-1001, 110:12-111:17, 116:39-58; 119:49-60, FIGS. 30, 32, 35; *see supra* [1.4].

a network resource identifier supplied by the calling device application

The '918 Patent gives examples of "***network resource identifier[s]***" that include: "(e.g., an IP address, a URL, a remote file name or address, a stream name,

an object name, or any combination of these identifiers) that identifies a source (or a proxy to the source) of the data to be transferred or a data object to be transferred." SAMSUNG-1001, 112:43-47; SAMSUNG-1003, ¶63.

Bennett discloses that its MA API 212 calls, for example the OPEN request, includes "a network address of a remote host from which media connections will be accepted" ("***a network resource identifier***") that is provided by the application when it calls the UA 202 (e.g., via a "CALL" request) ("***supplied by the calling device application***"). SAMSUNG-1041, ¶¶[0034], [0050]-[0056], [0086], Table-3; SAMSUNG-1003, ¶64. Applications also provide a "userid" and a "port" to call via the CALL request ("***a network resource identifier***"). SAMSUNG-1041, ¶[0084], Table-1.

Bennett's examples of "***network resource identifier[s]***" are consistent with the '918 Patent, and include: "a userID, alias, or fully qualified network address" ("an IP address" and "remote file … address"). SAMSUNG-1041, ¶[0034]. Bennett also provides example addresses of "call alice@ims.net: 5060 video/h263" and "call 10.0.0.1:5060 video/h263" (a "remote file … address"). *Id*. Additionally, all the aforementioned examples "identif[y] a source (or a proxy to the source) of the data to be transferred or a data object to be transferred." SAMSUNG-1041, ¶[0034]; SAMSUNG-1001, 112:43-47. Bennett also describes content located at Uniform Resource Identifiers ("URIs"), which a POSITA would have recognized

include Uniform Resource Locators (URLs). SAMSUNG-1041, Table-1; SAMSUNG-1003, ¶65.

"*network resource identifiers*" supplied by the calling application via the CALL request

TABLE 1-continued

UA API

MESSAGE	USE	SYNTAX	PARAMETERS	PARAMETER DESCRIPTION
Notify Response	Sent by IMS application to UA to acknowledge notify request	notify status_message	status_message	Indicates receipt of notify request, e.g. "OK"
Publish Request	Sent by IMS application to IMS UA to publish change in the user's presence status	publish uri expire_time [autorefresh]	uri expiretime autorefresh	Address. Time before the publish expires in seconds. Optional flag instructing the UA to refresh the publish automatically when it expires. If the application does not want the UA to automatically refresh the publish, the flag is omitted.
Publish Response	Sent by IMS UA to IMS application responsive to Publish request	publish uri expiretime status_message[:status_code]	uri expiretime status_message status_code	Address. Sometimes the server ignores the requested expire time and sets it to another value. This parameter returns the expiretime selected by the server. Status of request indicating success (e.g. "OK") or failure (e.g., "Failed") Optional code indicating status of publish request, 200 if the request was successful or a failure code on failure.
Call Request	Sent between IMS application and IMS UA to initiate MSRP and RTP sessions	call userid [userid@remotehost[:port]] call_type1...call_typeN	userid host:port call_type	At the originating endpoint, the IMS application specifies a userid to call when sending Call request if registered with a proxy. At the terminating endpoint the UA specifies the userid of the calling party. At the originating endpoint, the UA specifies the host address and port to call, if not registered with a proxy. At the terminating endpoint the UA specifies the userid of the network address and port designated by the calling party for the call. Type of call to be established, for example audio/amr or video/h263. Multiple call_types may be listed, e.g., audio/amr and video/h263 for video telephony

SAMSUNG-1041, Table-1.

The OPEN request of the MA API includes the "*network resource identifier*" supplied by the calling application

TABLE 3

MA API

MESSAGE	USE	SYNTAX	PARAMETERS	PARAMETER DESCRIPTION
Listen Request	Sent by UA to MA to initiate a MSRP session. The MA opens a TCP listener in response to the Listen request.	listen [remotehost]	remotehost	Optional parameter specifies address from which connections can be made.
Listen Response	Sent by MA to UA as final response to Listen request. The Listen response includes the address and port of the TCP connection opened for the MSRP session.	listen status_message[:status_code] host:port	status_message	Status of listen request indicating success (e.g. "OK") or failure (e.g., "Failed")
			status_code	Optional code indicating status of Listen request, 200 if the request was successful or an error code on failure.
			host:port	Network address of host and port number for port opened in response to Listen Request. Returned when Listen request is successful. Omitted when Listen request fails.
Open Request	Sent by UA to MA to initiate RTP session. The MA opens a TCP connection in response to the Open request.	open [remotehost]	remotehost	Optional address specifies address from which connections can be made.

SAMSUNG-1041, Table-3.

[1.5]

Bennett discloses that its media client 200 includes a "media agent (MA …) 206" ("***a media service manager***") that "implements the message session relay protocol (MSRP) and the Real-Time Transport Protocol (RTP)" and "manages media connections, routes media according to media type and user settings, and invokes media players to process media as required" ("***manage network data transfers for the media object by interfacing with the network stack to retrieve the media object***"). SAMSUNG-1041, ¶¶[0025], [0050]-[0056], Table-3, FIGS. 3-10; SAMSUNG-1003, ¶66.

The MA 206 is called by the UA 202 of the media client 200 using a "MA API 212" ("***prompted by the second call***") in response to a request from a

"user application 150." SAMSUNG-1041, ¶¶[0031], [0050]-[0056], Table-3, FIGS. 3-10. Additionally, the MA 206 uses "TCP and/or UDP over IP for transport of RTP and MSRP messages" and retrieves media that "passes up through the IP, UDP and RTP stacks" prior to being played at a media player or decoder ("***interfacing with the network stack to retrieve the media object***"). SAMSUNG-1041, ¶¶[0025], [0076]-[0079]. Additionally, as described above, Bennett's media is retrieved from "remote host[s]" over wireless networks (e.g., "GPRS") through the use of a corresponding wireless modem (such that Bennett's media is retrieved "***via the wireless modem and the wireless network***"). SAMSUNG-1041, ¶[0017], [0054], FIG. 1; *see supra*, [1.1]; SAMSUNG-1003, ¶67.

As described above, requests from applications include a "***network resource identifier***" that is "***associated***" with the "***media object***." *See supra*, [1.4]; SAMSUNG-1003, ¶68.

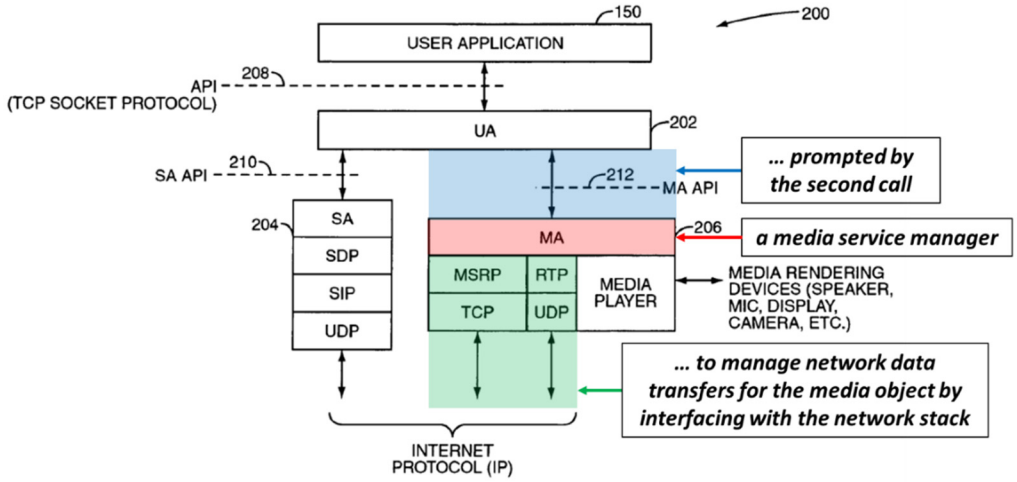

FIG. 3

SAMSUNG-1041, FIG. 3.

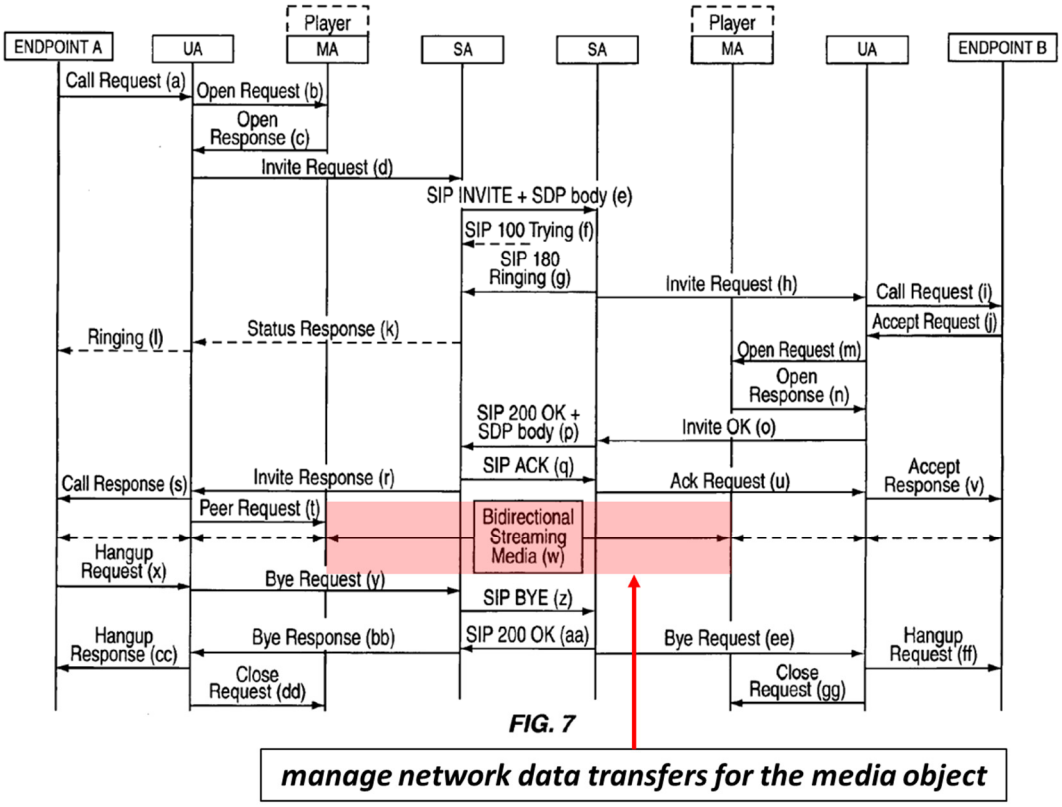

FIG. 7

SAMSUNG-1041, FIG. 7.

[1.6]

Vadde discloses techniques for "managing data traffic" for each of a plurality of applications using a "policy" based system that enforces restrictions based on "attributes" in the transmitted data and corresponding data "usage limits." SAMSUNG-1042, ¶¶[0010], [0015]-[0016], [0025]-[0026]; SAMSUNG-1003, ¶69.

one or more service classification and measurement agents to associate wireless network data usage for the media object network data transfers with the device application that requests the data transfer for the media object

Vadde enforces its policies with a "restrictor component 122" ("***one or more service classification and measurement agents***") which "appl[ies] the data usage policy" and "monitors the data transmitted and/or received by the applications 110 and determines whether the data usage limits 116 corresponding to each of the applications 110 have been exceeded or are about to be exceeded." SAMSUNG-1042, ¶¶[0022], [0024]-[0026], [0029]-[0032]; SAMSUNG-1003, ¶70. In particular, Vadde's restrictor component 122 monitors transmitted data to determine "attributes 112," which include an "application name" which is given a "Program ID" ("***associate wireless network data usage for … the device application***"). SAMSUNG-1042, ¶¶[0024], [0032]. Applications also have "a corresponding set of attribute values" that are monitored to produce "usage patterns" ("***associate wireless network data usage for … the device application***"). SAMSUNG-1042, ¶[0024]. In combining Vadde's techniques into Bennett's device, as explained above, a

POSITA would have found it obvious to leverage Vadde's monitoring of application data usage to monitor and associate "***media object network data transfers***" performed via the MA API 212 with "***the device application that requests the data transfer for the media object***" as these transfers would have resulted in data usage that would potentially be chargeable to the user of the Bennett-Vadde device. *See supra*, §III.A.3; SAMSUNG-1003, ¶70.

Vadde's policies denote specific applications with a "Program ID"

```
<budget>
    <policy Cellular
        <Program ID=EMAIL, Limit=500MB, Send=100MB,
Roaming=YES>
        <Program ID=SocialNetworkingSiteA, Limit=10MB>
        <Program ID=DEF, Limit=10MB, Roaming=NO>
        <PromptReminder Criteria=Bytes, PercentofBudget=50%>
        <PromptData Criteria=Bytes, PercentofBudget=90%>
        <PromptData Criteria=Roaming, Limit=20MB>
    </policy>
    <policy WiFi>
        <Program ID=XYZ, Limit=5000MB>
        <Program ID=ABC, Limit=5000MB>
    </policy>
</budget>
```

SAMSUNG-1042, ¶[0032].

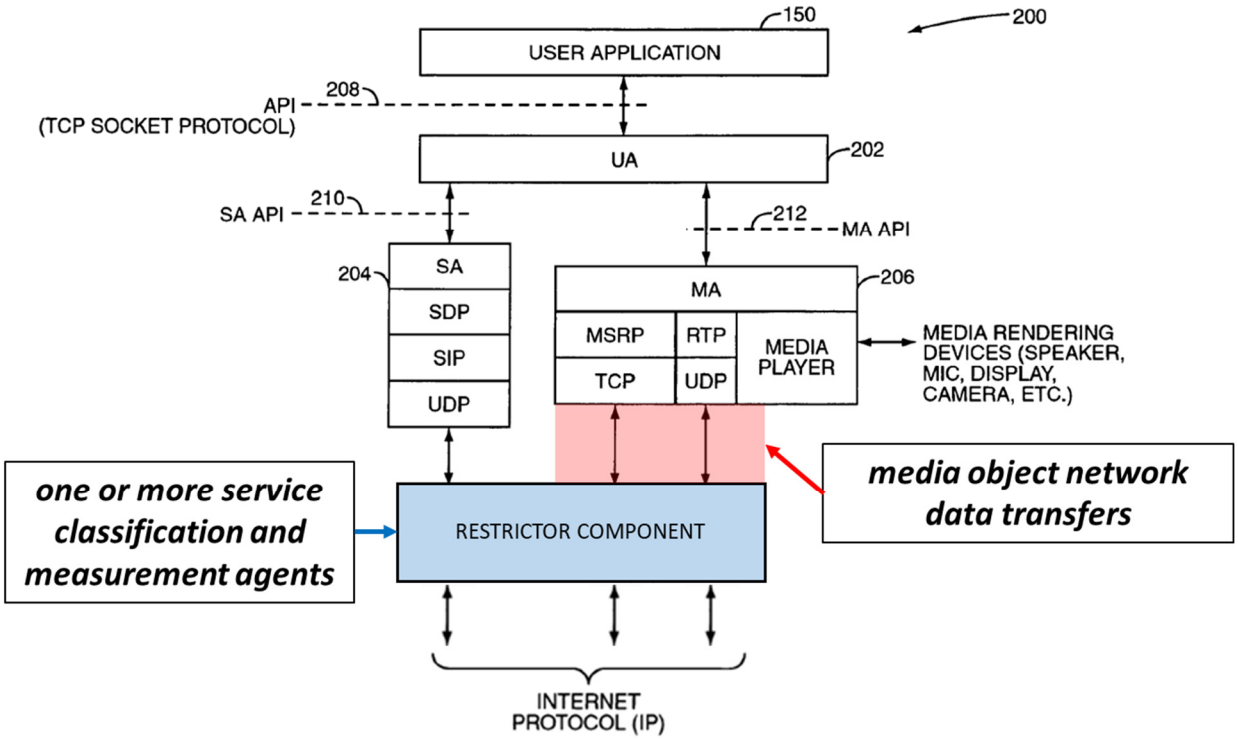

SAMSUNG-1041, FIG. 3 (as modified by Vadde).

to associate wireless network data usage for respective data packet flows opened and used via the first network stack API with the device application opening such respective data packet flow,

Additionally, as explained above, a POSITA would have found it obvious to leverage Vadde's monitoring of application data usage to monitor and associate "***respective data packet flows opened and used***" via the SA API 210 with "***the device application opening such respective data packet flow***" as these packet flows would have resulted in data usage that would potentially be chargeable to the user of the Bennett-Vadde device. SAMSUNG-1042, ¶¶[0010], [0015]-[0016], [0025]-[0026]; *see supra*, §III.A.3; SAMSUNG-1003, ¶71.

As Dr. Traynor explains, a POSITA would have recognized and found

obvious that the protocols disclosed in Bennett would have included "***data packet flows***" as these protocols are examples of "packet switched services" that communicate data in a series of data packets. SAMSUNG-1003, ¶72; SAMSUNG-1041, ¶[0017]; *see supra* [1.3]. Rakoshitz corroborates Dr. Traynor's testimony and describes that network traffic is "a flow of information or data or packets of information." SAMSUNG-1046, 12:12-58, 15:57-67.

In the combination, the restrictor component of the Bennett-Vadde device would have measured data usage associated with the "flow" of information (communication sessions established via the SA 204 and SA API 210—"***respective data packet flows opened and used via the first network stack API***") classified to each application ("***with the device application opening such respective data packet flow***"). SAMSUNG-1042, ¶¶[0010], [0015]-[0016], [0025]-[0026]; SAMSUNG-1003, ¶73.

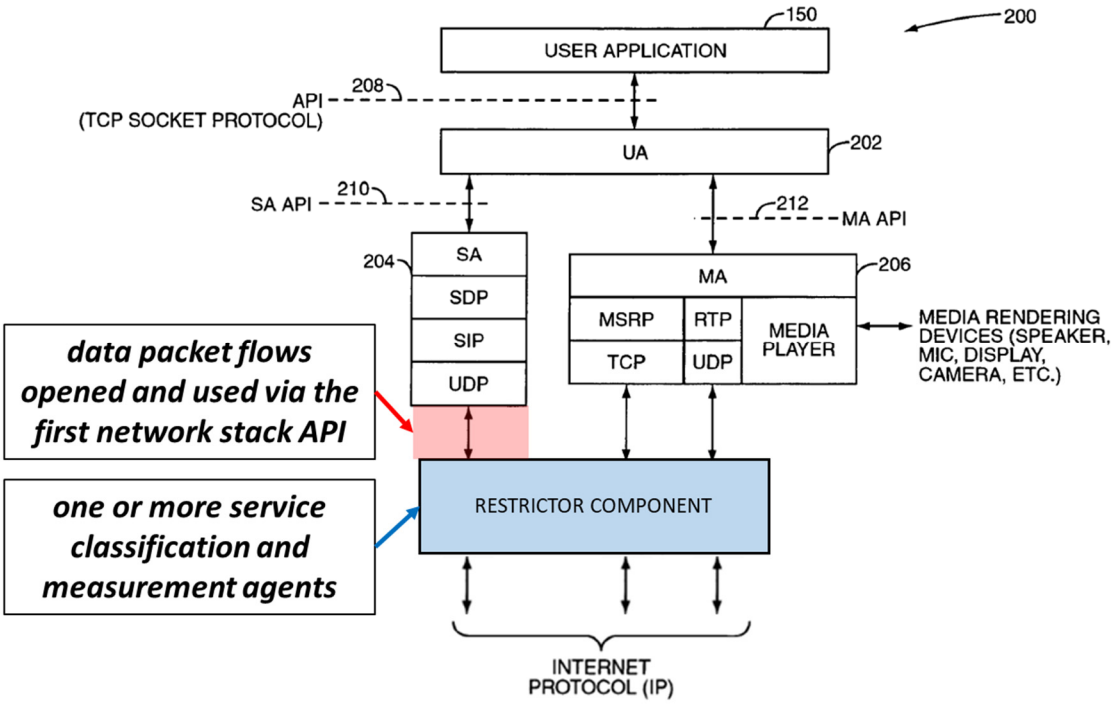

SAMSUNG-1041, FIG. 3 (as modified by Vadde).

and to reconcile wireless network data usage for each of the plurality of device applications to track an aggregate wireless network data usage attributable to each of the plurality of device applications via both the first network stack API and the second API.

Vadde's restrictor component 122 "monitors the data transmitted and/or received by the applications 110 and determines whether the data usage limits 116 corresponding to each of the applications 110 have been exceeded or are about to be exceeded" ("***reconcile wireless network data usage for each of the plurality of device applications***"). SAMSUNG-1042, ¶¶[0022], [0024]-[0026], [0029]-[0032]; SAMSUNG-1003, ¶74. When a data usage limit is exceeded, the application's data usage is "restricted." *Id*.

Vadde's "data usage limits 116" are set for "each" application and include

"a maximum quantity of data to be transmitted and/or received by a particular application 110" ("***an aggregate wireless network data usage attributable to each of the plurality of device applications***"). SAMSUNG-1042, ¶¶[0010], [0016], [0018], [0022], [0025], [0029]-[0030], [0032]. As described above, this data usage would have been monitored for both the SA API 210 ("***the first network stack API***") and MA API 212 ("***the second API***") in the Bennett-Vadde combination. *See supra*, §III.A.3; SAMSUNG-1003, ¶75.

A limit placed on the *"aggregate wireless network data usage"*

```
<budget>
    <policy Cellular>
        <Program ID=EMAIL, Limit=500MB, Send=100MB,
Roaming=YES>
        <Program ID=SocialNetworkingSiteA, Limit=10MB>
        <Program ID=DEF, Limit=10MB, Roaming=NO>
        <PromptReminder Criteria=Bytes, PercentofBudget=50%>
        <PromptData Criteria=Bytes, PercentofBudget=90%>
        <PromptData Criteria=Roaming, Limit=20MB>
    </policy>
    <policy WiFi>
        <Program ID=XYZ, Limit=5000MB>
        <Program ID=ABC, Limit=5000MB>
    </policy>
</budget>
```

SAMSUNG-1042, ¶[0032].

[2]

As described above, Vadde discloses that each application's usage is tracked by an "application name" ("***an application name***") that is a "Program

ID" ("***an application identifier***"). SAMSUNG-1042, ¶¶[0024], [0032]; *see supra* [1.6]; SAMSUNG-1003, ¶76. Because Vadde monitors per application usage using these parameters, the Bennett-Vadde device "***associate[s] wireless network data usage for the media object network data transfers with the device application***" by "***identify[ing] … an application name, [and] an application identifier, … for the application that makes the data transfer request***." *Id*.

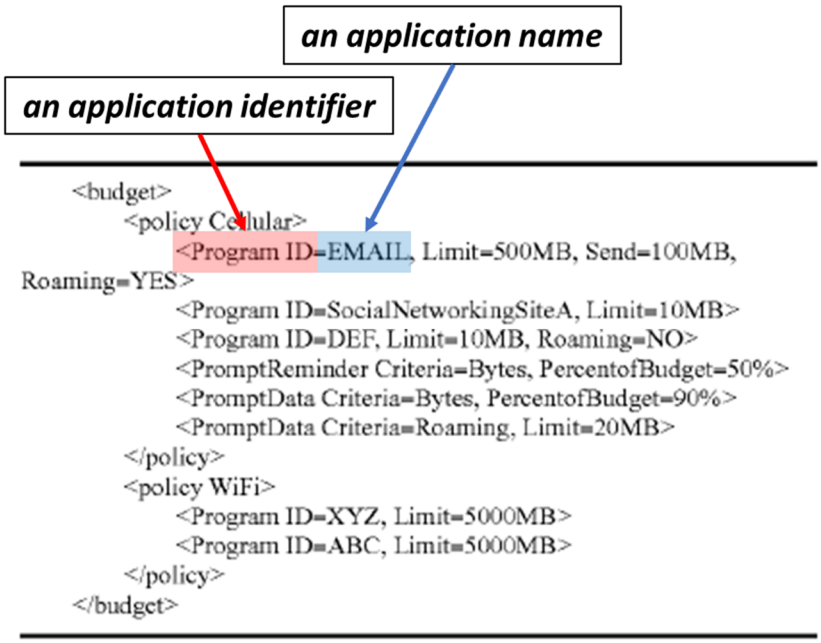

SAMSUNG-1042, ¶[0032].

[3]

As discussed above, Bennett's "requests" ("***the data transfer request***") include "a network address of a remote host from which media connections will be accepted" ("***a network resource identifier that identifies a source of the data to be transferred***") that is provided by the application when it calls the

UA 202 (e.g., via a "CALL" request). SAMSUNG-1041, ¶¶[0034], [0050]-[0056], Table-3; *see supra* [1.4]; SAMSUNG-1003, ¶77. Additionally, the CALL request includes a "host address and port to call" ("@remotehost"—"***a proxy to the source of the data to be transferred***") when the recipient has not previously registered with the proxy. SAMSUNG-1041, ¶¶[0034], [0084], Table-1.

"a proxy to the source of the data to be transferred"

Call Request	Sent between IMS application and IMS UA to initiate MSRP and RTP sessions	call userid [userid@remotehost[:port]] call_type1...call_typeN	userid	At the originating endpoint, the IMS application specifies a userid to call when sending Call request if registered with a proxy. At the terminating endpoint the UA specifies the userid of the calling party.
			host:port	At the originating endpoint, the UA specifies the host address and port to call, if not registered with a proxy. At the terminating endpoint the UA specifies the userid of the network address and port designated by the calling party for the call.
			call_type	Type of call to be established, for example audio/amr or video/h263. Multiple call_types may be listed, e.g., audio/amr and video/h263 for video telephony

SAMSUNG-1041, Table-1.

Bennett's examples of "***network resource identifier[s]***" include: "a userID, alias, or fully qualified network address" ("***a remote file name/address***"). SAMSUNG-1041, ¶[0034]. Bennett also provides example addresses of "call alice@ims.net: 5060 video/h263" and "call 10.0.0.1:5060 video/h263" ("***a remote file name/address***"). *Id*. Bennett further describes content located at Uniform Resource Identifiers ("URIs"), which a POSITA would have recognized include "***Uniform Resource Locator[s]***" ("URLs"). SAMSUNG-1041, Table-1; SAMSUNG-1003, ¶78; *see supra* [1.4]. Further, as Dr. Traynor explains, a POSITA also would have recognized and found obvious that URLs also indicated "***the***

media object to be transferred, in particular" as the file name of the media object would typically comprise part of the URL. SAMSUNG-1003, ¶78. For example, Riggs discloses that "the global address of content" ("***the media object to be transferred, in particular***") is "typically" provided "in the form of a Uniform Resource Locator (URL)" (e.g., a "feed URL"). SAMSUNG-1043, 1:25-35, 5:54-62, 6:38-43.

A POSITA would have understood and found obvious that URLs indicate "*media objects*"

One way to identify a publisher associated with content being played back is use of an "authority" section of a feed URL (e.g., a pointer received via media feed **159**) that references the media content. For example, if the user is playing back an episode from NBC's Heroes television show, then the feed URL for the Heroes feed may be something like "http://www.nbc.com/heroes/feed.xml". In this case, the authority (e.g., publisher id information) is "www.nbc.com", which is the publisher identifier.

SAMSUNG-1043, 5:54-62.

[8]

Bennett discloses that, once the SA 204 establishes a communication session (e.g., an "RTP session"—"***one or more data flow connections communicated through the device network stack***"), the UA 202 "sends a PEER request to the MA206 to provide the MA206 with the host address and port opened for the RTP session" ("***map the data transfer request and network resource identifier to one or more data flow connections communicated through the device***

network stack"). SAMSUNG-1041, ¶¶[0055], [0073], [0079], FIG. 7; SAMSUNG-1003, ¶79. The PEER request includes "the network address and port for the media connection" (the "***network resource identifier***" associated with the "***one or more data flow connections communicated through the device network stack***"). *Id*.

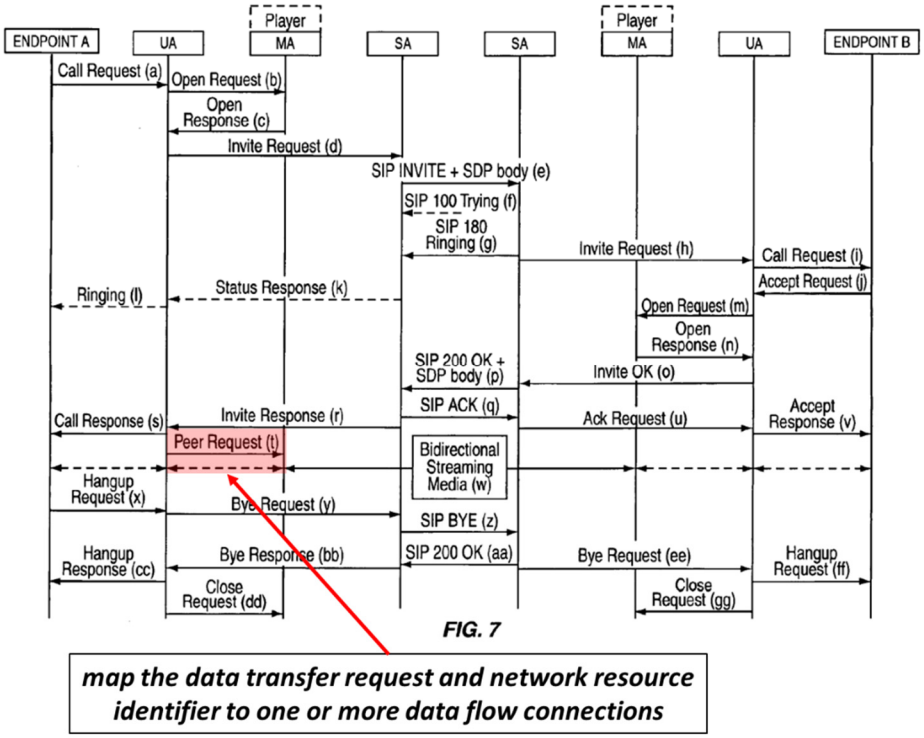

SAMSUNG-1041, FIG. 7.

[9]

Bennett discloses that its media client 200 includes "one or more media players" ("***a media player***") to "process and output media to media rendering devices" which include a "speaker and/or display of a mobile terminal 100." SAMSUNG-1041, ¶¶[0002], [0025], [0076], FIGS. 3, 9, 11. As an example, Bennett

discloses "media streaming" (a "***media object [that] comprises media data***") where "the user application 150 … receives the media stream and outputs the media stream to a media player" and, in this situation, the "MA 206 … directly route[s] the media stream to a media player" ("***that is, as a result of the media service manager management of network data transfers for the media object, received by the device and played by the media player through the user interface***"). SAMSUNG-1041, ¶[0076], FIG. 9; SAMSUNG-1003, ¶80. Bennett's FIGS. 3 and 9 depict examples of this process.

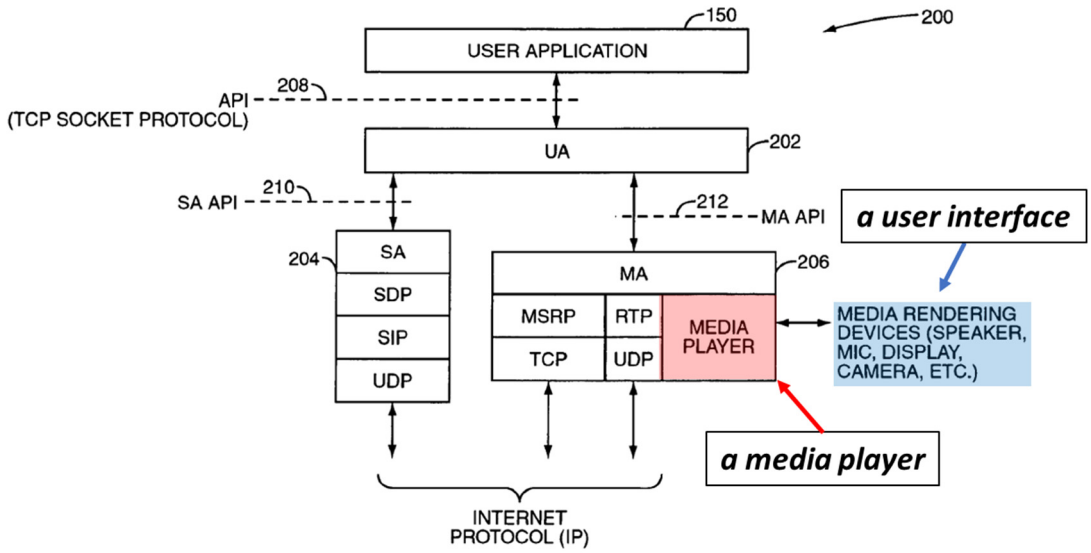

FIG. 3

SAMSUNG-1041, FIG. 3.

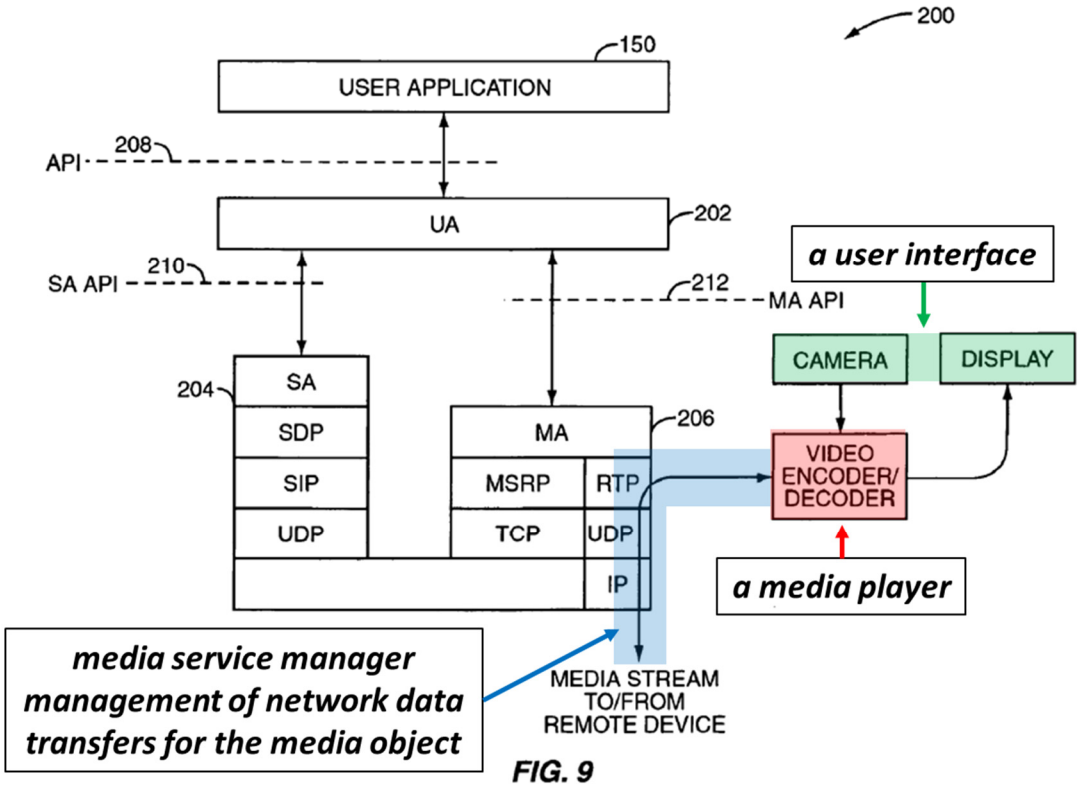

FIG. 9

SAMSUNG-1041, FIG. 9.

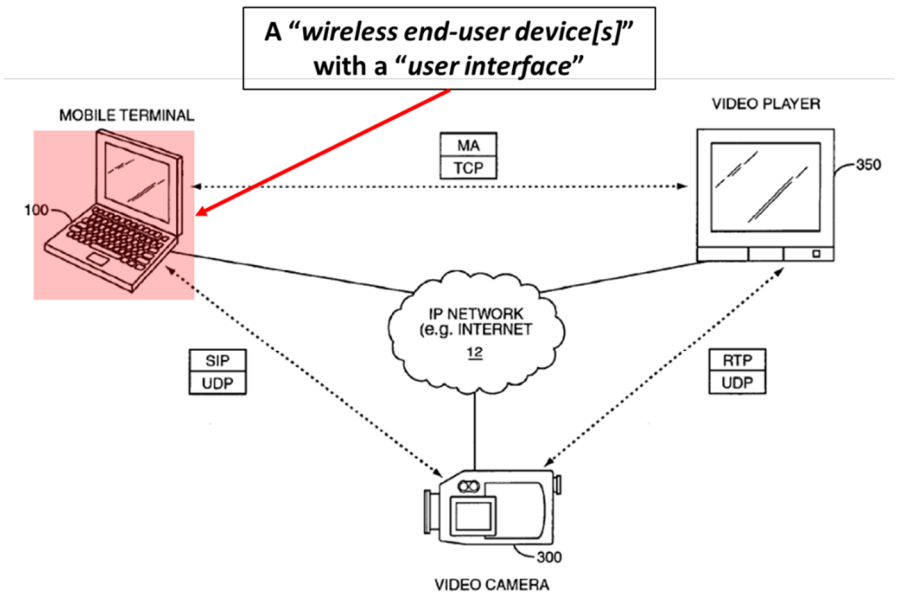

FIG. 11

SAMSUNG-1041, FIG. 11.

[13]

The '918 patent does not define the feature "***traffic flow***," but generally describes that applications generate "***traffic flows***" (e.g., data transmitted and received when performing activities over a network). SAMSUNG-1001, 62:16-20, 81:36-45, 88:47-53, 89:23-25, 93:42-46, 109:55-59, 120:7-10, FIG. 36; SAMSUNG-1003, ¶81.

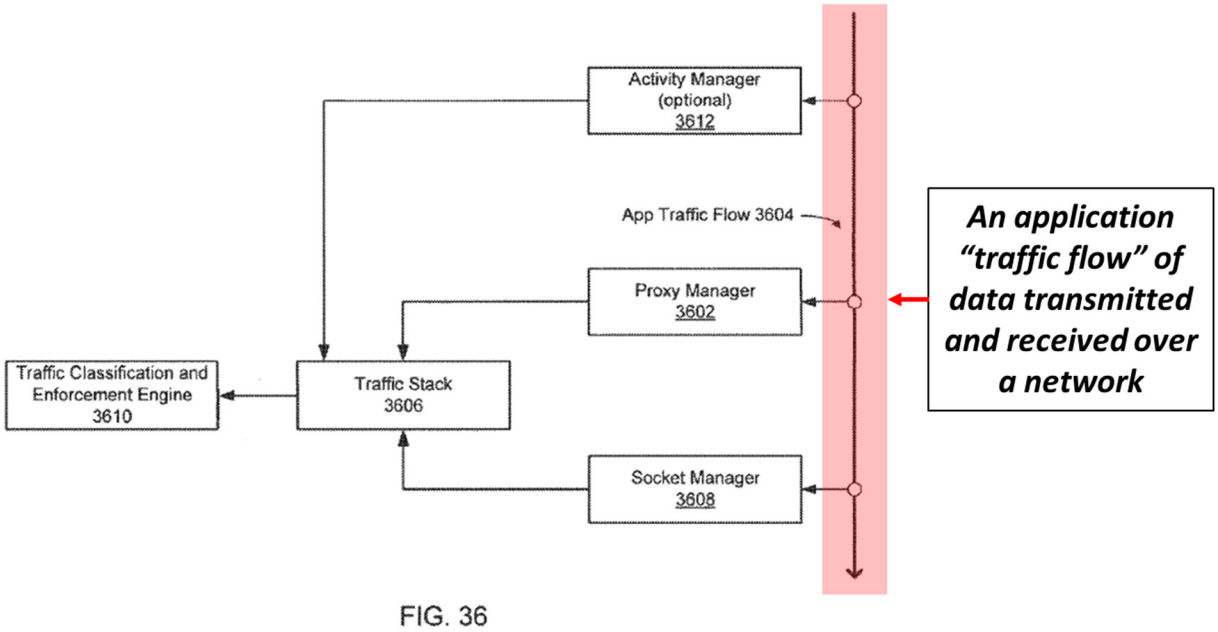

SAMSUNG-1001, FIG. 36.

As described above, Vadde's "policy" based system enforces restrictions on application data usage based on "usage limits" ("***enforce an application-based usage control on network data usage***"). SAMSUNG-1042, ¶¶[0015]-[0016], [0025]-[0026]; *see supra* [1.6]. In particular, Vadde's restrictor component 122

("***one or more service classification and measurement agents***" and an "***enforcement agent***") monitors transmitted data to determine "attributes 112," which include an "application name" which is given a "Program ID" ("***associate one or more traffic flows … with the device application that makes the data transfer request***"). SAMSUNG-1042, ¶¶[0024], [0032]; *see supra* [1.6]. Additionally, the data transmitted and received by the Bennett-Vadde device's applications ("***traffic flows***") includes streamed media data ("***one or more traffic flows, comprising the media object network data transfers***"). SAMSUNG-1041, ¶¶[0017]-[0018], [0024], [0070], [0076]; *see supra* [1.4]; SAMSUNG-1003, ¶82.

Vadde's restrictor component "monitors the data transmitted and/or received by the applications 110" and applies a "policy" that "prevents the applications 110 from transmitting and/or receiving data in excess of the data usage limits 116" ("***enforce an application-based usage control on network data usage by one or more of the device applications***"). SAMSUNG-1042, ¶[0022]; *see supra* [1.6]; SAMSUNG-1003, ¶83. Additionally, because Vadde's enforcement of policies is per application, the application of a policy in response to data usage is "***based on the association between the one or more traffic flows and the device application***." *Id*.

Claims 14 and 19

The below claims are rendered obvious for similar reasons as discussed in

the analysis for the corresponding claim listed in the table below. SAMSUNG-1003, ¶84.

Claim	Corresponding Claim
14.pre	1.pre-1.1
14.1	1.2-1.3
14.2	1.4
14.3	1.5
14.4	1.6
19.pre	1.pre
19.1	1.1
19.2	1.2
19.3	1.3
19.4	1.4, 3
19.5	1.5, 8
19.6	1.6, 2

B. [GROUND 1B] – Bennett, Vadde, and Riggs render claims 4-6, 11, and 15-17 obvious

1. Overview of Riggs

Riggs discloses a "media player" with an integral "log report generator" that generates a "log report" of "metadata" associated with media. SAMSUNG-1043,

5:20-6:45, FIG. 1. Riggs' metadata includes "application name," "URL," "publisher information," and other information particular to a content source or publisher. SAMSUNG-1043, 1:58-2:5, 6:32-45, 10:13-23, 11:18-31, 16:28-33, FIG. 2; SAMSUNG-1003, ¶34.

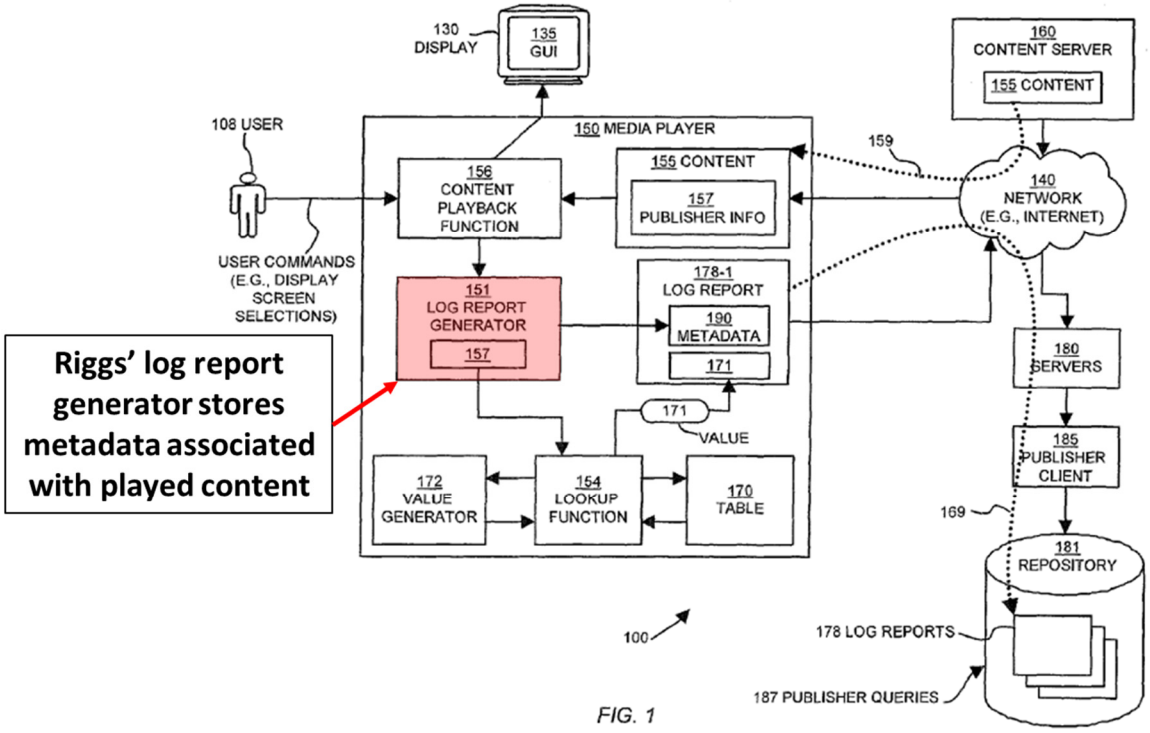

SAMSUNG-1043, FIG. 1.

2. The combination of Bennett-Vadde and Riggs

It would have been obvious for a POSITA to incorporate Riggs's techniques of logging metadata associated with media—to include Riggs' log generators and log reports—into the Bennett-Vadde device to log metadata associated with the media played by applications. SAMSUNG-1043, 1:58-2:5, 6:32-45, 10:13-23,

11:18-31, 16:28-33, FIG. 2. Riggs' log reports would have also provided a convenient way to track and display per application data usage determined by Vadde's restrictor component. SAMSUNG-1041, ¶¶[0002], [0025], [0076], FIGS. 3, 9, 11; SAMSUNG-1042, ¶[0021], FIG. 1; SAMSUNG-1043, 6:25-31. Dr. Traynor notes that a POSITA would have been motivated to make this combination for multiple reasons, including: (1) increased insight into a user's data usage patterns, (2) convenient tracking and sharing of usage data, and (3) increased granularity of data usage tracking on a per-media player basis. SAMSUNG-1042, ¶¶[0002], [0009], [0018], [0024], [0027]-[0028]; SAMSUNG-1043, 1:58-2:5, 6:32-45, 10:13-23, 11:18-31, 11:54-13:46, 16:28-33, FIG. 2; SAMSUNG-1003, ¶35.

Specifically, Riggs discloses that, by "record[ing] events such as occurrence of playback commands and related playback information," a publisher can "identify corresponding portions of such content that are most appealing to a viewer." SAMSUNG-1043, 1:49-57; 14:27-36. Incorporating Riggs' techniques of logging metadata associated with played content would have enhanced the ability of third-party publishers to recommend relevant media to the user of the Bennett-Vadde device (e.g., a song from a music streaming service, or a video from a movie streaming service). SAMSUNG-1041, ¶¶[0024], [0076]; SAMSUNG-1043, 1:49-57, 14:27-36; SAMSUNG-1003, ¶36. Additionally, Riggs discloses that, with user consent, this information can be shared between publishers, allowing many such

streaming services to gain insight into a user's preferences without the need for a publisher to collect this data organically. SAMSUNG-1043, 1:49-57, 2:35-40, 14:27-36.

Riggs also teaches that a specific media player may be relevant to streamed media, and to that end, data specifying the type of media player that viewed the media can be collected. SAMSUNG-1043, 11:54-14:26, FIG. 3. This is particularly relevant to Bennett, which discloses that "one <u>or more</u> media players" can be included on any given device. SAMSUNG-1041, ¶[0025]. Riggs' techniques allow for the collection of data from multiple media players to be standardized such that this data can be easily correlated and analyzed. SAMSUNG-1043, 11:54-14:26, FIG. 3; SAMSUNG-1003, ¶37.

Incorporating Riggs' techniques into the Bennett-Vadde device would have been nothing more than the application of known techniques (e.g., logging metadata according to Riggs) to a known structure (e.g., Bennett-Vadde's device) to yield predictable results (e.g., the logging of metadata associated with media played by the Bennett-Vadde device's media players). *KSR Int'l Co. v. Teleflex Inc.*, 550 U.S. 398, 417 (2007). As Dr. Traynor explains, a POSITA would have expected success in implementing this combination because logging metadata associated with media played by the Bennett-Vadde media players using Riggs' techniques simply applies Riggs' teachings—with little modification—to a device that

Riggs explicitly discloses can implement its techniques (e.g., a media player). SAMSUNG-1003, ¶38. Indeed, the modification would have involved routine programming ability that would have been well within the skill of a POSITA. *Id.*

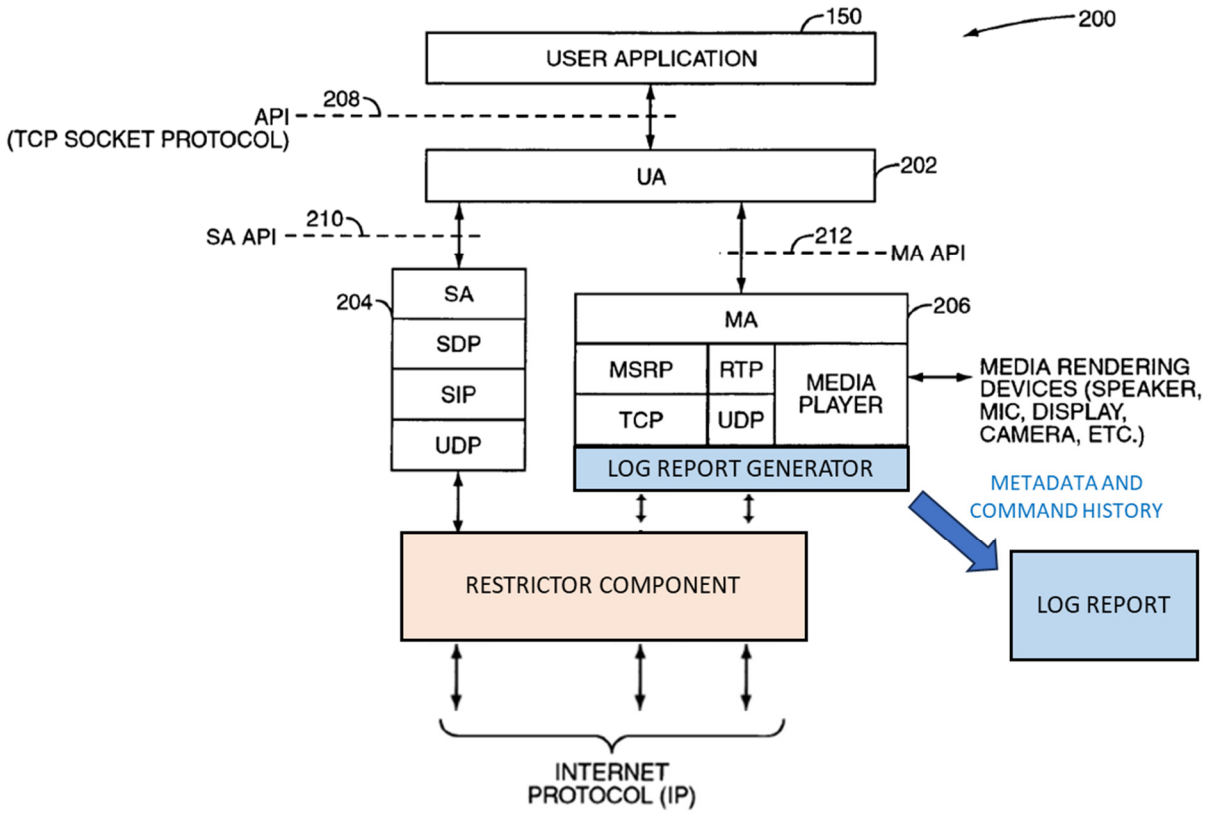

SAMSUNG-1041, FIG. 3 (as modified by Vadde and Riggs).

3. Analysis

[4]

Riggs discloses a "media player" with a "log report generator" that generates a "log report" of "playback commands" and "metadata" associated with played media ("***store an entry comprising the at least one of the application name,***

the application identifier, or the process identifier for each of the device applications that makes a data transfer request"). SAMSUNG-1043, 1:58-2:5, 6:32-45, 10:13-23, 11:18-31, 16:28-33, FIG. 2. Examples of Riggs "metadata" include an "[a]pplication [n]ame" ("***application name***") and "media feed URL" ("***process identifier***"). *Id*. Riggs' metadata also includes "a URL associated with the content being played back" ("***each stored entry further comprising information about the corresponding network resource identifier for the data transfer request***"). SAMSUNG-1043, 6:32-45, 10:13-23, 11:18-31, 16:28-33; SAMSUNG-1003, ¶85.

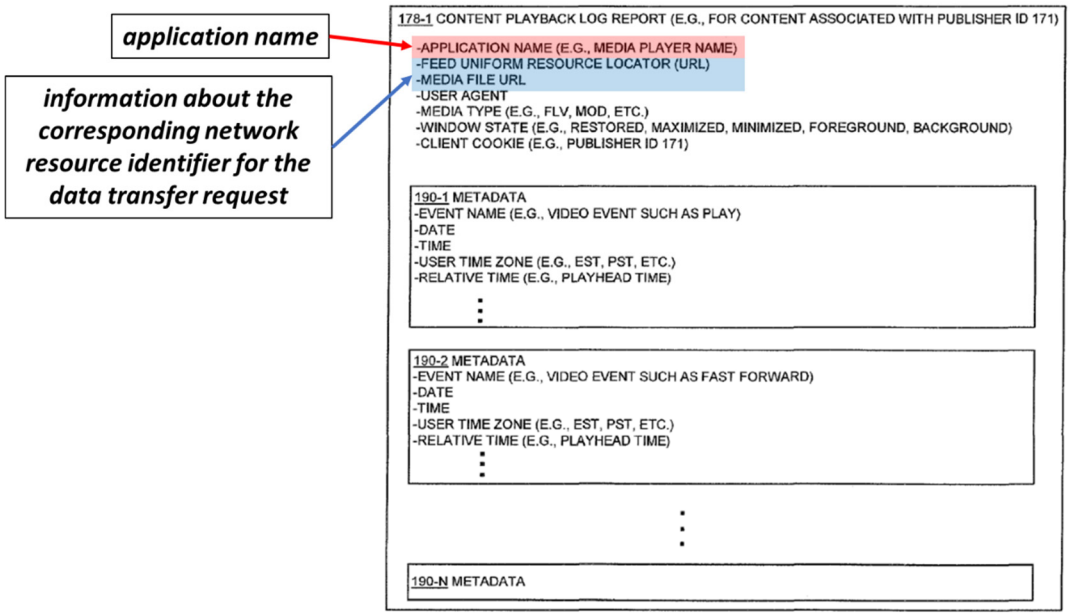

FIG. 2

SAMSUNG-1043, FIG. 2.

Additionally, in implementing the Bennett-Vadde-Riggs combination, a

POSITA would have recognized and found obvious that other information, as described in Bennett and Vadde, would have been included in the metadata stored in a log report, for example, the Program ID disclosed in Vadde (an "***application name***" and "***identifier***"). *See supra*, [2]. This would have allowed a POSITA to leverage the existing features of Bennett and Vadde and adapt them to perform Riggs' techniques in a predictable way that achieves the benefits of Riggs' logging in the context of the media transfers of Bennett-Vadde. SAMSUNG-1003, ¶86.

As described above, in the combination, when monitoring data usage for each of the applications, the Bennett-Vadde-Riggs device would have additionally logged "playback commands" and "metadata" describing the retrieved media objects in a "log report," as described in Riggs ("***to associate wireless network data usage for the media object network data transfers with the device application that makes the data transfer request for the media object further comprises to store an entry comprising …***"). *See supra*, §III.B.2. Doing so would have provided the benefits described above, including gaining increased insight into a user's data usage patterns. *See supra*, §III.B.2.; SAMSUNG-1003, ¶87.

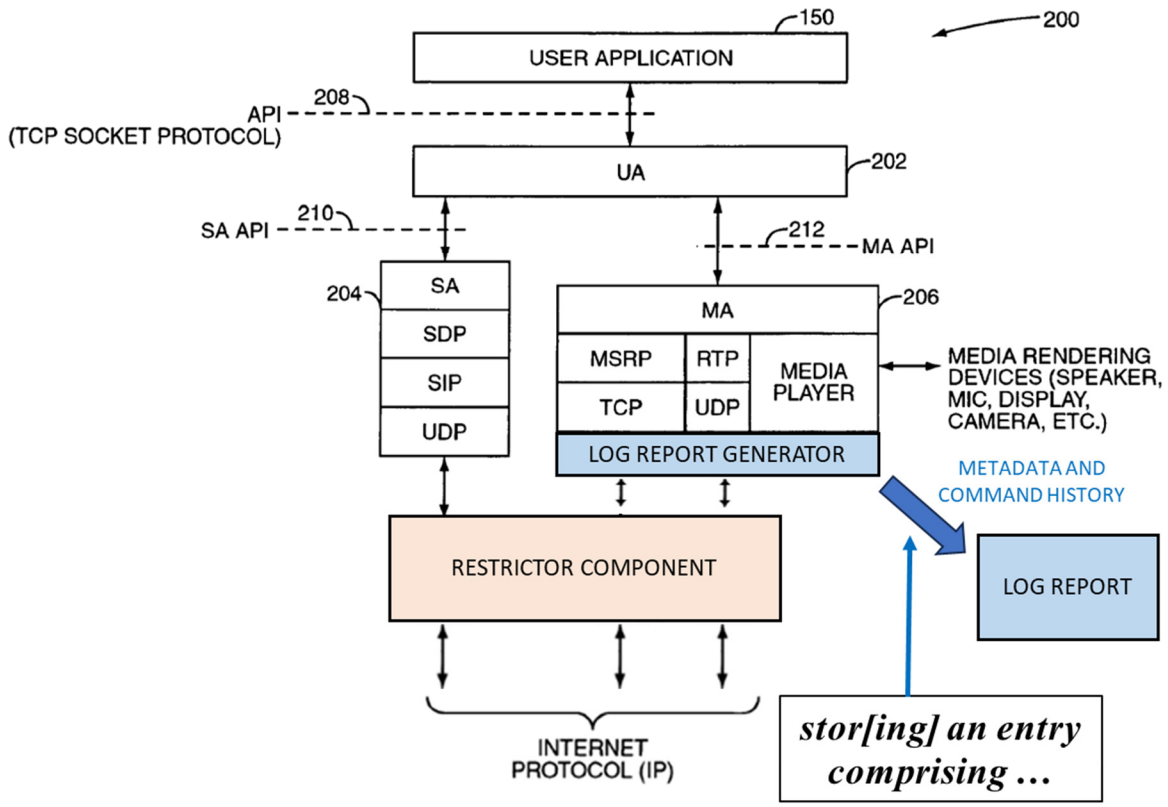

SAMSUNG-1041, FIG. 3 (as modified by Vadde and Riggs).

[5]

As described above, Riggs discloses a "log report generator" ("***a requesting application storing function***") within the "media player" ("***within the media services manager***") that generates a log report of metadata associated with played content. SAMSUNG-1043, 5:23-32, 6:32-45, 11:45-49, FIG. 1; SAMSUNG-1001, 112:53-61, 114:27-34 (describing the "requesting-application storing function"); *see supra* [4] (describing "log reports"); SAMSUNG-1003, ¶88.

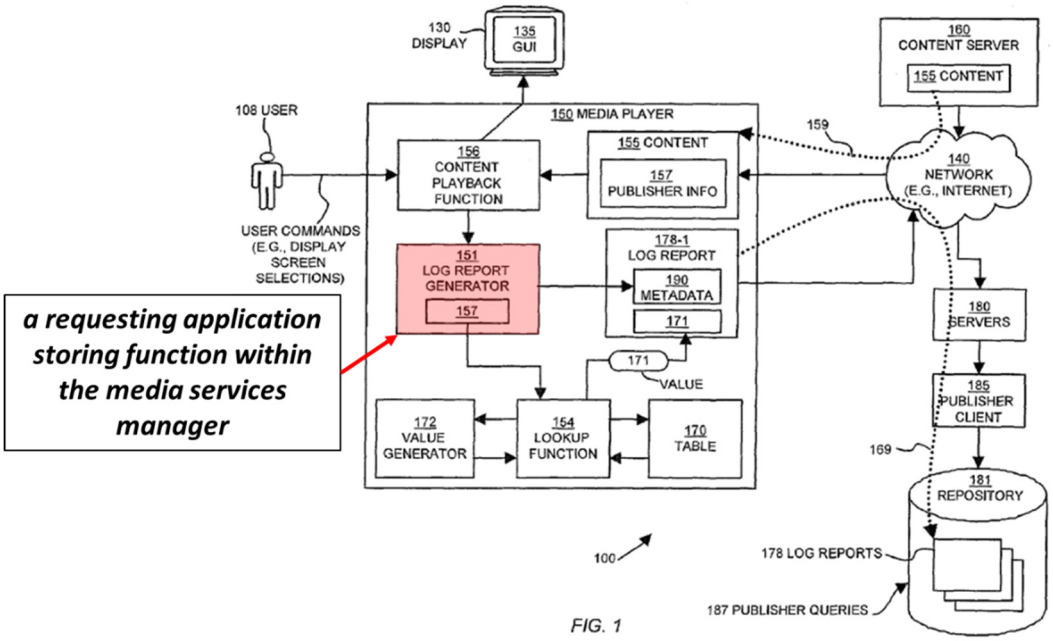

FIG. 1

SAMSUNG-1043, FIG. 1.

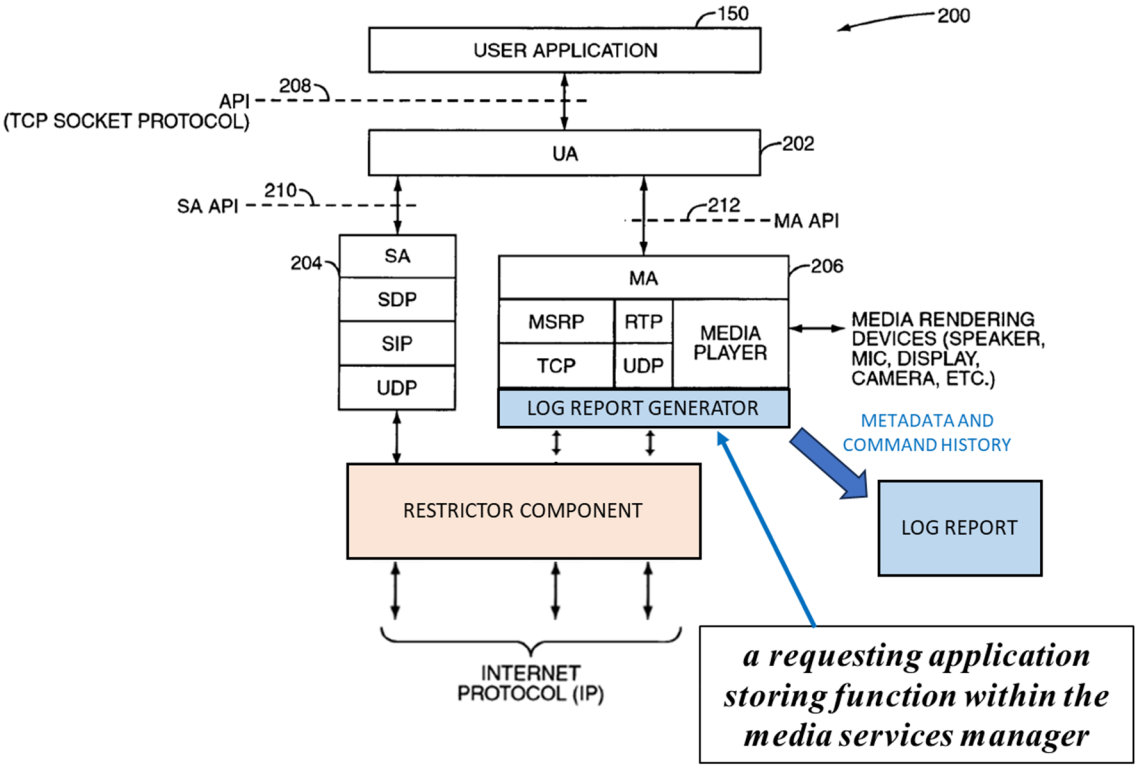

SAMSUNG-1041, FIG. 3 (as modified by Vadde and Riggs).

[6]

Riggs discloses that its techniques can be implemented on multiple media players "350-1" and "350-2" ("***a first media service manager [and] … a second media service manager of a different type than the first media service manager***") that each include "log reports" from a respective "log report generator" ("***a first requesting application storing function [and] … a second requesting application storing function within the second media service manager***"). SAMSUNG-1043, 11:54-13:46; SAMSUNG-1003, ¶89. Additionally, Riggs demonstrates that these two media players are "***of a different type***," at least because each of media players 350-1 and 350-2 generate log reports using different "unique values." *Id*.

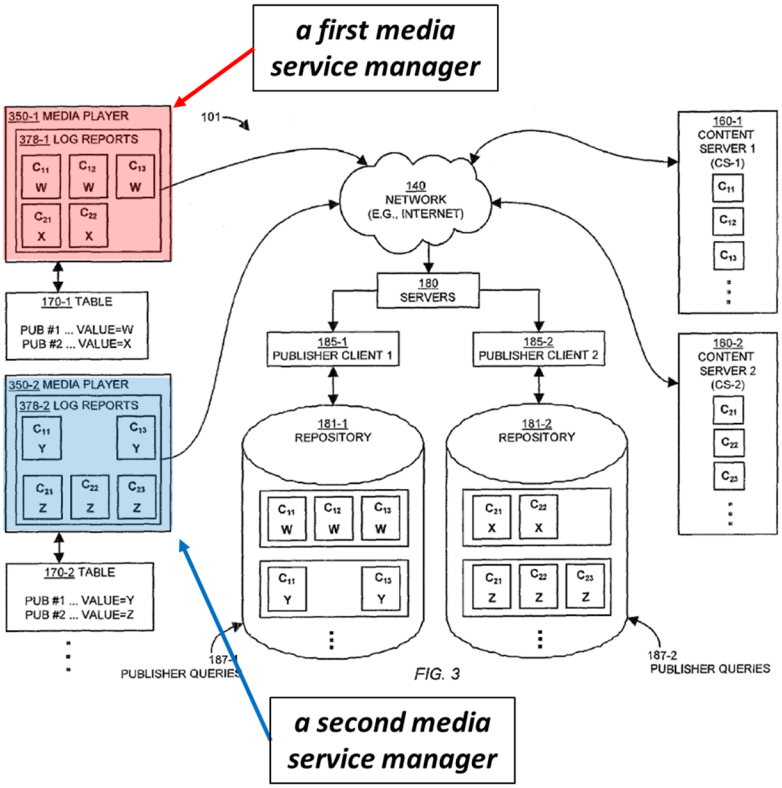

SAMSUNG-1043, FIG. 3.

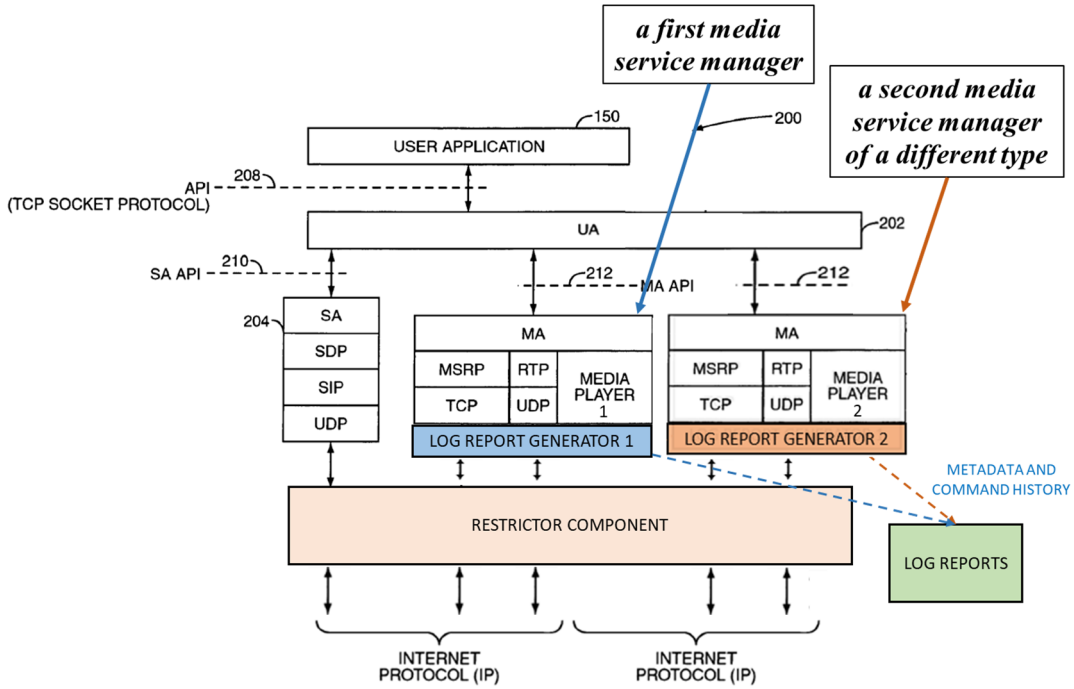

SAMSUNG-1041, FIG. 3 (as modified by Vadde and Riggs).

Although Riggs does not explicitly disclose that media players 350-1 and 350-2 are operating on the same device, Riggs does not otherwise exclude or disparage this arrangement. *See generally*, SAMSUNG-1043. Additionally, Bennett describes that its media client includes "one <u>or more</u> media players," and as Dr. Traynor explains, a POSITA would have understood and found obvious that the Bennett-Vadde-Riggs device would have included multiple media players, at least because Riggs describes that media players can be embodied in "browsers" (a plurality of which can operate on the same device simultaneously). SAMSUNG-1041, ¶[0025]; SAMSUNG-1043, 1:13-24, 1:58-62, 5:33-38; SAMSUNG-1003, ¶90; *see In re Harza*, 274 F.2d 669, 671 (CCPA 1960) (holding that mere duplication of parts absent some unexpected result carries no patentable significance).

Further, the use of two or more media agents in the Bennett device would have enabled simultaneous transmission and reception of media over different protocols, for example, "MSRP" and "RTP" (e.g., MSRP text communications during an active RTP stream). SAMSUNG-1041, ¶¶[0053]-[0054], [0066], [0072].

[11.1]

See supra, [4], [5]. As described above, Riggs's "log report generator" ("***a requesting application storing agent***") generates a "log report" of metadata associated with played content ("***store application identification information and network resource identification information***"). SAMSUNG-1043, 1:58-2:5, 6:32-45, 10:13-23, 11:18-31, 16:28-33, FIG. 2. In the combination, metadata and data usage data is stored for "***each device application that makes a data transfer request using the second API***," at least because Vadde's techniques of data monitoring are performed for each application. SAMSUNG-1042, ¶¶[0022], [0024]-[0026], [0029]-[0032]; *see supra* [1.6]; SAMSUNG-1003, ¶91.

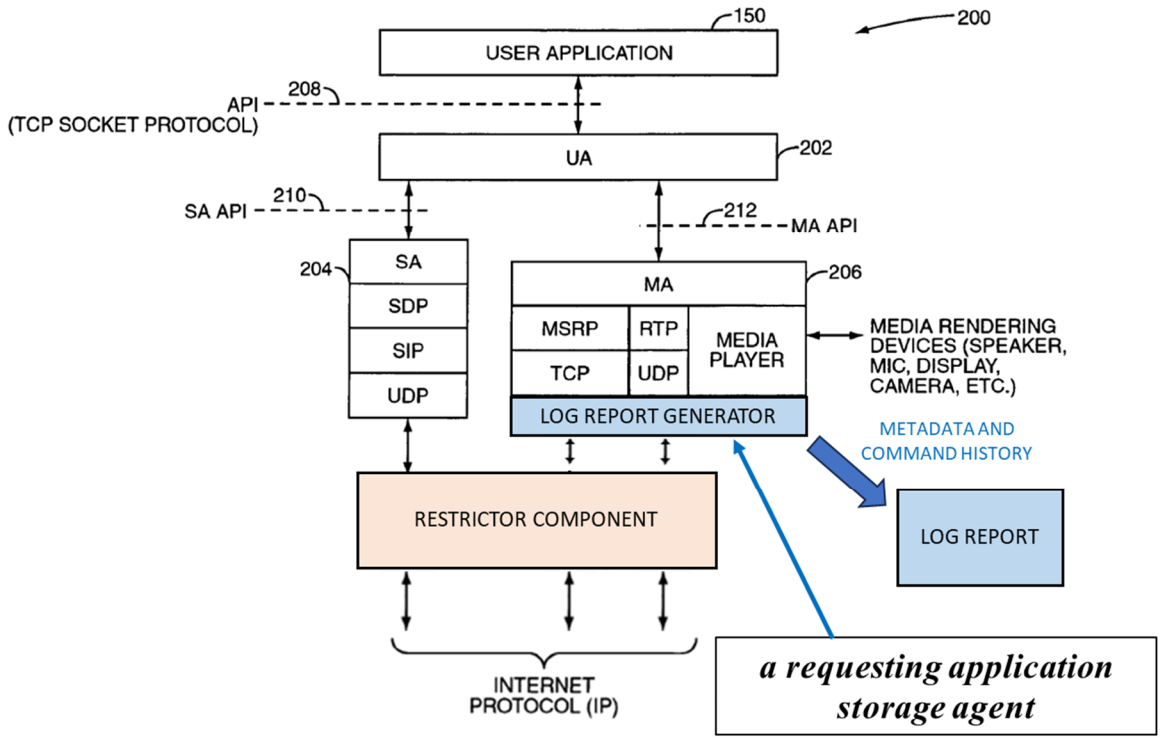

SAMSUNG-1041, FIG. 3 (as modified by Vadde and Riggs).

[11.2]

The '918 Patent describes that "network data flow identifiers" include "a data flow tag, an IP address, a TCP-IP identifier, a layer 7 identifier, a socket tuple, etc." SAMSUNG-1001, 113:3-9; SAMSUNG-1003, ¶92.

As described above, Vadde's "restrictor component" ("***a network data flow storage agent***") "monitors the data transmitted and/or received by the applications 110" for "attributes 112" ("***identify network data flow identification information***") that include, among other things, a "network destination" and "port" ("***network data flow identification information***"). SAMSUNG-1042, ¶¶[0022], [0024]. Additionally, Bennett's requests include "a network address of a remote

host from which media connections will be accepted," for example, a "fully qualified network address" (e.g., an IP address—"***network data flow identification information***"). SAMSUNG-1041, ¶¶[0034], [0050]-[0056], Table-3; *see supra* [1.4]; SAMSUNG-1003, ¶93.

Additionally, as described above, because the restrictor component monitors data transmitted for each application, it monitors "***each network data flow associated with the media service manager***." SAMSUNG-1042, ¶[0016]; *see supra* [1.6]; SAMSUNG-1003, ¶94.

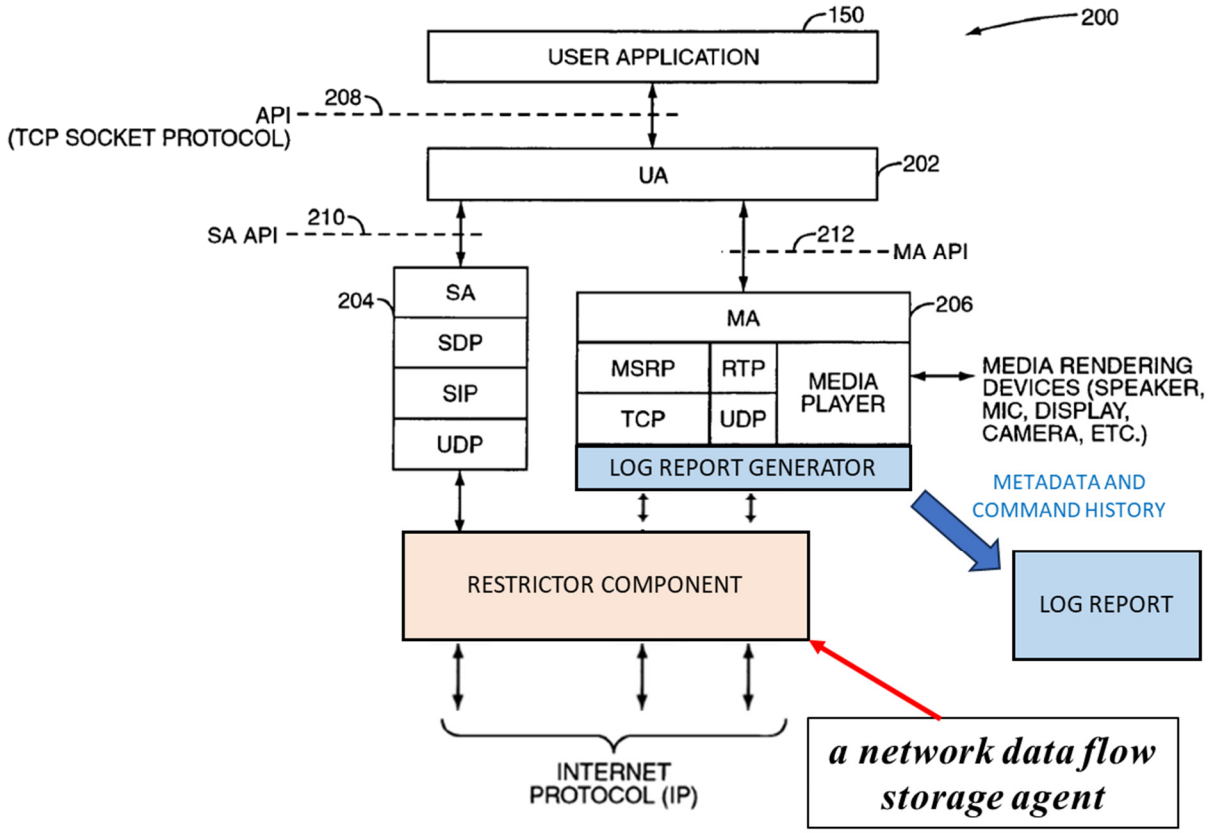

SAMSUNG-1041, FIG. 3 (as modified by Vadde and Riggs).

[11.3]

As described above, Vadde's "restrictor component" ("***an association agent***") "monitors the data transmitted and/or received by the applications 110" for "attributes 112." SAMSUNG-1042, ¶¶[0022], [0024]; *see supra* [1.6]. A POSITA would have recognized and found obvious that Vadde's restrictor component would have "***match[ed] the network data flow identification information for a network data flow***" to "***application identification information associated with [that] network data flow***," at least because Vadde's restrictor component is already capable of distinguishing per-application usage and this matching would have been needed to produce useful data usage and metadata patterns for each application. SAMSUNG-1042, ¶¶[0016], [0022]; SAMSUNG-1003, ¶95. Indeed, Vadde's policies are intended to control the usage of a <u>particular</u> application based on that <u>particular</u> application's data usage, and therefore, "***data flow[s]***" and "***application identification information***" would have been obvious to have been "***match[ed]***" to the corresponding application. *Id*.

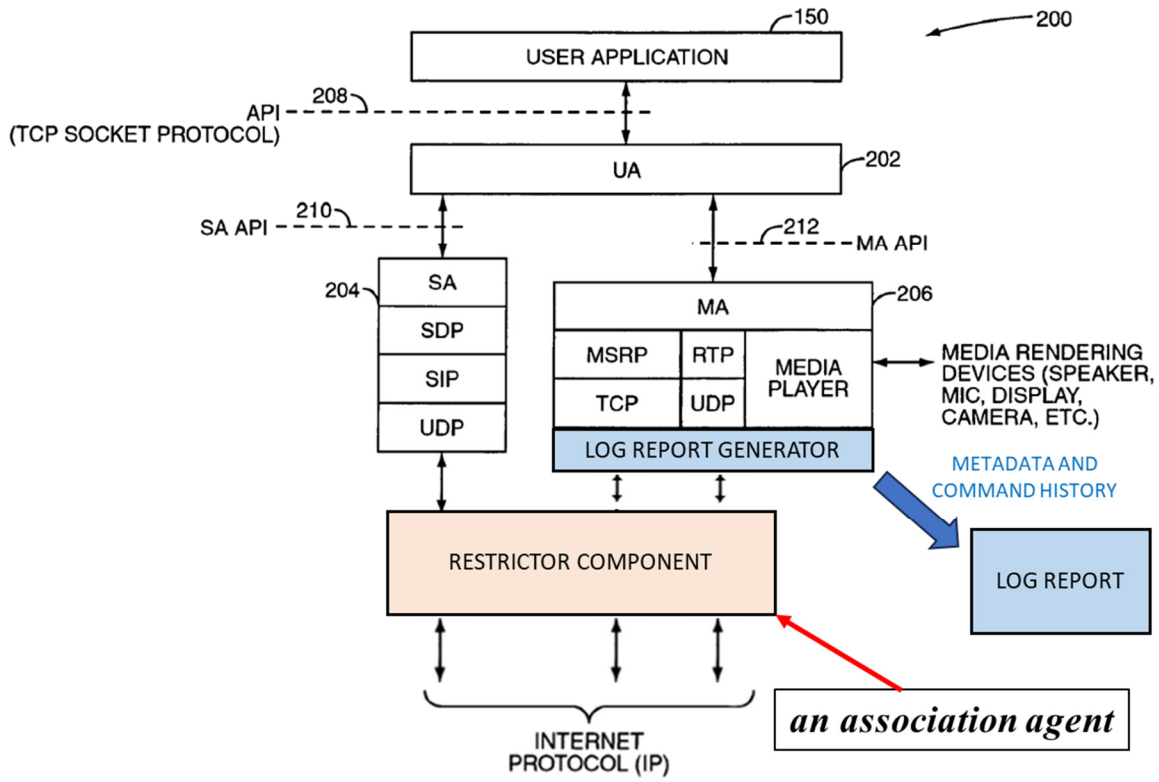

SAMSUNG-1041, FIG. 3 (as modified by Vadde and Riggs).

Claims 15-17

The below claims are rendered obvious for similar reasons as discussed in the analysis for the corresponding claim listed in the table below. SAMSUNG-1003, ¶96.

Claim	Corresponding Claim
15.pre	1.pre
15.1	1.1
15.2	1.2
15.3	1.3

Claim	Corresponding Claim
15.4	1.4, 3
15.5	1.5
15.6	1.6, 2, 4
16	5
17	6

C. [GROUND 1C] – Bennett, Vadde, Riggs, and Hendrickson render claims 7, 12, and 18 obvious

1. Overview of Hendrickson

Hendrickson discloses a system for measuring "wireless device and wireless network usage and performance metrics" which collects "device parametric data" and "transmit[s] the collected data via a wireless communication network to one or more control centers for processing." SAMSUNG-1054, 4:37-5:38, 7:25-8:6, FIGS. 1-2. Hendrickson collects and stores its data into a local "storage module 265" prior to transmission to the control center because, as Hendrickson notes, there may be "no network connection available to transmit" or "immediate transfer of data [may] result in a poor user experience." SAMSUNG-1054, 12:29-42; SAMSUNG-1003, ¶39.

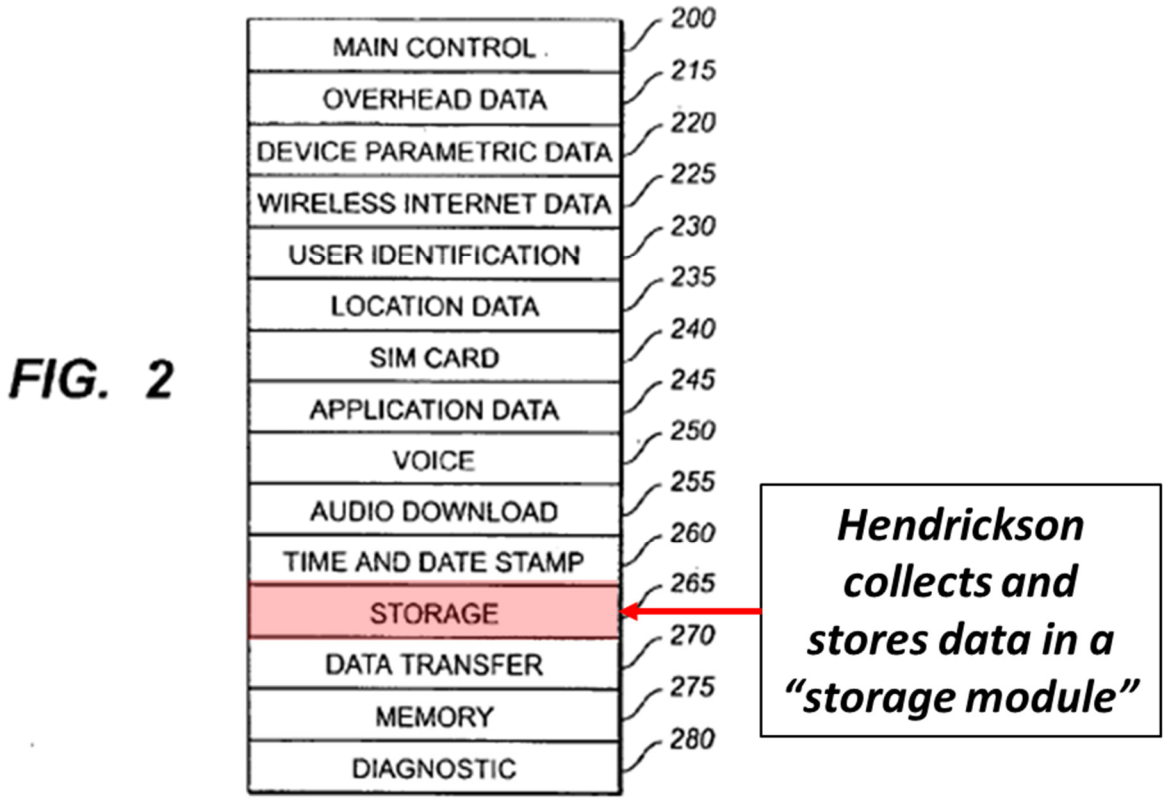

SAMSUNG-1054, FIG. 2.

2. The combination of Bennett-Vadde-Riggs and Hendrickson

It would have been obvious for a POSITA to incorporate Hendrickson's techniques of storing data associated with played media content (e.g., using a storage module) into the Bennett-Vadde-Riggs device to store log reports generated by Bennett-Vadde-Riggs' log report generators. SAMSUNG-1043, 1:58-2:5, 6:32-45, 10:13-23, 11:18-31, 16:28-33, FIG. 2; SAMSUNG-1054, 12:29-42; *see supra* §§III.B.[4], III.B.[6]. As Dr. Traynor explains, a POSITA would have recognized and found obvious that generated log reports would have needed to have been

stored locally on the device at least temporarily, at least to preserve the data across device operating cycles in the absence of a network connection. SAMSUNG-1054, 12:29-42 (noting that storing data is prudent when "there is no network connection available to transmit" or "immediate transfer of data would result in a poor user experience"); *see supra* §§III.B.[4], III.B.[6]; SAMSUNG-1003, ¶40.

Incorporating Hendrickson's techniques into the Bennett-Vadde-Riggs device would have been nothing more than the application of known techniques (e.g., storing data in the form of log reports) to a known structure (e.g., Bennett-Vadde-Riggs' device) to yield predictable results (e.g., the storing of log reports associated with media played by the Bennett-Vadde-Riggs device). *KSR Int'l Co. v. Teleflex Inc.*, 550 U.S. 398, 417 (2007). As Dr. Traynor explains, a POSITA would have expected success in implementing this combination because the storing of Bennett-Vadde-Riggs' log reports using Hendrickson's techniques simply applies Hendrickson's teachings—with little modification—to a device that performs the same functions that Hendrickson envisions within its own disclosure (e.g., a system that logs metadata associated with content played by a media player). SAMSUNG-1003, ¶41. Indeed, the modification would have (1) involved routine programming ability that would have been well within the skill of a POSITA, and (2) leveraged the existing infrastructure of the base references in a way that was already well known in the art (e.g., using the device memory that Bennett, Vadde,

and Riggs all individually disclose and render obvious). SAMSUNG-1041, ¶[0029] ("[t]he host device includes memory in which to store code implementing the present invention"); SAMSUNG-1042, ¶¶[0011]-[0014], [0017] (describing a device "memory area 108"); SAMSUNG-1043, 14:37-15:2, FIG. 4 (describing a "computer system" with a "memory system 112"); SAMSUNG-1003, ¶41.

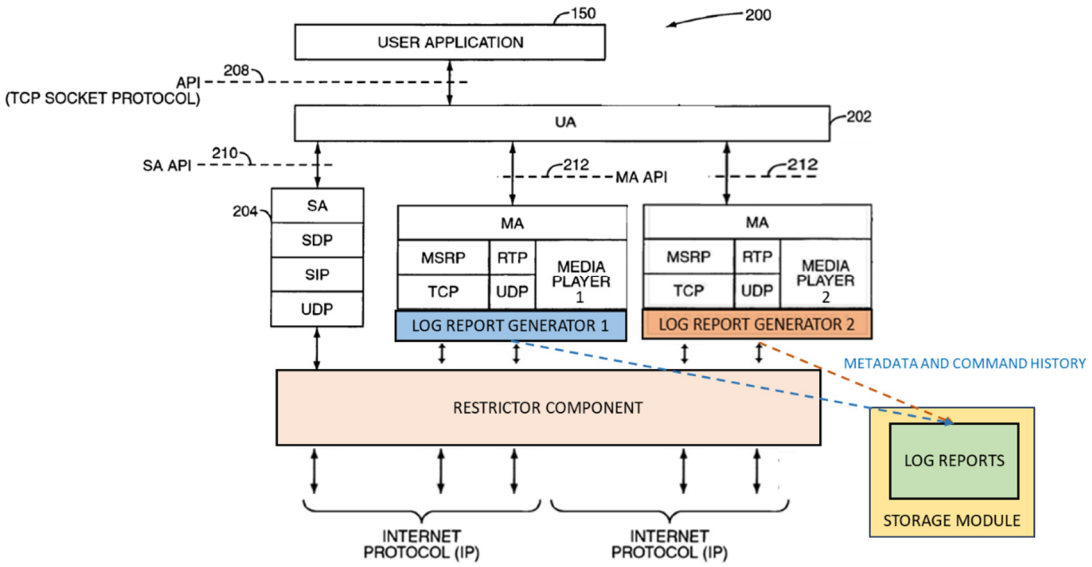

SAMSUNG-1041, FIG. 3 (as modified by Vadde, Riggs, and Hendrickson).

3. Analysis

[7]

The '918 Patent does not define a "***usage and classification database***" but rather describes that "the results of the service usage classification or accounting can be stored in a local device (or operating system) database" and that the stored information "can be provided to other applications, operating system service functions, other device software functions, or network-based service classification or

accounting functions." SAMSUNG-1001, 113:46-55; SAMSUNG-1003, ¶97.

As described above, Riggs' "log report generators" ("***first and second requesting application storing functions***") generate "log reports" of "metadata" associated with content played on a media player ("***application association information***"). SAMSUNG-1043, 1:58-2:5, 6:32-45, 10:13-23, 11:18-31, 16:28-33, FIG. 2; *see supra* [4], [6]. As described above, Riggs' log report generators are "***one or more service classification and measurement agents***" and thus "***receive application association information stored by the first and second requesting application storing functions***." *See supra*, §III.B.[5]; SAMSUNG-1003, ¶98.

As Dr. Traynor explains, a POSITA would have recognized and found obvious that the generated log reports would have been stored in a local repository on the device ("***usage and classification database***"), at least because this storage would have been needed to preserve the data across device operating cycles in the absence of a network connection. SAMSUNG-1054, 12:29-42; SAMSUNG-1003, ¶99. Moreover, the Bennet-Vadde-Riggs device would have included a means for electronic storage of files, like log reports. SAMSUNG-1041, ¶[0029] ("[t]he host device includes memory in which to store code implementing the present invention"); SAMSUNG-1042, ¶¶[0011]-[0014], [0017] (describing a device "memory area 108"); SAMSUNG-1043, 14:37-15:2, FIG. 4 (describing a "computer system"

with a "memory system 112"); SAMSUNG-1003, ¶99.

To the extent that a POSITA would not have found it obvious that Rigg's log reports are stored locally on the device prior to transmission, Hendrickson discloses a "storage module 265" ("***usage and classification database***") on a mobile device as part of a system for measuring "usage and performance metrics" for applications operated on the mobile device. SAMSUNG-1054, 6:40-7:11, 12:29-42, FIG. 2; SAMSUNG-1003, ¶100. The storage module 265 is responsible for "collecting information from each data module and encrypting, compressing, and storing the data in log file format in the non-volatile memory locations of the wireless device" and "temporarily stor[ing] data before being handled by the Data Transfer Module" which transmits the collected data (a "***usage and classification database***" that stores data "local[ly]" such that data "can be provided to other applications, operating system service functions, other device software functions, or network-based service classification or accounting functions"). SAMSUNG-1054, 12:29-42; SAMSUNG-1001, 113:46-55. In the combination, the storage module 265 would have stored log reports generated by the Bennett-Vadde-Riggs log report generators, prior to these reports being transmitted for external consumption ("***maintain the usage and classification database based in part on the received application association information***"). SAMSUNG-1043, 1:58-2:5,

6:32-45, 10:13-23, 11:18-31, 16:28-33, FIG. 2; SAMSUNG-1054, 12:29-42 (noting that storing data is prudent when "there is no network connection available to transmit" or "immediate transfer of data would result in a poor user experience"); *see supra* §§III.B.[4], III.B.[6], II.C; SAMSUNG-1003, ¶100.

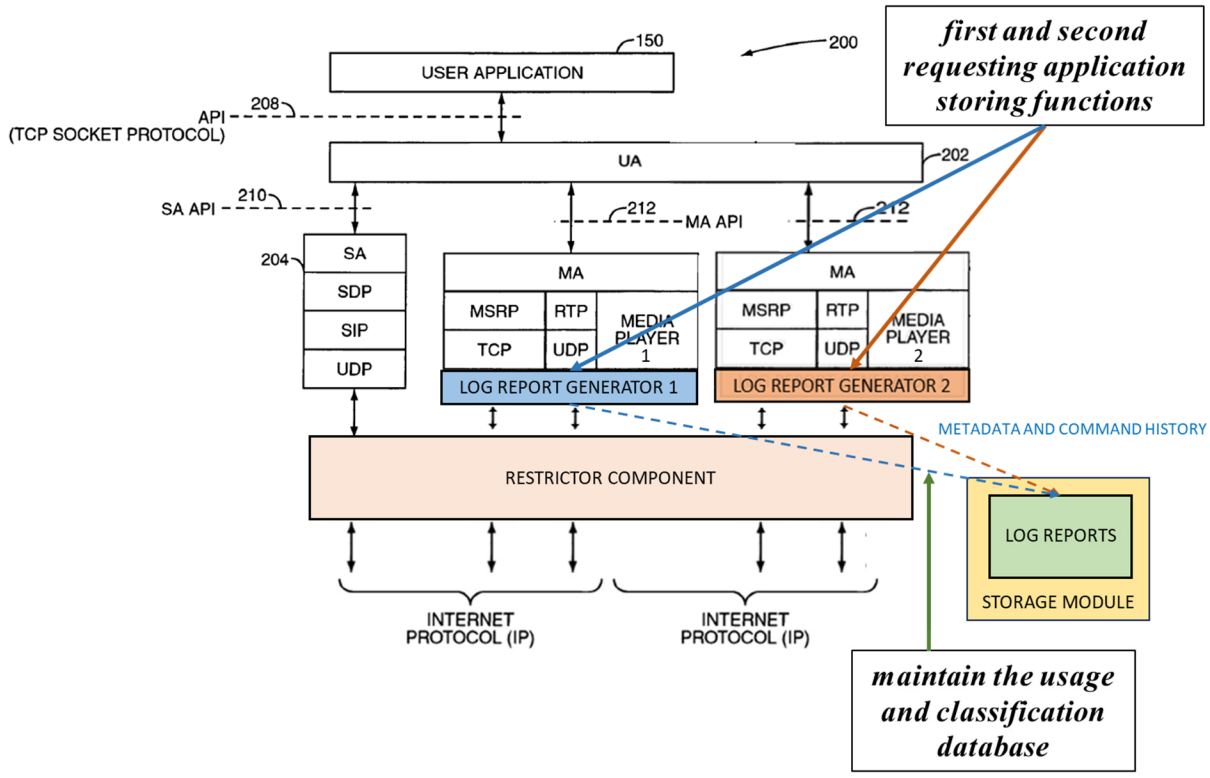

SAMSUNG-1041, FIG. 3 (as modified by Vadde, Riggs, and Hendrickson).

[12.1]

As described above, a POSITA implementing the Bennett-Vadde-Riggs combination would have recognized and found obvious that Rigg's log reports would have been a convenient way to log data usage determined from Vadde's restrictor component. *See supra*, §III.B.2; SAMSUNG-1003, ¶101. In the combination, Riggs' log report generators generate log reports which are then stored in

Hendrickson's "storage module 265" ("***a local database to store data usage***") which stores a record of metadata and data usage associated with played content for each application ("***data usage for network data transfers managed by the media service manager on behalf of a device application***"). SAMSUNG-1043, 1:58-2:5, 6:32-45, 10:13-23, 11:18-31, 16:28-33, FIG. 2; *see supra* [7]. Additionally, both Vadde and Riggs disclose that this information is "***classified by device application***" (particularly, using an application name or Program ID). SAMSUNG-1042, ¶[0014]; SAMSUNG-1043, 11:18-31; SAMSUNG-1003, ¶101.

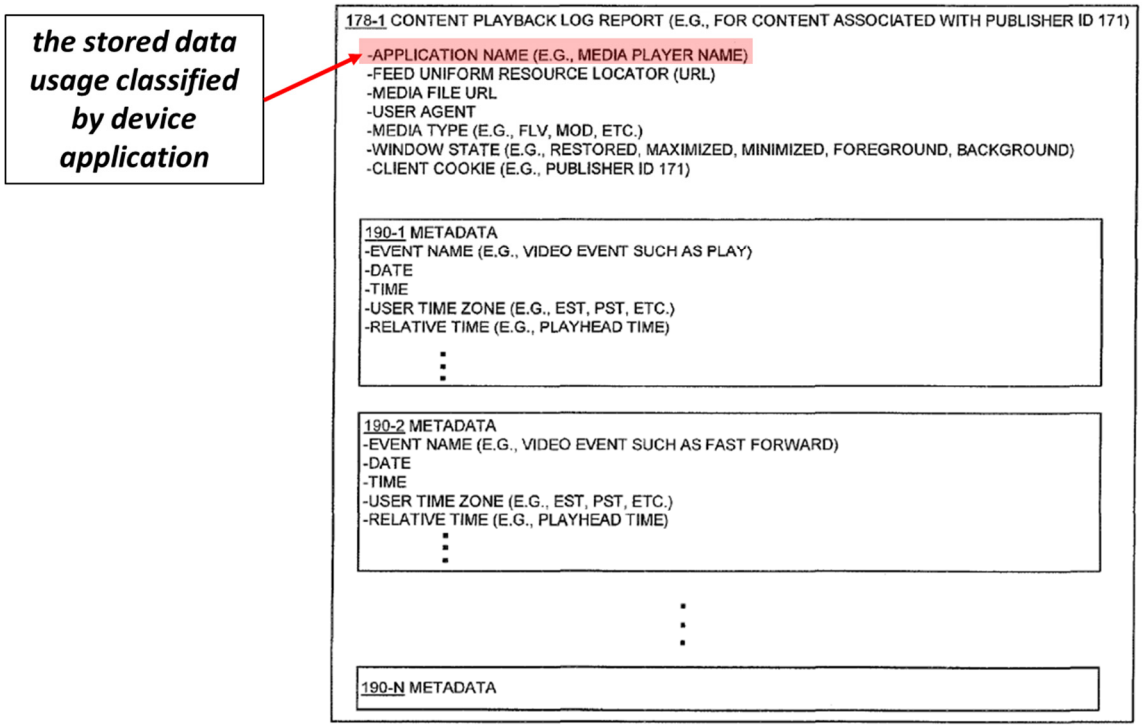

FIG. 2

SAMSUNG-1043, FIG. 2.

[12.2]

See supra, §III.A.4.[9]. SAMSUNG-1003, ¶102.

[12.3]

Vadde discloses a "user interface component 120" ("***a user interface display agent***") that is used for "displaying data to the user" ("***display the data usage classified by application to a user***"). SAMSUNG-1042, ¶[0021], FIG. 1. As Dr. Traynor explains, in the Bennett-Vadde-Riggs-Hendrickson combination, generated log reports for each application—including metadata and data usage—would have been displayed to the user via the "user interface component 120" and a "user interface" ("***the data usage classified by application to a user***"). SAMSUNG-1003, ¶103. Displaying log reports to the user would have enabled the user to monitor their per-application data usage and Vadde specifically notes that "usage patterns" (including data usage) are provided to the user "to evaluate each application" ("***the data usage classified by application to a user***"). SAMSUNG-1042, FIG. 2. Displaying log reports to the user would have also been a convenient way for the user to verify what information was being shared with publishers (particularly because Riggs discloses the need to obtain a user's "consent" before sharing data). SAMSUNG-1043, 1:39-48, 14:27-36.

FIG. 1

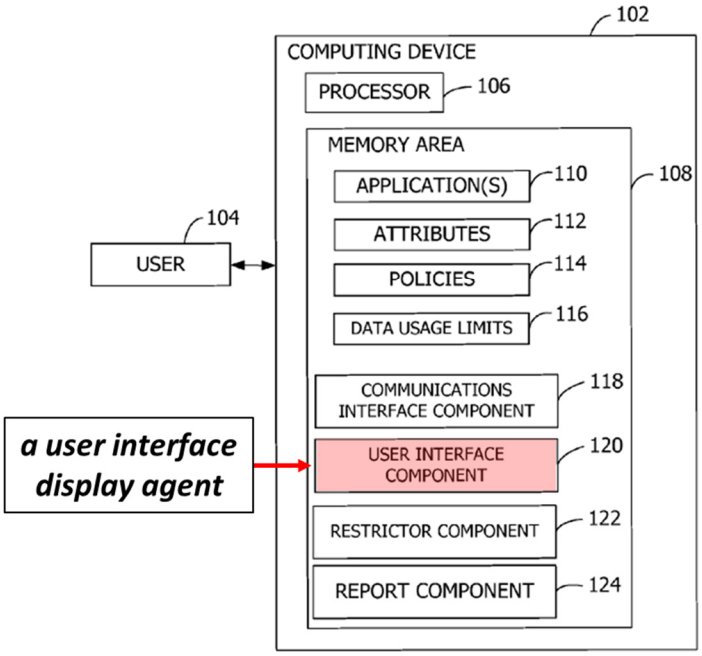

SAMSUNG-1042, FIG. 1.

FIG. 2

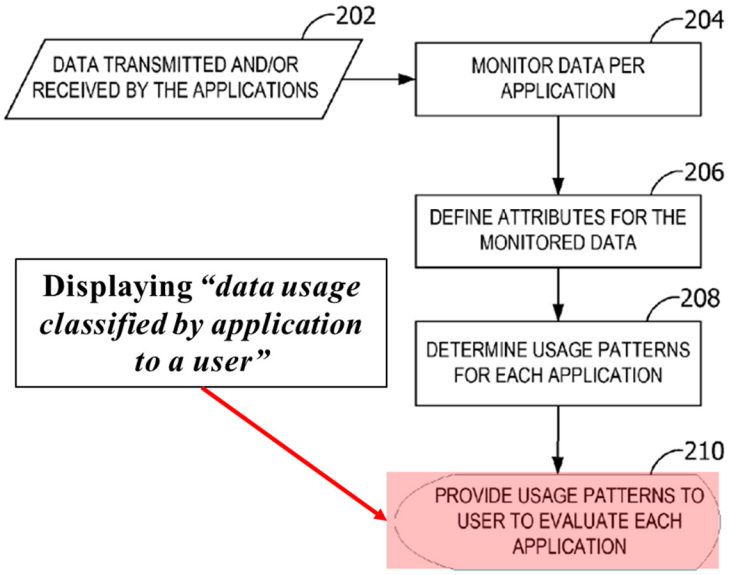

SAMSUNG-1042, FIG. 2.

[18]

As an initial matter, claim 17 repeats the same features recited in claim 7 above, with the substitution of a "***usage and classification reconciliation agent***" for "***the one or more service classification and measurement agents***." *See supra*, [7]. The '918 Patent does not define a "***usage and classification reconciliation agent***," but instead describes a "usage/classification reconciliation engine 3216" that "can track usage of [an] app, classify the app, and to the extent there is disagreement at different system locations, reconcile usage in accordance with rules." SAMSUNG-1001, 117:12-24; SAMSUNG-1003, ¶104.

As described above, Riggs' "log report generators" ("***first and second requesting application storing functions***") generate "log reports" which are then stored in Hendrickson's "storage module 265" ("***a usage and classification database***") which stores a record of "metadata" associated with played content ("***maintain the usage and classification database based in part on the received application association information***"). SAMSUNG-1043, 1:58-2:5, 6:32-45, 10:13-23, 11:18-31, 16:28-33, FIG. 2; *see supra*, [7]; SAMSUNG-1003, ¶105.

Vadde's restrictor component 122 "monitors the data transmitted and/or received by the applications 110 and determines whether the data usage limits 116 corresponding to each of the applications 110 have been exceeded or are about to

be exceeded." SAMSUNG-1042, ¶¶[0022], [0024]-[0026], [0029]-[0032]. As described above, in the combination, log reports are generated based on metadata determined from Riggs' log report generators and usage data determined by Vadde's restrictor component, both of which determine this information for each application. *See supra*, §§III.A.4.[1.6], III.B.3.[2], III.B.3.[4]. Accordingly, Riggs' log report generators, in combination with Vadde's restrictor component, are also "***a usage and classification reconciliation agent***" that "***receive[s] application association information stored by the first and second requesting application storing functions***" and "***maintain[s] the usage and classification database based in part on the received application association information***" at least because Riggs' log report generators receive data regarding application data usage for each application from Vadde's restrictor component. *See supra*, §§III.A.4.[1.6], III.A.4.[2], III.B.3.[4]; SAMSUNG-1001, 117:12-24; SAMSUNG-1003, ¶106.

D. [GROUND 1D] – Bennett, Vadde, Riggs, and Srikantan render claim 10 obvious

1. Overview of Srikantan

Srikantan discloses techniques for "streaming a media track to multiple clients using a single copy of the track's metadata, rather than making separate copies of the metadata for each stream." SAMSUNG-1055, Abstract, ¶¶[0040]-[0047]. To manage the streaming of the track to multiple clients, Srikantan generates a

"file track handle" that "acts as an interface between its client stream … and the single instance of media metadata." SAMSUNG-1055, ¶¶[0008]-[0009], [0044]-[0046], [0051]-[0054], [0059], [0071], FIG. 2. Srikantan also discloses that the receiving client "may issue commands to control the stream—e.g., to rewind or fast forward to locate a particular part of the media, to pause the streaming, etc." SAMSUNG-1055, ¶¶[0024], [0029], [0060], [0073]; SAMSUNG-1003, ¶42.

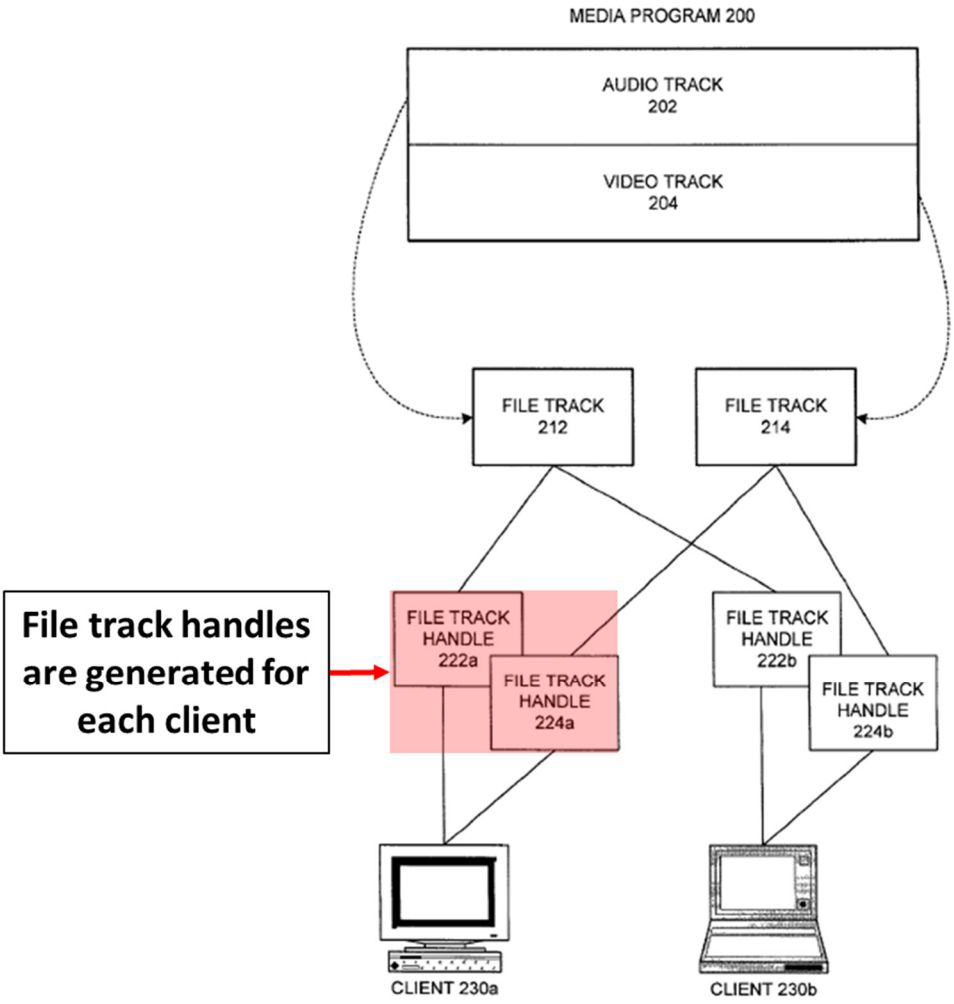

SAMSUNG-1055, FIG. 2.

2. The combination of Bennett, Vadde, Riggs, and Srikantan

It would have been obvious for a POSITA to incorporate Srikantan's techniques, to include a media streaming server that generates file track handles for media files streamed to the Bennett-Vadde-Riggs device. SAMSUNG-1041, ¶¶[0025], [0076], FIG. 3; SAMSUNG-1055, ¶¶[0008]-[0009], [0044]-[0046], [0051]-[0054], [0059], [0071], FIG. 2. As Dr. Traynor explains, a POSITA would have recognized and found obvious that generating multiple copies of metadata associated with a media file is resource intensive, and Srikantan's techniques would have reduced server-side computing requirements by reducing the need to generate multiple copies of metadata for a streamed media file. SAMSUNG-1055, ¶¶[0004], [0007]-[0009], [0019]-[0020], [0024]-[0026]; SAMSUNG-1003, ¶43. Also, as Srikantan notes, sharing a single file handle among multiple clients "can lead to a great deal of contention among the client streams as each one attempts to seek to (i.e., find) and extract a different media segment or sample"—streams that a POSITA knows cost precious bandwidth. SAMSUNG-1055, ¶¶[0005]-[0006]; SAMSUNG-1042, ¶[0034]; SAMSUNG-1046, 7:40-50, 14:61-67, Table-2 (describing "real-time audio and video" applications as "[h]igh bandwidth" applications); *see supra*, §III.A.3; SAMSUNG-1003, ¶43. To that end, a POSITA would have recognized the bandwidth savings that would be gained from eliminating conflicting streaming sessions using Srikantan's techniques. *Id*.

Incorporating Srikantan's media streaming server and file track handle generation techniques into the Bennett-Vadde-Riggs device would have been nothing more than the application of known techniques (e.g., generating a file track handle for a media file) to a known structure (e.g., media streamed by the Bennett-Vadde-Riggs device) to yield predictable results (e.g., the Bennett-Vadde-Riggs device referencing the Srikantan file track handle when streaming a media file). *KSR Int'l Co. v. Teleflex Inc*., 550 U.S. 398, 417 (2007). As Dr. Traynor explains, a POSITA would have expected success in implementing this combination because generating and using file handles to reference media streamed on the Bennett-Vadde-Riggs device using Srikantan's techniques simply applies Srikantan's teachings—with little modification—to a system that Srikantan itself envisions within its own disclosure (e.g., a device that streams media accessed from a server). SAMSUNG-1055, ¶¶[0023]-[0033]; SAMSUNG-1003, ¶44. Indeed, the modification would have (1) involved routine programming ability that would have been well within the skill of a POSITA, (2) introduced concepts that were already well known in the industry ("file handles," or "file descriptors"), and (3) required little to no modification to Srikantan's envisioned system. SAMSUNG-1055, Cover, ¶¶[0016]-[0018], [0083]; SAMSUNG-1003, ¶44. As Dr. Traynor explains, "file handles were, and still are, a well-known technique to ensure continuity of a file being shared in a server-client system, as evidenced by Srikantan pre-dating the Critical

Date by almost a decade." SAMSUNG-1003, ¶44; SAMSUNG-1055, Cover; SAMSUNG-1058, 3 (defining a file handle as "[a] temporary designation an operating system assigns to an opened file during any given session"); SAMSUNG-1059, 3 (defining a file descriptor as "[a] value used to identify an open file for the purpose of file access").

3. Analysis

[10.1]

As described above, Bennett's "CALL requests," sent by the application ("***from the application launching the data transfer request***") to the UA 202 include "a network address of a remote host from which media connections will be accepted" ("***a network resource identifier***"), and this information is forwarded to the MA 206 via an "OPEN request" ("***the media service manager to receive***"). SAMSUNG-1041, ¶¶[0034], [0050]-[0056], Table-3; *see supra* [1.4]. As discussed above, Riggs discloses that "the global address of content" ("***a network resource indicator that identifies the media object***") is "typically" provided "in the form of a Uniform Resource Locator (URL)" (e.g., a "feed URL"—"***the media object***"—provided by the requesting application). SAMSUNG-1043, 1:25-35, 5:54-62, 6:38-43; *see supra* §III.A.4.[3]; SAMSUNG-1003, ¶107.

[10.2]

Srikantan discloses that a "file track handle" ("***a media object handle descriptor***") is created when a client requests a media file (a "stream") stored on a server. SAMSUNG-1055, ¶¶[0008]-[0009], [0044]-[0046], [0051]-[0054], [0059], [0071], FIG. 2; SAMSUNG-1058, 3; SAMSUNG-1059, 3. In the Bennett-Vadde-Riggs-Srikantan combination, a POSITA would have recognized and found obvious that in response to the "OPEN request" of the UA 202, the MA 206 ("***the media service manager***") would have retrieved Srikantan's "file track handle" ("***a media object handle descriptor***") for the stream referenced in the network address of the OPEN request. SAMSUNG-1041, ¶¶[0034]-[0035], [0050]-[0056], [0086], Table-3; SAMSUNG-1003, ¶108. Once retrieved, the MA 206 would have returned the file track handle ("***a media object handle descriptor***") to the UA 202 via the "OPEN response," which would then return the file track handle to the application via the "CALL response" ("***return to the application a media object handle descriptor***"). *Id*.

As Dr. Traynor explains, "a POSITA would have leveraged the MA 206 to return the file handle of Srikantan to the application because this arrangement is consistent with the responsibilities of the MA 206, as disclosed in Bennett." SAMSUNG-1003, ¶109. For example, Bennett describes that the MA 206 "manages media connections" to include "Real-Time Transport Protocol

(RTP)" sessions. SAMSUNG-1041, ¶¶[0025], [0034], [0054]-[0055]. Specifically, the OPEN request sent to the MA 206 is an instruction "to initiate an RTP session," and in response, the MA 206 retrieves information from the host ("the network address of the host and port opened for the RTP connection"). SAMSUNG-1003, ¶[0054]. Similarly, Srikantan describes that its media servers use "RTP (Real-Time Transport Protocol) to deliver the stream to the client." SAMSUNG-1055, ¶¶[0027], [0046], [0072]. For at least this reason, as Dr. Traynor notes, a POSITA would have recognized that when establishing an RTP session with a host server, the MA 206 ("***the media service manager***") would have retrieved a file handle ("***media object handle descriptor***") for the requested stream, along with the "network address of the host and port," to share with the application streaming the file in the RTP session, such that the application could manipulate the stream in the session while informing the hosting server of the applied commands (e.g., "pause," "rewind," or "fast-forward"). SAMSUNG-1041, ¶¶[0077], [0080], [0086], Table-3; SAMSUNG-1055, ¶¶[0024], [0029], [0060], [0073]; SAMSUNG-1003, ¶109.

Further, this file handle would have been specifically "***return[ed] to the application***" because, as Bennett notes, "the user application 150 may want to receive the media stream" and, further, "the user application 150 can direct how media or messages are routed," to include specifying commands like "PAUSE"

or "RESUME." SAMSUNG-1041, ¶¶[0076]-[0077]; SAMSUNG-1003, ¶110.

[10.3]

Srikantan discloses a "media streaming server" ("***a proxy service***") that "is configured to stream QuickTime media and/or other forms of media, in a unicast or multicast mode, over a proprietary or publicly accessible network such as the Internet" ("***one or more network data transfers comprising the media object***"). SAMSUNG-1055, ¶¶[0027]-[0033], FIG. 1. Additionally, because Bennett's MA 206 "manages media connections" to include "Real-Time Transport Protocol (RTP)" sessions—the same RTP sessions Srikantan discloses its media streaming server maintains for streaming media—the MA 206 would "***call***" the media streaming server hosting the stream ("***a proxy service***") to "***perform one or more network data transfers comprising the media object***" using an RTP session. SAMSUNG-1041, ¶¶[0025], [0034], [0054]-[0055]; SAMSUNG-1055, ¶¶[0027], [0046], [0072]; *see supra* [10.2]; SAMSUNG-1003, ¶111.

Additionally, as Dr. Traynor explains, a POSITA would have recognized and found obvious that Srikantan's "media streaming server" is "***a proxy service***" (such that the Bennett-Vadde-Riggs-Srikantan device "***calls a proxy service to perform one or more network data transfers comprising the media object***"), at least because Srikantan discloses that the media streaming server can

"redirect to clients media that it receives from another entity, such as a live event, a video camera, a broadcast from another server (e.g., server 130)." SAMSUNG-1055, ¶¶[0025], [0032], [0039], FIG. 1; SAMSUNG-1003, ¶112. Srikantan discloses that in this mode, the media streaming server "acts as a client" when it receives content from another server to send to the requesting device, which as Dr. Traynor explains, is a mode of operation consistent with a "***proxy***" as of the Critical Date. SAMSUNG-1056, 3-4 (describing a "proxy" as "an intermediate application program that acts as both a client and a server"); SAMSUNG-1057, 3 (describing that a "proxy" is "a device or program empowered to act for another"); SAMSUNG-1003, ¶112.

[10.4]

Bennett discloses that the MA 206 receives "requests to control the media stream, such as a PAUSE request to pause an active media stream, and a RESUME request to resume a paused media stream" ("***accept … commands***"). SAMSUNG-1041, ¶[0076]; SAMSUNG-1055, ¶¶[0024], [0029], [0060], [0073] (describing other examples of commands). As Dr. Traynor explains, a POSITA would have recognized and found obvious that these commands are issued "***from the application***" because Bennett describes, in the same paragraph discussing the above commands, that "the user application 150 can direct how media or messages are routed." SAMSUNG-1041, ¶[0077]; SAMSUNG-1003,

¶113. Additionally, Dr. Traynor notes that "the application is the interface between the user and the stream and, given that streaming commands like 'pause' and 'stop' are typically in response to user action, these commands would have typically originated "***from the application***" as a result of the user interacting with the application." *See, e.g.*, SAMSUNG-1041, ¶¶[0024] (describing a "user application 150"), [0077]; SAMSUNG-1003, ¶113.

Additionally, the "PAUSE" and "RESUME" commands of Bennett are "***associated with the media object handle descriptor***" at least because these commands are applied to the stream described by the "***media object handle descriptor***." SAMSUNG-1041, ¶¶[0034]-[0035], [0050]-[0056], [0086], Table-3; SAMSUNG-1055, ¶¶[0008]-[0009], [0044]-[0046], [0051]-[0054], [0059], [0071], FIG. 2; *see supra* [10.2] (describing that a file track handle is created and shared for a stream once the stream is requested); SAMSUNG-1003, ¶114. Indeed, Srikantan discloses that, once a handle is created, each handle "includes methods to start, stop, pause and otherwise control a media stream (e.g., in response to client commands)" (such that these "methods" are "***associated with the media object handle descriptor***"). SAMSUNG-1055, ¶[0073], FIG. 5.

[10.5]

Bennett's PAUSE and RESUME commands control the media stream

played by the MA 206's media player, and thus the MA 206 "***control[s] playback of the media data by the media player based on the commands***." SAMSUNG-1041, ¶¶[0077], [0080], Table-3. Srikantan similarly describes that commands are applied to retrieved streams to manipulate the content. SAMSUNG-1055, ¶¶[0024], [0029], [0060], [0073]; SAMSUNG-1003, ¶115.

IV. PTAB DISCRETION SHOULD NOT PRECLUDE INSTITUTION

A. 35 U.S.C. §325(d) – *Advanced Bionics*

Advanced Bionics and the *Becton* factors strongly favor institution. *Advanced Bionics LLC v. MED-EL Elektromedizinische Gerate GmbH*, IPR2019-01469, Paper 6 (PTAB Feb. 13, 2020) ("*Advanced Bionics*") (precedential); *Becton, Dickinson and Co. v. B. Braun Melsungen AG*, IPR2017-01586, Paper 8 (PTAB Dec. 15 2017) ("*Becton*") (precedential).

There is no indication in the '918 Patent's file history that the Examiner substantively considered any of the prior art applied in this Petition prior to allowing the application that issued as the '918 Patent. SAMSUNG-1002, 381-390; *see supra*, §II.B. Because the '918 Patent's prosecution did not involve any discussion between the applicant and the Examiner regarding the teachings of the prior art applied in this Petition, the invalidity challenge based on the prior art asserted in this Petition is not the same as, or substantially similar to, art and arguments previously

presented to the Office in connection with the '918 Patent. *See, generally,* SAMSUNG-1002. Accordingly, neither condition of the first prong of the *Advanced Bionics* framework is met, and there is no need to reach the second prong to resolve against discretionary denial under Section 325(d). *See*, *e.g.*, *Oticon Medical AB et. al. v. Cochlear Ltd.*, IPR2019-00975, Paper 15 at 20 (PTAB Oct. 16, 2019). To the extent the Examiner considered references substantively similar to the references asserted in the Petition, the failure to issue a rejection of the Challenged Claims using those references constitutes material error.

Additionally, the Examiner also materially erred by accepting the applicant's claimed priority date (Jan. 28, 2009), failing to determine that the claims lacked adequate support in the alleged priority documents, and only considering prior art that pre-dated Jan. 28, 2009. SAMSUNG-1002, 381-390; *Lam Rsch. Corp. v. Inpria Corp.*, IPR2024-00033, Paper 13 (Apr. 24, 2024).

For at least the above-noted reasons, Petitioner respectfully submits that discretionary denial is unwarranted, and that the Board should instead institute IPR based on the instant Petition's grounds.

B. 35 U.S.C. §314(a) – *Fintiv*

Petitioner's arguments are compelling with substantial supporting evidence, which "alone demonstrates that the PTAB should not discretionarily deny institu-

tion under *Fintiv*." SAMSUNG-1060, 4-5. Moreover, the *Fintiv* factors do not favor denial.

Factor 1 is neutral; neither party has requested a stay in co-pending litigation.

Factor 2 is neutral; the Court's trial date is speculative and subject to change. The Board will likely issue its Final Written Decision around March 2026, approximately 5 months after the scheduled trial (10/6/2025). SAMSUNG-1064, 1. However, as the Board and Director have previously understood, "scheduled trial dates are unreliable and often change." SAMSUNG-1060, 8.

Factor 3 favors institution; Petitioner filed this Petition months ahead of the one-year time bar, while litigation is in its early stages. Beyond exchanging preliminary infringement/invalidity contentions, the parties and the District Court have yet to expend significant resources on invalidity.

Factor 4 favors institution because Petitioner has provided a stipulation that it will not pursue the IPR grounds in the EDTX Litigation. SAMSUNG-1061. Thus, "[i]nstituting trial here serves overall system efficiency and integrity goals by not duplicating efforts and by resolving materially different patentability issues." *Apple, Inc. v. SEVEN Networks, LLC*, IPR2020-00156, Paper 10, 19 (6/15/2020); *see Sand Revolution II, LLC v. Continental Intermodal Group-Trucking LLC*, IPR2019-01393, Paper 24, 12 (6/16/2020).

Factor 5: The parties in the parallel litigation are the same.

Factor 6 favors institution; the Petition's merits are compelling.

V. CONCLUSION AND FEES

The Challenged Claims are unpatentable. Petitioner authorizes charge of fees to Deposit Account 06-1050.

VI. MANDATORY NOTICES UNDER 37 C.F.R. § 42.8(a)(1)

A. Real Party-In-Interest Under 37 C.F.R. § 42.8(b)(1)

Samsung Electronics Co., Ltd. and Samsung Electronics America, Inc. (collectively, "Samsung") are the real parties-in-interest.

B. Related Matters Under 37 C.F.R. § 42.8(b)(2)

The '918 Patent is the subject of civil action Headwater Research LLC v. Samsung Electronics Co., Ltd. et al., 2-23-cv-00641 (EDTX), filed December 29, 2023 (SAMSUNG-1004). Petitioner is not aware of any other disclaimers, reexamination certificates, or IPR petitions addressing the '918 Patent.

C. Lead And Back-Up Counsel Under 37 C.F.R. § 42.8(b)(3)

Petitioner provides the following designation of counsel.

Lead Counsel	Backup counsel
W. Karl Renner, Reg. No. 41,265 Fish & Richardson P.C. 60 South Sixth Street, Suite 3200 Minneapolis, MN 55402 Tel: 202-783-5070 Fax: 877-769-7945 Email:IPR39843-0182IP1@fr.com	Jeremy J. Monaldo, Reg. No. 58,680 Jennifer J. Huang, Reg. No. 64,297 60 South Sixth Street, Suite 3200 Minneapolis, MN 55402 Tel: 202-783-5070 Fax: 877-769-7945 PTABInbound@fr.com

D. Service Information

Please address all correspondence and service to the address listed above. Petitioner consents to electronic service by email at IPR39843-0182IP1@fr.com (referencing No. 39843-0182IP1 and cc'ing PTABInbound@fr.com, axf-ptab@fr.com, jjm@fr.com and jjh@fr.com).

Respectfully submitted,

Dated September 9, 2024

/Jeremy J. Monaldo/

W. Karl Renner, Reg. No. 41,265
Jeremy J. Monaldo, Reg. No. 58,680
Jennifer J. Huang, Reg. No. 64,297
Fish & Richardson P.C.
60 South Sixth Street, Suite 3200
Minneapolis, MN 55402
T: 202-783-5070
F: 877-769-7945

(Control No. IPR2024-01396)

Attorneys for Petitioner

CERTIFICATION UNDER 37 CFR § 42.24

Under the provisions of 37 CFR § 42.24(d), the undersigned hereby certifies that the word count for the foregoing Petition for *Inter Partes* Review totals 12,601 words, which is less than the 14,000 allowed under 37 CFR § 42.24.

Dated September 9, 2024

/Jeremy J. Monaldo/

W. Karl Renner, Reg. No. 41,265
Jeremy J. Monaldo, Reg. No. 58,680
Jennifer J. Huang, Reg. No. 64,297
Fish & Richardson P.C.
60 South Sixth Street, Suite 3200
Minneapolis, MN 55402
T: 202-783-5070
F: 877-769-7945

Attorneys for Petitioner

CERTIFICATE OF SERVICE

Pursuant to 37 CFR §§ 42.6(e)(4)(i) *et seq.* and 42.105(b), the undersigned certifies that on September 9, 2024, a complete and entire copy of this Petition for *Inter Partes* Review and all supporting exhibits were provided by Federal Express, to the Patent Owner, by serving the correspondence address of record as follows:

Headwater Research LLC
C/O Farjami & Farjami LLP
26522 La Alameda Ave., Suite 360
Mission Viejo, CA 92691

/Diana Bradley/

Diana Bradley
Fish & Richardson P.C.
60 South Sixth Street, Suite 3200
Minneapolis, MN 55402
(858) 678-5667