US011365026B2

(12) **United States Patent**
Brunner et al.

(10) **Patent No.: US 11,365,026 B2**
(45) **Date of Patent: *Jun. 21, 2022**

(54) **UTILITY ASSEMBLY AND COUPLING MECHANISM**

(71) Applicants: **Milwaukee Electric Tool Corporation**, Brookfield, WI (US); **Keter Plastic LTD.**, Herzelyia (IL)

(72) Inventors: **Yaron Brunner**, Kibbutz Gvat (IL); **Grant T. Squiers**, Cudahy, WI (US); **Christopher S. Hoppe**, Cedarburg, WI (US); **Steven W. Hyma**, Milwaukee, WI (US)

(73) Assignees: **Milwaukee Electric Tool Corporation**, Brookfield, WI (US); **Keter Plastic LTD.**, Herzelyia (IL)

(*) Notice: Subject to any disclaimer, the term of this patent is extended or adjusted under 35 U.S.C. 154(b) by 0 days.

This patent is subject to a terminal disclaimer.

(21) Appl. No.: **17/536,521**

(22) Filed: **Nov. 29, 2021**

(65) **Prior Publication Data**

US 2022/0081162 A1 Mar. 17, 2022

Related U.S. Application Data

(63) Continuation of application No. 17/391,904, filed on Aug. 2, 2021, now Pat. No. 11,192,690, which is a (Continued)

(51) **Int. Cl.**
B65D 21/02 (2006.01)
B65D 21/028 (2006.01)
(Continued)

(52) **U.S. Cl.**
CPC ***B65D 21/0223*** (2013.01); ***A45C 5/14*** (2013.01); ***A45C 7/005*** (2013.01); ***A45C 13/02*** (2013.01);
(Continued)

(58) **Field of Classification Search**
CPC A45C 5/14; A45C 7/005; A45C 7/0045; A45C 13/02; A45F 3/10; B25H 1/04;
(Continued)

(56) **References Cited**

U.S. PATENT DOCUMENTS

495,537 A 4/1893 Westerman
509,839 A 11/1893 Bowley
(Continued)

FOREIGN PATENT DOCUMENTS

CN 2608238 3/2004
CN 200947356 9/2007
(Continued)

OTHER PUBLICATIONS

"Blitz Box—Portable Storage Box/ Shelf," The Green Head Finds Cool New Stuff, https://www.thegreenhead.com/2013/03/blitz-box-portable-storage-box-shelf.php, Per Wayback, website dates back to Feb. 15, 2015, 5 pages.
(Continued)

Primary Examiner — Gideon R Weinerth
(74) *Attorney, Agent, or Firm* — Reinhart Boerner Van Deuren s.c.

(57) **ABSTRACT**

The present disclosure concerns a coupling mechanism for detachably attaching two or more utility modules to one another, utility assembles, mobile carriers and other attachable modules and articles.

11 Claims, 48 Drawing Sheets

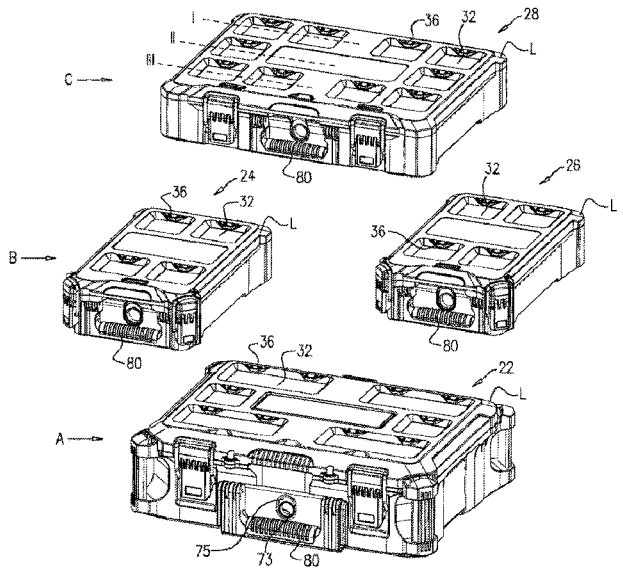

Related U.S. Application Data

continuation of application No. 17/132,609, filed on Dec. 23, 2020, which is a continuation of application No. 17/064,371, filed on Oct. 6, 2020, which is a continuation of application No. 16/752,441, filed on Jan. 24, 2020, now Pat. No. 11,008,136, which is a continuation of application No. 16/216,724, filed on Dec. 11, 2018, now Pat. No. 10,583,962, which is a continuation of application No. 15/826,232, filed on Nov. 29, 2017, now Pat. No. 10,070,534, which is a continuation of application No. PCT/IL2017/050481, filed on Apr. 30, 2017.

(60) Provisional application No. 62/459,076, filed on Feb. 15, 2017, provisional application No. 62/330,334, filed on May 2, 2016.

(51) **Int. Cl.**

B62B 1/14	(2006.01)
A45C 5/14	(2006.01)
A45C 7/00	(2006.01)
B25H 1/04	(2006.01)
A45C 13/02	(2006.01)
B25H 3/02	(2006.01)
B62B 5/06	(2006.01)
A45F 3/10	(2006.01)

(52) **U.S. Cl.**

CPC ***A45F 3/10*** (2013.01); ***B25H 1/04*** (2013.01); ***B25H 3/02*** (2013.01); ***B25H 3/021*** (2013.01); ***B62B 1/14*** (2013.01); ***B65D 21/0209*** (2013.01); ***B65D 21/0228*** (2013.01); *A45C 7/0045* (2013.01); *B25H 3/023* (2013.01); *B62B 5/067* (2013.01); *B65D 2255/00* (2013.01); *B65H 2701/533* (2013.01)

(58) **Field of Classification Search**

CPC B25H 3/02; B25H 3/021; B25H 3/023; B62B 1/14; B62B 5/067; B65D 21/0228; B65D 21/0223; B65D 21/0209; B65D 2255/00; B65H 2701/533

USPC 220/4.27

See application file for complete search history.

(56) **References Cited**

U.S. PATENT DOCUMENTS

1,081,378	A	12/1913	Freeman
1,084,360	A	1/1914	Rahm
2,042,387	A	5/1936	Cobb
2,124,541	A	7/1938	Cassey
2,386,343	A	10/1945	Regenhardt
2,430,200	A	11/1947	Wilson
2,939,613	A	6/1960	Herman et al.
2,970,358	A	2/1961	Elsner
3,117,692	A	1/1964	Carpenter et al.
3,225,865	A	12/1965	Downey
3,423,786	A	1/1969	Arias, Jr. et al.
3,424,334	A	1/1969	Goltz
3,506,321	A	4/1970	Hampel
3,514,170	A	5/1970	Shewchuk
3,552,817	A	1/1971	Marcolongo
3,567,298	A	3/1971	Ambaum et al.
3,743,372	A	7/1973	Ruggerone
D232,798	S	9/1974	Roche et al.
3,851,936	A	12/1974	Muller
3,935,613	A	2/1976	Kaneko
3,974,898	A	8/1976	Tullis et al.
3,999,818	A	12/1976	Schankler
4,122,925	A	10/1978	Schultheiss
4,168,076	A	9/1979	Johnson
4,243,279	A	1/1981	Ackeret
4,564,732	A	1/1986	Lancaster et al.
D285,986	S	10/1986	Huang
4,660,725	A	4/1987	Fishman et al.
4,673,070	A	6/1987	Ambal
4,805,859	A	2/1989	Hudson
4,817,237	A	4/1989	Murphy
4,929,973	A	5/1990	Nakatani
4,971,201	A	11/1990	Sathre
5,035,389	A	7/1991	Wang
5,035,445	A	7/1991	Poulin
D319,016	S	8/1991	Kahl
5,098,235	A	3/1992	Svetlik et al.
D325,324	S	4/1992	Kahl
5,105,947	A	4/1992	Wise
D326,815	S	6/1992	Meisner et al.
5,154,291	A	10/1992	Sur
5,240,264	A	8/1993	Williams
D340,167	S	10/1993	Kahl
5,282,554	A	2/1994	Thomas
5,301,829	A	4/1994	Chrisco
5,325,966	A	7/1994	Chang
5,356,038	A	10/1994	Banks
5,356,105	A	10/1994	Andrews
D352,208	S	11/1994	Brookshire
5,375,709	A	12/1994	Petro
5,429,235	A	7/1995	Chen
5,429,260	A	7/1995	Vallers
5,433,416	A	7/1995	Johnson
D361,511	S	8/1995	Dickinson et al.
5,454,634	A	10/1995	Herbst et al.
5,538,213	A	7/1996	Brown
5,595,228	A	1/1997	Meisner et al.
5,608,603	A	3/1997	Su
5,622,296	A	4/1997	Pirhonen et al.
5,628,443	A	5/1997	Deutsch
5,653,366	A	8/1997	Liserre
5,664,292	A	9/1997	Chen
D395,533	S	6/1998	Morison et al.
5,775,046	A	7/1998	Fanger
5,797,617	A	8/1998	Lin
5,850,996	A	12/1998	Liang
5,890,613	A	4/1999	Williams
5,951,037	A	9/1999	Hsieh
5,957,421	A	9/1999	Barbour
D415,393	S	10/1999	Kei
5,988,473	A	11/1999	Hagan et al.
D420,860	S	2/2000	Golichowski et al.
6,050,660	A	4/2000	Gurley
6,082,539	A	7/2000	Lee
6,082,687	A	7/2000	Kump et al.
6,085,925	A	7/2000	Chung
6,098,858	A	8/2000	Laugesen
6,109,627	A	8/2000	Be
6,176,559	B1	1/2001	Tiramani et al.
D437,484	S *	2/2001	Tiramani D3/276
D437,669	S	2/2001	Blason et al.
6,305,498	B1	10/2001	Itzkovitch
6,347,847	B1	2/2002	Tiramani et al.
6,367,631	B1	4/2002	Steigerwald
6,371,320	B2	4/2002	Sagal
6,371,321	B1	4/2002	Lee
6,371,424	B1	4/2002	Shaw
D456,972	S	5/2002	Blason et al.
6,431,580	B1	8/2002	Kady
6,547,347	B2	4/2003	Saito
6,601,930	B2	8/2003	Tiramani et al.
6,619,772	B2	9/2003	Dierbeck
6,637,707	B1	10/2003	Gates
6,641,013	B2	11/2003	Oise
6,889,838	B2	5/2005	Meier et al.
6,945,546	B2	9/2005	Guirlinger
6,948,691	B2	9/2005	Brock et al.
6,983,946	B2	1/2006	Sullivan et al.
7,044,484	B2	5/2006	Wang
7,066,475	B2	6/2006	Barnes
7,077,372	B2	7/2006	Moran
D525,789	S	8/2006	Hosking
D527,225	S	8/2006	Krieger et al.

(56) **References Cited**

U.S. PATENT DOCUMENTS

7,090,085 B1 8/2006 Vicendese et al.
7,147,243 B2 12/2006 Kady
7,152,752 B2 12/2006 Kurtenbach
D536,580 S 2/2007 Krieger et al.
7,172,164 B2 2/2007 Fuelling
7,219,969 B2 5/2007 Bezzubov
7,263,742 B2 9/2007 Valentini
7,350,648 B2 4/2008 Gerstner et al.
7,367,571 B1 5/2008 Nichols
7,503,569 B2 3/2009 Duvigneau
7,658,887 B2 2/2010 Hovatter
7,690,856 B2 4/2010 Mortensen
7,779,764 B2 8/2010 Naidu et al.
7,780,026 B1 8/2010 Zuckerman
7,837,165 B2 11/2010 Stone
7,841,144 B2 11/2010 Pervan
D630,851 S 1/2011 Landau et al.
8,028,845 B2 10/2011 Himes
D649,350 S 11/2011 Shitrit
D649,783 S * 12/2011 Brunner H02J 7/35 D3/279
D653,832 S 2/2012 Vilkomirski et al.
8,132,819 B2 3/2012 Landau
8,177,463 B2 5/2012 Walker
D661,858 S 6/2012 Lifshitz et al.
8,191,910 B2 6/2012 Landau et al.
D663,952 S 7/2012 Crevling et al.
D664,354 S 7/2012 Crevling et al.
D668,869 S 10/2012 Yamamoto et al.
D674,605 S 1/2013 Vilkomirski et al.
8,448,829 B2 5/2013 Watanabe
8,454,033 B2 6/2013 Tsai
8,459,495 B2 6/2013 Koenig
8,505,729 B2 8/2013 Sosnovsky et al.
8,567,796 B2 10/2013 Bar-Erez et al.
8,602,217 B2 12/2013 Sosnovsky et al.
8,640,913 B2 2/2014 Berendes
8,677,661 B2 3/2014 Michels
D701,696 S 4/2014 Shitrit et al.
8,689,396 B2 4/2014 Wolfe
8,714,355 B2 5/2014 Huang
8,813,960 B2 8/2014 Fjelland
8,851,282 B2 10/2014 Brunner
8,875,888 B2 11/2014 Koenig
8,894,160 B1 11/2014 Christensen
8,925,752 B2 1/2015 Smith
8,979,100 B2 3/2015 Bensman et al.
8,985,922 B2 3/2015 Neumann
D738,105 S 9/2015 Shitrit
D738,106 S 9/2015 Shitrit
D738,622 S 9/2015 Sabbag et al.
9,132,543 B2 9/2015 Bar-Erez
D753,394 S 4/2016 Brunner
D753,395 S 4/2016 Brunner
D753,396 S 4/2016 Brunner
D753,982 S 4/2016 Guirlinger
D765,974 S 9/2016 Tonelli et al.
D770,179 S 11/2016 Menirom
9,506,489 B2 11/2016 Ko
9,511,491 B2 12/2016 Brunner
D777,426 S 1/2017 Dahl
9,551,367 B1 1/2017 Shieh
9,566,990 B2 2/2017 Bar-Erez
D784,089 S 4/2017 Furneaux et al.
9,616,562 B2 4/2017 Hoppe
9,643,629 B2 5/2017 Bar-Erez et al.
D790,221 S 6/2017 Yahav et al.
9,701,443 B2 7/2017 Wang
9,725,209 B1 8/2017 Ben-Gigi
D803,631 S 11/2017 Min et al.
9,850,029 B2 12/2017 Brunner
D806,483 S 1/2018 Stanford et al.
9,872,562 B2 1/2018 Brunner
9,888,752 B2 2/2018 Den Boer et al.
D814,187 S 4/2018 Caglar
D815,831 S 4/2018 Tonelli
D816,334 S 5/2018 Brunner
D826,510 S 8/2018 Brunner
RE47,022 E * 9/2018 Sosnovsky B25H 3/02
D828,671 S 9/2018 Cope et al.
D831,352 S 10/2018 Brunner
10,106,180 B2 10/2018 Bar-Erez et al.
D833,744 S 11/2018 Yahav et al.
D836,995 S 1/2019 Carey et al.
D839,681 S 2/2019 Evron et al.
10,222,172 B2 3/2019 Melville
D837,515 S 4/2019 Shpitzer
D845,080 S 4/2019 Jacobsen
D845,081 S 4/2019 Jacobsen
D857,387 S 8/2019 Shpitzer
10,434,638 B1 10/2019 Tsai
D871,013 S 12/2019 Liu
D873,085 S 1/2020 DeFrancia
D876,833 S * 3/2020 Brunner D3/905
10,583,962 B2 3/2020 Brunner et al.
10,603,783 B2 3/2020 Brocket et al.
D880,252 S 4/2020 Jacobsen
D880,951 S 4/2020 Jacobsen
D883,752 S 5/2020 Carey et al.
D887,788 S 6/2020 Meda et al.
D888,422 S 6/2020 Yang
D888,503 S 6/2020 Meda et al.
D891,193 S 6/2020 Stanford et al.
D891,195 S 7/2020 Zhou
10,703,534 B2 7/2020 Brunner et al.
D891,875 S 8/2020 Olson
D892,565 S 8/2020 Astle et al.
10,750,833 B2 8/2020 Burchia
D895,375 S 9/2020 Hurley, Jr.
D895,966 S 9/2020 Brunner et al.
D895,967 S 9/2020 Brunner et al.
D896,517 S 9/2020 Brunner et al.
D896,518 S 9/2020 Brunner et al.
D897,103 S * 9/2020 Brunner D3/294
10,758,065 B2 9/2020 Penalver, Jr.
D898,320 S 10/2020 Brunner et al.
10,793,172 B2 10/2020 Brunner
10,829,269 B2 11/2020 Gonitianer et al.
10,933,501 B2 3/2021 Bisson
10,962,218 B2 3/2021 Plato et al.
10,981,696 B2 4/2021 Brunner et al.
D917,977 S 5/2021 Brunner et al.
D918,584 S * 5/2021 Brunner D3/294
D919,296 S * 5/2021 Brunner D3/307
11,008,136 B2 5/2021 Brunner et al.
D920,671 S * 6/2021 Brunner D3/294
D923,935 S 7/2021 Brunner et al.
11,059,631 B1 * 7/2021 Brunner B25H 3/02
11,066,089 B2 * 7/2021 Brunner B62B 5/049
D932,186 S * 10/2021 Brunner D3/294
11,155,382 B1 * 10/2021 Cai F16B 5/0084
D936,030 S * 11/2021 Lee D14/188
D941,020 S * 1/2022 Brunner D3/294
11,230,410 B2 * 1/2022 Brunner B65D 21/0228
11,283,117 B2 * 3/2022 Polakowski H01M 10/6572
2002/0000440 A1 1/2002 Sagal et al.
2002/0030425 A1 * 3/2002 Tiramani B25H 3/023 280/47.35
2002/0125072 A1 9/2002 Levy
2002/0171228 A1 11/2002 Kady
2003/0075468 A1 * 4/2003 Story B25H 3/02 206/373
2003/0094392 A1 5/2003 Meier et al.
2003/0094393 A1 5/2003 Sahm, III
2003/0115715 A1 6/2003 Valentini
2003/0146589 A1 8/2003 Jarko et al.
2003/0184034 A1 10/2003 Pfeiffer
2003/0205877 A1 11/2003 Verna et al.
2004/0103494 A1 6/2004 Valentini
2004/0149754 A1 8/2004 Diamant
2004/0195793 A1 10/2004 Sullivan et al.
2004/0206656 A1 10/2004 Dubois et al.
2005/0015928 A1 1/2005 Arsenault et al.
2005/0062244 A1 3/2005 Guirlinger

(56) **References Cited**

U.S. PATENT DOCUMENTS

2005/0104308 A1 5/2005 Barnes
2005/0139745 A1 6/2005 Liao
2005/0242144 A1 11/2005 Panosian
2006/0006770 A1 1/2006 Valentini
2006/0027475 A1 2/2006 Gleason et al.
2006/0038367 A9 2/2006 Ferraro
2006/0076261 A1 4/2006 Kurtenbach
2006/0119060 A1 6/2006 Sullivan et al.
2006/0165482 A1 7/2006 Olberding
2006/0186624 A1 8/2006 Kady
2006/0254946 A1 11/2006 Becklin
2007/0006542 A1 1/2007 Duke
2007/0068757 A1 3/2007 Tan
2007/0090616 A1 4/2007 Tompkins
2007/0145700 A1 6/2007 Ambrose et al.
2007/0194543 A1 8/2007 Duvigneau
2007/0273114 A1* 11/2007 Katz B62B 1/12 280/47.26
2008/0060953 A1 3/2008 Ghassan
2008/0104921 A1 5/2008 Pervan
2008/0115312 A1 5/2008 DiPasquale et al.
2008/0121547 A1 5/2008 Dur et al.
2008/0134607 A1 6/2008 Pervan
2008/0169739 A1 7/2008 Goldenberg
2008/0271280 A1 11/2008 Frank et al.
2008/0277221 A1 11/2008 Josefson
2008/0280523 A1 11/2008 Bishop
2008/0296443 A1 12/2008 Lunitz
2008/0308369 A1 12/2008 Louis
2009/0026901 A1 1/2009 Nies, III et al.
2009/0071990 A1 3/2009 Jardine et al.
2009/0127146 A1 5/2009 Krebs
2009/0145790 A1 6/2009 Panosian
2009/0145866 A1 6/2009 Panosian et al.
2009/0145913 A1 6/2009 Panosian et al.
2009/0178946 A1 7/2009 Patstone et al.
2009/0236482 A1 9/2009 Winig et al.
2009/0288970 A1* 11/2009 Katz B25H 3/00 220/252
2010/0052276 A1 3/2010 Brunner
2010/0139566 A1 6/2010 Lopuszanski
2010/0147642 A1 6/2010 Andochick
2010/0176261 A1 7/2010 Chen et al.
2010/0219193 A1 9/2010 Becklin
2010/0224528 A1 9/2010 Madsen
2011/0073516 A1 3/2011 Zelinskiy
2011/0139665 A1 6/2011 Madsen
2011/0139777 A1 6/2011 Sosnovsky et al.
2011/0155613 A1 6/2011 Koenig et al.
2011/0174939 A1 7/2011 Taylor
2011/0181008 A1 7/2011 Bensman
2011/0220531 A1 9/2011 Meether et al.
2012/0073995 A1* 3/2012 Parker A45C 13/10 206/1.5
2012/0074022 A1 3/2012 McTavish et al.
2012/0074158 A1 3/2012 Lafleur
2012/0152944 A1 6/2012 Vilkomirski et al.
2012/0160886 A1 6/2012 Henny et al.
2012/0180250 A1 7/2012 Ricklefsen et al.
2012/0207571 A1 8/2012 Scott
2012/0292213 A1 11/2012 Brunner
2012/0326406 A1 12/2012 Lifshitz
2013/0024468 A1 1/2013 Kocsis
2013/0031731 A1 2/2013 Hess
2013/0031732 A1 2/2013 Hess et al.
2013/0068903 A1 3/2013 O'Keene
2013/0121783 A1 5/2013 Kelly
2013/0127129 A1 5/2013 Bensman et al.
2013/0146551 A1 6/2013 Simpson et al.
2013/0154218 A1 6/2013 Tiilikainen
2013/0223971 A1 8/2013 Grace, IV
2014/0062042 A1* 3/2014 Wagner ..... A45C 5/14 190/18 R
2014/0069832 A1 3/2014 Roehm
2014/0076759 A1 3/2014 Roehm et al.
2014/0123478 A1 5/2014 Gylander et al.
2014/0161518 A1 6/2014 Ko
2014/0166516 A1 6/2014 Martinez
2014/0197059 A1* 7/2014 Evans B25H 3/02 206/349
2015/0014949 A1 1/2015 Dittman
2015/0034515 A1 2/2015 Monyak et al.
2015/0151427 A1 6/2015 Ben-Gigi
2015/0274362 A1 10/2015 Christopher et al.
2015/0310842 A1 10/2015 Coburn et al.
2015/0376917 A1 12/2015 Brunner
2016/0023349 A1 1/2016 Hoppe et al.
2016/0130034 A1 5/2016 Kuhls
2016/0144500 A1 5/2016 Chen
2016/0168880 A1 6/2016 Phelan
2016/0213115 A1* 7/2016 Gonitianer A45C 13/10
2016/0221177 A1 8/2016 Reinhart
2017/0121056 A1 5/2017 Wang
2017/0138382 A1 5/2017 Ko
2017/0158216 A1* 6/2017 Yahav B62B 5/0013
2017/0165828 A1 6/2017 Fleischmann
2017/0166352 A1 6/2017 Hoppe
2017/0174392 A1 6/2017 De Loynes
2017/0217464 A1 8/2017 Bar-erez et al.
2017/0239808 A1 8/2017 Hoppe
2017/0257958 A1 9/2017 Sabbag et al.
2017/0266804 A1 9/2017 Kinskey
2017/0318927 A1 11/2017 Kraus et al.
2017/0349013 A1 12/2017 Gronholm
2018/0044059 A1 2/2018 Brunner
2018/0099405 A1 4/2018 Reinhart
2018/0127007 A1 5/2018 Kravchenko
2018/0153312 A1 6/2018 Buck et al.
2018/0161975 A1 6/2018 Brunner
2018/0186513 A1 7/2018 Brunner
2018/0213934 A1 8/2018 Wolle et al.
2018/0220758 A1 8/2018 Burchia
2018/0229889 A1 8/2018 Li
2018/0290288 A1 10/2018 Brunner
2019/0001482 A1 1/2019 Wolle et al.
2019/0002004 A1 1/2019 Brunner
2019/0031222 A1 1/2019 Takvar et al.
2019/0039781 A1 2/2019 Kogel
2019/0106244 A1 4/2019 Brunner et al.
2019/0168376 A1 6/2019 Brocket
2019/0225371 A1 7/2019 Hoppe et al.
2020/0029543 A1 1/2020 Householder
2020/0055534 A1 2/2020 Hassell
2020/0078929 A1* 3/2020 Liu B65D 21/0223
2020/0147781 A1* 5/2020 Squiers A45C 7/005
2020/0165036 A1* 5/2020 Squiers A45F 3/14
2020/0243925 A1 7/2020 Polakowski et al.
2020/0299027 A1 9/2020 Brunner et al.
2020/0346819 A1 11/2020 Kogel et al.
2021/0025706 A1 1/2021 Millane
2021/0031975 A1 2/2021 Brunner et al.
2021/0039831 A1 2/2021 Brunner et al.
2021/0094600 A1 4/2021 Brunner et al.
2021/0104909 A1* 4/2021 Mantych H02J 7/35
2021/0155373 A1 5/2021 Cai
2021/0187725 A1 6/2021 Brunner
2021/0221561 A1* 7/2021 Davidian B65D 43/163
2021/0267368 A1 9/2021 Bruins
2021/0316909 A1* 10/2021 Vargo B65D 1/40

FOREIGN PATENT DOCUMENTS

CN 101068661 11/2007
CN 102137795 7/2011
CN 102248523 11/2011
CN 102469899 5/2012
CN 102608238 7/2012
CN 102834035 12/2012
CN 302371147 3/2013
CN 103118578 5/2013
CN 103659777 3/2014
CN 204161752 2/2015
DE 3510307 9/1986
DE 9313802 12/1993

(56) **References Cited**

FOREIGN PATENT DOCUMENTS

DE	4415638		11/1995
DE	29708343		7/1997
DE	19750543		5/1999
DE	20218996		3/2003
DE	102004057870		6/2006
DE	202011002617		4/2011
DE	102010003754		10/2011
DE	102010003756		10/2011
DE	102012106482		1/2014
DE	102012220837		5/2014
DE	202014103695		10/2014
DE	202015105053		10/2016
DE	202015005752		11/2016
DE	102015112204		2/2017
DE	102015013053		4/2017
DE	402018201520		5/2018
EM	000705231-0001		4/2007
EM	002419283-0001		3/2014
EP	0916302		5/1999
EP	1321247		6/2003
EP	1428764		6/2004
EP	1819487		8/2007
EP	2289671		3/2011
EP	2346741		7/2011
EP	2456341		5/2012
EP	2555660		2/2013
EP	2555661		2/2013
EP	2805799		11/2016
EP	3141354		3/2017
GB	694707		7/1953
GB	2047181	B	2/1983
GB	2110076		6/1983
GB	2330521		4/1999
GB	2406331		3/2005
GB	2413265		10/2005
GB	2449934		12/2008
JP	2003194020	A	7/2003
JP	D1180963		8/2003
JP	1276744		7/2006
JP	D1395115		8/2010
JP	D1395116		8/2010
JP	D1455321		11/2012
JP	2013022972		2/2013
JP	2013022976		2/2013
JP	1477050		8/2013
JP	D1503434		7/2014
JP	D1625407		2/2019
JP	D1665028		8/2020
KR	30-0271616		2/2000
KR	30-0320243		6/2002
KR	3008066040000		7/2015
KR	3008422360000		3/2016
KR	3008496000000		4/2016
KR	3008599650000		6/2016
KR	3008812960000		11/2016
KR	3009995990000		3/2019
TW	206875		5/1993
TW	I324578		5/2010
TW	135074		6/2010
TW	168686		7/2015
TW	174412		3/2016
TW	D192092		8/2018
WO	WO2005/045886		5/2005
WO	WO2007/121746		11/2007
WO	WO07121745		11/2007
WO	WO07121746		11/2007
WO	WO2007121745		11/2007
WO	WO2009/140965		11/2009
WO	WO09140965		11/2009
WO	WO2011/009480		1/2011
WO	WO11009480		1/2011
WO	WO2013/026084		2/2013
WO	WO13026084		2/2013
WO	WO2014/125488		8/2014
WO	WO14125488		8/2014
WO	WO2016142935		9/2016
WO	WO2017028845		2/2017
WO	WO2017191628		11/2017
WO	WO2017/212840		12/2017
WO	WO17212840		12/2017

OTHER PUBLICATIONS

"BluCave Universal Storage System," BATAVIA Tools to Build, https://batavia.eu/blucave-storagesystem/, believed to be available at least as early as Nov. 29, 2017, 5 pages.

"Dewait TSTAK Carrier Trolley," ITS, https://www.its.eo.uk/pd/171229-Dewalt-TSTAK-Carrier-Trolley-_DEW171229.htm, Per Wayback, website dates back to May 2, 2015, 2 pages.

"DeWalt TSTAK Vac Rack (Suits DWDW/9O2M & DWV9OOL) DWV95OO-XJ," Get Tools Direct, https://www.gettoolsdirect.eom.au/dewalt-tstak-vac-rack-suits-dwv902m-and-dwv9OO1-dwv95OO-xj.html, believed to be available at least as early as Nov. 29, 2017, 4 pages.

"Hopkins FloTool 91002 Rhino Box with Mount," Amazon.com, https://www.amazon.com/exec/obidos/ASIN/BOO3K15F31/2O14OOOO-2O, believed to be available at least as early as Nov. 29, 2017, 7 pages.

"Tool Skoal, TSTAK Phase 2 Upgrades I Tstak Carts—First Look—Tool Skoal," YouTube, Sep. 7, 2013, https://www.youtube.com/watch?v=jb06y6J1dr4&feature=youtu.be&t=197, 1 page.

Batavia Gmbh, BluCave Storage System, https //protect-us.mimecast.com/s/5XIGCR6KypcgJnlKi9EDoim?domain=batavia.eu, believed to be available at least as early as Nov. 29, 2017, 7 pages.

BluCave Video, https://www.youtube.com/watch ?v=Sw7fQQPwo0tY&feature=youtu.be&t=32, believed to be available at least as early as Nov. 29, 2017.

Exhibit 1001 in Petition for Inter Partes Review of U.S. Pat. No. 10,583,962, filed Jan. 5, 2021, 64 pages.

Exhibit 1002 in Petition for Inter Partes Review of U.S. Pat. No. 10,583,962, filed Jan. 5, 2021, 75 pages.

Exhibit 1003 in Petition for Inter Partes Review of U.S. Pat. No. 10,583,962, filed Jan. 5, 2021, 13 pages.

Exhibit 1004 in Petition for Inter Partes Review of U.S. Pat. No. 10,583,962, filed Jan. 5, 2021, 18 pages.

Exhibit 1005 in Petition for Inter Partes Review of U.S. Pat. No. 10,583,962, filed Jan. 5, 2021, 9 pages.

Exhibit 1006 in Petition for Inter Partes Review of U.S. Pat. No. 10,583,962, filed Jan. 5, 2021, 176 pages.

Exhibit 1007 in Petition for Inter Partes Review of U.S. Pat. No. 10,583,962, filed Jan. 5, 2021, 22 pages.

Exhibit 1008 in Petition for Inter Partes Review of U.S. Pat. No. 10,583,962, filed Jan. 5, 2021, 6 pages.

Exhibit 1009 in Petition for Inter Partes Review of U.S. Pat. No. 10,583,962, filed Jan. 5, 2021, 24 pages.

Exhibit 1010 in Petition for Inter Partes Review of U.S. Pat. No. 10,583,962, filed Jan. 5, 2021, 19 pages.

Exhibit 1011 in Petition for Inter Partes Review of U.S. Pat. No. 10,583,962, filed Jan. 5, 2021, 26 pages.

Exhibit 1012 in Petition for Inter Partes Review of U.S. Pat. No. 10,583,962, filed Jan. 5, 2021, 3 pages.

Exhibit 1013 in Petition for Inter Partes Review of U.S. Pat. No. 10,583,962, filed Jan. 5, 2021, 168 pages.

Exhibit 1014 in Petition for Inter Partes Review of U.S. Pat. No. 10,583,962, filed Jan. 5, 2021, Part A pp. 1-166 of 481 pages.

Exhibit 1014 in Petition for Inter Partes Review of U.S. Pat. No. 10,583,962, filed Jan. 5, 2021, Part B pp. 167-320 of 481 pages.

Exhibit 1014 in Petition for Inter Partes Review of U.S. Pat. No. 10,583,962, filed Jan. 5, 2021, Part C pp. 321-481 of 481 pages.

Exhibit 1015 in Petition for Inter Partes Review of U.S. Pat. No. 10,583,962, filed Jan. 5, 2021, 6 pages.

Exhibit 1016 in Petition for Inter Partes Review of U.S. Pat. No. 10,583,962, filed Jan. 5, 2021, 242 pages.

Exhibit 1017 in Petition for Inter Partes Review of U.S. Pat. No. 10,583,962, filed Jan. 5, 2021, 6 pages.

Exhibit 1018 in Petition for Inter Partes Review of U.S. Pat. No. 10,583,962, filed Jan. 5, 2021, 250 pages.

(56) **References Cited**

OTHER PUBLICATIONS

Exhibit 1019 in Petition for Inter Partes Review of U.S. Pat. No. 10,583,962, filed Jan. 5, 2021, 44 pages.
Exhibit 1020 in Petition for Inter Partes Review of U.S. Pat. No. 10,583,962, filed Jan. 5, 2021, 5 pages.
Exhibit 1021 in Petition for Inter Partes Review of U.S. Pat. No. 10,583,962, filed Jan. 5, 2021, 1 page.
Exhibit 1022 in Petition for Inter Partes Review of U.S. Pat. No. 10,583,962, filed Jan. 5, 2021, 1 page.
Exhibit 1023 in Petition for Inter Partes Review of U.S. Pat. No. 10,583,962, filed Jan. 5, 2021, 24 pages.
Exhibit 1024 in Petition for Inter Partes Review of U.S. Pat. No. 10,583,962, filed Jan. 5, 2021, 28 pages.
Inter Partes Review No. 2021-00373, "Petition for Inter Partes Review of U.S. Pat. No. 10,583,962," filed Jan. 5, 2021, 198 pages.
International Search Report and Written Opinion for International Application No. PCT/IL2019/050689, dated Aug. 23, 2019, 21 pages.
International Search Report and Written Opinion for International Application No. PCT/IL2020/050433, dated Jun. 21, 2020, 14 pages.
International Search Report and Written Opinion for International Application No. PCT/US2018/033161, dated Aug. 6, 2018, 14 pages.
International Search Report and Written Opinion for International Application No. PCT/US2018/044629, dated Jan. 9, 2019, 22 pages.
International Search Report and Written Opinion for International Application No. PCT/US2019/014940, dated Jul. 26, 2019, 7 pages.
Non-Final Rejection dated Apr. 12, 2018, in United States U.S. Appl. No. 15/826,201. (16 Pages).
Sortimo Logistix, "Mobile Sortimente", brochure, believed to be available at least as early as Nov. 29, 2017, 17 pages.
Stuart, "Ryobi ToolBlox Tool Cabinet System!," TOOLGUYD, Sep. 18, 2014, https://toolguyd.com/ryobi-toolblox-cabinets/, 23 pages.
Stuart, "Sys-Cart Base, a Systainer Mounting Platform," TOOLGUYD, Jul. 28, 2014, https://toolguyd.com/systainer-sys-cart-mounting-base/, 11 pages.
Vertak, https://www.alibaba.com/product-detail/Vertak-global-patented-multi-funciton-portable_60217794260.html, believed to be available at least as early as Nov. 29, 2017.

* cited by examiner

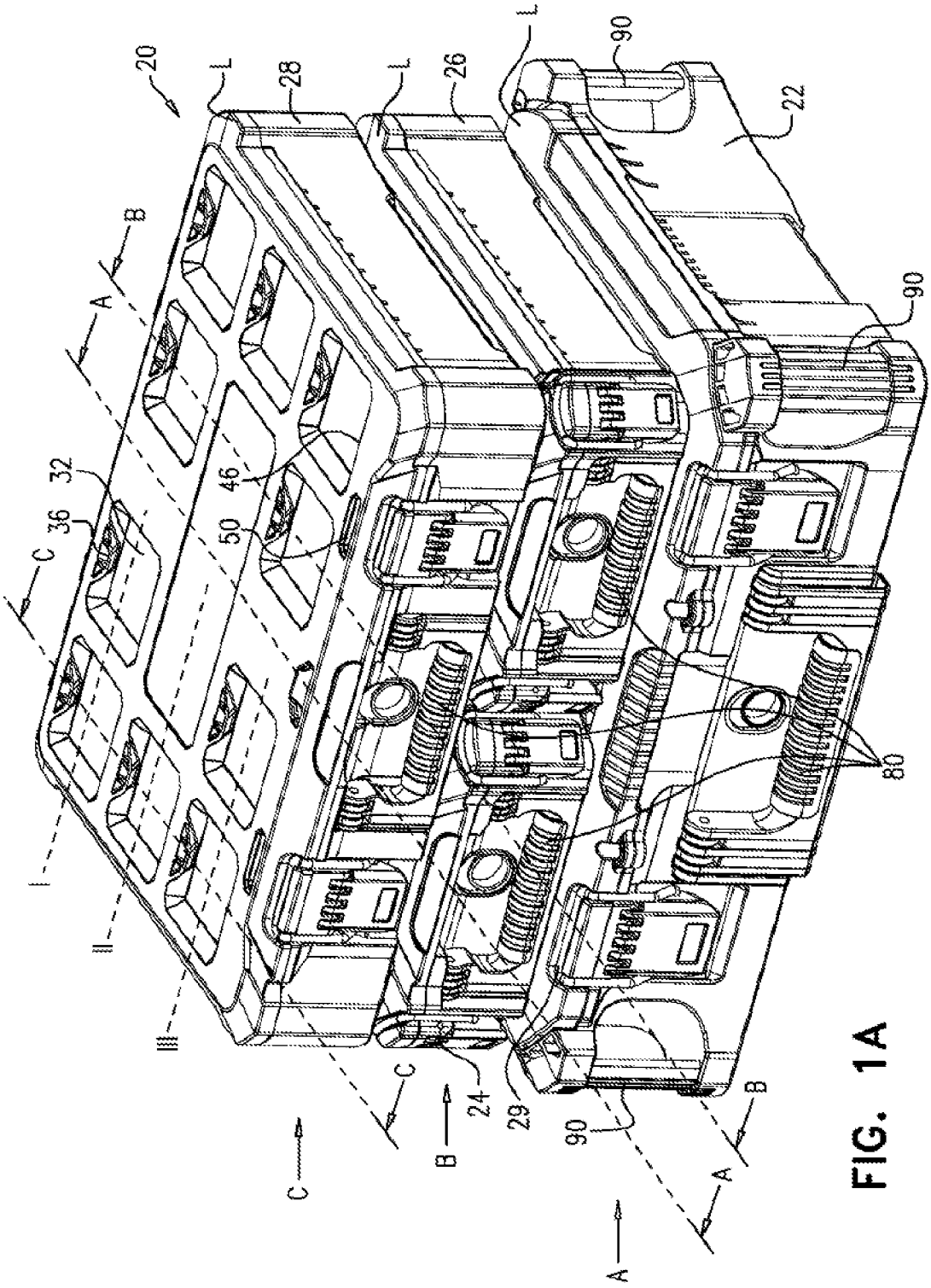

FIG. 1A

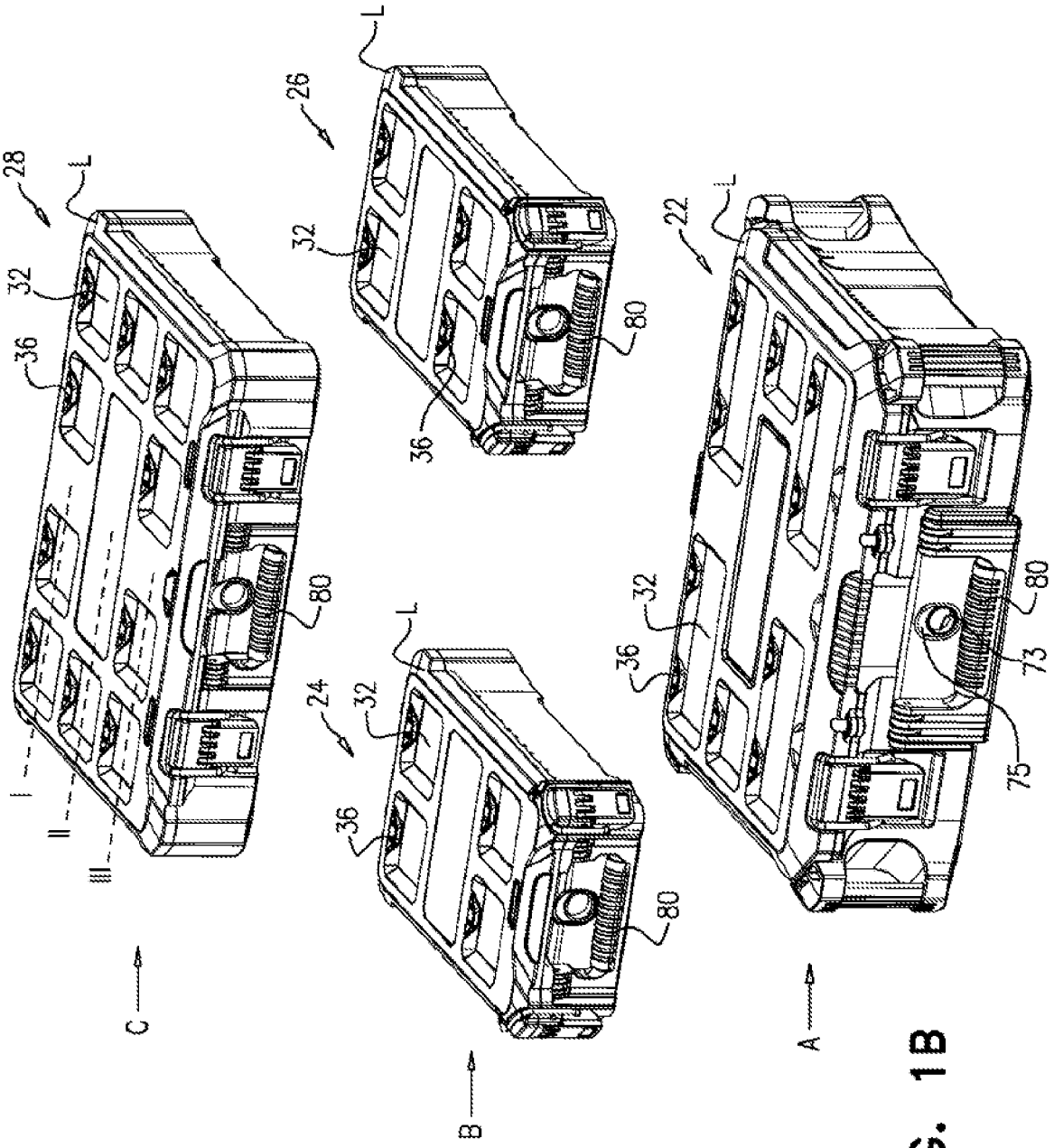

FIG. 1B

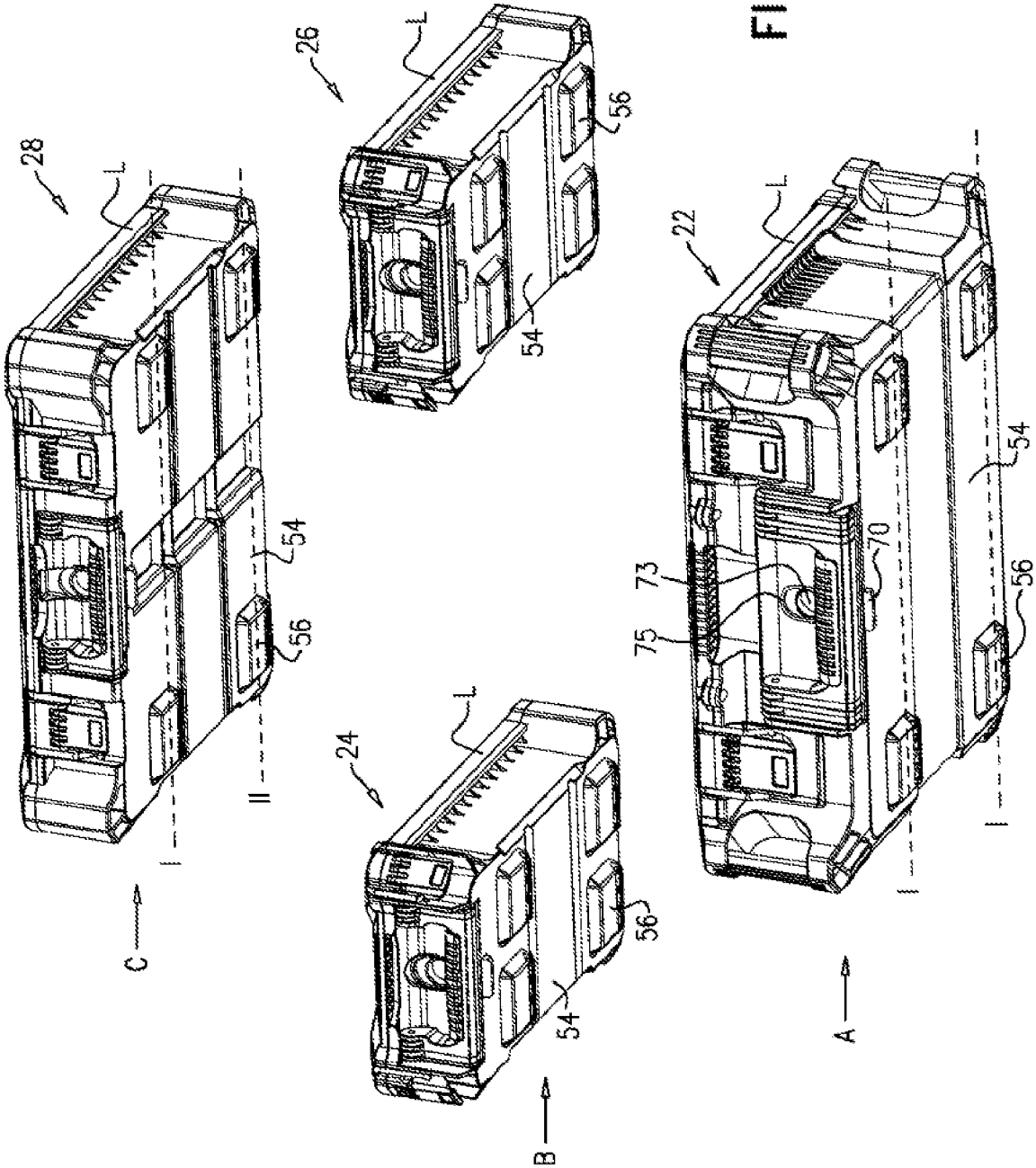

FIG. 1C

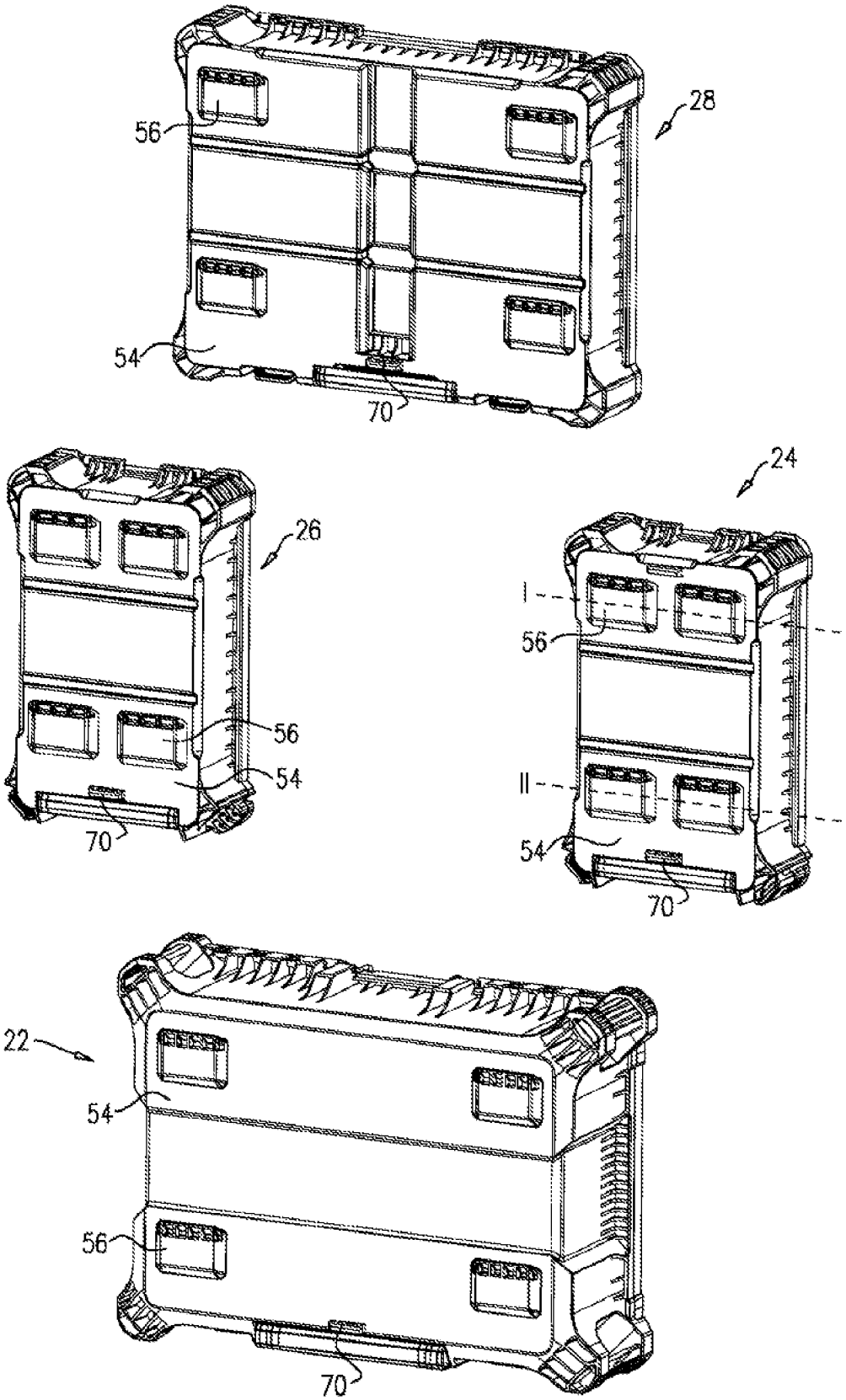

FIG. 1D

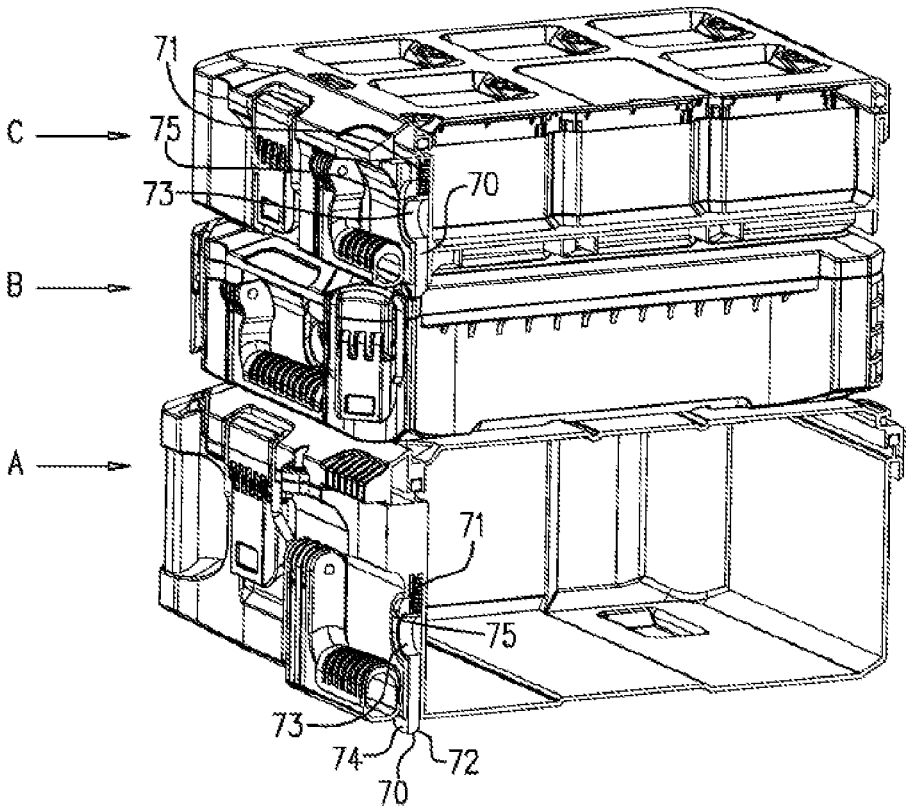

FIG. 2A

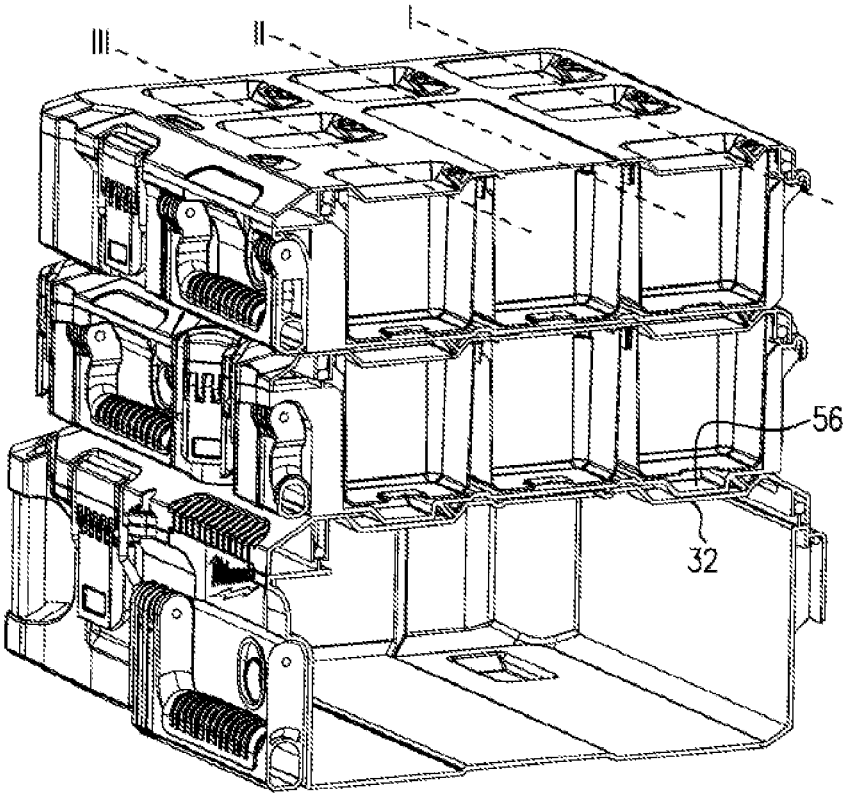

FIG. 2B

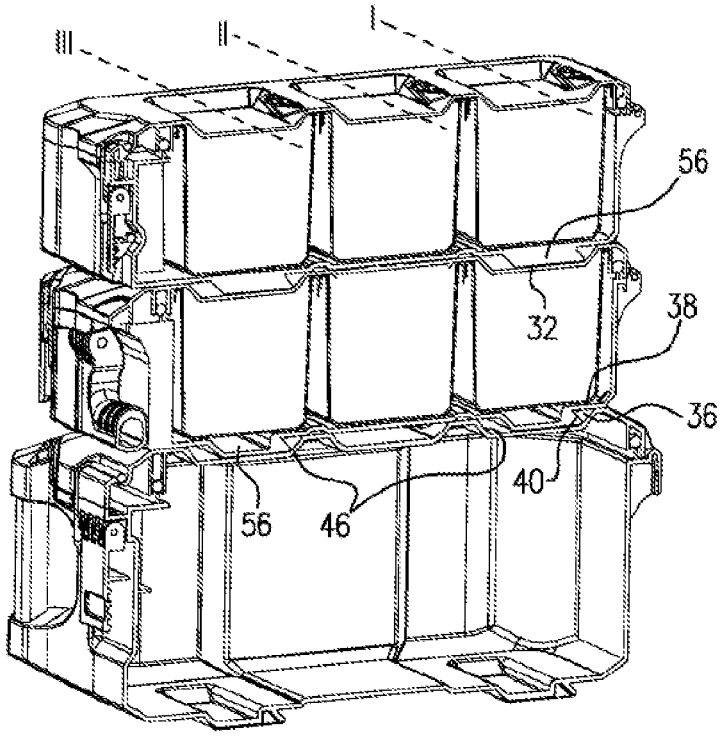

FIG. 2C

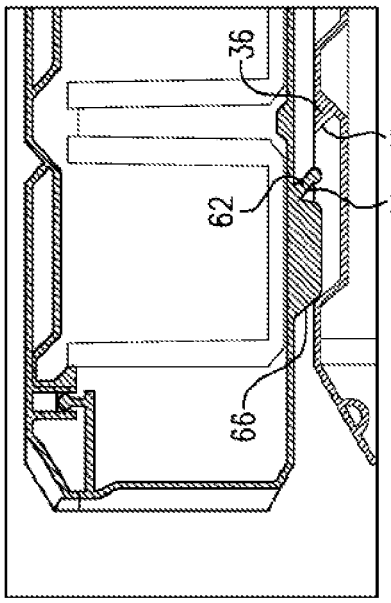

FIG. 3A

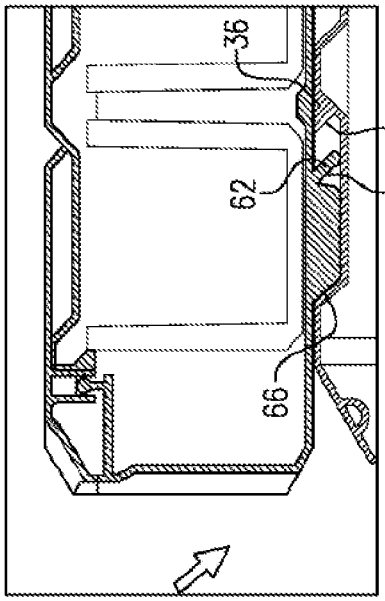

FIG. 3B

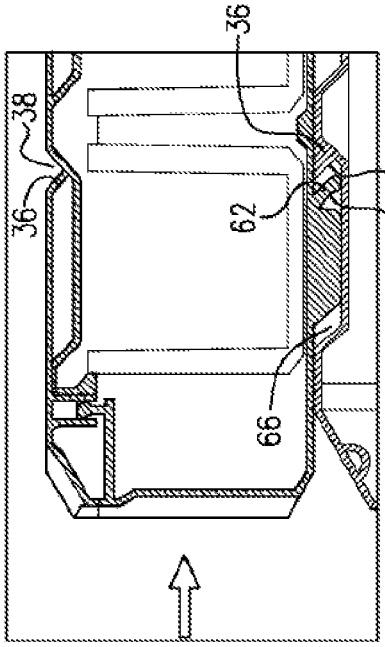

FIG. 3C

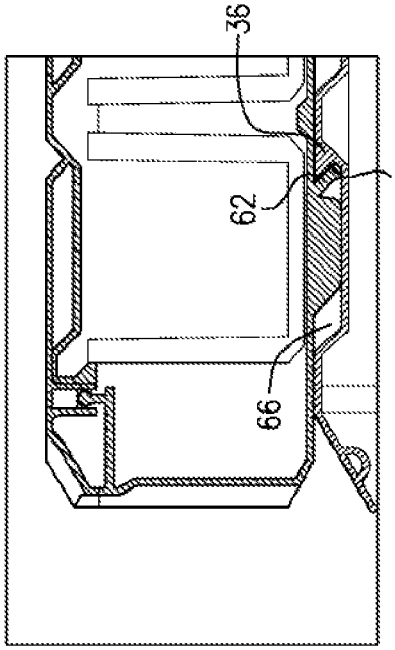

FIG. 3D

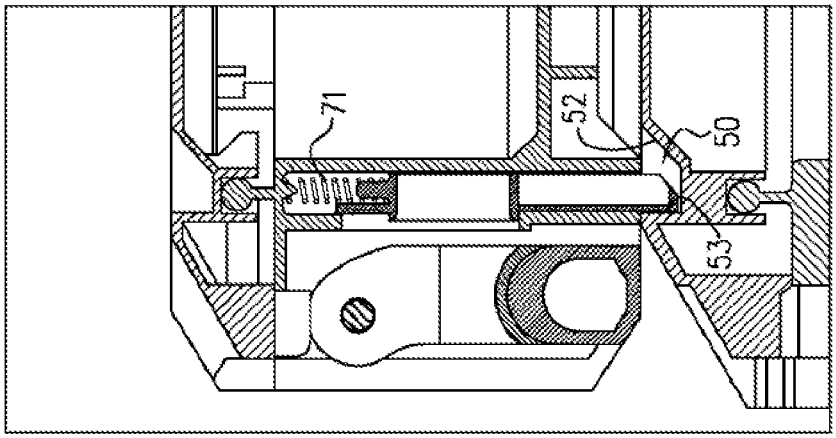

FIG. 4D

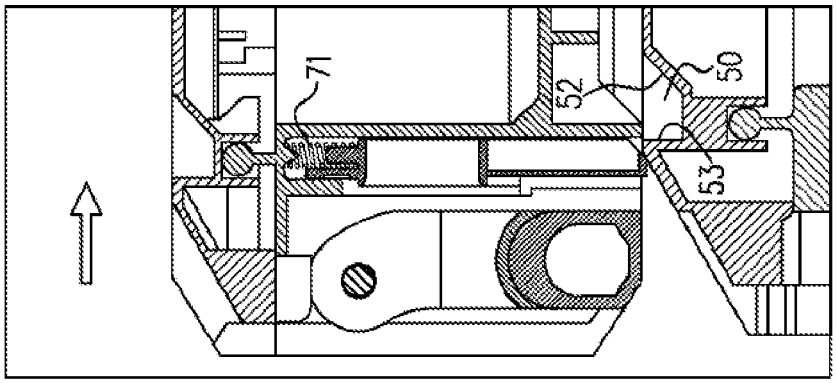

FIG. 4C

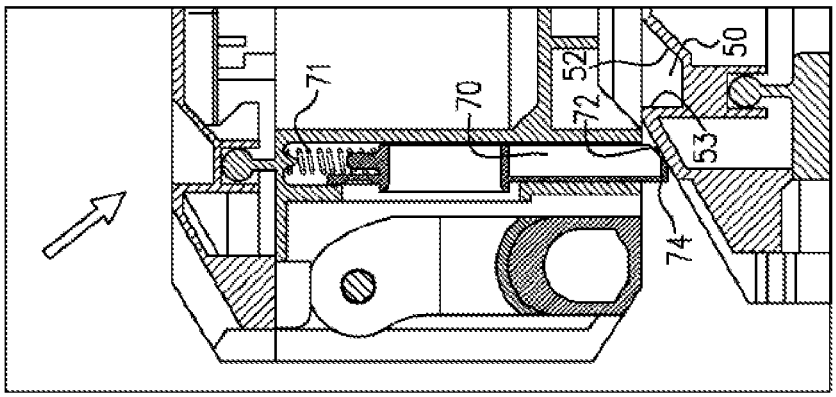

FIG. 4B

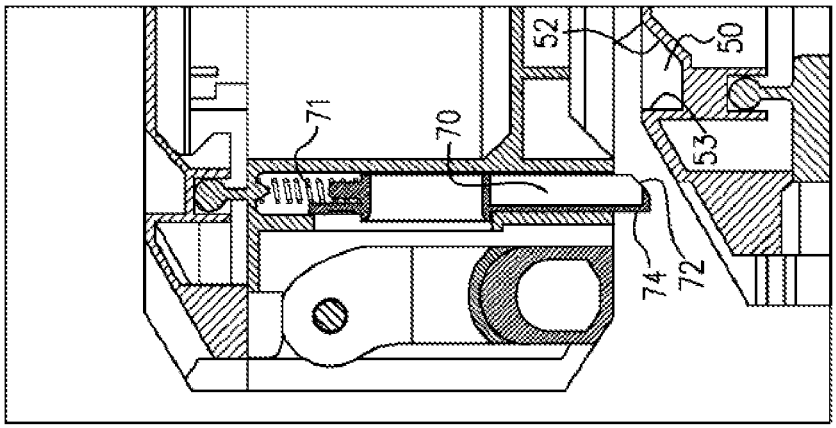

FIG. 4A

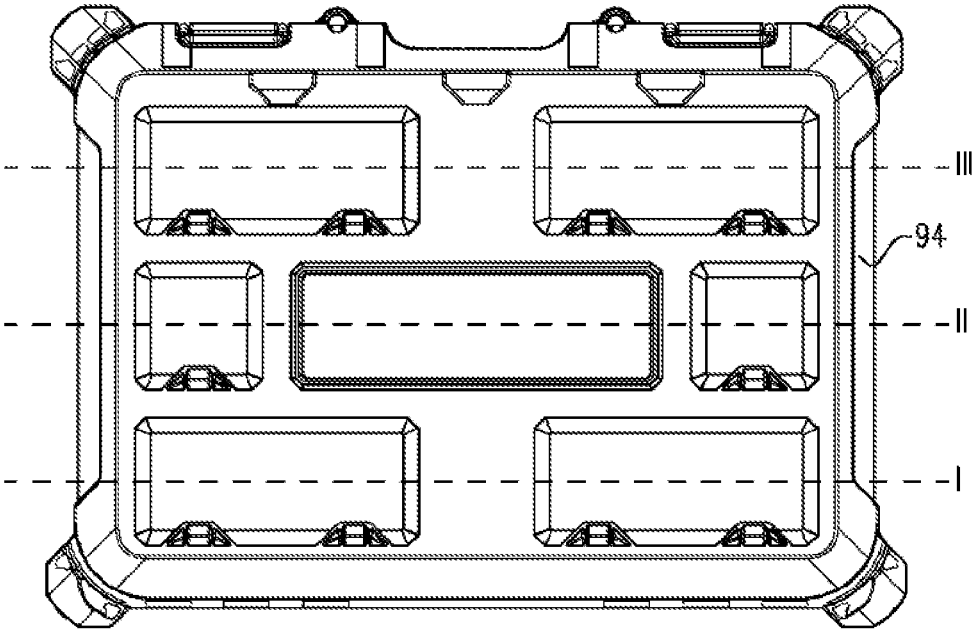

FIG. 5A

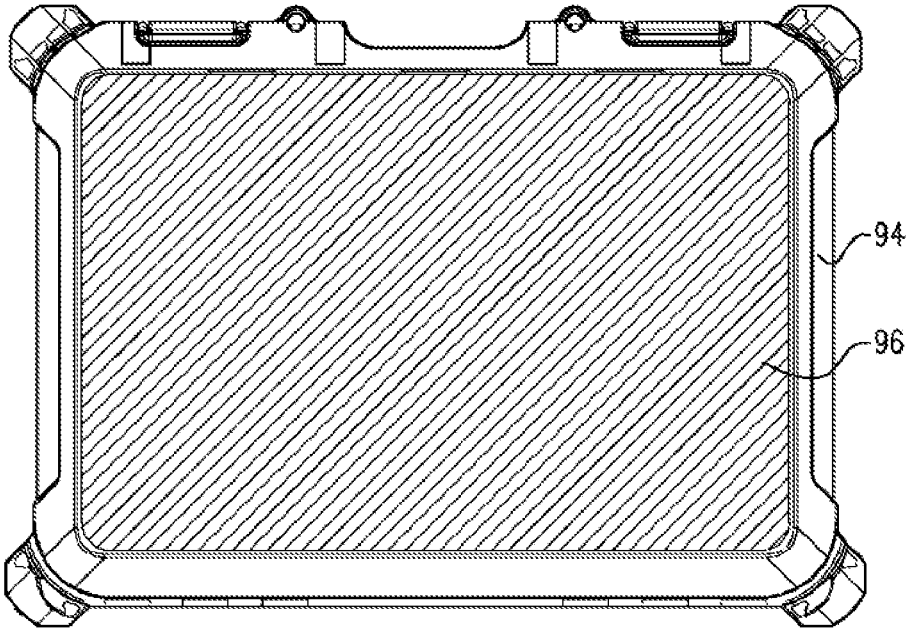

FIG. 5B

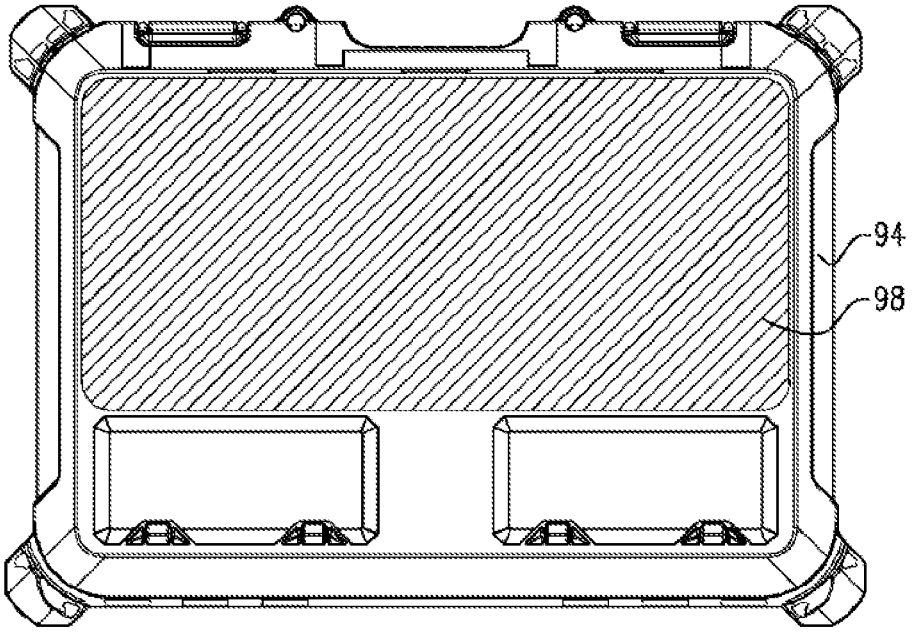

FIG. 5C

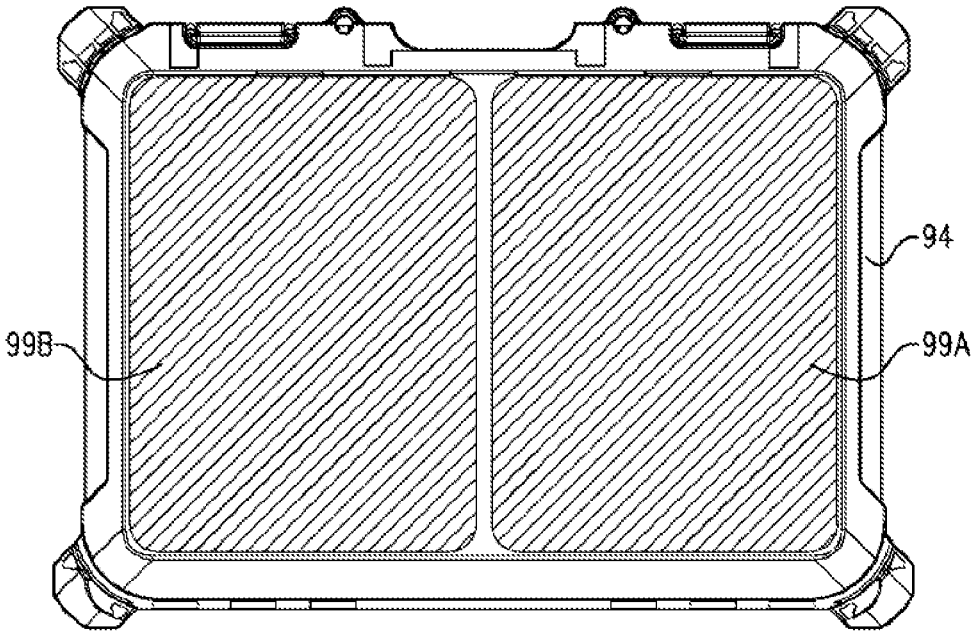

FIG. 5D

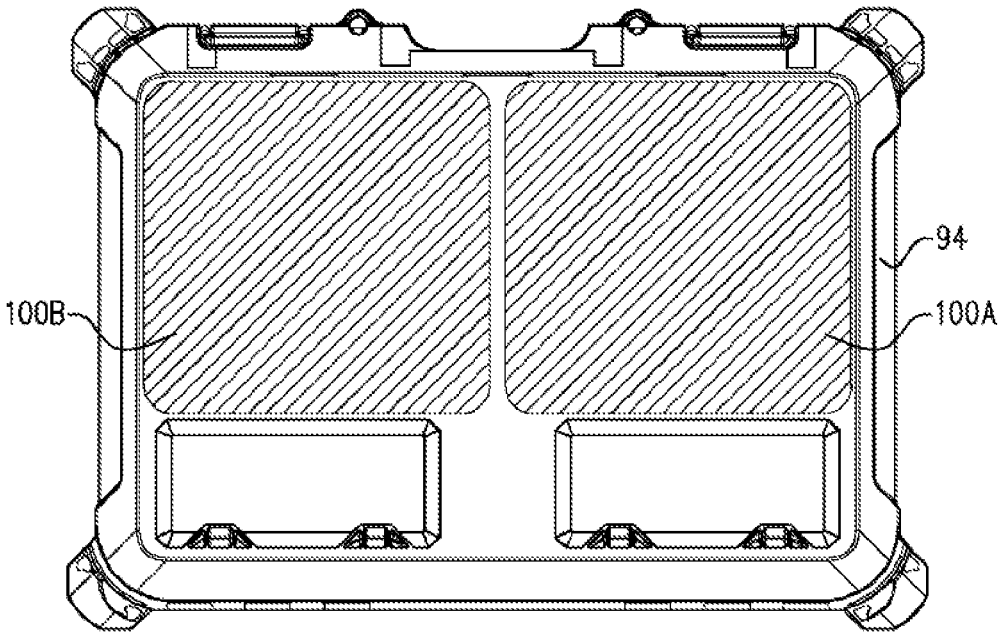

FIG. 5E

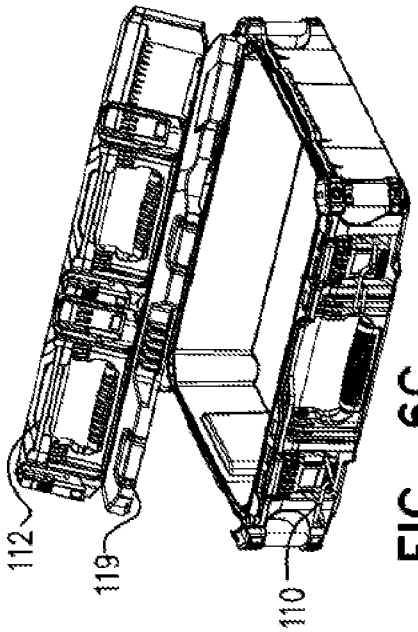

FIG. 6G

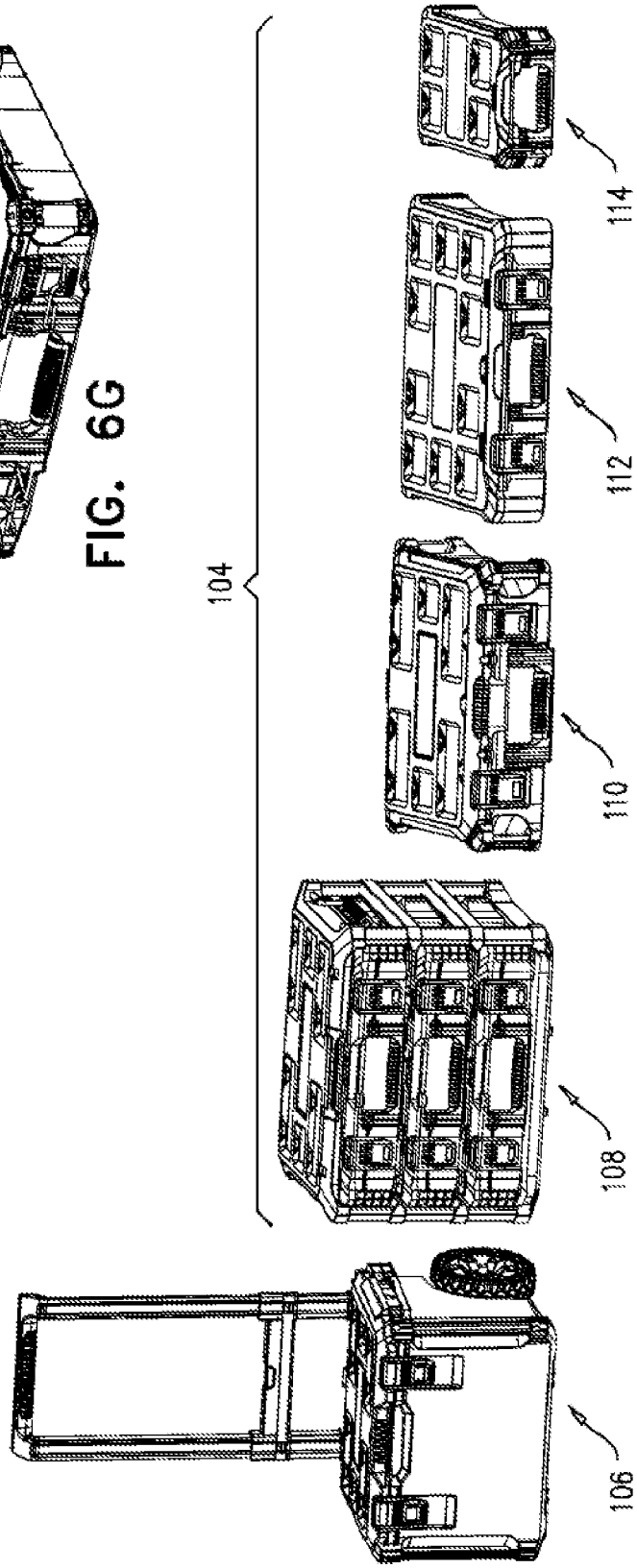

FIG. 6A

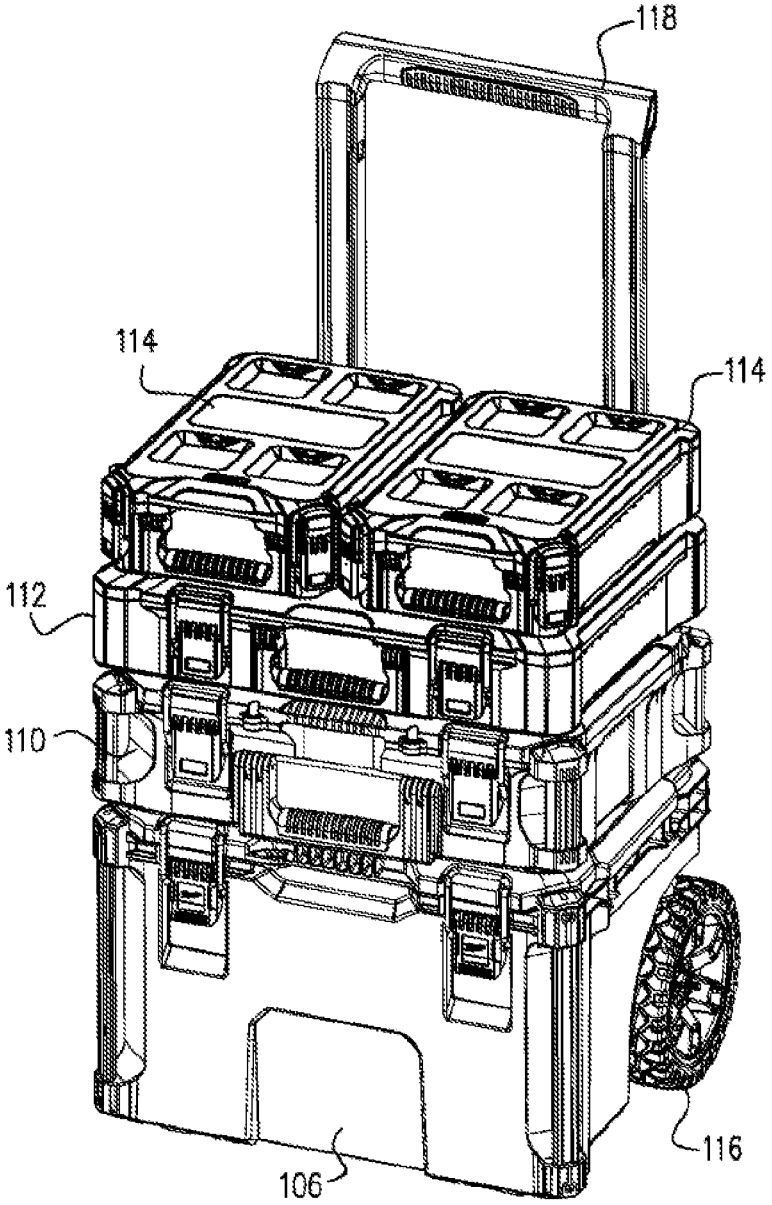

FIG. 6B

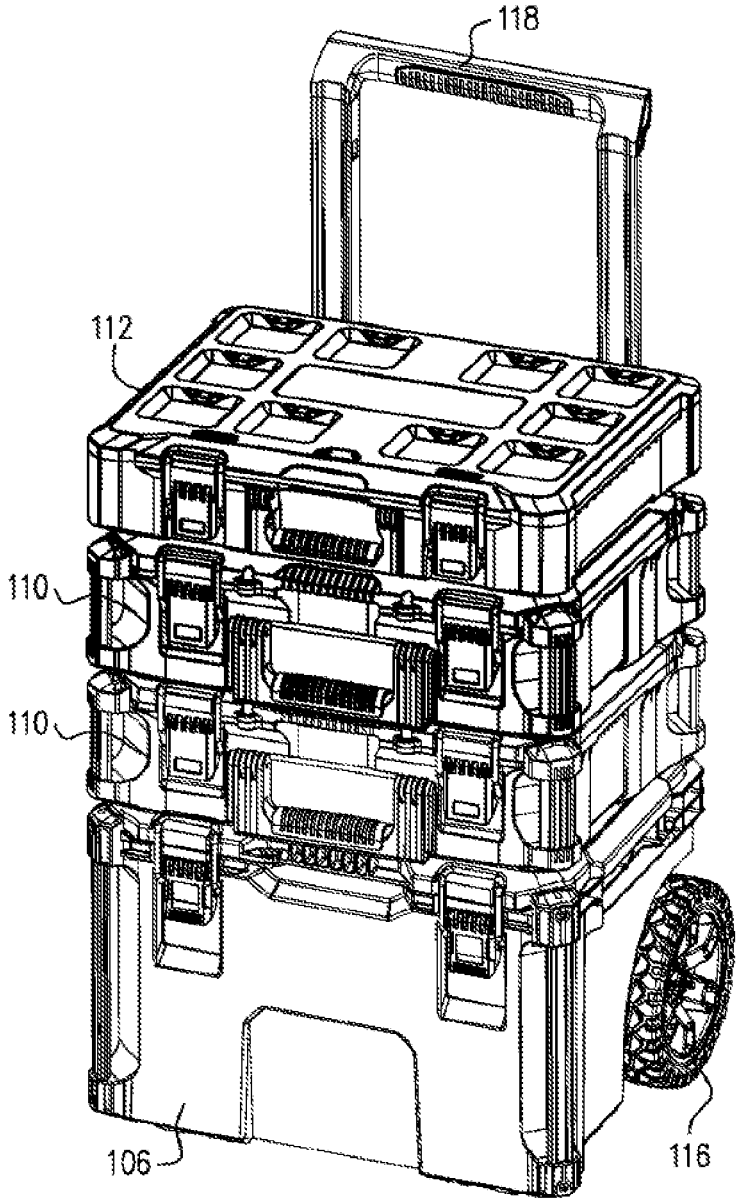

FIG. 6C

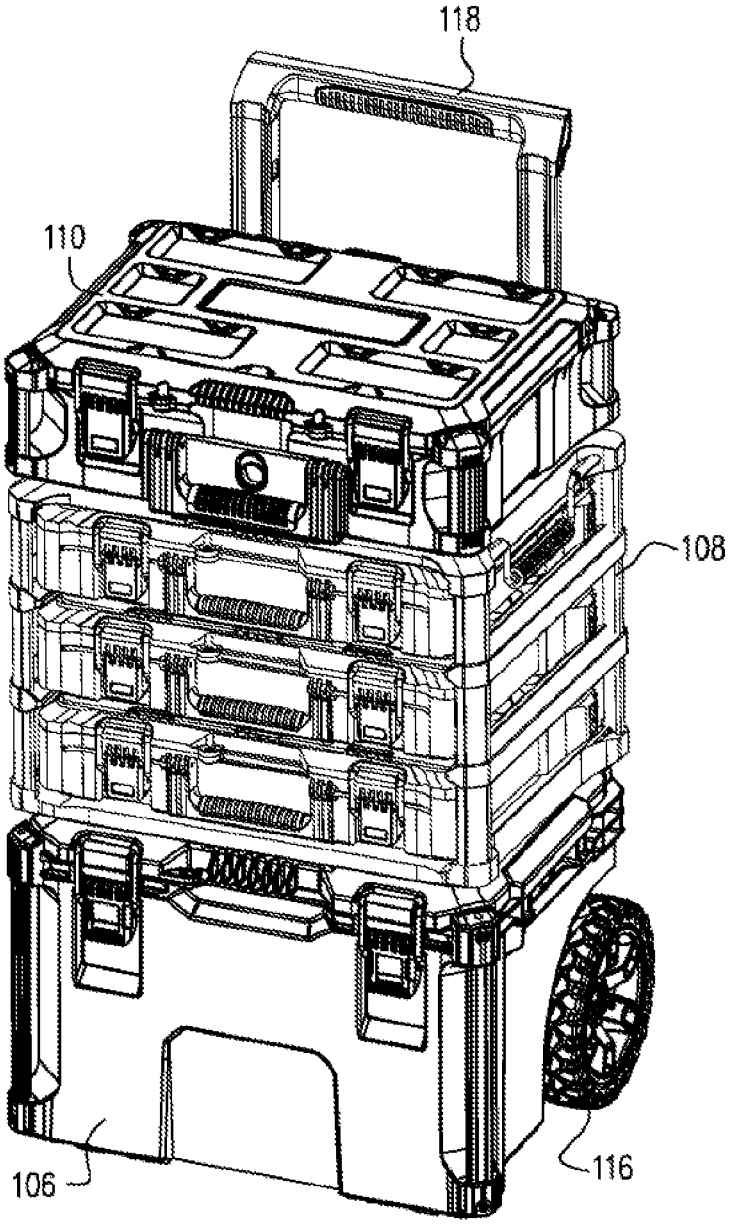

FIG. 6D

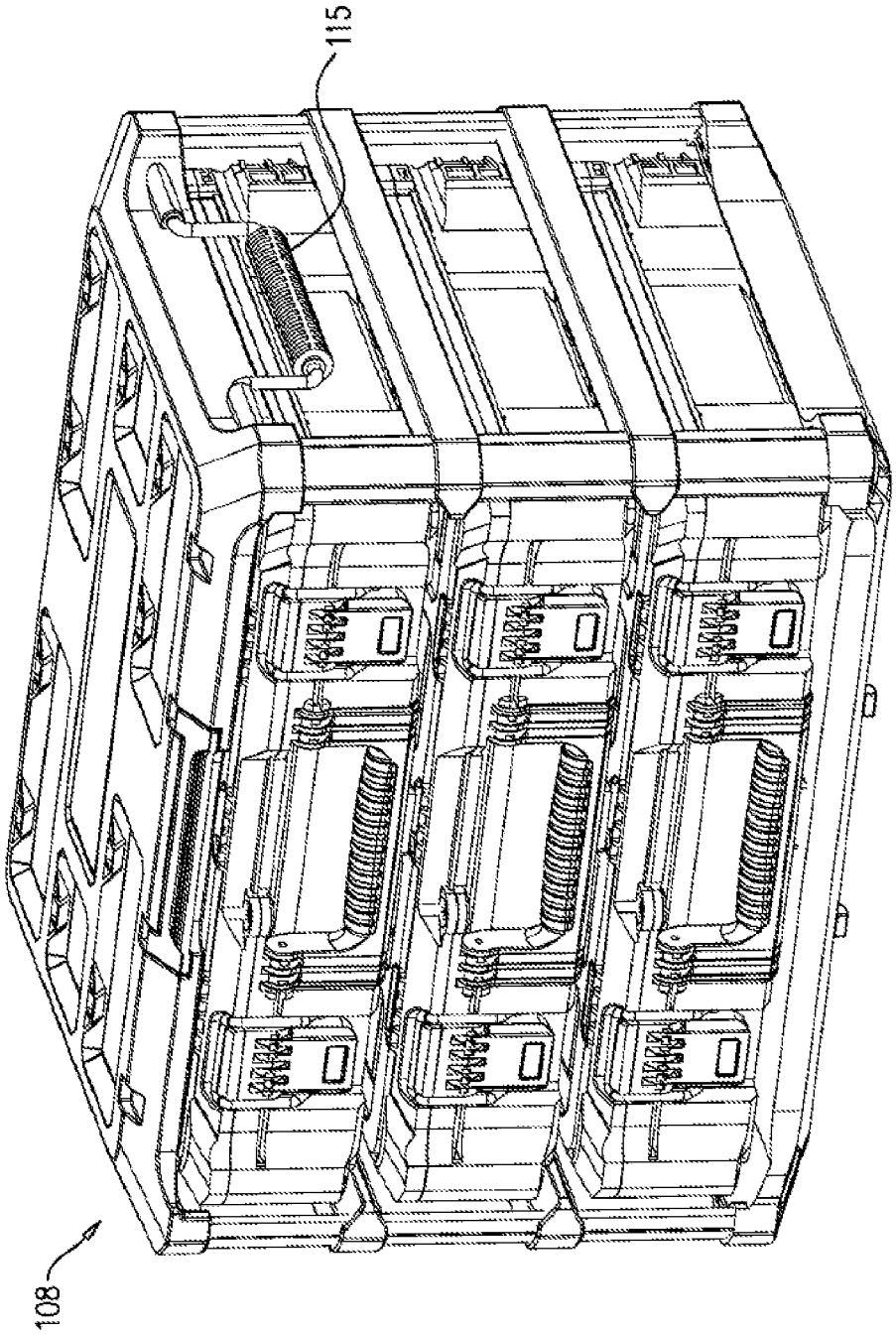

FIG. 6E

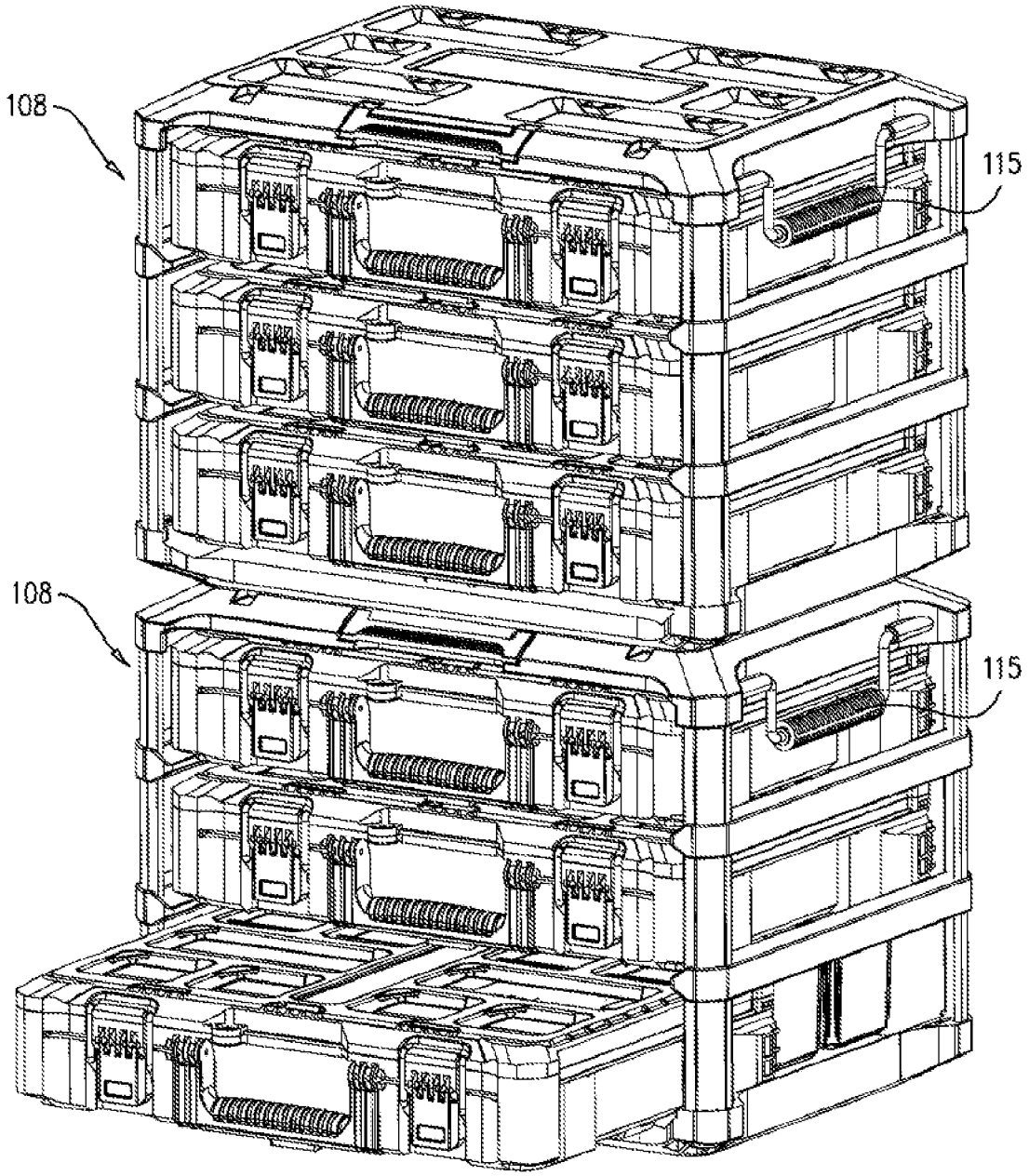

FIG. 6F

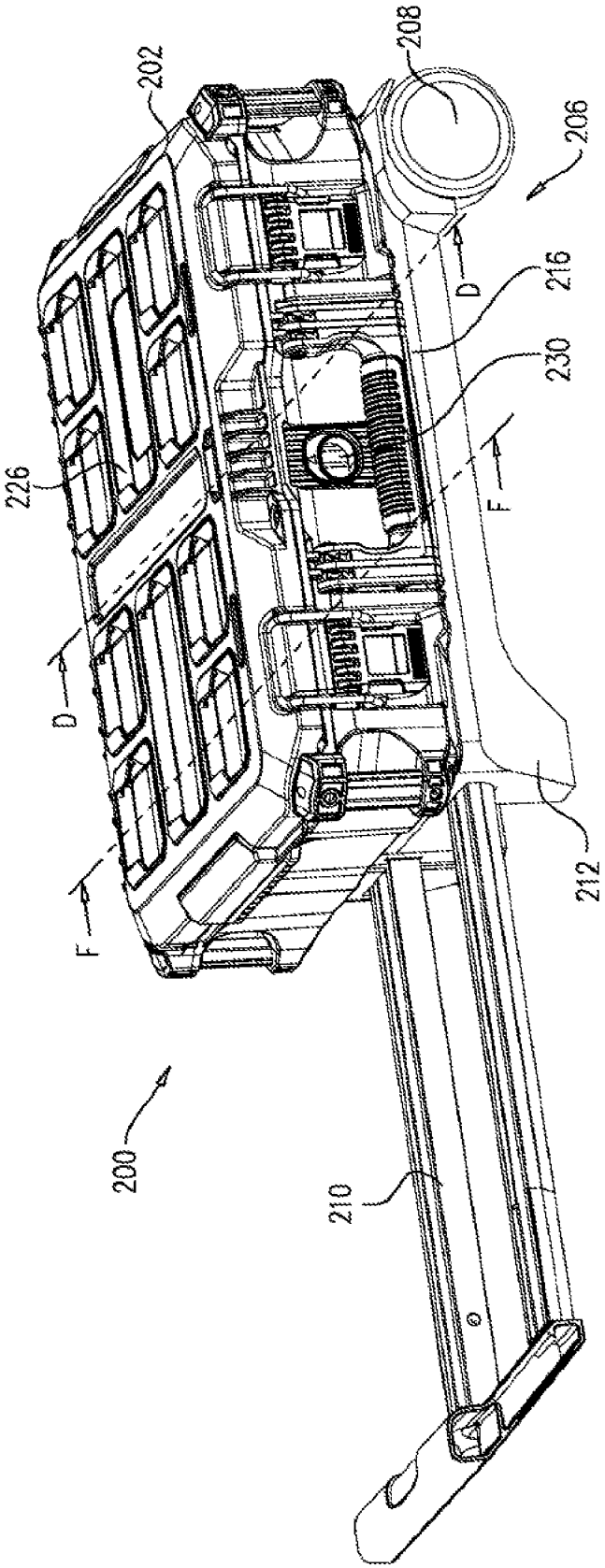

FIG. 7A

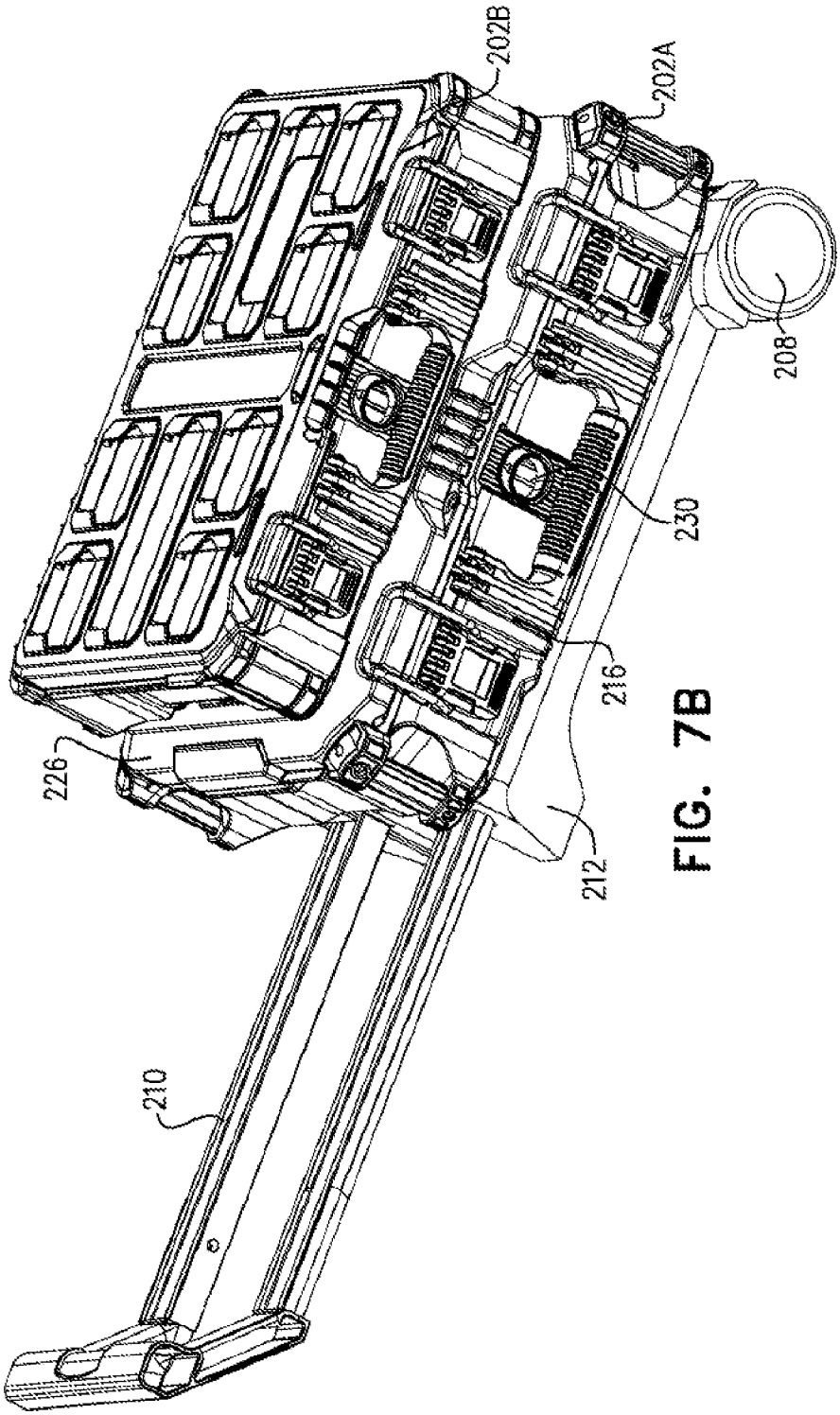

FIG. 7B

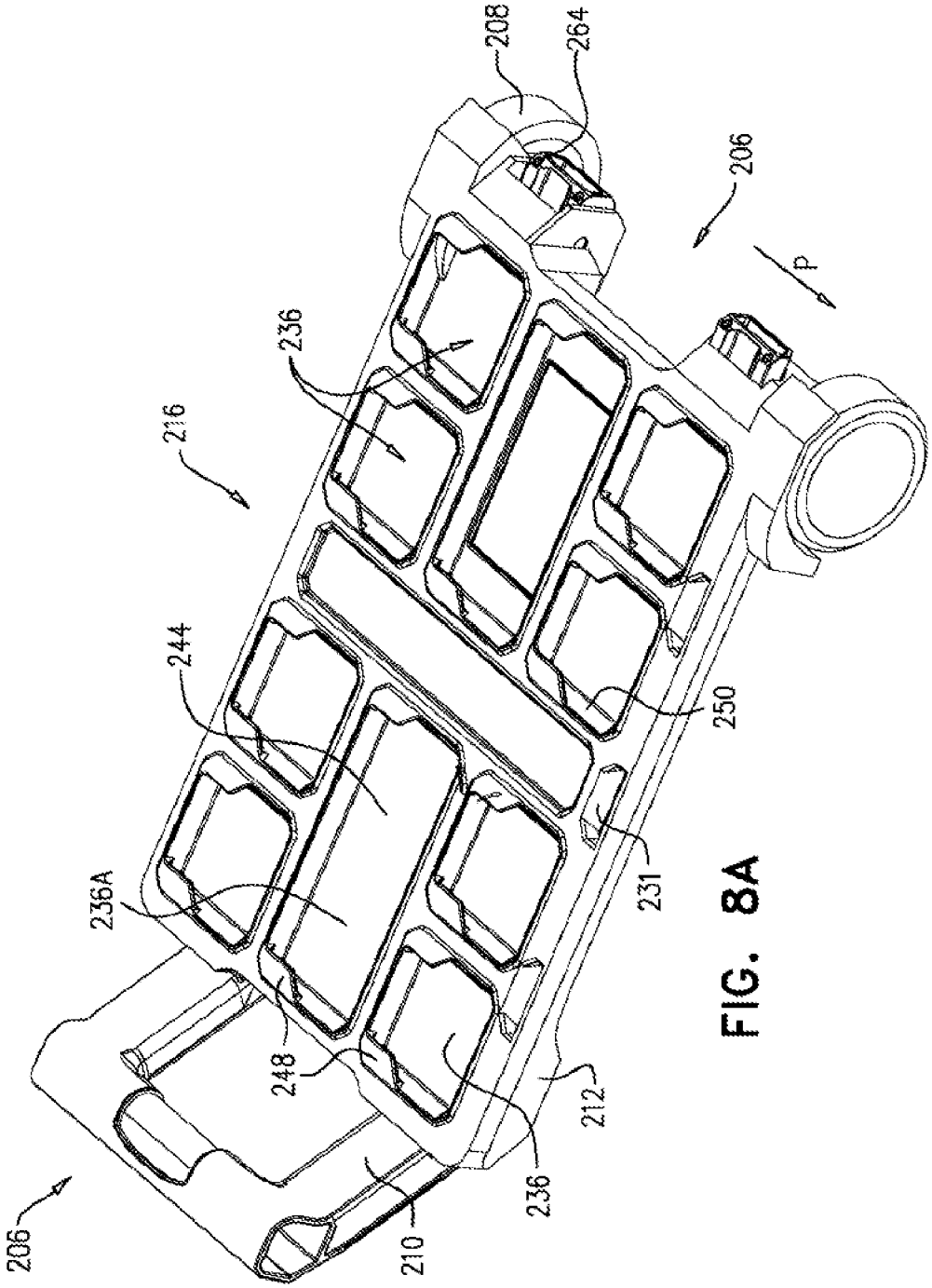

FIG. 8A

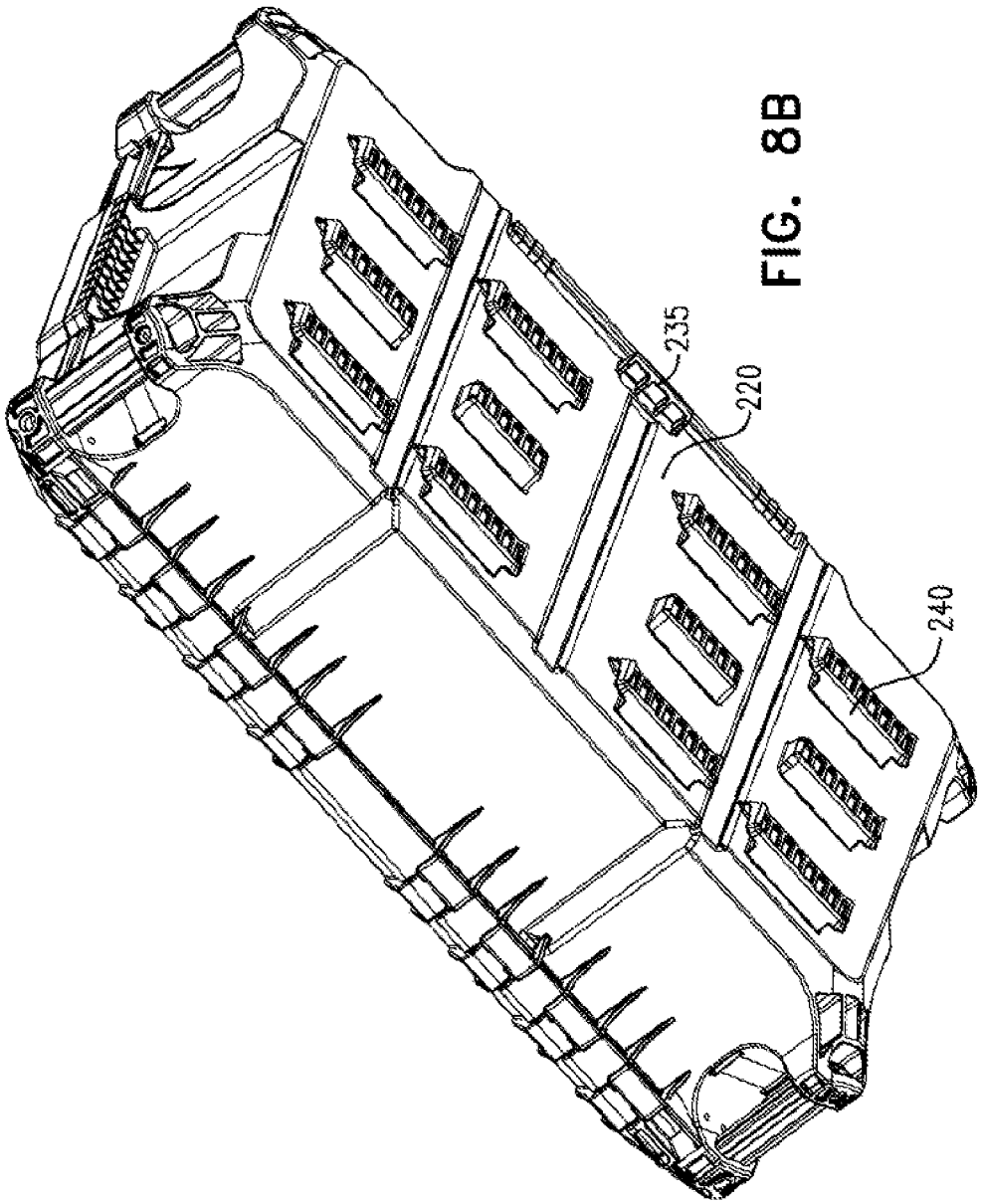

FIG. 8B

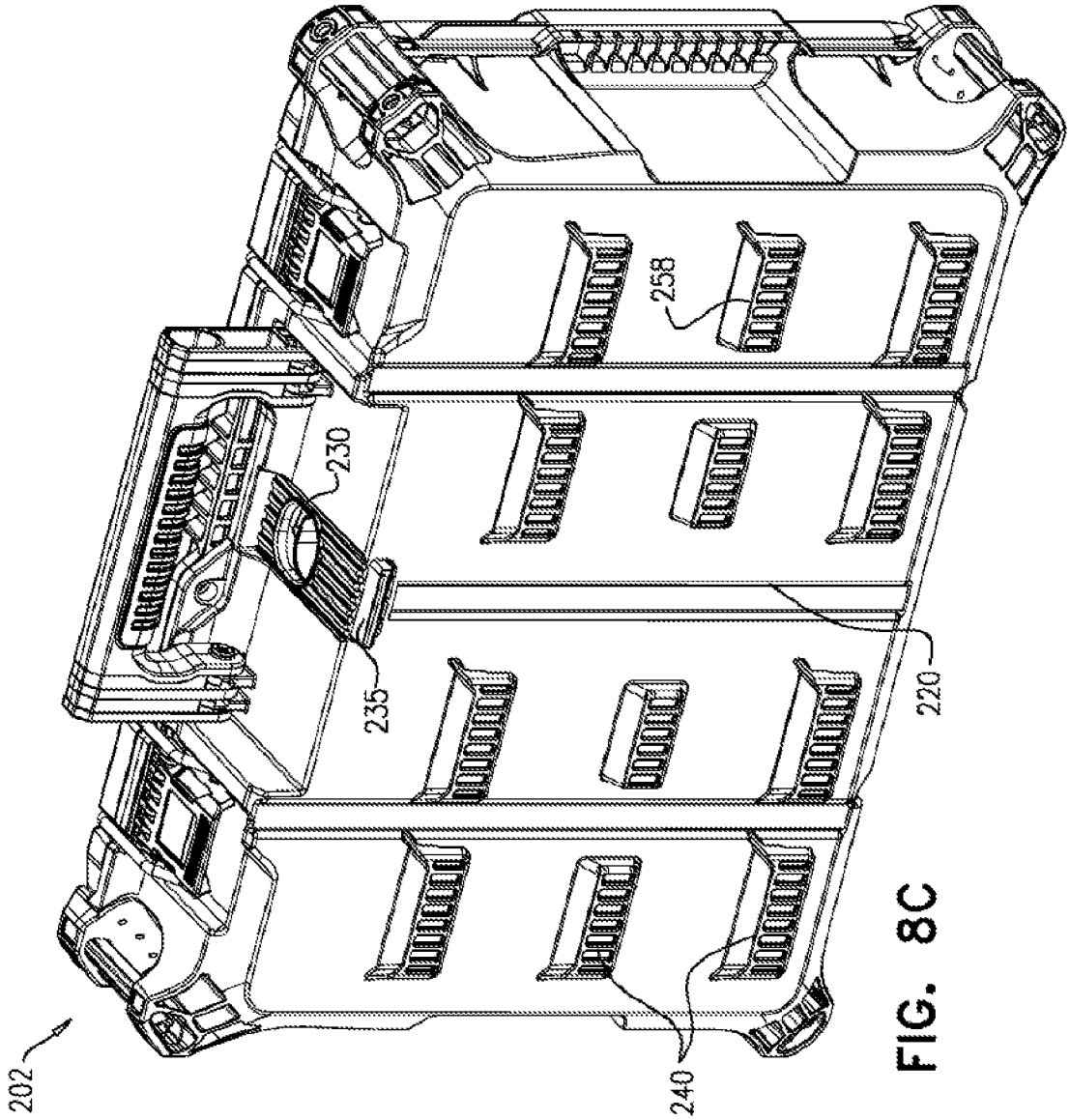

FIG. 8C

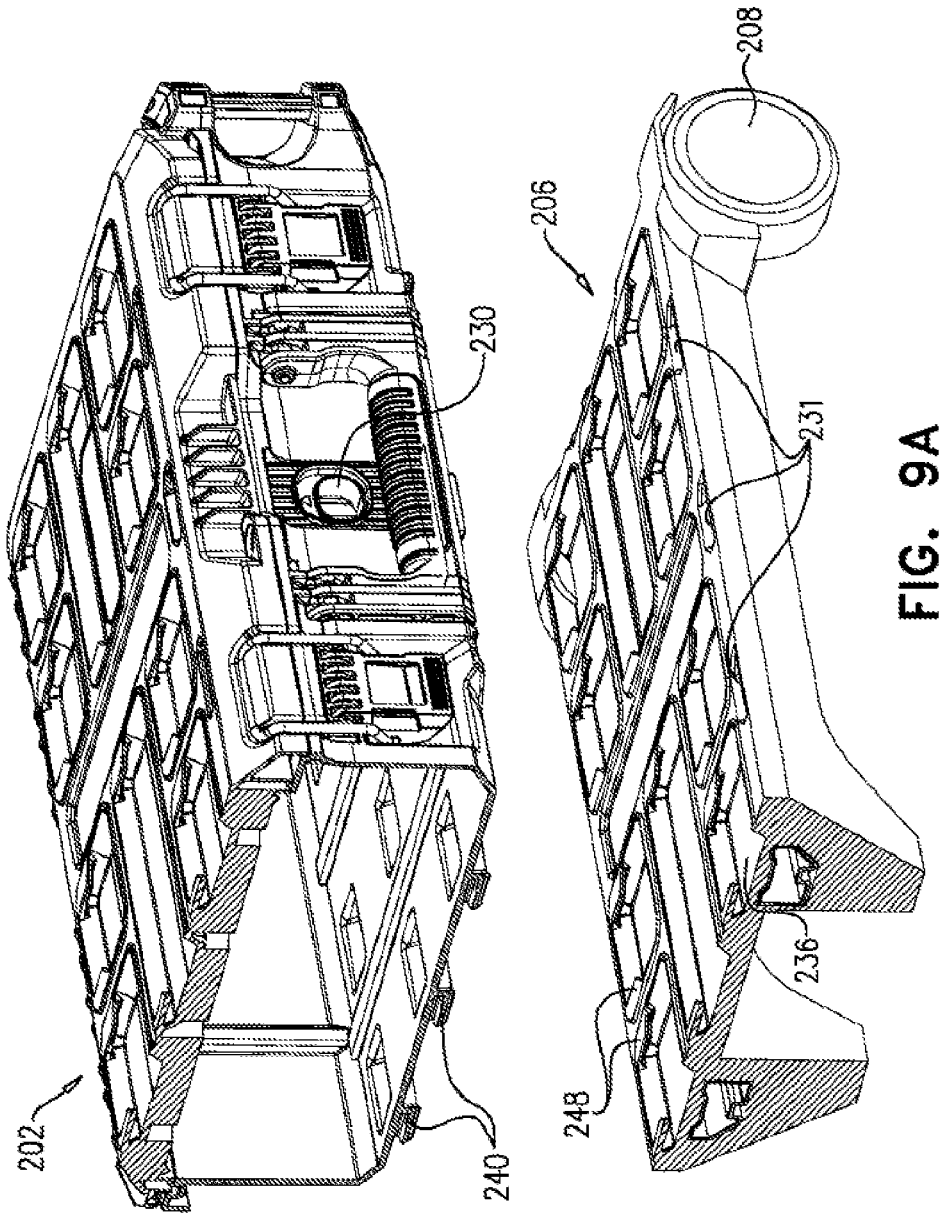

FIG. 9A

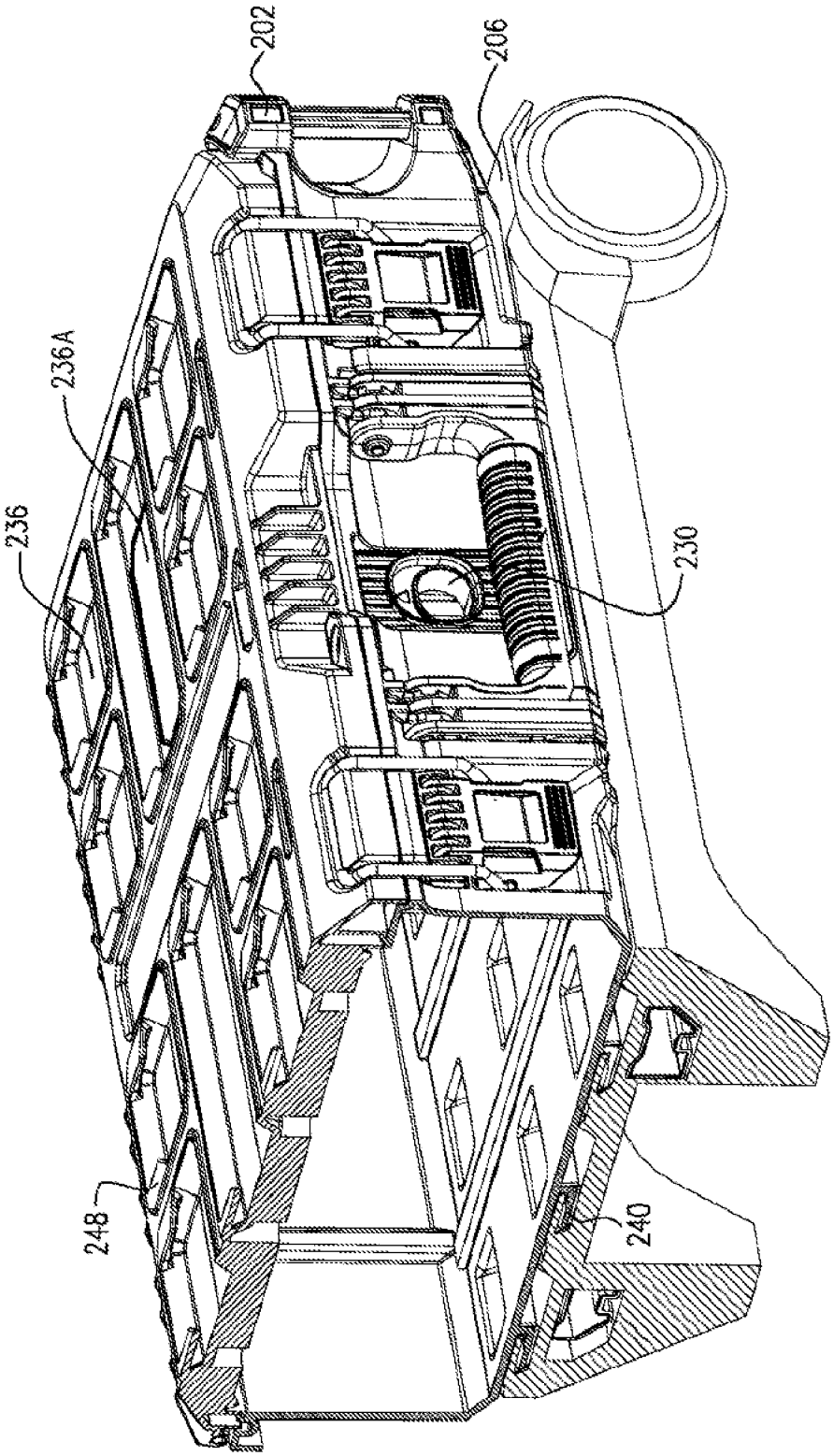

FIG. 9B

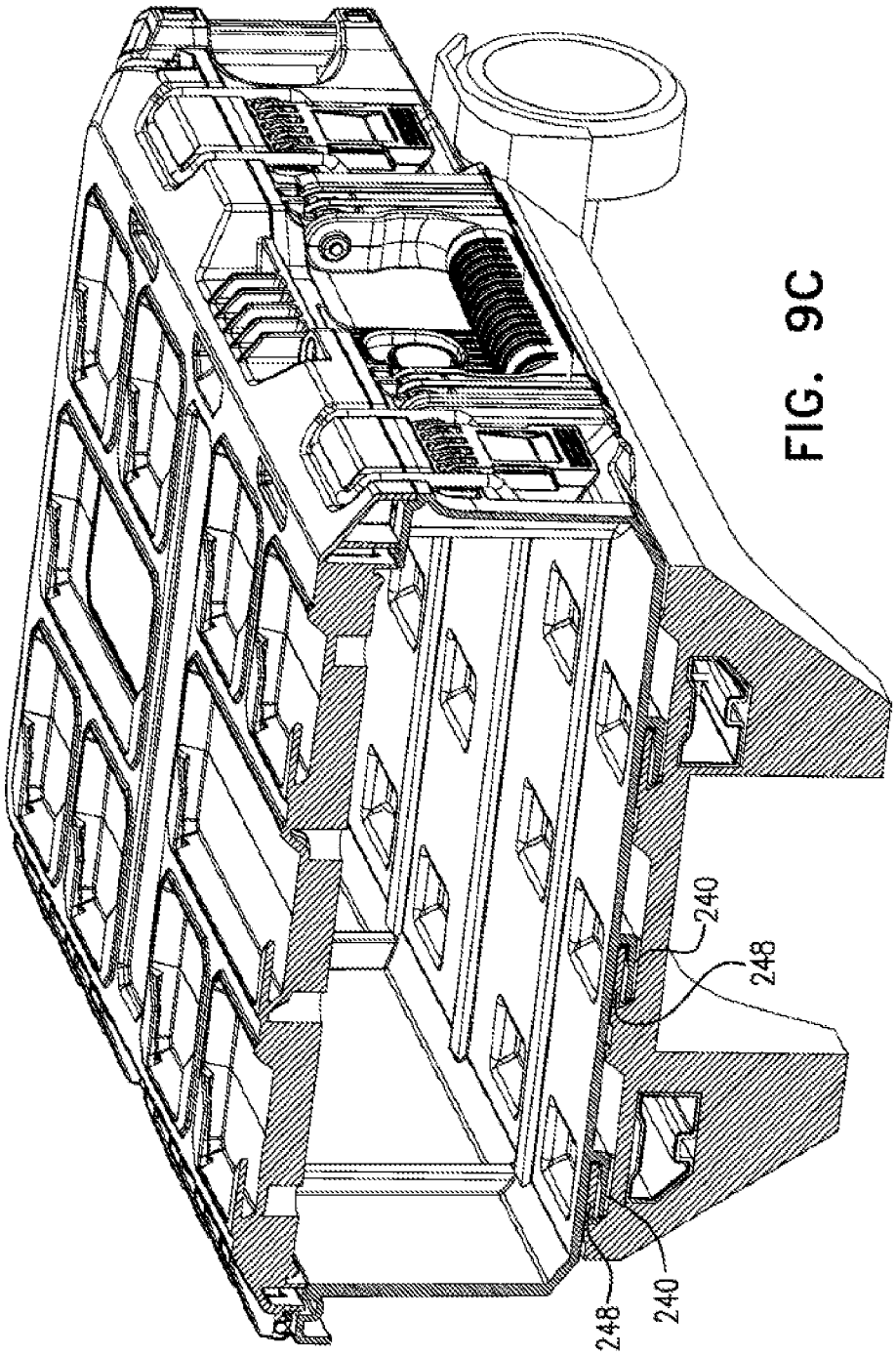

FIG. 9C

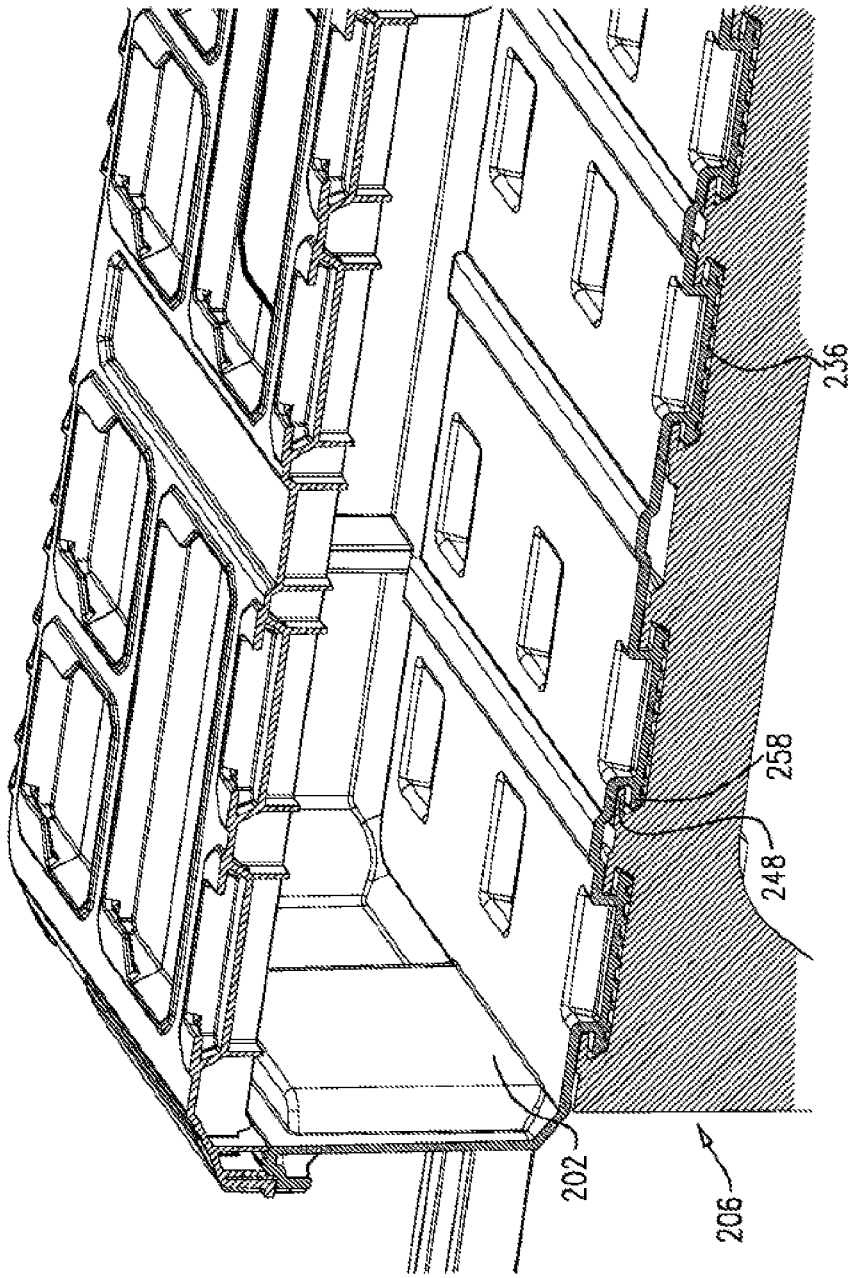

FIG. 9D

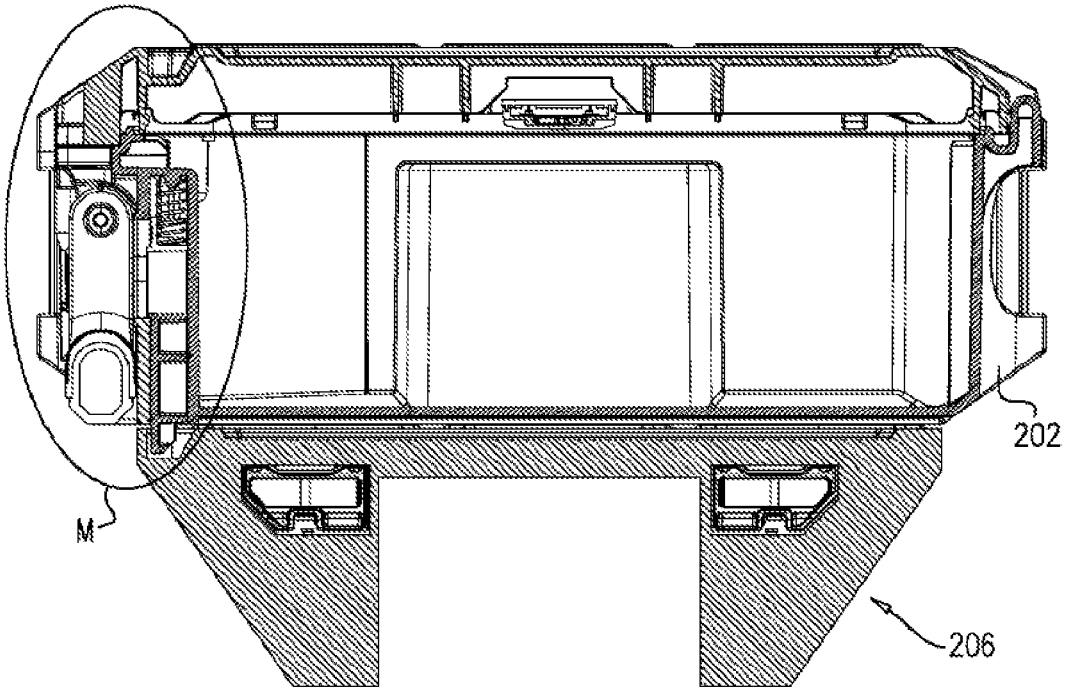

FIG. 10A

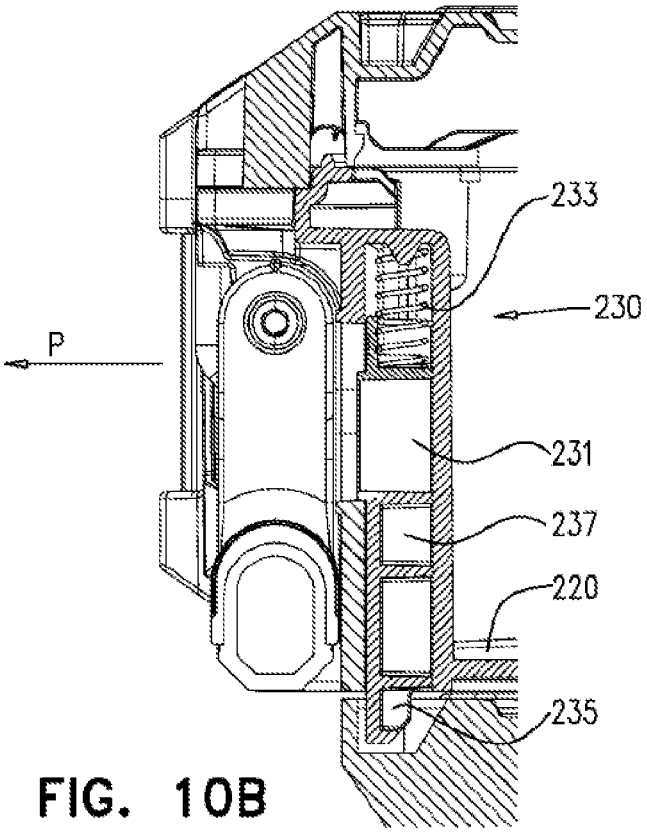

FIG. 10B

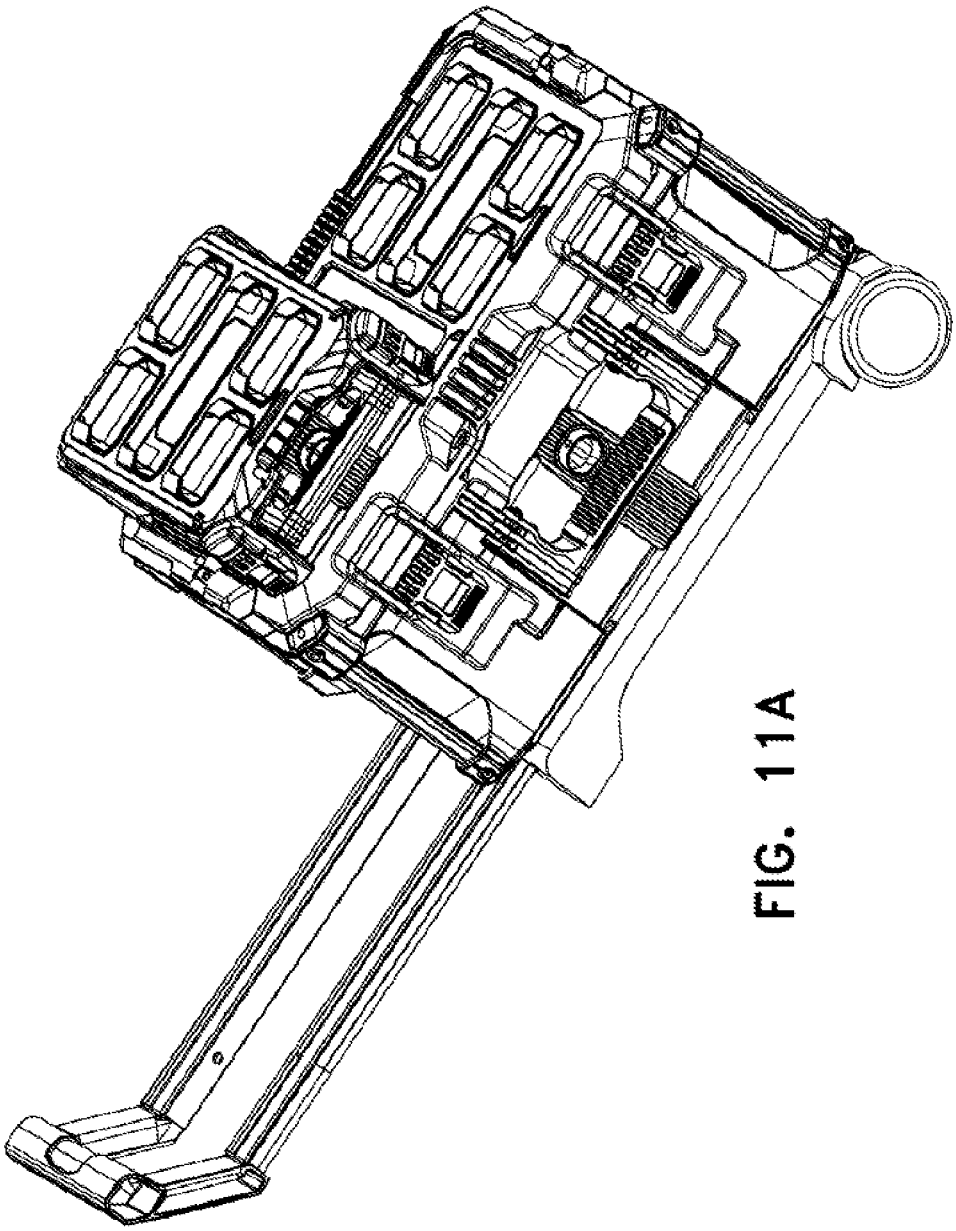

FIG. 11A

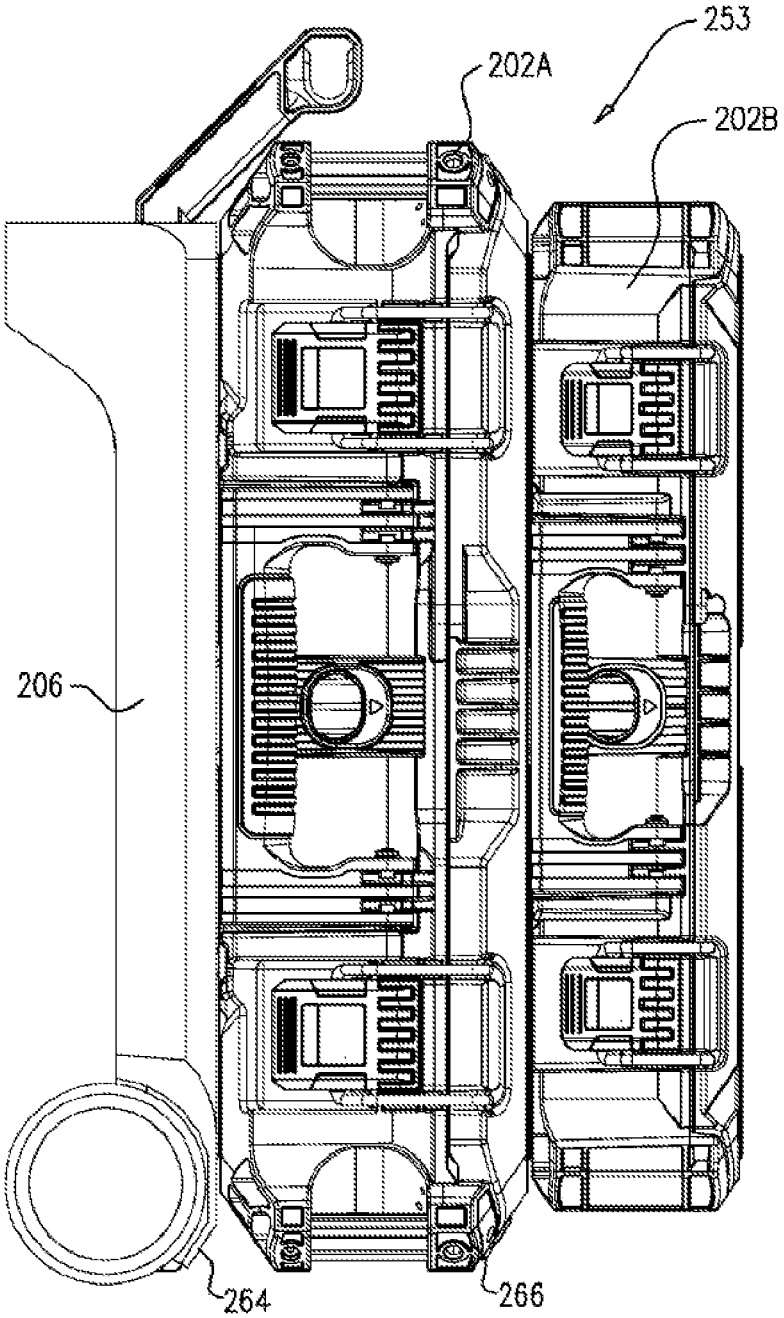

FIG. 11B

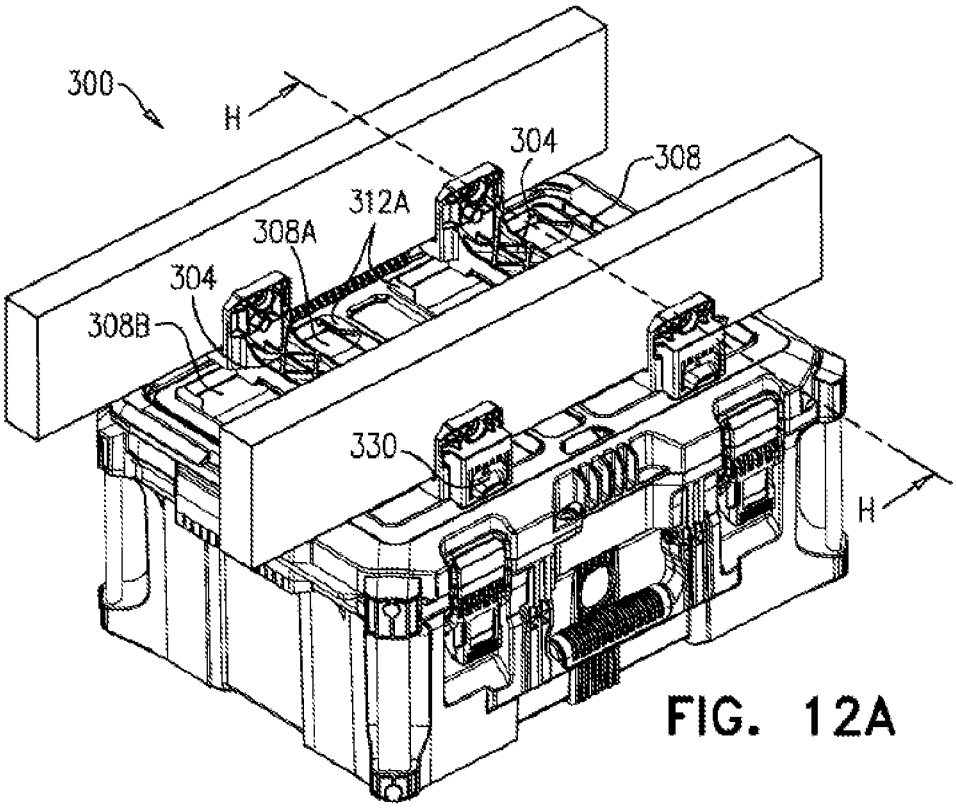

FIG. 12A

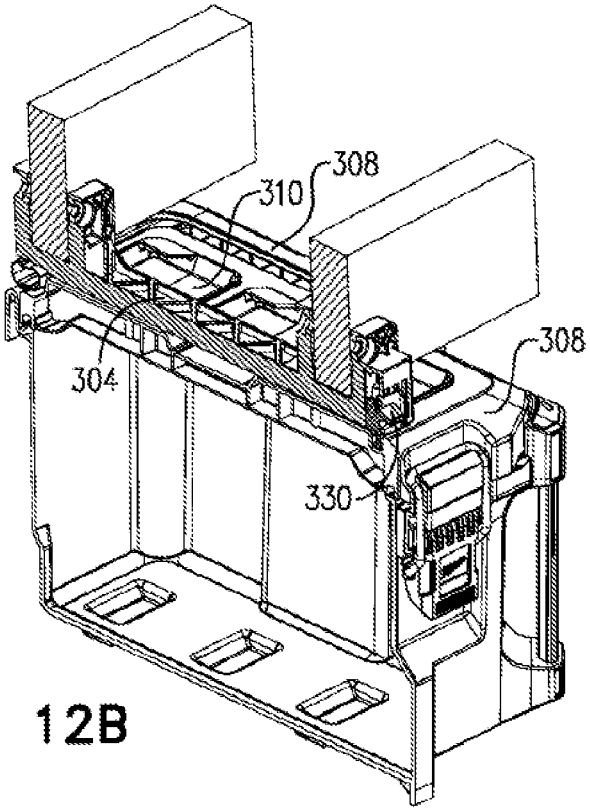

FIG. 12B

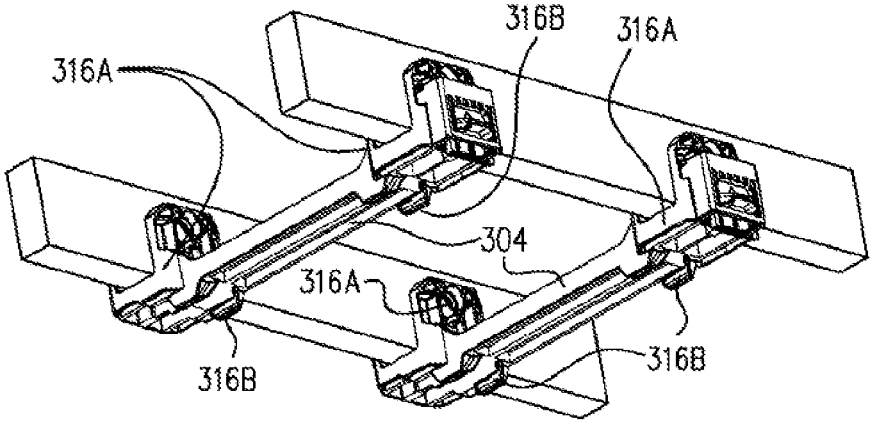
316B
316A
316A
304
316A
316B
316B

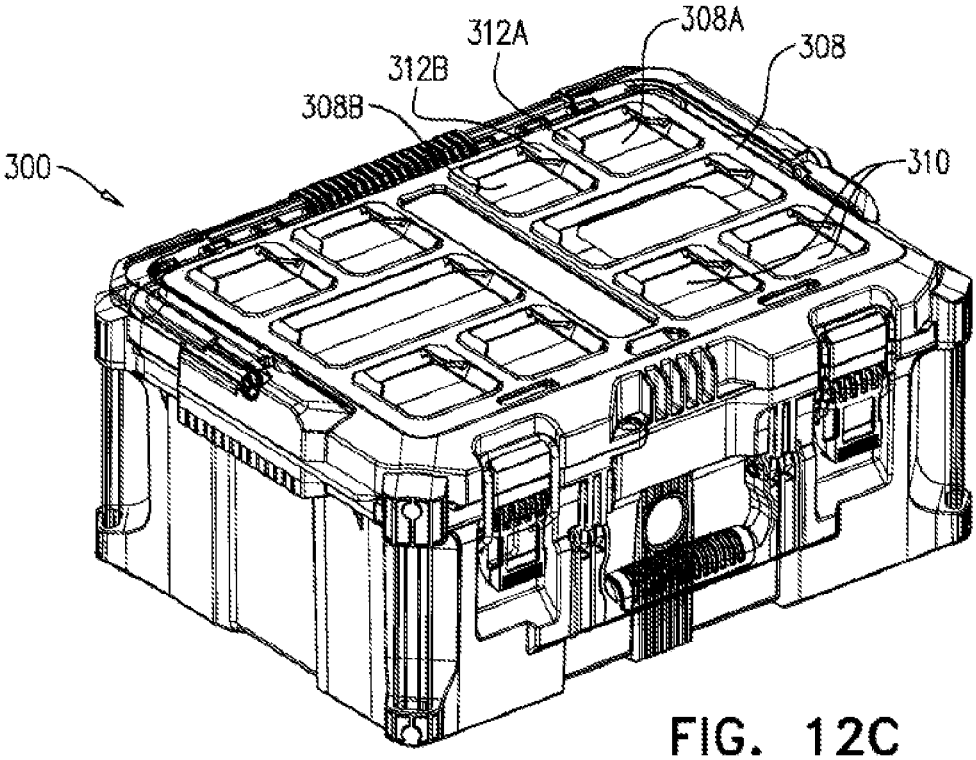
312A
308A
308
312B
308B
300
310

FIG. 12C

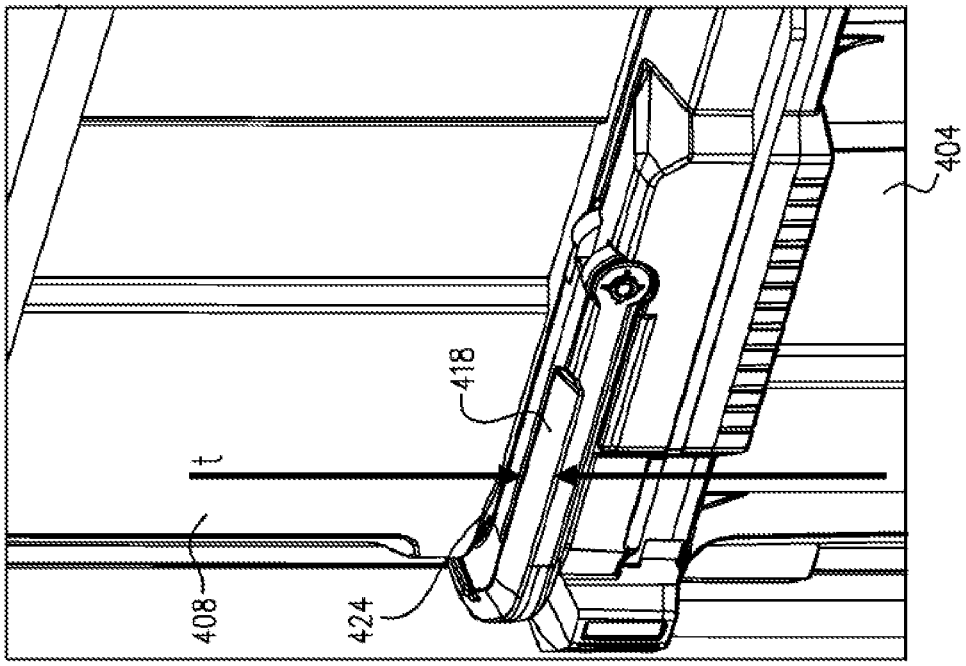

FIG. 13B

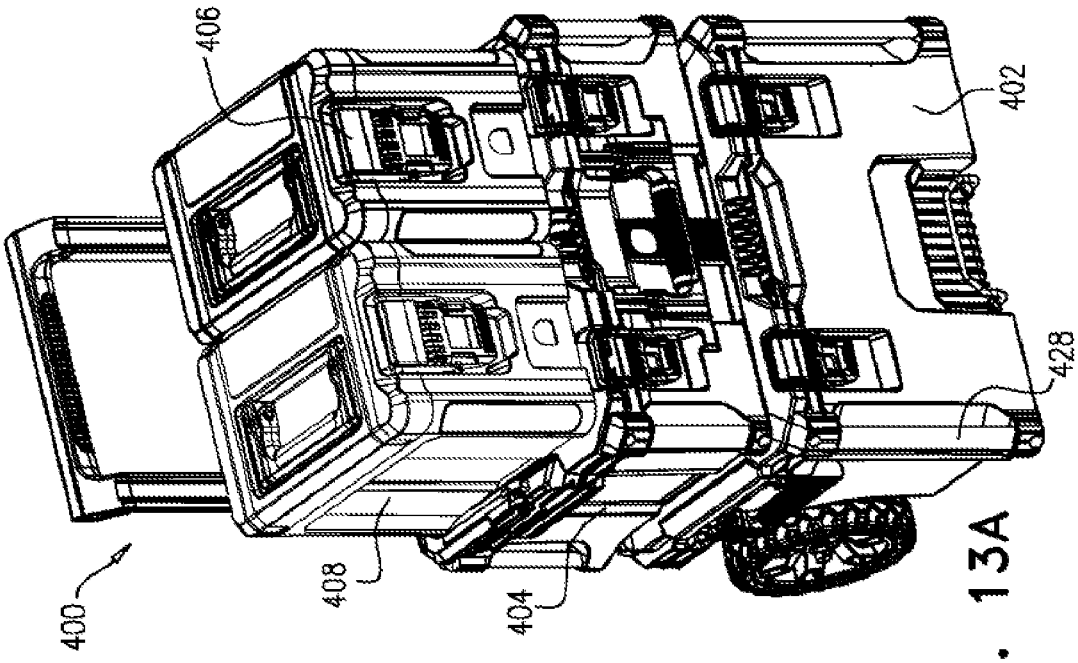

FIG. 13A

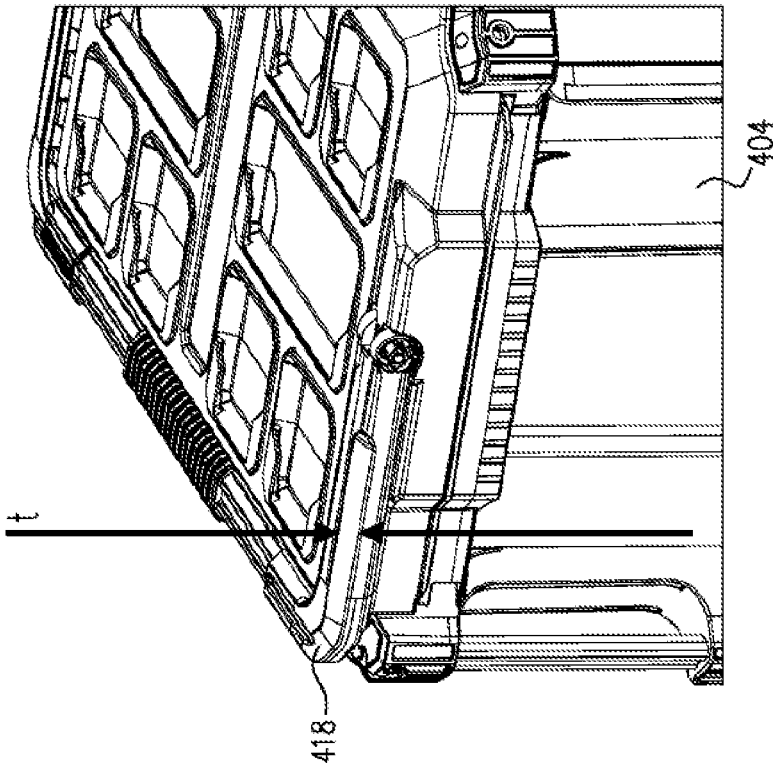

FIG. 13D

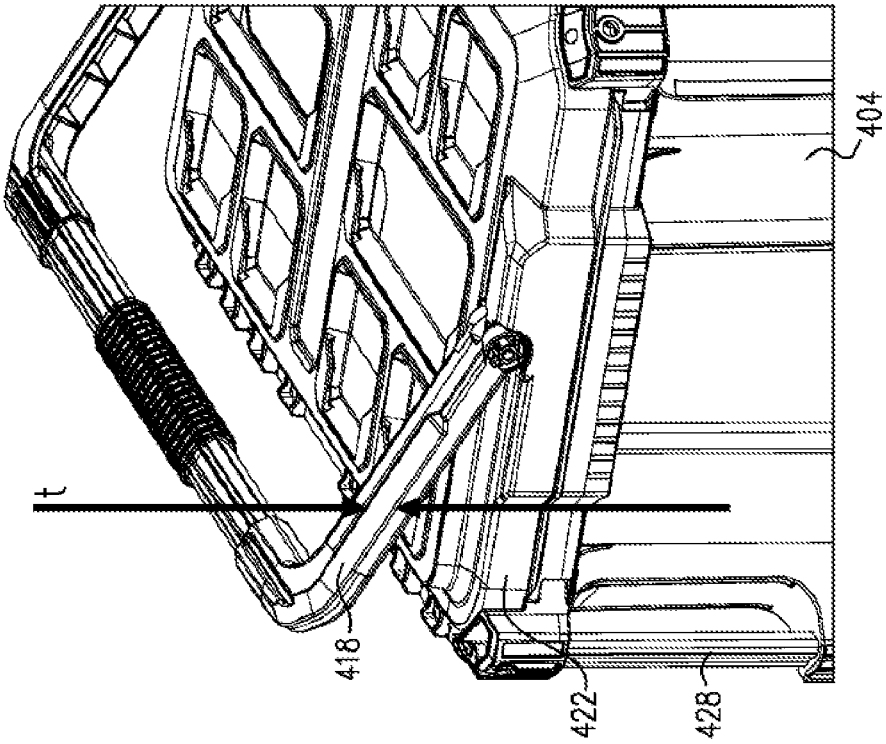

FIG. 13C

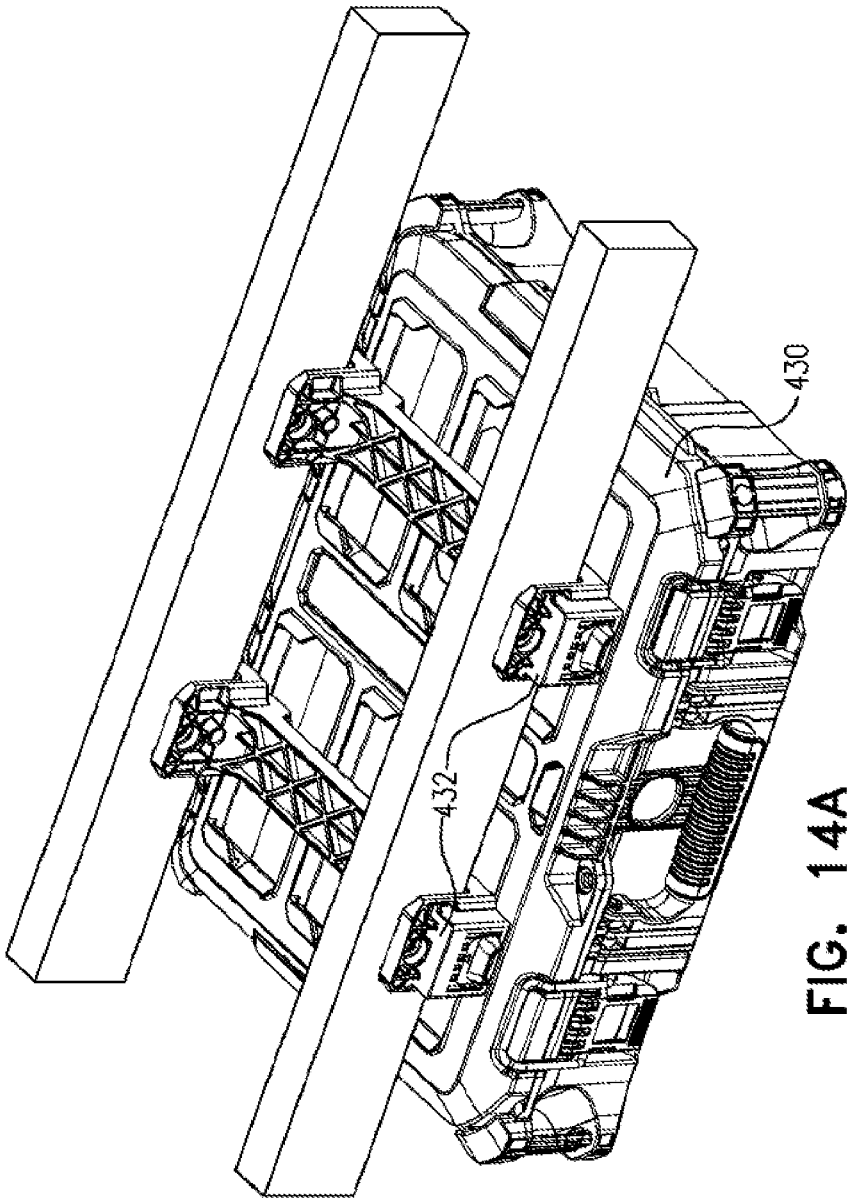

FIG. 14A

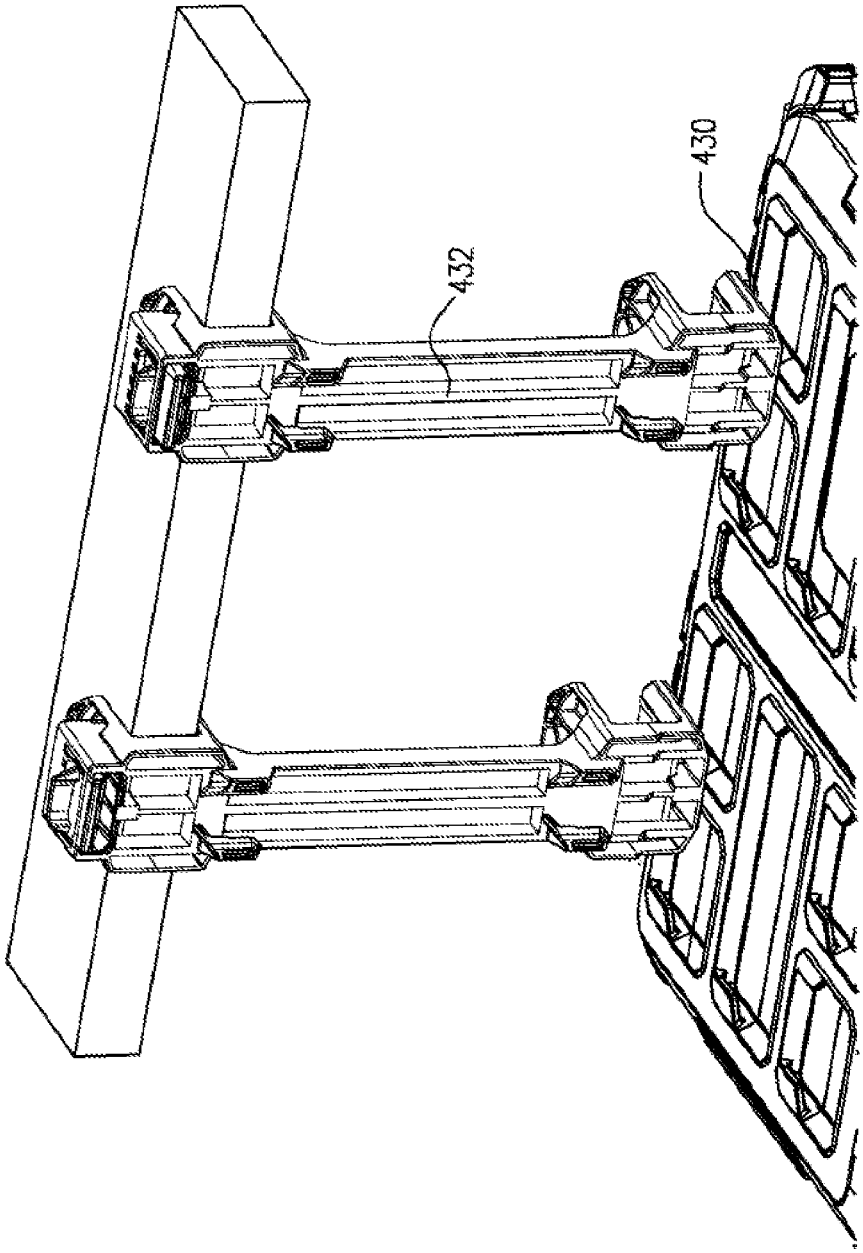

FIG. 14B

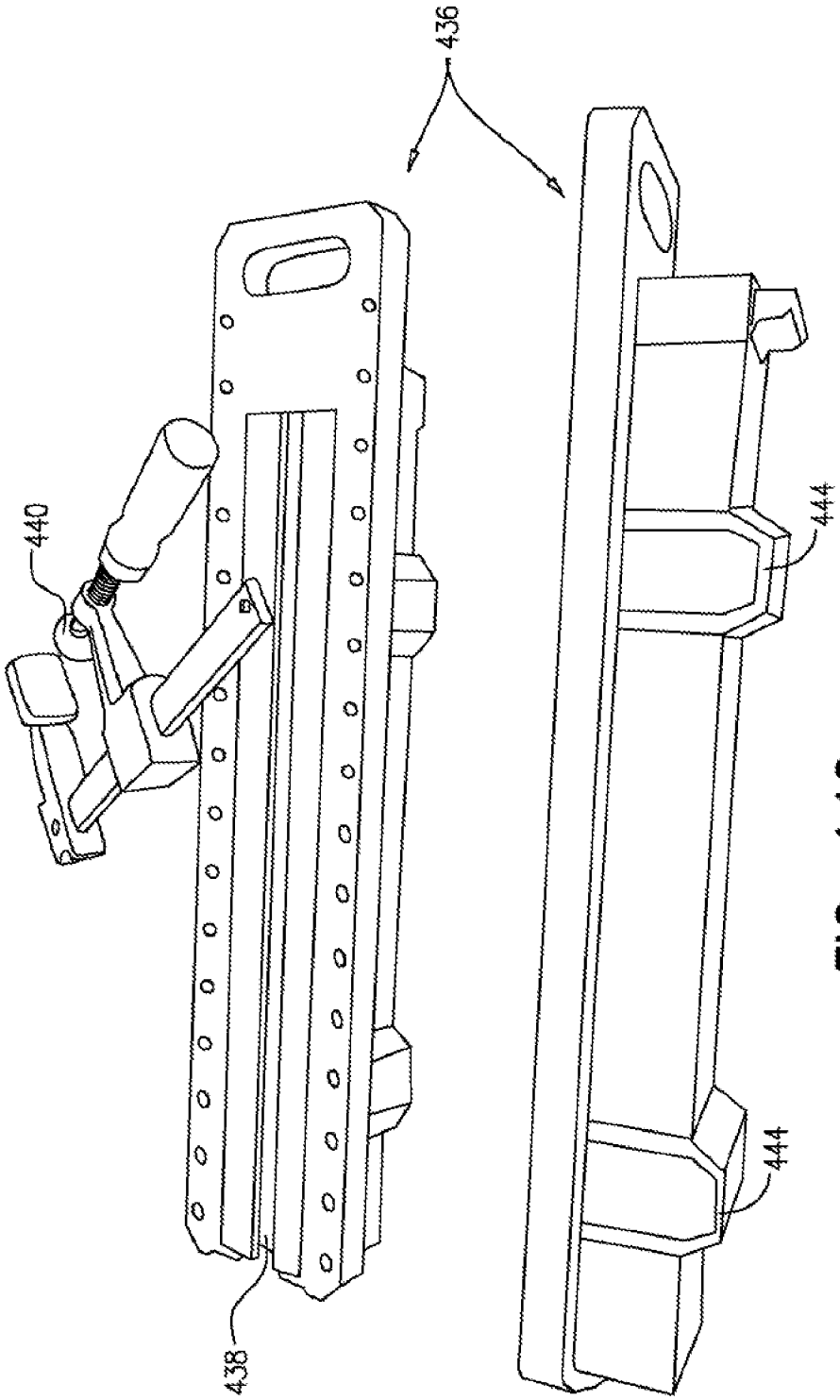

FIG. 14C

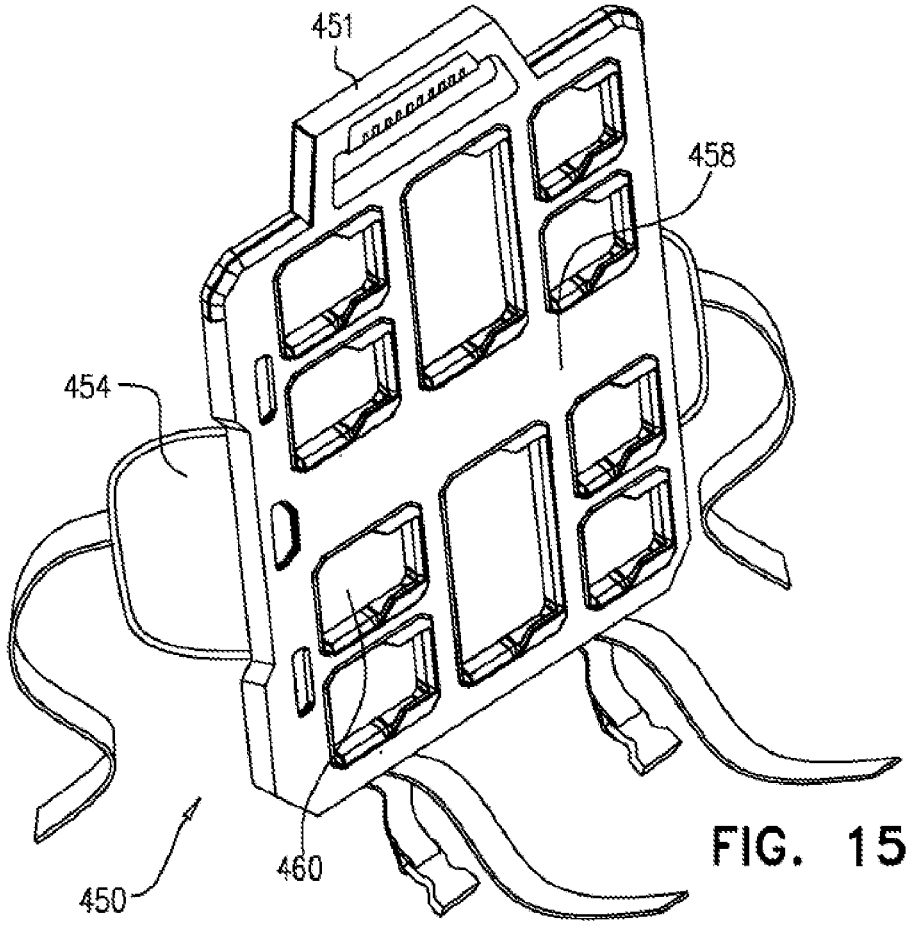

FIG. 15A

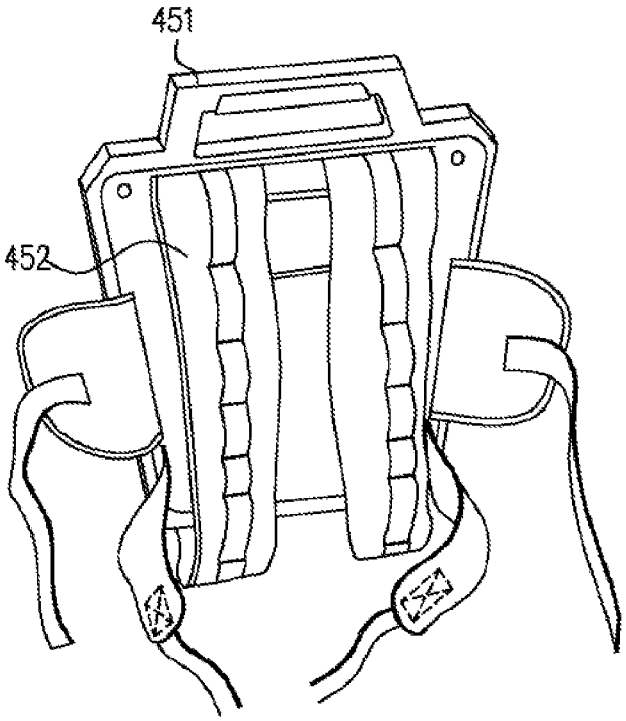

FIG. 15B

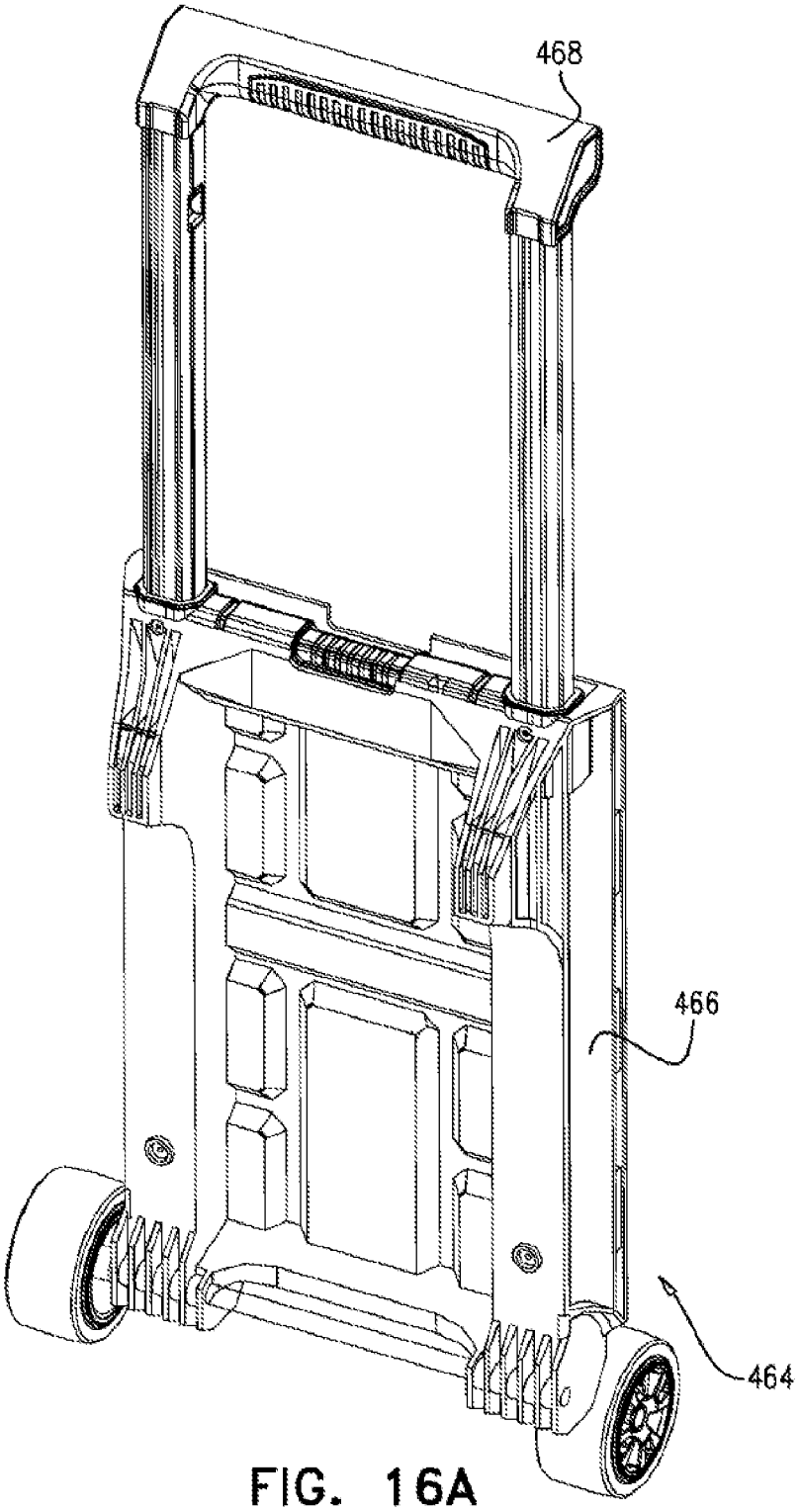

FIG. 16A

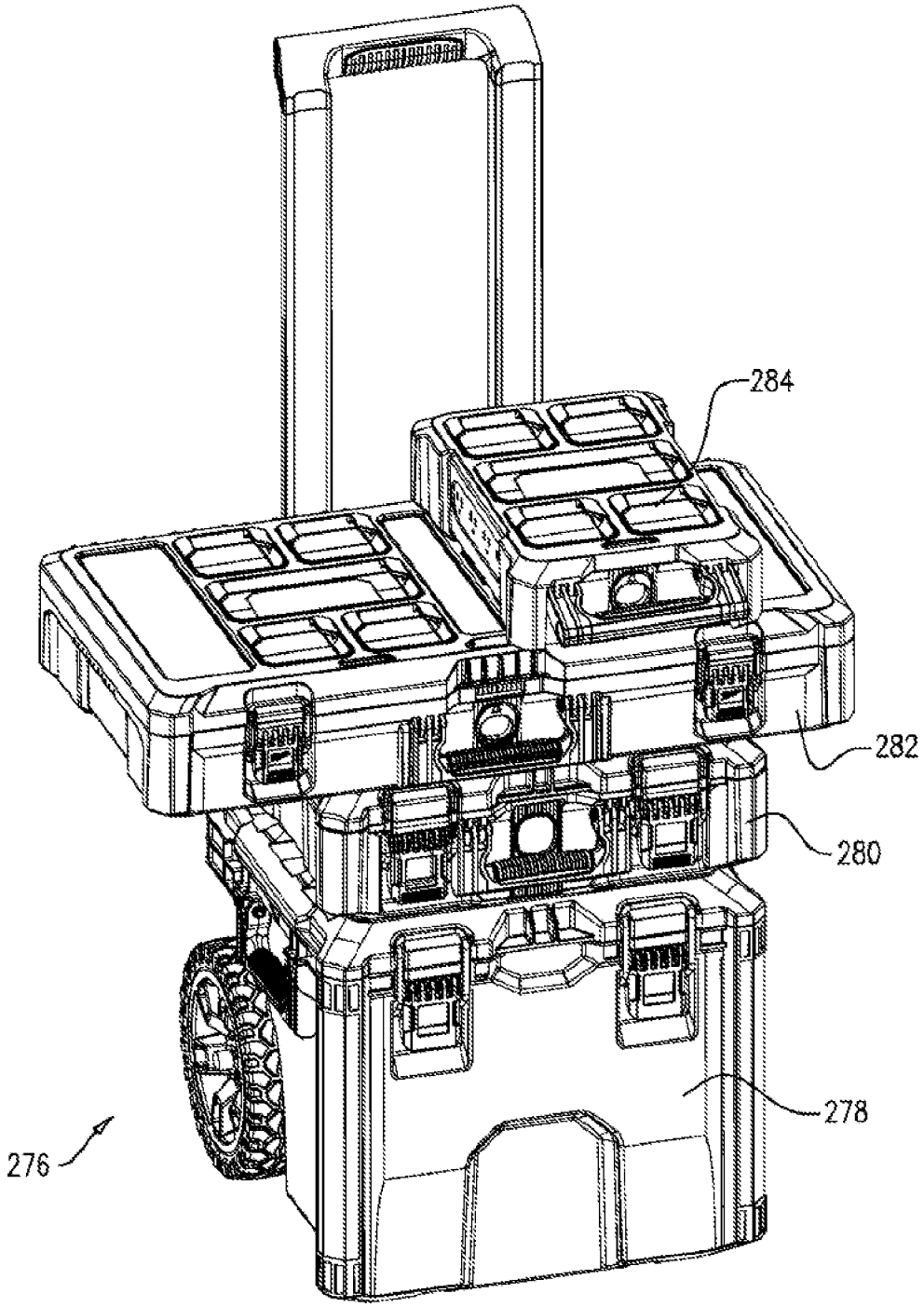

FIG. 16B

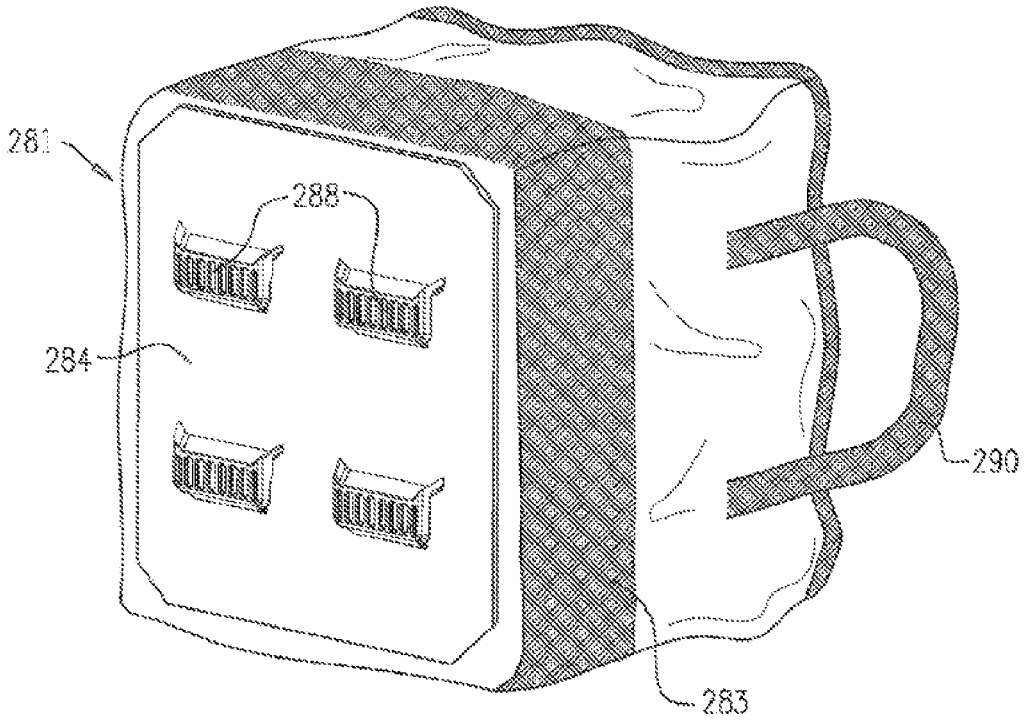

FIG. 17

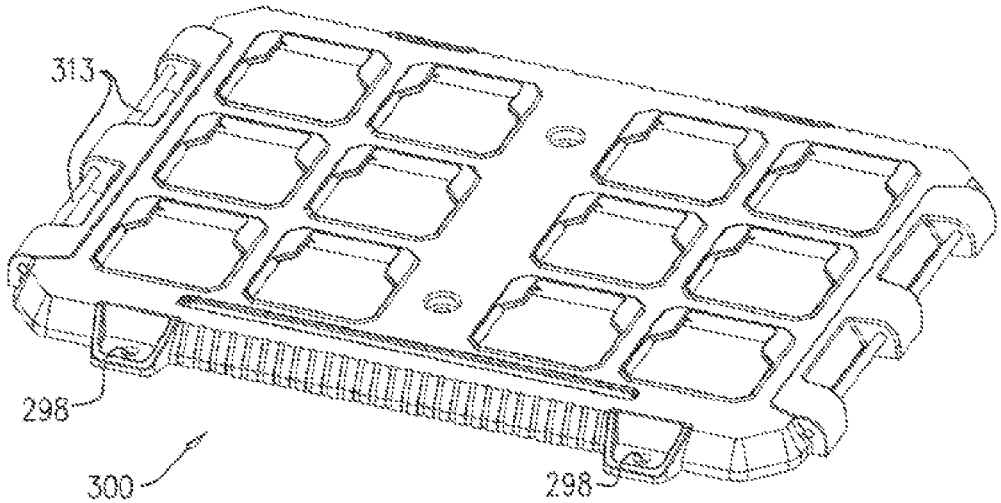

FIG. 18A

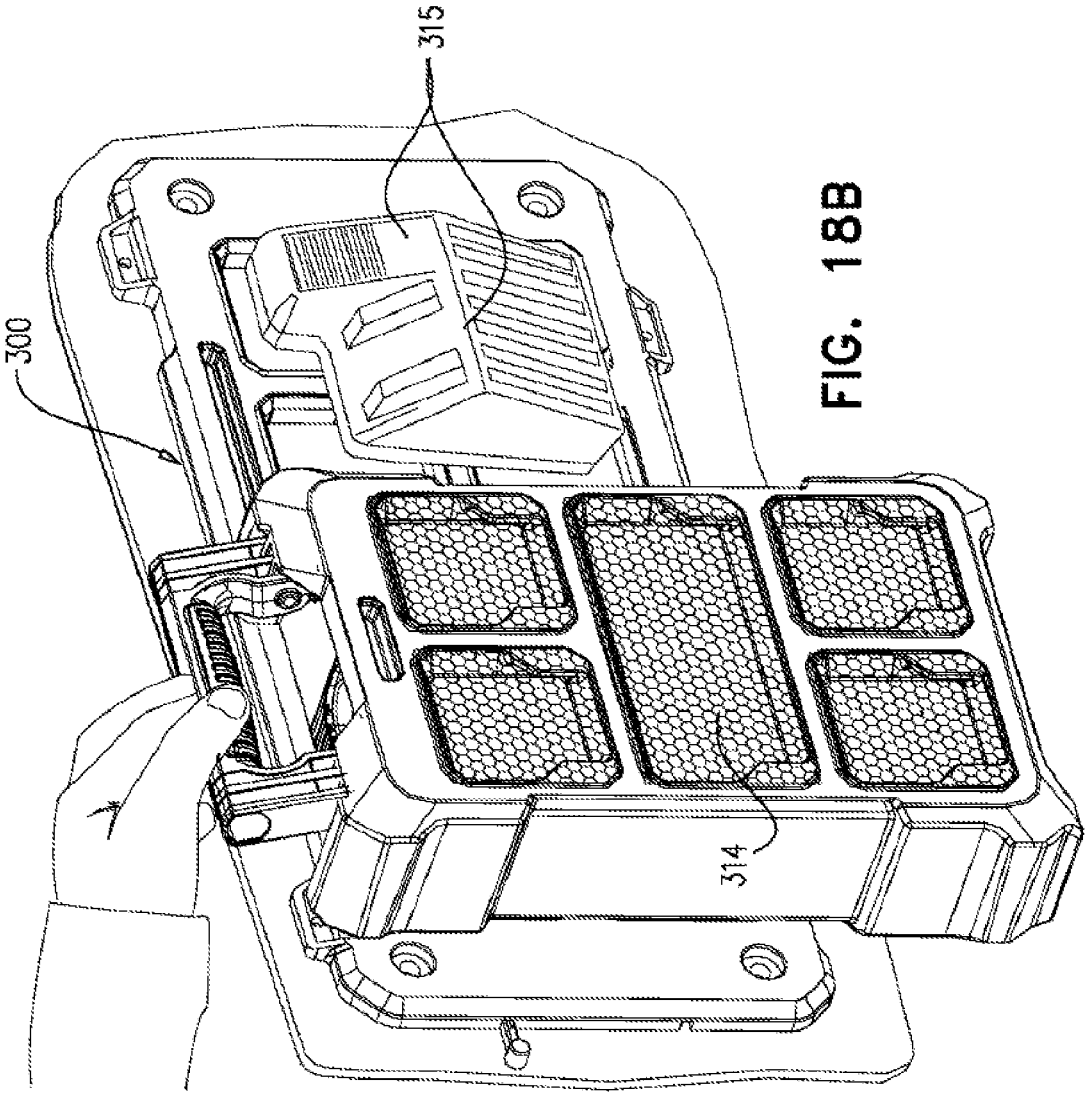

FIG. 18B

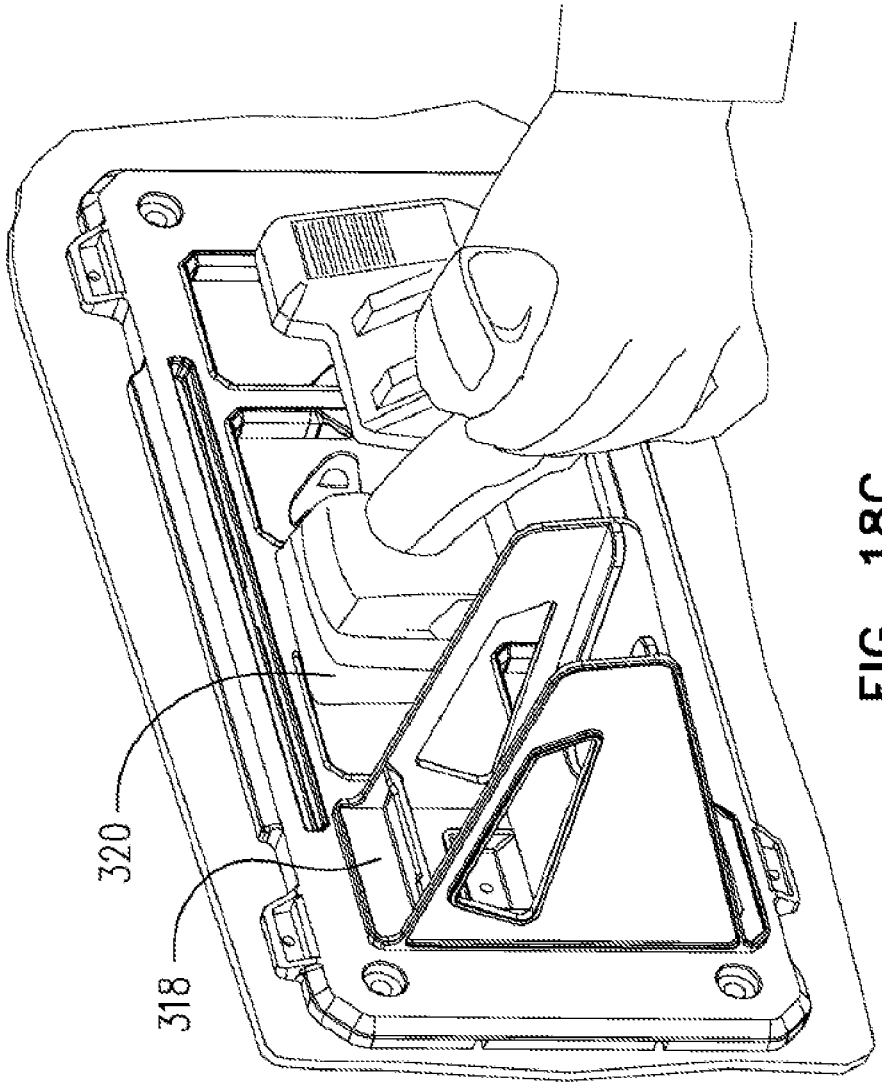

FIG. 18C

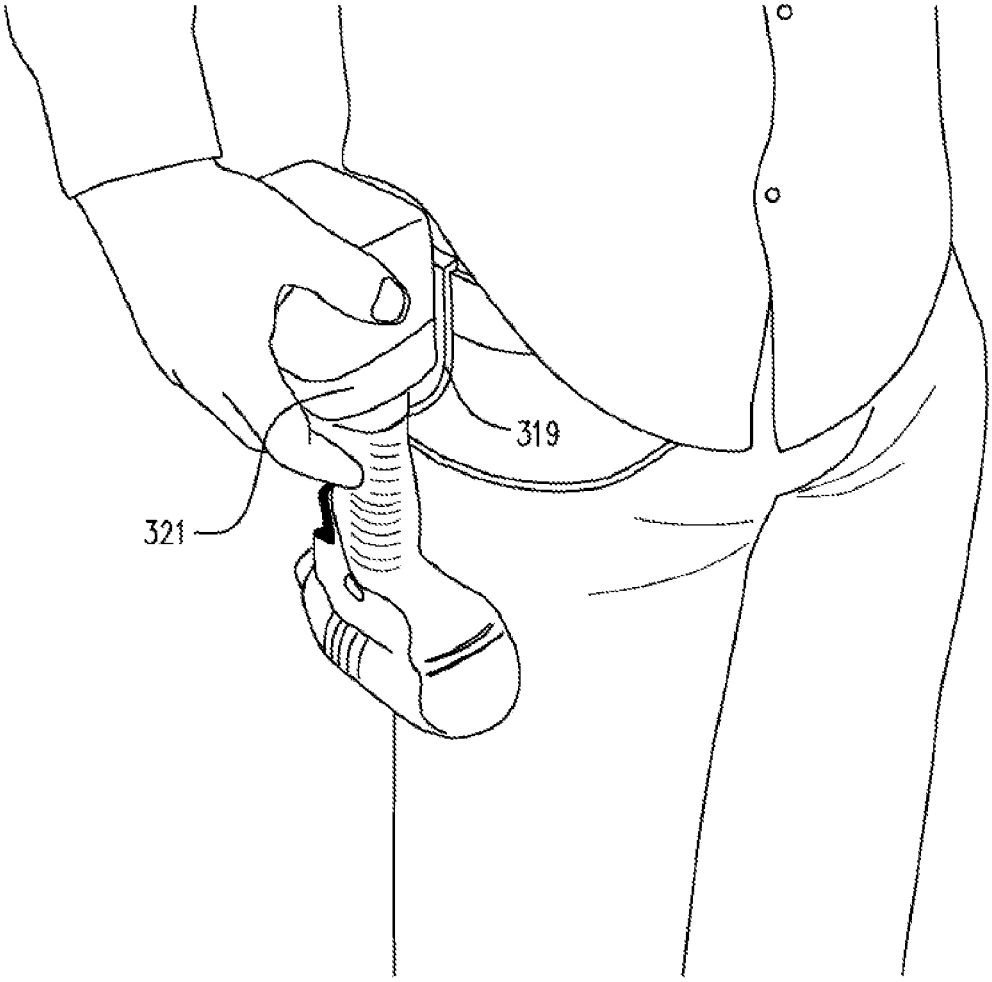

FIG. 19

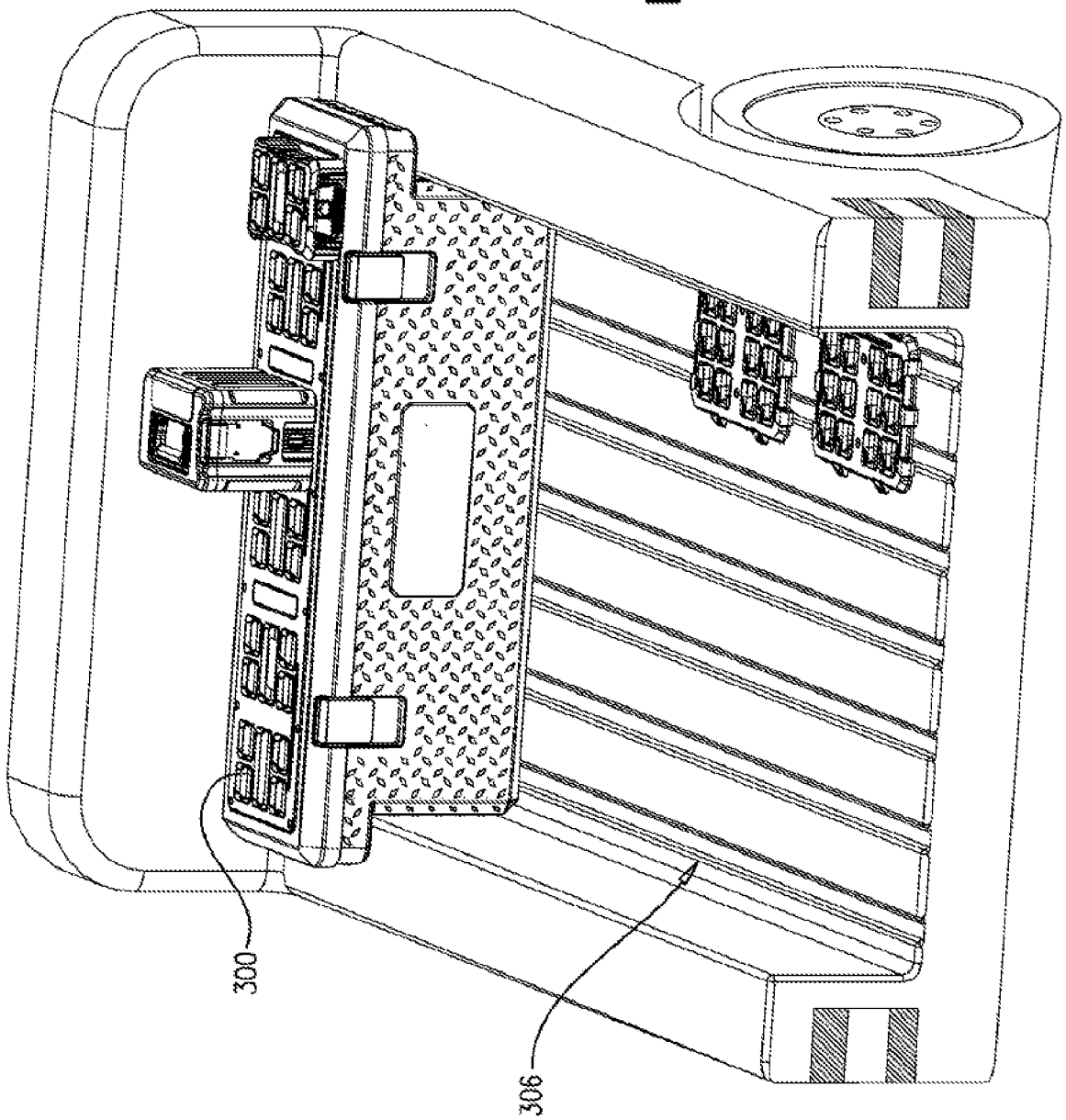

FIG. 20

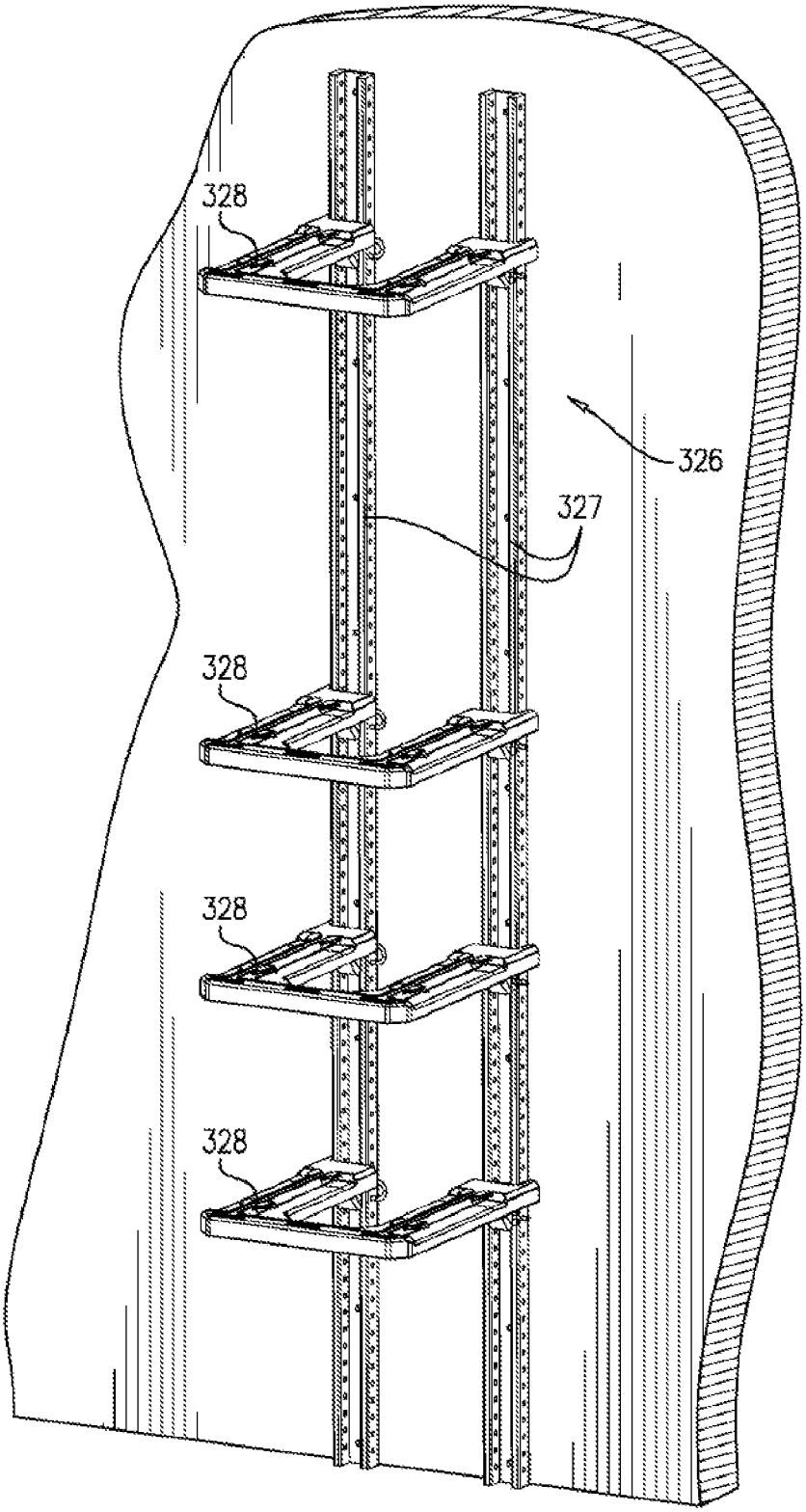

FIG. 21

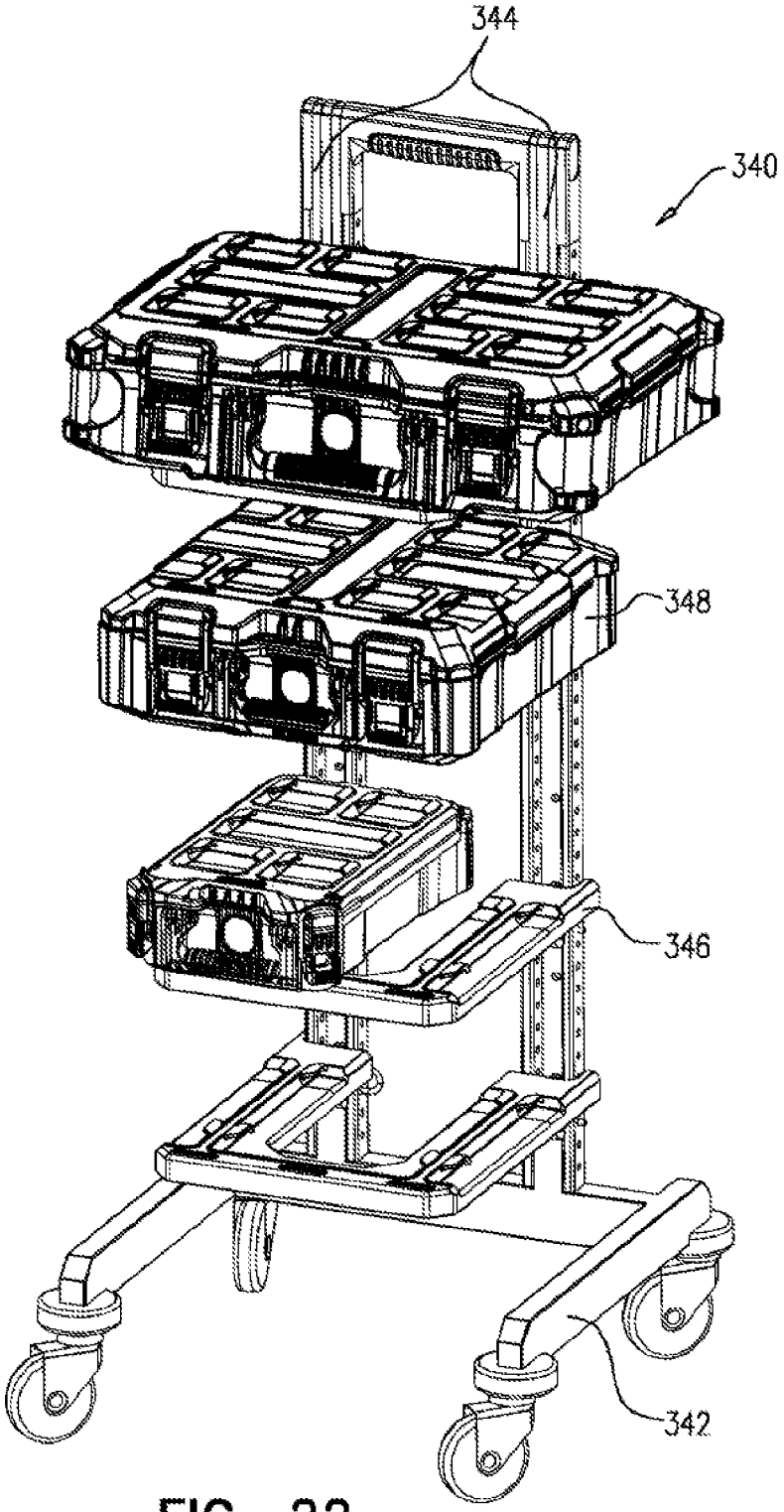

FIG. 22

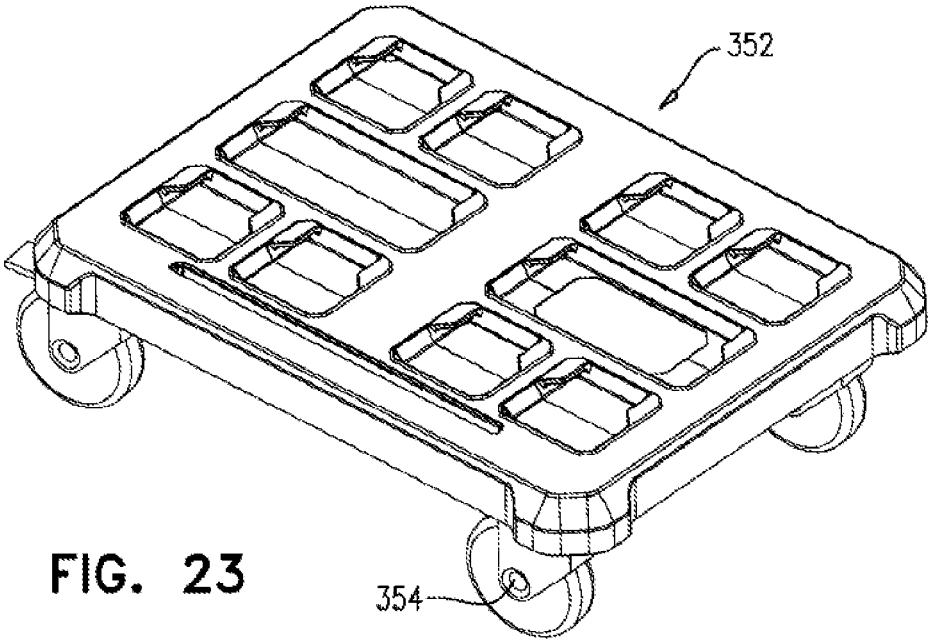

FIG. 23

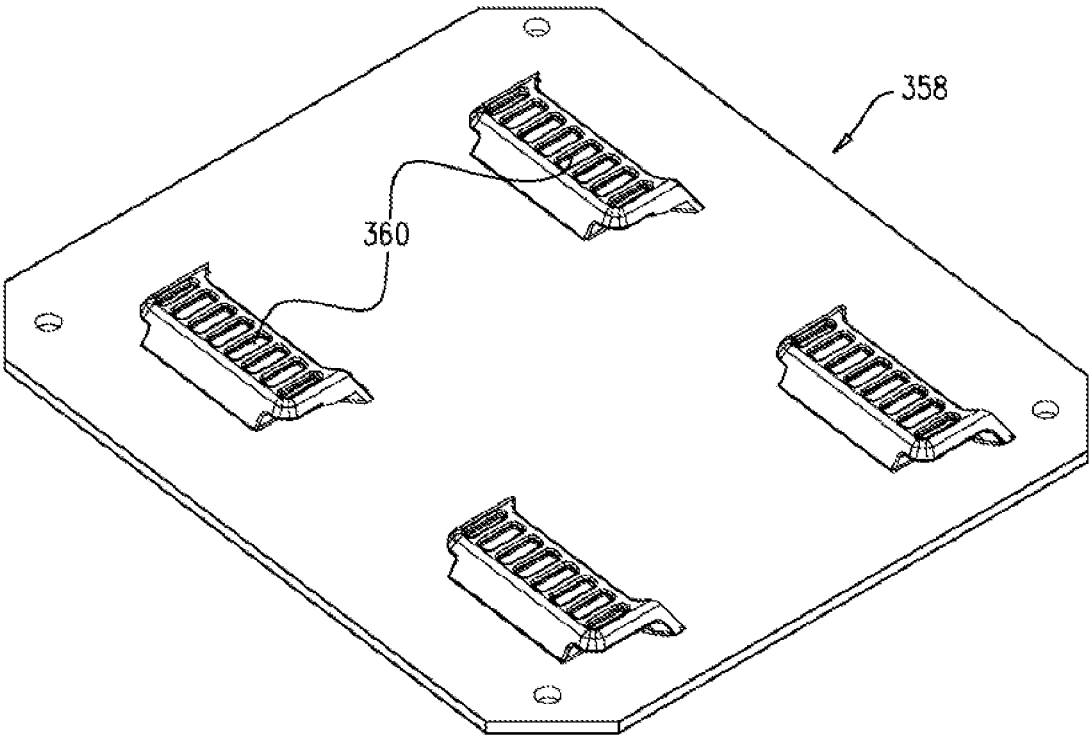

FIG. 24

UTILITY ASSEMBLY AND COUPLING MECHANISM

CROSS-REFERENCE TO RELATED PATENT APPLICATIONS

This application is a continuation of U.S. application Ser. No. 17/391,904, filed Aug. 2, 2021, which is a continuation of U.S. application Ser. No. 17/132,609, filed Dec. 23, 2020, which is a continuation of U.S. application Ser. No. 17/064,371, filed Oct. 6, 2020, which is a continuation of U.S. application Ser. No. 16/752,441, filed Jan. 24, 2020, now U.S. Pat. No. 11,008,136, which is a continuation of U.S. application Ser. No. 16/216,724, filed Dec. 11, 2018, now U.S. Pat. No. 10,583,962, which is a continuation of U.S. application Ser. No. 15/826,232, filed Nov. 29, 2017, now U.S. Pat. No. 10,703,534, which is a continuation of International Application No. PCT/IL2017/050481, filed Apr. 30, 2017, which claims priority to U.S. Provisional Application No. 62/459,076, filed Feb. 15, 2017 and to U.S. Provisional Application No. 62/330,334, filed May 2, 2016, each of which are incorporated herein by reference in their entireties.

TECHNOLOGICAL FIELD

The present disclosure is directed to a container assembly and more specifically to a utility assembly comprising two or more detachably attachable utility modules. The disclosure is further concerned with a coupling mechanism facilitating detachably attaching the utility modules to one another.

The term 'utility module' is used hereinafter in its broad meaning and is meant to denote a variety of articles such as, storage containers, travel luggage, tool boxes, organizers, compacted work benches, cable storage, tools (e.g. hand tools, power generators and power sources), communication modules, carrying platforms, locomotion platforms, etc., of any shape and size, and wherein any utility module can be detachably attached to any other utility module.

The term 'utility assembly' as used herein denotes any set of utility modules configured for articulation to one another, either as a stationary unit or locomotive.

General Description

A first aspect of the disclosure concerns a coupling mechanism configured for readily detachably attaching any first article to any second article, wherein any first article and any second article can be any utility module.

The coupling mechanism comprises a male coupler at a face of one of the first utility module and the second utility module, and a female coupler at a face of the other one of the first utility module and the second utility module, said female coupler has a depressed locking location configured with at least one locking rib extending above a depressed surface and along a sliding path, and having an open edge facing in a first sense; said male coupler has a projecting locking location disposed in register with said depressed locking location and configured with at least one locking tongue extending along said engaging sliding path at a second sense, opposite to said first sense, and configured for arresting engagement at a space between said locking rib and depressed surface, the coupling mechanism further comprises at least one locking member for arresting the first utility module with respect to said second utility module and preventing sliding displacement along said sliding path.

The arrangement is such that at a locked position of a utility assembly the at least one locking tongue of the male coupler engages below said at least one locking rib of the female coupler and the at least one locking member is engaged, thus preventing any respective displacement between the first utility module and the second utility module, and retaining the coupling mechanism at an engaged and locked position.

The term 'first utility module' as used herein denotes any utility module bearing at least one second utility module over a first surface thereof. The second utility module of a utility assembly may comprise three or more stages of utility modules, and functions as first utility module with respect to a third stage utility module mounted thereover and serving in turn as a second utility module.

According to certain embodiments, one or more female couplers are configured at the top face of the first utility module, and one or more male couplers are configured at the bottom face of the second utility module

The disclosed subject-matter is directed to a utility module configured with at least one of a male coupling mechanism and a female coupling mechanism of the disclosure, a module assembly comprising one or more utility modules of the aforementioned type and a set of utility modules of the aforementioned type.

According to a configuration of the first aspect, there is provide a utility assembly comprising at least a first utility module and at least a second utility module, and comprising a coupling mechanism configured between the first utility module and the second utility module; said coupling mechanism comprising at one of a top face of the first utility module and a bottom face of the second utility module one or more depressed locking locations each configured with a locking rib, and at least one locking latch arresting location; and the other one of said top face of the first utility module and a bottom face of the second utility module comprises one or more projecting portions each configured with a locking tongue disposed in register with said one or more depressed locking locations, and at least one locking latch disposed in register with said at least one locking latch arresting location.

The arrangement is such that, at a locked position, the bottom face of the second utility module at least partially rests over the top face of the first utility module, and the one or more projecting tongues are arrested by the corresponding one or more locking ribs, and the at least one locking latch is arrested by corresponding at least one locking latch arresting location, thereby preventing sliding displacement between the first utility module and the second utility module, and further wherein disengaging the second utility module from the first utility module is facilitated by disengaging the at least one locking latch from the at least one locking latch arresting location.

Locking engagement between the second utility module and the first utility module is obtained when the one or more depressed locking locations and the one or more projecting portions are disposed behind one another (though not necessarily aligned).

According to a particular configuration of the coupling mechanism, the one or more depressed locking locations and the one or more locking latch arresting locations are configured at the top face of the first utility module, and the one or more projecting portions and the at least one locking latch are configured at the bottom face of the second utility module. According to this configuration, locking between the first utility module and the second utility module is obtained by positioning the second utility module over the

second utility module such that one or more locking tongues of the projecting portions engages with one or more respective locking ribs of the depressed locking locations, and wherein the locking latch interlocks with the respective locking latch arresting location.

The arrangement being such that the attaching engagement between the second utility module and the first utility module takes place when the one or more locking tongues and the corresponding one or more respective locking ribs are engaged, thereby preventing vertical separation between the utility modules (i.e. preventing lifting of the second utility module of the first utility module), and further when the locking latch is arrested by the respective locking latch arresting location, thereby preventing sliding displacement of the utility modules one with respect to the other (i.e. sliding displacement of the second module over the first module).

Disengaging the second utility module from the first utility module can be facilitated only after disengaging the locking latch from said locking latch arresting location.

According to a second aspect of the disclosure there is disclosed a coupling mechanism for a utility assembly comprising at least a first utility module and at least a second utility module, said coupling mechanism is configured between the first utility module and the second utility module and comprises at one of a top face of the first utility module and a bottom face of the second utility module with at least one depressed locking location configured with a locking rib, and at least one locking latch arresting location; and the other one of said top face of the first utility module and a bottom face of the second utility module comprises at least one projecting portion with a locking tongue disposed in register with said at least one depressed locking location, and at least one locking latch disposed in register with said at least one locking latch arresting location; and wherein at a locked position the bottom face at least partially rests over the top face, and the at least one projecting tongue is arrested by the corresponding at least one locking rib and the at least one locking latch is arrested by corresponding at least one locking latch arresting location, and further wherein disengaging the second utility module from the first utility module is facilitated by disengaging the at least one locking latch from the at least one locking latch arresting location.

Engaging the first and second utility modules into the locked position is provided by sliding the second utility module with respect to the first utility module along a sliding path defined by at least one of said at least one locking rib and said at least one locking tongue.

According to one particular configuration the at least one locking rib extends substantially parallel to the sliding path and according to another configuration the at least one locking rib extends substantially perpendicular and intersects the sliding path. A third aspect of the present disclosure is directed to a utility module being a mobile carrier unit and comprising at least one carrier engagement surface, compatible for interlocking engagement in a detachable manner with a first engagement surface of a utility module.

The term carrier unit as used herein denotes any kind of propelled cart configured for detachably attaching and carrying load. The carrier unit may be a hand cart, a mobile tool cart, a mobile workshop, traveling luggage cart, a trolley, etc.

With particular reference to the third aspect, the carrier engagement surface can be larger than the utility module's first engagement surface corresponding with it. In this case, several utility modules may be interlocked simultaneously upon one carrier unit. According to one configuration there is disclosed a carrier unit comprising a manipulating arrangement, a locomotion system, and an engagement surface comprising one or more engaging elements. The carrier unit is designated for detachable interlocking engagement with one or more utility modules, each comprising a first engagement surface configured with one or more first engaging elements compatible for detachable interlocking engagement with the carrier engaging elements.

According to yet configuration there is disclosed an assembly comprising a carrier unit comprising an engagement surface comprising one or more engaging elements, and at least one utility module configured with at least one first engagement surface comprising one or more first engaging elements compatible for detachable interlocking engagement with the carrier unit's engaging elements.

According to a modification of this aspect, there is also provided a container unit comprising a top member configured with a second engagement surface of the utility module, said top member, according to one example constitutes a cover of the utility module.

The arrangement is such that a container unit can be readily and easily applied over and interlockingly articulated to a carrier unit, or over a utility module configured with a second engagement surface mimicking the first engagement surface second engagement surface mimicking the first engagement surface of the carrier unit.

Engagement between the carrier unit and the container, and further between two containers, is facilitated by any locking mechanism of the disclosure hereinabove and hereinafter.

According to a specific example, there is a latching mechanism, wherein the first engaging elements of the carrier unit are configured for interlocking engagement with engaging elements of the mating surface of the respective utility module. The latching mechanism may assume various configurations, e.g. male-female couplings, dovetail couplings, and the like. The arrangement being such that only a minor displacement is required in order to lockingly mount, and respectively detach, a utility module over the carrier unit.

According to one specific configuration, the detachable interlocking engagement mechanism between the carrier engaging elements and the utility module's first engaging elements is a dovetail engagement mechanism, comprising laterally projecting shoulders configured on one of the carrier engagement surfaces and the first engagement surface of a utility module, and a shoulder receiving recess configured on the other one of one of the carrier engagement surfaces and the first engagement surface of a utility module; where said laterally projecting shoulders are configured for sliding engagement with said shoulder receiving recess.

According to a particular configuration, one or both of the carrier engagement surfaces and the first engagement surface of a respective utility module are configured with depressions, each accommodating respective laterally projecting locking shoulders. Said dovetail engagement mechanism members constitute said engaging elements, wherein said carrier engaging elements comprise one of said dovetail engagement members, while the utility module's first engaging element comprises the respective said dovetail engagement member.

According to another configuration, the detachable interlocking engagement mechanism between the carrier engaging elements and the utility module's first engaging elements is an undercut engagement mechanism, comprising lateral projections configured on one of the carrier engagement surfaces and the first engagement surface of a container unit,

and a receiving recess configured on the other one of one of the carrier engagement surfaces and the first engagement surface of a utility module; where said lateral projections are configured for engagement with said receiving recess.

Interlocking engagement of the utility module and the carrier unit takes place by placing the first engagement surface of a utility module over the carrier engagement surface, such that the utility module's first engaging elements are disposed shifted over the respective carrier engaging elements of the carrier unit, and are then slidingly shifted to obtain sliding interlocking engagement therebetween.

The detachable interlocking engagement mechanism may further comprise a locking mechanism configured for preventing unintentional detaching of the slidingly engaging elements once they are fully interlocked, i.e. to prevent detaching of the utility module from the carrier unit or from another utility module.

According to one configuration, the locking mechanism, comprises a locking pin that is configured for snapingly protruding from one of the engagement surfaces into a designated nook on the other engagement surface. This prevents the engaging surfaces from sliding relatively to each other, and by that it prevents said engaging elements from being slidingly separated once interlocked.

According to one configuration, the carrier engagement surface of the carrier unit constitutes a top wall of the carrier unit, when the carrier unit is balanced horizontally to the ground, and wherein the utility module's first engagement surface constitutes a bottom wall of the container unit, when the utility module is balanced horizontally to the ground. The utility module can further comprise a second engagement surface constituting its top wall, or a cover, when the utility module is balanced horizontally to the ground. The second engagement surface of the utility module simulates the carrier engagement surface as it is compatible for engaging with another utility module's first engagement surface.

Any one or more of the following features, designs and configurations, can be implemented in a utility module, a utility assembly, locking mechanism, and the carrier unit and assembly according to the present disclosure, individually or in various combinations thereof:

A single locking rib can extend at rear end of a depressed locking location (i.e. the female coupler may comprise a single locking rib) and substantially perpendicular to the sliding path;

Two locking ribs can extend at side edges of a depressed locking location (i.e. the female coupler may comprise two locking ribs) and disposed substantially parallel to the sliding path;

Two locking ribs can each extend at a respective side edge of two neighboring depressed locking locations, said locking ribs disposed substantially parallel to the sliding path;

The utility assembly can be modular wherein a top face of a first utility module can interlock with a bottom face of a second utility module disposed thereover in a substantially fully overlapping relation, or with a bottom face of at least one second utility module only partially overlapping therewith;

A second utility module overlapping a significant portion of a first utility module can be configured with a single release latch for displacing several locking latches articulated therewith;

Two or more second utility modules can be mounted over a first utility module, each being independently detachable attachable over the first utility module;

The at least one second utility module is configured for snap-type locking over the first utility module;

A release latch for displacing the locking latch into disengagement from the locking latch arresting location can be disposed at a front face of the respective second utility module;

The at least one locking latch and the at least one locking latch arresting location can be disposed at a front portion of the respective utility modules;

At least one of the first utility module and the second utility module are configured with a gliding surface facilitating displacement and positioning the respective second utility module at the locking position with respect to the first utility module;

The gliding surface reduces tolerances between the projecting portion and the depressed locking location receiving same;

One or both of the locking tongue and locking rib can be configured with a slanting surface at corresponding orientation, along the sliding path, for reducing or substantially elimination tolerance therebetween;

One or both of a front edge of the projecting portion and a corresponding front edge of the depressed locking location can be slanted for gliding positioning of the second utility module into true locking position over the first utility module;

The locking latch can be configured for displacement in a direction substantially normal to a respective face of a utility module;

The locking latch can be spring biased and configured for normally projecting from a face of the respective first or second utility module;

The locking latch can be manipulable to be opened through an opening configured at a front wall of the respective utility module;

Corners of the utility modules can be reinforced;

One or more of the utility modules can be a container module, and the utility assembly can be a container assembly/tool caddy;

The container module can be compartmented and can be configured with sub-containers and sub-compartments;

The top face of the container module can be configured as a lid or as a functional component of the container module;

A lid of a second container can be opened also when articulated and locked in position over a first container;

A lid of a first container can be opened also when a second container is articulated and locked in position thereabove;

At least one of the container modules can be a locomoting container and can be configured with an arrangement for locomoting said container module. Where the locomoting container is attached to other container modules it can facilitate for locomoting the utility assembly;

The container modules can be configured with carrying arrangement disposed at any one or more of its faces. According to a particular configuration, a front face of the container modules is configured with a carrying handle and according to another configuration side faces of the container modules can be configured with a carrying handle;

Examples of utility modules can be any one or more of a cooler box, a workpiece grip, a power supply (e.g. power bank, generator), hand tools, power tools, a locomotive platform (e.g. a work dolly), powered or not, a tactical unit (e.g. military gear, scientific equipment, communications equipment, personal gear, outdoor gear, etc.);

A tool caddy can be configured with a carrying handle (e.g. telescopic);

A utility module can be a soft-shell container with at least a rigid face portion configured with a male/female coupler;

The utility module can be an interface coupling module, i.e. functions only as a coupling interface;

The interface coupling module can be attached to a surface of any element or object and by different arrangements, fixedly or detachably;

The interface coupling module can be a cargo interface module for a utility vehicle, so as to attach one or more utility modules to the vehicle;

The cargo interface module can be a bed cargo module, a roof rack module, etc.;

The interface coupling module can be a surface mount for attaching utility modules, e.g. a floor mount, wall mount, wall rack, etc.;

The interface coupling module can be a tool mount/rack;

The interface coupling module can be belt mount for mounting of utility modules (e.g. a hand tool) to a workers belt;

The interface coupling module can be an interface mount module for coupling two utility modules to one another, e.g. for articulating two utility modules, both configured with a similar male coupler or a female coupler, and wherein the interface mount module is configured at both faces with another of male coupler or a female coupler;

The interface coupling module can be a back pack carrying module, for facilitating attachment and carrying of utility modules;

A top face of a utility module can be configured with a carrying handle, said carrying handle displaceable between a stowed position and a carrying position, wherein at the stowed position said carrying handle at least partially extends within a niche and does not to interfere with the coupling mechanism;

The carrier unit may include one or more auxiliary engagement surfaces positioned on an exterior face of the carrier unit. For example, an auxiliary engagement surface can be configured at a bottom face of the carrier unit;

The carrier unit may include a second engagement surface simulating/mimicking the first engagement surface of the utility module;

A utility module may be configured with one or more auxiliary first and second engagement surfaces;

The carrier engagement surface may be a connectivity platform detachably attached to the exterior surface of the carrier unit, facilitating a cart unit or a carrier unit according to the present disclosure;

One or both of the utility module's first and second engagement surfaces may be detachably attached to an exterior surface of the utility module;

The carrier engagement surface and the utility module's first engagement surface may be like elements;

The utility module's first and second engagement surfaces may be like elements;

The carrier unit's engaging elements and the utility module's first engaging elements may be similar elements;

One engagement surface may include several engaging elements and one locking mechanism;

The coupling mechanism is configured for spontaneous displacement into locking engagement within a locking receptacle, wherein manual interference is required only for unlocking the locking mechanism and detaching a utility module from a respective utility module or carrier unit;

The coupling mechanism can be a spring biased locking pin, normally projecting from a respective engagement surface;

One or both of the carrier unit and the utility module may further include a locking mechanism designated to prevent unintentional separation of the engagement surfaces while they are interlocked;

The locking mechanism is manipulable between an unlocked position in which said engagement surfaces may slide upon each other, and a locked state in which the engagement surfaces may not slide upon each other;

The locking mechanism may be configured with a biasing mechanism for snap arresting at least at its locked state;

The locking mechanism may be configured with a manually operated activating portion for switching between said unlocked and locked positions.

The carrier unit may be assembled together with other carrier units the same way it's assembled with the utility modules;

The locomotion system of the carrier unit may comprise a wheel system (e.g. axially fixed roller wheels, swivel wheels, etc.), a sliding platform, caterpillar tracks, etc;

The locomotion system of the carrier unit comprises, according to a particular example, several fixed axis wheels, wherein the perimeter of said wheels is tangent with a base edge of the carrier unit;

At an assembled configuration, where one or more utility modules are attached to the carrier unit, the assembly can be positioned vertically wherein a side face of the one or more containers rest over a supporting surface. According to a particular example, at this position the carrier unit and container assembly are configured with stability members for retaining their stability while positioned vertically to the ground;

The carrier unit may be stable while positioned horizontally to the ground, by a support system projecting from a bottom face thereof. The support system may comprise friction enhancing surfaces to restrict displacement of the assembly while placed over a bearing surface;

The carrier unit may be foldable to a more compact configuration;

The carrier unit may comprise an external storage box detachably interconnectable to its exterior walls;

The carrier unit may comprise a power supply detachably interconnectable to its exterior walls;

The carrier unit's transporting system may be motorized while powered via said power supply;

The carrier unit may further include a locking mechanism to insure interlocking connection of the engagement surfaces;

The container unit may comprise non-rigid portions;

The carrier unit may comprise at least one manipulating arrangement, configurable between a stowed position in which the manipulating arrangement is retracted, and a manipulating position in which the manipulating arrangement is extracted. The manipulating arrangement may be a telescopic or foldable handle;

The manipulating arrangement may be a gripping handle, a D-grip handle, a T-grip handle, a flexible strap, etc.

Embodiments

The present disclosure also encompasses embodiment as defined in the following numbered phrases. It should be noted that these numbered embodiments intended to add to this disclosure and is not intended in any way to be limiting.

1. A coupling mechanism configured for readily detachably attaching a first utility module to a second utility module, the coupling mechanism comprising a male coupler at a face of one of the first utility module and the second

utility module, and a female coupler at a face of the other one of the first utility module and the second utility module, said female coupler having a depressed locking location configured with at least one locking rib extending above a depressed surface and along a sliding path, and having an open edge facing in a first sense; said male coupler having a projecting locking location disposed in register with said depressed locking location and configured with at least one locking tongue extending along said engaging sliding path at a second sense, opposite to said first sense, and configured for arresting engagement at a space between said locking rib and depressed surface, the coupling mechanism further comprises at least one locking member for arresting the first utility module with respect to said second utility module and preventing sliding displacement along said sliding path.

2. The coupling mechanism of embodiment 1, wherein said female coupler is configured at the top face of the first utility module, and the male coupler is configured at the bottom face of the second utility module.

3. The coupling arrangement of embodiment 1 or 2, wherein the at least one locking rib extends substantially parallel to the sliding path.

4. The coupling arrangement of embodiment 1 or 2, wherein the at least one locking rib extends substantially perpendicular and intersects the sliding path.

5. The coupling arrangement of embodiment 1 or 2, wherein the female coupler comprises a single locking rib extends at rear end of a depressed locking location and substantially perpendicular to the sliding path.

6. The coupling arrangement of embodiment 1 or 2, wherein the female coupler comprises two locking ribs extend at side edges of a depressed locking location and disposed substantially parallel to the sliding path.

7. The coupling arrangement of embodiment 1 or 2, wherein the female coupler comprises two locking ribs each extend at a respective side edge of two neighboring depressed locking locations, said locking ribs disposed substantially parallel to the sliding path.

8. A coupling mechanism for a utility assembly that comprises at least a first utility module and at least a second utility module, said coupling mechanism is configured between the first utility module and the second utility module; one of a top face of the first utility module and a bottom face of the second utility module comprises at least one depressed locking location configured with a locking rib, and at least one locking latch arresting location; and the other one of said top face of the first utility module and a bottom face of the second utility module comprises at least one projecting portion with a locking tongue disposed in register with said at least one depressed locking location, and at least one locking latch disposed in register with said at least one locking latch arresting location; and wherein at a locked position the bottom face at least partially rests over the top face, and the at least one projecting tongue is arrested by the corresponding at least one locking rib and the at least one locking latch is arrested by corresponding at least one locking latch arresting location, and further wherein disengaging the second utility module from the first utility module is facilitated by disengaging the at least one locking latch from the at least one locking latch arresting location, such that engaging the first and second utility modules into the locked position is provided by sliding the second utility module with respect to the first utility module along a sliding path defined by at least one of said at least one locking rib and said at least one locking tongue.

9. The coupling arrangement of embodiment 8, wherein the at least one locking rib extends substantially parallel to the sliding path.

10. The coupling arrangement of embodiment 8, wherein the at least one locking rib extends substantially perpendicular and intersects the sliding path.

11. The coupling arrangement of embodiment 8, wherein a single locking rib extends at rear end of a depressed locking location and substantially perpendicular to the sliding path.

12. The coupling arrangement of embodiment 8, wherein two locking ribs extend at side edges of a depressed locking location and disposed substantially parallel to the sliding path.

13. The coupling arrangement of embodiment 8, wherein two locking ribs each extend at a respective side edge of two neighboring depressed locking locations, said locking ribs disposed substantially parallel to the sliding path.

14. The coupling arrangement of any one of embodiments 8 to 13, further comprising a release latch for displacing the locking latch into disengagement from the locking latch arresting location can be disposed at a front face of the respective second utility module.

15. The coupling arrangement of any one of embodiments 8 to 14, wherein the at least one locking latch and the at least one locking latch arresting location are disposed at a front portion of the respective utility modules.

16. The coupling arrangement of any one of embodiments 8 to 15, wherein the locking latch is configured for displacement in a direction substantially normal to a respective face of a utility module.

17. The coupling arrangement of any one of embodiments 8 to 16, wherein locking latch is spring biased and configured for normally projecting from a face of the respective first or second utility module.

18. The coupling arrangement of any one of embodiments 8 to 17, wherein the locking latch is manipulable to be opened through an opening configured at a front wall of the respective utility module.

19. The coupling arrangement of any one of embodiments 1 to 18, wherein one or both of the locking tongue and locking rib are configured with a slanting surface at corresponding orientation along the sliding path.

20. The coupling arrangement of any one of embodiments 1 to 19, wherein one or both of a front edge of the projecting portion (or the projecting locking location) and a corresponding front edge of the depressed locking location are slanted for gliding positioning of the second utility module into locking position over the first utility module.

21. The coupling mechanism of any one of embodiments 1 to 20, wherein the first utility module is configured for detachably attaching one or more second utility modules thereto.

22. A coupling mechanism for a utility assembly comprising at least a first utility module and at least a second utility module, said coupling mechanism is configured between the first utility module and the second utility module and comprises at one of a top face of the first utility module and a bottom face of the second utility module with at least one depressed locking location configured with a locking rib, and at least one locking latch arresting location; and the other one of said top face of the first utility module and a bottom face of the second utility module comprises at least one projecting portion with a locking tongue disposed in register with said at least one depressed locking location, and at least one locking latch disposed in register with said at least one locking latch arresting location; and wherein at

a locked position the bottom face at least partially rests over the top face, and the at least one projecting tongue is arrested by the corresponding at least one locking rib and the at least one locking latch is arrested by corresponding at least one locking latch arresting location, and further wherein disengaging the second utility module from the first utility module is facilitated by disengaging the at least one locking latch from the at least one locking latch arresting location.

23. A utility assembly comprising at least a first utility module and at least a second utility module, and comprising a coupling mechanism according to any one of embodiments 1 to 21, the coupling mechanism being configured between the first utility module and the second utility module.

24. A utility assembly comprising at least a first utility module and at least a second utility module, and comprising a coupling mechanism for readily detachably attaching the first and second utility modules, the coupling mechanism being configured between the first utility module and the second utility module; said coupling mechanism comprising at one of a top face of the first utility module and a bottom face of the second utility module one or more depressed locking locations each configured with a locking rib, and at least one locking latch arresting location; and the other one of said top face of the first utility module and a bottom face of the second utility module comprises one or more projecting portions each configured with a locking tongue disposed in register with said one or more depressed locking locations, and at least one locking latch disposed in register with said at least one locking latch arresting location; such that at a locked position, the bottom face of the second utility module at least partially rests over the top face of the first utility module, and the one or more projecting tongues are arrested by the corresponding one or more locking ribs, and the at least one locking latch is arrested by corresponding at least one locking latch arresting location, thereby preventing sliding displacement between the first utility module and the second utility module, and disengaging the second utility module from the first utility module is facilitated by disengaging the at least one locking latch from the at least one locking latch arresting location.

25. The utility assembly of embodiment 24, wherein the first and second utility modules are in a locking engagement when said one or more depressed locking locations and the one or more projecting portions are disposed behind one another.

26. The utility assembly of embodiment 24 or 25, wherein said one or more depressed locking locations and said one or more locking latch arresting locations are configured at the top face of the first utility module, and the one or more projecting portions and the at least one locking latch are configured at the bottom face of the second utility module.

27. The utility assembly of any one of embodiments 24 to 26, wherein at least one second utility module is configured for snap-type locking over the first utility module.

28. The utility assembly of any one of embodiments 24 to 27 wherein engaging the first and second utility modules into the locked position is provided by sliding the second utility module with respect to the first utility module along a sliding path defined by at least one of said at least one locking rib and said at least one locking tongue.

29. The utility assembly of any one of embodiments 24 to 28, wherein the at least one locking rib extends substantially parallel to the sliding path.

30. The utility assembly of embodiment 29, wherein the at least one locking rib extends substantially perpendicular and intersects the sliding path.

31. The utility assembly of embodiment 29, wherein a single locking rib extends at rear end of a depressed locking location and substantially perpendicular to the sliding path.

32. The utility assembly of embodiment 29 wherein two locking ribs extend at side edges of a depressed locking location and disposed substantially parallel to the sliding path.

33. The utility assembly of embodiment 29, wherein two locking ribs each extend at a respective side edge of two neighboring depressed locking locations, said locking ribs disposed substantially parallel to the sliding path.

34. The utility assembly of any one of embodiments 24 to 33, wherein a top face of a first utility module interlocks with a bottom face of a second utility module disposed thereover in a substantially fully overlapping relation, or with a bottom face of at least one second utility module only partially overlapping therewith.

35. The utility assembly of any one of embodiments 24 to 33, wherein the second utility module overlaps a significant portion of a first utility module and is configured with a single release latch for displacing several locking latches articulated therewith.

36. The utility assembly of any one of embodiments 24 to 35, further comprising a release latch for displacing the locking latch into disengagement from the locking latch arresting location can be disposed at a front face of the respective second utility module.

37. The utility assembly of any one of embodiments 24 to 36, wherein the locking latch is configured for displacement in a direction substantially normal to a respective face of a utility module.

38. The utility assembly of any one of embodiments 24 to 37, wherein the locking latch is spring biased and configured for normally projecting from a face of the respective first or second utility module.

39. The utility assembly of any one of embodiments 24 to 38, wherein two or more second utility modules can be mounted over a first utility module, each being independently detachable attachable over the first utility module.

40. The utility assembly of any one of embodiments 24 to 39, wherein at least one of the first utility module and the second utility module are configured with a gliding surface facilitating displacement and positioning the respective second utility module at the locking position with respect to the first utility module.

41. The utility assembly of any one of embodiments 24 to 40, wherein one or more of the utility modules is a container module, and the utility assembly is a container assembly or a tool caddy.

42. The utility assembly of embodiment 41, wherein the container module is compartmented and optionally configured with sub-containers and sub-compartments.

43. The utility assembly of embodiment 41 or 42, wherein a top face of the container module is configured as a lid or as a functional component of the container module.

44. The utility assembly of any one of embodiments 41 to 43, wherein the container modules is a locomoting container, configured with an arrangement for locomoting said utility assembly.

45. The utility assembly of any one of embodiments 41 to 44, wherein the container modules is configured with a carrying arrangement disposed at any one or more of its faces, optionally being a carrying handle.

46. The utility assembly of any one of embodiments 24 to 40, wherein one or more of the utility modules is a soft-shell container with at least a rigid face portion.

47. The utility assembly of any one of embodiments 24 to 40, wherein said first utility module is a mobile carrier unit.

48. The utility assembly of any one of embodiments 24 to 47, further comprising a locking mechanism for preventing unintentional separation of the modules while they are interlocked.

49. The utility assembly of any one of embodiments 24 to 48, wherein the first utility module is configured for detachably attaching at least two second utility modules thereto.

50. A mobile carrier unit comprising at least one carrier engagement surface, compatible for interlocking engagement in a detachable manner with a first engagement surface of a utility module, said carrier engagement surface having (i) one or more depressed locking locations each configured with a locking rib and at least one locking latch arresting location, configured for engagement with said first engagement surface of a utility module that comprises at least one locking latch and one or more projecting portions, each projecting portion being configured with a locking tongue, or (ii) at least one locking latch and one or more projecting portions each configured with a locking tongue for engagement with said first engagement surface of a utility module that comprises one or more depressed locking locations, each depressed locking locations configured with a locking rib and at least one locking latch arresting location.

51. The mobile carrier unit of embodiment 50, wherein once associated with the utility module, said locking tongue becomes disposed in register with said one or more depressed locking locations, and at least one locking latch become disposed in register with said at least one locking latch arresting location.

52. The mobile carrier unit of embodiment 50 or 51, configured for detachable interlocking engagement with one or more utility modules, each utility module comprising a first engagement surface.

53. The mobile carrier unit of any one of embodiments 50 to 52, further comprising at least one of a manipulating arrangement and a locomotion system.

54. An assembly comprising a mobile carrier unit of any one of embodiments 50 to 53 having at least one carrier engagement surface, and at a least one utility module having a first engagement surface, the utility module being detachably interlocked with the mobile carrier unit by engaging said first engagement surface with said carrier engagement surface.

55. The assembly of embodiment 54, wherein the mobile carrier unit and the at least one utility module are detachably interlocked with one another by a dovetail engagement mechanism, that comprises laterally projecting shoulders configured on one of the carrier engagement surfaces and the first engagement surface of a utility module, and a shoulder receiving recess configured on the other one of one of the carrier engagement surfaces and the first engagement surface of a utility module; where said laterally projecting shoulders are configured for sliding engagement with said shoulder receiving recess.

56. The assembly of embodiment 55, wherein one or both of the carrier engagement surfaces and the first engagement surface of a respective utility module are configured with depressions, each accommodating respective laterally projecting locking shoulders.

57. The assembly of embodiment 54, wherein the mobile carrier unit and the at least one utility module are detachably interlocked with one another by an undercut engagement mechanism, comprising lateral projections configured on one of the carrier engagement surfaces and the first engagement surface of a container unit, and a receiving recess configured on the other one of one of the carrier engagement surfaces and the first engagement surface of a utility module; where said lateral projections are configured for engagement with said receiving recess, such that interlocking engagement of the utility module and the carrier unit takes place by placing the first engagement surface of a utility module over the carrier engagement surface, such that the utility module's first engaging elements are disposed shifted over the respective carrier engaging elements of the carrier unit, and are then slidingly shifted to obtain sliding interlocking engagement therebetween.

58. The assembly of any one of embodiments 54 to 57, further comprising a locking mechanism configured for preventing unintentional detaching of the utility module from the carrier unit.

59. The assembly of embodiment 58, wherein the locking mechanism comprises a locking pin that is configured for snapingly protruding from one of the engagement surfaces into a designated nook on the other engagement surface.

60. An interface coupling module comprising at least one engagement surface, compatible for interlocking engagement in a detachable manner with a first engagement surface of a utility module, said interface coupling module comprising an engagement surface having (i) one or more depressed locking locations each configured with a locking rib and at least one locking latch arresting location, configured for engagement with said first engagement surface of a utility module that comprises at least one locking latch and one or more projecting portions, each projecting portion being configured with a locking tongue, or (ii) at least one locking latch and one or more projecting portions each configured with a locking tongue for engagement with said first engagement surface of a utility module that comprises one or more depressed locking locations, each depressed locking locations configured with a locking rib and at least one locking latch arresting location

61. The interface coupling module of embodiment 60, being configured for detachable or fixed attachment to a surface of an object.

62. The interface coupling module of embodiment 60 or 61, being a cargo interface module for a utility vehicle configured for attaching one or more utility modules to the vehicle.

63. The interface module of embodiment 60 or 61, being a surface mount for attaching utility modules

64. The interface module of embodiment 60 or 61, being a tool mount or a tool rack.

65. The interface module of embodiment 60 or 61, being a belt mount for mounting of utility modules to a workers belt;

66. The interface module of embodiment 60 or 61, being an interface mount module for coupling two utility modules to one another.

BRIEF DESCRIPTION OF THE DRAWINGS

In order to better understand the subject matter that is disclosed herein and to exemplify how it may be carried out in practice, embodiments will now be described, by way of non-limiting examples only, with reference to the accompanying drawings, in which: FIGS. **1**A to **6**G are directed to a first example of a locking mechanism, wherein:

FIG. **1**A is a top perspective view of a container assembly according to an example of the present disclosure;

FIG. **1**B is an exploded perspective view of the container assembly of FIG. **1**A;

FIG. **1**C is a bottom, front perspective view of FIG. **1**B;

FIG. **1**D is a bottom, rear perspective view of FIG. **1**B;

FIG. **2**A is a sectioned portion along line A-A in FIG. **1**A;

FIG. **2**B is a sectioned portion along line B-B in FIG. **1**A;

FIG. **2**C is a sectioned portion along line C-C in FIG. **1**A;

FIGS. **3**A to **3**D are consecutive steps illustrating locking engagement of the locking tongue of the second container with the respective locking rib of the first container;

FIGS. **4**A to **4**D are consecutive steps illustrating locking engagement of the locking latch of the second container with the respective locking latch arresting location of the first container;

FIGS. **5**A to **5**E schematically demonstrate modularity of a container assembly according to the disclosure;

FIGS. **6**A to **6**G are various combinations of a modular container assembly according to examples of the present disclosure.

FIGS. **7**A to **12**C are directed to a carrier unit and another example of a locking mechanism, wherein:

FIG. **7**A is container carrier assembly according to an example of the disclosure, illustrating a top, left perspective view of a container unit, mounted on top of a carrier unit;

FIG. **7**B is a top, left perspective view of a second container unit, mounted on top of a first container unit, which in turn is mounted on top of a carrier unit according to an example of the present disclosure;

FIG. **8**A is a top, left perspective view of a carrier unit, illustrating the carrier engagement surface in further detail;

FIGS. **8**B and **8**C are a top and a bottom perspective view of a carrier unit, illustrating the container unit's first engagement surface in further detail;

FIG. **9**A is a side section along line F-F in FIG. **7**A, illustrating the container unit and the carrier unit unattached;

FIG. **9**B is a side section along line F-F in FIG. **7**A illustrating the container unit and the carrier unit attached;

FIG. **9**C is a close-up view of FIG. **9**B;

FIG. **9**D is a sectioned view along line F-F in FIG. **7**A illustrating the interlocking engagement of the carrier engaging elements together with the container unit's first engaging elements;

FIG. **10**A is a sectioned view along line D-D in FIG. **7**A, illustrating the locking mechanism;

FIG. **10**B is an enlarged image of the portion marked M in FIG. **10**A;

FIG. **11**A illustrates different sizes of container units forming an assembly, at a tilted orientation;

FIG. **11**B illustrates an assembled configuration balanced vertically relatively to the ground;

FIG. **12**A shows a container assembly wherein the female coupler comprises two locking ribs extending at respective side edges of two neighboring depressed locking locations;

FIG. **12**B is a section along line H-H in FIG. **12**A;

FIG. **12**C illustrates the utility module apart from the container and flipped, so as to expose the mating coupling mechanism.

FIGS. **13**A-**13**D, **14**A-**14**C, **15**A-**15**B, **16**A-**16**B, **17**, **18**A-**18**C, and **19**-**24** are different embodiments and configurations of utility modules and utility assemblies according examples of this disclosure.

DETAILED DESCRIPTION OF EMBODIMENTS

Reference is first being made to FIGS. **1**A to **6**G, directed to a first configuration of a coupling mechanism. For sake of convenience the utility modules are exemplified as containers and respectively the utility assembly is illustrates as a tool caddy. It is however appreciated that the utility modules can be of any type, shape or size, as discussed hereinabove and as will be exemplified below.

Attention is first directed to FIGS. **1**A to **4**D, illustrating a container assembly generally designated **20**, comprising four containers **22**, **24**, **26** and **28** disposed in a triple stage configuration, the stages designated A, B and C. In the illustrated example containers **24** and **26** of the second stage are half-size and overlap the footprint of the first stage container **22** and the third stage container **28**, wherein the first container **22** is for example a hand tool container and containers **24** to **28** are organizers or the like.

The term 'first container' as used herein denotes a container bearing over a top face thereof at least one other container, said at least one other container denoted herein as a 'second container'. It is thus appreciated that a second container of a container assembly comprising three or more stages of containers' serves as second container when referred to the first stage container, and as a first container when referred to a third stage container mounted thereover. Accordingly, in the illustrated example of FIGS. **1**A-**2**C, container **22** is a first container and containers **24** and **26** are second containers, whilst they function as first containers when discussing locking arrangement with respect to third stage container **28**.

Each of the containers is configured with a lid L constituting a top face of the respective container, said lids being pivotally attached and securely articulated to the respective container through a toggle locking latch **29**. Each top face (see FIG. **1**B) is configured with several depressed locking locations **32** and it is seen that the at least two depressed locking locations are disposed behind one another along imaginary lines I, II and III (though not necessarily aligned).

Each such depressed locking location is in turn configured with a laterally projecting locking rib **36** extending from a rear portion of the depressed locking location **32** towards a front face of the container. The locking rib **36** has a flat top surface **38** substantially flush with a top surface of the respective lid L, and a slanting bottom surface **40**. A front portion **46** of the depressed locking location **32** is slanted too, in the same orientation as bottom surface **40** (i.e. substantially parallel thereto).

Furthermore, the top face, namely lid L of the containers, is configured with at least one locking latch arresting location in the form of a recess **50** disposed at a front portion of the respective top face and configured with a slanted rear wall portion **52** and a right angled front wall portion **53**.

A bottom face **54** of each container **22**, **24**, **26** and **28** is configured with several projecting portions **56**, extending in register with the depressed locking locations **32**, and it is seen that the at least two projecting portions **56** are disposed behind one another along the imaginary lines I, II and III (though not necessarily aligned).

Each projecting portions **56** is configured with a locking tongue **60** laterally projecting rearwards and having a slanted surface **62** corresponding with slanting surface **40** of locking rib **36**. Also, a front portion **66** of the projecting portions **56** slants substantially parallel to the slanted surface **62** of the locking tongue **60**.

It is essential that the at least two depressed locking locations **32** and the at least two projecting portions **56** be disposed behind one another (though not necessarily aligned), as exemplified by imaginary lines I, II and III (though not necessarily aligned).

A plunger-like locking latch **70** is disposed at a front portion of each container, said locking latch **70** disposed in register with the recesses **50** and configured with a slanting rear wall portion **72** and a right angled front wall portion **74**,

corresponding with the sloping wall portions of the recesses **50**. The locking latch **70** has an elongate finger engaging aperture **73** (FIG. **2**A) accessible through an aperture **75** formed in register at a front wall face of the respective second container, said locking latch **70** being normally biased to project under force of coiled spring **71**, such that the locking latch **70** is axially displaceable between a projecting, locked position and a temporary retracted position during transition into the locked position.

The locking latch **70** is typically single-handedly manipulable between its locking position and its releasing position, such that manipulation of the locking latch to disengage it from the locking latch arresting location **50** can be easily facilitated using one hand simultaneously with gripping the carrying handle **80**. As seen in FIGS. **1**A-**2**C, manipulating the finger engaging aperture **73**, being part of locking latch **70**, is disposed opposite to and at finger-reach distance from the carrying handle **80** when the handle is at its carrying position tilted upwards. This enables a grab, release and go detachment of the second utility module from the first utility module in a simple single-handed operation.

When it is required to detachably attach a second container over a first container, the former is placed over the later (FIG. **3**A), placing the projecting portions **56** within the depressed locking location **32** (FIG. **3**B) with the locking tongues **60** engaging below and being gradually arrested by the respective locking ribs **36** arresting is obtained (FIG. **3**C) until complete arresting is obtained (FIG. **3**D). Simultaneously, as the locking tongues **60** arrest by the locking ribs **36**, the locking latch **70** of the second container slides into the locking latch arresting location (recess **50**) and finally snaps into locking engagement therewith. It is noted (FIGS. **4**A to **4**D) that first (FIGS. **4**B and **4**C) the locking latch **70** displaces upwards against the biasing effect of spring **71**, and when the second container reaches the final locking position over the first container, the locking latch **70** plunges into arresting position within the recess **50**.

At the locked position the second container is attached over the top face of the first container, such that they can be moved as an integrated unit. Detaching of a second container from a first container is easily facilitated by unlocking, obtained by displacing the locking latch **70** upwards against the biasing effect of spring **71**, whereby the second container can be displaced with respect to the first container and detached therefrom.

As further seen in FIGS. **1**A-**4**D, each of the containers **22**, **24**, **26** and **28**, is configured at a front face thereof with a tiltable carrying handle **80**, for carrying a respective container or the entire container assembly **20**. Also seen, some of the containers can be configured with fender-like protectors **90** at their corners.

Further attention is now directed to FIGS. **5**A to **5**E demonstrating examples of modularity of a container assembly according to the disclosure. FIG. **5**A is a planner top view of a first container **94** and FIGS. **5**B to **5**E illustrate second containers superimposed over the first container **94**. In FIG. **5**B a second container **96** is substantially as big as the first container **94**, i.e. having the same footprint. In FIG. **5**C a second container **98** is as wide as the first container **94**, however narrower in depth, and disposed at a front portion of the first container. In FIG. **5**D two second containers **99**A and **99**B are mounted over the first container **94** and occupy substantially the entire footprint thereof, whereby each of containers **99**A and **99**B is independently attachable and detachable from the first container **94**, as exemplified hereinabove. In FIG. **5**E two second containers **100**A and **100**B are positioned over the first container **94**, occupying the entire width though narrower in depth and extending from a front portion of the first container **94**.

Turning now to FIGS. **6**A to **6**K, there are illustrated several examples of container assemblies, subassemblies and their components. FIG. **6**A illustrates a disassembled container assembly collectively designated **104** and comprising a base container **106**, a chest of drawers module **108** comprising three drawers, a tool caddy module **110**, a compartmented storage module **112** and a half-sized compartmented storage module **114** (typically two of which). It is noted that the base container is configured for locomoting and comprises at a rear thereof wheels **116** and a telescopic handle **118**.

As can be appreciated from FIGS. **6**B through **6**D, various container assemblies are illustrated, the arrangement is such that in practice any module can constitute either a first container or a second container, as defined hereinabove (though it is more likely that base container **106** serves as a first container).

FIGS. **6**E and **6**F illustrate a chest of drawers module **108**, illustrated separately in FIG. **6**E and mounted over a similar drawer module **108** in FIG. **6**F. It is appreciated that the drawers of each module can be locked at their closed position to prevent spontaneous opening thereof whilst carrying a module. Furthermore, each module **108** is configured with a pair of carrying handles **115** disposed at top side wall portions thereof, to facilitate carrying of the module.

In FIG. **6**G there is illustrated a subassembly comprising a first container in the form of a tool caddy module **110** and second container in the form of a compartmented storage module **112** attached thereto, whilst the lid **119** of the first container is open facilitating access to the contents thereof.

Further attention is now directed to FIGS. **7**A to **16**B, showing a third aspect of the disclosure, namely a utility module being a mobile carrier unit and comprising at least one carrier engagement surface, compatible for interlocking engagement in a detachable manner with a first engagement surface of a second utility module. For sake of example only, the second utility module exemplified in the annexed drawings is in the form of a utility container. It is however appreciated that the utility modules can be of any type, shape or size, as discussed hereinabove and as will be exemplified below. Accordingly, the term container unit as used in the following description denotes any type of a utility module, as discussed herein the specification.

Attention is first directed to FIG. **7**A, illustrating a container carrier assembly generally designated **200** comprising a container unit **202** (utility module) mounted on top of a carrier unit **206**. The carrier unit **206** is equipped with a telescopic manipulating handle **210**, a pair of rear wheels **208** and a set of horizontally stabilizing support legs **212** at a front portion of the carrier unit **206**. The carrier unit **206** and the container unit **202** are engaged in an interlocking engagement via their engagement surfaces, i.e. a carrier engagement surface **216** at a top face of the a carrier unit **206** (best seen in FIG. **8**A), and the container unit's first engagement surface **220** (namely its bottom face; best seen in FIGS. **8**B and **8**C). The container unit **202** is configured with yet a second engagement surface **226** (namely the container's top face), simulating the carrier engagement surface **216**. The container unit **202** further comprises a locking mechanism **230** configured for arresting within a respective notch **231** at the carrier engagement surface **216**, to thereby to prevent displacement and separation of the engagement surfaces **216** and **220** once they are interlocked, as later will be explained.

The carrier engagement surface **216** seen in greater detail in FIG. **8**A, illustrates a top perspective view of a carrier unit **206** with the telescopic handle **210** in a retracted position. The carrier engagement surface **216** comprises multiple carrier engaging elements **236**, depressed from the surface, and designated for interlockingly receiving respective container unit's first engaging elements **240**, projecting from the first engagement surface (bottom face) **220** of the container unit **202**.

Each carrier engaging element **236**, is a so-called female coupler and has a depressed locking location configured with at least one locking rib extending above a depressed surface and along a sliding path and having an open edge facing in a first sense. As seen in the drawings, it is generally constituted by a receiving recessed depression **244** in the carrier engagement surface **216**, configured with a pair of facing locking ribs **248**, forming the aforementioned recess. The locking ribs **248** extend substantially parallel to sliding path of the container unit **202** with respect to the carrier unit **206**, said path (designated Pin FIGS. **7**A and **10**B). Further noted, side walls **250** of depressions **244** are sloped in order to allow directing of a container unit's first engaging element **240**, mounted upon it, to its interlocking position.

A corresponding coupler configured at the container unit is a so-called male coupler comprising a projecting locking location disposed in register with said depressed locking location and configured with at least one locking tongue extending along said engaging sliding path at a second sense, opposite to said first sense, and configured for arresting engagement at a space between said locking rib and depressed surface. As seen, a single container unit's engaging element **240** is generally constituted a downwardly projecting outwards protrusion **258**, projecting from the bottom face **220** of the container **202**.

In order to lock the container **202** over the carrier unit **206**, upon placing the container **202** over the carrier engagement surface **216** of carrier unit **206** one must mount the container unit's first engaging elements **240** into the depressions **244** and then slide the container **202** along the sliding path P (i.e. towards the locking ribs **248**) so that the engaging elements **240** engage below said projecting ribs/shoulders **248** and the engaging elements **240** are thus arrested at a space between said locking ribs and the depressed surface, as seen in FIG. **9**C. Interlocking engagement of the container (or any other utility module) can be facilitated by a single male-female locking mechanism of the aforementioned type, or by a plurality of such locking mechanism, at any location over the carrier unit **206**.

The shape and size of the locking members is modular as far as the depression **244** in the carrier engagement surface **216**, can be single or double in size (e.g. **236** and **236**A in FIG. **8**A, respectively), so it is large enough to accommodate two container unit's first engaging elements **240**, or two neighboring container unit's first engaging elements.

Locking/engaging and detaching of this configuration is similar to a single locking module.

The engagement and locking mechanism is modular in the sense that any first article can be easily and readily articulated to a surface of any second article, wherein the articulation is strong and firm (i.e. substantially motionless).

With further reference to FIG. **7**B, there are illustrated two containers **202**A and **202**B articulated over one another, the arrangement being such that the bottom face of the intermediate container **202**A serves for engaging with the top face of the carrier unit **206** and likewise, the top face of the intermediate container **202**A serves for engaging with the bottom face of the top container **202**B, as discussed herein above. The arrangement is such that each stage is lockingly secured by the locking mechanism **230**, wherein each stage can be detached from the stage below upon releasing locking engagement of the respective locking mechanism **230**.

The locking mechanism **230** is shown in further detail in FIGS. **10**A and **10**B. The locking mechanism comprises a locking pin **231** normally biased by spring **233** such that a tip **235** projects from a bottom surface of the container **202** (see also FIG. **8**B) and is configured for snap arresting within a respective notch **231** configured at the engagement surface **216** of the carrier unit **206** (seen also in FIG. **8**A). The locking pin **231** is slidable within a race at the side wall of the container, and comprises a finger manipulating portion at **237** (accessible through an opening at the side wall of the container), for displacing the locking pin, against the biasing effect of spring **233**, into its disengaged position, thus facilitating sliding the container along the path P into disengagement from the carrier unit (or respective other container or utility module). The carrier unit **206** is further configured at a bottom end, with a pair of stability supports **264** (FIGS. **8**A, **11**B), configured for supporting the carrier unit, with or without a container attached thereto, at an upright, i.e. vertical position, thus preventing it from tipping over, in particular with containers or any other utility module articulated thereto. Stability supports **264** can be, according to a particular configuration, an extension of the telescopic handle **210**, whereby the stability supports are functional as such only when the handle is fully contracted. However, in the illustration of FIGS. **16**A-**16**B the utility assembly **253** is maintained at its upright position owing to said stability supports **264** and further bearing over a side face **266** of the intermediate container **202**A, being substantially flush with a bottom face of the stability supports **264**.

With further reference to FIGS. **12**A to **12**C there is illustrated a modification of articulation between a first utility module (container **300** in the particular example) and a second utility module (two work-piece supports **304** in the particular example). The container **300** is substantially similar to that illustrated in the previous examples, wherein the cover/lid **308** is configured with a plurality of female coupler members **310**, each configured with a depressed locking location and a pair of locking ribs extending above the depressed surface and along a sliding path. The opposing locking ribs **312**A and **312**B have an open edge facing in a first sense (the introducing direction).

In the examples hereinbefore, engagement with a corresponding male coupler took place within the vicinity of a single coupling element, i.e. over two engaging ribs **312**A and **312**B of a single depressed locking location facing each other. However, in the example of FIGS. **12**A-**12**C engagement of the work-piece supports **304** takes place over two engaging ribs **312**A and **312**B of two neighboring depressed locking locations **308**A and **308**B. Accordingly, the male coupler of the two work-piece supports **304** is configured for arresting with the two engaging ribs **312**A and **312**B by two individual (separate) male couplers **316**A and **316**B, each configured for arresting one of the respective engaging ribs **312**A and **312**B. Arresting of the male projections **316** takes place as discussed before, by arresting below the respective engaging ribs, within the space at the depressed locking location. In spite of the relative narrow body structure of the work-piece supports **304**, they are each configured with a locking mechanism **330**, similar to locking mechanism **230** discussed hereinbefore.

Turning now to FIGS. **13**A-**13**D, **14**A-**14**C, **15**A-**15**B, **16**A-**16**B, **17**, **18**A-**18**C, and **19**-**24**, there are illustrated

various examples of utility modules, utility assemblies and various configurations according to the disclosure.

FIG. **13**A illustrates a utility module assembly generally designated **400**, comprising a wheeled base container **402** supporting an intermediate container **404**, bearing in turn a cooler box **406** and a power unit **408** disposed side by side over the intermediate container. At least the intermediate container **404** is configured at a bottom face thereof with a male-type coupling arrangement, for attachment over the cover of the base container, said cover configured with a respective female coupling arrangement. The cover of the intermediate container **404** is configured with a similar female coupling arrangement, and can thus engage with one the utility modules **406** and **408**, each configured at its bottom face with a respective male-type coupling arrangement.

It is seen in FIGS. **13**B through **13**D that the intermediate container **404** is fitted with a pivotal carrying handle **418** articulated at the top side walls thereof. The carrying handle has a thickness t and the arrangement is such that at the stowed/folded position (FIGS. **13**B, **13**D) the handle **418** is received within a peripheral groove **422** extending over a top edge of the intermediate container **404** and a peripheral groove **424** extending at a bottom edge of the utility modules **408** and **406** (cooler box **406** and a power unit **408**), such that the handle **418** does not constitute an obstacle in mounting and interlocking a utility module over another utility module. It is also seen that at least some of the utility modules are configured with side handles **428** serving both as carrying handles and as bumpers.

FIGS. **14**A to **14**C illustrate a first utility module in the form of a container **430** supporting two detachable workpiece-piece supports **432** (attached as discussed herein before with reference to FIGS. **12**A-**12**C). FIG. **14**C illustrates a utility module in the form of a work surface **436** configured with a vice race **438**, so that a vice **440**, or other workshop tools can be used. The workpiece-piece supports **432** are configured with a male type coupling having projecting locking locations **444** for engaging with respective female couplers.

In FIGS. **15**A and **15**B there is illustrated a back-rack **450** being a substantially rigid platform having a carrying handle **451** and configured at one side thereof with a pair of adjustable shoulder harnesses **452**, and an adjustable waist harness **454**. The other side of the back-rack is configured as a universal utility mounting platform **458**, configured with a plurality of attachment locations **460**. In the illustrated example all attachment locations **460** are so-called female attachments (as discussed hereinabove in detail), however it is appreciated that the attachment locations can just as well be male-type attachments, or a combination of male and female attachments. According to yet an example (not shown), one side of the carrying platform can be configured with male-type attachments, and an opposite side of the platform be configured with female-type attachments, wherein a used has the choice of attaching the platform to the harness system at an orientation of choice.

In FIG. **16**A there is illustrated a utility module in the form of a wheeled carrying unit **464** (shown from a bottom side), similar to that disclosed in connection with FIGS. **7**A to **11**B. The carrying unit **464** comprises a rigid platform **466** fitted at a top face thereof with a female/male attaching arrangement in accordance with the disclosure, such that any utility module according to the disclosure can be detachably attached thereto. Also provided is a telescopic manipulating handle **468** and a pair of wheels **466**. The carrying unit can be fitted with a collapsible support plate configuring it into a pushcart (not shown).

FIG. **16**B shows a utility assembly **276** comprising a wheeled base container **278** interlocked with a first intermediate container **280** mounted thereover (constituting a second stage of the assembly), and a second intermediate container **282** mounted thereover (constituting a third stage of the assembly **276**), there being yet a fourth stage utility module container **284** mounted over the second intermediate container **282**.

Whilst the second intermediate container **282** has a wider footprint than the first intermediate container **280**, this does not constitute any difficulty as far as attaching it over the second intermediate container **282**, and further, the top face of the second intermediate container **282** has a great surface suited for articulation thereof of several fourth stage utility modules (only one shown).

FIG. **17** shows a carrying bag **281** having soft side walls **283** (in the example illustrated made of fabric), however fitted with (integrally or detachable) an articulation platform base **284**, said articulation platform made of a firm rigid material and is configured with four male-type coupling locations **288** of the type disclosed hereinabove. The carrying bag **281** has a carrying strap **290** useful for hand held or shoulder carrying of the bag.

FIG. **18**A shows a rigid coupling platform **300**, configured with a plurality of female coupling locations (of the type disclosed herein) and further configured with bolt eyes **298** for securing to any desired surface, and carrying bars **313**.

The coupling platform **300** can be attached for example to a truck bed **306** (FIG. **20**), directly over the truck bed or over a cargo container attached to the truck. The coupling platform **300** can be attached to a wall, as in FIG. **18**B, wherein a plurality of various utility modules can be articulated thereto. For example, utility modules can be an electric charger **315** of a power tool, a wall mounted sorting container **314**, a hand tool rack **318** (FIG. **18**C), a tool coupling adaptor **320** (FIG. **18**C), etc.

In FIG. **19** there is illustrated a belt-mount **319** configured as a female coupler according to the disclosure, wherein a tool **321** or a bag/pouch configured with a male coupler can be detachably attached thereto.

In FIG. **21** there is illustrated a wall rack **326** comprising four utility modules in the form of articulation platforms **328** (mountable at different elevations about the wall supports **327**) each configured for bearing and attaching thereto any utility module in accordance with the disclosure.

In FIG. **22** there is illustrated a mobile work stand **340** comprising a wheeled base **342** supporting two racks **344** with four utility modules in the form of articulation platforms **346** (mountable at different elevations about the wall supports **327**) each configured for bearing and attaching thereto any utility module (e.g. containers **348**) in accordance with the disclosure.

In FIG. **23** the utility module is in the form of a dolly **352** configured with wheels **354** and having a top surface configured with an array of female type couplings, as discussed.

In FIG. **24** there is illustrated a utility coupling platform **358** suited for articulation to any desired article (e.g. a bag, a tool, etc.). The utility coupling platform is configured at least at one face thereof with a male coupling locations **360** mimicking the coupling arrangement of the disclosure, rendering it suitable for articulation with a coupling system according to the disclosure.

What is claimed is:

1. A container assembly comprising:

a first container comprising:

a first coupler extending from a first face of the first container, the first coupler comprising two sidewalls, a back wall, and a rib, the back wall located between the two sidewalls, the two sidewalls and the back wall projecting from a depressed surface of the first face, and the rib extending from the back wall in a first direction;

a lid pivotally attached to the first container; and

a toggle locking latch configured to latch the lid of the first container in a closed position;

a second container comprising:

a second coupler extending from a second face of the second container, the second coupler comprising a tongue offset from the second face, the tongue extends in a second direction opposite the first direction, the tongue of the second container is engageable with the rib of the first container;

a lid pivotally attached to the second container; and

a toggle locking latch configured to latch the lid of the second container in a closed position;

wherein the first and second couplers of the first and second containers engage each other when the first and second containers are slid with respect to each other along a sliding path defined by the rib and the tongue;

a locking latch arresting location defined by one of the first container or the second container; and

a locking latch coupled to the other of the first container or the second container, the locking latch positionable in a locked position engaging the locking latch arresting location thereby limiting sliding displacement of the first container with respect to the second container.

2. The container assembly of claim 1, wherein the sliding path is perpendicular to the locking latch.

3. The container assembly of claim 2, wherein the locking latch comprises a rear surface, wherein the sliding path is perpendicular to the rear surface.

4. The container assembly of claim 3, wherein the locking latch is spring biased to engage with the locking latch arresting location.

5. The container assembly of claim 1, wherein the second coupler includes a front surface opposite the tongue, wherein the front surface is slanted relative to the second face of the second container.

6. The container assembly of claim 5, wherein the tongue includes a slanted surface opposite from and parallel to the front surface of the second coupler.

7. The container assembly of claim 1, wherein the first face of the first container comprises a top face of the lid of the first container, and wherein the second face of the second container comprises a bottom face of the second container.

8. The container assembly of claim 1, wherein a width of the second container is half of a width of the first container, and the second container is located on top of the first container.

9. The container assembly of claim 8, wherein the first container further comprises a second toggle locking latch configured to latch the lid of the first container in a closed position.

10. The container assembly of claim 9, wherein the first container further comprises a handle coupled to a front face of the first container, wherein the handle is located between the first and second toggle locking latches.

11. The container assembly of claim 1, wherein the second container further comprises a pair of rear wheels and a telescoping handle extending upwards from a rear wall of the second container.

* * * * *