PTO/SB/44 (09-07)
Approved for use through 03/31/2023. OMB 0651-0033
U.S. Patent and Trademark Office; U.S. DEPARTMENT OF COMMERCE
Under the Paperwork Reduction Act of 1995, no persons are required to respond to a collection of information unless it displays a valid OMB control number.
(Also Form PTO-1050)

UNITED STATES PATENT AND TRADEMARK OFFICE
CERTIFICATE OF CORRECTION

PATENT NO. : 11,365,026

APPLICATION NO.: 17/536,521

ISSUE DATE : June 21, 2022

INVENTOR(S) : Yaron Brunner, Grant T. Squiers, Christopher S. Hoppe, Steven W. Hyma

It is certified that an error appears or errors appear in the above-identified patent and that said Letters Patent is hereby corrected as shown below:

In the Related U.S. Application Data:

the phrase "which is a continuation of application No. 15/826,232, filed on Nov. 29, 2017, now Pat. No. 10,070,534" should read "which is a continuation of application No. 15/826,232, filed on Nov. 29, 2017, now Pat. No. 10,703,534". In particular, the patent number for application No. 15/826,232 should be "10,703,534", not "10,070,534". This correction is consistent with both the Application Data Sheet as originally filed, and the Filing Receipt issued by the US Patent Office.

MAILING ADDRESS OF SENDER (Please do not use Customer Number below):

Reinhart Boerner Van Deuren, s.c.; ATTN: Derek H. Campbell, Reg. No. 70,608
1000 North Water Street, Suite 1700
Milwaukee, WI 53202

This collection of information is required by 37 CFR 1.322, 1.323, and 1.324. The information is required to obtain or retain a benefit by the public which is to file (and by the USPTO to process) an application. Confidentiality is governed by 35 U.S.C. 122 and 37 CFR 1.14. This collection is estimated to take 1.0 hour to complete, including gathering, preparing, and submitting the completed application form to the USPTO. Time will vary depending upon the individual case. Any comments on the amount of time you require to complete this form and/or suggestions for reducing this burden, should be sent to the Chief Information Officer, U.S. Patent and Trademark Office, U.S. Department of Commerce, P.O. Box 1450, Alexandria, VA 22313-1450. DO NOT SEND FEES OR COMPLETED FORMS TO THIS ADDRESS. **SEND TO: Attention Certificate of Corrections Branch, Commissioner for Patents, P.O. Box 1450, Alexandria, VA 22313-1450.**

If you need assistance in completing the form, call 1-800-PTO-9199 and select option 2.

Privacy Act Statement

The **Privacy Act of 1974 (P.L. 93-579)** requires that you be given certain information in connection with your submission of the attached form related to a patent application or patent. Accordingly, pursuant to the requirements of the Act, please be advised that: (1) the general authority for the collection of this information is 35 U.S.C. 2(b)(2); (2) furnishing of the information solicited is voluntary; and (3) the principal purpose for which the information is used by the U.S. Patent and Trademark Office is to process and/or examine your submission related to a patent application or patent. If you do not furnish the requested information, the U.S. Patent and Trademark Office may not be able to process and/or examine your submission, which may result in termination of proceedings or abandonment of the application or expiration of the patent.

The information provided by you in this form will be subject to the following routine uses:

1. The information on this form will be treated confidentially to the extent allowed under the Freedom of Information Act (5 U.S.C. 552) and the Privacy Act (5 U.S.C 552a). Records from this system of records may be disclosed to the Department of Justice to determine whether disclosure of these records is required by the Freedom of Information Act.
2. A record from this system of records may be disclosed, as a routine use, in the course of presenting evidence to a court, magistrate, or administrative tribunal, including disclosures to opposing counsel in the course of settlement negotiations.
3. A record in this system of records may be disclosed, as a routine use, to a Member of Congress submitting a request involving an individual, to whom the record pertains, when the individual has requested assistance from the Member with respect to the subject matter of the record.
4. A record in this system of records may be disclosed, as a routine use, to a contractor of the Agency having need for the information in order to perform a contract. Recipients of information shall be required to comply with the requirements of the Privacy Act of 1974, as amended, pursuant to 5 U.S.C. 552a(m).
5. A record related to an International Application filed under the Patent Cooperation Treaty in this system of records may be disclosed, as a routine use, to the International Bureau of the World Intellectual Property Organization, pursuant to the Patent Cooperation Treaty.
6. A record in this system of records may be disclosed, as a routine use, to another federal agency for purposes of National Security review (35 U.S.C. 181) and for review pursuant to the Atomic Energy Act (42 U.S.C. 218(c)).
7. A record from this system of records may be disclosed, as a routine use, to the Administrator, General Services, or his/her designee, during an inspection of records conducted by GSA as part of that agency's responsibility to recommend improvements in records management practices and programs, under authority of 44 U.S.C. 2904 and 2906. Such disclosure shall be made in accordance with the GSA regulations governing inspection of records for this purpose, and any other relevant (*i.e.*, GSA or Commerce) directive. Such disclosure shall not be used to make determinations about individuals.
8. A record from this system of records may be disclosed, as a routine use, to the public after either publication of the application pursuant to 35 U.S.C. 122(b) or issuance of a patent pursuant to 35 U.S.C. 151. Further, a record may be disclosed, subject to the limitations of 37 CFR 1.14, as a routine use, to the public if the record was filed in an application which became abandoned or in which the proceedings were terminated and which application is referenced by either a published application, an application open to public inspection or an issued patent.
9. A record from this system of records may be disclosed, as a routine use, to a Federal, State, or local law enforcement agency, if the USPTO becomes aware of a violation or potential violation of law or regulation.

UNITED STATES
PATENT AND TRADEMARK OFFICE

P.O. Box 1450
Alexandria, VA 22313 - 1450
www.uspto.gov

ELECTRONIC ACKNOWLEDGEMENT RECEIPT

APPLICATION #	RECEIPT DATE / TIME	ATTORNEY DOCKET #
17/536,521	**02/01/2024 04:07:44 PM Z ET**	**066749-3309**

Title of Invention

UTILITY ASSEMBLY AND COUPLING MECHANISM

Application Information

APPLICATION TYPE	Utility - Nonprovisional Application under 35 USC 111(a)	PATENT #	11365026
CONFIRMATION #	7250	FILED BY	Sarah Sesterhenn-Lee
PATENT CENTER #	64173530	FILING DATE	11/29/2021
CUSTOMER #	142078	FIRST NAMED INVENTOR	Yaron Brunner
CORRESPONDENCE ADDRESS	-	AUTHORIZED BY	Derek Campbell

Documents

TOTAL DOCUMENTS: 2

DOCUMENT	PAGES	DESCRIPTION	SIZE (KB)
066749-3309_Request_for_Certificate_of_Correction.pdf	2	Request for Certificate of Correction	81 KB
066749-3309_Certificate_of_Correction.pdf	2	Miscellaneous Incoming Letter	150 KB

Digest

DOCUMENT	MESSAGE DIGEST(SHA-512)
066749-3309_Request_for_Certificate_of_Correction.pdf	D356270B780621A9061752E0506B3152FFDBC3E2491F27D3C7FAAEC0DF57FCBD1116B692A0A9228DAB9797C80B7047BC325EF0382E66617B644B9178141B84AD

066749-3309_Certificate_of_Correction.pdf

76BA3BC4431F3D17E1FFFFF8A14DF7AB913D059581A2D6E73150191662AC874D9BCB6CFB8CD7EEA7BDBAC29161875AF935D66896E5AD4D7E54C387A8ACFBA8BB

This Acknowledgement Receipt evidences receipt on the noted date by the USPTO of the indicated documents, characterized by the applicant, and including page counts, where applicable. It serves as evidence of receipt similar to a Post Card, as described in MPEP 503.

New Applications Under 35 U.S.C. 111

If a new application is being filed and the application includes the necessary components for filing date (see 37 CFR 1.53(b)-(d) and MPEP 506), a Filing Receipt (37 CFR 1.54) will be issued in due course and the date shown on this Acknowledgement Receipt will establish the filing date of the application

National Stage of an International Application under 35 U.S.C. 371

If a timely submission to enter the national stage of an international application is compliant with the conditions of 35 U.S.C. 371 and other applicable requirements a Form PCT/DO/EO/903 indicating acceptance of the application as a national stage submission under 35 U.S.C. 371 will be issued in addition to the Filing Receipt, in due course.

New International Application Filed with the USPTO as a Receiving Office

If a new international application is being filed and the international application includes the necessary components for an international filing date (see PCT Article 11 and MPEP 1810), a Notification of the International Application Number and of the International Filing Date (Form PCT/RO/105) will be issued in due course, subject to prescriptions concerning national security, and the date shown on this Acknowledgement Receipt will establish the international filing date of the application.

IN THE UNITED STATES PATENT AND TRADEMARK OFFICE

Patent Number: 11,365,026

Issued: June 21, 2022

Inventor(s): Yaron Brunner, Grant T. Squiers, Christopher S. Hoppe, Steven W. Hyma

Title of Invention: Utility Assembly and Coupling Mechanism

Commissioner of Patents
P.O. Box 1450
Alexandria, VA 22313-1450

ATTN: Office of Data Management Attention: Certificates of Correction Branch

REQUEST FOR CERTIFICATE OF CORRECTION
UNDER 37 C.F.R. § 1.322

It is requested that a Certificate of Correction be issued to correct errors found in the above-identified patent. Attached hereto is a Certificate of Correction, which indicates the requested correction.

It is believed that there is no charge for this request since the applicants were not responsible for such error, as will be apparent upon a comparison of the issued patent with the application as allowed.

Fees

☒ **No fee** is owed by the applicant(s).

Method of Payment of Fees

☐ Attached is a check in the amount of $.

☐ Charge Deposit Account No. 18-0882 in the amount of $.

Please send the Certificate to:

Name: Derek H. Campbell
Address: Reinhart Boerner Van Deuren, s.c.
1000 North Water Street, Suite 1700
Milwaukee, WI 53202

It is not believed any fees are due. However, the Commissioner is hereby authorized to charge any fees which may be required regarding this application under 37 C.F.R. §§ 1.16-1.17, or credit any overpayment, to Deposit Account No. 18-0882.

Respectfully submitted,

Date: February 1, 2024

By: /Derek H. Campbell/

Reinhart Boerner Van Deuren s.c.
Customer Number: 142078
Telephone: (414) 298-8374
Facsimile: (414) 298-8097

Derek H. Campbell
Agent for Applicant
Registration No. 70,608

UNITED STATES PATENT AND TRADEMARK OFFICE

UNITED STATES DEPARTMENT OF COMMERCE
United States Patent and Trademark Office
Address: COMMISSIONER FOR PATENTS
P.O. Box 1450
Alexandria, Virginia 22313-1450
www.uspto.gov

APPLICATION NO.	ISSUE DATE	PATENT NO.	ATTORNEY DOCKET NO.	CONFIRMATION NO.
17/536,521	06/21/2022	11365026	066749-3309	7250

142078 7590 06/01/2022

Reinhart (Milwaukee Tool)
ATTN: TRAVIS MCDONNELL, PARALEGAL
1000 NORTH WATER STREET
SUITE 2100
MILWAUKEE, WI 53202

ISSUE NOTIFICATION

The projected patent number and issue date are specified above.

Determination of Patent Term Adjustment under 35 U.S.C. 154 (b)
(application filed on or after May 29, 2000)

The Patent Term Adjustment is 0 day(s). Any patent to issue from the above-identified application will include an indication of the adjustment on the front page.

If a Continued Prosecution Application (CPA) was filed in the above-identified application, the filing date that determines Patent Term Adjustment is the filing date of the most recent CPA.

Applicant will be able to obtain more detailed information by accessing the Patent Application Information Retrieval (PAIR) WEB site (http://pair.uspto.gov).

Any questions regarding the Patent Term Extension or Adjustment determination should be directed to the Office of Patent Legal Administration at (571)-272-7702. Questions relating to issue and publication fee payments should be directed to the Application Assistance Unit (AAU) of the Office of Patents Stakeholder Experience (OPSE), Stakeholder Support Division (SSD) at (571)-272-4200.

INVENTOR(s) (Please see PAIR WEB site http://pair.uspto.gov for additional inventors):

Yaron Brunner, Kibbutz Gvat, ISRAEL;
Grant T. Squiers, Cudahy, WI;
Christopher S. Hoppe, Cedarburg, WI;
Steven W. Hyma, Milwaukee, WI;

APPLICANT(s) (Please see PAIR WEB site http://pair.uspto.gov for additional applicants):

Milwaukee Electric Tool Corporation, Brookfield, WI;
Keter Plastic LTD., Herzelyia, ISRAEL;

The United States represents the largest, most dynamic marketplace in the world and is an unparalleled location for business investment, innovation, and commercialization of new technologies. The USA offers tremendous resources and advantages for those who invest and manufacture goods here. Through SelectUSA, our nation works to encourage and facilitate business investment. To learn more about why the USA is the best country in the world to develop technology, manufacture products, and grow your business, visit SelectUSA.gov.

ALL REFERENCES CONSIDERED EXCEPT WHERE LINED THROUGH. /G.R.W/

PTO/SB/08 (09-06)
Approved for use through 03/31/2007. OMB 0651-0031
U.S. Patent and Trademark Office: U.S. DEPARTMENT OF COMMERCE

Under the Paperwork Reduction Act of 1995, no persons are required to respond to a collection of information unless it contains a valid OMB control number.

Substitute for form 1449/PTO

INFORMATION DISCLOSURE STATEMENT BY APPLICANT

Date Submitted: November 29, 2021

(use as many sheets as necessary)

Sheet 9 of 19

Complete if Known	
Application Number	To be determined
Filing Date	November 29, 2021
First Named Inventor	Yaron Brunner
Art Unit	To be determined
Examiner Name	To be determined
Attorney Docket Number	066749-3309

U.S. PATENT DOCUMENTS

Examiner Initials*	Cite No.[1]	Document Number	Publication Date MM-DD-YYYY	Name of Patentee or Applicant of Cited Document	Pages, Columns, Lines, Where Relevant
	A247	2018/0099405	04-12-2018	Reinhart	
	A248	2018/0127007	05-10-2018	Kravchenko	
	A249	2018/0153312	06-07-2018	Buck James et al.	
	A250	2018/0161975	06-14-2018	Brunner; Varon	
	A251	2018/0186513	07-05-2018	Brunner	
	A252	2018/0213934	08-02-2018	Wolle et al.	
	A253	2018/0220758	08-09-2018	~~Rothenberger AG~~	Burchia
	A254	2018/0229889	08-16-2018	Li	
	A255	2018/0290288	10-11-2018	BRUNNER; Varon	
	A256	2019/0001482	01-03-2019	Wolle et al.	
	A257	2019/0002004	01-03-2019	BRUNNER; Varon	
	A258	2019/0031222	01-31-2019	TAKVAR et al.	
	A259	2019/0039781	02-07-2019	Kogel	
	A260	2019/0106244	04-11-2019	Brunner et al.	
	A261	2019/0168376	06-06-2019	BROCKET; Stephen	
	A262	2019/0225371	07-25-2019	Hoppe et al.	
	A263	2020/0029543	01-30-2020	Householder	
	A264	2020/0055534	02-20-2020	HASSELL	
	A265	2020/0147781	05-14-2020	Squiers et al.	
	A266	2020/0165036	05-28-2020	Squiers et al.	
	A267	2020/0243925	07-30-2020	Polakowski et al.	
	A268	2020/0299027	09-24-2020	Brunner et al.	
	A269	2020/0346819	11-05-2020	Kogel et al.	
	A270	2021/0025706	01-28-2021	Millane	
	A271	2021/0031975	02-04-2021	Brunner at el.	
	A272	2021/0039831	02-11-2021	Brunner at el.	
	A273	2021/0039831	02-11-2021	Brunner et al.	
	A274	2021/0155373	05-27-2021	Cai	
	A275	2021/0187725	06-24-2021	Brunner	
	A276	2021/0267368	09-02-2021	Bruins	
	A277	D232,798	09-17-1974	Roche et al.	
	A278	D285,986	10-07-1986	Huang	

Change(s) applied to document, /P.H./ 5/13/2022

Examiner Signature	/GIDEON R WEINERTH/	Date Considered	02/12/2022

*EXAMINER: Initial if reference considered, whether or not citation is in conformance with MPEP 609. Draw line through citation if not in conformance and not considered. Include copy of this form with next communication to applicant. 1 Applicant's unique citation designation number (optional). 2 See Kinds Codes of USPTO Patent Documents at www.uspto.gov or MPEP 901.04. 3 Enter Office that issued the document, by the two-letter code (WIPO Standard ST.3). 4 For Japanese patent documents, the indication of the year of the reign of the Emperor must precede the serial number of the patent document. 5 Kind of document by the appropriate symbols as indicated on the document under WIPO Standard ST.16 if possible. 6 Applicant is to place a check mark here if English language Translation is attached.

This collection of information is required by 37 CFR 1.97 and 1.98. The information is required to obtain or retain a benefit by the public which is to file (and by the USPTO to process) an application. Confidentiality is governed by 35 U.S.C. 122 and 37 CFR 1.14. This collection is estimated to take 2 hours to complete, including gathering, preparing, and submitting the completed application form to the USPTO. Time will vary depending upon the individual case. Any comments on the amount of time you require to complete this form and/or suggestions for reducing this burden, should be sent to the Chief Information Officer, U.S. Patent and Trademark Office, P.O. Box 1450, Alexandria, VA 22313-1450. DO NOT SEND FEES OR COMPLETED FORMS TO THIS ADDRESS. **SEND TO: Commissioner for Patents, P.O. Box 1450, Alexandria, VA 22313-1450**.

If you need assistance in completing the form, call 1-800-PTO-9199 (1-800-786-9199) and select option 2.

ALL REFERENCES CONSIDERED EXCEPT WHERE LINED THROUGH. /G.R.W/

PTO/SB/08 (09-06)
Approved for use through 03/31/2007. OMB 0651-0031
U.S. Patent and Trademark Office: U.S. DEPARTMENT OF COMMERCE

Under the Paperwork Reduction Act of 1995, no persons are required to respond to a collection of information unless it contains a valid OMB control number.

Substitute for form 1449/PTO

INFORMATION DISCLOSURE STATEMENT BY APPLICANT

Date Submitted: November 29, 2021

(use as many sheets as necessary)

Sheet 8 of 19

Complete if Known	
Application Number	To be determined
Filing Date	November 29, 2021
First Named Inventor	Yaron Brunner
Art Unit	To be determined
Examiner Name	To be determined
Attorney Docket Number	066749-3309

U.S. PATENT DOCUMENTS

Change(s) applied to document, /P.H./ 5/13/2022

Examiner Initials*	Cite No.[1]	Document Number	Publication Date MM-DD-YYYY	Name of Patentee or Applicant of Cited Document	Pages, Columns, Lines, Where Relevant
	A218	2013/146551	06-13-2013	~~Electrolux Home Prod Inc.~~	Simpson et al.
	A219	2014/0069832	03-13-2014	Roehm	
	A220	2014/0076759	03-20-2014	ROEHM et al.	
	A221	2014/0123478	05-08-2014	Gylander et al.	
	A222	2014/0161518	06-12-2014	KO	
	A223	2014/0166516	06-19-2014	Martinez; Mark R.	
	A224	2015/0014949	01-15-2015	Dittman	
	A225	2015/0034515	02-05-2015	Monyak et al.	
	A226	2015/0151427	06-04-2015	Ben-Gigi	
	A227	2015/0274362	10-01-2015	CHRISTOPHER et al.	
	A228	2015/0310842	10-29-2015	Coburn et al.	
	A229	2015/0376917	12-31-2015	Brunner	
	A230	2016/0023349	01-28-2016	Milwaukee ~~Electric Tool Corporation~~ Hoppe et al.	
	A231	2016/0130034	05-12-2016	Kuhls; Timo	
	A232	2016/0144500	05-26-2016	CHEN; KUN-CHEN	
	A233	2016/0168880	06-16-2016	Phelan; Matthew	
	A234	2016/0221177	08-04-2016	Reinhart	
	A235	2017/0121056	05-04-2017	Wang; Tzu-Chien	
	A236	2017/0138382	05-18-2017	Ko	
	A237	2017/0165828	06-15-2017	~~Festool GmbH~~ Fleischmann	
	A238	2017/0166352	06-15-2017	Hoppe; Christopher S.	
	A239	2017/0174392	06-22-2017	De Loynes	
	A240	2017/0217464	08-03-2017	Bar-erez et al.	
	A241	2017/0239808	08-24-2017	Hoppe; Christopher S.	
	A242	2017/0257958	09-07-2017	The Stanley Works ~~Israel Ltd.~~ Sabbag et al.	
	A243	2017/0266804	09-21-2017	Kinskey	
	A244	2017/0318927	11-09-2017	Krause et al.	
	A245	2017/0349013	12-07-2017	GRONHOLM	
	A246	2018/0044059	02-15-2018	BRUNNER; Varon	

Examiner Signature	/GIDEON R WEINERTH/	Date Considered	02/12/2022

*EXAMINER: Initial if reference considered, whether or not citation is in conformance with MPEP 609. Draw line through citation if not in conformance and not considered. Include copy of this form with next communication to applicant. 1 Applicant's unique citation designation number (optional). 2 See Kinds Codes of USPTO Patent Documents at www.uspto.gov or MPEP 901.04. 3 Enter Office that issued the document, by the two-letter code (WIPO Standard ST.3). 4 For Japanese patent documents, the indication of the year of the reign of the Emperor must precede the serial number of the patent document. 5 Kind of document by the appropriate symbols as indicated on the document under WIPO Standard ST.16 if possible. 6 Applicant is to place a check mark here if English language Translation is attached.

This collection of information is required by 37 CFR 1.97 and 1.98. The information is required to obtain or retain a benefit by the public which is to file (and by the USPTO to process) an application. Confidentiality is governed by 35 U.S.C. 122 and 37 CFR 1.14. This collection is estimated to take 2 hours to complete, including gathering, preparing, and submitting the completed application form to the USPTO. Time will vary depending upon the individual case. Any comments on the amount of time you require to complete this form and/or suggestions for reducing this burden, should be sent to the Chief Information Officer, U.S. Patent and Trademark Office, P.O. Box 1450, Alexandria, VA 22313-1450. DO NOT SEND FEES OR COMPLETED FORMS TO THIS ADDRESS. **SEND TO: Commissioner for Patents, P.O. Box 1450, Alexandria, VA 22313-1450**.

If you need assistance in completing the form, call 1-800-PTO-9199 (1-800-786-9199) and select option 2.

ALL REFERENCES CONSIDERED EXCEPT WHERE LINED THROUGH. /G.R.W/

PTO/SB/08 (09-06)
Approved for use through 03/31/2007. OMB 0651-0031
U.S. Patent and Trademark Office: U.S. DEPARTMENT OF COMMERCE

Under the Paperwork Reduction Act of 1995, no persons are required to respond to a collection of information unless it contains a valid OMB control number.

Substitute for form 1449/PTO

INFORMATION DISCLOSURE STATEMENT BY APPLICANT

Date Submitted: November 29, 2021

(use as many sheets as necessary)

Sheet 7 of 19

Complete if Known	
Application Number	To be determined
Filing Date	November 29, 2021
First Named Inventor	Yaron Brunner
Art Unit	To be determined
Examiner Name	To be determined
Attorney Docket Number	066749-3309

U.S. PATENT DOCUMENTS

Examiner Initials*	Cite No.[1]	Document Number	Publication Date MM-DD-YYYY	Name of Patentee or Applicant of Cited Document	Pages, Columns, Lines, Where Relevant
	A190	2010/0139566	06-10-2010	Lopuszanski, Michel	
	A191	2010/0147642	06-17-2010	Andochick; Scott E.	
	A192	2010/0176261	07-15-2010	Chen et al.	
	A193	2010/0219193	09-02-2010	Becklin	
	A194	2010/0224528	09-09-2010	Madsen	
	A195	2011/0073516	03-31-2011	Zelinskiy; Konstantin	
	A196	2011/0139665	06-16-2011	Madsen	
	A197	2011/0139777	06-16-2011	Sosnovsky et al.	
	A198	2011/0155613	06-30-2011	Koenig, Andreas et al.	
	A199	2011/017 4939	07/2011 ~~07-21-2013~~	~~Parts Express International Inc.~~ Taylor	
Change(s) applied to document, /P.H./ 5/13/2022	A200	2011/0181008	07-28-2011	BENSMAN;MARK	
	A201	2011/0220531	09-15-2011	Meether et al.	
	A202	2012/0074022	03-29-2012	McTavish et al.	
	A203	2012/0074158	03-29-2012	LAFLEUR; ANDRE	
	A204	2012/0152944	06-21-2012	Vilkomirski et al.	
	A205	2012/0160886	06-28-2012	Henny Paul et al.	
	A206	2012/0180250	07-19-2012	~~KAERCHER GMBH AND CO ALFRED KG~~	Ricklefsen et al.
	A207	2012/0207571	08-16-2012	Scott, Charles Shay	
	A208	2012/0292213	11-22-2012	Brunner	
	A209	2012/0326406	12-27-2012	LIFSHITZ; Omri	
	A210	2013/0024468	01-24-2013	Kocsis, Susan C.	
	A211	2013/0031731	02-07-2013	~~KAERCHER GMBH AND CO ALFRED KG~~ Hess	
	A212	2013/0031732	02-07-2013	~~KAERCHER GMBH AND CO ALFRED KG~~ Hess et al.	
	A213	2013/0068903	03-21-2013	~~Peerless Ind Inc.~~ O'Keene	
	A214	2013/0121783	05-16-2013	Kelly; Thomas P.	
	A215	2013/0127129	05-23-2013	Bensman, Mark et al.	
	A216	2013/0154218	06-20-2013	TIILIKAINEN	
	A217	2013/0223971	08-29-2013	Grace IV, Robert W.	

Examiner Signature	/GIDEON R WEINERTH/	Date Considered	02/12/2022

*EXAMINER: Initial if reference considered, whether or not citation is in conformance with MPEP 609. Draw line through citation if not in conformance and not considered. Include copy of this form with next communication to applicant. 1 Applicant's unique citation designation number (optional). 2 See Kinds Codes of USPTO Patent Documents at www.uspto.gov or MPEP 901.04. 3 Enter Office that issued the document, by the two-letter code (WIPO Standard ST.3). 4 For Japanese patent documents, the indication of the year of the reign of the Emperor must precede the serial number of the patent document. 5 Kind of document by the appropriate symbols as indicated on the document under WIPO Standard ST.16 if possible. 6 Applicant is to place a check mark here if English language Translation is attached.

This collection of information is required by 37 CFR 1.97 and 1.98. The information is required to obtain or retain a benefit by the public which is to file (and by the USPTO to process) an application. Confidentiality is governed by 35 U.S.C. 122 and 37 CFR 1.14. This collection is estimated to take 2 hours to complete, including gathering, preparing, and submitting the completed application form to the USPTO. Time will vary depending upon the individual case. Any comments on the amount of time you require to complete this form and/or suggestions for reducing this burden, should be sent to the Chief Information Officer, U.S. Patent and Trademark Office, P.O. Box 1450, Alexandria, VA 22313-1450. DO NOT SEND FEES OR COMPLETED FORMS TO THIS ADDRESS. **SEND TO: Commissioner for Patents, P.O. Box 1450, Alexandria, VA 22313-1450**.

If you need assistance in completing the form, call 1-800-PTO-9199 (1-800-786-9199) and select option 2.

ALL REFERENCES CONSIDERED EXCEPT WHERE LINED THROUGH. /G.R.W/

PTO/SB/08 (09-06)
Approved for use through 03/31/2007. OMB 0651-0031
U.S. Patent and Trademark Office: U.S. DEPARTMENT OF COMMERCE

Under the Paperwork Reduction Act of 1995, no persons are required to respond to a collection of information unless it contains a valid OMB control number.

Substitute for form 1449/PTO

INFORMATION DISCLOSURE STATEMENT BY APPLICANT

Date Submitted: November 29, 2021

(use as many sheets as necessary)

Sheet 6 of 19

Complete if Known	
Application Number	To be determined
Filing Date	November 29, 2021
First Named Inventor	Yaron Brunner
Art Unit	To be determined
Examiner Name	To be determined
Attorney Docket Number	066749-3309

U.S. PATENT DOCUMENTS

Examiner Initials*	Cite No.[1]	Document Number	Publication Date MM-DD-YYYY	Name of Patentee or Applicant of Cited Document	Pages, Columns, Lines, Where Relevant
	A158	2005/0139745	06-30-2005	Liao, Chi-Cheng	
	A159	2005/0242144	11-03-2005	Panosian, Michael	
	A160	2006/0006770	01-12-2006	Valentini	
	A161	2006/0027475	02-09-2006	Gleason et al.	
	A162	2006/0038367	02-23-2006	Ferraro; Frank A.	
	A163	2006/0076261	04-13-2006	Kurtenbach	
	A164	2006/0119060	06-08-2006	Sullivan et al.	
	A165	2006/0186624	08-24-2006	Kady, Darren	
	A166	2006/0254946	11-16-2006	Becklin	
	A167	2007/0068757	03-29-2007	Tan	
	A168	2007/0090616	04-26-2007	Tompkins	
	A169	2007/0145700	06-28-2007	Ambrose et al.	
	A170	2007/0194543	08-23-2007	Duvigneau	
	A171	2008/0060953	03-13-2008	Ghassan	
	A172	2008/0104921	05-08-2008	Pervan; Darko	
	A173	2008/0115312	05-22-2008	DiPasquale et al.	
	A174	2008/0121547	05-29-2008	Dur et al.	
	A175	2008/0134607	06-12-2008	Pervan; Darko	
	A176	2008/0169739	07-17-2008	Goldenberg; Ruth	
	A177	2008/0271280	11-06-2008	FUCHS FRANK et al.	
	A178	2008/0277221	11-13-2008	Josefson; Mark L.	
	A179	2008/0296443	12-04-2008	Lunitz; Barbara	
	A180	2008/0308369	12-18-2008	Louis; Robert D.	
	A181	2009/0026901	01-29-2009	Nies, III et al.	
	A182	2009/0071990	03-19-2009	Jardine et al.	
	A183	2009/0127146	05-21-2009	Krebs; Kolja	
	A184	2009/0145790	06-11-2009	Panosian; Michael Harmik	
	A185	2009/0145866	06-11-2009	Panosian et al.	
	A186	2009/0145913	06-11-2009	Panosian et al.	
	A187	2009/0178946	07-16-2009	Patstone et al.	
	A188	2009/0236482	09-24-2009	~~SSS Storage Systems LLC~~	Winig et al.
	A189	2010/0052276	03-04-2010	Brunner	

Change(s) applied to document, /P.H./ 5/13/2022

Examiner Signature	/GIDEON R WEINERTH/	Date Considered	02/12/2022

EXAMINER: Initial if reference considered, whether or not citation is in conformance with MPEP 609. Draw line through citation if not in conformance and not considered. Include copy of this form with next communication to applicant. 1 Applicant's unique citation designation number (optional). 2 See Kinds Codes of USPTO Patent Documents at www.uspto.gov or MPEP 901.04. 3 Enter Office that issued the document, by the two-letter code (WIPO Standard ST.3). 4 For Japanese patent documents, the indication of the year of the reign of the Emperor must precede the serial number of the patent document. 5 Kind of document by the appropriate symbols as indicated on the document under WIPO Standard ST.16 if possible. 6 Applicant is to place a check mark here if English language Translation is attached.

This collection of information is required by 37 CFR 1.97 and 1.98. The information is required to obtain or retain a benefit by the public which is to file (and by the USPTO to process) an application. Confidentiality is governed by 35 U.S.C. 122 and 37 CFR 1.14. This collection is estimated to take 2 hours to complete, including gathering, preparing, and submitting the completed application form to the USPTO. Time will vary depending upon the individual case. Any comments on the amount of time you require to complete this form and/or suggestions for reducing this burden, should be sent to the Chief Information Officer, U.S. Patent and Trademark Office, P.O. Box 1450, Alexandria, VA 22313-1450. DO NOT SEND FEES OR COMPLETED FORMS TO THIS ADDRESS. **SEND TO: Commissioner for Patents, P.O. Box 1450, Alexandria, VA 22313-1450**.

If you need assistance in completing the form, call 1-800-PTO-9199 (1-800-786-9199) and select option 2.

ALL REFERENCES CONSIDERED EXCEPT WHERE LINED THROUGH. /G.R.W/

PTO/SB/08 (09-06)
Approved for use through 03/31/2007. OMB 0651-0031
U.S. Patent and Trademark Office: U.S. DEPARTMENT OF COMMERCE

Under the Paperwork Reduction Act of 1995, no persons are required to respond to a collection of information unless it contains a valid OMB control number.

Substitute for form 1449/PTO

INFORMATION DISCLOSURE STATEMENT BY APPLICANT

Date Submitted: November 29, 2021

(use as many sheets as necessary)

Sheet 4 of 19

Complete if Known	
Application Number	To be determined
Filing Date	November 29, 2021
First Named Inventor	Yaron Brunner
Art Unit	To be determined
Examiner Name	To be determined
Attorney Docket Number	066749-3309

U.S. PATENT DOCUMENTS

Examiner Initials*	Cite No.[1]	Document Number	Publication Date MM-DD-YYYY	Name of Patentee or Applicant of Cited Document	Pages, Columns, Lines, Where Relevant
	A95	8,028,845	10-04-2011	Himes	
	A96	8,132,819	03-13-2012	Landau; Eitan	
	A97	8,177,463	05-15-2012	Walker; Peter J	
	A98	8,191,910	06-05-2012	Landau et al.	
	A99	8,448,829	05-28-2013	Watanabe; Takata	
	A100	8,454,033	06-04-2013	Tsai	
	A101	8,459,495	06-11-2013	Koenig; Andreas	
	A102	8,505,729	08-13-2013	Sosnovsky et al.	
	A103	8,567,796	10-29-2013	Bar-Erez et al.	
	A104	8,602,217	12-10-2013	Sosnovsky et al.	
	A105	8,640,913	02-04-2014	Berendes	
	A106	8,677,661	03-25-2014	Michels; Markus	
	A107	8,689,396	04-08-2014	Melvin E. Wolfe	
	A108	8,714,355	05-06-2014	Huang	
	A109	8,813,960	08-26-2014	Fjelland; Douglas J.	
	A110	8,851,282	10-07-2014	Brunner	
	A111	8,875,888	11-04-2014	Koenig; Andreas	
	A112	8,925,752	01-06-2015	Smith	
	A113	8,979,100	03-17-2015	Bensman et al.	
	A114	8,985,922	03-24-2015	Neumann	
	A115	9,132,543	09-15-2015	Bar-Erez; Sharon	
	A116	9,506,489	11-29-2016	Ko; Kenneth H.	
	A117	9,511,491	12-06-2016	Brunner	
	A118	9,551,367	01-24-2017	Shieh	
	A119	9,566,990	02-14-2017	Bar-Erez; Sharon	
	A120	9,616,562	04-11-2017	Hoppe; Christopher S.	
Change(s) applied to document, /P.H./ 5/13/2022	A121	9,643,629	05-09-2017	The Stanley Works ~~Israel Ltd.~~	Bar-Erez et al.
	A122	9,701,443	07-11-2017	Wang; Tzu-Chien	
	A123	9,725,209	08-08-2017	Ben-Gigi	
	A124	9,850,029	12-26-2017	Brunner	
	A125	9,872,562	01-23-2018	Brunner; Varon	

Examiner Signature	/GIDEON R WEINERTH/	Date Considered	02/12/2022

*EXAMINER: Initial if reference considered, whether or not citation is in conformance with MPEP 609. Draw line through citation if not in conformance and not considered. Include copy of this form with next communication to applicant. 1 Applicant's unique citation designation number (optional). 2 See Kinds Codes of USPTO Patent Documents at www.uspto.gov or MPEP 901.04. 3 Enter Office that issued the document, by the two-letter code (WIPO Standard ST.3). 4 For Japanese patent documents, the indication of the year of the reign of the Emperor must precede the serial number of the patent document. 5 Kind of document by the appropriate symbols as indicated on the document under WIPO Standard ST.16 if possible. 6 Applicant is to place a check mark here if English language Translation is attached.

This collection of information is required by 37 CFR 1.97 and 1.98. The information is required to obtain or retain a benefit by the public which is to file (and by the USPTO to process) an application. Confidentiality is governed by 35 U.S.C. 122 and 37 CFR 1.14. This collection is estimated to take 2 hours to complete, including gathering, preparing, and submitting the completed application form to the USPTO. Time will vary depending upon the individual case. Any comments on the amount of time you require to complete this form and/or suggestions for reducing this burden, should be sent to the Chief Information Officer, U.S. Patent and Trademark Office, P.O. Box 1450, Alexandria, VA 22313-1450. DO NOT SEND FEES OR COMPLETED FORMS TO THIS ADDRESS. **SEND TO: Commissioner for Patents, P.O. Box 1450, Alexandria, VA 22313-1450**.

If you need assistance in completing the form, call 1-800-PTO-9199 (1-800-786-9199) and select option 2.

ALL REFERENCES CONSIDERED EXCEPT WHERE LINED THROUGH. /G.R.W/

PTO/SB/08 (09-06)
Approved for use through 03/31/2007. OMB 0651-0031
U.S. Patent and Trademark Office: U.S. DEPARTMENT OF COMMERCE

Under the Paperwork Reduction Act of 1995, no persons are required to respond to a collection of information unless it contains a valid OMB control number.

Substitute for form 1449/PTO

INFORMATION DISCLOSURE STATEMENT BY APPLICANT

Date Submitted: November 29, 2021

(use as many sheets as necessary)

Sheet 2 of 19

Complete if Known	
Application Number	To be determined
Filing Date	November 29, 2021
First Named Inventor	Yaron Brunner
Art Unit	To be determined
Examiner Name	To be determined
Attorney Docket Number	066749-3309

U.S. PATENT DOCUMENTS

Examiner Initials*	Cite No.[1]	Document Number	Publication Date MM-DD-YYYY	Name of Patentee or Applicant of Cited Document	Pages, Columns, Lines, Where Relevant
	A31	5,240,264	08-31-1993	Williams	
	A32	5,282,554	02-01-1994	Thomas; Jan B.	
	A33	5,301,829	04-12-1994	Chrisco	
	A34	5,325,966	07-05-1994	Chang	
	A35	5,356,038	10-18-1994	Banks	
	A36	5,356,105	10-18-1994	Andrews	
	A37	5,375,709	12-27-1994	Petro	
	A38	5,429,235	07-04-1995	Chen	
	A39	5,429,260	07-041995	Vallers; Gary L.	
	A40	5,433,416	07-18-1995	Johnson	
	A41	5,538,213	07-23-1996	Brown ~~Office Systems Inc.~~	
	A42	5,595,228	01-21-1997	Meisner et al.	
	A43	5,608,603	03-04-1997	Su	
	A44	5,622,296	04-22-1997	Pirhonen et al.	
	A45	5,628,443	05-13-1997	Deutsch	
	A46	5,653,366	08-05-1997	Liserre; Tony	
	A47	5,653,366	08-05-1997	Liserre	
	A48	5,664,292	09-09-1997	Chen	
	A49	5,775,046	07-07-1998	Fanger; David J.	
	A50	5,797,617	08-25-1998	Lin Shiou Chang	
	A51	5,850,996	12-22-1998	Liang	
	A52	5,890,613	04-06-1999	Williams; Warren Bret	
	A53	5,951,037	09-14-1999	Hsieh Hung-Ching	
	A54	5,957,421	09-28-1999	Barbour; Lee	
	A55	5,988,473	11-23-1999	Hagan et al.	
	A56	6,050,660	04-18-2000	Gurley	
	A57	6,082,539	07-04-2000	Lee	
	A58	6,082,687	07-04-2000	Kump et al.	
	A59	6,085,925	07-11-2000	Chung	
	A60	6,098,858	08-08-2000	Laugesen	
	A61	6,109,627	08-29-2000	Sung Haan Be	
	A62	6,176,559	01-23-2001	Tiramani et al.	

Change(s) applied to document, /P.H./ 5/13/2022

Examiner Signature	/GIDEON R WEINERTH/	Date Considered	02/12/2022

*EXAMINER: Initial if reference considered, whether or not citation is in conformance with MPEP 609. Draw line through citation if not in conformance and not considered. Include copy of this form with next communication to applicant. 1 Applicant's unique citation designation number (optional). 2 See Kinds Codes of USPTO Patent Documents at www.uspto.gov or MPEP 901.04. 3 Enter Office that issued the document, by the two-letter code (WIPO Standard ST.3). 4 For Japanese patent documents, the indication of the year of the reign of the Emperor must precede the serial number of the patent document. 5 Kind of document by the appropriate symbols as indicated on the document under WIPO Standard ST.16 if possible. 6 Applicant is to place a check mark here if English language Translation is attached.

This collection of information is required by 37 CFR 1.97 and 1.98. The information is required to obtain or retain a benefit by the public which is to file (and by the USPTO to process) an application. Confidentiality is governed by 35 U.S.C. 122 and 37 CFR 1.14. This collection is estimated to take 2 hours to complete, including gathering, preparing, and submitting the completed application form to the USPTO. Time will vary depending upon the individual case. Any comments on the amount of time you require to complete this form and/or suggestions for reducing this burden, should be sent to the Chief Information Officer, U.S. Patent and Trademark Office, P.O. Box 1450, Alexandria, VA 22313-1450. DO NOT SEND FEES OR COMPLETED FORMS TO THIS ADDRESS. **SEND TO: Commissioner for Patents, P.O. Box 1450, Alexandria, VA 22313-1450**.

If you need assistance in completing the form, call 1-800-PTO-9199 (1-800-786-9199) and select option 2.

ALL REFERENCES CONSIDERED EXCEPT WHERE LINED THROUGH. /G.R.W/

PTO/SB/08 (09-06)
Approved for use through 03/31/2007. OMB 0651-0031
U.S. Patent and Trademark Office: U.S. DEPARTMENT OF COMMERCE

Under the Paperwork Reduction Act of 1995, no persons are required to respond to a collection of information unless it contains a valid OMB control number.

Substitute for form 1449/PTO

INFORMATION DISCLOSURE STATEMENT BY APPLICANT

Date Submitted: November 29, 2021

(use as many sheets as necessary)

Sheet 9 of 19

Complete if Known	
Application Number	To be determined
Filing Date	November 29, 2021
First Named Inventor	Yaron Brunner
Art Unit	To be determined
Examiner Name	To be determined
Attorney Docket Number	066749-3309

U.S. PATENT DOCUMENTS

Examiner Initials*	Cite No.[1]	Document Number	Publication Date MM-DD-YYYY	Name of Patentee or Applicant of Cited Document	Pages, Columns, Lines, Where Relevant
	A247	2018/0099405	04-12-2018	Reinhart	
	A248	2018/0127007	05-10-2018	Kravchenko	
	A249	2018/0153312	06-07-2018	Buck James et al.	
	A250	2018/0161975	06-14-2018	Brunner; Varon	
	A251	2018/0186513	07-05-2018	Brunner	
	A252	2018/0213934	08-02-2018	Wolle et al.	
	A253	2018/0220758	08-09-2018	~~Rothenberger AG~~	Burchia
	A254	2018/0229889	08-16-2018	Li	
	A255	2018/0290288	10-11-2018	BRUNNER; Varon	
	A256	2019/0001482	01-03-2019	Wolle et al.	
	A257	2019/0002004	01-03-2019	BRUNNER; Varon	
	A258	2019/0031222	01-31-2019	TAKVAR et al.	
	A259	2019/0039781	02-07-2019	Kogel	
	A260	2019/0106244	04-11-2019	Brunner et al.	
	A261	2019/0168376	06-06-2019	BROCKET; Stephen	
	A262	2019/0225371	07-25-2019	Hoppe et al.	
	A263	2020/0029543	01-30-2020	Householder	
	A264	2020/0055534	02-20-2020	HASSELL	
	A265	2020/0147781	05-14-2020	Squiers et al.	
	A266	2020/0165036	05-28-2020	Squiers et al.	
	A267	2020/0243925	07-30-2020	Polakowski et al.	
	A268	2020/0299027	09-24-2020	Brunner et al.	
	A269	2020/0346819	11-05-2020	Kogel et al.	
	A270	2021/0025706	01-28-2021	Millane	
	A271	2021/0031975	02-04-2021	Brunner at el.	
	A272	2021/0039831	02-11-2021	Brunner at el.	
	A273	2021/0039831	02-11-2021	Brunner et al.	
	A274	2021/0155373	05-27-2021	Cai	
	A275	2021/0187725	06-24-2021	Brunner	
	A276	2021/0267368	09-02-2021	Bruins	
	A277	D232,798	09-17-1974	Roche et al.	
	A278	D285,986	10-07-1986	Huang	

Change(s) applied to document, /P.H./ 5/13/2022

Examiner Signature	/GIDEON R WEINERTH/	Date Considered	02/12/2022

*EXAMINER: Initial if reference considered, whether or not citation is in conformance with MPEP 609. Draw line through citation if not in conformance and not considered. Include copy of this form with next communication to applicant. 1 Applicant's unique citation designation number (optional). 2 See Kinds Codes of USPTO Patent Documents at www.uspto.gov or MPEP 901.04. 3 Enter Office that issued the document, by the two-letter code (WIPO Standard ST.3). 4 For Japanese patent documents, the indication of the year of the reign of the Emperor must precede the serial number of the patent document. 5 Kind of document by the appropriate symbols as indicated on the document under WIPO Standard ST.16 if possible. 6 Applicant is to place a check mark here if English language Translation is attached.

This collection of information is required by 37 CFR 1.97 and 1.98. The information is required to obtain or retain a benefit by the public which is to file (and by the USPTO to process) an application. Confidentiality is governed by 35 U.S.C. 122 and 37 CFR 1.14. This collection is estimated to take 2 hours to complete, including gathering, preparing, and submitting the completed application form to the USPTO. Time will vary depending upon the individual case. Any comments on the amount of time you require to complete this form and/or suggestions for reducing this burden, should be sent to the Chief Information Officer, U.S. Patent and Trademark Office, P.O. Box 1450, Alexandria, VA 22313-1450. DO NOT SEND FEES OR COMPLETED FORMS TO THIS ADDRESS. **SEND TO: Commissioner for Patents, P.O. Box 1450, Alexandria, VA 22313-1450**.

If you need assistance in completing the form, call 1-800-PTO-9199 (1-800-786-9199) and select option 2.

ALL REFERENCES CONSIDERED EXCEPT WHERE LINED THROUGH. /G.R.W/

PTO/SB/08 (09-06)
Approved for use through 03/31/2007. OMB 0651-0031
U.S. Patent and Trademark Office: U.S. DEPARTMENT OF COMMERCE

Under the Paperwork Reduction Act of 1995, no persons are required to respond to a collection of information unless it contains a valid OMB control number.

Substitute for form 1449/PTO

INFORMATION DISCLOSURE STATEMENT BY APPLICANT

Date Submitted: November 29, 2021

(use as many sheets as necessary)

Sheet 8 of 19

Complete if Known	
Application Number	To be determined
Filing Date	November 29, 2021
First Named Inventor	Yaron Brunner
Art Unit	To be determined
Examiner Name	To be determined
Attorney Docket Number	066749-3309

U.S. PATENT DOCUMENTS

Change(s) applied to document, /P.H./ 5/13/2022

Examiner Initials*	Cite No.[1]	Document Number	Publication Date MM-DD-YYYY	Name of Patentee or Applicant of Cited Document	Pages, Columns, Lines, Where Relevant
	A218	2013/146551	06-13-2013	~~Electrolux Home Prod Inc.~~	Simpson et al.
	A219	2014/0069832	03-13-2014	Roehm	
	A220	2014/0076759	03-20-2014	ROEHM et al.	
	A221	2014/0123478	05-08-2014	Gylander et al.	
	A222	2014/0161518	06-12-2014	KO	
	A223	2014/0166516	06-19-2014	Martinez; Mark R.	
	A224	2015/0014949	01-15-2015	Dittman	
	A225	2015/0034515	02-05-2015	Monyak et al.	
	A226	2015/0151427	06-04-2015	Ben-Gigi	
	A227	2015/0274362	10-01-2015	CHRISTOPHER et al.	
	A228	2015/0310842	10-29-2015	Coburn et al.	
	A229	2015/0376917	12-31-2015	Brunner	
	A230	2016/0023349	01-28-2016	Milwaukee ~~Electric Tool Corporation~~ Hoppe et al.	
	A231	2016/0130034	05-12-2016	Kuhls; Timo	
	A232	2016/0144500	05-26-2016	CHEN; KUN-CHEN	
	A233	2016/0168880	06-16-2016	Phelan; Matthew	
	A234	2016/0221177	08-04-2016	Reinhart	
	A235	2017/0121056	05-04-2017	Wang; Tzu-Chien	
	A236	2017/0138382	05-18-2017	Ko	
	A237	2017/0165828	06-15-2017	~~Festool GmbH~~ Fleischmann	
	A238	2017/0166352	06-15-2017	Hoppe; Christopher S.	
	A239	2017/0174392	06-22-2017	De Loynes	
	A240	2017/0217464	08-03-2017	Bar-erez et al.	
	A241	2017/0239808	08-24-2017	Hoppe; Christopher S.	
	A242	2017/0257958	09-07-2017	The Stanley Works ~~Israel Ltd.~~ Sabbag et al.	
	A243	2017/0266804	09-21-2017	Kinskey	
	A244	2017/0318927	11-09-2017	Krause et al.	
	A245	2017/0349013	12-07-2017	GRONHOLM	
	A246	2018/0044059	02-15-2018	BRUNNER; Varon	

Examiner Signature	/GIDEON R WEINERTH/	Date Considered	02/12/2022

*EXAMINER: Initial if reference considered, whether or not citation is in conformance with MPEP 609. Draw line through citation if not in conformance and not considered. Include copy of this form with next communication to applicant. 1 Applicant's unique citation designation number (optional). 2 See Kinds Codes of USPTO Patent Documents at www.uspto.gov or MPEP 901.04. 3 Enter Office that issued the document, by the two-letter code (WIPO Standard ST.3). 4 For Japanese patent documents, the indication of the year of the reign of the Emperor must precede the serial number of the patent document. 5 Kind of document by the appropriate symbols as indicated on the document under WIPO Standard ST.16 if possible. 6 Applicant is to place a check mark here if English language Translation is attached.

This collection of information is required by 37 CFR 1.97 and 1.98. The information is required to obtain or retain a benefit by the public which is to file (and by the USPTO to process) an application. Confidentiality is governed by 35 U.S.C. 122 and 37 CFR 1.14. This collection is estimated to take 2 hours to complete, including gathering, preparing, and submitting the completed application form to the USPTO. Time will vary depending upon the individual case. Any comments on the amount of time you require to complete this form and/or suggestions for reducing this burden, should be sent to the Chief Information Officer, U.S. Patent and Trademark Office, P.O. Box 1450, Alexandria, VA 22313-1450. DO NOT SEND FEES OR COMPLETED FORMS TO THIS ADDRESS. **SEND TO: Commissioner for Patents, P.O. Box 1450, Alexandria, VA 22313-1450**.

If you need assistance in completing the form, call 1-800-PTO-9199 (1-800-786-9199) and select option 2.

ALL REFERENCES CONSIDERED EXCEPT WHERE LINED THROUGH. /G.R.W/

PTO/SB/08 (09-06)
Approved for use through 03/31/2007. OMB 0651-0031
U.S. Patent and Trademark Office: U.S. DEPARTMENT OF COMMERCE

Under the Paperwork Reduction Act of 1995, no persons are required to respond to a collection of information unless it contains a valid OMB control number.

Substitute for form 1449/PTO

INFORMATION DISCLOSURE STATEMENT BY APPLICANT

Date Submitted: November 29, 2021

(use as many sheets as necessary)

Sheet 7 of 19

Complete if Known	
Application Number	To be determined
Filing Date	November 29, 2021
First Named Inventor	Yaron Brunner
Art Unit	To be determined
Examiner Name	To be determined
Attorney Docket Number	066749-3309

U.S. PATENT DOCUMENTS

Examiner Initials*	Cite No.[1]	Document Number	Publication Date MM-DD-YYYY	Name of Patentee or Applicant of Cited Document	Pages, Columns, Lines, Where Relevant
	A190	2010/0139566	06-10-2010	Lopuszanski, Michel	
	A191	2010/0147642	06-17-2010	Andochick; Scott E.	
	A192	2010/0176261	07-15-2010	Chen et al.	
	A193	2010/0219193	09-02-2010	Becklin	
	A194	2010/0224528	09-09-2010	Madsen	
	A195	2011/0073516	03-31-2011	Zelinskiy; Konstantin	
	A196	2011/0139665	06-16-2011	Madsen	
	A197	2011/0139777	06-16-2011	Sosnovsky et al.	
	A198	2011/0155613	06-30-2011	Koenig, Andreas et al.	
	A199	2011/017 4939	07/2011 ~~07-21-2013~~	~~Parts Express International Inc.~~ Taylor	
Change(s) applied to document, /P.H./ 5/13/2022	A200	2011/0181008	07-28-2011	BENSMAN;MARK	
	A201	2011/0220531	09-15-2011	Meether et al.	
	A202	2012/0074022	03-29-2012	McTavish et al.	
	A203	2012/0074158	03-29-2012	LAFLEUR; ANDRE	
	A204	2012/0152944	06-21-2012	Vilkomirski et al.	
	A205	2012/0160886	06-28-2012	Henny Paul et al.	
	A206	2012/0180250	07-19-2012	~~KAERCHER GMBH AND CO ALFRED KG~~	Ricklefsen et al.
	A207	2012/0207571	08-16-2012	Scott, Charles Shay	
	A208	2012/0292213	11-22-2012	Brunner	
	A209	2012/0326406	12-27-2012	LIFSHITZ; Omri	
	A210	2013/0024468	01-24-2013	Kocsis, Susan C.	
	A211	2013/0031731	02-07-2013	~~KAERCHER GMBH AND CO ALFRED KG~~ Hess	
	A212	2013/0031732	02-07-2013	~~KAERCHER GMBH AND CO ALFRED KG~~ Hess et al.	
	A213	2013/0068903	03-21-2013	~~Peerless Ind Inc.~~ O'Keene	
	A214	2013/0121783	05-16-2013	Kelly; Thomas P.	
	A215	2013/0127129	05-23-2013	Bensman, Mark et al.	
	A216	2013/0154218	06-20-2013	TIILIKAINEN	
	A217	2013/0223971	08-29-2013	Grace IV, Robert W.	

Examiner Signature	/GIDEON R WEINERTH/	Date Considered	02/12/2022

*EXAMINER: Initial if reference considered, whether or not citation is in conformance with MPEP 609. Draw line through citation if not in conformance and not considered. Include copy of this form with next communication to applicant. 1 Applicant's unique citation designation number (optional). 2 See Kinds Codes of USPTO Patent Documents at www.uspto.gov or MPEP 901.04. 3 Enter Office that issued the document, by the two-letter code (WIPO Standard ST.3). 4 For Japanese patent documents, the indication of the year of the reign of the Emperor must precede the serial number of the patent document. 5 Kind of document by the appropriate symbols as indicated on the document under WIPO Standard ST.16 if possible. 6 Applicant is to place a check mark here if English language Translation is attached.

This collection of information is required by 37 CFR 1.97 and 1.98. The information is required to obtain or retain a benefit by the public which is to file (and by the USPTO to process) an application. Confidentiality is governed by 35 U.S.C. 122 and 37 CFR 1.14. This collection is estimated to take 2 hours to complete, including gathering, preparing, and submitting the completed application form to the USPTO. Time will vary depending upon the individual case. Any comments on the amount of time you require to complete this form and/or suggestions for reducing this burden, should be sent to the Chief Information Officer, U.S. Patent and Trademark Office, P.O. Box 1450, Alexandria, VA 22313-1450. DO NOT SEND FEES OR COMPLETED FORMS TO THIS ADDRESS. **SEND TO: Commissioner for Patents, P.O. Box 1450, Alexandria, VA 22313-1450**.

If you need assistance in completing the form, call 1-800-PTO-9199 (1-800-786-9199) and select option 2.

ALL REFERENCES CONSIDERED EXCEPT WHERE LINED THROUGH. /G.R.W/

PTO/SB/08 (09-06)
Approved for use through 03/31/2007. OMB 0651-0031
U.S. Patent and Trademark Office: U.S. DEPARTMENT OF COMMERCE

Under the Paperwork Reduction Act of 1995, no persons are required to respond to a collection of information unless it contains a valid OMB control number.

Substitute for form 1449/PTO

INFORMATION DISCLOSURE STATEMENT BY APPLICANT

Date Submitted: November 29, 2021

(use as many sheets as necessary)

Sheet 6 of 19

Complete if Known	
Application Number	To be determined
Filing Date	November 29, 2021
First Named Inventor	Yaron Brunner
Art Unit	To be determined
Examiner Name	To be determined
Attorney Docket Number	066749-3309

U.S. PATENT DOCUMENTS

Examiner Initials*	Cite No.[1]	Document Number	Publication Date MM-DD-YYYY	Name of Patentee or Applicant of Cited Document	Pages, Columns, Lines, Where Relevant
	A158	2005/0139745	06-30-2005	Liao, Chi-Cheng	
	A159	2005/0242144	11-03-2005	Panosian, Michael	
	A160	2006/0006770	01-12-2006	Valentini	
	A161	2006/0027475	02-09-2006	Gleason et al.	
	A162	2006/0038367	02-23-2006	Ferraro; Frank A.	
	A163	2006/0076261	04-13-2006	Kurtenbach	
	A164	2006/0119060	06-08-2006	Sullivan et al.	
	A165	2006/0186624	08-24-2006	Kady, Darren	
	A166	2006/0254946	11-16-2006	Becklin	
	A167	2007/0068757	03-29-2007	Tan	
	A168	2007/0090616	04-26-2007	Tompkins	
	A169	2007/0145700	06-28-2007	Ambrose et al.	
	A170	2007/0194543	08-23-2007	Duvigneau	
	A171	2008/0060953	03-13-2008	Ghassan	
	A172	2008/0104921	05-08-2008	Pervan; Darko	
	A173	2008/0115312	05-22-2008	DiPasquale et al.	
	A174	2008/0121547	05-29-2008	Dur et al.	
	A175	2008/0134607	06-12-2008	Pervan; Darko	
	A176	2008/0169739	07-17-2008	Goldenberg; Ruth	
	A177	2008/0271280	11-06-2008	FUCHS FRANK et al.	
	A178	2008/0277221	11-13-2008	Josefson; Mark L.	
	A179	2008/0296443	12-04-2008	Lunitz; Barbara	
	A180	2008/0308369	12-18-2008	Louis; Robert D.	
	A181	2009/0026901	01-29-2009	Nies, Ill et al.	
	A182	2009/0071990	03-19-2009	Jardine et al.	
	A183	2009/0127146	05-21-2009	Krebs; Kolja	
	A184	2009/0145790	06-11-2009	Panosian; Michael Harmik	
	A185	2009/0145866	06-11-2009	Panosian et al.	
	A186	2009/0145913	06-11-2009	Panosian et al.	
	A187	2009/0178946	07-16-2009	Patstone et al.	
	A188	2009/0236482	09-24-2009	~~SSS Storage Systems LLC~~	Winig et al.
	A189	2010/0052276	03-04-2010	Brunner	

Change(s) applied to document, /P.H./ 5/13/2022

Examiner Signature	/GIDEON R WEINERTH/	Date Considered	02/12/2022

EXAMINER: Initial if reference considered, whether or not citation is in conformance with MPEP 609. Draw line through citation if not in conformance and not considered. Include copy of this form with next communication to applicant. 1 Applicant's unique citation designation number (optional). 2 See Kinds Codes of USPTO Patent Documents at www.uspto.gov or MPEP 901.04. 3 Enter Office that issued the document, by the two-letter code (WIPO Standard ST.3). 4 For Japanese patent documents, the indication of the year of the reign of the Emperor must precede the serial number of the patent document. 5 Kind of document by the appropriate symbols as indicated on the document under WIPO Standard ST.16 if possible. 6 Applicant is to place a check mark here if English language Translation is attached.

This collection of information is required by 37 CFR 1.97 and 1.98. The information is required to obtain or retain a benefit by the public which is to file (and by the USPTO to process) an application. Confidentiality is governed by 35 U.S.C. 122 and 37 CFR 1.14. This collection is estimated to take 2 hours to complete, including gathering, preparing, and submitting the completed application form to the USPTO. Time will vary depending upon the individual case. Any comments on the amount of time you require to complete this form and/or suggestions for reducing this burden, should be sent to the Chief Information Officer, U.S. Patent and Trademark Office, P.O. Box 1450, Alexandria, VA 22313-1450. DO NOT SEND FEES OR COMPLETED FORMS TO THIS ADDRESS. **SEND TO: Commissioner for Patents, P.O. Box 1450, Alexandria, VA 22313-1450**.

If you need assistance in completing the form, call 1-800-PTO-9199 (1-800-786-9199) and select option 2.

ALL REFERENCES CONSIDERED EXCEPT WHERE LINED THROUGH. /G.R.W/

PTO/SB/08 (09-06)
Approved for use through 03/31/2007. OMB 0651-0031
U.S. Patent and Trademark Office: U.S. DEPARTMENT OF COMMERCE

Under the Paperwork Reduction Act of 1995, no persons are required to respond to a collection of information unless it contains a valid OMB control number.

Substitute for form 1449/PTO

INFORMATION DISCLOSURE STATEMENT BY APPLICANT

Date Submitted: November 29, 2021

(use as many sheets as necessary)

Sheet 4 of 19

Complete if Known	
Application Number	To be determined
Filing Date	November 29, 2021
First Named Inventor	Yaron Brunner
Art Unit	To be determined
Examiner Name	To be determined
Attorney Docket Number	066749-3309

U.S. PATENT DOCUMENTS

Examiner Initials*	Cite No.[1]	Document Number	Publication Date MM-DD-YYYY	Name of Patentee or Applicant of Cited Document	Pages, Columns, Lines, Where Relevant
	A95	8,028,845	10-04-2011	Himes	
	A96	8,132,819	03-13-2012	Landau; Eitan	
	A97	8,177,463	05-15-2012	Walker; Peter J	
	A98	8,191,910	06-05-2012	Landau et al.	
	A99	8,448,829	05-28-2013	Watanabe; Takata	
	A100	8,454,033	06-04-2013	Tsai	
	A101	8,459,495	06-11-2013	Koenig; Andreas	
	A102	8,505,729	08-13-2013	Sosnovsky et al.	
	A103	8,567,796	10-29-2013	Bar-Erez et al.	
	A104	8,602,217	12-10-2013	Sosnovsky et al.	
	A105	8,640,913	02-04-2014	Berendes	
	A106	8,677,661	03-25-2014	Michels; Markus	
	A107	8,689,396	04-08-2014	Melvin E. Wolfe	
	A108	8,714,355	05-06-2014	Huang	
	A109	8,813,960	08-26-2014	Fjelland; Douglas J.	
	A110	8,851,282	10-07-2014	Brunner	
	A111	8,875,888	11-04-2014	Koenig; Andreas	
	A112	8,925,752	01-06-2015	Smith	
	A113	8,979,100	03-17-2015	Bensman et al.	
	A114	8,985,922	03-24-2015	Neumann	
	A115	9,132,543	09-15-2015	Bar-Erez; Sharon	
	A116	9,506,489	11-29-2016	Ko; Kenneth H.	
	A117	9,511,491	12-06-2016	Brunner	
	A118	9,551,367	01-24-2017	Shieh	
	A119	9,566,990	02-14-2017	Bar-Erez; Sharon	
	A120	9,616,562	04-11-2017	Hoppe; Christopher S.	
Change(s) applied to document, /P.H./ 5/13/2022	A121	9,643,629	05-09-2017	The Stanley Works ~~Israel Ltd.~~	Bar-Erez et al.
	A122	9,701,443	07-11-2017	Wang; Tzu-Chien	
	A123	9,725,209	08-08-2017	Ben-Gigi	
	A124	9,850,029	12-26-2017	Brunner	
	A125	9,872,562	01-23-2018	Brunner; Varon	

Examiner Signature	/GIDEON R WEINERTH/	Date Considered	02/12/2022

*EXAMINER: Initial if reference considered, whether or not citation is in conformance with MPEP 609. Draw line through citation if not in conformance and not considered. Include copy of this form with next communication to applicant. 1 Applicant's unique citation designation number (optional). 2 See Kinds Codes of USPTO Patent Documents at www.uspto.gov or MPEP 901.04. 3 Enter Office that issued the document, by the two-letter code (WIPO Standard ST.3). 4 For Japanese patent documents, the indication of the year of the reign of the Emperor must precede the serial number of the patent document. 5 Kind of document by the appropriate symbols as indicated on the document under WIPO Standard ST.16 if possible. 6 Applicant is to place a check mark here if English language Translation is attached.

This collection of information is required by 37 CFR 1.97 and 1.98. The information is required to obtain or retain a benefit by the public which is to file (and by the USPTO to process) an application. Confidentiality is governed by 35 U.S.C. 122 and 37 CFR 1.14. This collection is estimated to take 2 hours to complete, including gathering, preparing, and submitting the completed application form to the USPTO. Time will vary depending upon the individual case. Any comments on the amount of time you require to complete this form and/or suggestions for reducing this burden, should be sent to the Chief Information Officer, U.S. Patent and Trademark Office, P.O. Box 1450, Alexandria, VA 22313-1450. DO NOT SEND FEES OR COMPLETED FORMS TO THIS ADDRESS. **SEND TO: Commissioner for Patents, P.O. Box 1450, Alexandria, VA 22313-1450**.

If you need assistance in completing the form, call 1-800-PTO-9199 (1-800-786-9199) and select option 2.

ALL REFERENCES CONSIDERED EXCEPT WHERE LINED THROUGH. /G.R.W/

PTO/SB/08 (09-06)
Approved for use through 03/31/2007. OMB 0651-0031
U.S. Patent and Trademark Office: U.S. DEPARTMENT OF COMMERCE

Under the Paperwork Reduction Act of 1995, no persons are required to respond to a collection of information unless it contains a valid OMB control number.

Substitute for form 1449/PTO

INFORMATION DISCLOSURE STATEMENT BY APPLICANT

Date Submitted: November 29, 2021

(use as many sheets as necessary)

Sheet 2 of 19

Complete if Known	
Application Number	To be determined
Filing Date	November 29, 2021
First Named Inventor	Yaron Brunner
Art Unit	To be determined
Examiner Name	To be determined
Attorney Docket Number	066749-3309

U.S. PATENT DOCUMENTS

Examiner Initials*	Cite No.[1]	Document Number	Publication Date MM-DD-YYYY	Name of Patentee or Applicant of Cited Document	Pages, Columns, Lines, Where Relevant
	A31	5,240,264	08-31-1993	Williams	
	A32	5,282,554	02-01-1994	Thomas; Jan B.	
	A33	5,301,829	04-12-1994	Chrisco	
	A34	5,325,966	07-05-1994	Chang	
	A35	5,356,038	10-18-1994	Banks	
	A36	5,356,105	10-18-1994	Andrews	
	A37	5,375,709	12-27-1994	Petro	
	A38	5,429,235	07-04-1995	Chen	
	A39	5,429,260	07-041995	Vallers; Gary L.	
	A40	5,433,416	07-18-1995	Johnson	
	A41	5,538,213	07-23-1996	Brown ~~Office Systems Inc.~~	
	A42	5,595,228	01-21-1997	Meisner et al.	
	A43	5,608,603	03-04-1997	Su	
	A44	5,622,296	04-22-1997	Pirhonen et al.	
	A45	5,628,443	05-13-1997	Deutsch	
	A46	5,653,366	08-05-1997	Liserre; Tony	
	A47	5,653,366	08-05-1997	Liserre	
	A48	5,664,292	09-09-1997	Chen	
	A49	5,775,046	07-07-1998	Fanger; David J.	
	A50	5,797,617	08-25-1998	Lin Shiou Chang	
	A51	5,850,996	12-22-1998	Liang	
	A52	5,890,613	04-06-1999	Williams; Warren Bret	
	A53	5,951,037	09-14-1999	Hsieh Hung-Ching	
	A54	5,957,421	09-28-1999	Barbour; Lee	
	A55	5,988,473	11-23-1999	Hagan et al.	
	A56	6,050,660	04-18-2000	Gurley	
	A57	6,082,539	07-04-2000	Lee	
	A58	6,082,687	07-04-2000	Kump et al.	
	A59	6,085,925	07-11-2000	Chung	
	A60	6,098,858	08-08-2000	Laugesen	
	A61	6,109,627	08-29-2000	Sung Haan Be	
	A62	6,176,559	01-23-2001	Tiramani et al.	

Change(s) applied to document, /P.H./ 5/13/2022

Examiner Signature	/GIDEON R WEINERTH/	Date Considered	02/12/2022

*EXAMINER: Initial if reference considered, whether or not citation is in conformance with MPEP 609. Draw line through citation if not in conformance and not considered. Include copy of this form with next communication to applicant. 1 Applicant's unique citation designation number (optional). 2 See Kinds Codes of USPTO Patent Documents at www.uspto.gov or MPEP 901.04. 3 Enter Office that issued the document, by the two-letter code (WIPO Standard ST.3). 4 For Japanese patent documents, the indication of the year of the reign of the Emperor must precede the serial number of the patent document. 5 Kind of document by the appropriate symbols as indicated on the document under WIPO Standard ST.16 if possible. 6 Applicant is to place a check mark here if English language Translation is attached.

This collection of information is required by 37 CFR 1.97 and 1.98. The information is required to obtain or retain a benefit by the public which is to file (and by the USPTO to process) an application. Confidentiality is governed by 35 U.S.C. 122 and 37 CFR 1.14. This collection is estimated to take 2 hours to complete, including gathering, preparing, and submitting the completed application form to the USPTO. Time will vary depending upon the individual case. Any comments on the amount of time you require to complete this form and/or suggestions for reducing this burden, should be sent to the Chief Information Officer, U.S. Patent and Trademark Office, P.O. Box 1450, Alexandria, VA 22313-1450. DO NOT SEND FEES OR COMPLETED FORMS TO THIS ADDRESS. **SEND TO: Commissioner for Patents, P.O. Box 1450, Alexandria, VA 22313-1450**.

If you need assistance in completing the form, call 1-800-PTO-9199 (1-800-786-9199) and select option 2.

Issue Classification	Application/Control No.	Applicant(s)/Patent Under Reexamination
	17/536,521	Brunner et al.
	Examiner	**Art Unit**
	GIDEON R WEINERTH	3736

CPC						
Symbol					**Type**	**Version**
B65D	/	21	/	0223	F	2013-01-01
B25H	/	3	/	02	I	2013-01-01
A45C	/	5	/	14	I	2013-01-01
A45C	/	7	/	005	I	2013-01-01
A45F	/	3	/	10	I	2013-01-01
B25H	/	1	/	04	I	2013-01-01
A45C	/	13	/	02	I	2013-01-01
B25H	/	3	/	021	I	2013-01-01
B65D	/	21	/	0209	I	2013-01-01
B62B	/	1	/	14	I	2013-01-01
B65D	/	21	/	0228	I	2013-01-01
B65H	/	2701	/	533	A	2013-01-01
A45C	/	7	/	0045	A	2013-01-01
B25H	/	3	/	023	A	2013-01-01
B62B	/	5	/	067	A	2013-01-01
B65D	/	2255	/	00	A	2013-01-01

CPC Combination Sets								
Symbol					**Type**	**Set**	**Ranking**	**Version**
	/		/					

NONE		Total Claims Allowed:	
(Assistant Examiner)	(Date)	11	
/GIDEON R WEINERTH/ Examiner, Art Unit 3736	11 May 2022	O.G. Print Claim(s)	O.G. Print Figure
(Primary Examiner)	(Date)	1	1B

Issue Classification	Application/Control No.	Applicant(s)/Patent Under Reexamination
	17/536,521	Brunner et al.
	Examiner	**Art Unit**
	GIDEON R WEINERTH	3736

INTERNATIONAL CLASSIFICATION				
CLAIMED				
B65D	/	21	/	02
B65D	/	21	/	028
B62B	/	1	/	14
A45C	/	5	/	14
A45C	/	7	/	00
B25H	/	1	/	04
A45C	/	13	/	02
B65D	/	21	/	028
B25H	/	3	/	02
B62B	/	5	/	06

NON-CLAIMED				
	/		/	

US ORIGINAL CLASSIFICATION	
CLASS	**SUBCLASS**
206	501

CROSS REFERENCES(S)						
CLASS	**SUBCLASS (ONE SUBCLASS PER BLOCK)**					
206	504	508	511			
280	47.18					
220	4.27					

NONE (Assistant Examiner)	(Date)	**Total Claims Allowed:** 11	
/GIDEON R WEINERTH/ Examiner, Art Unit 3736 (Primary Examiner)	11 May 2022 (Date)	O.G. Print Claim(s) 1	O.G. Print Figure 1B

Issue Classification	Application/Control No.	Applicant(s)/Patent Under Reexamination
	17/536,521	Brunner et al.
	Examiner	**Art Unit**
	GIDEON R WEINERTH	3736

☐ Claims renumbered in the same order as presented by applicant ☐ CPA ☐ T.D. ☐ R.1.47

CLAIMS

Final	Original	Final	Original	Final	Original	Final	Original	Final	Original	Final	Original	Final	Original	Final	Original
	1		10		19	8	28								
	2		11		20	9	29								
	3		12	1	21	10	30								
	4		13	2	22	11	31								
	5		14	3	23										
	6		15	4	24										
	7		16	5	25										
	8		17	6	26										
	9		18	7	27										

NONE (Assistant Examiner)	(Date)	**Total Claims Allowed:** 11	
/GIDEON R WEINERTH/ Examiner, Art Unit 3736 (Primary Examiner)	11 May 2022 (Date)	O.G. Print Claim(s) 1	O.G. Print Figure 1B

U.S. Patent and Trademark Office

Part of Paper No.: 20220511

IN THE UNITED STATES PATENT AND TRADEMARK OFFICE

Applicant:	Milwaukee Electric Tool Corporation et al.
Title:	Utility Assembly and Coupling Mechanism
Appl. No.:	17/536,521
Filing Date:	November 29, 2021
Examiner:	WEINERTH, GIDEON R
Art Unit:	3736
Confirmation No.:	7250

ISSUE FEE TRANSMITTAL

Mail Stop Issue Fee
Commissioner for Patents
P.O. Box 1450
Alexandria, VA 22313-1450

Enclosed herewith please find Issue Fee Transmittal Form PTOL-85(B).

COMMENTS ON STATEMENT OF REASONS FOR ALLOWANCE

On page 2 of the Notice of Allowability dated May 4, 2022, the Examiner set forth various reasons for allowance. While the Applicant agrees that the allowed claims recite a combination of subject matter that is patentable over the cited references, the Applicant notes that the recited subject matter as well as various other subject matter and/or combinations of subject matter may be patentable for other reasons than those given by the Examiner. The Applicant expressly reserves the right to set forth additional and/or alternative reasons for patentability and/or allowance in connection with the present Application or in any other future proceeding.

REMARKS

These Comments on Statement of Reasons for Allowance under 37 C.F.R. § 1.104 are intended to be responsive to the Notice of Allowance dated May 4, 2022.

The requisite fees for payment of the Issue Fee are being charged to Deposit Account No. 18-0882.

The Commissioner is hereby authorized to charge any additional fees which may be required regarding this application under 37 C.F.R. §§ 1.16-1.17, or credit any overpayment, to Deposit Account No. 18-0882.

Respectfully submitted,

Date May 4, 2022

By /Derek H. Campbell/

Reinhart Boerner Van Deuren s.c.
Customer Number: 142078
Telephone: (414) 298-8374
Facsimile: (414) 298-8097

Derek H. Campbell
Attorney for Applicant
Registration No. 70,608

PART B - FEE(S) TRANSMITTAL

Complete and send this form, together with applicable fee(s), by mail or fax, or via EFS-Web.

By mail, send to: Mail Stop ISSUE FEE
Commissioner for Patents
P.O. Box 1450
Alexandria, Virginia 22313-1450

By fax, send to: (571)-273-2885

INSTRUCTIONS: This form should be used for transmitting the ISSUE FEE and PUBLICATION FEE (if required). Blocks 1 through 5 should be completed where appropriate. All further correspondence including the Patent, advance orders and notification of maintenance fees will be mailed to the current correspondence address as indicated unless corrected below or directed otherwise in Block 1, by (a) specifying a new correspondence address; and/or (b) indicating a separate "FEE ADDRESS" for maintenance fee notifications.

CURRENT CORRESPONDENCE ADDRESS (Note: Use Block 1 for any change of address)

142078 7590 05/04/2022
Reinhart (Milwaukee Tool)
ATTN: TRAVIS MCDONNELL, PARALEGAL
1000 NORTH WATER STREET
SUITE 2100
MILWAUKEE, WI 53202

Note: A certificate of mailing can only be used for domestic mailings of the Fee(s) Transmittal. This certificate cannot be used for any other accompanying papers. Each additional paper, such as an assignment or formal drawing, must have its own certificate of mailing or transmission.

Certificate of Mailing or Transmission

I hereby certify that this Fee(s) Transmittal is being deposited with the United States Postal Service with sufficient postage for first class mail in an envelope addressed to the Mail Stop ISSUE FEE address above, or being transmitted to the USPTO via EFS-Web or by facsimile to (571) 273-2885, on the date below.

(Typed or printed name)
(Signature)
(Date)

APPLICATION NO.	FILING DATE	FIRST NAMED INVENTOR	ATTORNEY DOCKET NO.	CONFIRMATION NO.
17/536,521	11/29/2021	Yaron Brunner	066749-3309	7250

TITLE OF INVENTION: UTILITY ASSEMBLY AND COUPLING MECHANISM

APPLN. TYPE	ENTITY STATUS	ISSUE FEE DUE	PUBLICATION FEE DUE	PREV. PAID ISSUE FEE	TOTAL FEE(S) DUE	DATE DUE
nonprovisional	UNDISCOUNTED	$1200	$0.00	$0.00	$1200	08/04/2022

EXAMINER	ART UNIT	CLASS-SUBCLASS
WEINERTH, GIDEON R	3736	220-004270

1. Change of correspondence address or indication of "Fee Address" (37 CFR 1.363).

❑ Change of correspondence address (or Change of Correspondence Address form PTO/AIA/122 or PTO/SB/122) attached.

❑ "Fee Address" indication (or "Fee Address" Indication form PTO/AIA/47 or PTO/SB/47; Rev 03-02 or more recent) attached. **Use of a Customer Number is required.**

2. For printing on the patent front page, list
(1) The names of up to 3 registered patent attorneys or agents OR, alternatively,
(2) The name of a single firm (having as a member a registered attorney or agent) and the names of up to 2 registered patent attorneys or agents. If no name is listed, no name will be printed.

1 Reinhart Boerner Van Deuren s.c.
2
3

3. ASSIGNEE NAME AND RESIDENCE DATA TO BE PRINTED ON THE PATENT (print or type)

PLEASE NOTE: Unless an assignee is identified below, no assignee data will appear on the patent. If an assignee is identified below, the document must have been previously recorded, or filed for recordation, as set forth in 37 CFR 3.11 and 37 CFR 3.81(a). Completion of this form is NOT a substitute for filing an assignment.

(A) NAME OF ASSIGNEE	(B) RESIDENCE: (CITY and STATE OR COUNTRY)
Milwaukee Electric Tool Corporation	Brookfield, Wisconsin
Keter Plastic LTD.	Herzelyia, Israel

Please check the appropriate assignee category or categories (will not be printed on the patent) : ❑ Individual ☒ Corporation or other private group entity ❑ Government

4a. Fees submitted: ☒ Issue Fee ❑ Publication Fee (if required) ❑ Advance Order - # of Copies _____

4b. Method of Payment: *(Please first reapply any previously paid fee shown above)*

☒ Electronic Payment via EFS-Web ❑ Enclosed check ❑ Non-electronic payment by credit card (Attach form PTO-2038)

☒ The Director is hereby authorized to charge the required fee(s), any deficiency, or credit any overpayment to Deposit Account No. 18-0882

5. **Change in Entity Status** (from status indicated above)

❑ Applicant certifying micro entity status. See 37 CFR 1.29

❑ Applicant asserting small entity status. See 37 CFR 1.27

❑ Applicant changing to regular undiscounted fee status.

NOTE: Absent a valid certification of Micro Entity Status (see forms PTO/SB/15A and 15B), issue fee payment in the micro entity amount will not be accepted at the risk of application abandonment.
NOTE: If the application was previously under micro entity status, checking this box will be taken to be a notification of loss of entitlement to micro entity status.
NOTE: Checking this box will be taken to be a notification of loss of entitlement to small or micro entity status, as applicable.

NOTE: This form must be signed in accordance with 37 CFR 1.31 and 1.33. See 37 CFR 1.4 for signature requirements and certifications.

Authorized Signature /Derek H. Campbell/ Date May 4, 2022

Typed or printed name Derek H. Campbell Registration No. 70,608

Electronic Patent Application Fee Transmittal

Application Number:	17536521
Filing Date:	29-Nov-2021
Title of Invention:	UTILITY ASSEMBLY AND COUPLING MECHANISM
First Named Inventor/Applicant Name:	Yaron Brunner
Filer:	Derek Howard Campbell/Sarah Sesterhenn-Lee
Attorney Docket Number:	066749-3309

Filed as Large Entity

Filing Fees for Utility under 35 USC 111(a)

Description	Fee Code	Quantity	Amount	Sub-Total in USD($)
Basic Filing:				
Pages:				
Claims:				
Miscellaneous-Filing:				
Petition:				
Patent-Appeals-and-Interference:				
Post-Allowance-and-Post-Issuance:				
UTILITY APPL ISSUE FEE	1501	1	1200	1200

Description	Fee Code	Quantity	Amount	Sub-Total in USD($)
Extension-of-Time:				
Miscellaneous:				
			Total in USD ($)	**1200**

Electronic Acknowledgement Receipt

EFS ID:	45631435
Application Number:	17536521
International Application Number:	
Confirmation Number:	7250
Title of Invention:	UTILITY ASSEMBLY AND COUPLING MECHANISM
First Named Inventor/Applicant Name:	Yaron Brunner
Customer Number:	142078
Filer:	Derek Howard Campbell/Sarah Sesterhenn-Lee
Filer Authorized By:	Derek Howard Campbell
Attorney Docket Number:	066749-3309
Receipt Date:	04-MAY-2022
Filing Date:	29-NOV-2021
Time Stamp:	17:21:30
Application Type:	Utility under 35 USC 111(a)

Payment information:

Submitted with Payment	yes
Payment Type	DA
Payment was successfully received in RAM	$1200
RAM confirmation Number	E202254H22034322
Deposit Account	180882
Authorized User	Sarah Sesterhenn-Lee

The Director of the USPTO is hereby authorized to charge indicated fees and credit any overpayment as follows:

37 CFR 1.16 (National application filing, search, and examination fees)

37 CFR 1.17 (Patent application and reexamination processing fees)

37 CFR 1.19 (Document supply fees)

37 CFR 1.20 (Post Issuance fees)

37 CFR 1.21 (Miscellaneous fees and charges)

File Listing:

Document Number	Document Description	File Name	File Size(Bytes)/ Message Digest	Multi Part /.zip	Pages (if appl.)
1	Transmittal Letter	066749-3309-Issue_Fee_Transmittal.pdf	82145 d81eb3df5306670f757ea5dad2c99ea82230085d	no	2
Warnings:					
Information:					
2	Issue Fee Payment (PTO-85B)	066749-3309_PTOL.pdf	100324 02f5660af7385363eb3c0ab43d67511b64642350	no	1
Warnings:					
Information:					
3	Fee Worksheet (SB06)	fee-info.pdf	38073 5124a615b8ad6edfe8481a04ae075f4bd901f0d7	no	2
Warnings:					
Information:					
		Total Files Size (in bytes):	220542		

This Acknowledgement Receipt evidences receipt on the noted date by the USPTO of the indicated documents, characterized by the applicant, and including page counts, where applicable. It serves as evidence of receipt similar to a Post Card, as described in MPEP 503.

New Applications Under 35 U.S.C. 111
If a new application is being filed and the application includes the necessary components for a filing date (see 37 CFR 1.53(b)-(d) and MPEP 506), a Filing Receipt (37 CFR 1.54) will be issued in due course and the date shown on this Acknowledgement Receipt will establish the filing date of the application.
National Stage of an International Application under 35 U.S.C. 371
If a timely submission to enter the national stage of an international application is compliant with the conditions of 35 U.S.C. 371 and other applicable requirements a Form PCT/DO/EO/903 indicating acceptance of the application as a national stage submission under 35 U.S.C. 371 will be issued in addition to the Filing Receipt, in due course.
New International Application Filed with the USPTO as a Receiving Office
If a new international application is being filed and the international application includes the necessary components for an international filing date (see PCT Article 11 and MPEP 1810), a Notification of the International Application Number and of the International Filing Date (Form PCT/RO/105) will be issued in due course, subject to prescriptions concerning national security, and the date shown on this Acknowledgement Receipt will establish the international filing date of the application.

UNITED STATES PATENT AND TRADEMARK OFFICE

UNITED STATES DEPARTMENT OF COMMERCE
United States Patent and Trademark Office
Address: COMMISSIONER FOR PATENTS
P.O. Box 1450
Alexandria, Virginia 22313-1450
www.uspto.gov

NOTICE OF ALLOWANCE AND FEE(S) DUE

142078 7590 05/04/2022
Reinhart (Milwaukee Tool)
ATTN: TRAVIS MCDONNELL, PARALEGAL
1000 NORTH WATER STREET
SUITE 2100
MILWAUKEE, WI 53202

EXAMINER
WEINERTH, GIDEON R

ART UNIT	PAPER NUMBER
3736	

DATE MAILED: 05/04/2022

APPLICATION NO.	FILING DATE	FIRST NAMED INVENTOR	ATTORNEY DOCKET NO.	CONFIRMATION NO.
17/536,521	11/29/2021	Yaron Brunner	066749-3309	7250

TITLE OF INVENTION: UTILITY ASSEMBLY AND COUPLING MECHANISM

APPLN. TYPE	ENTITY STATUS	ISSUE FEE DUE	PUBLICATION FEE DUE	PREV. PAID ISSUE FEE	TOTAL FEE(S) DUE	DATE DUE
nonprovisional	UNDISCOUNTED	$1200	$0.00	$0.00	$1200	08/04/2022

THE APPLICATION IDENTIFIED ABOVE HAS BEEN EXAMINED AND IS ALLOWED FOR ISSUANCE AS A PATENT. PROSECUTION ON THE MERITS IS CLOSED. THIS NOTICE OF ALLOWANCE IS NOT A GRANT OF PATENT RIGHTS. THIS APPLICATION IS SUBJECT TO WITHDRAWAL FROM ISSUE AT THE INITIATIVE OF THE OFFICE OR UPON PETITION BY THE APPLICANT. SEE 37 CFR 1.313 AND MPEP 1308.

THE ISSUE FEE AND PUBLICATION FEE (IF REQUIRED) MUST BE PAID WITHIN THREE MONTHS FROM THE MAILING DATE OF THIS NOTICE OR THIS APPLICATION SHALL BE REGARDED AS ABANDONED. THIS STATUTORY PERIOD CANNOT BE EXTENDED. SEE 35 U.S.C. 151. THE ISSUE FEE DUE INDICATED ABOVE DOES NOT REFLECT A CREDIT FOR ANY PREVIOUSLY PAID ISSUE FEE IN THIS APPLICATION. IF AN ISSUE FEE HAS PREVIOUSLY BEEN PAID IN THIS APPLICATION (AS SHOWN ABOVE), THE RETURN OF PART B OF THIS FORM WILL BE CONSIDERED A REQUEST TO REAPPLY THE PREVIOUSLY PAID ISSUE FEE TOWARD THE ISSUE FEE NOW DUE.

HOW TO REPLY TO THIS NOTICE:

I. Review the ENTITY STATUS shown above. If the ENTITY STATUS is shown as SMALL or MICRO, verify whether entitlement to that entity status still applies.

If the ENTITY STATUS is the same as shown above, pay the TOTAL FEE(S) DUE shown above.

If the ENTITY STATUS is changed from that shown above, on PART B - FEE(S) TRANSMITTAL, complete section number 5 titled "Change in Entity Status (from status indicated above)".

For purposes of this notice, small entity fees are 1/2 the amount of undiscounted fees, and micro entity fees are 1/2 the amount of small entity fees.

II. PART B - FEE(S) TRANSMITTAL, or its equivalent, must be completed and returned to the United States Patent and Trademark Office (USPTO) with your ISSUE FEE and PUBLICATION FEE (if required). If you are charging the fee(s) to your deposit account, section "4b" of Part B - Fee(s) Transmittal should be completed. If an equivalent of Part B is filed, a request to reapply a previously paid issue fee must be clearly made, and delays in processing may occur due to the difficulty in recognizing the paper as an equivalent of Part B.

III. All communications regarding this application must give the application number. Please direct all communications prior to issuance to Mail Stop ISSUE FEE unless advised to the contrary.

IMPORTANT REMINDER: Maintenance fees are due in utility patents issuing on applications filed on or after Dec. 12, 1980. It is patentee's responsibility to ensure timely payment of maintenance fees when due. More information is available at www.uspto.gov/PatentMaintenanceFees.

PART B - FEE(S) TRANSMITTAL

Complete and send this form, together with applicable fee(s), by mail or fax, or via EFS-Web.

By mail, send to: Mail Stop ISSUE FEE
Commissioner for Patents
P.O. Box 1450
Alexandria, Virginia 22313-1450

By fax, send to: (571)-273-2885

INSTRUCTIONS: This form should be used for transmitting the ISSUE FEE and PUBLICATION FEE (if required). Blocks 1 through 5 should be completed where appropriate. All further correspondence including the Patent, advance orders and notification of maintenance fees will be mailed to the current correspondence address as indicated unless corrected below or directed otherwise in Block 1, by (a) specifying a new correspondence address; and/or (b) indicating a separate "FEE ADDRESS" for maintenance fee notifications.

CURRENT CORRESPONDENCE ADDRESS (Note: Use Block 1 for any change of address)

142078 7590 05/04/2022
Reinhart (Milwaukee Tool)
ATTN: TRAVIS MCDONNELL, PARALEGAL
1000 NORTH WATER STREET
SUITE 2100
MILWAUKEE, WI 53202

Note: A certificate of mailing can only be used for domestic mailings of the Fee(s) Transmittal. This certificate cannot be used for any other accompanying papers. Each additional paper, such as an assignment or formal drawing, must have its own certificate of mailing or transmission.

Certificate of Mailing or Transmission

I hereby certify that this Fee(s) Transmittal is being deposited with the United States Postal Service with sufficient postage for first class mail in an envelope addressed to the Mail Stop ISSUE FEE address above, or being transmitted to the USPTO via EFS-Web or by facsimile to (571) 273-2885, on the date below.

(Typed or printed name)
(Signature)
(Date)

APPLICATION NO.	FILING DATE	FIRST NAMED INVENTOR	ATTORNEY DOCKET NO.	CONFIRMATION NO.
17/536,521	11/29/2021	Yaron Brunner	066749-3309	7250

TITLE OF INVENTION: UTILITY ASSEMBLY AND COUPLING MECHANISM

APPLN. TYPE	ENTITY STATUS	ISSUE FEE DUE	PUBLICATION FEE DUE	PREV. PAID ISSUE FEE	TOTAL FEE(S) DUE	DATE DUE
nonprovisional	UNDISCOUNTED	$1200	$0.00	$0.00	$1200	08/04/2022

EXAMINER	ART UNIT	CLASS-SUBCLASS
WEINERTH, GIDEON R	3736	220-004270

1. Change of correspondence address or indication of "Fee Address" (37 CFR 1.363).

❑ Change of correspondence address (or Change of Correspondence Address form PTO/AIA/122 or PTO/SB/122) attached.

❑ "Fee Address" indication (or "Fee Address" Indication form PTO/AIA/47 or PTO/SB/47; Rev 03-02 or more recent) attached. **Use of a Customer Number is required.**

2. For printing on the patent front page, list
(1) The names of up to 3 registered patent attorneys or agents OR, alternatively,
(2) The name of a single firm (having as a member a registered attorney or agent) and the names of up to 2 registered patent attorneys or agents. If no name is listed, no name will be printed.

1_____
2_____
3_____

3. ASSIGNEE NAME AND RESIDENCE DATA TO BE PRINTED ON THE PATENT (print or type)

PLEASE NOTE: Unless an assignee is identified below, no assignee data will appear on the patent. If an assignee is identified below, the document must have been previously recorded, or filed for recordation, as set forth in 37 CFR 3.11 and 37 CFR 3.81(a). Completion of this form is NOT a substitute for filing an assignment.

(A) NAME OF ASSIGNEE (B) RESIDENCE: (CITY and STATE OR COUNTRY)

Please check the appropriate assignee category or categories (will not be printed on the patent) : ❑ Individual ❑ Corporation or other private group entity ❑ Government

4a. Fees submitted: ❑Issue Fee ❑Publication Fee (if required) ❑Advance Order - # of Copies _____

4b. Method of Payment: *(Please first reapply any previously paid fee shown above)*

❑ Electronic Payment via EFS-Web ❑ Enclosed check ❑ Non-electronic payment by credit card (Attach form PTO-2038)

❑ The Director is hereby authorized to charge the required fee(s), any deficiency, or credit any overpayment to Deposit Account No. _____

5. **Change in Entity Status** (from status indicated above)

❑ Applicant certifying micro entity status. See 37 CFR 1.29

❑ Applicant asserting small entity status. See 37 CFR 1.27

❑ Applicant changing to regular undiscounted fee status.

NOTE: Absent a valid certification of Micro Entity Status (see forms PTO/SB/15A and 15B), issue fee payment in the micro entity amount will not be accepted at the risk of application abandonment.
NOTE: If the application was previously under micro entity status, checking this box will be taken to be a notification of loss of entitlement to micro entity status.
NOTE: Checking this box will be taken to be a notification of loss of entitlement to small or micro entity status, as applicable.

NOTE: This form must be signed in accordance with 37 CFR 1.31 and 1.33. See 37 CFR 1.4 for signature requirements and certifications.

Authorized Signature _____ Date _____

Typed or printed name _____ Registration No. _____

UNITED STATES DEPARTMENT OF COMMERCE
United States Patent and Trademark Office
Address: COMMISSIONER FOR PATENTS
P.O. Box 1450
Alexandria, Virginia 22313-1450
www.uspto.gov

APPLICATION NO.	FILING DATE	FIRST NAMED INVENTOR	ATTORNEY DOCKET NO.	CONFIRMATION NO.
17/536,521	11/29/2021	Yaron Brunner	066749-3309	7250

142078 7590 05/04/2022
Reinhart (Milwaukee Tool)
ATTN: TRAVIS MCDONNELL, PARALEGAL
1000 NORTH WATER STREET
SUITE 2100
MILWAUKEE, WI 53202

EXAMINER
WEINERTH, GIDEON R

ART UNIT	PAPER NUMBER
3736	

DATE MAILED: 05/04/2022

Determination of Patent Term Adjustment under 35 U.S.C. 154 (b)
(Applications filed on or after May 29, 2000)

The Office has discontinued providing a Patent Term Adjustment (PTA) calculation with the Notice of Allowance.

Section 1(h)(2) of the AIA Technical Corrections Act amended 35 U.S.C. 154(b)(3)(B)(i) to eliminate the requirement that the Office provide a patent term adjustment determination with the notice of allowance. See Revisions to Patent Term Adjustment, 78 Fed. Reg. 19416, 19417 (Apr. 1, 2013). Therefore, the Office is no longer providing an initial patent term adjustment determination with the notice of allowance. The Office will continue to provide a patent term adjustment determination with the Issue Notification Letter that is mailed to applicant approximately three weeks prior to the issue date of the patent, and will include the patent term adjustment on the patent. Any request for reconsideration of the patent term adjustment determination (or reinstatement of patent term adjustment) should follow the process outlined in 37 CFR 1.705.

Any questions regarding the Patent Term Extension or Adjustment determination should be directed to the Office of Patent Legal Administration at (571)-272-7702. Questions relating to issue and publication fee payments should be directed to the Customer Service Center of the Office of Patent Publication at 1-(888)-786-0101 or (571)-272-4200.

OMB Clearance and PRA Burden Statement for PTOL-85 Part B

The Paperwork Reduction Act (PRA) of 1995 requires Federal agencies to obtain Office of Management and Budget approval before requesting most types of information from the public. When OMB approves an agency request to collect information from the public, OMB (i) provides a valid OMB Control Number and expiration date for the agency to display on the instrument that will be used to collect the information and (ii) requires the agency to inform the public about the OMB Control Number's legal significance in accordance with 5 CFR 1320.5(b).

The information collected by PTOL-85 Part B is required by 37 CFR 1.311. The information is required to obtain or retain a benefit by the public which is to file (and by the USPTO to process) an application. Confidentiality is governed by 35 U.S.C. 122 and 37 CFR 1.14. This collection is estimated to take 30 minutes to complete, including gathering, preparing, and submitting the completed application form to the USPTO. Time will vary depending upon the individual case. Any comments on the amount of time you require to complete this form and/or suggestions for reducing this burden, should be sent to the Chief Information Officer, U.S. Patent and Trademark Office, U.S. Department of Commerce, P.O. Box 1450, Alexandria, Virginia 22313-1450. DO NOT SEND FEES OR COMPLETED FORMS TO THIS ADDRESS. SEND TO: Commissioner for Patents, P.O. Box 1450, Alexandria, Virginia 22313-1450. Under the Paperwork Reduction Act of 1995, no persons are required to respond to a collection of information unless it displays a valid OMB control number.

Privacy Act Statement

The Privacy Act of 1974 (P.L. 93-579) requires that you be given certain information in connection with your submission of the attached form related to a patent application or patent. Accordingly, pursuant to the requirements of the Act, please be advised that: (1) the general authority for the collection of this information is 35 U.S.C. 2(b)(2); (2) furnishing of the information solicited is voluntary; and (3) the principal purpose for which the information is used by the U.S. Patent and Trademark Office is to process and/or examine your submission related to a patent application or patent. If you do not furnish the requested information, the U.S. Patent and Trademark Office may not be able to process and/or examine your submission, which may result in termination of proceedings or abandonment of the application or expiration of the patent.

The information provided by you in this form will be subject to the following routine uses:

1. The information on this form will be treated confidentially to the extent allowed under the Freedom of Information Act (5 U.S.C. 552) and the Privacy Act (5 U.S.C 552a). Records from this system of records may be disclosed to the Department of Justice to determine whether disclosure of these records is required by the Freedom of Information Act.
2. A record from this system of records may be disclosed, as a routine use, in the course of presenting evidence to a court, magistrate, or administrative tribunal, including disclosures to opposing counsel in the course of settlement negotiations.
3. A record in this system of records may be disclosed, as a routine use, to a Member of Congress submitting a request involving an individual, to whom the record pertains, when the individual has requested assistance from the Member with respect to the subject matter of the record.
4. A record in this system of records may be disclosed, as a routine use, to a contractor of the Agency having need for the information in order to perform a contract. Recipients of information shall be required to comply with the requirements of the Privacy Act of 1974, as amended, pursuant to 5 U.S.C. 552a(m).
5. A record related to an International Application filed under the Patent Cooperation Treaty in this system of records may be disclosed, as a routine use, to the International Bureau of the World Intellectual Property Organization, pursuant to the Patent Cooperation Treaty.
6. A record in this system of records may be disclosed, as a routine use, to another federal agency for purposes of National Security review (35 U.S.C. 181) and for review pursuant to the Atomic Energy Act (42 U.S.C. 218(c)).
7. A record from this system of records may be disclosed, as a routine use, to the Administrator, General Services, or his/her designee, during an inspection of records conducted by GSA as part of that agency's responsibility to recommend improvements in records management practices and programs, under authority of 44 U.S.C. 2904 and 2906. Such disclosure shall be made in accordance with the GSA regulations governing inspection of records for this purpose, and any other relevant (i.e., GSA or Commerce) directive. Such disclosure shall not be used to make determinations about individuals.
8. A record from this system of records may be disclosed, as a routine use, to the public after either publication of the application pursuant to 35 U.S.C. 122(b) or issuance of a patent pursuant to 35 U.S.C. 151. Further, a record may be disclosed, subject to the limitations of 37 CFR 1.14, as a routine use, to the public if the record was filed in an application which became abandoned or in which the proceedings were terminated and which application is referenced by either a published application, an application open to public inspection or an issued patent.
9. A record from this system of records may be disclosed, as a routine use, to a Federal, State, or local law enforcement agency, if the USPTO becomes aware of a violation or potential violation of law or regulation.

Notice of Allowability	Application No. 17/536,521	Applicant(s) Brunner et al.	
	Examiner GIDEON R WEINERTH	Art Unit 3736	AIA (FITF) Status Yes

-- The MAILING DATE of this communication appears on the cover sheet with the correspondence address--

All claims being allowable, PROSECUTION ON THE MERITS IS (OR REMAINS) CLOSED in this application. If not included herewith (or previously mailed), a Notice of Allowance (PTOL-85) or other appropriate communication will be mailed in due course. **THIS NOTICE OF ALLOWABILITY IS NOT A GRANT OF PATENT RIGHTS.** This application is subject to withdrawal from issue at the initiative of the Office or upon petition by the applicant. See 37 CFR 1.313 and MPEP 1308.

1. ☑ This communication is responsive to 4/14/2022.
   ☐ A declaration(s)/affidavit(s) under **37 CFR 1.130(b)** was/were filed on _____.

2. ☐ An election was made by the applicant in response to a restriction requirement set forth during the interview on _____; the restriction requirement and election have been incorporated into this action.

3. ☑ The allowed claim(s) is/are 21-31 . As a result of the allowed claim(s), you may be eligible to benefit from the **Patent Prosecution Highway** program at a participating intellectual property office for the corresponding application. For more information, please see **http://www.uspto.gov/patents/init_events/pph/index.jsp** or send an inquiry to **PPHfeedback@uspto.gov.**

4. ☐ Acknowledgment is made of a claim for foreign priority under 35 U.S.C. § 119(a)-(d) or (f).

   Certified copies:

   a) ☐ All b) ☐ Some* c) ☐ None of the:

   1. ☐ Certified copies of the priority documents have been received.
   2. ☐ Certified copies of the priority documents have been received in Application No. _____ .
   3. ☐ Copies of the certified copies of the priority documents have been received in this national stage application from the International Bureau (PCT Rule 17.2(a)).

   * Certified copies not received: _____ .

Applicant has THREE MONTHS FROM THE "MAILING DATE" of this communication to file a reply complying with the requirements noted below. Failure to timely comply will result in ABANDONMENT of this application.
THIS THREE-MONTH PERIOD IS NOT EXTENDABLE.

5. ☐ CORRECTED DRAWINGS (as "replacement sheets") must be submitted.
   ☐ including changes required by the attached Examiner's Amendment / Comment or in the Office action of Paper No./Mail Date _____ .

   Identifying indicia such as the application number (see 37 CFR 1.84(c)) should be written on the drawings in the front (not the back) of each sheet. Replacement sheet(s) should be labeled as such in the header according to 37 CFR 1.121(d).

6. ☐ DEPOSIT OF and/or INFORMATION about the deposit of BIOLOGICAL MATERIAL must be submitted. Note the attached Examiner's comment regarding REQUIREMENT FOR THE DEPOSIT OF BIOLOGICAL MATERIAL.

Attachment(s)

1. ☑ Notice of References Cited (PTO-892)
2. ☑ Information Disclosure Statements (PTO/SB/08), Paper No./Mail Date 4/14/2022.
3. ☐ Examiner's Comment Regarding Requirement for Deposit of Biological Material _____.
4. ☐ Interview Summary (PTO-413), Paper No./Mail Date. _____.
5. ☐ Examiner's Amendment/Comment
6. ☑ Examiner's Statement of Reasons for Allowance
7. ☐ Other _____.

/GIDEON R WEINERTH/
Examiner, Art Unit 3736

Reasons for Allowance

1. The following is an examiner's statement of reasons for allowance: The claims incorporate the allowable subject matter of US 10583962 but further incorporate a toggle latch to close the pivoting lid. This represents an obvious variation to the previous patent and is overcome by the terminal disclaimer.

Any comments considered necessary by applicant must be submitted no later than the payment of the issue fee and, to avoid processing delays, should preferably accompany the issue fee. Such submissions should be clearly labeled "Comments on Statement of Reasons for Allowance."

Conclusion

Any inquiry concerning this communication or earlier communications from the examiner should be directed to GIDEON R. WEINERTH whose telephone number is (571)270-5121. The examiner can normally be reached Monday-Friday 10AM-6PM EST.

Examiner interviews are available via telephone, in-person, and video conferencing using a USPTO supplied web-based collaboration tool. To schedule an interview, applicant is encouraged to use the USPTO Automated Interview Request (AIR) at http://www.uspto.gov/interviewpractice.

If attempts to reach the examiner by telephone are unsuccessful, the examiner's supervisor, Greg Pickett can be reached on (571) 272-4560. The fax phone number for the organization where this application or proceeding is assigned is 571-273-8300.

Information regarding the status of published or unpublished applications may be obtained from Patent Center. Unpublished application information in Patent Center is

available to registered users. To file and manage patent submissions in Patent Center, visit: https://patentcenter.uspto.gov. Visit https://www.uspto.gov/patents/apply/patent-center for more information about Patent Center and https://www.uspto.gov/patents/docx for information about filing in DOCX format. For additional questions, contact the Electronic Business Center (EBC) at 866-217-9197 (toll-free). If you would like assistance from a USPTO Customer Service Representative, call 800-786-9199 (IN USA OR CANADA) or 571-272-1000.

/GIDEON R WEINERTH/
Examiner, Art Unit 3736

Notice of References Cited	Application/Control No. 17/536,521	Applicant(s)/Patent Under Reexamination Brunner et al.	
	Examiner GIDEON R WEINERTH	Art Unit 3736	Page 1 of 1

U.S. PATENT DOCUMENTS

*		Document Number Country Code-Number-Kind Code	Date MM-YYYY	Name	CPC Classification	US Classification
*	A	US-D649783-S	12-2011	Brunner; Yaron	H02J7/35	D3/279
*	B	US-20120073995-A1	03-2012	Parker; Linda K.	A45C13/10	206/1.5
*	C	US-20200078929-A1	03-2020	Liu; Ming-Hsien	B65D21/0223	1/1
*	D	US-20200165036-A1	05-2020	Squiers; Grant T.	A45F3/14	1/1
*	E	US-20200147781-A1	05-2020	Squiers; Grant T.	A45C7/005	1/1
*	F	US-20210104909-A1	04-2021	Mantych; Nicholas C.	H02J7/35	1/1
*	G	US-11066089-B2	07-2021	Brunner; Yaron	B62B5/049	1/1
*	H	US-11059631-B1	07-2021	Brunner; Yaron	B25H3/02	1/1
*	I	US-11283117-B2	03-2022	Polakowski; Matthew R.	H01M10/6572	1/1
	J					
	K					
	L					
	M					

FOREIGN PATENT DOCUMENTS

*		Document Number Country Code-Number-Kind Code	Date MM-YYYY	Country	Name	CPC Classification
	N					
	O					
	P					
	Q					
	R					
	S					
	T					

NON-PATENT DOCUMENTS

*		Include as applicable: Author, Title Date, Publisher, Edition or Volume, Pertinent Pages)
	U	
	V	
	W	
	X	

*A copy of this reference is not being furnished with this Office action. (See MPEP § 707.05(a).)
Dates in MM-YYYY format are publication dates. Classifications may be US or foreign.

Search Notes	Application/Control No.	Applicant(s)/Patent Under Reexamination
	17/536,521	Brunner et al.
	Examiner	**Art Unit**
	GIDEON R WEINERTH	3736

CPC - Searched*		
Symbol	**Date**	**Examiner**
A45C5/14	02/14/2022	GW
A45C7/005,0045	02/14/2022	GW
A45C13/02	02/14/2022	GW
A45F3/10	02/14/2022	GW
B25H1/04	02/14/2022	GW
B25H3/02,021,023	02/14/2022	GW
B62B1/14	02/14/2022	GW
B62B5/067	02/14/2022	GW
B65D21/0228,0223,0209,	02/14/2022	GW
B65D2255/00	02/14/2022	GW
B65H2701/533	02/14/2022	GW
Update search, cross ref search from co-pending applications	04/26/2022	GW

CPC Combination Sets - Searched*		
Symbol	**Date**	**Examiner**

US Classification - Searched*			
Class	**Subclass**	**Date**	**Examiner**
220	4.27	02/14/2022	GW

* See search history printout included with this form or the SEARCH NOTES box below to determine the scope of the search.

/GIDEON R WEINERTH/ Examiner, Art Unit 3736	/GIDEON R WEINERTH/ Examiner, Art Unit 3736

Search Notes	Application/Control No.	Applicant(s)/Patent Under Reexamination
	17/536,521	Brunner et al.
	Examiner	**Art Unit**
	GIDEON R WEINERTH	3736

Search Notes		
Search Notes	**Date**	**Examiner**
Update search, inventor search, cross reference search from co-pending applications to same inventor	02/14/2022	GW
Update inventor, assignee search	04/26/2022	GW

Interference Search			
US Class/CPC Symbol	**US Subclass/CPC Group**	**Date**	**Examiner**
220	4.27	04/27/2022	GW
A45C5	14	04/27/2022	GW
A45C7	005,0045	04/27/2022	GW
A45C13	02	04/27/2022	GW
A45F3	10	04/27/2022	GW
B25H1	04	04/27/2022	GW
B25H3	02,021,023	04/27/2022	GW
B62B1	14	04/27/2022	GW
B62B5	067	04/27/2022	GW
B65D21	0228,0223,0209,	04/27/2022	GW
B65D2255	00	04/27/2022	GW
B65H2701	533	04/27/2022	GW

/GIDEON R WEINERTH/ Examiner, Art Unit 3736	/GIDEON R WEINERTH/ Examiner, Art Unit 3736

Index of Claims	Application/Control No.	Applicant(s)/Patent Under Reexamination
	17/536,521	Brunner et al.
	Examiner	**Art Unit**
	GIDEON R WEINERTH	3736

✓	Rejected	-	Cancelled	N	Non-Elected	A	Appeal
=	Allowed	÷	Restricted	I	Interference	O	Objected

CLAIMS

☐ Claims renumbered in the same order as presented by applicant ☐ CPA ☐ T.D. ☐ R.1.47

CLAIM		DATE								
Final	Original	02/15/2022	04/27/2022							
	21	✓	=							
	22	✓	=							
	23	✓	=							
	24	✓	=							
	25	✓	=							
	26	✓	=							
	27	✓	=							
	28	✓	=							
	29	✓	=							
	30	✓	=							
	31	✓	=							

Issue Classification	Application/Control No.	Applicant(s)/Patent Under Reexamination
	17/536,521	Brunner et al.
	Examiner	**Art Unit**
	GIDEON R WEINERTH	3736

CPC						
Symbol					**Type**	**Version**
B65D	/	21	/	0223	F	2013-01-01
B25H	/	3	/	02	I	2013-01-01
A45C	/	5	/	14	I	2013-01-01
A45C	/	7	/	005	I	2013-01-01
A45F	/	3	/	10	I	2013-01-01
B25H	/	1	/	04	I	2013-01-01
A45C	/	13	/	02	I	2013-01-01
B25H	/	3	/	021	I	2013-01-01
B65D	/	21	/	0209	I	2013-01-01
B62B	/	1	/	14	I	2013-01-01
B65D	/	21	/	0228	I	2013-01-01
B65H	/	2701	/	533	A	2013-01-01
A45C	/	7	/	0045	A	2013-01-01
B25H	/	3	/	023	A	2013-01-01
B62B	/	5	/	067	A	2013-01-01
B65D	/	2255	/	00	A	2013-01-01

CPC Combination Sets								
Symbol					**Type**	**Set**	**Ranking**	**Version**
	/		/					

NONE		Total Claims Allowed:	
(Assistant Examiner)	(Date)	11	
/GIDEON R WEINERTH/ Examiner, Art Unit 3736	27 April 2022	O.G. Print Claim(s)	O.G. Print Figure
(Primary Examiner)	(Date)	1	1B

Issue Classification	Application/Control No.	Applicant(s)/Patent Under Reexamination
	17/536,521	Brunner et al.
	Examiner	**Art Unit**
	GIDEON R WEINERTH	3736

INTERNATIONAL CLASSIFICATION				
CLAIMED				
B65D	/	21	/	02
B65D	/	21	/	028
B62B	/	1	/	14
A45C	/	5	/	14
A45C	/	7	/	00
B25H	/	1	/	04
A45C	/	13	/	02
B65D	/	21	/	028
B25H	/	3	/	02
B62B	/	5	/	06

NON-CLAIMED				
	/		/	

US ORIGINAL CLASSIFICATION	
CLASS	**SUBCLASS**
206	501

CROSS REFERENCES(S)						
CLASS	**SUBCLASS (ONE SUBCLASS PER BLOCK)**					
206	504	508	511			
280	47.18					
220	4.27					

NONE (Assistant Examiner)	(Date)	**Total Claims Allowed:** 11	
/GIDEON R WEINERTH/ Examiner, Art Unit 3736 (Primary Examiner)	27 April 2022 (Date)	O.G. Print Claim(s) 1	O.G. Print Figure 1B

Issue Classification	Application/Control No.	Applicant(s)/Patent Under Reexamination
	17/536,521	Brunner et al.
	Examiner	**Art Unit**
	GIDEON R WEINERTH	3736

☐ Claims renumbered in the same order as presented by applicant ☐ CPA ☐ T.D. ☐ R.1.47

CLAIMS

Final	Original	Final	Original	Final	Original	Final	Original	Final	Original	Final	Original	Final	Original	Final	Original
	1		10		19	8	28								
	2		11		20	9	29								
	3		12	1	21	10	30								
	4		13	22	22	11	31								
	5		14	3	23										
	6		15	4	24										
	7		16	5	25										
	8		17	6	26										
	9		18	7	27										

NONE (Assistant Examiner)	(Date)	**Total Claims Allowed:** 11	
/GIDEON R WEINERTH/ Examiner, Art Unit 3736 (Primary Examiner)	27 April 2022 (Date)	O.G. Print Claim(s) 1	O.G. Print Figure 1B

Bibliographic Data

Application No: 17/536,521

Foreign Priority claimed: ○ Yes ◉ No

35 USC 119 (a-d) conditions met: ☐ Yes ☑ No ☐ Met After Allowance

Verified and Acknowledged: /GIDEON R WEINERTH/ (Examiner's Signature) G.R.W (Initials)

Title: Utility Assembly and Coupling Mechanism

FILING or 371(c) DATE	CLASS	GROUP ART UNIT	ATTORNEY DOCKET NO.
11/29/2021 **RULE**	220	3736	066749-3309

APPLICANTS

Milwaukee Electric Tool Corporation, Brookfield, WI, UNITED STATES

Keter Plastic LTD., Herzelyia, ISRAEL

INVENTORS

Yaron Brunner, Kibbutz Gvat, ISRAEL

Grant T. Squiers, Cudahy, WI, UNITED STATES

Christopher S. Hoppe, Cedarburg, WI, UNITED STATES

Steven W. Hyma, Milwaukee, WI, UNITED STATES

CONTINUING DATA

This application is a CON of 17391904 08/02/2021 PAT 11192690

17391904 is a CON of 17132609 12/23/2020

17132609 is a CON of 17064371 10/06/2020

17064371 is a CON of 16752441 01/24/2020 PAT 11008136

16752441 is a CON of 16216724 12/11/2018 PAT 10583962

16216724 is a CON of 15826232 11/29/2017 PAT 10703534

15826232 is a CON of PCT/IL2017/050481 04/30/2017

PCT/IL2017/050481 has PRO of 62459076 02/15/2017

PCT/IL2017/050481 has PRO of 62330334 05/02/2016

FOREIGN APPLICATIONS

IF REQUIRED, FOREIGN LICENSE GRANTED**

12/08/2021

STATE OR COUNTRY

ISRAEL

ADDRESS

Reinhart (Milwaukee Tool)
ATTN: TRAVIS MCDONNELL, PARALEGAL
1000 NORTH WATER STREET
SUITE 2100
MILWAUKEE, WI 53202
UNITED STATES

FILING FEE RECEIVED

$6,160

Under the Paperwork Reduction Act of 1995, no persons are required to respond to a collection of information unless it contains a valid OMB control number.

Substitute for form 1449/PTO

INFORMATION DISCLOSURE STATEMENT BY APPLICANT

Date Submitted: April 14, 2022

(use as many sheets as necessary)

Sheet	1	of	1

Complete if Known	
Application Number	17/536,521
Filing Date	November 29, 2021
First Named Inventor	Yaron Brunner
Art Unit	3736
Examiner Name	WEINERTH, GIDEON R
Attorney Docket Number	066749-3309

U.S. PATENT DOCUMENTS

Examiner Initials*	Cite No.[1]	Document Number Number-Kind Code[2] (*if known*)	Publication Date MM-DD-YYYY	Name of Patentee or Applicant of Cited Document	Pages, Columns, Lines, Where Relevant Passages or Relevant Figures Appear
/G.R.W/	A1	5,035,389	07-30-1991	Wang	
/G.R.W/	A2	2021/0094600	04-01-2021	Brunner et al.	
/G.R.W/	A3	D920,671	06-01-2021	Brunner et al.	
/G.R.W/	A4	D932,186	10-05-2021	Brunner et al.	
/G.R.W/	A5	D936,030	11-16-2021	Lee et al.	

UNPUBLISHED U.S. PATENT APPLICATION DOCUMENTS

Examiner Initials*	Cite No.[1]	U.S. Patent Application Document Serial Number-Kind Code[2] (*if known*)	Filing Date of Cited Document MM-DD-YYYY	Name of Patentee or Applicant of Cited Document	Pages, Columns, Lines, Where Relevant Passages or Relevant Figures Appear

FOREIGN PATENT DOCUMENTS

Examiner Initials*	Cite No.[1]	Foreign Patent Document Country Code[3]-Number[4]-Kind Code[5] (*if known*)	Publication Date MM-DD-YYYY	Name of Patentee or Applicant of Cited Documents	Pages, Columns, Lines, Where Relevant Passages or Relevant Figures Appear	T[6]

NON PATENT LITERATURE DOCUMENTS

Examiner Initials*	Cite No.[1]	Include name of the author (in CAPITAL LETTERS), title of the article (when appropriate), title of the item (book, magazine, journal, serial, symposium, catalog, etc.) date, page(s), volume-issue number(s), publisher, city and/or country where published.	T[6]

Examiner Signature	/GIDEON R WEINERTH/	Date Considered	04/26/2022

*EXAMINER: Initial if reference considered, whether or not citation is in conformance with MPEP 609. Draw line through citation if not in conformance and not considered. Include copy of this form with next communication to applicant. 1 Applicant's unique citation designation number (optional). 2 See Kinds Codes of USPTO Patent Documents at www.uspto.gov or MPEP 901.04. 3 Enter Office that issued the document, by the two-letter code (WIPO Standard ST.3). 4 For Japanese patent documents, the indication of the year of the reign of the Emperor must precede the serial number of the patent document. 5 Kind of document by the appropriate symbols as indicated on the document under WIPO Standard ST.16 if possible. 6 Applicant is to place a check mark here if English language Translation is attached.

This collection of information is required by 37 CFR 1.97 and 1.98. The information is required to obtain or retain a benefit by the public which is to file (and by the USPTO to process) an application. Confidentiality is governed by 35 U.S.C. 122 and 37 CFR 1.14. This collection is estimated to take 2 hours to complete, including gathering, preparing, and submitting the completed application form to the USPTO. Time will vary depending upon the individual case. Any comments on the amount of time you require to complete this form and/or suggestions for reducing this burden, should be sent to the Chief Information Officer, U.S. Patent and Trademark Office, P.O. Box 1450, Alexandria, VA 22313-1450. DO NOT SEND FEES OR COMPLETED FORMS TO THIS ADDRESS. **SEND TO: Commissioner for Patents, P.O. Box 1450, Alexandria, VA 22313-1450**.

If you need assistance in completing the form, call 1-800-PTO-9199 (1-800-786-9199) and select option 2.

EAST Search History

EAST Search History (Prior Art)

Ref #	Hits	Search Query	DBs	Default Operator	Plurals	Time Stamp
L2	12	(US-20110139665-$).did. or (US-D941020-$ or US-D936030-$ or US-D932186-$ or US-D920671-$ or US-D918584-$ or US-D919296-$ or US-D897103-$ or US-D437484-$ or US-5429260-$ or US-11283117-$ or US-D649783-$).did.	US-PGPUB; USPAT	OR	ON	2022/04/27 21:45
L4	22	("11155382" | "11230410" | "20020030425" | "20030075468" | "20070273114" | "20090288970" | "20140062042" | "20140197059" | "20160213115" | "20170158216" | "20210221561" | "20210316909" | "D437484" | "D876833" | "D897103" | "D918584" | "D919296" | "D920671" | "D932186" | "D936030" | "D941020" | "RE47022").PN.	US-PGPUB; USPAT; USOCR	OR	ON	2022/04/27 21:46
L5	37	(US-20210316909-$ or US-20210221561-$ or US-20170158216-$ or US-20160213115-$ or US-20140197059-$ or US-20140062042-$ or US-20090288970-$ or US-20070273114-$ or US-20030075468-$ or US-20020030425-$ or US-20180220758-$ or US-20110139665-$ or US-20070090616-$ or US-20200165036-$ or US-20150114777-$ or US-20120073995-$ or US-20200147781-$ or US-20200078929-$ or US-20210104909-$).did. or (US-11230410-$ or US-D941020-$ or US-D936030-$ or US-11155382-$ or US-D932186-$ or US-D920671-$ or US-D918584-$ or US-D919296-$ or US-D897103-$ or US-D876833-$ or US-RE47022-$ or US-D437484-$ or US-5429260-$ or US-10750833-$ or US-11283117-$ or US-11066089-$ or US-11059631-$ or US-D649783-$).did.	US-PGPUB; USPAT	OR	ON	2022/04/27 21:46
L7	15	L5 not L4	US-PGPUB; USPAT; USOCR	OR	ON	2022/04/27 21:46
L8	3	Brunner.inv. and (rib near (back adj wall))	US-PGPUB; USPAT; USOCR	OR	ON	2022/04/27 21:49
S1	24	(US-0006542-$ | US-0149754-$ | US-0165482-$ | US-0280523-$ | US-2386343-$ | US-20040149754-$ | US-20060165482-$ |	US-PGPUB;	OR	ON	2022/02/12 22:43

		US-20070006542-$ | US-20080280523-$ | US-3552817-$ | US-3851936-$ | US-4564732-$ | US-4660725-$ | US-5154291-$ | US-5454634-$ | US-6371321-$ | US-7350648-$ | US-8894160-$).DID.	USPAT; USOCR			
S2	360	(("0495537") or ("0509839") or ("1081378") or ("1084360") or ("2042387") or ("2124541") or ("2430200") or ("2939613") or ("2970358") or ("3117692") or ("3225865") or ("3423786") or ("3424334") or ("3506321") or ("3514170") or ("3743372") or ("3935613") or ("3974898") or ("3999818") or ("4122925") or ("4168076") or ("4243279") or ("4673070") or ("4805859") or ("4817237") or ("4929973") or ("4971201") or ("5035445") or ("5098235") or ("5105947") or ("5240264") or ("5282554") or ("5301829") or ("5325966") or ("5356038") or ("5356105") or ("5375709") or ("5429235") or ("5429260") or ("5433416") or ("5538213") or ("5595228") or ("5608603") or ("5622296") or ("5628443") or ("5653366") or ("5653366") or ("5664292") or ("5775046") or ("5797617") or ("5850996") or ("5890613") or ("5951037") or ("5957421") or ("5988473") or ("6050660") or ("6082539") or ("6082687") or ("6085925") or ("6098858") or ("6109627") or ("6176559") or ("6305498") or ("6347847") or ("6367631") or ("6371320") or ("6371424") or ("6431580") or ("6547347") or ("6601930") or ("6619772") or ("6637707") or ("6641013") or ("6889838") or ("6945546") or ("6948691") or ("6983946") or ("7044484") or ("7066475") or ("7077372") or ("7090085") or ("7147243") or ("7152752") or ("7172164") or ("7219969") or ("7263742") or ("7367571") or ("7503569") or ("7658887") or ("7690856") or ("7779764") or ("7780026") or ("7837165") or ("7841144") or ("8028845") or ("8132819") or ("8177463") or ("8191910") or ("8448829") or ("8454033") or ("8459495") or ("8505729") or ("8567796") or ("8602217") or ("8640913") or ("8677661") or ("8689396") or ("8714355") or ("8813960") or ("8851282") or ("8875888") or ("8925752") or ("8979100") or ("8985922") or ("9132543") or ("9506489") or ("9511491") or ("9551367")	US-PGPUB; USPAT; USOCR	OR	OFF	2022/02/12 22:53

		or ("9566990") or ("9616562") or ("9643629") or ("9701443") or ("9725209") or ("9850029") or ("9872562") or ("9888752") or ("10106180") or ("10222172") or ("10434638") or ("10583962") or ("10603783") or ("10703534") or ("10750833") or ("10758065") or ("10793172") or ("10829269") or ("10933501") or ("10933501") or ("10962218") or ("10981696") or ("11008136") or ("11059631") or ("20020000440") or ("20020125072") or ("20020171228") or ("20030094392") or ("20030094393") or ("20030115715")).PN. or (("20030146589") or ("20030184034") or ("20030205877") or ("20040103494") or ("20040195793") or ("20040206656") or ("20050015928") or ("20050062244") or ("20050104308") or ("20050139745") or ("20050242144") or ("20060006770") or ("20060027475") or ("20060038367") or ("20060076261") or ("20060119060") or ("20060186624") or ("20060254946") or ("20070068757") or ("20070090616") or ("20070145700") or ("20070194543") or ("20080060953") or ("20080104921") or ("20080115312") or ("20080121547") or ("20080134607") or ("20080169739") or ("20080271280") or ("20080277221") or ("20080296443") or ("20080308369") or ("20090026901") or ("20090071990") or ("20090127146") or ("20090145790") or ("20090145866") or ("20090145913") or ("20090178946") or ("20090236482") or ("20100052276") or ("20100139566") or ("20100147642") or ("20100176261") or ("20100219193") or ("20100224528") or ("20110073516") or ("20110139665") or ("20110139777") or ("20110155613") or ("20110174939") or ("20110181008") or ("20110220531") or ("20120074022") or ("20120074158") or ("20120152944") or ("20120160886") or ("20120180250") or ("20120207571") or ("20120292213") or ("20120326406") or ("20130024468") or ("20130031731") or ("20130031732") or ("20130068903") or ("20130121783") or ("20130127129") or ("20130154218") or ("20130223971") or ("2013146551") or ("20140069832") or ("20140076759") or ("20140123478") or ("20140161518") or ("20140166516") or ("20150014949") or ("20150034515") or				

		("20150151427") or ("20150274362") or ("20150310842") or ("20150376917") or ("20160023349") or ("20160130034") or ("20160144500") or ("20160168880") or ("20160221177") or ("20170121056") or ("20170138382") or ("20170165828") or ("20170166352") or ("20170174392") or ("20170217464") or ("20170239808") or ("20170257958") or ("20170266804") or ("20170318927") or ("20170349013") or ("20180044059") or ("20180099405") or ("20180127007") or ("20180153312") or ("20180161975") or ("20180186513") or ("20180213934") or ("20180220758") or ("20180229889") or ("20180290288") or ("20190001482") or ("20190002004") or ("20190031222") or ("20190039781") or ("20190106244") or ("20190168376") or ("20190225371") or ("20200029543") or ("20200055534") or ("20200147781") or ("20200165036") or ("20200243925")).PN. or (("20200299027") or ("20200346819") or ("20210025706") or ("20210031975") or ("20210039831") or ("20210039831") or ("20210155373") or ("20210187725") or ("20210267368") or ("D232798") or ("D285986") or ("D319016") or ("D325324") or ("D326815") or ("D340167") or ("D352208") or ("D361511") or ("D395533") or ("D415393") or ("D420860") or ("D437669") or ("D456972") or ("D525789") or ("D527225") or ("D536580") or ("D630851") or ("D649350") or ("D653832") or ("D661858") or ("D663952") or ("D664354") or ("D668869") or ("D674605") or ("D701696") or ("D738105") or ("D738106") or ("D738622") or ("D753394") or ("D753395") or ("D753396") or ("D753982") or ("D765974") or ("D770179") or ("D777426") or ("D784089") or ("D790221") or ("D803631") or ("D806483") or ("D814187") or ("D815831") or ("D816334") or ("D826510") or ("D828671") or ("D831352") or ("D833744") or ("D836995") or ("D837515") or ("D839681") or ("D845080") or ("D845081") or ("D857387") or ("D871013") or ("D873085") or ("D880252") or ("D880951") or ("D883752") or ("D887788") or ("D888422") or ("D888503") or ("D891193") or ("D891195") or ("D891875") or ("D892565") or ("D895375") or ("D895966") or ("D895967") or ("D896517") or ("D896518")				

		or ("D898320") or ("D917977") or ("D923935")).PN.				
S3	1,461	((("MILWAUKEE") near3 ("ELECTRIC") near3 ("TOOL") near3 ("CORPORATION")) OR (("KETER") near3 ("PLASTIC") near3 ("LTD"))).AS,AANM.	USPAT	OR	ON	2022/02/12 22:59
S4	1,461	((("MILWAUKEE") near3 ("ELECTRIC") near3 ("TOOL") near3 ("CORPORATION")) OR (("KETER") near3 ("PLASTIC") near3 ("LTD"))).AS,AANM.	USPAT	OR	ON	2022/02/12 22:59
S5	101	((("Brunner") near3 ("Yaron"))).INV.	US-PGPUB; USPAT; USOCR	OR	ON	2022/02/12 22:59
S6	90	((("Squiers") near3 ("Grant") near3 ("T"))).INV.	US-PGPUB; USPAT; USOCR	OR	ON	2022/02/12 22:59
S7	124	((("Hoppe") near3 ("Christopher") near3 ("S"))).INV.	US-PGPUB; USPAT; USOCR	OR	ON	2022/02/12 22:59
S8	214	((("Hyma") near3 ("Steven") near3 ("W"))).INV.	US-PGPUB; USPAT; USOCR	OR	ON	2022/02/12 22:59
S9	570	220/4.27.ccls.	US-PGPUB; USPAT; USOCR	OR	ON	2022/02/12 22:59
S10	1,015	B65D21/0223,0209.cpc.	US-PGPUB; USPAT; USOCR	OR	ON	2022/02/12 23:00
S11	2,377	A45C5/14.cpc.	US-PGPUB; USPAT; USOCR	OR	ON	2022/02/12 23:00
S12	111	A45C7/005.cpc.	US-PGPUB; USPAT; USOCR	OR	ON	2022/02/12 23:00
S13	3,619	A45C13/02.cpc.	US-PGPUB; USPAT; USOCR	OR	ON	2022/02/12 23:00

S14	476	A45F3/10.cpc.	US-PGPUB; USPAT; USOCR	OR	ON	2022/02/12 23:00
S15	997	B25H1/04.cpc.	US-PGPUB; USPAT; USOCR	OR	ON	2022/02/12 23:00
S16	1,287	B25H3/02.cpc.	US-PGPUB; USPAT; USOCR	OR	ON	2022/02/12 23:00
S17	224	B25H3/021.cpc.	US-PGPUB; USPAT; USOCR	OR	ON	2022/02/12 23:01
S18	1,197	B62B1/14.cpc.	US-PGPUB; USPAT; USOCR	OR	ON	2022/02/12 23:01
S19	615	B65D21/0209.cpc.	US-PGPUB; USPAT; USOCR	OR	ON	2022/02/12 23:01
S20	248	B65D21/0228.cpc.	US-PGPUB; USPAT; USOCR	OR	ON	2022/02/12 23:01
S21	409	A45C7/0045.cpc.	US-PGPUB; USPAT; USOCR	OR	ON	2022/02/12 23:01
S22	493	B25H3/023.cpc.	US-PGPUB; USPAT; USOCR	OR	ON	2022/02/12 23:01
S23	1,066	B62B5/067.cpc.	US-PGPUB; USPAT; USOCR	OR	ON	2022/02/12 23:01
S24	59	B65D2255/00.cpc.	US-PGPUB; USPAT; USOCR	OR	ON	2022/02/12 23:01
S25	222	B65H2701/533.cpc.	US-PGPUB; USPAT; USOCR	OR	ON	2022/02/12 23:02

S26	5	(("11192690") or ("11027883") or ("11008136") or ("10703534") or ("10981696")).PN.	US-PGPUB; USPAT; USOCR	OR	OFF	2022/02/12 23:07
S27	12,659	S9 S10 S11 S12 S13 S14 S15 S16 S17 S18 S19 S20 S21 S22 S23	US-PGPUB; USPAT; USOCR	OR	ON	2022/02/12 23:40
S28	4,953	S27 and (toggle latch lock)	US-PGPUB; USPAT; USOCR	OR	ON	2022/02/12 23:40
S29	7	("2019/0315515").URPN.	USPAT	OR	ON	2022/02/13 00:24
S30	20	("2019/0225371").URPN.	USPAT	OR	ON	2022/02/13 00:26
S31	25	("20010013358" | "20060237927" | "20070001409" | "20130207360" | "4254850" | "4724681" | "5228706" | "5249438" | "5259215" | "5313817" | "5346245" | "5373708" | "5680932" | "5713468" | "5762411" | "5781853" | "5934425" | "5988658" | "6216488" | "6585090" | "7143601" | "7604290" | "7854321" | "7938412" | "8256156" | "8356712" | "8740010" | "8820522" | "8844950").PN.	USPAT	OR	ON	2022/02/14 21:16
S32	29	("20010013358" | "20060237927" | "20070001409" | "20130207360" | "4254850" | "4724681" | "5228706" | "5249438" | "5259215" | "5313817" | "5346245" | "5373708" | "5680932" | "5713468" | "5762411" | "5781853" | "5934425" | "5988658" | "6216488" | "6585090" | "7143601" | "7604290" | "7854321" | "7938412" | "8256156" | "8356712" | "8740010" | "8820522" | "8844950").PN.	US-PGPUB; USPAT; USOCR	OR	ON	2022/02/14 21:16
S33	76	("1893526" | "1992435" | "20060021985" | "20060124643" | "20070273114" | "2747388" | "3383058" | "3995926" | "4466628" | "4739577" | "4820003" | "4887837" | "5207723" | "5240264" | "5285656" | "5333408" | "5378005" | "5452908" | "5595395" | "5893572" | "5988657" | "6176559" | "6209977" | "6347847" | "6601930" | "6761366" | "6802409" | "6832689" | "6910560" | "6923352" | "7111852" | "7278234" | "7306245" | "7488048" | "D141929" |	US-PGPUB; USPAT; USOCR	OR	ON	2022/02/14 21:17

		"D222933" | "D349989" | "D371663" | "D395108" | "D437484" | "D462170").PN. OR ("7938412").URPN.				
S34	196	("0344661" | "0687619" | "1424819" | "1933894" | "20010052681" | "20020014488" | "20020067027" | "20020074905" | "20020113386" | "20020185831" | "20030001348" | "20030146589" | "20040069668" | "20040265104" | "20050062244" | "20050104308" | "20050161357" | "20050224384" | "20050258610" | "20050275178" | "20060006619" | "20060012139" | "20060037964" | "20060038367" | "20070080512" | "20070103039" | "20070194024" | "20070194543" | "20070273114" | "20080084036" | "20080121547" | "20080128305" | "20080143069" | "20090020528" | "20090026901" | "20090096181" | "20090223853" | "20090236255" | "20090309323" | "20100052276" | "20100290877" | "20100327562" | "20110049824" | "20110181008" | "20120160886" | "20120326406" | "20140001719" | "20140023221" | "20140375181" | "2554091" | "2588830" | "2901262" | "2964328" | "3168329" | "3310905" | "3327841" | "3393951" | "3734526" | "3804432" | "3891230" | "3990653" | "4169607" | "4202459" | "4363496" | "4448434" | "4619363" | "4836374" | "4884689" | "4927021" | "4936594" | "4984704" | "5022546" | "5104135" | "5123666" | "5207723" | "5325966" | "5333885" | "5362078" | "5378005" | "5464104" | "5474312" | "5595395" | "5626352" | "5634649" | "5699925" | "5720535" | "5799958" | "5803254" | "5845915" | "5882097" | "5887715" | "5906381" | "5913527" | "5915554" | "5931483" | "5934466" | "5938396" | "6000713" | "6015064" | "6050660" | "6079719" | "6082539" | "6105767" | "6109627" | "6113129" | "6123344" | "6131926" | "6135466" | "6176559" | "6254112").PN. OR ("6347847" | "6357063" | "6371320" | "6394471" | "6398235" | "6474930" | "6523687" | "6561528" | "6601930" | "6616152" | "6626295" | "6648166" | "6648390" | "6659476" |	US-PGPUB; USPAT; USOCR	OR	ON	2022/02/14 21:18

		"6666465" | "6874634" | "6889838" | "6945546" | "6971517" | "6994214" | "7063339" | "7066475" | "7108131" | "7168715" | "7188846" | "7188847" | "7210689" | "7219969" | "7246704" | "7255229" | "7263742" | "7328905" | "7334680" | "7357268" | "7367571" | "7472730" | "7500681" | "7503569" | "7523827" | "7686260" | "7703776" | "7819407" | "7823893" | "7845653" | "7883096" | "7905353" | "7905502" | "7938412" | "8132819" | "8226092" | "8505729" | "8567796" | "8657307" | "8668209" | "9132543" | "9566990" | "D417338" | "D437484" | "D536525" | "D542496" | "D640869" | "D653832" | "D654241").PN. OR ("RE47022").URPN.				
S35	53	("0491865" | "2750064" | "2792245" | "3811559" | "4619363" | "5011013" | "5145064" | "5385257" | "5603402").PN. OR ("6082539").URPN.	US-PGPUB; USPAT; USOCR	OR	ON	2022/02/14 21:20
S36	2	("2936189").PN.	US-PGPUB; USPAT; USOCR	OR	OFF	2022/02/14 21:34
S37	63	((("Brunner") near3 ("Yaron"))).INV.	USPAT	OR	ON	2022/02/14 23:55
S38	69	(US-20130127129-$ or US-20120152944-$ or US-20180161975-$ or US-20210316909-$ or US-20210274900-$ or US-20210221561-$ or US-20210155373-$ or US-20210031975-$ or US-20200399026-$ or US-20200260827-$ or US-20200060400-$ or US-20190315515-$ or US-20190225371-$ or US-20160168880-$ or US-20180044059-$ or US-20170362017-$ or US-20170197765-$ or US-20170158216-$ or US-20160309863-$ or US-20140035519-$ or US-20160213115-$ or US-20150274362-$ or US-20150216279-$ or US-20150060316-$ or US-20140305829-$ or US-20140197059-$).did. or (US-20140183075-$ or US-20070273114-$ or US-20070194543-$ or US-20140062042-$ or US-20140013789-$ or US-20090078593-$ or US-20110181008-$ or US-20090288970-$ or US-20030075468-$ or US-20020030425-$).did. or (US-11059631-$ or US-11155382-$ or US-D917977-$ or US-8844950-$ or US-7938412-$ or US-9132543-$ or US-RE47022-$ or US-D918580-$ or US-10829269-$ or US-6082539-$ or US-11230410-$ or US-11008136-$ or US-	US-PGPUB; USPAT	OR	ON	2022/02/15 00:19

		9725209-$ or US-3891230-$ or US-6761366-$ or US-D437484-$ or US-D941020-$ or US-10583962-$ or US-D936030-$ or US-D932186-$ or US-D923935-$ or US-D920671-$ or US-D919296-$ or US-D918584-$ or US-10962218-$ or US-D898320-$).did. or (US-10793172-$ or US-D897103-$ or US-D896518-$ or US-D896517-$ or US-D895967-$ or US-D895966-$ or US-D876833-$).did.				
S39	384	(US-20080280523-$ or US-20070006542-$ or US-20060165482-$ or US-20040149754-$ or US-20210267368-$ or US-20210187725-$ or US-20210155373-$ or US-20210039831-$ or US-20210031975-$ or US-20210025706-$ or US-20200346819-$ or US-20200299027-$ or US-20200243925-$ or US-20200165036-$ or US-20200147781-$ or US-20200055534-$ or US-20200029543-$ or US-20190225371-$ or US-20190168376-$ or US-20190106244-$ or US-20190039781-$ or US-20190031222-$ or US-20190002004-$ or US-20190001482-$ or US-20180290288-$ or US-20180229889-$).did. or (US-20180220758-$ or US-20180213934-$ or US-20180186513-$ or US-20180161975-$ or US-20180153312-$ or US-20180127007-$ or US-20180099405-$ or US-20180044059-$ or US-20170349013-$ or US-20170318927-$ or US-20170266804-$ or US-20170257958-$ or US-20170239808-$ or US-20170217464-$ or US-20170174392-$ or US-20170166352-$ or US-20170165828-$ or US-20170138382-$ or US-20170121056-$ or US-20160221177-$ or US-20160168880-$ or US-20160144500-$ or US-20160130034-$ or US-20160023349-$ or US-20150376917-$ or US-20150310842-$ or US-20150274362-$).did. or (US-20150151427-$ or US-20150034515-$ or US-20150014949-$ or US-20140166516-$ or US-20140161518-$ or US-20140123478-$ or US-20140076759-$ or US-20140069832-$ or US-20130223971-$ or US-20130154218-$ or US-20130127129-$ or US-20130121783-$ or US-20130068903-$ or US-20130031732-$ or US-20130031731-$ or US-20130024468-$ or US-20120326406-$ or US-20120292213-$ or US-20120207571-$ or US-20120180250-$ or US-20120160886-$ or US-20120152944-$ or US-20120074158-$ or US-20120074022-$ or US-20110220531-$ or US-20110181008-$ or US-20110174939-$).did. or (US-20110155613-$ or US-20110139777-$ or US-	US-PGPUB; USPAT; USOCR	OR	ON	2022/02/15 00:20

		20110139665-$ or US-20110073516-$ or US-20100224528-$ or US-20100219193-$ or US-20100176261-$ or US-20100147642-$ or US-20100139566-$ or US-20100052276-$ or US-20090236482-$ or US-20090178946-$ or US-20090145913-$ or US-20090145866-$ or US-20090145790-$ or US-20090127146-$ or US-20090071990-$ or US-20090026901-$ or US-20080308369-$ or US-20080296443-$ or US-20080277221-$ or US-20080271280-$ or US-20080169739-$ or US-20080134607-$ or US-20080121547-$ or US-20080115312-$ or US-20080104921-$).did. or (US-20080060953-$ or US-20070194543-$ or US-20070145700-$ or US-20070090616-$ or US-20070068757-$ or US-20060254946-$ or US-20060186624-$ or US-20060119060-$ or US-20060076261-$ or US-20060038367-$ or US-20060027475-$ or US-20060006770-$ or US-20050242144-$ or US-20050139745-$ or US-20050104308-$ or US-20050062244-$ or US-20050015928-$ or US-20040206656-$ or US-20040195793-$ or US-20040103494-$ or US-20030205877-$ or US-20030184034-$ or US-20030146589-$ or US-20030115715-$ or US-20030094393-$ or US-20030094392-$ or US-20020171228-$).did. or (US-20020125072-$ or US-20020000440-$).did. or (US-8894160-$ or US-7350648-$ or US-6371321-$ or US-5454634-$ or US-5154291-$ or US-4660725-$ or US-4564732-$ or US-3851936-$ or US-3552817-$ or US-2386343-$ or US-0280523-$ or US-0165482-$ or US-0149754-$ or US-0006542-$ or US-11059631-$ or US-D923935-$ or US-11008136-$ or US-D917977-$ or US-10981696-$ or US-10962218-$ or US-10933501-$ or US-10829269-$ or US-D898320-$ or US-10793172-$ or US-D896518-$ or US-D896517-$).did. or (US-D895967-$ or US-D895966-$ or US-D895375-$ or US-10758065-$ or US-10750833-$ or US-D892565-$ or US-D891875-$ or US-D891195-$ or US-D891193-$ or US-10703534-$ or US-D888503-$ or US-D888422-$ or US-D887788-$ or US-D883752-$ or US-D880951-$ or US-D880252-$ or US-10603783-$ or US-10583962-$ or US-D873085-$ or US-D871013-$ or US-10434638-$ or US-D857387-$ or US-D845081-$ or US-D845080-$ or US-10222172-$ or US-D839681-$ or US-D837515-$).did. or (US-				

		D836995-$ or US-D833744-$ or US-D831352-$ or US-10106180-$ or US-D828671-$ or US-D826510-$ or US-D816334-$ or US-D815831-$ or US-D814187-$ or US-9888752-$ or US-9872562-$ or US-D806483-$ or US-9850029-$ or US-D803631-$ or US-9725209-$ or US-9701443-$ or US-D790221-$ or US-9643629-$ or US-D784089-$ or US-9616562-$ or US-9566990-$ or US-D777426-$ or US-9551367-$ or US-9511491-$ or US-9506489-$ or US-D770179-$ or US-D765974-$).did. or (US-D753982-$ or US-D753396-$ or US-D753395-$ or US-D753394-$ or US-D738622-$ or US-9132543-$ or US-D738106-$ or US-D738105-$ or US-8985922-$ or US-8979100-$ or US-8925752-$ or US-8875888-$ or US-8851282-$ or US-8813960-$ or US-8714355-$ or US-8689396-$ or US-D701696-$ or US-8677661-$ or US-8640913-$ or US-8602217-$ or US-8567796-$ or US-8505729-$ or US-8459495-$ or US-8454033-$ or US-8448829-$ or US-D674605-$ or US-D668869-$).did. or (US-D664354-$ or US-D663952-$ or US-D661858-$ or US-8191910-$ or US-8177463-$ or US-8132819-$ or US-D653832-$ or US-D649350-$ or US-8028845-$ or US-D630851-$ or US-7841144-$ or US-7837165-$ or US-7780026-$ or US-7779764-$ or US-7690856-$ or US-7658887-$ or US-7503569-$ or US-7367571-$ or US-7263742-$ or US-7219969-$ or US-D536580-$ or US-7172164-$ or US-7152752-$ or US-7147243-$ or US-D527225-$ or US-7090085-$ or US-D525789-$).did. or (US-7077372-$ or US-7066475-$ or US-7044484-$ or US-6983946-$ or US-6948691-$ or US-6945546-$ or US-6889838-$ or US-6641013-$ or US-6637707-$ or US-6619772-$ or US-6601930-$ or US-6547347-$ or US-6431580-$ or US-D456972-$ or US-6371424-$ or US-6371320-$ or US-6367631-$ or US-6347847-$ or US-6305498-$ or US-D437669-$ or US-6176559-$ or US-6109627-$ or US-6098858-$ or US-6085925-$ or US-6082687-$ or US-6082539-$ or US-6050660-$).did. or (US-D420860-$ or US-5988473-$ or US-D415393-$ or US-5957421-$ or US-5951037-$ or US-5890613-$ or US-5850996-$ or US-5797617-$ or US-5775046-$ or US-D395533-$ or US-5664292-$ or US-5653366-$ or US-5628443-$ or US-5622296-$ or US-5608603-$ or US-5595228-$ or US-5538213-$ or US-D361511-$ or US-5433416-$ or US-5429260-$ or US-5429235-				

		$ or US-5375709-$ or US-D352208-$ or US-5356105-$ or US-5356038-$ or US-5325966-$ or US-5301829-$).did. or (US-5282554-$ or US-D340167-$ or US-5240264-$ or US-D326815-$ or US-5105947-$ or US-D325324-$ or US-5098235-$ or US-D319016-$ or US-5035445-$ or US-4971201-$ or US-4929973-$ or US-4817237-$ or US-4805859-$ or US-4673070-$ or US-D285986-$ or US-4243279-$ or US-4168076-$ or US-4122925-$ or US-3999818-$ or US-3974898-$ or US-3935613-$ or US-D232798-$ or US-3743372-$ or US-3514170-$ or US-3506321-$ or US-3424334-$ or US-3423786-$).did. or (US-3225865-$ or US-3117692-$ or US-2970358-$ or US-2939613-$ or US-2430200-$ or US-2124541-$ or US-2042387-$ or US-1084360-$ or US-1081378-$ or US-0509839-$ or US-0495537-$).did. or (US-3552817-$ or US-2386343-$ or US-0280523-$ or US-0165482-$ or US-0149754-$ or US-0006542-$ or US-D232798-$ or US-3514170-$ or US-3506321-$ or US-3424334-$ or US-3423786-$ or US-3225865-$ or US-3117692-$ or US-2970358-$ or US-2939613-$ or US-2430200-$ or US-2124541-$ or US-2042387-$ or US-1084360-$ or US-1081378-$ or US-0509839-$ or US-0495537-$).did.				
S40	42	S38 not S39	US-PGPUB; USPAT; USOCR	OR	ON	2022/02/15 00:20
S41	1	("20130127129").PN.	US-PGPUB; USPAT; USOCR	OR	OFF	2022/02/15 00:22
S42	1	S41 and S39	US-PGPUB; USPAT; USOCR	OR	ON	2022/02/15 00:23
S43	173	("10434638" | "20020000440" | "20020171228" | "20030115715" | "20030146589" | "20030184034" | "20030205877" | "20040103494" | "20040195793" | "20040206656" | "20050062244" | "20050104308" | "20050139745" | "20060006770" | "20060027475" | "20060038367" | "20060119060" | "20060186624" | "20060254946" | "20070068757" | "20070090616" | "20070145700" |	US-PGPUB; USPAT; USOCR	OR	ON	2022/04/26 14:11

"20070194543" | "20080104921" |
"20080115312" | "20080121547" |
"20080134607" | "20080169739" |
"20080271280" | "20080277221" |
"20080308369" | "20090026901" |
"20090071990" | "20090145790" |
"20090145866" | "20090145913" |
"20090178946" | "20100052276" |
"20100139566" | "20100147642" |
"20100219193" | "20110073516" |
"20110139665" | "20110155613" |
"20110181008" | "20110220531" |
"20120160886" | "20120180250" |
"20120207571" | "20120326406" |
"20130024468" | "20130031731" |
"20130031732" | "20130121783" |
"20130127129" | "20130223971" |
"20140161518" | "20140166516" |
"20150376917" | "20160023349" |
"20160130034" | "20160144500" |
"20160168880" | "20170121056" |
"20170138382" | "20170165828" |
"20170166352" | "20170174392" |
"20170217464" | "20170239808" |
"20170257958" | "20170266804" |
"20170318927" | "20180044059" |
"20180161975" | "20180186513" |
"20180220758" | "20180290288" |
"20190002004" | "20190039781" |
"20190106244" | "20190225371" |
"2042387" | "2430200" | "2970358" |
"3117692" | "3506321" | "3974898" |
"4168076" | "5035445" | "5105947" |
"5240264" | "5301829" | "5429260" |
"5595228" | "5608603" | "5628443" |
"5797617").PN. OR ("5951037" | "5988473" |
"6050660" | "6085925" | "6109627" |
"6176559" | "6347847" | "6367631" |
"6371320" | "6431580" | "6547347" |
"6601930" | "6619772" | "6637707" |
"6641013" | "6945546" | "6948691" |
"6983946" | "7044484" | "7066475" |
"7147243" | "7263742" | "7367571" |
"7503569" | "7658887" | "7780026" |
"7841144" | "8028845" | "8132819" |
"8177463" | "8191910" | "8454033" |
"8459495" | "8505729" | "8567796" |
"8677661" | "8689396" | "8714355" |
"8813960" | "8875888" | "8979100" |
"8985922" | "9132543" | "9506489" |
"9511491" | "9566990" | "9616562" |
"9643629" | "9701443" | "9872562" |
"D525789" | "D630851" | "D653832" |

		"D661858" | "D663952" | "D664354" | "D674605" | "D701696" | "D738106" | "D753394" | "D753395" | "D765974" | "D770179" | "D790221" | "D814187" | "D816334" | "D826510" | "D833744" | "D837515").PN. OR ("D897103").URPN.				
S44	30	("2011/0139665").URPN.	USPAT	OR	ON	2022/04/26 14:14
S45	168	("10434638" | "20020000440" | "20020171228" | "20030115715" | "20030146589" | "20030184034" | "20030205877" | "20040103494" | "20040195793" | "20040206656" | "20050062244" | "20050104308" | "20050139745" | "20060006770" | "20060027475" | "20060038367" | "20060119060" | "20060186624" | "20060254946" | "20070068757" | "20070090616" | "20070145700" | "20070194543" | "20080104921" | "20080115312" | "20080121547" | "20080134607" | "20080169739" | "20080271280" | "20080277221" | "20080308369" | "20090071990" | "20090145790" | "20090145866" | "20090145913" | "20090178946" | "20100052276" | "20100139566" | "20100147642" | "20100219193" | "20110073516" | "20110139665" | "20110155613" | "20110181008" | "20110220531" | "20120160886" | "20120180250" | "20120207571" | "20120326406" | "20130024468" | "20130031731" | "20130031732" | "20130121783" | "20130127129" | "20130223971" | "20140161518" | "20140166516" | "20160023349" | "20160130034" | "20160144500" | "20160168880" | "20170121056" | "20170138382" | "20170165828" | "20170166352" | "20170174392" | "20170217464" | "20170239808" | "20170257958" | "20170266804" | "20170318927" | "20180044059" | "20180161975" | "20180220758" | "20180290288" | "20190002004" | "20190039781" | "20190106244" | "20190225371" | "2042387" | "2430200" | "2970358" | "3117692" | "3506321" | "3974898" | "4168076" | "5035445" | "5105947" | "5240264" | "5301829" | "5429260" | "5595228" | "5608603" |	US-PGPUB; USPAT; USOCR	OR	ON	2022/04/26 14:17

		"5628443" | "5797617" | "5951037" | "5988473" | "6050660" | "6085925").PN. OR ("6109627" | "6176559" | "6347847" | "6367631" | "6371320" | "6431580" | "6547347" | "6601930" | "6619772" | "6637707" | "6641013" | "6945546" | "6948691" | "6983946" | "7044484" | "7066475" | "7147243" | "7263742" | "7367571" | "7503569" | "7658887" | "7780026" | "7841144" | "8028845" | "8132819" | "8177463" | "8191910" | "8454033" | "8459495" | "8677661" | "8689396" | "8714355" | "8813960" | "8875888" | "8985922" | "9132543" | "9506489" | "9566990" | "9616562" | "9643629" | "9701443" | "9872562" | "D525789" | "D630851" | "D663952" | "D664354" | "D674605" | "D701696" | "D753394" | "D753395" | "D765974" | "D770179" | "D790221" | "D814187" | "D833744" | "D837515").PN. OR ("10583962").URPN.				
S46	21	("2017/0166352").URPN.	USPAT	OR	ON	2022/04/26 14:18
S47	1,511	((("MILWAUKEE") near3 ("ELECTRIC") near3 ("TOOL") near3 ("CORPORATION")) OR (("KETER") near3 ("PLASTIC") near3 ("LTD"))).AS,AANM.	USPAT	OR	ON	2022/04/26 14:25
S48	1,511	((("MILWAUKEE") near3 ("ELECTRIC") near3 ("TOOL") near3 ("CORPORATION")) OR (("KETER") near3 ("PLASTIC") near3 ("LTD"))).AS,AANM.	USPAT	OR	ON	2022/04/26 14:25
S49	104	((("Brunner") near3 ("Yaron"))).INV.	US-PGPUB; USPAT; USOCR	OR	ON	2022/04/26 14:25
S50	92	((("Squiers") near3 ("Grant") near3 ("T"))).INV.	US-PGPUB; USPAT; USOCR	OR	ON	2022/04/26 14:25
S51	130	((("Hoppe") near3 ("Christopher") near3 ("S"))).INV.	US-PGPUB; USPAT; USOCR	OR	ON	2022/04/26 14:25
S52	219	((("Hyma") near3 ("Steven") near3 ("W"))).INV.	US-PGPUB; USPAT; USOCR	OR	ON	2022/04/26 14:25

S53	18	("10027188" | "10063096" | "20050156564" | "20120218027" | "20130048647" | "20140328659" | "20150077042" | "20150077043" | "20170259956" | "20180009588" | "20180231238" | "20180366697" | "3733836" | "8579113" | "9153978" | "9379561" | "9748794" | "9829953").PN. OR ("11283117").URPN.	US-PGPUB; USPAT; USOCR	OR	ON	2022/04/26 14:52
S54	11	("20020070517" | "20080223679" | "20090149279" | "20090266833" | "5683097" | "6559791" | "6644447" | "7503569" | "8820497" | "8919508" | "9277796").PN. OR ("11066089").URPN.	US-PGPUB; USPAT; USOCR	OR	ON	2022/04/26 14:54
S55	9	("20080035655" | "20170121056" | "20180161975" | "20180220758" | "2409748" | "4423813" | "6983946").PN. OR ("11059631").URPN.	US-PGPUB; USPAT; USOCR	OR	ON	2022/04/26 14:54
S72	35	("2212390" | "5518315" | "20140093188" | "3746066" | "4560096" | "5904230" | "0733542" | "D627161" | "7021825" | "2253688" | "20090080809" | "20100104223" | "3861504" | "5632558" | "5467853" | "6543800" | "20070242804" | "20090107594" | "0841170" | "1291539" | "1148948" | "20100135602" | "5439109" | "6467665" | "7815024" | "8474640" | "5893504" | "6186662" | "8210353").PN.	US-PGPUB; USPAT; USOCR	OR	ON	2022/04/26 20:02
S73	35	("2451274" | "2453663" | "3175658" | "3565305" | "3570570").PN. OR ("3861504").URPN.	US-PGPUB; USPAT; USOCR	OR	ON	2022/04/26 20:04
S74	2	("5934527" | "6244400").PN.	US-PGPUB; USPAT; USOCR	OR	ON	2022/04/26 20:25
S82	8	(("1531542") or ("2201724") or ("2641374") or ("2923551")).PN.	US-PGPUB; USPAT; USOCR	OR	OFF	2022/04/27 15:36

EAST Search History (Interference)

Ref #	Hits	Search Query	DBs	Default Operator	Plurals	Time Stamp
L1	30	("0650786" | "1220159" | "1458679" | "20050145458" | "20050224305" | "20060124503" | "20060169690" | "20080083592" | "20090008202" | "20090321503" | "20100230307" |	US-PGPUB; USPAT	OR	ON	2022/04/27 21:39

		"20110272232" | "20140299505" | "20150296945" | "20180141739" | "20190144164" | "2425963" | "2465910" | "2627970" | "2672232" | "2998129" | "3432025" | "3497057" | "4093010" | "4294349" | "4550813" | "4609084" | "5806944" | "6059179" | "6102569").PN. OR ("11116297").URPN.				
L3	26	"Term Removed" or "Term Removed"	US-PGPUB; USPAT	OR	ON	2022/04/27 21:45
L6	1	"Term Removed"	US-PGPUB	OR	ON	2022/04/27 21:46
S56	459	220/4.27.ccls.	US-PGPUB; USPAT	OR	ON	2022/04/26 18:44
S57	440	B65D21/0223.cpc.	US-PGPUB; USPAT	OR	ON	2022/04/26 18:44
S58	2,335	A45C5/14.cpc.	US-PGPUB; USPAT	OR	ON	2022/04/26 18:44
S59	112	A45C7/005.cpc.	US-PGPUB; USPAT	OR	ON	2022/04/26 18:45
S60	3,306	A45C13/02.cpc.	US-PGPUB; USPAT	OR	ON	2022/04/26 18:45
S61	449	A45F3/10.cpc.	US-PGPUB; USPAT	OR	ON	2022/04/26 18:45
S62	915	B25H1/04.cpc.	US-PGPUB; USPAT	OR	ON	2022/04/26 18:45
S63	1,328	B25H3/02,021.cpc.	US-PGPUB; USPAT	OR	ON	2022/04/26 18:45
S64	930	B62B1/14.cpc.	US-PGPUB; USPAT	OR	ON	2022/04/26 18:45
S65	591	B65D21/0209.cpc.	US-PGPUB; USPAT	OR	ON	2022/04/26 18:45
S66	254	B65D21/0228.cpc.	US-PGPUB; USPAT	OR	ON	2022/04/26 18:46

S67	409	A45C7/0045.cpc.	US-PGPUB; USPAT	OR	ON	2022/04/26 18:46
S68	441	B25H3/023.cpc.	US-PGPUB; USPAT	OR	ON	2022/04/26 18:46
S69	1,046	B62B5/067.cpc.	US-PGPUB; USPAT	OR	ON	2022/04/26 18:46
S70	62	B65D2255/00.cpc.	US-PGPUB; USPAT	OR	ON	2022/04/26 18:46
S71	214	B65H2701/533.cpc.	US-PGPUB; USPAT	OR	ON	2022/04/26 18:46
S75	9	("2020/0037719").URPN.	USPAT	OR	ON	2022/04/26 19:54
S76	1,051	("0286909" | "10058151" | "1008041" | "10080412" | "10086745" | "10088144" | "10124742" | "10138048" | "10143282" | "10159312" | "10160471" | "10272934" | "10292473" | "10314377" | "10334935" | "10350746" | "10351330" | "10357874" | "10376031" | "10378569" | "10399748" | "10401075" | "10443918" | "1056648" | "10568395" | "10568400" | "10595608" | "20020024189" | "20020038745" | "20020074332" | "20020162841" | "20020185871" | "20020195827" | "20030019705" | "20030038007" | "20030038142" | "20030106821" | "20030111476" | "20030136702" | "20040007604" | "20040016854" | "20040025306" | "20040040967" | "20040163910" | "20040178208" | "20040246695" | "20050023096" | "20050099019" | "20050103813" | "20050139741" | "20050150892" | "20050180835" | "20050199628" | "20050217071" | "20050279123" | "20060011641" | "20060017293" | "20060037178" | "20060037824" | "20060042897" | "20060049640" | "20060180422" | "20060196218" | "20060213736" | "20060213941" | "20060225981" | "20060249412" | "20060249522" | "20060276768" | "20070039957" | "20070101754" | "20070175898" | "20070235452" | "20070261977" | "20080001373" |	US-PGPUB; USPAT	OR	ON	2022/04/26 19:55

"20080029528" | "20080042460" |
"20080067095" | "20080067206" |
"20080078637" | "20080078682" |
"20080110892" | "20080116215" |
"20080156858" | "20080170388" |
"20080190940" | "20080196650" |
"20080230339" | "20080245095" |
"20080257775" | "20080264946" |
"20090009039" | "20090014974" |
"20090049859" | "20090078593" |
"20090080809" | "20090101460" |
"20090114646" | "20090114653").PN. OR
("20090158770" | "20090173744" |
"20090194541" | "20090277905" |
"20100072215" | "20100078451" |
"20100108556" | "20100133132" |
"20100200784" | "20100258576" |
"20100275642" | "20110016911" |
"20110064332" | "20110114526" |
"20110119986" | "20110121002" |
"20110127264" | "20110132046" |
"20110181008" | "20110182532" |
"20110186396" | "20110186398" |
"20110197625" | "20110203328" |
"20110220531" | "20110226003" |
"20110226785" | "20120024896" |
"20120104012" | "20120168444" |
"20120193353" | "20120267208" |
"20120273506" | "20120286489" |
"20120312708" | "20130068579" |
"20130140120" | "20130168196" |
"20130175130" | "20130175276" |
"20130248390" | "20130292220" |
"20130292221" | "20130307214" |
"20140027454" | "20140062042" |
"20140069832" | "20140130310" |
"20140137370" | "20140138384" |
"20140151388" | "20140158028" |
"20140166516" | "20140197059" |
"20140251864" | "20140252010" |
"20140265197" | "20140271095" |
"20140284158" | "20140284243" |
"20140311361" | "20140311844" |
"20140319147" | "20150027835" |
"20150034515" | "20150069962" |
"20150089903" | "20150090551" |
"20150114024" | "20150129569" |
"20150175338" | "20150189963" |
"20150190920" | "20150208779" |
"20150209226" | "20150233630" |
"20150292840" | "20150296945" |
"20150315532" | "20150352709" |
"20150375558" | "20150375918" |

"20160023837" | "20160046417" |
"20160052682" | "20160083186" |
"20160084454" | "20160091239" |
"20160135563" | "20160138809" |
"20160150862" | "20160166024" |
"20160183651").PN. OR ("20160244209" |
"20160251124" | "20160279840" |
"20170079398" | "20170082342" |
"20170127782" | "20170165829" |
"20170173781" | "20170215537" |
"20170290400" | "20170347765" |
"20180035775" | "20180078008" |
"20180087819" | "20180141718" |
"20180339820" | "20180354687" |
"20190008254" | "20190092530" |
"20190170422" | "20190234671" |
"20190256119" | "20190271433" |
"20200037719" | "20200039056" |
"20200060400" | "20200061802" |
"20200062454" | "20200086905" | "2101337" |
"2109928" | "2439660" | "2472491" |
"2510643" | "2565939" | "2574089" |
"2577951" | "2581417" | "2604961" |
"2647653" | "2717093" | "2747732" |
"2803956" | "2869909" | "2931205" |
"2936189" | "3057636" | "3141680" |
"3191244" | "3202310" | "3225983" |
"3250558" | "3259412" | "3416701" |
"3432025" | "3464579" | "3565305" |
"3642168" | "3656650" | "3661410" |
"3688942" | "3690708" | "3741433" |
"3847423" | "3861504" | "3882914" |
"3886625" | "3902628" | "3915362" |
"3917038" | "3933269" | "3955656" |
"3987829" | "3991921" | "4094392" |
"4095711" | "4116479" | "4143442" |
"4153178" | "4249760" | "4254850" |
"4273223" | "4343412" | "4351165" |
"4446705" | "4465189" | "4476988" |
"4509622" | "4515421" | "4516686" |
"4522312" | "4523692" | "4550813" |
"4561526" | "4573202" | "4575109" |
"4592482" | "4615464" | "4662188" |
"4673207" | "4706344" | "4707011" |
"4712657" | "4746008" | "4768815" |
"4775072" | "4802344" | "4805272" |
"4826060" | "4858444" | "4873841" |
"4899904" | "4904007" | "4917261" |
"4928800").PN. OR ("4930649" | "4975073" |
"4982863" | "5011020" | "5014830" |
"5024471" | "5040834" | "5044513" |
"5062557" | "5075925" | "5080250" |
"5096030" | "5101541" | "5111920" |

"5117952" | "5139294" | "5153561" |
"5165583" | "5167433" | "5169018" |
"5205413" | "5213381" | "5216905" |
"5235830" | "5269157" | "5282706" |
"5313817" | "5319937" | "5322178" |
"5335451" | "5353946" | "5358082" |
"5373708" | "5390811" | "5402557" |
"5419432" | "5423644" | "5427308" |
"5431263" | "5435256" | "5454477" |
"5465985" | "5478097" | "5518139" |
"5519919" | "5524737" | "5526953" |
"5533231" | "5564805" | "5568848" |
"5570915" | "5575362" | "5603545" |
"5620212" | "5620213" | "5626373" |
"5630630" | "5662223" | "5683097" |
"5688001" | "5704158" | "5718350" |
"5727844" | "5732987" | "5755311" |
"5762242" | "5762411" | "5769194" |
"5797488" | "5803472" | "5813503" |
"5816185" | "5826718" | "5826770" |
"5839553" | "5860281" | "5865281" |
"5875948" | "5887745" | "5896962" |
"5901571" | "5904269" | "5924303" |
"5933929" | "5934716" | "5940940" |
"5950368" | "5956805" | "5957321" |
"5971218" | "5975334" | "5984064" |
"5984326" | "5984382" | "5988658" |
"6015072" | "6047976" | "6050373" |
"6079083" | "6079754" | "6105767" |
"6129231" | "6135253" | "6152501" |
"6167994" | "6170122" | "6176499" |
"6176559" | "6179176" | "6234287" |
"6244064" | "6244066" | "6244458" |
"6247203" | "6247328" | "6260240" |
"6279971" | "6289554" | "6289684" |
"6305185" | "6343815" | "6353978" |
"6357080" | "6360400" | "6363739").PN. OR
("6367602" | "6371320" | "6371346" |
"6375237" | "6389645" | "6398272" |
"6401308" | "6422386" | "6427475" |
"6427501" | "6446382" | "6446988" |
"6467779" | "6478463" | "6481239" |
"6497311" | "6497438" | "6499574" |
"6502677" | "6508389" | "6520514" |
"6527309" | "6532624" | "6543096" |
"6547218" | "6547289" | "6550592" |
"6554327" | "6574983" | "6585090" |
"6612411" | "6619448" | "6637077" |
"6637562" | "6640397" | "6646864" |
"6658903" | "6679358" | "6679359" |
"6691451" | "6698608" | "6718559" |
"6736265" | "6755448" | "6757942" |
"6761366" | "6779681" | "6789692" |

"6793096" | "6821019" | "6877189" |
"6883208" | "6895789" | "6929145" |
"6955381" | "6981780" | "6983946" |
"7017740" | "7028730" | "7040115" |
"7066311" | "7082641" | "7093699" |
"7162890" | "7171731" | "7237660" |
"7246704" | "7246718" | "7284393" |
"7284763" | "7296434" | "7306243" |
"7309106" | "7334680" | "7334802" |
"7344028" | "7367451" | "7370891" |
"7387350" | "7397674" | "7415794" |
"7418311" | "7434410" | "7441641" |
"7458481" | "7461871" | "7475782" |
"7503439" | "7516520" | "7516842" |
"7530405" | "7533782" | "7540364" |
"7549652" | "7568739" | "7571915" |
"7581656" | "7604290" | "7607540" |
"7658269" | "7669436" | "7688584" |
"7703588" | "7722204" | "7735261" |
"7748232" | "7806287" | "7841207" |
"7854321" | "7861552" | "7861834" |
"7874047" | "7874408" | "7909148" |
"7922052" | "7937884" | "7959194" |
"7997591" | "8016153" | "8037983" |
"8091731" | "8096152" | "8096442" |
"8099836" | "8141211").PN. OR ("8167166" |
"8176749" | "8191747" | "8210353" |
"8214972" | "8245868" | "8251113" |
"8251245" | "8256156" | "8286828" |
"8287009" | "8292119" | "8297464" |
"8328247" | "8336708" | "8342580" |
"8378323" | "8382171" | "8424930" |
"8430284" | "8459058" | "8459422" |
"8459487" | "8459495" | "8474098" |
"8484813" | "8490413" | "8496133" |
"8505729" | "8517211" | "8544648" |
"8561264" | "8561269" | "8567631" |
"8567796" | "8572821" | "8573399" |
"8590704" | "8590724" | "8596485" |
"8596487" | "8601838" | "8616600" |
"8622235" | "8627972" | "8640937" |
"8677661" | "8678227" | "8683660" |
"8689396" | "8714568" | "8740010" |
"8757642" | "8757643" | "8757696" |
"8763848" | "8763851" | "8770426" |
"8777045" | "8844749" | "8844950" |
"8850666" | "8851282" | "8851289" |
"8857654" | "8863975" | "8864185" |
"8864189" | "8875877" | "8875888" |
"8875934" | "8881930" | "8887515" |
"8905412" | "8910788" | "8910819" |
"8919596" | "8925752" | "8944476" |
"8960430" | "8960735" | "8979100" |

"8979101" | "8979144" | "8985326" |
"8985385" | "9004274" | "9004548" |
"9027751" | "9045264" | "9060577" |
"9067081" | "9079595" | "9085403" |
"9101186" | "9108772" | "9113686" |
"9114909" | "9139352" | "9163871" |
"9169678" | "9187210" | "9193060" |
"9198492" | "9199370" | "9199657" |
"9204699" | "9205551" | "9211040" |
"9215918" | "9233465" | "9248566" |
"9254901" | "9259090" | "9259593" |
"9259828" | "9266462" | "9272820" |
"9278704" | "9290297" | "9307840" |
"9322192" | "9327887" | "9340224" |
"9341003").PN. OR ("9341403" | "9346616" |
"9351550" | "9359798" | "9376050" |
"9387963" | "9393684" | "9408449" |
"9415787" | "9427058" | "9435578" |
"9443366" | "9468277" | "9511491" |
"9566704" | "9567784" | "9622547" |
"9637294" | "9655418" | "9669986" |
"9809376" | "9839272" | "9848681" |
"9849901" | "9878841" | "9883724" |
"9894971" | "9901153" | "9913518" |
"9968170" | "9999284" | "D256630" |
"D257218" | "D327427" | "D328186" |
"D333775" | "D334870" | "D335030" |
"D340167" | "D342609" | "D347971" |
"D351533" | "D355568" | "D358765" |
"D359836" | "D361888" | "D364426" |
"D367360" | "D368161" | "D369342" |
"D369695" | "D370619" | "D371051" |
"D371052" | "D371724" | "D371942" |
"D373514" | "D373515" | "D380369" |
"D381512" | "D381562" | "D381871" |
"D382114" | "D383306" | "D383603" |
"D387249" | "D387558" | "D387626" |
"D392510" | "D410387" | "D414673" |
"D419767" | "D419768" | "D420221" |
"D427882" | "D428698" | "D435780" |
"D441954" | "D449163" | "D451278" |
"D454292" | "D457725" | "D462519" |
"D464485" | "D466439" | "D467424" |
"D467425" | "D467426" | "D471711" |
"D472431" | "D474649" | "D477916" |
"D478782" | "D481293" | "D482593" |
"D484004" | "D487348" | "D489531" |
"D489595" | "D490980" | "D491797" |
"D492184" | "D493286" | "D497480" |
"D498053" | "D498054" | "D500598" |
"D505011" | "D508376" | "D515362" |
"D517947" | "D520237" | "D522811" |
"D523242" | "D525714" | "D528800" |

"D530095" | "D537251" | "D539543" |
"D540540" | "D540651" | "D540652" |
"D544211" | "D552352" | "D555902").PN. OR
("D562646" | "D563101" | "D566479" |
"D570601" | "D570603" | "D572577" |
"D574150" | "D574667" | "D575059" |
"D578758" | "D579202" | "D581161" |
"D582678" | "D587902" | "D590694" |
"D591511" | "D596400" | "D597652" |
"D600912" | "D602252" | "D607697" |
"D608159" | "D608601" | "D610349" |
"D613560" | "D617561" | "D618966" |
"D619423" | "D619854" | "D619855" |
"D624315" | "D626451" | "D627162" |
"D627199" | "D629200" | "D630435" |
"D633300" | "D634545" | "D635366" |
"D636292" | "D637811" | "D642379" |
"D643624" | "D644434" | "D646528" |
"D648538" | "D650585" | "D654694" |
"D659395" | "D660000" | "D664891" |
"D665166" | "D666002" | "D666831" |
"D666832" | "D667697" | "D668049" |
"D670502" | "D674192" | "D677896" |
"D678749" | "D678750" | "D681337" |
"D685186" | "D688589" | "D688920" |
"D691808" | "D697717" | "D699100" |
"D699438" | "D701697" | "D703435" |
"D709336" | "D709696" | "D710099" |
"D710610" | "D710614" | "D711104" |
"D711646" | "D711647" | "D711648" |
"D711649" | "D712143" | "D714056" |
"D714057" | "D714064" | "D717152" |
"D718051" | "D718936" | "D719351" |
"D720599" | "D720928" | "D722771" |
"D722860" | "D724323" | "D725907" |
"D727620" | "D728933" | "D730050" |
"D730716" | "D731250" | "D732348" |
"D732349" | "D732350" | "D732823" |
"D732899" | "D732923" | "D734742" |
"D738702" | "D740557" | "D740558" |
"D743171" | "D744750" | "D747639" |
"D747950" | "D747951" | "D748452" |
"D750953" | "D752344" | "D752862" |
"D755518" | "D759971" | "D762471" |
"D762977" | "D765397").PN. OR ("D765406" |
"D765407" | "D765408" | "D765409" |
"D765410" | "D765411" | "D765973" |
"D767277" | "D768464" | "D770179" |
"D771381" | "D772577" | "D773821" |
"D773901" | "D776932" | "D776934" |
"D777441" | "D777530" | "D778054" |
"D778707" | "D779201" | "D780523" |
"D780524" | "D780525" | "D784017" |

		"D785937" | "D786561" | "D788460" | "D792094" | "D792105" | "D793089" | "D796199" | "D796838" | "D804819" | "D805772" | "D805851" | "D806483" | "D807123" | "D807124" | "D808164" | "D808653" | "D808655" | "D808730" | "D809293" | "D809295" | "D810432" | "D810433" | "D811084" | "D811090" | "D811742" | "D811744" | "D812909" | "D814187" | "D815831" | "D815919" | "D816337" | "D816492" | "D817722" | "D818712" | "D819331" | "D820049" | "D821824" | "D821825" | "D824168" | "D824731" | "D827304" | "D828028" | "D828029" | "D828112" | "D829244" | "D830132" | "D830133" | "D830134" | "D832653" | "D834819" | "D835470" | "D835472" | "D835473" | "D835946" | "D836993" | "D836996" | "D836997" | "D836998" | "D836999" | "D837001" | "D837515" | "D837611" | "D838208" | "D838983" | "D838984" | "D839094" | "D839682" | "D840150" | "D840194" | "D842048" | "D844325" | "D848219" | "D848220" | "D848221" | "D848222" | "D848223" | "D848744" | "D848798" | "D849486" | "D850796" | "D851401" | "D853729" | "D854826" | "D857386" | "D859842" | "D861535" | "D869160" | "D869244" | "D869848" | "D872478" | "D872485" | "D873020" | "D876833" | "D878054").PN. OR ("D904829").URPN.				
S77	9	("2015/0190920").URPN.	USPAT	OR	ON	2022/04/26 19:57
S78	2	("20110005240" | "5344024").PN.	US-PGPUB; USPAT	OR	ON	2022/04/26 19:58
S79	64	("2707839" | "2711050" | "3016129" | "4314650" | "4589546" | "4643316" | "4972625" | "4974746" | "5027972" | "5163578" | "5181619" | "5277329" | "D246508" | "D281836" | "D308915").PN. OR ("5344024").URPN.	US-PGPUB; USPAT	OR	ON	2022/04/26 19:59
S80	8	("2015/0090551").URPN.	USPAT	OR	ON	2022/04/26 20:02
S81	0	("2012/0073995").URPN.	USPAT	OR	ON	2022/04/26 20:25

4/27/2022 9:54:52 PM
C:\Users\gweinerth\Desktop\CURRENT DOCKET\BRUNNER X 17536521\Brunner 10 Workspace.wsp

Doc Code: DIST.E.FILE Document Description: Electronic Terminal Disclaimer - Filed	PTO/SB/25 U.S. Patent and Trademark Office Department of Commerce

Electronic Petition Request	**TERMINAL DISCLAIMER TO OBVIATE A PROVISIONAL DOUBLE PATENTING REJECTION OVER A PENDING "REFERENCE" APPLICATION**
Application Number	17536521
Filing Date	29-Nov-2021
First Named Inventor	Yaron Brunner
Attorney Docket Number	066749-3309
Title of Invention	Utility Assembly and Coupling Mechanism

☒ Filing of terminal disclaimer does not obviate requirement for response under 37 CFR 1.111 to outstanding Office Action

☒ This electronic Terminal Disclaimer is not being used for a Joint Research Agreement.

Owner	Percent Interest
Milwaukee Electric Tool Corporation	100%
Keter Plastics LTD	100%

The owner(s) of percent interest listed above in the instant application hereby disclaims, except as provided below, the terminal part of the statutory term of any patent granted on the instant application which would extend beyond the expiration date of the full statutory term of any patent granted on pending reference Application Number(s)

15826232 filed on 11/29/2017

17132609 filed on 12/23/2020

16752441 filed on 01/24/2020

16216724 filed on 12/11/2018

17391904 filed on 08/02/2021

16893591 filed on 06/05/2020

17167925 filed on 02/04/2021

as the term of any patent granted on said reference application may be shortened by any terminal disclaimer filed prior to the grant of any patent on the pending reference application. The owner hereby agrees that any patent so granted on the instant application shall be enforceable only for and during such period that it and any patent granted on the reference application are commonly owned. This agreement runs with any patent granted on the instant application and is binding upon the grantee, its successors or assigns.

In making the above disclaimer, the owner does not disclaim the terminal part of any patent granted on the instant application that would extend to the expiration date of the full statutory term of any patent granted on said reference application, "as the term of any patent granted on said reference application may be shortened by any terminal disclaimer filed prior to the grant of any patent on the pending reference application," in the event that any such patent granted on the pending reference application: expires for failure to pay a maintenance fee, is held unenforceable, is found invalid by a court of competent jurisdiction, is statutorily disclaimed in whole or terminally disclaimed under 37 CFR 1.321, has all claims canceled by a reexamination certificate, is reissued, or is in any manner terminated prior to the expiration of its full statutory term as shortened by any terminal disclaimer filed prior to its grant.

(●) Terminal disclaimer fee under 37 CFR 1.20(d) is included with Electronic Terminal Disclaimer request.

( ) I certify, in accordance with 37 CFR 1.4(d)(4), that the terminal disclaimer fee under 37 CFR 1.20(d) required for this terminal disclaimer has already been paid in the above-identified application.

Applicant claims the following fee status:

( ) Small Entity

( ) Micro Entity

(●) Regular Undiscounted

I hereby declare that all statements made herein of my own knowledge are true and that all statements made on information and belief are believed to be true; and further that these statements were made with the knowledge that willful false statements and the like so made are punishable by fine or imprisonment, or both, under Section 1001 of Title 18 of the United States Code and that such willful false statements may jeopardize the validity of the application or any patent issued thereon.

THIS PORTION MUST BE COMPLETED BY THE SIGNATORY OR SIGNATORIES

I certify, in accordance with 37 CFR 1.4(d)(4) that I am:

(●) An attorney or agent registered to practice before the Patent and Trademark Office who is of record in this application

Registration Number 70608

( ) A sole inventor

( ) A joint inventor; I certify that I am authorized to sign this submission on behalf of all of the inventors as evidenced by the power of attorney in the application

( ) A joint inventor; all of whom are signing this request

Signature	/Derek H. Campbell/
Name	Derek H. Campbell

*Statement under 37 CFR 3.73(b) is required if terminal disclaimer is signed by the assignee (owner).
Form PTO/SB/96 may be used for making this certification. See MPEP § 324.

Electronic Patent Application Fee Transmittal

Application Number:	17536521
Filing Date:	29-Nov-2021
Title of Invention:	Utility Assembly and Coupling Mechanism
First Named Inventor/Applicant Name:	Yaron Brunner
Filer:	Derek Howard Campbell/Sarah Sesterhenn-Lee
Attorney Docket Number:	066749-3309

Filed as Large Entity

Filing Fees for Utility under 35 USC 111(a)

Description	Fee Code	Quantity	Amount	Sub-Total in USD($)
Basic Filing:				
STATUTORY OR TERMINAL DISCLAIMER	1814	1	170	170
Pages:				
Claims:				
Miscellaneous-Filing:				
Petition:				
Patent-Appeals-and-Interference:				
Post-Allowance-and-Post-Issuance:				

Description	Fee Code	Quantity	Amount	Sub-Total in USD($)
Extension-of-Time:				
Miscellaneous:				
			Total in USD ($)	**170**

Doc Code: DISQ.E.FILE
Document Description: Electronic Terminal Disclaimer – Approved

Application No.: 17536521

Filing Date: 29-Nov-2021

Applicant/Patent under Reexamination: Brunner et al.

Electronic Terminal Disclaimer filed on April 14, 2022

☒ APPROVED

This patent is subject to a terminal disclaimer

☐ DISAPPROVED

Approved/Disapproved by: Electronic Terminal Disclaimer automatically approved by EFS-Web

U.S. Patent and Trademark Office

Electronic Acknowledgement Receipt

EFS ID:	45476097
Application Number:	17536521
International Application Number:	
Confirmation Number:	7250
Title of Invention:	Utility Assembly and Coupling Mechanism
First Named Inventor/Applicant Name:	Yaron Brunner
Customer Number:	142078
Filer:	Derek Howard Campbell/Sarah Sesterhenn-Lee
Filer Authorized By:	Derek Howard Campbell
Attorney Docket Number:	066749-3309
Receipt Date:	14-APR-2022
Filing Date:	29-NOV-2021
Time Stamp:	16:37:53
Application Type:	Utility under 35 USC 111(a)

Payment information:

Submitted with Payment	yes
Payment Type	DA
Payment was successfully received in RAM	$170
RAM confirmation Number	E20224DG37494199
Deposit Account	180882
Authorized User	Sarah Sesterhenn-Lee

The Director of the USPTO is hereby authorized to charge indicated fees and credit any overpayment as follows:

37 CFR 1.16 (National application filing, search, and examination fees)

37 CFR 1.17 (Patent application and reexamination processing fees)

37 CFR 1.19 (Document supply fees)

37 CFR 1.20 (Post Issuance fees)

37 CFR 1.21 (Miscellaneous fees and charges)

File Listing:

Document Number	Document Description	File Name	File Size(Bytes)/ Message Digest	Multi Part /.zip	Pages (if appl.)
1	Terminal Disclaimer-Filed (Electronic)	eTerminal-Disclaimer.pdf	50028 5ad655740dfbdf278d85883f606fe1a5130f1300	no	2
Warnings:					
Information:					
2	Fee Worksheet (SB06)	fee-info.pdf	38182 da228882e7f3d137821cc08333ea7b0638004332	no	2
Warnings:					
Information:					
		Total Files Size (in bytes):	88210		

This Acknowledgement Receipt evidences receipt on the noted date by the USPTO of the indicated documents, characterized by the applicant, and including page counts, where applicable. It serves as evidence of receipt similar to a Post Card, as described in MPEP 503.

New Applications Under 35 U.S.C. 111
If a new application is being filed and the application includes the necessary components for a filing date (see 37 CFR 1.53(b)-(d) and MPEP 506), a Filing Receipt (37 CFR 1.54) will be issued in due course and the date shown on this Acknowledgement Receipt will establish the filing date of the application.
National Stage of an International Application under 35 U.S.C. 371
If a timely submission to enter the national stage of an international application is compliant with the conditions of 35 U.S.C. 371 and other applicable requirements a Form PCT/DO/EO/903 indicating acceptance of the application as a national stage submission under 35 U.S.C. 371 will be issued in addition to the Filing Receipt, in due course.
New International Application Filed with the USPTO as a Receiving Office
If a new international application is being filed and the international application includes the necessary components for an international filing date (see PCT Article 11 and MPEP 1810), a Notification of the International Application Number and of the International Filing Date (Form PCT/RO/105) will be issued in due course, subject to prescriptions concerning national security, and the date shown on this Acknowledgement Receipt will establish the international filing date of the application.

Under the Paperwork Reduction Act of 1995, no persons are required to respond to a collection of information unless it contains a valid OMB control number.

Substitute for form 1449/PTO

INFORMATION DISCLOSURE STATEMENT BY APPLICANT

Date Submitted: April 14, 2022

(use as many sheets as necessary)

Sheet	1	of	1

Complete if Known	
Application Number	17/536,521
Filing Date	November 29, 2021
First Named Inventor	Yaron Brunner
Art Unit	3736
Examiner Name	WEINERTH, GIDEON R
Attorney Docket Number	066749-3309

U.S. PATENT DOCUMENTS

Examiner Initials*	Cite No.[1]	Document Number / Number-Kind Code[2] (*if known*)	Publication Date MM-DD-YYYY	Name of Patentee or Applicant of Cited Document	Pages, Columns, Lines, Where Relevant Passages or Relevant Figures Appear
	A1	5,035,389	07-30-1991	Wang	
	A2	2021/0094600	04-01-2021	Brunner et al.	
	A3	D920,671	06-01-2021	Brunner et al.	
	A4	D932,186	10-05-2021	Brunner et al.	
	A5	D936,030	11-16-2021	Lee et al.	

UNPUBLISHED U.S. PATENT APPLICATION DOCUMENTS

Examiner Initials*	Cite No.[1]	U.S. Patent Application Document / Serial Number-Kind Code[2] (*if known*)	Filing Date of Cited Document MM-DD-YYYY	Name of Patentee or Applicant of Cited Document	Pages, Columns, Lines, Where Relevant Passages or Relevant Figures Appear

FOREIGN PATENT DOCUMENTS

Examiner Initials*	Cite No.[1]	Foreign Patent Document / Country Code[3]-Number[4]-Kind Code[5] (*if known*)	Publication Date MM-DD-YYYY	Name of Patentee or Applicant of Cited Documents	Pages, Columns, Lines, Where Relevant Passages or Relevant Figures Appear	T[6]

NON PATENT LITERATURE DOCUMENTS

Examiner Initials*	Cite No.[1]	Include name of the author (in CAPITAL LETTERS), title of the article (when appropriate), title of the item (book, magazine, journal, serial, symposium, catalog, etc.) date, page(s), volume-issue number(s), publisher, city and/or country where published.	T[6]

Examiner Signature		Date Considered	

*EXAMINER: Initial if reference considered, whether or not citation is in conformance with MPEP 609. Draw line through citation if not in conformance and not considered. Include copy of this form with next communication to applicant. 1 Applicant's unique citation designation number (optional). 2 See Kinds Codes of USPTO Patent Documents at www.uspto.gov or MPEP 901.04. 3 Enter Office that issued the document, by the two-letter code (WIPO Standard ST.3). 4 For Japanese patent documents, the indication of the year of the reign of the Emperor must precede the serial number of the patent document. 5 Kind of document by the appropriate symbols as indicated on the document under WIPO Standard ST.16 if possible. 6 Applicant is to place a check mark here if English language Translation is attached.

This collection of information is required by 37 CFR 1.97 and 1.98. The information is required to obtain or retain a benefit by the public which is to file (and by the USPTO to process) an application. Confidentiality is governed by 35 U.S.C. 122 and 37 CFR 1.14. This collection is estimated to take 2 hours to complete, including gathering, preparing, and submitting the completed application form to the USPTO. Time will vary depending upon the individual case. Any comments on the amount of time you require to complete this form and/or suggestions for reducing this burden, should be sent to the Chief Information Officer, U.S. Patent and Trademark Office, P.O. Box 1450, Alexandria, VA 22313-1450. DO NOT SEND FEES OR COMPLETED FORMS TO THIS ADDRESS. **SEND TO: Commissioner for Patents, P.O. Box 1450, Alexandria, VA 22313-1450**.

If you need assistance in completing the form, call 1-800-PTO-9199 (1-800-786-9199) and select option 2.

Electronic Patent Application Fee Transmittal

Application Number:	17536521
Filing Date:	29-Nov-2021
Title of Invention:	Utility Assembly and Coupling Mechanism
First Named Inventor/Applicant Name:	Yaron Brunner
Filer:	Derek Howard Campbell/Sarah Sesterhenn-Lee
Attorney Docket Number:	066749-3309

Filed as Large Entity

Filing Fees for Utility under 35 USC 111(a)

Description	Fee Code	Quantity	Amount	Sub-Total in USD($)
Basic Filing:				
Pages:				
Claims:				
Miscellaneous-Filing:				
Petition:				
Patent-Appeals-and-Interference:				
Post-Allowance-and-Post-Issuance:				
Extension-of-Time:				

Description	Fee Code	Quantity	Amount	Sub-Total in USD($)
Miscellaneous:				
SUBMISSION- INFORMATION DISCLOSURE STMT	1806	1	260	260
		Total in USD ($)		**260**

Electronic Acknowledgement Receipt

EFS ID:	45475182
Application Number:	17536521
International Application Number:	
Confirmation Number:	7250
Title of Invention:	Utility Assembly and Coupling Mechanism
First Named Inventor/Applicant Name:	Yaron Brunner
Customer Number:	142078
Filer:	Derek Howard Campbell/Sarah Sesterhenn-Lee
Filer Authorized By:	Derek Howard Campbell
Attorney Docket Number:	066749-3309
Receipt Date:	14-APR-2022
Filing Date:	29-NOV-2021
Time Stamp:	16:35:07
Application Type:	Utility under 35 USC 111(a)

Payment information:

Submitted with Payment	yes
Payment Type	DA
Payment was successfully received in RAM	$260
RAM confirmation Number	E20224DG35374155
Deposit Account	180882
Authorized User	Sarah Sesterhenn-Lee

The Director of the USPTO is hereby authorized to charge indicated fees and credit any overpayment as follows:

37 CFR 1.16 (National application filing, search, and examination fees)

37 CFR 1.17 (Patent application and reexamination processing fees)

37 CFR 1.19 (Document supply fees)

37 CFR 1.20 (Post Issuance fees)

37 CFR 1.21 (Miscellaneous fees and charges)

File Listing:

Document Number	Document Description	File Name	File Size(Bytes)/ Message Digest	Multi Part /.zip	Pages (if appl.)
1		066749-3309_Non-Final_Office_Action_Response.pdf	107493 4145a5aabd0e67b78b30b9f88f716c9b0837d2f2	yes	7
	Multipart Description/PDF files in .zip description				
	Document Description		**Start**	**End**	
	Amendment/Request for Reconsideration-After Non-Final Rejection		1	1	
	Claims		2	4	
	Applicant Arguments/Remarks Made in an Amendment		5	7	
Warnings:					
Information:					
2	Transmittal Letter	066749-3309-IDS_Transmittal.pdf	91718 39f49a6193b333b1bf4276c185d379bbdbfa35db	no	3
Warnings:					
Information:					
3	Information Disclosure Statement (IDS) Form (SB08)	066749-3309-SB08.pdf	109677 fbe805422ef0323d686e31b2f188a43e79ed188b	no	1
Warnings:					
Information:					
This is not an USPTO supplied IDS fillable form					
4	Fee Worksheet (SB06)	fee-info.pdf	38308 e9b6ce03d1752702d29860f63258eda5d17e97af	no	2
Warnings:					
Information:					
		Total Files Size (in bytes):	347196		

This Acknowledgement Receipt evidences receipt on the noted date by the USPTO of the indicated documents, characterized by the applicant, and including page counts, where applicable. It serves as evidence of receipt similar to a Post Card, as described in MPEP 503.

New Applications Under 35 U.S.C. 111
If a new application is being filed and the application includes the necessary components for a filing date (see 37 CFR 1.53(b)-(d) and MPEP 506), a Filing Receipt (37 CFR 1.54) will be issued in due course and the date shown on this Acknowledgement Receipt will establish the filing date of the application.
National Stage of an International Application under 35 U.S.C. 371
If a timely submission to enter the national stage of an international application is compliant with the conditions of 35 U.S.C. 371 and other applicable requirements a Form PCT/DO/EO/903 indicating acceptance of the application as a national stage submission under 35 U.S.C. 371 will be issued in addition to the Filing Receipt, in due course.
New International Application Filed with the USPTO as a Receiving Office
If a new international application is being filed and the international application includes the necessary components for an international filing date (see PCT Article 11 and MPEP 1810), a Notification of the International Application Number and of the International Filing Date (Form PCT/RO/105) will be issued in due course, subject to prescriptions concerning national security, and the date shown on this Acknowledgement Receipt will establish the international filing date of the application.

IN THE UNITED STATES PATENT AND TRADEMARK OFFICE

Applicant: Milwaukee Electric Tool Corporation et al.

Title: Utility Assembly and Coupling Mechanism

Appl. No.: 17/536,521

Filing Date: November 29, 2021

Examiner: Weinerth, Gideon R

Art Unit: 3736

Confirmation No: 7250

Mail Stop Amendment
Commissioner for Patents
P.O. Box 1450
Alexandria, VA 22313-1450

AMENDMENT AND REPLY UNDER 37 C.F.R. § 1.111

This communication is responsive to the Non-Final Office Action dated February 18, 2022, concerning the above-referenced patent application.

Amendments to the Claims are reflected in the listing of claims which begins on page 2 of this document.

Remarks begin on page 5 of this document.

Please amend the application as follows:

Amendments to the Claims:

This listing of claims will replace all prior versions, and listings, of claims in the application:

Listing of Claims:

1-20. (Cancelled)

21. (Previously Presented) A container assembly comprising:

a first container comprising:

a first coupler extending from a first face of the first container, the first coupler comprising two sidewalls, a back wall, and a rib, the back wall located between the two sidewalls, the two sidewalls and the back wall projecting from a depressed surface of the first face, and the rib extending from the back wall in a first direction;

a lid pivotally attached to the first container; and

a toggle locking latch configured to latch the lid of the first container in a closed position;

a second container comprising:

a second coupler extending from a second face of the second container, the second coupler comprising a tongue offset from the second face, the tongue extends in a second direction opposite the first direction, the tongue of the second container is engageable with the rib of the first container;

a lid pivotally attached to the second container; and

a toggle locking latch configured to latch the lid of the second container in a closed position;

wherein the first and second couplers of the first and second containers engage each other when the first and second containers are slid with respect to each other along a sliding path defined by the rib and the tongue;

a locking latch arresting location defined by one of the first container or the second container; and

a locking latch coupled to the other of the first container or the second container, the locking latch positionable in a locked position engaging the locking latch arresting location thereby limiting sliding displacement of the first container with respect to the second container.

22. (Currently Amended) The container assembly of claim 21, wherein the sliding path is perpendicular to the locking latch.

23. (Previously Presented) The container assembly of claim 22, wherein the locking latch comprises a rear surface, wherein the sliding path is perpendicular to the rear surface.

24. (Previously Presented) The container assembly of claim 23, wherein the locking latch is spring biased to engage with the locking latch arresting location.

25. (Previously Presented) The container assembly of claim 21, wherein the second coupler includes a front surface opposite the tongue, wherein the front surface is slanted relative to the second face of the second container.

26. (Currently Amended) The container assembly of claim 25, wherein the tongue includes a slanted surface opposite [[of]] from and parallel to the front surface of the second coupler.

27. (Previously Presented) The container assembly of claim 21, wherein the first face of the first container comprises a top face of the lid of the first container, and wherein the second face of the second container comprises a bottom face of the second container.

28. (Previously Presented) The container assembly of claim 21, wherein a width of the second container is half of a width of the first container, and the second container is located on top of the first container.

29. (Previously Presented) The container assembly of claim 28, wherein the first container further comprises a second toggle locking latch configured to latch the lid of the first container in a closed position.

30. (Previously Presented) The container assembly of claim 29, wherein the first container further comprises a handle coupled to a front face of the first container, wherein the handle is located between the first and second toggle locking latches.

31. (Previously Presented) The container assembly of claim 21, wherein the second container further comprises a pair of rear wheels and a telescoping handle extending upwards from a rear wall of the second container.

REMARKS

This reply is intended to be completely responsive to the Non-Final Office Action dated February 18, 2022.

Status

Claims 21-31 are pending in this application. Claims 21-31 were rejected, and claims 1-20 were cancelled.

With this amendment, claim 22 and 26 are amended, and no claims are added or cancelled.

Applicant believes that each of the rejections raised by the Examiner has been addressed and the application is in condition for allowance. Reconsideration and allowance of the application is respectfully requested.

Claim Objections

On page 2 of the Office Action, the Examiner objected to claim 26 because of various informalities with respect to the phrase "the tongue includes a slanted surface opposite of and parallel to." Office Action, page 2. Consistent with the Examiner's suggestion, Applicant has amended claim 26 to recite "the tongue includes a slanted surface opposite from and parallel to."

Accordingly, Applicant respectfully requests withdrawal of the objection to claim 26.

Double Patenting

On pages 2-4 of the Office Action, the Examiner has non-provisionally rejected claims 21-31 on the ground of nonstatutory obviousness-type double patenting as being unpatentable over claims 1-12 of U.S. Patent No. 10,583,962 ("the '962 patent") in view Bensman, U.S. Patent Publication No. 2013/0127129. Applicant submits herewith a terminal disclaimer in regard to the '962 patent, signed by the Attorney of Record, to overcome the referenced

obviousness-type double patenting rejection. Withdrawal of the non-provisional double patent rejection is respectfully requested.

On pages 2-4 of the Office Action, the Examiner has provisionally rejected claims 21-31 on the ground of nonstatutory obviousness-type double patenting as being unpatentable over U.S. Application No. 15/826,232 (now U.S. Patent No. 10,703,534), U.S. Application No. 16/216,724 (now U.S. Patent No. 10,583,962), U.S. Application No. 16/752,441 (now U.S. Patent No. 11,008,136), U.S. Application No. 16/893,591, U.S. Application No. 17/391,904 (now U.S. Patent No. 11,192,690), U.S. Application No. 17/132,609 and U.S. Application No. 17/167,925 (now U.S. Patent No. 11,027,883) in view of Bensman. Applicant submits herewith a terminal disclaimer in regard to each of the '232 application, the '441 application, the '591 application, the '904 application, the '609 application, and the '925 application, signed by the Attorney of Record, to overcome the referenced obviousness-type double patenting rejection. Applicant respectfully submits that a terminal disclaimer is being filed for the '724 application, now U.S. Patent No. 10,583,962, as indicated in the previous paragraph. Withdrawal of the provisional double patent rejections is respectfully requested.

Claim Rejections - 35 U.S.C. § 112

II. Rejection of claims 22-24 under 35 U.S.C. § 112, second paragraph, as being indefinite

On pages 4-5 of the Office Action, the Examiner rejected claims 22-24 under 35 U.S.C.§ 112, second paragraph, as being indefinite with respect to the phrase "the latch" recited in claim 22. Claims 23-24 depend from claim 22.

With this response, Applicant amended "the latch" in claim 22 to "the locking latch."

Accordingly, Applicant respectfully submits that claims 22 -24 are not indefinite under 35 U.S.C. § 112, second paragraph.

Conclusion

Applicant believes that the present application is in condition for allowance. Favorable reconsideration of the application is respectfully requested.

The Examiner is invited to contact the undersigned by telephone if it is felt that a telephone interview would advance the prosecution of the present application.

The Commissioner is hereby authorized to charge any additional fees which may be required regarding this application under 37 C.F.R. §§ 1.16-1.17, or credit any overpayment, to Deposit Account No. 18-0882. If any extensions of time are needed for timely acceptance of papers submitted herewith, Applicant hereby petitions for such extension under 37 C.F.R. §1.136 and authorizes payment of any such extensions fees to Deposit Account No. 18-0882.

Respectfully submitted,

Date April 14, 2022

By /Derek H. Campbell/

Reinhart Boerner Van Deuren s.c.
Customer Number: 142078
Telephone: (414) 298-8374
Facsimile: (414) 298-8097

Derek H. Campbell
Attorney for Applicant
Registration No. 70,608

IN THE UNITED STATES PATENT AND TRADEMARK OFFICE

Applicant: Milwaukee Electric Tool Corporation et al.

Title: Utility Assembly and Coupling Mechanism

Appl. No.: 17/536,521

Filing Date: November 29, 2021

Examiner: WEINERTH, GIDEON R

Art Unit: 3736

Confirmation Number: 7250

INFORMATION DISCLOSURE STATEMENT UNDER 37 CFR §1.56

Mail Stop Amendment
Commissioner for Patents
P.O. Box 1450
Alexandria, VA 22313-1450

Submitted herewith on Form PTO/SB/08 is a listing of the documents known to Applicants in order to comply with Applicants' duty of disclosure pursuant to 37 CFR § 1.56.

The submission of any document herewith, which is not a statutory bar, is not intended as an admission that such document constitutes prior art against the claims of the present application or that such document is considered material to patentability as defined in 37 CFR §1.56(b). Applicants do not waive any rights to take any action which would be appropriate to antedate or otherwise remove as a competent reference any document which is determined to be a *prima facie* art reference against the claims of the present application.

TIMING OF THE DISCLOSURE

The listed documents are being submitted in compliance with 37 CFR §1.97(c), before the mailing date of any of a final action under 37 CFR § 1.113, a notice of allowance under 37 CFR §1.311, or an action that otherwise closes prosecution in the application.

STATEMENT UNDER 37 CFR 1.97(e)

Per 37 CFR §1.97(e)(2), the undersigned hereby states that no item of information contained in the Information Disclosure Statement was cited in a communication from a foreign patent office in a counterpart foreign patent application, and, to the knowledge of the undersigned after making reasonable inquiry, no item of information contained in the Information Disclosure Statement was known to any individual designated in the 37 CFR 1.56(c) more than three months prior to the filing of the Information Disclosure Statement.

FEES

The IDS Fee of $260.00 under 37 CFR 1.17(p) is being paid via Deposit Account No. 18-0882 via EFS-web.

RELEVANCE OF EACH DOCUMENT

All of the documents are in English.

Applicants respectfully request that each listed document be considered by the Examiner and be made of record in the present application and that an initialed copy of Form PTO/SB/08 be returned in accordance with MPEP §609.

The Commissioner is hereby authorized to charge any additional fees which may be required regarding this application under 37 C.F.R. §§ 1.16-1.17, or credit any overpayment, to Deposit Account No. 18-0882. If any extensions of time are needed for timely acceptance of papers submitted herewith, applicant hereby petitions for such extension under 37 C.F.R. §1.136 and authorizes payment of any such extensions fees to Deposit Account No. 18-0882.

Respectfully submitted,

Date April 14, 2022

By /Derek H. Campbell/

Reinhart Boerner Van Deuren s.c.
Customer Number: 142078
Telephone: (414) 298-8374
Facsimile: (414) 298-8097

Derek H. Campbell
Attorney for Applicant
Registration No. 70,608

PTO/SB/06 (09-11)
Approved for use through 1/31/2014. OMB 0651-0032
U.S. Patent and Trademark Office; U.S. DEPARTMENT OF COMMERCE
Under the Paperwork Reduction Act of 1995, no persons are required to respond to a collection of information unless it displays a valid OMB control number.

PATENT APPLICATION FEE DETERMINATION RECORD Substitute for Form PTO-875	Application or Docket Number 17/536,521	Filing Date 11/29/2021	☐ To be Mailed

ENTITY: ☑ LARGE ☐ SMALL ☐ MICRO

APPLICATION AS FILED - PART I

FOR	(Column 1) NUMBER FILED	(Column 2) NUMBER EXTRA		RATE ($)	FEE ($)
☐ BASIC FEE (37 CFR 1.16(a), (b), or (c))	N/A	N/A		N/A	
☐ SEARCH FEE (37 CFR 1.16(k), (i), or (m))	N/A	N/A		N/A	
☐ EXAMINATION FEE (37 CFR 1.16(o), (p), or (q))	N/A	N/A		N/A	
TOTAL CLAIMS (37 CFR 1.16(i))	minus 20 =	*		x $100 =	
INDEPENDENT CLAIMS (37 CFR 1.16(h))	minus 3 =	*		x $480 =	
☐ APPLICATION SIZE FEE (37 CFR 1.16(s))	If the specification and drawings exceed 100 sheets of paper, the application size fee due is $310 ($155 for small entity) for each additional 50 sheets or fraction thereof. See 35 U.S.C. 41(a)(1)(G) and 37 CFR 1.16(s).				
☐ MULTIPLE DEPENDENT CLAIM PRESENT (37 CFR 1.16(j))					
* If the difference in column 1 is less than zero, enter "0" in column 2.				TOTAL	

APPLICATION AS AMENDED - PART II

AMENDMENT	04/14/2022	(Column 1) CLAIMS REMAINING AFTER AMENDMENT		(Column 2) HIGHEST NUMBER PREVIOUSLY PAID FOR	(Column 3) PRESENT EXTRA		RATE ($)	ADDITIONAL FEE ($)
	Total (37 CFR 1.16(i))	* 11	Minus	** 20	= 0		x $100 =	0
	Independent (37 CFR 1.16(h))	* 1	Minus	*** 3	= 0		x $480 =	0
	☐ Application Size Fee (37 CFR 1.16(s))							
	☐ FIRST PRESENTATION OF MULTIPLE DEPENDENT CLAIM (37 CFR 1.16(j))							
							TOTAL ADD'L FEE	0

AMENDMENT		(Column 1) CLAIMS REMAINING AFTER AMENDMENT		(Column 2) HIGHEST NUMBER PREVIOUSLY PAID FOR	(Column 3) PRESENT EXTRA		RATE ($)	ADDITIONAL FEE ($)
	Total (37 CFR 1.16(i))	*	Minus	**	=		x $0 =	
	Independent (37 CFR 1.16(h))	*	Minus	***	=		x $0 =	
	☐ Application Size Fee (37 CFR 1.16(s))							
	☐ FIRST PRESENTATION OF MULTIPLE DEPENDENT CLAIM (37 CFR 1.16(j))							
							TOTAL ADD'L FEE	

* If the entry in column 1 is less than the entry in column 2, write "0" in column 3.	LIE
** If the "Highest Number Previously Paid For" IN THIS SPACE is less than 20, enter "20".	/REGINALD TYSON/
*** If the "Highest Number Previously Paid For" IN THIS SPACE is less than 3, enter "3".	
The "Highest Number Previously Paid For" (Total or Independent) is the highest number found in the appropriate box in column 1.	

This collection of information is required by 37 CFR 1.16. The information is required to obtain or retain a benefit by the public which is to file (and by the USPTO to process) an application. Confidentiality is governed by 35 U.S.C. 122 and 37 CFR 1.14. This collection is estimated to take 12 minutes to complete, including gathering, preparing, and submitting the completed application form to the USPTO. Time will vary depending upon the individual case. Any comments on the amount of time you require to complete this form and/or suggestions for reducing this burden, should be sent to the Chief Information Officer, U.S. Patent and Trademark Office, U.S. Department of Commerce, P.O. Box 1450, Alexandria, VA 22313-1450. DO NOT SEND FEES OR COMPLETED FORMS TO THIS ADDRESS. **SEND TO: Commissioner for Patents, P.O. Box 1450, Alexandria, VA 22313-1450.**

If you need assistance in completing the form, call 1-800-PTO-9199 and select option 2.

UNITED STATES PATENT AND TRADEMARK OFFICE

UNITED STATES DEPARTMENT OF COMMERCE
United States Patent and Trademark Office
Address: COMMISSIONER FOR PATENTS
P.O. Box 1450
Alexandria, Virginia 22313-1450
www.uspto.gov

APPLICATION NUMBER	FILING OR 371(C) DATE	FIRST NAMED APPLICANT	ATTY. DOCKET NO./TITLE
17/536,521	11/29/2021	Yaron Brunner	066749-3309

CONFIRMATION NO. 7250

POA ACCEPTANCE LETTER

142078
Reinhart (Milwaukee Tool)
ATTN: TRAVIS MCDONNELL, PARALEGAL
1000 NORTH WATER STREET
SUITE 2100
MILWAUKEE, WI 53202

OC000000132794172

Date Mailed: 03/31/2022

NOTICE OF ACCEPTANCE OF POWER OF ATTORNEY

This is in response to the Power of Attorney filed 03/28/2022.

The Power of Attorney in this application is accepted. Correspondence in this application will be mailed to the above address as provided by 37 CFR 1.33.

Questions about the contents of this notice and the requirements it sets forth should be directed to the Office of Data Management, Application Assistance Unit, at **(571) 272-4000** or **(571) 272-4200** or **1-888-786-0101**.

/ttran/

Doc Code: PA..
Document Description: Power of Attorney

PTO/AIA/82B (07-13)
Approved for use through 03/31/2021. OMB 0651-0035
U.S. Patent and Trademark Office: U.S. DEPARTMENT OF COMMERCE
Under the Paperwork Reduction Act of 1995, no persons are required to respond to a collection of information unless it displays a valid OMB control number

POWER OF ATTORNEY BY APPLICANT

I hereby revoke all previous powers of attorney given in the application identified in either the attached transmittal letter or the boxes below.

Application Number	Filing Date
17/536,521	November 29, 2021

(Note: The boxes above may be left blank if information is provided on form PTO/AIA/82A.)

☑ I hereby appoint the Patent Practitioner(s) associated with the following Customer Number as my/our attorney(s) or agent(s), and to transact all business in the United States Patent and Trademark Office connected therewith for the application referenced in the attached transmittal letter (form PTO/AIA/82A) or identified above: 142078

OR

☐ I hereby appoint Practitioner(s) named in the attached list (form PTO/AIA/82C) as my/our attorney(s) or agent(s), and to transact all business in the United States Patent and Trademark Office connected therewith for the patent application referenced in the attached transmittal letter (form PTO/AIA/82A) or identified above. (Note: Complete form PTO/AIA/82C.)

Please recognize or change the correspondence address for the application identified in the attached transmittal letter or the boxes above to:

☑ The address associated with the above-mentioned Customer Number

OR

☐ The address associated with Customer Number:

OR

☐ Firm or Individual Name					
Address					
City		State		Zip	
Country					
Telephone		Email			

I am the Applicant (if the Applicant is a juristic entity, list the Applicant name in the box):

Keter Plastic Ltd.

☐ Inventor or Joint Inventor (title not required below)

☐ Legal Representative of a Deceased or Legally Incapacitated Inventor (title not required below)

☑ Assignee or Person to Whom the Inventor is Under an Obligation to Assign (provide signer's title if applicant is a juristic entity)

☐ Person Who Otherwise Shows Sufficient Proprietary Interest (e.g., a petition under 37 CFR 1.46(b)(2) was granted in the application or is concurrently being filed with this document) (provide signer's title if applicant is a juristic entity)

SIGNATURE of Applicant for Patent

The undersigned (whose title is supplied below) is authorized to act on behalf of the applicant (e.g., where the applicant is a juristic entity).

Signature		Date (Optional)	16/01/2022
Name	Nil Palistrant		Yuval Rafid
Title	GC		Group Treasurer

NOTE: Signature - This form must be signed by the applicant in accordance with 37 CFR 1.33. See 37 CFR 1.4 for signature requirements and certifications. If more than one applicant, use multiple forms.

☐ Total of forms are submitted.

This collection of information is required by 37 CFR 1.131, 1.32, and 1.33. The information is required to obtain or retain a benefit by the public which is to file (and by the USPTO to process) an application. Confidentiality is governed by 35 U.S.C. 122 and 37 CFR 1.11 and 1.14. This collection is estimated to take 3 minutes to complete, including gathering, preparing, and submitting the completed application form to the USPTO. Time will vary depending upon the individual case. Any comments on the amount of time you require to complete this form and/or suggestions for reducing this burden, should be sent to the Chief Information Officer, U.S. Patent and Trademark Office, U.S. Department of Commerce, P.O. Box 1450, Alexandria, VA 22313-1450. DO NOT SEND FEES OR COMPLETED FORMS TO THIS ADDRESS. **SEND TO: Commissioner for Patents, P.O. Box 1450, Alexandria, VA 22313-1450.**

If you need assistance in completing the form, call 1-800-PTO-9199 and select option 2.

Under the Paperwork Reduction Act of 1995, no persons are required to respond to a collection of information unless it displays a valid OMB control number.

STATEMENT UNDER 37 CFR 3.73(c)

Applicant/Patent Owner: Keter Plastic LTD.

Application No./Patent No.: 17/536,521 Filed/Issue Date: November 29, 2021

Titled: Utility Assembly and Coupling Mechanism

Keter Plastic LTD., a corporation

(Name of Assignee) (Type of Assignee, e.g., corporation, partnership, university, government agency, etc.)

states that, for the patent application/patent identified above, it is (choose **one** of options 1, 2, 3 or 4 below):

1. ☐ The assignee of the entire right, title, and interest.

2. ☑ An assignee of less than the entire right, title, and interest (check applicable box):

☐ The extent (by percentage) of its ownership interest is _____%. Additional Statement(s) by the owners holding the balance of the interest must be submitted to account for 100% of the ownership interest.

☑ There are unspecified percentages of ownership. The other parties, including inventors, who together own the entire right, title and interest are:

Milwaukee Electric Tool Corporation

Additional Statement(s) by the owner(s) holding the balance of the interest must be submitted to account for the entire right, title, and interest.

3. ☐ The assignee of an undivided interest in the entirety (a complete assignment from one of the joint inventors was made). The other parties, including inventors, who together own the entire right, title, and interest are:

Additional Statement(s) by the owner(s) holding the balance of the interest must be submitted to account for the entire right, title, and interest.

4. ☐ The recipient, via a court proceeding or the like (*e.g.*, bankruptcy, probate), of an undivided interest in the entirety (a complete transfer of ownership interest was made). The certified document(s) showing the transfer is attached.

The interest identified in option 1, 2 or 3 above (not option 4) is evidenced by either (choose **one** of options A or B below):

A. ☑ An assignment from the inventor(s) of the patent application/patent identified above. The assignment was recorded in the United States Patent and Trademark Office at Reel 059059, Frame 0306, or for which a copy thereof is attached.

B. ☐ A chain of title from the inventor(s), of the patent application/patent identified above, to the current assignee as follows:

1. From: _____ To: _____

The document was recorded in the United States Patent and Trademark Office at

Reel _____, Frame _____, or for which a copy thereof is attached.

2. From: _____ To: _____

The document was recorded in the United States Patent and Trademark Office at

Reel _____, Frame _____, or for which a copy thereof is attached.

This collection of information is required by 37 CFR 3.73(b). The information is required to obtain or retain a benefit by the public which is to file (and by the USPTO to process) an application. Confidentiality is governed by 35 U.S.C. 122 and 37 CFR 1.11 and 1.14. This collection is estimated to take 12 minutes to complete, including gathering, preparing, and submitting the completed application form to the USPTO. Time will vary depending upon the individual case. Any comments on the amount of time you require to complete this form and/or suggestions for reducing this burden, should be sent to the Chief Information Officer, U.S. Patent and Trademark Office, U.S. Department of Commerce, P.O. Box 1450, Alexandria, VA 22313-1450. DO NOT SEND FEES OR COMPLETED FORMS TO THIS ADDRESS. **SEND TO: Commissioner for Patents, P.O. Box 1450, Alexandria, VA 22313-1450.**

If you need assistance in completing the form, call 1-800-PTO-9199 and select option 2.

Under the Paperwork Reduction Act of 1995, no persons are required to respond to a collection of information unless it displays a valid OMB control number.

STATEMENT UNDER 37 CFR 3.73(c)

3. From: _____ To: _____

The document was recorded in the United States Patent and Trademark Office at

Reel _____, Frame _____, or for which a copy thereof is attached.

4. From: _____ To: _____

The document was recorded in the United States Patent and Trademark Office at

Reel _____, Frame _____, or for which a copy thereof is attached.

5. From: _____ To: _____

The document was recorded in the United States Patent and Trademark Office at

Reel _____, Frame _____, or for which a copy thereof is attached.

6. From: _____ To: _____

The document was recorded in the United States Patent and Trademark Office at

Reel _____, Frame _____, or for which a copy thereof is attached.

☐ Additional documents in the chain of title are listed on a supplemental sheet(s).

☑ As required by 37 CFR 3.73(c)(1)(i), the documentary evidence of the chain of title from the original owner to the assignee was, or concurrently is being, submitted for recordation pursuant to 37 CFR 3.11.

[NOTE: A separate copy (i.e., a true copy of the original assignment document(s)) must be submitted to Assignment Division in accordance with 37 CFR Part 3, to record the assignment in the records of the USPTO. See MPEP 302.08]

The undersigned (whose title is supplied below) is authorized to act on behalf of the assignee.

/Derek H. Campbell/	March 28, 2022
Signature	Date
Derek H. Campbell	70,608
Printed or Typed Name	Title or Registration Number

Privacy Act Statement

The **Privacy Act of 1974 (P.L. 93-579)** requires that you be given certain information in connection with your submission of the attached form related to a patent application or patent. Accordingly, pursuant to the requirements of the Act, please be advised that: (1) the general authority for the collection of this information is 35 U.S.C. 2(b)(2); (2) furnishing of the information solicited is voluntary; and (3) the principal purpose for which the information is used by the U.S. Patent and Trademark Office is to process and/or examine your submission related to a patent application or patent. If you do not furnish the requested information, the U.S. Patent and Trademark Office may not be able to process and/or examine your submission, which may result in termination of proceedings or abandonment of the application or expiration of the patent.

The information provided by you in this form will be subject to the following routine uses:

1. The information on this form will be treated confidentially to the extent allowed under the Freedom of Information Act (5 U.S.C. 552) and the Privacy Act (5 U.S.C 552a). Records from this system of records may be disclosed to the Department of Justice to determine whether disclosure of these records is required by the Freedom of Information Act.
2. A record from this system of records may be disclosed, as a routine use, in the course of presenting evidence to a court, magistrate, or administrative tribunal, including disclosures to opposing counsel in the course of settlement negotiations.
3. A record in this system of records may be disclosed, as a routine use, to a Member of Congress submitting a request involving an individual, to whom the record pertains, when the individual has requested assistance from the Member with respect to the subject matter of the record.
4. A record in this system of records may be disclosed, as a routine use, to a contractor of the Agency having need for the information in order to perform a contract. Recipients of information shall be required to comply with the requirements of the Privacy Act of 1974, as amended, pursuant to 5 U.S.C. 552a(m).
5. A record related to an International Application filed under the Patent Cooperation Treaty in this system of records may be disclosed, as a routine use, to the International Bureau of the World Intellectual Property Organization, pursuant to the Patent Cooperation Treaty.
6. A record in this system of records may be disclosed, as a routine use, to another federal agency for purposes of National Security review (35 U.S.C. 181) and for review pursuant to the Atomic Energy Act (42 U.S.C. 218(c)).
7. A record from this system of records may be disclosed, as a routine use, to the Administrator, General Services, or his/her designee, during an inspection of records conducted by GSA as part of that agency's responsibility to recommend improvements in records management practices and programs, under authority of 44 U.S.C. 2904 and 2906. Such disclosure shall be made in accordance with the GSA regulations governing inspection of records for this purpose, and any other relevant (*i.e.*, GSA or Commerce) directive. Such disclosure shall not be used to make determinations about individuals.
8. A record from this system of records may be disclosed, as a routine use, to the public after either publication of the application pursuant to 35 U.S.C. 122(b) or issuance of a patent pursuant to 35 U.S.C. 151. Further, a record may be disclosed, subject to the limitations of 37 CFR 1.14, as a routine use, to the public if the record was filed in an application which became abandoned or in which the proceedings were terminated and which application is referenced by either a published application, an application open to public inspection or an issued patent.
9. A record from this system of records may be disclosed, as a routine use, to a Federal, State, or local law enforcement agency, if the USPTO becomes aware of a violation or potential violation of law or regulation.

Electronic Acknowledgement Receipt

EFS ID:	45332864
Application Number:	17536521
International Application Number:	
Confirmation Number:	7250
Title of Invention:	Utility Assembly and Coupling Mechanism
First Named Inventor/Applicant Name:	Yaron Brunner
Customer Number:	142078
Filer:	Derek Howard Campbell/Sarah Sesterhenn-Lee
Filer Authorized By:	Derek Howard Campbell
Attorney Docket Number:	066749-3309
Receipt Date:	28-MAR-2022
Filing Date:	29-NOV-2021
Time Stamp:	17:31:52
Application Type:	Utility under 35 USC 111(a)

Payment information:

Submitted with Payment	no

File Listing:

Document Number	Document Description	File Name	File Size(Bytes)/ Message Digest	Multi Part /.zip	Pages (if appl.)
1	Transmittal Letter	066749-3309_Transmittal_for_POAs_and_3_73_Statements.pdf	74914 a43fdbd599f72d55f8517df6fe304bc39653ad78	no	2

Warnings:

Information:					
2	Power of Attorney	MT_POA_RBVD_066749-3309.pdf	39025 ed963fca6d0a1f431ad69a45e6ed6631c70cd288	no	1
Warnings:					
Information:					
3	Assignee showing of ownership per 37 CFR 3.73	066749-3309_3_73c_Statement_MT.pdf	85250 31e63c7ea3aba462298fef2ad793001d1ede34c7	no	3
Warnings:					
Information:					
4	Power of Attorney	066749-3309_Executed_Keter_PoA.pdf	293272 63a956c70e3de3c99c7b5a18f6ea063e2b4f456d	no	1
Warnings:					
Information:					
5	Assignee showing of ownership per 37 CFR 3.73	066749-3309_3_73c_Statement_Keter.pdf	84895 b1fae4ad396c1ba8829cf4e1f38d8ad97b08ebee	no	3
Warnings:					
Information:					
			Total Files Size (in bytes):	577356	

This Acknowledgement Receipt evidences receipt on the noted date by the USPTO of the indicated documents, characterized by the applicant, and including page counts, where applicable. It serves as evidence of receipt similar to a Post Card, as described in MPEP 503.

<u>New Applications Under 35 U.S.C. 111</u>
If a new application is being filed and the application includes the necessary components for a filing date (see 37 CFR 1.53(b)-(d) and MPEP 506), a Filing Receipt (37 CFR 1.54) will be issued in due course and the date shown on this Acknowledgement Receipt will establish the filing date of the application.
<u>National Stage of an International Application under 35 U.S.C. 371</u>
If a timely submission to enter the national stage of an international application is compliant with the conditions of 35 U.S.C. 371 and other applicable requirements a Form PCT/DO/EO/903 indicating acceptance of the application as a national stage submission under 35 U.S.C. 371 will be issued in addition to the Filing Receipt, in due course.
<u>New International Application Filed with the USPTO as a Receiving Office</u>
If a new international application is being filed and the international application includes the necessary components for an international filing date (see PCT Article 11 and MPEP 1810), a Notification of the International Application Number and of the International Filing Date (Form PCT/RO/105) will be issued in due course, subject to prescriptions concerning national security, and the date shown on this Acknowledgement Receipt will establish the international filing date of the application.

IN THE UNITED STATES PATENT AND TRADEMARK OFFICE

Applicant: Milwaukee Electric Tool Corporation et al.

Title: Utility Assembly and Coupling Mechanism

Appl. No.: 17/536,521

Filing Date: November 29, 2021

Examiner: WEINERTH, GIDEON R

Art Unit: 3736

Confirmation Number: 7250

TRANSMITTAL OF POWER OF ATTORNEYS AND 3.73 STATEMENTS FOR APPLICANTS

Commissioner for Patents
P.O. Box 1450
Alexandria, VA 22313-1450

Submitted herewith is a "Statement Under 37 CFR 3.73(c)" for each of (1) Milwaukee Electric Tool Corporation and (2) Keter Plastic LTD., establishing that Milwaukee Electric Tool Corporation and Keter Plastic LTD. collectively are the owner and the assignee of the entire right, title and interest in the above-referenced application. Also submitted herewith is a signed power of attorney for each of Milwaukee Electric Tool Corporation and Keter Plastic LTD.

The Commissioner is hereby authorized to charge any additional fees which may be required regarding this application under 37 C.F.R. §§ 1.16-1.17, or credit any overpayment, to Deposit Account No. 18-0882.

Please direct all correspondence to the undersigned attorney or agent at the address indicated below.

Respectfully submitted,

Date March 28, 2022

By /Derek H. Campbell/

Reinhart Boerner Van Deuren s.c.
Customer Number: 142078
Telephone: (414) 298-8374
Facsimile: (414) 298-8097

Derek H. Campbell
Attorney for Applicant
Registration No. 70,608

PTO/AIA/80 (07-12)
Approved for use through 11/30/2014. OMB 0651-0035
U.S. Patent and Trademark Office; U.S DEPARTMENT OF COMMERCE
Under the Paperwork Reduction Act of 1995, no persons are required to respond to a collection of information unless it displays a valid OMB control number.

POWER OF ATTORNEY TO PROSECUTE APPLICATIONS BEFORE THE USPTO

I hereby revoke all previous powers of attorney given in the application identified in the attached statement under 37 CFR 3.73(c).

I hereby appoint:

[■] Practitioners associated with Customer Number: 142078

OR

[ ] Practitioner(s) named below (if more than ten patent practitioners are to be named, then a customer number must be used):

Name	Registration Number	Name	Registration Number

As attorney(s) or agent(s) to represent the undersigned before the United States Patent and Trademark Office (USPTO) in connection with any and all patent applications assigned only to the undersigned according to the USPTO assignment records or assignments documents attached to this form in accordance with 37 CFR 3.73(c).

Please change the correspondence address for the application identified in the attached statement under 37 CFR 3.73(c) to:

[■] The address associated with Customer Number: 142078

OR

[ ] Firm or Individual Name			
Address			
City		State	Zip
Country			
Telephone		Email	

Assignee Name and Address: Milwaukee Electric Tool Corporation
13135 West Lisbon Road
Brookfield, Wisconsin 53002

A copy of this form, together with a statement under 37 CFR 3.73(c) (Form PTO/AIA/96 or equivalent) is required to be Filed in each application in which this form is used. The statement under 37 CFR 3.73(c) may be completed by one of The practitioners appointed in this form, and must identify the application in which this Power of Attorney is to be filed.

SIGNATURE of Assignee of Record

The individual whose signature and title is supplied below is authorized to act on behalf of the assignee

Signature		Date	7-6-16
Name	Ty Staviski	Telephone	262-781-3600
Title	Vice President, Secretary and Treasurere		

This collection of information is required by 37 CFR 1.31, 1.32 and 1.33. The information is required to obtain or retain a benefit by the public which is to file (and by the USPTO to process) an application. Confidentiality is governed by 35 U.S.C. 122 and 37 CFR 1.11 and 1.14. This collection is estimated to take 3 minutes to complete, including gathering, preparing, and submitting the completed application form to the USPTO. Time will vary depending upon the individual case. Any comments on the amount of time you require to complete this form and/or suggestions for reducing this burden, should be sent to the Chief Information Officer, U.S. Patent and Trademark Office, U.S. Department of Commerce, P.O. Box 1450, Alexandria, VA 22313-1450. DO NOT SEND FEES OR COMPLETED FORMS TO THIS ADDRESS. **SEND TO: Commissioner for Patents, P.O. Box 1450, Alexandria, VA 22313-1450.**

If you need assistance in completing the form, call 1-800-PTO-9199 and select option 2.

Under the Paperwork Reduction Act of 1995, no persons are required to respond to a collection of information unless it displays a valid OMB control number.

STATEMENT UNDER 37 CFR 3.73(c)

Applicant/Patent Owner: Milwaukee Electric Tool Corporation

Application No./Patent No.: 17/536,521 Filed/Issue Date: November 29, 2021

Titled: Utility Assembly and Coupling Mechanism

Milwaukee Electric Tool Corporation, a corporation

(Name of Assignee) (Type of Assignee, e.g., corporation, partnership, university, government agency, etc.)

states that, for the patent application/patent identified above, it is (choose **one** of options 1, 2, 3 or 4 below):

1. ☐ The assignee of the entire right, title, and interest.

2. ☑ An assignee of less than the entire right, title, and interest (check applicable box):

☐ The extent (by percentage) of its ownership interest is _____%. Additional Statement(s) by the owners holding the balance of the interest must be submitted to account for 100% of the ownership interest.

☑ There are unspecified percentages of ownership. The other parties, including inventors, who together own the entire right, title and interest are:

Keter Plastic LTD.

Additional Statement(s) by the owner(s) holding the balance of the interest must be submitted to account for the entire right, title, and interest.

3. ☐ The assignee of an undivided interest in the entirety (a complete assignment from one of the joint inventors was made). The other parties, including inventors, who together own the entire right, title, and interest are:

Additional Statement(s) by the owner(s) holding the balance of the interest must be submitted to account for the entire right, title, and interest.

4. ☐ The recipient, via a court proceeding or the like (*e.g.*, bankruptcy, probate), of an undivided interest in the entirety (a complete transfer of ownership interest was made). The certified document(s) showing the transfer is attached.

The interest identified in option 1, 2 or 3 above (not option 4) is evidenced by either (choose **one** of options A or B below):

A. ☑ An assignment from the inventor(s) of the patent application/patent identified above. The assignment was recorded in the United States Patent and Trademark Office at Reel 059059, Frame 0274, or for which a copy thereof is attached.

B. ☐ A chain of title from the inventor(s), of the patent application/patent identified above, to the current assignee as follows:

1. From: _____ To: _____

The document was recorded in the United States Patent and Trademark Office at

Reel _____, Frame _____, or for which a copy thereof is attached.

2. From: _____ To: _____

The document was recorded in the United States Patent and Trademark Office at

Reel _____, Frame _____, or for which a copy thereof is attached.

This collection of information is required by 37 CFR 3.73(b). The information is required to obtain or retain a benefit by the public which is to file (and by the USPTO to process) an application. Confidentiality is governed by 35 U.S.C. 122 and 37 CFR 1.11 and 1.14. This collection is estimated to take 12 minutes to complete, including gathering, preparing, and submitting the completed application form to the USPTO. Time will vary depending upon the individual case. Any comments on the amount of time you require to complete this form and/or suggestions for reducing this burden, should be sent to the Chief Information Officer, U.S. Patent and Trademark Office, U.S. Department of Commerce, P.O. Box 1450, Alexandria, VA 22313-1450. DO NOT SEND FEES OR COMPLETED FORMS TO THIS ADDRESS. **SEND TO: Commissioner for Patents, P.O. Box 1450, Alexandria, VA 22313-1450.**

If you need assistance in completing the form, call 1-800-PTO-9199 and select option 2.

Under the Paperwork Reduction Act of 1995, no persons are required to respond to a collection of information unless it displays a valid OMB control number.

STATEMENT UNDER 37 CFR 3.73(c)

3. From: _____ To: _____

The document was recorded in the United States Patent and Trademark Office at

Reel _____, Frame _____, or for which a copy thereof is attached.

4. From: _____ To: _____

The document was recorded in the United States Patent and Trademark Office at

Reel _____, Frame _____, or for which a copy thereof is attached.

5. From: _____ To: _____

The document was recorded in the United States Patent and Trademark Office at

Reel _____, Frame _____, or for which a copy thereof is attached.

6. From: _____ To: _____

The document was recorded in the United States Patent and Trademark Office at

Reel _____, Frame _____, or for which a copy thereof is attached.

☐ Additional documents in the chain of title are listed on a supplemental sheet(s).

☑ As required by 37 CFR 3.73(c)(1)(i), the documentary evidence of the chain of title from the original owner to the assignee was, or concurrently is being, submitted for recordation pursuant to 37 CFR 3.11.

[NOTE: A separate copy (i.e., a true copy of the original assignment document(s)) must be submitted to Assignment Division in accordance with 37 CFR Part 3, to record the assignment in the records of the USPTO. See MPEP 302.08]

The undersigned (whose title is supplied below) is authorized to act on behalf of the assignee.

/Derek H. Campbell/	March 28, 2022
Signature	Date
Derek H. Campbell	70,608
Printed or Typed Name	Title or Registration Number

Privacy Act Statement

The **Privacy Act of 1974 (P.L. 93-579)** requires that you be given certain information in connection with your submission of the attached form related to a patent application or patent. Accordingly, pursuant to the requirements of the Act, please be advised that: (1) the general authority for the collection of this information is 35 U.S.C. 2(b)(2); (2) furnishing of the information solicited is voluntary; and (3) the principal purpose for which the information is used by the U.S. Patent and Trademark Office is to process and/or examine your submission related to a patent application or patent. If you do not furnish the requested information, the U.S. Patent and Trademark Office may not be able to process and/or examine your submission, which may result in termination of proceedings or abandonment of the application or expiration of the patent.

The information provided by you in this form will be subject to the following routine uses:

1. The information on this form will be treated confidentially to the extent allowed under the Freedom of Information Act (5 U.S.C. 552) and the Privacy Act (5 U.S.C 552a). Records from this system of records may be disclosed to the Department of Justice to determine whether disclosure of these records is required by the Freedom of Information Act.
2. A record from this system of records may be disclosed, as a routine use, in the course of presenting evidence to a court, magistrate, or administrative tribunal, including disclosures to opposing counsel in the course of settlement negotiations.
3. A record in this system of records may be disclosed, as a routine use, to a Member of Congress submitting a request involving an individual, to whom the record pertains, when the individual has requested assistance from the Member with respect to the subject matter of the record.
4. A record in this system of records may be disclosed, as a routine use, to a contractor of the Agency having need for the information in order to perform a contract. Recipients of information shall be required to comply with the requirements of the Privacy Act of 1974, as amended, pursuant to 5 U.S.C. 552a(m).
5. A record related to an International Application filed under the Patent Cooperation Treaty in this system of records may be disclosed, as a routine use, to the International Bureau of the World Intellectual Property Organization, pursuant to the Patent Cooperation Treaty.
6. A record in this system of records may be disclosed, as a routine use, to another federal agency for purposes of National Security review (35 U.S.C. 181) and for review pursuant to the Atomic Energy Act (42 U.S.C. 218(c)).
7. A record from this system of records may be disclosed, as a routine use, to the Administrator, General Services, or his/her designee, during an inspection of records conducted by GSA as part of that agency's responsibility to recommend improvements in records management practices and programs, under authority of 44 U.S.C. 2904 and 2906. Such disclosure shall be made in accordance with the GSA regulations governing inspection of records for this purpose, and any other relevant (*i.e.*, GSA or Commerce) directive. Such disclosure shall not be used to make determinations about individuals.
8. A record from this system of records may be disclosed, as a routine use, to the public after either publication of the application pursuant to 35 U.S.C. 122(b) or issuance of a patent pursuant to 35 U.S.C. 151. Further, a record may be disclosed, subject to the limitations of 37 CFR 1.14, as a routine use, to the public if the record was filed in an application which became abandoned or in which the proceedings were terminated and which application is referenced by either a published application, an application open to public inspection or an issued patent.
9. A record from this system of records may be disclosed, as a routine use, to a Federal, State, or local law enforcement agency, if the USPTO becomes aware of a violation or potential violation of law or regulation.

UNITED STATES PATENT AND TRADEMARK OFFICE

UNITED STATES DEPARTMENT OF COMMERCE
United States Patent and Trademark Office
Address: COMMISSIONER FOR PATENTS
P.O. Box 1450
Alexandria, Virginia 22313-1450
www.uspto.gov

APPLICATION NUMBER	FILING OR 371(C) DATE	FIRST NAMED APPLICANT	ATTY. DOCKET NO./TITLE
17/536,521	11/29/2021	Yaron Brunner	066749-3309

CONFIRMATION NO. 7250

IMPROPER CPOA LETTER

142078
Reinhart (Milwaukee Tool)
ATTN: TRAVIS MCDONNELL, PARALEGAL
1000 NORTH WATER STREET
SUITE 2100
MILWAUKEE, WI 53202

OC000000132719364

Date Mailed: 03/28/2022

NOTICE REGARDING POWER OF ATTORNEY

This is in response to the power of attorney filed 03/24/2022. The power of attorney in this application is not accepted for the reason(s) listed below:

- The power of attorney has not been accepted because the party who is giving power has not been identified. Power of attorney may only be signed by the applicant for patent (37 CFR 1.42) or the patent owner. A party who is not the applicant must become the applicant in accordance with 37 CFR 1.46(c) and appoint any power of attorney in compliance with 37 CFR 3.71 and 3.73. For a reissue application, reexamination proceeding, or supplemental examination proceeding, a patent owner who was not the applicant under 37 CFR 1.46 must appoint any power of attorney in compliance with 37 CFR 3.71 and 3.73. See 37 CFR 1.32(b)(4).

/lqchau/

Office of Data Management, Application Assistance Unit (571) 272-4000, or (571) 272-4200, or 1-888-786-0101

Doc Code: PA..
Document Description: Power of Attorney

PTO/AIA/82B (07-13)
Approved for use through 03/31/2021. OMB 0651-0035
U.S. Patent and Trademark Office: U.S. DEPARTMENT OF COMMERCE
Under the Paperwork Reduction Act of 1995, no persons are required to respond to a collection of information unless it displays a valid OMB control number

POWER OF ATTORNEY BY APPLICANT

I hereby revoke all previous powers of attorney given in the application identified in either the attached transmittal letter or the boxes below.

Application Number	Filing Date
17/536,521	November 29, 2021

(Note: The boxes above may be left blank if information is provided on form PTO/AIA/82A.)

☑ I hereby appoint the Patent Practitioner(s) associated with the following Customer Number as my/our attorney(s) or agent(s), and to transact all business in the United States Patent and Trademark Office connected therewith for the application referenced in the attached transmittal letter (form PTO/AIA/82A) or identified above: 142078

OR

☐ I hereby appoint Practitioner(s) named in the attached list (form PTO/AIA/82C) as my/our attorney(s) or agent(s), and to transact all business in the United States Patent and Trademark Office connected therewith for the patent application referenced in the attached transmittal letter (form PTO/AIA/82A) or identified above. (Note: Complete form PTO/AIA/82C.)

Please recognize or change the correspondence address for the application identified in the attached transmittal letter or the boxes above to:

☑ The address associated with the above-mentioned Customer Number

OR

☐ The address associated with Customer Number:

OR

☐ Firm or Individual Name					
Address					
City		State		Zip	
Country					
Telephone		Email			

I am the Applicant (if the Applicant is a juristic entity, list the Applicant name in the box):

Keter Plastic Ltd.

☐ Inventor or Joint Inventor (title not required below)

☐ Legal Representative of a Deceased or Legally Incapacitated Inventor (title not required below)

☑ Assignee or Person to Whom the Inventor is Under an Obligation to Assign (provide signer's title if applicant is a juristic entity)

☐ Person Who Otherwise Shows Sufficient Proprietary Interest (e.g., a petition under 37 CFR 1.46(b)(2) was granted in the application or is concurrently being filed with this document) (provide signer's title if applicant is a juristic entity)

SIGNATURE of Applicant for Patent

The undersigned (whose title is supplied below) is authorized to act on behalf of the applicant (e.g., where the applicant is a juristic entity).

Signature		Date (Optional)	16/04/2022
Name	Nil Palistrant		Yuval Rafid
Title	GC		Group Treasurer

NOTE: Signature - This form must be signed by the applicant in accordance with 37 CFR 1.33. See 37 CFR 1.4 for signature requirements and certifications. If more than one applicant, use multiple forms.

☐ Total of forms are submitted.

This collection of information is required by 37 CFR 1.131, 1.32, and 1.33. The information is required to obtain or retain a benefit by the public which is to file (and by the USPTO to process) an application. Confidentiality is governed by 35 U.S.C. 122 and 37 CFR 1.11 and 1.14. This collection is estimated to take 3 minutes to complete, including gathering, preparing, and submitting the completed application form to the USPTO. Time will vary depending upon the individual case. Any comments on the amount of time you require to complete this form and/or suggestions for reducing this burden, should be sent to the Chief Information Officer, U.S. Patent and Trademark Office, U.S. Department of Commerce, P.O. Box 1450, Alexandria, VA 22313-1450. DO NOT SEND FEES OR COMPLETED FORMS TO THIS ADDRESS. **SEND TO: Commissioner for Patents, P.O. Box 1450, Alexandria, VA 22313-1450.**

If you need assistance in completing the form, call 1-800-PTO-9199 and select option 2.

Electronic Acknowledgement Receipt

EFS ID:	45313091
Application Number:	17536521
International Application Number:	
Confirmation Number:	7250
Title of Invention:	Utility Assembly and Coupling Mechanism
First Named Inventor/Applicant Name:	Yaron Brunner
Customer Number:	142078
Filer:	Derek Howard Campbell/Andrea Dietzel
Filer Authorized By:	Derek Howard Campbell
Attorney Docket Number:	066749-3309
Receipt Date:	24-MAR-2022
Filing Date:	29-NOV-2021
Time Stamp:	17:52:16
Application Type:	Utility under 35 USC 111(a)

Payment information:

Submitted with Payment	no

File Listing:

Document Number	Document Description	File Name	File Size(Bytes)/ Message Digest	Multi Part /.zip	Pages (if appl.)
1	Assignee showing of ownership per 37 CFR 3.73	066749-3309_373c_Statement.pdf	85218 f085da1e99ed89602c404d6347e42bcf2b25c5ea	no	3

Warnings:

Information:					
2	Power of Attorney	066749-3309_PoA.pdf	293229 65afb3579276a163de2922a31dcd5c12e922dff8	no	1
Warnings:					
Information:					
			Total Files Size (in bytes):	378447	

This Acknowledgement Receipt evidences receipt on the noted date by the USPTO of the indicated documents, characterized by the applicant, and including page counts, where applicable. It serves as evidence of receipt similar to a Post Card, as described in MPEP 503.

New Applications Under 35 U.S.C. 111
If a new application is being filed and the application includes the necessary components for a filing date (see 37 CFR 1.53(b)-(d) and MPEP 506), a Filing Receipt (37 CFR 1.54) will be issued in due course and the date shown on this Acknowledgement Receipt will establish the filing date of the application.
National Stage of an International Application under 35 U.S.C. 371
If a timely submission to enter the national stage of an international application is compliant with the conditions of 35 U.S.C. 371 and other applicable requirements a Form PCT/DO/EO/903 indicating acceptance of the application as a national stage submission under 35 U.S.C. 371 will be issued in addition to the Filing Receipt, in due course.
New International Application Filed with the USPTO as a Receiving Office
If a new international application is being filed and the international application includes the necessary components for an international filing date (see PCT Article 11 and MPEP 1810), a Notification of the International Application Number and of the International Filing Date (Form PCT/RO/105) will be issued in due course, subject to prescriptions concerning national security, and the date shown on this Acknowledgement Receipt will establish the international filing date of the application.

Under the Paperwork Reduction Act of 1995, no persons are required to respond to a collection of information unless it displays a valid OMB control number.

STATEMENT UNDER 37 CFR 3.73(c)

Applicant/Patent Owner: Keter Plastic LTD.

Application No./Patent No.: 17/536,521 Filed/Issue Date: November 29, 2021

Titled: Utility Assembly and Coupling Mechanism

Keter Plastic LTD., a corporation

(Name of Assignee) (Type of Assignee, e.g., corporation, partnership, university, government agency, etc.)

states that, for the patent application/patent identified above, it is (choose **one** of options 1, 2, 3 or 4 below):

1. ☐ The assignee of the entire right, title, and interest.

2. ☑ An assignee of less than the entire right, title, and interest (check applicable box):

☐ The extent (by percentage) of its ownership interest is _____%. Additional Statement(s) by the owners holding the balance of the interest must be submitted to account for 100% of the ownership interest.

☑ There are unspecified percentages of ownership. The other parties, including inventors, who together own the entire right, title and interest are:

Milwaukee Electric Tool Corporation

Additional Statement(s) by the owner(s) holding the balance of the interest must be submitted to account for the entire right, title, and interest.

3. ☐ The assignee of an undivided interest in the entirety (a complete assignment from one of the joint inventors was made). The other parties, including inventors, who together own the entire right, title, and interest are:

Additional Statement(s) by the owner(s) holding the balance of the interest must be submitted to account for the entire right, title, and interest.

4. ☐ The recipient, via a court proceeding or the like (*e.g.*, bankruptcy, probate), of an undivided interest in the entirety (a complete transfer of ownership interest was made). The certified document(s) showing the transfer is attached.

The interest identified in option 1, 2 or 3 above (not option 4) is evidenced by either (choose **one** of options A or B below):

A. ☑ An assignment from the inventor(s) of the patent application/patent identified above. The assignment was recorded in the United States Patent and Trademark Office at Reel 059059, Frame 0306, or for which a copy thereof is attached.

B. ☐ A chain of title from the inventor(s), of the patent application/patent identified above, to the current assignee as follows:

1. From: _____ To: _____

The document was recorded in the United States Patent and Trademark Office at

Reel _____, Frame _____, or for which a copy thereof is attached.

2. From: _____ To: _____

The document was recorded in the United States Patent and Trademark Office at

Reel _____, Frame _____, or for which a copy thereof is attached.

This collection of information is required by 37 CFR 3.73(b). The information is required to obtain or retain a benefit by the public which is to file (and by the USPTO to process) an application. Confidentiality is governed by 35 U.S.C. 122 and 37 CFR 1.11 and 1.14. This collection is estimated to take 12 minutes to complete, including gathering, preparing, and submitting the completed application form to the USPTO. Time will vary depending upon the individual case. Any comments on the amount of time you require to complete this form and/or suggestions for reducing this burden, should be sent to the Chief Information Officer, U.S. Patent and Trademark Office, U.S. Department of Commerce, P.O. Box 1450, Alexandria, VA 22313-1450. DO NOT SEND FEES OR COMPLETED FORMS TO THIS ADDRESS. **SEND TO: Commissioner for Patents, P.O. Box 1450, Alexandria, VA 22313-1450.**

If you need assistance in completing the form, call 1-800-PTO-9199 and select option 2.

Under the Paperwork Reduction Act of 1995, no persons are required to respond to a collection of information unless it displays a valid OMB control number.

STATEMENT UNDER 37 CFR 3.73(c)

3. From: _____ To: _____

The document was recorded in the United States Patent and Trademark Office at

Reel _____, Frame _____, or for which a copy thereof is attached.

4. From: _____ To: _____

The document was recorded in the United States Patent and Trademark Office at

Reel _____, Frame _____, or for which a copy thereof is attached.

5. From: _____ To: _____

The document was recorded in the United States Patent and Trademark Office at

Reel _____, Frame _____, or for which a copy thereof is attached.

6. From: _____ To: _____

The document was recorded in the United States Patent and Trademark Office at

Reel _____, Frame _____, or for which a copy thereof is attached.

☐ Additional documents in the chain of title are listed on a supplemental sheet(s).

☑ As required by 37 CFR 3.73(c)(1)(i), the documentary evidence of the chain of title from the original owner to the assignee was, or concurrently is being, submitted for recordation pursuant to 37 CFR 3.11.

[NOTE: A separate copy (i.e., a true copy of the original assignment document(s)) must be submitted to Assignment Division in accordance with 37 CFR Part 3, to record the assignment in the records of the USPTO. See MPEP 302.08]

The undersigned (whose title is supplied below) is authorized to act on behalf of the assignee.

/Derek H. Campbell/	March 24, 2022
Signature	Date
Derek H. Campbell	70,608
Printed or Typed Name	Title or Registration Number

Privacy Act Statement

The **Privacy Act of 1974 (P.L. 93-579)** requires that you be given certain information in connection with your submission of the attached form related to a patent application or patent. Accordingly, pursuant to the requirements of the Act, please be advised that: (1) the general authority for the collection of this information is 35 U.S.C. 2(b)(2); (2) furnishing of the information solicited is voluntary; and (3) the principal purpose for which the information is used by the U.S. Patent and Trademark Office is to process and/or examine your submission related to a patent application or patent. If you do not furnish the requested information, the U.S. Patent and Trademark Office may not be able to process and/or examine your submission, which may result in termination of proceedings or abandonment of the application or expiration of the patent.

The information provided by you in this form will be subject to the following routine uses:

1. The information on this form will be treated confidentially to the extent allowed under the Freedom of Information Act (5 U.S.C. 552) and the Privacy Act (5 U.S.C 552a). Records from this system of records may be disclosed to the Department of Justice to determine whether disclosure of these records is required by the Freedom of Information Act.
2. A record from this system of records may be disclosed, as a routine use, in the course of presenting evidence to a court, magistrate, or administrative tribunal, including disclosures to opposing counsel in the course of settlement negotiations.
3. A record in this system of records may be disclosed, as a routine use, to a Member of Congress submitting a request involving an individual, to whom the record pertains, when the individual has requested assistance from the Member with respect to the subject matter of the record.
4. A record in this system of records may be disclosed, as a routine use, to a contractor of the Agency having need for the information in order to perform a contract. Recipients of information shall be required to comply with the requirements of the Privacy Act of 1974, as amended, pursuant to 5 U.S.C. 552a(m).
5. A record related to an International Application filed under the Patent Cooperation Treaty in this system of records may be disclosed, as a routine use, to the International Bureau of the World Intellectual Property Organization, pursuant to the Patent Cooperation Treaty.
6. A record in this system of records may be disclosed, as a routine use, to another federal agency for purposes of National Security review (35 U.S.C. 181) and for review pursuant to the Atomic Energy Act (42 U.S.C. 218(c)).
7. A record from this system of records may be disclosed, as a routine use, to the Administrator, General Services, or his/her designee, during an inspection of records conducted by GSA as part of that agency's responsibility to recommend improvements in records management practices and programs, under authority of 44 U.S.C. 2904 and 2906. Such disclosure shall be made in accordance with the GSA regulations governing inspection of records for this purpose, and any other relevant (*i.e.*, GSA or Commerce) directive. Such disclosure shall not be used to make determinations about individuals.
8. A record from this system of records may be disclosed, as a routine use, to the public after either publication of the application pursuant to 35 U.S.C. 122(b) or issuance of a patent pursuant to 35 U.S.C. 151. Further, a record may be disclosed, subject to the limitations of 37 CFR 1.14, as a routine use, to the public if the record was filed in an application which became abandoned or in which the proceedings were terminated and which application is referenced by either a published application, an application open to public inspection or an issued patent.
9. A record from this system of records may be disclosed, as a routine use, to a Federal, State, or local law enforcement agency, if the USPTO becomes aware of a violation or potential violation of law or regulation.

UNITED STATES PATENT AND TRADEMARK OFFICE

UNITED STATES DEPARTMENT OF COMMERCE
United States Patent and Trademark Office
Address: COMMISSIONER FOR PATENTS
P.O. Box 1450
Alexandria, Virginia 22313-1450
www.uspto.gov

APPLICATION NUMBER	FILING OR 371(C) DATE	FIRST NAMED APPLICANT	ATTY. DOCKET NO./TITLE
17/536,521	11/29/2021	Yaron Brunner	066749-3309

CONFIRMATION NO. 7250

PUBLICATION NOTICE

OC000000132525670

142078
Reinhart (Milwaukee Tool)
ATTN: TRAVIS MCDONNELL, PARALEGAL
1000 NORTH WATER STREET
SUITE 2100
MILWAUKEE, WI 53202

Title: Utility Assembly and Coupling Mechanism

Publication No.US-2022-0081162-A1
Publication Date:03/17/2022

NOTICE OF PUBLICATION OF APPLICATION

The above-identified application will be electronically published as a patent application publication pursuant to 37 CFR 1.211, et seq. The patent application publication number and publication date are set forth above.

The publication may be accessed through the USPTO's publically available Searchable Databases via the Internet at www.uspto.gov. The direct link to access the publication is currently http://www.uspto.gov/patft/.

The publication process established by the Office does not provide for mailing a copy of the publication to applicant. A copy of the publication may be obtained from the Office upon payment of the appropriate fee set forth in 37 CFR 1.19(a)(1). Orders for copies of patent application publications are handled by the USPTO's Public Records Division. The Public Records Division can be reached by telephone at (571) 272-3150 or (800) 972-6382, by facsimile at (571) 273-3250, by mail addressed to the United States Patent and Trademark Office, Public Records Division, Alexandria, VA 22313-1450 or via the Internet.

In addition, information on the status of the application, including the mailing date of Office actions and the dates of receipt of correspondence filed in the Office, may also be accessed via the Internet through the Patent Electronic Business Center at www.uspto.gov using the public side of the Patent Application Information and Retrieval (PAIR) system. The direct link to access this status information is currently https://portal.uspto.gov/pair/PublicPair. Prior to publication, such status information is confidential and may only be obtained by applicant using the private side of PAIR.

Further assistance in electronically accessing the publication, or about PAIR, is available by calling the Patent Electronic Business Center at 1-866-217-9197.

Office of Data Managment, Application Assistance Unit (571) 272-4000, or (571) 272-4200, or 1-888-786-0101

UNITED STATES PATENT AND TRADEMARK OFFICE

UNITED STATES DEPARTMENT OF COMMERCE
United States Patent and Trademark Office
Address: COMMISSIONER FOR PATENTS
P.O. Box 1450
Alexandria, Virginia 22313-1450
www.uspto.gov

APPLICATION NO.	FILING DATE	FIRST NAMED INVENTOR	ATTORNEY DOCKET NO.	CONFIRMATION NO.
17/536,521	11/29/2021	Yaron Brunner	066749-3309	7250

142078 7590 02/18/2022
Reinhart (Milwaukee Tool)
ATTN: TRAVIS MCDONNELL, PARALEGAL
1000 NORTH WATER STREET
SUITE 2100
MILWAUKEE, WI 53202

EXAMINER
WEINERTH, GIDEON R

ART UNIT	PAPER NUMBER
3736	

NOTIFICATION DATE	DELIVERY MODE
02/18/2022	ELECTRONIC

Please find below and/or attached an Office communication concerning this application or proceeding.

The time period for reply, if any, is set in the attached communication.

Notice of the Office communication was sent electronically on above-indicated "Notification Date" to the following e-mail address(es):

IPAdmin@reinhartlaw.com

Office Action Summary	Application No. 17/536,521	Applicant(s) Brunner et al.	
	Examiner GIDEON R WEINERTH	Art Unit 3736	AIA (FITF) Status Yes

-- The MAILING DATE of this communication appears on the cover sheet with the correspondence address --

Period for Reply

A SHORTENED STATUTORY PERIOD FOR REPLY IS SET TO EXPIRE 3 MONTHS FROM THE MAILING DATE OF THIS COMMUNICATION.

- Extensions of time may be available under the provisions of 37 CFR 1.136(a). In no event, however, may a reply be timely filed after SIX (6) MONTHS from the mailing date of this communication.
- If NO period for reply is specified above, the maximum statutory period will apply and will expire SIX (6) MONTHS from the mailing date of this communication.
- Failure to reply within the set or extended period for reply will, by statute, cause the application to become ABANDONED (35 U.S.C. § 133). Any reply received by the Office later than three months after the mailing date of this communication, even if timely filed, may reduce any earned patent term adjustment. See 37 CFR 1.704(b).

Status

1)☐ Responsive to communication(s) filed on _____.

☐ A declaration(s)/affidavit(s) under **37 CFR 1.130(b)** was/were filed on _____.

2a)☐ This action is **FINAL.** 2b) ☑ This action is non-final.

3)☐ An election was made by the applicant in response to a restriction requirement set forth during the interview on _____; the restriction requirement and election have been incorporated into this action.

4)☐ Since this application is in condition for allowance except for formal matters, prosecution as to the merits is closed in accordance with the practice under *Ex parte Quayle*, 1935 C.D. 11, 453 O.G. 213.

Disposition of Claims*

5) ☑ Claim(s) 21-31 is/are pending in the application.

5a) Of the above claim(s) _____ is/are withdrawn from consideration.

6) ☐ Claim(s) _____ is/are allowed.

7) ☑ Claim(s) 21-31 is/are rejected.

8) ☐ Claim(s) _____ is/are objected to.

9) ☐ Claim(s) _____ are subject to restriction and/or election requirement

* If any claims have been determined allowable, you may be eligible to benefit from the **Patent Prosecution Highway** program at a participating intellectual property office for the corresponding application. For more information, please see http://www.uspto.gov/patents/init_events/pph/index.jsp or send an inquiry to **PPHfeedback@uspto.gov.**

Application Papers

10)☐ The specification is objected to by the Examiner.

11)☑ The drawing(s) filed on 29 November 2021 is/are: a)☑ accepted or b)☐ objected to by the Examiner.

Applicant may not request that any objection to the drawing(s) be held in abeyance. See 37 CFR 1.85(a).

Replacement drawing sheet(s) including the correction is required if the drawing(s) is objected to. See 37 CFR 1.121(d).

Priority under 35 U.S.C. § 119

12)☐ Acknowledgment is made of a claim for foreign priority under 35 U.S.C. § 119(a)-(d) or (f).

Certified copies:

a)☐ All b)☐ Some** c)☐ None of the:

1.☐ Certified copies of the priority documents have been received.

2.☐ Certified copies of the priority documents have been received in Application No. _____.

3.☐ Copies of the certified copies of the priority documents have been received in this National Stage application from the International Bureau (PCT Rule 17.2(a)).

** See the attached detailed Office action for a list of the certified copies not received.

Attachment(s)

1) ☑ Notice of References Cited (PTO-892)

2) ☑ Information Disclosure Statement(s) (PTO/SB/08a and/or PTO/SB/08b) Paper No(s)/Mail Date 2/7/2021, 11/29/2021.

3) ☐ Interview Summary (PTO-413) Paper No(s)/Mail Date _____.

4) ☐ Other: _____.

DETAILED ACTION

Notice of Pre-AIA or AIA Status

1. The present application, filed on or after March 16, 2013, is being examined under the first inventor to file provisions of the AIA.

Claim Objections

2. Claim 26 objected to because of the following informalities: Claim 26 recites "… the tongue includes a slanted surface opposite of and parallel to the front surface of the second coupler". It is believes that the slanted surface is opposite ***from*** and parallel to the front surface.

3. Appropriate correction is required.

Double Patenting

4. The nonstatutory double patenting rejection is based on a judicially created doctrine grounded in public policy (a policy reflected in the statute) so as to prevent the unjustified or improper timewise extension of the "right to exclude" granted by a patent and to prevent possible harassment by multiple assignees. A nonstatutory double patenting rejection is appropriate where the conflicting claims are not identical, but at least one examined application claim is not patentably distinct from the reference claim(s) because the examined application claim is either anticipated by, or would have been obvious over, the reference claim(s). See, e.g., *In re Berg*, 140 F.3d 1428, 46 USPQ2d 1226 (Fed. Cir. 1998); *In re Goodman*, 11 F.3d 1046, 29 USPQ2d 2010 (Fed. Cir. 1993); *In re Longi*, 759 F.2d 887, 225 USPQ 645 (Fed. Cir. 1985); *In re Van Ornum*, 686 F.2d 937, 214 USPQ 761 (CCPA 1982); *In re Vogel*, 422 F.2d 438, 164 USPQ 619 (CCPA 1970); *In re Thorington*, 418 F.2d 528, 163 USPQ 644 (CCPA 1969).

A timely filed terminal disclaimer in compliance with 37 CFR 1.321(c) or 1.321(d) may be used to overcome an actual or provisional rejection based on nonstatutory double patenting provided the reference application or patent either is shown to be commonly owned with the examined application, or claims an invention made as a result of activities undertaken within the scope of a joint research agreement. See MPEP § 717.02 for applications subject to examination under the first inventor to file provisions of the AIA as explained in MPEP § 2159. See MPEP § 2146 *et seq.* for applications not subject to examination under the first inventor to file provisions of the AIA. A terminal disclaimer must be signed in compliance with 37 CFR 1.321(b).

The USPTO Internet website contains terminal disclaimer forms which may be used. Please visit www.uspto.gov/patent/patents-forms. The filing date of the application in which the form is filed determines what form (e.g., PTO/SB/25, PTO/SB/26, PTO/AIA/25, or PTO/AIA/26) should be used. A web-based eTerminal Disclaimer may be filled out completely online using web-screens. An eTerminal Disclaimer that meets all requirements is auto-processed and approved immediately upon submission. For more information about eTerminal Disclaimers, refer to www.uspto.gov/patents/process/file/efs/guidance/eTD-info-I.jsp.

5. Claims 21-31 are rejected on the ground of nonstatutory double patenting as being unpatentable over claims 1-12 of U.S. Patent No. 10583962 in view of Bensman (US 2013/0127129).

6. US Patent 10583962 discloses the same utility assembly and latching mechanism but does not explicitly disclose a toggle locking latch. However, as seen in Bensman Element 27, it would have been obvious for one having ordinary skill in the art

to include toggle locking latches in similar stacking container systems to keep a stacked container lid in a closed position (Paragraph 0035).

7. Claims 21-31 are provisionally rejected on the ground of nonstatutory double patenting as being unpatentable over various claims of co-pending Applications No. 15826232, 16216724, 16752441, 16893591, 17391904, 17132609, 17167925, in view of Bensman (US 2013/0127129).

8. The applications discloses the same utility assembly and latching mechanism but does not explicitly disclose a toggle locking latch. However, as seen in Bensman Element 27, it would have been obvious for one having ordinary skill in the art to include toggle locking latches in similar stacking container systems to keep a stacked container lid in a closed position (Paragraph 0035).

This is a provisional nonstatutory double patenting rejection.

Claim Rejections - 35 USC § 112

9. The following is a quotation of 35 U.S.C. 112(b):

> (b) CONCLUSION.—The specification shall conclude with one or more claims particularly pointing out and distinctly claiming the subject matter which the inventor or a joint inventor regards as the invention.

The following is a quotation of 35 U.S.C. 112 (pre-AIA), second paragraph:

> The specification shall conclude with one or more claims particularly pointing out and distinctly claiming the subject matter which the applicant regards as his invention.

10. Claims 22-24 is rejected under 35 U.S.C. 112(b) or 35 U.S.C. 112 (pre-AIA), second paragraph, as being indefinite for failing to particularly point out and distinctly claim the subject matter which the inventor or a joint inventor (or for applications subject to pre-AIA 35 U.S.C. 112, the applicant), regards as the invention.

11. Claim 22 recites the limitation "the latch" in Line 2 of the claim. There is insufficient antecedent basis for this limitation in the claim.

12. Claim 21 recites BOTH a toggle locking latch AND a locking latch. Claim 22 must be amended to properly identify *which* locking latch.

13. Similarly, Claims 23 and 24 also recite a locking latch. It is recommended to amend claim 21 to recite "… a ***vertical*** locking latch coupled to the other of the first container or the second container, the ***vertical*** locking latch positioned in a locked position…." to distinguish from the ***toggle*** locking latch. Claims 22-24 appear to refer exclusively to the vertical locking latch and should be amended accordingly.

Conclusion

14. The prior art made of record and not relied upon is considered pertinent to applicant's disclosure.

15. Any inquiry concerning this communication or earlier communications from the examiner should be directed to GIDEON R. WEINERTH whose telephone number is (571)270-5121. The examiner can normally be reached Monday-Friday 10AM-6PM EST.

Examiner interviews are available via telephone, in-person, and video conferencing using a USPTO supplied web-based collaboration tool. To schedule an interview, applicant is encouraged to use the USPTO Automated Interview Request (AIR) at http://www.uspto.gov/interviewpractice.

If attempts to reach the examiner by telephone are unsuccessful, the examiner's supervisor, Greg Pickett can be reached on (571) 272-4560. The fax phone number for the organization where this application or proceeding is assigned is 571-273-8300.

Information regarding the status of published or unpublished applications may be obtained from Patent Center. Unpublished application information in Patent Center is

available to registered users. To file and manage patent submissions in Patent Center, visit: https://patentcenter.uspto.gov. Visit https://www.uspto.gov/patents/apply/patent-center for more information about Patent Center and https://www.uspto.gov/patents/docx for information about filing in DOCX format. For additional questions, contact the Electronic Business Center (EBC) at 866-217-9197 (toll-free). If you would like assistance from a USPTO Customer Service Representative, call 800-786-9199 (IN USA OR CANADA) or 571-272-1000.

/GIDEON R WEINERTH/
Examiner, Art Unit 3736

Notice of References Cited	Application/Control No. 17/536,521	Applicant(s)/Patent Under Reexamination Brunner et al.	
	Examiner GIDEON R WEINERTH	Art Unit 3736	Page 1 of 2

U.S. PATENT DOCUMENTS

*		Document Number Country Code-Number-Kind Code	Date MM-YYYY	Name	CPC Classification	US Classification
*	A	US-D437484-S	02-2001	Tiramani; Paolo		D3/276
*	B	US-20020030425-A1	03-2002	Tiramani, Paolo B.	B25H3/023	280/47.35
*	C	US-20030075468-A1	04-2003	Story, Dave	B25H3/02	206/373
*	D	US-20070273114-A1	11-2007	Katz; Amir	B62B1/12	280/47.26
*	E	US-20090288970-A1	11-2009	Katz; Amir	B25H3/00	220/252
*	F	US-20140062042-A1	03-2014	Wagner; Charles E.	A45C5/14	190/18R
*	G	US-20140197059-A1	07-2014	EVANS; Richard Douglas	B25H3/02	206/349
*	H	US-20160213115-A1	07-2016	GONITIANER; Reiner	A45C13/10	1/1
*	I	US-20170158216-A1	06-2017	Yahav; Michal	B62B5/0013	1/1
*	J	US-RE47022-E	09-2018	Sosnovsky; David	B25H3/02	1/1
*	K	US-D876833-S	03-2020	Brunner; Yaron		D3/905
*	L	US-D897103-S	09-2020	Brunner; Yaron		D3/294
*	M	US-D918584-S	05-2021	Brunner; Yaron		D3/294

FOREIGN PATENT DOCUMENTS

*		Document Number Country Code-Number-Kind Code	Date MM-YYYY	Country	Name	CPC Classification
	N					
	O					
	P					
	Q					
	R					
	S					
	T					

NON-PATENT DOCUMENTS

*		Include as applicable: Author, Title Date, Publisher, Edition or Volume, Pertinent Pages)
	U	
	V	
	W	
	X	

*A copy of this reference is not being furnished with this Office action. (See MPEP § 707.05(a).)
Dates in MM-YYYY format are publication dates. Classifications may be US or foreign.

Notice of References Cited	Application/Control No. 17/536,521	Applicant(s)/Patent Under Reexamination Brunner et al.	
	Examiner GIDEON R WEINERTH	Art Unit 3736	Page 2 of 2

U.S. PATENT DOCUMENTS

*		Document Number Country Code-Number-Kind Code	Date MM-YYYY	Name	CPC Classification	US Classification
*	A	US-D919296-S	05-2021	Brunner; Yaron		D3/307
*	B	US-D920671-S	06-2021	Brunner; Yaron		D3/294
*	C	US-20210221561-A1	07-2021	Davidian; Richard M.	B65D43/163	1/1
*	D	US-20210316909-A1	10-2021	Vargo; Matthew	B65D1/40	1/1
*	E	US-11155382-B1	10-2021	Cai; Shujun	F16B5/0084	1/1
*	F	US-D932186-S	10-2021	Brunner; Yaron		D3/294
*	G	US-D936030-S	11-2021	Lee; Timothy Tin Pak		D14/188
*	H	US-11230410-B2	01-2022	Brunner; Yaron	B65D21/0228	1/1
*	I	US-D941020-S	01-2022	Brunner; Yaron		D3/294
	J					
	K					
	L					
	M					

FOREIGN PATENT DOCUMENTS

*		Document Number Country Code-Number-Kind Code	Date MM-YYYY	Country	Name	CPC Classification
	N					
	O					
	P					
	Q					
	R					
	S					
	T					

NON-PATENT DOCUMENTS

*		Include as applicable: Author, Title Date, Publisher, Edition or Volume, Pertinent Pages)
	U	
	V	
	W	
	X	

*A copy of this reference is not being furnished with this Office action. (See MPEP § 707.05(a).)
Dates in MM-YYYY format are publication dates. Classifications may be US or foreign.

Index of Claims	Application/Control No.	Applicant(s)/Patent Under Reexamination
	17/536,521	Brunner et al.
	Examiner	**Art Unit**
	GIDEON R WEINERTH	3736

✓	Rejected	-	Cancelled	N	Non-Elected	A	Appeal
=	Allowed	÷	Restricted	I	Interference	O	Objected

CLAIMS

☐ Claims renumbered in the same order as presented by applicant ☐ CPA ☐ T.D. ☐ R.1.47

CLAIM		DATE								
Final	Original	02/15/2022								
	21	✓								
	22	✓								
	23	✓								
	24	✓								
	25	✓								
	26	✓								
	27	✓								
	28	✓								
	29	✓								
	30	✓								
	31	✓								

Search Notes	Application/Control No.	Applicant(s)/Patent Under Reexamination
	17/536,521	Brunner et al.
	Examiner	**Art Unit**
	GIDEON R WEINERTH	3736

CPC - Searched*		
Symbol	**Date**	**Examiner**
A45C5/14	02/14/2022	GW
A45C7/005,0045	02/14/2022	GW
A45C13/02	02/14/2022	GW
A45F3/10	02/14/2022	GW
B25H1/04	02/14/2022	GW
B25H3/02,021,023	02/14/2022	GW
B62B1/14	02/14/2022	GW
B62B5/067	02/14/2022	GW
B65D21/0228,0223,0209,	02/14/2022	GW
B65D2255/00	02/14/2022	GW
B65H2701/533	02/14/2022	GW

CPC Combination Sets - Searched*		
Symbol	**Date**	**Examiner**

US Classification - Searched*			
Class	**Subclass**	**Date**	**Examiner**
220	4.27	02/14/2022	GW

* See search history printout included with this form or the SEARCH NOTES box below to determine the scope of the search.

Search Notes		
Search Notes	**Date**	**Examiner**
Update search, inventor search, cross reference search from co-pending applications to same inventor	02/14/2022	GW

/GIDEON R WEINERTH/ Examiner, Art Unit 3736	

Search Notes	Application/Control No.	Applicant(s)/Patent Under Reexamination
	17/536,521	Brunner et al.
	Examiner	**Art Unit**
	GIDEON R WEINERTH	3736

Interference Search			
US Class/CPC Symbol	**US Subclass/CPC Group**	**Date**	**Examiner**

/GIDEON R WEINERTH/ Examiner, Art Unit 3736	

ALL REFERENCES CONSIDERED EXCEPT WHERE LINED THROUGH. /G.R.W/

Approved for use through 03/31/2007. OMB 0651-0031
U.S. Patent and Trademark Office: U.S. DEPARTMENT OF COMMERCE

Under the Paperwork Reduction Act of 1995, no persons are required to respond to a collection of information unless it contains a valid OMB control number.

Substitute for form 1449/PTO

INFORMATION DISCLOSURE STATEMENT BY APPLICANT

Date Submitted: November 29, 2021

(use as many sheets as necessary)

Sheet 1 of 19

Complete if Known	
Application Number	To be determined
Filing Date	November 29, 2021
First Named Inventor	Yaron Brunner
Art Unit	To be determined
Examiner Name	To be determined
Attorney Docket Number	066749-3309

U.S. PATENT DOCUMENTS

Examiner Initials*	Cite No.[1]	Document Number Number-Kind Code[2] (*if known*)	Publication Date MM-DD-YYYY	Name of Patentee or Applicant of Cited Document	Pages, Columns, Lines, Where Relevant Passages or Relevant Figures Appear
	A1	495,537	04-18-1893	Westerman	
	A2	509,839	11-28-1893	Bowley	
	A3	1,081,378	12-16-1913	Freeman	
	A4	1,084,360	01-13-1914	Rahm	
	A5	2,042,387	05-26-1936	COBB DAVID F	
	A6	2,124,541	07-26-1938	Cassey	
	A7	2,430,200	11-04-1947	Wilson Winfred E.	
	A8	2,939,613	06-07-1960	Herman et al.	
	A9	2,970,358	02-07-1961	E. C. Elsner	
	A10	3,117,692	01-14-1964	Carpenter et al.	
	A11	3,225,865	12-28-1965	J. W. Downey	
	A12	3,423,786	01-28-1969	Arias, Jr. et al.	
	A13	3,424,334	01-28-1969	Goltz	
	A14	3,506,321	04-14-1970	Hampel	
	A15	3,514,170	05-26-1970	SHEWCHUK DONALD	
	A16	3,743,372	07-03-1973	Ruggerone; Guiseffe	
	A17	3,935,613	02-03-1976	Kaneko	
	A18	3,974,898	08-17-1976	Tullis et al.	
	A19	3,999,818	12-28-1976	Schankler	
	A20	4,122,925	10-31-1978	Schultheiss	
	A21	4,168,076	09-18-1979	Johnson	
	A22	4,243,279	01-06-1981	Ackeret	
	A23	4,673,070	06-16-1987	Ambal	
	A24	4,805,859	02-21-1989	Hudson; Don	
	A25	4,817,237	04-04-1989	Murphy	
	A26	4,929,973	05-29-1990	Nakatani	
	A27	4,971,201	11-20-1990	Sathre	
	A28	5,035,445	07-30-1991	Poulin	
	A29	5,098,235	03-24-1992	Svetlik et al.	
	A30	5,105,947	04-21-1992	Wise, Thomas W.	

Examiner Signature	/GIDEON R WEINERTH/	Date Considered	02/12/2022

*EXAMINER: Initial if reference considered, whether or not citation is in conformance with MPEP 609. Draw line through citation if not in conformance and not considered. Include copy of this form with next communication to applicant. 1 Applicant's unique citation designation number (optional). 2 See Kinds Codes of USPTO Patent Documents at www.uspto.gov or MPEP 901.04. 3 Enter Office that issued the document, by the two-letter code (WIPO Standard ST.3). 4 For Japanese patent documents, the indication of the year of the reign of the Emperor must precede the serial number of the patent document. 5 Kind of document by the appropriate symbols as indicated on the document under WIPO Standard ST.16 if possible. 6 Applicant is to place a check mark here if English language Translation is attached.

This collection of information is required by 37 CFR 1.97 and 1.98. The information is required to obtain or retain a benefit by the public which is to file (and by the USPTO to process) an application. Confidentiality is governed by 35 U.S.C. 122 and 37 CFR 1.14. This collection is estimated to take 2 hours to complete, including gathering, preparing, and submitting the completed application form to the USPTO. Time will vary depending upon the individual case. Any comments on the amount of time you require to complete this form and/or suggestions for reducing this burden, should be sent to the Chief Information Officer, U.S. Patent and Trademark Office, P.O. Box 1450, Alexandria, VA 22313-1450. DO NOT SEND FEES OR COMPLETED FORMS TO THIS ADDRESS. **SEND TO: Commissioner for Patents, P.O. Box 1450, Alexandria, VA 22313-1450**.

If you need assistance in completing the form, call 1-800-PTO-9199 (1-800-786-9199) and select option 2.

ALL REFERENCES CONSIDERED EXCEPT WHERE LINED THROUGH. /G.R.W/

PTO/SB/08 (09-06)
Approved for use through 03/31/2007. OMB 0651-0031
U.S. Patent and Trademark Office: U.S. DEPARTMENT OF COMMERCE

Under the Paperwork Reduction Act of 1995, no persons are required to respond to a collection of information unless it contains a valid OMB control number.

Substitute for form 1449/PTO

INFORMATION DISCLOSURE STATEMENT BY APPLICANT

Date Submitted: November 29, 2021

(use as many sheets as necessary)

Sheet 2 of 19

Complete if Known	
Application Number	To be determined
Filing Date	November 29, 2021
First Named Inventor	Yaron Brunner
Art Unit	To be determined
Examiner Name	To be determined
Attorney Docket Number	066749-3309

U.S. PATENT DOCUMENTS

Examiner Initials*	Cite No.[1]	Document Number	Publication Date MM-DD-YYYY	Name of Patentee or Applicant of Cited Document	Pages, Columns, Lines, Where Relevant
	A31	5,240,264	08-31-1993	Williams	
	A32	5,282,554	02-01-1994	Thomas; Jan B.	
	A33	5,301,829	04-12-1994	Chrisco	
	A34	5,325,966	07-05-1994	Chang	
	A35	5,356,038	10-18-1994	Banks	
	A36	5,356,105	10-18-1994	Andrews	
	A37	5,375,709	12-27-1994	Petro	
	A38	5,429,235	07-04-1995	Chen	
	A39	5,429,260	07-041995	Vallers; Gary L.	
	A40	5,433,416	07-18-1995	Johnson	
	A41	5,538,213	07-23-1996	Brown Office Systems Inc.	
	A42	5,595,228	01-21-1997	Meisner et al.	
	A43	5,608,603	03-04-1997	Su	
	A44	5,622,296	04-22-1997	Pirhonen et al.	
	A45	5,628,443	05-13-1997	Deutsch	
	A46	5,653,366	08-05-1997	Liserre; Tony	
	A47	5,653,366	08-05-1997	Liserre	
	A48	5,664,292	09-09-1997	Chen	
	A49	5,775,046	07-07-1998	Fanger; David J.	
	A50	5,797,617	08-25-1998	Lin Shiou Chang	
	A51	5,850,996	12-22-1998	Liang	
	A52	5,890,613	04-06-1999	Williams; Warren Bret	
	A53	5,951,037	09-14-1999	Hsieh Hung-Ching	
	A54	5,957,421	09-28-1999	Barbour; Lee	
	A55	5,988,473	11-23-1999	Hagan et al.	
	A56	6,050,660	04-18-2000	Gurley	
	A57	6,082,539	07-04-2000	Lee	
	A58	6,082,687	07-04-2000	Kump et al.	
	A59	6,085,925	07-11-2000	Chung	
	A60	6,098,858	08-08-2000	Laugesen	
	A61	6,109,627	08-29-2000	Sung Haan Be	
	A62	6,176,559	01-23-2001	Tiramani et al.	

Examiner Signature	/GIDEON R WEINERTH/	Date Considered	02/12/2022

*EXAMINER: Initial if reference considered, whether or not citation is in conformance with MPEP 609. Draw line through citation if not in conformance and not considered. Include copy of this form with next communication to applicant. 1 Applicant's unique citation designation number (optional). 2 See Kinds Codes of USPTO Patent Documents at www.uspto.gov or MPEP 901.04. 3 Enter Office that issued the document, by the two-letter code (WIPO Standard ST.3). 4 For Japanese patent documents, the indication of the year of the reign of the Emperor must precede the serial number of the patent document. 5 Kind of document by the appropriate symbols as indicated on the document under WIPO Standard ST.16 if possible. 6 Applicant is to place a check mark here if English language Translation is attached.

This collection of information is required by 37 CFR 1.97 and 1.98. The information is required to obtain or retain a benefit by the public which is to file (and by the USPTO to process) an application. Confidentiality is governed by 35 U.S.C. 122 and 37 CFR 1.14. This collection is estimated to take 2 hours to complete, including gathering, preparing, and submitting the completed application form to the USPTO. Time will vary depending upon the individual case. Any comments on the amount of time you require to complete this form and/or suggestions for reducing this burden, should be sent to the Chief Information Officer, U.S. Patent and Trademark Office, P.O. Box 1450, Alexandria, VA 22313-1450. DO NOT SEND FEES OR COMPLETED FORMS TO THIS ADDRESS. **SEND TO: Commissioner for Patents, P.O. Box 1450, Alexandria, VA 22313-1450**.

If you need assistance in completing the form, call 1-800-PTO-9199 (1-800-786-9199) and select option 2.

PTO/SB/08 (09-06)
Approved for use through 03/31/2007. OMB 0651-0031
U.S. Patent and Trademark Office: U.S. DEPARTMENT OF COMMERCE

Under the Paperwork Reduction Act of 1995, no persons are required to respond to a collection of information unless it contains a valid OMB control number.

Substitute for form 1449/PTO

INFORMATION DISCLOSURE STATEMENT BY APPLICANT

Date Submitted: November 29, 2021

(use as many sheets as necessary)

Sheet 3 of 19

Complete if Known	
Application Number	To be determined
Filing Date	November 29, 2021
First Named Inventor	Yaron Brunner
Art Unit	To be determined
Examiner Name	To be determined
Attorney Docket Number	066749-3309

U.S. PATENT DOCUMENTS

Examiner Initials*	Cite No.[1]	Document Number	Publication Date MM-DD-YYYY	Name of Patentee or Applicant of Cited Document	Pages, Columns, Lines, Where Relevant
	A63	6,305,498	10-23-2001	Itzkovitch	
	A64	6,347,847	02-19-2002	Tiramani et al.	
	A65	6,367,631	04-09-2002	Steigerwald	
	A66	6,371,320	04-16-2002	Sagal	
	A67	6,371,424	04-16-2002	Shaw	
	A68	6,431,580	08-13-2002	Darren J. Kady	
	A69	6,547,347	04-15-2003	Saito; Yoshiyuki	
	A70	6,601,930	08-05-2003	Tiramani et al.	
	A71	6,619,772	09-16-2003	Dierbeck	
	A72	6,637,707	10-28-2003	Gates; George D.	
	A73	6,641,013	11-04-2003	Oise	
	A74	6,889,838	05-10-2005	Meier et al.	
	A75	6,945,546	09-20-2005	Edward G. Guirlinger	
	A76	6,948,691	09-27-2005	Brock et al.	
	A77	6,983,946	01-10-2006	Sullivan et al.	
	A78	7,044,484	05-16-2006	Wang	
	A79	7,066,475	06-27-2006	Bret E. Barnes	
	A80	7,077,372	07-18-2006	Moran	
	A81	7,090,085	08-15-2006	Vicendese et al.	
	A82	7,147,243	12-12-2006	Darren Kady	
	A83	7,152,752	12-26-2006	Kurtenbach	
	A84	7,172,164	02-06-2007	Fuelling; Richard A.	
	A85	7,219,969	05-22-2007	Bezzubov	
	A86	7,263,742	09-04-2007	Guido Valentini	
	A87	7,367,571	05-06-2008	Nichols	
	A88	7,503,569	03-17-2009	Duvigneau	
	A89	7,658,887	02-09-2010	Hovatter	
	A90	7,690,856	04-06-2010	Mortensen	
	A91	7,779,764	08-24-2010	NAIDU et al.	
	A92	7,780,026	08-24-2010	Zuckerman	
	A93	7,837,165	11-23-2010	Stone; Mark Andrew	
	A94	7,841,144	11-30-2010	Pervan; Darko	

Examiner Signature	/GIDEON R WEINERTH/	Date Considered	02/12/2022

*EXAMINER: Initial if reference considered, whether or not citation is in conformance with MPEP 609. Draw line through citation if not in conformance and not considered. Include copy of this form with next communication to applicant. 1 Applicant's unique citation designation number (optional). 2 See Kinds Codes of USPTO Patent Documents at www.uspto.gov or MPEP 901.04. 3 Enter Office that issued the document, by the two-letter code (WIPO Standard ST.3). 4 For Japanese patent documents, the indication of the year of the reign of the Emperor must precede the serial number of the patent document. 5 Kind of document by the appropriate symbols as indicated on the document under WIPO Standard ST.16 if possible. 6 Applicant is to place a check mark here if English language Translation is attached.

This collection of information is required by 37 CFR 1.97 and 1.98. The information is required to obtain or retain a benefit by the public which is to file (and by the USPTO to process) an application. Confidentiality is governed by 35 U.S.C. 122 and 37 CFR 1.14. This collection is estimated to take 2 hours to complete, including gathering, preparing, and submitting the completed application form to the USPTO. Time will vary depending upon the individual case. Any comments on the amount of time you require to complete this form and/or suggestions for reducing this burden, should be sent to the Chief Information Officer, U.S. Patent and Trademark Office, P.O. Box 1450, Alexandria, VA 22313-1450. DO NOT SEND FEES OR COMPLETED FORMS TO THIS ADDRESS. **SEND TO: Commissioner for Patents, P.O. Box 1450, Alexandria, VA 22313-1450**.

If you need assistance in completing the form, call 1-800-PTO-9199 (1-800-786-9199) and select option 2.

ALL REFERENCES CONSIDERED EXCEPT WHERE LINED THROUGH. /G.R.W/

PTO/SB/08 (09-06)
Approved for use through 03/31/2007. OMB 0651-0031
U.S. Patent and Trademark Office: U.S. DEPARTMENT OF COMMERCE

Under the Paperwork Reduction Act of 1995, no persons are required to respond to a collection of information unless it contains a valid OMB control number.

Substitute for form 1449/PTO

INFORMATION DISCLOSURE STATEMENT BY APPLICANT

Date Submitted: November 29, 2021

(use as many sheets as necessary)

Sheet 4 of 19

Complete if Known	
Application Number	To be determined
Filing Date	November 29, 2021
First Named Inventor	Yaron Brunner
Art Unit	To be determined
Examiner Name	To be determined
Attorney Docket Number	066749-3309

U.S. PATENT DOCUMENTS

Examiner Initials*	Cite No.[1]	Document Number	Publication Date MM-DD-YYYY	Name of Patentee or Applicant of Cited Document	Pages, Columns, Lines, Where Relevant
	A95	8,028,845	10-04-2011	Himes	
	A96	8,132,819	03-13-2012	Landau; Eitan	
	A97	8,177,463	05-15-2012	Walker; Peter J	
	A98	8,191,910	06-05-2012	Landau et al.	
	A99	8,448,829	05-28-2013	Watanabe; Takata	
	A100	8,454,033	06-04-2013	Tsai	
	A101	8,459,495	06-11-2013	Koenig; Andreas	
	A102	8,505,729	08-13-2013	Sosnovsky et al.	
	A103	8,567,796	10-29-2013	Bar-Erez et al.	
	A104	8,602,217	12-10-2013	Sosnovsky et al.	
	A105	8,640,913	02-04-2014	Berendes	
	A106	8,677,661	03-25-2014	Michels; Markus	
	A107	8,689,396	04-08-2014	Melvin E. Wolfe	
	A108	8,714,355	05-06-2014	Huang	
	A109	8,813,960	08-26-2014	Fjelland; Douglas J.	
	A110	8,851,282	10-07-2014	Brunner	
	A111	8,875,888	11-04-2014	Koenig; Andreas	
	A112	8,925,752	01-06-2015	Smith	
	A113	8,979,100	03-17-2015	Bensman et al.	
	A114	8,985,922	03-24-2015	Neumann	
	A115	9,132,543	09-15-2015	Bar-Erez; Sharon	
	A116	9,506,489	11-29-2016	Ko; Kenneth H.	
	A117	9,511,491	12-06-2016	Brunner	
	A118	9,551,367	01-24-2017	Shieh	
	A119	9,566,990	02-14-2017	Bar-Erez; Sharon	
	A120	9,616,562	04-11-2017	Hoppe; Christopher S.	
	A121	9,643,629	05-09-2017	The Stanley Works Israel Ltd.	
	A122	9,701,443	07-11-2017	Wang; Tzu-Chien	
	A123	9,725,209	08-08-2017	Ben-Gigi	
	A124	9,850,029	12-26-2017	Brunner	
	A125	9,872,562	01-23-2018	Brunner; Varon	

Examiner Signature	/GIDEON R WEINERTH/	Date Considered	02/12/2022

*EXAMINER: Initial if reference considered, whether or not citation is in conformance with MPEP 609. Draw line through citation if not in conformance and not considered. Include copy of this form with next communication to applicant. 1 Applicant's unique citation designation number (optional). 2 See Kinds Codes of USPTO Patent Documents at www.uspto.gov or MPEP 901.04. 3 Enter Office that issued the document, by the two-letter code (WIPO Standard ST.3). 4 For Japanese patent documents, the indication of the year of the reign of the Emperor must precede the serial number of the patent document. 5 Kind of document by the appropriate symbols as indicated on the document under WIPO Standard ST.16 if possible. 6 Applicant is to place a check mark here if English language Translation is attached.

This collection of information is required by 37 CFR 1.97 and 1.98. The information is required to obtain or retain a benefit by the public which is to file (and by the USPTO to process) an application. Confidentiality is governed by 35 U.S.C. 122 and 37 CFR 1.14. This collection is estimated to take 2 hours to complete, including gathering, preparing, and submitting the completed application form to the USPTO. Time will vary depending upon the individual case. Any comments on the amount of time you require to complete this form and/or suggestions for reducing this burden, should be sent to the Chief Information Officer, U.S. Patent and Trademark Office, P.O. Box 1450, Alexandria, VA 22313-1450. DO NOT SEND FEES OR COMPLETED FORMS TO THIS ADDRESS. **SEND TO: Commissioner for Patents, P.O. Box 1450, Alexandria, VA 22313-1450**.

If you need assistance in completing the form, call 1-800-PTO-9199 (1-800-786-9199) and select option 2.

ALL REFERENCES CONSIDERED EXCEPT WHERE LINED THROUGH. /G.R.W/

Under the Paperwork Reduction Act of 1995, no persons are required to respond to a collection of information unless it contains a valid OMB control number.

Substitute for form 1449/PTO

INFORMATION DISCLOSURE STATEMENT BY APPLICANT

Date Submitted: November 29, 2021

(use as many sheets as necessary)

Sheet 5 of 19

Complete if Known	
Application Number	To be determined
Filing Date	November 29, 2021
First Named Inventor	Yaron Brunner
Art Unit	To be determined
Examiner Name	To be determined
Attorney Docket Number	066749-3309

U.S. PATENT DOCUMENTS

Examiner Initials*	Cite No.[1]	Document Number	Publication Date MM-DD-YYYY	Name of Patentee or Applicant of Cited Document	Pages, Columns, Lines, Where Relevant
	A126	9,888,752	02-13-2018	Den Boer et al.	
	A127	10,106,180	10-23-2018	Bar-Erez et al.	
	A128	10,222,172	03-05-2019	Melville	
	A129	10,434,638	10-08-2019	Tsai	
	A130	10,583,962	03-10-2020	Brunner et al.	
	A131	10,603,783	03-31-2020	Brocket et al.	
	A132	10,703,534	07-07-2020	Brunner et al.	
	A133	10,750,833	08-25-2020	Burchia	
	A134	10,758,065	09-01-2020	Penalver, Jr.; John	
	A135	10,793,172	10-06-2020	Brunner	
	A136	10,829,269	11-10-2020	Gonitianer et al.	
	A137	10,933,501	03-02-2021	Bisson	
	A138	10,933,501	03-02-2021	Bisson	
	A139	10,962,218	03-30-2021	Plato et al.	
	A140	10,981,696	04-20-2021	Brunner et al.	
	A141	11,008,136	05-18-2021	Brunner et al.	
	A142	11,059,631	07-13-2021	Brunner et al.	
	A143	2002/0000440	01-03-2002	Sagal et al.	
	A144	2002/0125072	09-12-2002	Levy	
	A145	2002/0171228	11-21-2002	Kady	
	A146	2003/0094392	05-22-2003	Meier et al.	
	A147	2003/0094393	05-22-2003	Sahm, Ill	
	A148	2003/0115715	06-26-2003	Guido Valentini	
	A149	2003/0146589	08-07-2003	Jarko et al.	
	A150	2003/0184034	10-02-2003	Pfeiffer	
	A151	2003/0205877	11-06-2003	Verna et al.	
	A152	2004/0103494	06-03-2004	Valentini	
	A153	2004/0195793	10-07-2004	Sullivan, Hugh C., et al.	
	A154	2004/0206656	10-21-2004	Dubois et al.	
	A155	2005/0015928	01-27-2005	Arsenault et al.	
	A156	2005/0062244	03-24-2005	Guirlinger	
	A157	2005/0104308	05-19-2005	Barnes	

Examiner Signature	/GIDEON R WEINERTH/	Date Considered	02/12/2022

*EXAMINER: Initial if reference considered, whether or not citation is in conformance with MPEP 609. Draw line through citation if not in conformance and not considered. Include copy of this form with next communication to applicant. 1 Applicant's unique citation designation number (optional). 2 See Kinds Codes of USPTO Patent Documents at www.uspto.gov or MPEP 901.04. 3 Enter Office that issued the document, by the two-letter code (WIPO Standard ST.3). 4 For Japanese patent documents, the indication of the year of the reign of the Emperor must precede the serial number of the patent document. 5 Kind of document by the appropriate symbols as indicated on the document under WIPO Standard ST.16 if possible. 6 Applicant is to place a check mark here if English language Translation is attached.

This collection of information is required by 37 CFR 1.97 and 1.98. The information is required to obtain or retain a benefit by the public which is to file (and by the USPTO to process) an application. Confidentiality is governed by 35 U.S.C. 122 and 37 CFR 1.14. This collection is estimated to take 2 hours to complete, including gathering, preparing, and submitting the completed application form to the USPTO. Time will vary depending upon the individual case. Any comments on the amount of time you require to complete this form and/or suggestions for reducing this burden, should be sent to the Chief Information Officer, U.S. Patent and Trademark Office, P.O. Box 1450, Alexandria, VA 22313-1450. DO NOT SEND FEES OR COMPLETED FORMS TO THIS ADDRESS. **SEND TO: Commissioner for Patents, P.O. Box 1450, Alexandria, VA 22313-1450**.

If you need assistance in completing the form, call 1-800-PTO-9199 (1-800-786-9199) and select option 2.

ALL REFERENCES CONSIDERED EXCEPT WHERE LINED THROUGH. /G.R.W/

PTO/SB/08 (09-06)
Approved for use through 03/31/2007. OMB 0651-0031
U.S. Patent and Trademark Office: U.S. DEPARTMENT OF COMMERCE

Under the Paperwork Reduction Act of 1995, no persons are required to respond to a collection of information unless it contains a valid OMB control number.

Substitute for form 1449/PTO

INFORMATION DISCLOSURE STATEMENT BY APPLICANT

Date Submitted: November 29, 2021

(use as many sheets as necessary)

Sheet 6 of 19

Complete if Known	
Application Number	To be determined
Filing Date	November 29, 2021
First Named Inventor	Yaron Brunner
Art Unit	To be determined
Examiner Name	To be determined
Attorney Docket Number	066749-3309

U.S. PATENT DOCUMENTS

Examiner Initials*	Cite No.[1]	Document Number	Publication Date MM-DD-YYYY	Name of Patentee or Applicant of Cited Document	Pages, Columns, Lines, Where Relevant
	A158	2005/0139745	06-30-2005	Liao, Chi-Cheng	
	A159	2005/0242144	11-03-2005	Panosian, Michael	
	A160	2006/0006770	01-12-2006	Valentini	
	A161	2006/0027475	02-09-2006	Gleason et al.	
	A162	2006/0038367	02-23-2006	Ferraro; Frank A.	
	A163	2006/0076261	04-13-2006	Kurtenbach	
	A164	2006/0119060	06-08-2006	Sullivan et al.	
	A165	2006/0186624	08-24-2006	Kady, Darren	
	A166	2006/0254946	11-16-2006	Becklin	
	A167	2007/0068757	03-29-2007	Tan	
	A168	2007/0090616	04-26-2007	Tompkins	
	A169	2007/0145700	06-28-2007	Ambrose et al.	
	A170	2007/0194543	08-23-2007	Duvigneau	
	A171	2008/0060953	03-13-2008	Ghassan	
	A172	2008/0104921	05-08-2008	Pervan; Darko	
	A173	2008/0115312	05-22-2008	DiPasquale et al.	
	A174	2008/0121547	05-29-2008	Dur et al.	
	A175	2008/0134607	06-12-2008	Pervan; Darko	
	A176	2008/0169739	07-17-2008	Goldenberg; Ruth	
	A177	2008/0271280	11-06-2008	FUCHS FRANK et al.	
	A178	2008/0277221	11-13-2008	Josefson; Mark L.	
	A179	2008/0296443	12-04-2008	Lunitz; Barbara	
	A180	2008/0308369	12-18-2008	Louis; Robert D.	
	A181	2009/0026901	01-29-2009	Nies, III et al.	
	A182	2009/0071990	03-19-2009	Jardine et al.	
	A183	2009/0127146	05-21-2009	Krebs; Kolja	
	A184	2009/0145790	06-11-2009	Panosian; Michael Harmik	
	A185	2009/0145866	06-11-2009	Panosian et al.	
	A186	2009/0145913	06-11-2009	Panosian et al.	
	A187	2009/0178946	07-16-2009	Patstone et al.	
	A188	2009/0236482	09-24-2009	SS3 Storage Systems LLC	
	A189	2010/0052276	03-04-2010	Brunner	

Examiner Signature	/GIDEON R WEINERTH/	Date Considered	02/12/2022

*EXAMINER: Initial if reference considered, whether or not citation is in conformance with MPEP 609. Draw line through citation if not in conformance and not considered. Include copy of this form with next communication to applicant. 1 Applicant's unique citation designation number (optional). 2 See Kinds Codes of USPTO Patent Documents at www.uspto.gov or MPEP 901.04. 3 Enter Office that issued the document, by the two-letter code (WIPO Standard ST.3). 4 For Japanese patent documents, the indication of the year of the reign of the Emperor must precede the serial number of the patent document. 5 Kind of document by the appropriate symbols as indicated on the document under WIPO Standard ST.16 if possible. 6 Applicant is to place a check mark here if English language Translation is attached.

This collection of information is required by 37 CFR 1.97 and 1.98. The information is required to obtain or retain a benefit by the public which is to file (and by the USPTO to process) an application. Confidentiality is governed by 35 U.S.C. 122 and 37 CFR 1.14. This collection is estimated to take 2 hours to complete, including gathering, preparing, and submitting the completed application form to the USPTO. Time will vary depending upon the individual case. Any comments on the amount of time you require to complete this form and/or suggestions for reducing this burden, should be sent to the Chief Information Officer, U.S. Patent and Trademark Office, P.O. Box 1450, Alexandria, VA 22313-1450. DO NOT SEND FEES OR COMPLETED FORMS TO THIS ADDRESS. **SEND TO: Commissioner for Patents, P.O. Box 1450, Alexandria, VA 22313-1450**.

If you need assistance in completing the form, call 1-800-PTO-9199 (1-800-786-9199) and select option 2.

ALL REFERENCES CONSIDERED EXCEPT WHERE LINED THROUGH. /G.R.W/

Under the Paperwork Reduction Act of 1995, no persons are required to respond to a collection of information unless it contains a valid OMB control number.

Substitute for form 1449/PTO

INFORMATION DISCLOSURE STATEMENT BY APPLICANT

Date Submitted: November 29, 2021

(use as many sheets as necessary)

Sheet 7 of 19

Complete if Known	
Application Number	To be determined
Filing Date	November 29, 2021
First Named Inventor	Yaron Brunner
Art Unit	To be determined
Examiner Name	To be determined
Attorney Docket Number	066749-3309

U.S. PATENT DOCUMENTS

Examiner Initials*	Cite No.[1]	Document Number	Publication Date MM-DD-YYYY	Name of Patentee or Applicant of Cited Document	Pages, Columns, Lines, Where Relevant
	A190	2010/0139566	06-10-2010	Lopuszanski, Michel	
	A191	2010/0147642	06-17-2010	Andochick; Scott E.	
	A192	2010/0176261	07-15-2010	Chen et al.	
	A193	2010/0219193	09-02-2010	Becklin	
	A194	2010/0224528	09-09-2010	Madsen	
	A195	2011/0073516	03-31-2011	Zelinskiy; Konstantin	
	A196	2011/0139665	06-16-2011	Madsen	
	A197	2011/0139777	06-16-2011	Sosnovsky et al.	
	A198	2011/0155613	06-30-2011	Koenig, Andreas et al.	
	A199	2011/017 4939	07-21-2013	Parts Express International Inc.	
	A200	2011/0181008	07-28-2011	BENSMAN;MARK	
	A201	2011/0220531	09-15-2011	Meether et al.	
	A202	2012/0074022	03-29-2012	McTavish et al.	
	A203	2012/0074158	03-29-2012	LAFLEUR; ANDRE	
	A204	2012/0152944	06-21-2012	Vilkomirski et al.	
	A205	2012/0160886	06-28-2012	Henny Paul et al.	
	A206	2012/0180250	07-19-2012	KAERCHER GMBH AND CO ALFRED KG	
	A207	2012/0207571	08-16-2012	Scott, Charles Shay	
	A208	2012/0292213	11-22-2012	Brunner	
	A209	2012/0326406	12-27-2012	LIFSHITZ; Omri	
	A210	2013/0024468	01-24-2013	Kocsis, Susan C.	
	A211	2013/0031731	02-07-2013	KAERCHER GMBH AND CO ALFRED KG	
	A212	2013/0031732	02-07-2013	KAERCHER GMBH AND CO ALFRED KG	
	A213	2013/0068903	03-21-2013	Peerless Ind Inc.	
	A214	2013/0121783	05-16-2013	Kelly; Thomas P.	
	A215	2013/0127129	05-23-2013	Bensman, Mark et al.	
	A216	2013/0154218	06-20-2013	TIILIKAINEN	
	A217	2013/0223971	08-29-2013	Grace IV, Robert W.	

Examiner Signature	/GIDEON R WEINERTH/	Date Considered	02/12/2022

*EXAMINER: Initial if reference considered, whether or not citation is in conformance with MPEP 609. Draw line through citation if not in conformance and not considered. Include copy of this form with next communication to applicant. 1 Applicant's unique citation designation number (optional). 2 See Kinds Codes of USPTO Patent Documents at www.uspto.gov or MPEP 901.04. 3 Enter Office that issued the document, by the two-letter code (WIPO Standard ST.3). 4 For Japanese patent documents, the indication of the year of the reign of the Emperor must precede the serial number of the patent document. 5 Kind of document by the appropriate symbols as indicated on the document under WIPO Standard ST.16 if possible. 6 Applicant is to place a check mark here if English language Translation is attached.

This collection of information is required by 37 CFR 1.97 and 1.98. The information is required to obtain or retain a benefit by the public which is to file (and by the USPTO to process) an application. Confidentiality is governed by 35 U.S.C. 122 and 37 CFR 1.14. This collection is estimated to take 2 hours to complete, including gathering, preparing, and submitting the completed application form to the USPTO. Time will vary depending upon the individual case. Any comments on the amount of time you require to complete this form and/or suggestions for reducing this burden, should be sent to the Chief Information Officer, U.S. Patent and Trademark Office, P.O. Box 1450, Alexandria, VA 22313-1450. DO NOT SEND FEES OR COMPLETED FORMS TO THIS ADDRESS. **SEND TO: Commissioner for Patents, P.O. Box 1450, Alexandria, VA 22313-1450**.

If you need assistance in completing the form, call 1-800-PTO-9199 (1-800-786-9199) and select option 2.

ALL REFERENCES CONSIDERED EXCEPT WHERE LINED THROUGH. /G.R.W/

PTO/SB/08 (09-06)
Approved for use through 03/31/2007. OMB 0651-0031
U.S. Patent and Trademark Office: U.S. DEPARTMENT OF COMMERCE

Under the Paperwork Reduction Act of 1995, no persons are required to respond to a collection of information unless it contains a valid OMB control number.

Substitute for form 1449/PTO

INFORMATION DISCLOSURE STATEMENT BY APPLICANT

Date Submitted: November 29, 2021

(use as many sheets as necessary)

Sheet 8 of 19

Complete if Known	
Application Number	To be determined
Filing Date	November 29, 2021
First Named Inventor	Yaron Brunner
Art Unit	To be determined
Examiner Name	To be determined
Attorney Docket Number	066749-3309

U.S. PATENT DOCUMENTS

Examiner Initials*	Cite No.[1]	Document Number	Publication Date MM-DD-YYYY	Name of Patentee or Applicant of Cited Document	Pages, Columns, Lines, Where Relevant
	A218	2013/146551	06-13-2013	Electrolux Home Prod Inc.	
	A219	2014/0069832	03-13-2014	Roehm	
	A220	2014/0076759	03-20-2014	ROEHM et al.	
	A221	2014/0123478	05-08-2014	Gylander et al.	
	A222	2014/0161518	06-12-2014	KO	
	A223	2014/0166516	06-19-2014	Martinez; Mark R.	
	A224	2015/0014949	01-15-2015	Dittman	
	A225	2015/0034515	02-05-2015	Monyak et al.	
	A226	2015/0151427	06-04-2015	Ben-Gigi	
	A227	2015/0274362	10-01-2015	CHRISTOPHER et al.	
	A228	2015/0310842	10-29-2015	Coburn et al.	
	A229	2015/0376917	12-31-2015	Brunner	
	A230	2016/0023349	01-28-2016	Milwaukee Electric Tool Corporation	
	A231	2016/0130034	05-12-2016	Kuhls; Timo	
	A232	2016/0144500	05-26-2016	CHEN; KUN-CHEN	
	A233	2016/0168880	06-16-2016	Phelan; Matthew	
	A234	2016/0221177	08-04-2016	Reinhart	
	A235	2017/0121056	05-04-2017	Wang; Tzu-Chien	
	A236	2017/0138382	05-18-2017	Ko	
	A237	2017/0165828	06-15-2017	Festool GmbH	
	A238	2017/0166352	06-15-2017	Hoppe; Christopher S.	
	A239	2017/0174392	06-22-2017	De Loynes	
	A240	2017/0217464	08-03-2017	Bar-erez et al.	
	A241	2017/0239808	08-24-2017	Hoppe; Christopher S.	
	A242	2017/0257958	09-07-2017	The Stanley Works Israel Ltd.	
	A243	2017/0266804	09-21-2017	Kinskey	
	A244	2017/0318927	11-09-2017	Krause et al.	
	A245	2017/0349013	12-07-2017	GRONHOLM	
	A246	2018/0044059	02-15-2018	BRUNNER; Varon	

Examiner Signature	/GIDEON R WEINERTH/	Date Considered	02/12/2022

*EXAMINER: Initial if reference considered, whether or not citation is in conformance with MPEP 609. Draw line through citation if not in conformance and not considered. Include copy of this form with next communication to applicant. 1 Applicant's unique citation designation number (optional). 2 See Kinds Codes of USPTO Patent Documents at www.uspto.gov or MPEP 901.04. 3 Enter Office that issued the document, by the two-letter code (WIPO Standard ST.3). 4 For Japanese patent documents, the indication of the year of the reign of the Emperor must precede the serial number of the patent document. 5 Kind of document by the appropriate symbols as indicated on the document under WIPO Standard ST.16 if possible. 6 Applicant is to place a check mark here if English language Translation is attached.

This collection of information is required by 37 CFR 1.97 and 1.98. The information is required to obtain or retain a benefit by the public which is to file (and by the USPTO to process) an application. Confidentiality is governed by 35 U.S.C. 122 and 37 CFR 1.14. This collection is estimated to take 2 hours to complete, including gathering, preparing, and submitting the completed application form to the USPTO. Time will vary depending upon the individual case. Any comments on the amount of time you require to complete this form and/or suggestions for reducing this burden, should be sent to the Chief Information Officer, U.S. Patent and Trademark Office, P.O. Box 1450, Alexandria, VA 22313-1450. DO NOT SEND FEES OR COMPLETED FORMS TO THIS ADDRESS. **SEND TO: Commissioner for Patents, P.O. Box 1450, Alexandria, VA 22313-1450**.

If you need assistance in completing the form, call 1-800-PTO-9199 (1-800-786-9199) and select option 2.

ALL REFERENCES CONSIDERED EXCEPT WHERE LINED THROUGH. /G.R.W/

PTO/SB/08 (09-06)
Approved for use through 03/31/2007. OMB 0651-0031
U.S. Patent and Trademark Office: U.S. DEPARTMENT OF COMMERCE

Under the Paperwork Reduction Act of 1995, no persons are required to respond to a collection of information unless it contains a valid OMB control number.

Substitute for form 1449/PTO

INFORMATION DISCLOSURE STATEMENT BY APPLICANT

Date Submitted: November 29, 2021

(use as many sheets as necessary)

Sheet 9 of 19

Complete if Known	
Application Number	To be determined
Filing Date	November 29, 2021
First Named Inventor	Yaron Brunner
Art Unit	To be determined
Examiner Name	To be determined
Attorney Docket Number	066749-3309

U.S. PATENT DOCUMENTS

Examiner Initials*	Cite No.[1]	Document Number	Publication Date MM-DD-YYYY	Name of Patentee or Applicant of Cited Document	Pages, Columns, Lines, Where Relevant
	A247	2018/0099405	04-12-2018	Reinhart	
	A248	2018/0127007	05-10-2018	Kravchenko	
	A249	2018/0153312	06-07-2018	Buck James et al.	
	A250	2018/0161975	06-14-2018	Brunner; Varon	
	A251	2018/0186513	07-05-2018	Brunner	
	A252	2018/0213934	08-02-2018	Wolle et al.	
	A253	2018/0220758	08-09-2018	Rothenberger AG	
	A254	2018/0229889	08-16-2018	Li	
	A255	2018/0290288	10-11-2018	BRUNNER; Varon	
	A256	2019/0001482	01-03-2019	Wolle et al.	
	A257	2019/0002004	01-03-2019	BRUNNER; Varon	
	A258	2019/0031222	01-31-2019	TAKVAR et al.	
	A259	2019/0039781	02-07-2019	Kogel	
	A260	2019/0106244	04-11-2019	Brunner et al.	
	A261	2019/0168376	06-06-2019	BROCKET; Stephen	
	A262	2019/0225371	07-25-2019	Hoppe et al.	
	A263	2020/0029543	01-30-2020	Householder	
	A264	2020/0055534	02-20-2020	HASSELL	
	A265	2020/0147781	05-14-2020	Squiers et al.	
	A266	2020/0165036	05-28-2020	Squiers et al.	
	A267	2020/0243925	07-30-2020	Polakowski et al.	
	A268	2020/0299027	09-24-2020	Brunner et al.	
	A269	2020/0346819	11-05-2020	Kogel et al.	
	A270	2021/0025706	01-28-2021	Millane	
	A271	2021/0031975	02-04-2021	Brunner at el.	
	A272	2021/0039831	02-11-2021	Brunner at el.	
	A273	2021/0039831	02-11-2021	Brunner et al.	
	A274	2021/0155373	05-27-2021	Cai	
	A275	2021/0187725	06-24-2021	Brunner	
	A276	2021/0267368	09-02-2021	Bruins	
	A277	D232,798	09-17-1974	Roche et al.	
	A278	D285,986	10-07-1986	Huang	

Examiner Signature	/GIDEON R WEINERTH/	Date Considered	02/12/2022

*EXAMINER: Initial if reference considered, whether or not citation is in conformance with MPEP 609. Draw line through citation if not in conformance and not considered. Include copy of this form with next communication to applicant. 1 Applicant's unique citation designation number (optional). 2 See Kinds Codes of USPTO Patent Documents at www.uspto.gov or MPEP 901.04. 3 Enter Office that issued the document, by the two-letter code (WIPO Standard ST.3). 4 For Japanese patent documents, the indication of the year of the reign of the Emperor must precede the serial number of the patent document. 5 Kind of document by the appropriate symbols as indicated on the document under WIPO Standard ST.16 if possible. 6 Applicant is to place a check mark here if English language Translation is attached.

This collection of information is required by 37 CFR 1.97 and 1.98. The information is required to obtain or retain a benefit by the public which is to file (and by the USPTO to process) an application. Confidentiality is governed by 35 U.S.C. 122 and 37 CFR 1.14. This collection is estimated to take 2 hours to complete, including gathering, preparing, and submitting the completed application form to the USPTO. Time will vary depending upon the individual case. Any comments on the amount of time you require to complete this form and/or suggestions for reducing this burden, should be sent to the Chief Information Officer, U.S. Patent and Trademark Office, P.O. Box 1450, Alexandria, VA 22313-1450. DO NOT SEND FEES OR COMPLETED FORMS TO THIS ADDRESS. **SEND TO: Commissioner for Patents, P.O. Box 1450, Alexandria, VA 22313-1450**.

If you need assistance in completing the form, call 1-800-PTO-9199 (1-800-786-9199) and select option 2.

ALL REFERENCES CONSIDERED EXCEPT WHERE LINED THROUGH. /G.R.W/

PTO/SB/08 (09-06)
Approved for use through 03/31/2007. OMB 0651-0031
U.S. Patent and Trademark Office: U.S. DEPARTMENT OF COMMERCE

Under the Paperwork Reduction Act of 1995, no persons are required to respond to a collection of information unless it contains a valid OMB control number.

Substitute for form 1449/PTO

INFORMATION DISCLOSURE STATEMENT BY APPLICANT

Date Submitted: November 29, 2021

(use as many sheets as necessary)

Sheet 10 of 19

Complete if Known	
Application Number	To be determined
Filing Date	November 29, 2021
First Named Inventor	Yaron Brunner
Art Unit	To be determined
Examiner Name	To be determined
Attorney Docket Number	066749-3309

U.S. PATENT DOCUMENTS

Examiner Initials*	Cite No.[1]	Document Number	Publication Date MM-DD-YYYY	Name of Patentee or Applicant of Cited Document	Pages, Columns, Lines, Where Relevant
	A279	D319,016	08-13-1991	Kahl	
	A280	D325,324	04-14-1992	Kahl	
	A281	D326,815	06-09-1992	Meisner et al.	
	A282	D340,167	10-12-1993	Kahl	
	A283	D352,208	11-08-1994	Brookshire	
	A284	D361,511	08-22-1995	Dickinson et al.	
	A285	D395,533	06-23-1998	Morison et al.	
	A286	D415,393	10-19-1999	Kei	
	A287	D420,860	02-22-2000	Golichowski et al.	
	A288	D437,669	02-13-2001	BLASON et al.	
	A289	D456,972	05-07-2002	BLASON et al.	
	A290	D525,789	08-01-2006	Hosking	
	A291	D527,225	08-29-2006	Krieger et al.	
	A292	D536,580	02-13-2007	Krieger et al.	
	A293	D630,851	01-18-2011	Landau et al.	
	A294	D649,350	11-29-2011	Shitrit	
	A295	D653,832	02-07-2012	Vilkomirski et al.	
	A296	D661,858	06-12-2012	Lifshitz et al.	
	A297	D663,952	07-24-2012	CREVLING et al.	
	A298	D664,354	07-31-2012	CREVLING et al.	
	A299	D668,869	10-16-2012	Yamamoto et al.	
	A300	D674,605	01-22-2013	Vilkomirski et al.	
	A301	D701,696	04-01-2014	Shitrit et al.	
	A302	D738,105	09-08-2015	Shitrit	
	A303	D738,106	09-08-2015	Shitrit	
	A304	D738,622	09-15-2015	Sabbag et al.	
	A305	D753,394	04-12-2016	Brunner	
	A306	D753,395	04-12-2016	Brunner	
	A307	D753,396	04-12-2016	Brunner	
	A308	D753,982	04-19-2016	Guirlinger	
	A309	D765,974	09-13-2016	Tonelli et al.	
	A310	D770,179	11-01-2016	Menirom	

Examiner Signature	/GIDEON R WEINERTH/	Date Considered	02/12/2022

*EXAMINER: Initial if reference considered, whether or not citation is in conformance with MPEP 609. Draw line through citation if not in conformance and not considered. Include copy of this form with next communication to applicant. 1 Applicant's unique citation designation number (optional). 2 See Kinds Codes of USPTO Patent Documents at www.uspto.gov or MPEP 901.04. 3 Enter Office that issued the document, by the two-letter code (WIPO Standard ST.3). 4 For Japanese patent documents, the indication of the year of the reign of the Emperor must precede the serial number of the patent document. 5 Kind of document by the appropriate symbols as indicated on the document under WIPO Standard ST.16 if possible. 6 Applicant is to place a check mark here if English language Translation is attached.

This collection of information is required by 37 CFR 1.97 and 1.98. The information is required to obtain or retain a benefit by the public which is to file (and by the USPTO to process) an application. Confidentiality is governed by 35 U.S.C. 122 and 37 CFR 1.14. This collection is estimated to take 2 hours to complete, including gathering, preparing, and submitting the completed application form to the USPTO. Time will vary depending upon the individual case. Any comments on the amount of time you require to complete this form and/or suggestions for reducing this burden, should be sent to the Chief Information Officer, U.S. Patent and Trademark Office, P.O. Box 1450, Alexandria, VA 22313-1450. DO NOT SEND FEES OR COMPLETED FORMS TO THIS ADDRESS. **SEND TO: Commissioner for Patents, P.O. Box 1450, Alexandria, VA 22313-1450**.

If you need assistance in completing the form, call 1-800-PTO-9199 (1-800-786-9199) and select option 2.

ALL REFERENCES CONSIDERED EXCEPT WHERE LINED THROUGH. /G.R.W/

PTO/SB/08 (09-06)
Approved for use through 03/31/2007. OMB 0651-0031
U.S. Patent and Trademark Office: U.S. DEPARTMENT OF COMMERCE

Under the Paperwork Reduction Act of 1995, no persons are required to respond to a collection of information unless it contains a valid OMB control number.

Substitute for form 1449/PTO

INFORMATION DISCLOSURE STATEMENT BY APPLICANT

Date Submitted: November 29, 2021

(use as many sheets as necessary)

Sheet 11 of 19

Complete if Known	
Application Number	To be determined
Filing Date	November 29, 2021
First Named Inventor	Yaron Brunner
Art Unit	To be determined
Examiner Name	To be determined
Attorney Docket Number	066749-3309

U.S. PATENT DOCUMENTS

Examiner Initials*	Cite No.[1]	Document Number	Publication Date MM-DD-YYYY	Name of Patentee or Applicant of Cited Document	Pages, Columns, Lines, Where Relevant
	A311	D777,426	01-31-2017	Dahl	
	A312	D784,089	04-18-2017	Furneaux et al.	
	A313	D790,221	06-27-2017	Yahav et al.	
	A314	D803,631	11-28-2017	Min et al.	
	A315	D806,483	01-02-2018	Stanford et al.	
	A316	D814,187	04-03-2018	Caglar	
	A317	D815,831	04-24-2018	Tonelli	
	A318	D816,334	05-01-2018	Brunner	
	A319	D826,510	08-21-2018	Brunner	
	A320	D828,671	09-11-2018	COPE et al.	
	A321	D831,352	10-23-2018	Brunner	
	A322	D833,744	11-20-2018	Yahav et al.	
	A323	D836,995	01-01-2019	Carey et al.	
	A324	D837,515	04-08-2019	Shpitzer	
	A325	D839,681	02-05-2019	Evron et al.	
	A326	D845,080	04-09-2019	Jacobsen	
	A327	D845,081	04-08-2019	Jacobsen	
	A328	D857,387	08-27-2019	Shpitzer	
	A329	D871,013	12-24-2019	LIU	
	A330	D873,085	01-21-2020	DeFrancia	
	A331	D880,252	04-07-2020	Jacobsen	
	A332	D880,951	04-14-2020	Jacobsen	
	A333	D883,752	05-12-2020	Carey et al.	
	A334	D887,788	06-23-2020	Meda et al.	
	A335	D888,422	06-30-2020	Yang	
	A336	D888,503	06-30-2020	Meda et al.	
	A337	D891,193	06-28-2020	Stanford et al.	
	A338	D891,195	07-28-2020	Zhou	
	A339	D891,875	08-04-2020	Olson	
	A340	D892,565	08-11-2020	Astle et al.	
	A341	D895,375	09-08-2020	Hurley, Jr.	
	A342	D895,966	09-15-2020	Brunner et al.	

Examiner Signature	/GIDEON R WEINERTH/	Date Considered	02/12/2022

*EXAMINER: Initial if reference considered, whether or not citation is in conformance with MPEP 609. Draw line through citation if not in conformance and not considered. Include copy of this form with next communication to applicant. 1 Applicant's unique citation designation number (optional). 2 See Kinds Codes of USPTO Patent Documents at www.uspto.gov or MPEP 901.04. 3 Enter Office that issued the document, by the two-letter code (WIPO Standard ST.3). 4 For Japanese patent documents, the indication of the year of the reign of the Emperor must precede the serial number of the patent document. 5 Kind of document by the appropriate symbols as indicated on the document under WIPO Standard ST.16 if possible. 6 Applicant is to place a check mark here if English language Translation is attached.

This collection of information is required by 37 CFR 1.97 and 1.98. The information is required to obtain or retain a benefit by the public which is to file (and by the USPTO to process) an application. Confidentiality is governed by 35 U.S.C. 122 and 37 CFR 1.14. This collection is estimated to take 2 hours to complete, including gathering, preparing, and submitting the completed application form to the USPTO. Time will vary depending upon the individual case. Any comments on the amount of time you require to complete this form and/or suggestions for reducing this burden, should be sent to the Chief Information Officer, U.S. Patent and Trademark Office, P.O. Box 1450, Alexandria, VA 22313-1450. DO NOT SEND FEES OR COMPLETED FORMS TO THIS ADDRESS. **SEND TO: Commissioner for Patents, P.O. Box 1450, Alexandria, VA 22313-1450**.

If you need assistance in completing the form, call 1-800-PTO-9199 (1-800-786-9199) and select option 2.

ALL REFERENCES CONSIDERED EXCEPT WHERE LINED THROUGH. /G.R.W/

PTO/SB/08 (09-06)
Approved for use through 03/31/2007. OMB 0651-0031
U.S. Patent and Trademark Office: U.S. DEPARTMENT OF COMMERCE

Under the Paperwork Reduction Act of 1995, no persons are required to respond to a collection of information unless it contains a valid OMB control number.

Substitute for form 1449/PTO

INFORMATION DISCLOSURE STATEMENT BY APPLICANT

Date Submitted: November 29, 2021

(use as many sheets as necessary)

Sheet 12 of 19

Complete if Known	
Application Number	To be determined
Filing Date	November 29, 2021
First Named Inventor	Yaron Brunner
Art Unit	To be determined
Examiner Name	To be determined
Attorney Docket Number	066749-3309

U.S. PATENT DOCUMENTS

Examiner Initials*	Cite No.[1]	Document Number	Publication Date MM-DD-YYYY	Name of Patentee or Applicant of Cited Document	Pages, Columns, Lines, Where Relevant
	A343	D895,967	09-15-2020	Brunner et al.	
	A344	D896,517	09-22-2020	Brunner et al.	
	A345	D896,518	09-22-2020	Brunner et al.	
	A346	D898,320	10-06-2020	Brunner et al.	
	A347	D917,977	05-04-2021	Brunner et al.	
	A348	D923,935	07-06-2021	Brunner et al.	

UNPUBLISHED U.S. PATENT APPLICATION DOCUMENTS

Examiner Initials*	Cite No.[1]	U.S. Patent Application Document Serial Number-Kind Code[2] (*if known*)	Filing Date of Cited Document MM-DD-YYYY	Name of Patentee or Applicant of Cited Document	Pages, Columns, Lines, Where Relevant Passages or Relevant Figures Appear

FOREIGN PATENT DOCUMENTS

Examiner Initials*	Cite No.[1]	Foreign Patent Document Country Code[3]-Number[4]-Kind Code[5] (*if known*)	Publication Date MM-DD-YYYY	Name of Patentee or Applicant of Cited Documents	Pages, Columns, Lines, Where Relevant Passages or Relevant Figures Appear	T[6]
	A349	CN101068661	11-07-2007	BOSCH GMBH ROBERT		
	A350	CN102137795	07-27-2011	TTS ToolTechnic Systems AG		
	A351	CN102248523	11-23-2011	CHANGHONG HAN et al.		
	A352	CN102469899	05-23-2012	KAERCHER GMBH AND CO KG ALFRED		
	A353	CN102608238	07-25-2012	Zhengzhou Tobacco Res Cntc		
	A354	CN102834035	12-19-2012	KAERCHER GMBH AND CO ALFRED KG		
	A355	CN103118578	05-22-2013	KAERCHER GMBH AND CO ALFRED KG		
	A356	CN103659777	03-26-2014	Bosch GMBH Robert		
	A357	CN200947356	09-12-2007	FU GANG		
	A358	CN204161752	02-18-2015	Meridian International Co LTD		
	A359	CN2608238	03-31-2004	BAO JIANGANG		
	A360	CN302371147	03-27-2013	吉田攻一郎		

Examiner Signature	/GIDEON R WEINERTH/	Date Considered	02/12/2022

*EXAMINER: Initial if reference considered, whether or not citation is in conformance with MPEP 609. Draw line through citation if not in conformance and not considered. Include copy of this form with next communication to applicant. 1 Applicant's unique citation designation number (optional). 2 See Kinds Codes of USPTO Patent Documents at www.uspto.gov or MPEP 901.04. 3 Enter Office that issued the document, by the two-letter code (WIPO Standard ST.3). 4 For Japanese patent documents, the indication of the year of the reign of the Emperor must precede the serial number of the patent document. 5 Kind of document by the appropriate symbols as indicated on the document under WIPO Standard ST.16 if possible. 6 Applicant is to place a check mark here if English language Translation is attached.

This collection of information is required by 37 CFR 1.97 and 1.98. The information is required to obtain or retain a benefit by the public which is to file (and by the USPTO to process) an application. Confidentiality is governed by 35 U.S.C. 122 and 37 CFR 1.14. This collection is estimated to take 2 hours to complete, including gathering, preparing, and submitting the completed application form to the USPTO. Time will vary depending upon the individual case. Any comments on the amount of time you require to complete this form and/or suggestions for reducing this burden, should be sent to the Chief Information Officer, U.S. Patent and Trademark Office, P.O. Box 1450, Alexandria, VA 22313-1450. DO NOT SEND FEES OR COMPLETED FORMS TO THIS ADDRESS. **SEND TO: Commissioner for Patents, P.O. Box 1450, Alexandria, VA 22313-1450**.

If you need assistance in completing the form, call 1-800-PTO-9199 (1-800-786-9199) and select option 2.

ALL REFERENCES CONSIDERED EXCEPT WHERE LINED THROUGH. /G.R.W/

Under the Paperwork Reduction Act of 1995, no persons are required to respond to a collection of information unless it contains a valid OMB control number.

Substitute for form 1449/PTO

INFORMATION DISCLOSURE STATEMENT BY APPLICANT

Date Submitted: November 29, 2021

(use as many sheets as necessary)

Sheet 13 of 19

Complete if Known	
Application Number	To be determined
Filing Date	November 29, 2021
First Named Inventor	Yaron Brunner
Art Unit	To be determined
Examiner Name	To be determined
Attorney Docket Number	066749-3309

FOREIGN PATENT DOCUMENTS

Examiner Initials*	Cite No.[1]	Foreign Patent Document Country Code[3]-Number[4]-Kind Code[5] (*if known*)	Publication Date MM-DD-YYYY	Name of Patentee or Applicant of Cited Documents	Pages, Columns, Lines, Where Relevant Passages or Relevant Figures Appear	T[6]
	A361	DE102004057870	06-01-2006	BOSCH GMBH ROBERT		
	A362	DE102010003754	10-13-2011	KAERCHER GMBH AND CO ALFRED KG		
	A363	DE102010003756	10-13-2011	KAERCHER GMBH AND CO ALFRED KG		
	A364	DE102012106482	01-23-2014	WAIGEL JOACHIM		
	A365	DE102012220837	05-15-2014	BOSCH GMBH ROBERT		
	A366	DE102015013053	04-13-2017	BURCHIA ROLF		
	A367	DE102015112204	02-16-2017	PERL MICHAEL		
	A368	DE19750543	05-20-1999	FESTO TOOLTECHNIC GMBH AND CO		
	A369	DE202011002617	04-28-2011	Bekuplast Kunststoffverarbeitungs-GmbH		
	A370	DE202014103695	10-30-2014	Metabowerke Gmbh		
	A371	DE202015005752	11-21-2016	PLASTON AG		
	A372	DE202015105053	10-31-2016	AUER PACKAGING GMBH		
	A373	DE20218996	03-06-2003	TTS TOOLTECHNIC SYSTEMS AG		
	A374	DE29708343	07-03-1997	FLIESEN RICHTER GMBH		
	A375	DE3510307	09-25-1986	SPIELHOFF HANS-PETER		
	A376	DE402018201520	05-11-2018	Dirk SCHLENZKA		
	A377	DE4415638	11-09-1995	Halm		
	A378	DE9313802	12-02-1993	TUNG I ENTERPRISE CO		
	A379	EM000705231-0001	04-12-2007	Terry Store-Age S.P.A.		
	A380	EM002419283-0001	03-06-2014	Keter Plastic Ltd.		
	A381	EP0916302	05-19-1999	FESTO TOOLTECHNIC GMBH AND CO		
	A382	EP1321247	06-25-2003	VALENTINI GUIDO		
	A383	EP1428764	06-16-2004	DUBOIS JEAN-MARC et al.		
	A384	EP1819487	08-22-2007	BOSCH GMBH ROBERT		
	A385	EP2289671	03-02-2011	Stanley Works Israel		
	A386	EP2346741	07-27-2011	MADSEN JENS OLE		

Examiner Signature	/GIDEON R WEINERTH/	Date Considered	02/12/2022

*EXAMINER: Initial if reference considered, whether or not citation is in conformance with MPEP 609. Draw line through citation if not in conformance and not considered. Include copy of this form with next communication to applicant. 1 Applicant's unique citation designation number (optional). 2 See Kinds Codes of USPTO Patent Documents at www.uspto.gov or MPEP 901.04. 3 Enter Office that issued the document, by the two-letter code (WIPO Standard ST.3). 4 For Japanese patent documents, the indication of the year of the reign of the Emperor must precede the serial number of the patent document. 5 Kind of document by the appropriate symbols as indicated on the document under WIPO Standard ST.16 if possible. 6 Applicant is to place a check mark here if English language Translation is attached.

This collection of information is required by 37 CFR 1.97 and 1.98. The information is required to obtain or retain a benefit by the public which is to file (and by the USPTO to process) an application. Confidentiality is governed by 35 U.S.C. 122 and 37 CFR 1.14. This collection is estimated to take 2 hours to complete, including gathering, preparing, and submitting the completed application form to the USPTO. Time will vary depending upon the individual case. Any comments on the amount of time you require to complete this form and/or suggestions for reducing this burden, should be sent to the Chief Information Officer, U.S. Patent and Trademark Office, P.O. Box 1450, Alexandria, VA 22313-1450. DO NOT SEND FEES OR COMPLETED FORMS TO THIS ADDRESS. **SEND TO: Commissioner for Patents, P.O. Box 1450, Alexandria, VA 22313-1450**.

If you need assistance in completing the form, call 1-800-PTO-9199 (1-800-786-9199) and select option 2.

ALL REFERENCES CONSIDERED EXCEPT WHERE LINED THROUGH. /G.R.W/

Under the Paperwork Reduction Act of 1995, no persons are required to respond to a collection of information unless it contains a valid OMB control number.

Substitute for form 1449/PTO

INFORMATION DISCLOSURE STATEMENT BY APPLICANT

Date Submitted: November 29, 2021

(use as many sheets as necessary)

Sheet	14	of	19

Complete if Known	
Application Number	To be determined
Filing Date	November 29, 2021
First Named Inventor	Yaron Brunner
Art Unit	To be determined
Examiner Name	To be determined
Attorney Docket Number	066749-3309

FOREIGN PATENT DOCUMENTS

Examiner Initials*	Cite No.[1]	Foreign Patent Document Country Code[3]-Number[4]-Kind Code[5] (*if known*)	Publication Date MM-DD-YYYY	Name of Patentee or Applicant of Cited Documents	Pages, Columns, Lines, Where Relevant Passages or Relevant Figures Appear	T[6]
	A387	EP2456341	05-30-2012	KAERCHER GMBH AND CO ALFRED KG		
	A388	EP2555660	02-13-2013	KAERCHER GMBH AND CO ALFRED KG		
	A389	EP2555661	02-13-2013	KAERCHER GMBH AND CO ALFRED KG		
	A390	EP2805799	11-23-2016	FLEISCHMANN BERND et al.		
	A391	EP3141354	03-15-2017	KOCH SIMON et al.		
	A392	GB2047181B	02-02-1983	REUNIS SA ATELIERS		
	A393	GB2110076	06-15-1983	Ostling Bernt et al.		
	A394	GB2330521	04-28-1999	SPOONER PAUL		
	A395	GB2406331	03-30-2005	JEFFRIES JULIAN CLIFFORD		
	A396	GB2413265	10-26-2005	THOMSON BRIAN		
	A397	GB2449934	12-10-2008	Protrend Co Ltd.		
	A398	GB694707	07-22-1953	GEORGE ARTHUR CHARD		
	A399	JP D1180963	08-04-2003	Name not in English		
	A400	JP D1455321	11-12-2012	Name not in English		
	A401	JP D1625407	02-25-2019	Name not in English		
	A402	JP1276744	07-18-2006	Hirofumi Kishimoto		
	A403	JP1477050	08-19-2013	Ryosuke Omachi		
	A404	JP2003194020A	07-09-2003	SUGIMURA ATSUAKI		
	A405	JP2013022972	02-04-2013	IZUMI DOI, HIDEKI NOMA, MASAYUKI NAKANISHI		
	A406	JP2013022976	02-04-2013	DAIFUKU KK		
	A407	JPD1395115	08-16-2010	Toyoharu Senda		
	A408	JPD1395116	08-16-2010	Toyoharu Senda		
	A409	JPD1503434	07-28-2014	Name not in English		
	A410	JPD1665028	08-03-2020	Keter Plastic LTD et al.		
	A411	KR 3008066040000	07-22-2015	Woojubon Co. LTD		
	A412	KR 3008496000000	04-15-2016	Hwang, Hyung Keun		
	A413	KR30-0271616	02-09-2000	Joong Chui Ahm		

Examiner Signature	/GIDEON R WEINERTH/	Date Considered	02/12/2022

*EXAMINER: Initial if reference considered, whether or not citation is in conformance with MPEP 609. Draw line through citation if not in conformance and not considered. Include copy of this form with next communication to applicant. 1 Applicant's unique citation designation number (optional). 2 See Kinds Codes of USPTO Patent Documents at www.uspto.gov or MPEP 901.04. 3 Enter Office that issued the document, by the two-letter code (WIPO Standard ST.3). 4 For Japanese patent documents, the indication of the year of the reign of the Emperor must precede the serial number of the patent document. 5 Kind of document by the appropriate symbols as indicated on the document under WIPO Standard ST.16 if possible. 6 Applicant is to place a check mark here if English language Translation is attached.

This collection of information is required by 37 CFR 1.97 and 1.98. The information is required to obtain or retain a benefit by the public which is to file (and by the USPTO to process) an application. Confidentiality is governed by 35 U.S.C. 122 and 37 CFR 1.14. This collection is estimated to take 2 hours to complete, including gathering, preparing, and submitting the completed application form to the USPTO. Time will vary depending upon the individual case. Any comments on the amount of time you require to complete this form and/or suggestions for reducing this burden, should be sent to the Chief Information Officer, U.S. Patent and Trademark Office, P.O. Box 1450, Alexandria, VA 22313-1450. DO NOT SEND FEES OR COMPLETED FORMS TO THIS ADDRESS. **SEND TO: Commissioner for Patents, P.O. Box 1450, Alexandria, VA 22313-1450**.

If you need assistance in completing the form, call 1-800-PTO-9199 (1-800-786-9199) and select option 2.

ALL REFERENCES CONSIDERED EXCEPT WHERE LINED THROUGH. /G.R.W/

PTO/SB/08 (09-06)
Approved for use through 03/31/2007. OMB 0651-0031
U.S. Patent and Trademark Office: U.S. DEPARTMENT OF COMMERCE

Under the Paperwork Reduction Act of 1995, no persons are required to respond to a collection of information unless it contains a valid OMB control number.

Substitute for form 1449/PTO

INFORMATION DISCLOSURE STATEMENT BY APPLICANT

Date Submitted: November 29, 2021

(use as many sheets as necessary)

Sheet	15	of	19

Complete if Known	
Application Number	To be determined
Filing Date	November 29, 2021
First Named Inventor	Yaron Brunner
Art Unit	To be determined
Examiner Name	To be determined
Attorney Docket Number	066749-3309

FOREIGN PATENT DOCUMENTS

Examiner Initials*	Cite No.[1]	Foreign Patent Document Country Code[3]-Number[4]-Kind Code[5] (*if known*)	Publication Date MM-DD-YYYY	Name of Patentee or Applicant of Cited Documents	Pages, Columns, Lines, Where Relevant Passages or Relevant Figures Appear	T[6]
	A414	KR30-0320243	06-10-2002	Joung Gu Kang		
	A415	KR3008422360000	03-02-2016	NPC Co., Ltd. HYUNDAI GLOVIS Co., Ltd.		
	A416	KR3008599650000	06-22-2016	NPC Co., Ltd.		
	A417	KR3008812960000	11-15-2016	NPC Co., Ltd.		
	A418	KR3009995990000	03-27-2019	Korea Container Pool Co, Ltd.		
	A419	TW 206875	05-21-1993	Name not in English		
	A420	TW D192092	08-11-2018	Name not in English		
	A421	TW135074	06-01-2010	Yi Hua Wu		
	A422	TW168686	07-01-2015	Kang Delun Business Co., Ltd.		
	A423	TW174412	03-21-2016	Lee Hsin Chang		
	A424	TWl324578	05-11-2010	NAIDU VISHNU et al.		
	A425	WO07121745	11-01-2007	MADSEN JENS OLE		
	A426	WO07121746	11-01-2007	MADSEN JENS OLE		
	A427	WO09140965	11-26-2009	MADSEN JENS OLE		
	A428	WO11009480	01-27-2011	RICKLEFSEN DIRK et al.		
	A429	WO13026084	02-28-2013	VAN DER LINDE et al.		
	A430	WO14125488	08-21-2014	BRUNNER VARON		
	A431	WO17212840	12-14-2017	FURUTA YOSHIHISA		
	A432	WO2005/045886	05-19-2005	Brooks Automation, Inc.		
	A433	WO2007/121746	11-01-2007	J.O. MADSEN APS; MADSEN JENS OLE		
	A434	WO2007121745Al	11-01-2007	MADSEN JENS OLE		
	A435	WO2009/140965	11-26-2009	J.O. MADSEN APS; MADSEN JENS OLE		
	A436	WO2011/009480	01-27-2011	HENSEL MAIC; HESS STEFAN; KAERCHER GMBH &CO KG		
	A437	WO2013/026084	02-28-2013	CONNOR PAUL FRANCIS; DEMAIN TECHNOLOGY PTY LTD.		
	A438	WO2014/125488	08-21-2014	KETER PLASTIC LTD		

Examiner Signature	/GIDEON R WEINERTH/	Date Considered	02/12/2022

*EXAMINER: Initial if reference considered, whether or not citation is in conformance with MPEP 609. Draw line through citation if not in conformance and not considered. Include copy of this form with next communication to applicant. 1 Applicant's unique citation designation number (optional). 2 See Kinds Codes of USPTO Patent Documents at www.uspto.gov or MPEP 901.04. 3 Enter Office that issued the document, by the two-letter code (WIPO Standard ST.3). 4 For Japanese patent documents, the indication of the year of the reign of the Emperor must precede the serial number of the patent document. 5 Kind of document by the appropriate symbols as indicated on the document under WIPO Standard ST.16 if possible. 6 Applicant is to place a check mark here if English language Translation is attached.

This collection of information is required by 37 CFR 1.97 and 1.98. The information is required to obtain or retain a benefit by the public which is to file (and by the USPTO to process) an application. Confidentiality is governed by 35 U.S.C. 122 and 37 CFR 1.14. This collection is estimated to take 2 hours to complete, including gathering, preparing, and submitting the completed application form to the USPTO. Time will vary depending upon the individual case. Any comments on the amount of time you require to complete this form and/or suggestions for reducing this burden, should be sent to the Chief Information Officer, U.S. Patent and Trademark Office, P.O. Box 1450, Alexandria, VA 22313-1450. DO NOT SEND FEES OR COMPLETED FORMS TO THIS ADDRESS. **SEND TO: Commissioner for Patents, P.O. Box 1450, Alexandria, VA 22313-1450**.

If you need assistance in completing the form, call 1-800-PTO-9199 (1-800-786-9199) and select option 2.

ALL REFERENCES CONSIDERED EXCEPT WHERE LINED THROUGH. /G.R.W/

PTO/SB/08 (09-06)
Approved for use through 03/31/2007. OMB 0651-0031
U.S. Patent and Trademark Office: U.S. DEPARTMENT OF COMMERCE

Under the Paperwork Reduction Act of 1995, no persons are required to respond to a collection of information unless it contains a valid OMB control number.

Substitute for form 1449/PTO

INFORMATION DISCLOSURE STATEMENT BY APPLICANT

Date Submitted: November 29, 2021

(use as many sheets as necessary)

Sheet	16	of	19

Complete if Known	
Application Number	To be determined
Filing Date	November 29, 2021
First Named Inventor	Yaron Brunner
Art Unit	To be determined
Examiner Name	To be determined
Attorney Docket Number	066749-3309

FOREIGN PATENT DOCUMENTS

Examiner Initials*	Cite No.[1]	Foreign Patent Document Country Code[3]-Number[4]-Kind Code[5] (*if known*)	Publication Date MM-DD-YYYY	Name of Patentee or Applicant of Cited Documents	Pages, Columns, Lines, Where Relevant Passages or Relevant Figures Appear	T[6]
	A439	WO2016142935	09-15-2016	BRUNNER, Varon et al.		
	A440	WO2017/212840	12-14-2017	GENESIS CO., LTD.		
	A441	WO2017191628	11-09-2017	BRUNNER VARON		
	A442	WO2017O28845	02-23-2017	ROTHENBERGER AG		
	A443	WO2017O28845	02-23-2017	ROTHENBERGER AG		

NON PATENT LITERATURE DOCUMENTS

Examiner Initials*	Cite No.[1]	Include name of the author (in CAPITAL LETTERS), title of the article (when appropriate), title of the item (book, magazine, journal, serial, symposium, catalog, etc.) date, page(s), volume-issue number(s), publisher, city and/or country where published.	T[6]
	A444	"Blitz Box - Portable Storage Box/ Shelf," The Green Head Finds Cool New Stuff, https://www.thegreenhead.com/2013/03/blitz-box-portable-storage-box-shelf.php, Per Wayback, website dates back to February 15, 2015, 5 pages.	
	A445	"BluCave Universal Storage System," BATAVIA Tools to Build, https://batavia.eu/blucave- storage-system/, believed to be available at least as early as November 29, 2017, 5 pages.	
	A446	"Dewalt TSTAK Carrier Trolley," ITS, https://www.its.eo.uk/pd/171229-Dewalt-TSTAK- Carrier-Trolley-_DEW171229.htm, Per Wayback, website dates back to May 2, 2015, 2 pages.	
	A447	"DeWalt TSTAK Vac Rack (Suits DW DWV9O2M & DWV9OOL) DWV95OO-XJ," Get Tools Direct, https://www.gettoolsdirect.eom.au/dewalt-tstak-vac-rack-suits-dwv902m-and- dwv9OO1-dwv95OO-xj.html, believed to be available at least as early as November 29,2017, 4 pages.	
	A448	"Hopkins FloTool 91002 Rhino Box with Mount," Amazon.com, https://www.amazon.com/exec/obidos/ASIN/BOO3K15F31/2O14OOOO-2O, believed to be available at least as early as November 29, 2017, 7 pages.	
	A449	"Tool Skoal, TSTAK Phase 2 Upgrades I TSTAK Carts - First Look - Tool Skoal," YouTube, September 7, 2013, https://www.youtube.com/watch?v=jb06y6J1dr4&feature=youtu.be&t=197, 1 page.	
	A450	Batavia Gmbh, BluCave Storage System, https://protect-us.mimecast.com/s/5XIGCR6KypcgJnlKi9EDoim?domain=batavia.eu, believed to be available at least as early as November 29, 2017, 7 pages.	
	A451	BluCave Video, https://www.youtube.com/watch ?v=Sw7fQQPwo0tY &feature=youtu.be&t=32, believed to be available at least as early as November 29, 2017.	
	A452	Exhibit 1001 in Petition for Inter Partes Review of U.S. Pat. No. 10,583,962, filed January 5, 2021, 64 pages.	

Examiner Signature	/GIDEON R WEINERTH/	Date Considered	02/12/2022

*EXAMINER: Initial if reference considered, whether or not citation is in conformance with MPEP 609. Draw line through citation if not in conformance and not considered. Include copy of this form with next communication to applicant. 1 Applicant's unique citation designation number (optional). 2 See Kinds Codes of USPTO Patent Documents at www.uspto.gov or MPEP 901.04. 3 Enter Office that issued the document, by the two-letter code (WIPO Standard ST.3). 4 For Japanese patent documents, the indication of the year of the reign of the Emperor must precede the serial number of the patent document. 5 Kind of document by the appropriate symbols as indicated on the document under WIPO Standard ST.16 if possible. 6 Applicant is to place a check mark here if English language Translation is attached.

This collection of information is required by 37 CFR 1.97 and 1.98. The information is required to obtain or retain a benefit by the public which is to file (and by the USPTO to process) an application. Confidentiality is governed by 35 U.S.C. 122 and 37 CFR 1.14. This collection is estimated to take 2 hours to complete, including gathering, preparing, and submitting the completed application form to the USPTO. Time will vary depending upon the individual case. Any comments on the amount of time you require to complete this form and/or suggestions for reducing this burden, should be sent to the Chief Information Officer, U.S. Patent and Trademark Office, P.O. Box 1450, Alexandria, VA 22313-1450. DO NOT SEND FEES OR COMPLETED FORMS TO THIS ADDRESS. **SEND TO: Commissioner for Patents, P.O. Box 1450, Alexandria, VA 22313-1450**.

If you need assistance in completing the form, call 1-800-PTO-9199 (1-800-786-9199) and select option 2.

ALL REFERENCES CONSIDERED EXCEPT WHERE LINED THROUGH. /G.R.W/

PTO/SB/08 (09-06)
Approved for use through 03/31/2007. OMB 0651-0031
U.S. Patent and Trademark Office: U.S. DEPARTMENT OF COMMERCE

Under the Paperwork Reduction Act of 1995, no persons are required to respond to a collection of information unless it contains a valid OMB control number.

Substitute for form 1449/PTO

INFORMATION DISCLOSURE STATEMENT BY APPLICANT

Date Submitted: November 29, 2021

(use as many sheets as necessary)

Sheet	17	of	19

Complete if Known	
Application Number	To be determined
Filing Date	November 29, 2021
First Named Inventor	Yaron Brunner
Art Unit	To be determined
Examiner Name	To be determined
Attorney Docket Number	066749-3309

NON PATENT LITERATURE DOCUMENTS

Examiner Initials*	Cite No.[1]	Include name of the author (in CAPITAL LETTERS), title of the article (when appropriate), title of the item (book, magazine, journal, serial, symposium, catalog, etc.) date, page(s), volume-issue number(s), publisher, city and/or country where published.	T[6]
	A453	Exhibit 1002 in Petition for Inter Partes Review of U.S. Pat. No. 10,583,962, filed January 5, 2021, 75 pages.	
	A454	Exhibit 1003 in Petition for Inter Partes Review of U.S. Pat. No. 10,583,962, filed January 5, 2021, 13 pages.	
	A455	Exhibit 1004 in Petition for Inter Partes Review of U.S. Pat. No. 10,583,962, filed January 5, 2021, 18 pages.	
	A456	Exhibit 1005 in Petition for Inter Partes Review of U.S. Pat. No. 10,583,962, filed January 5, 2021, 9 pages.	
	A457	Exhibit 1006 in Petition for Inter Partes Review of U.S. Pat. No. 10,583,962, filed January 5, 2021, 176 pages.	
	A458	Exhibit 1007 in Petition for Inter Partes Review of U.S. Pat. No. 10,583,962, filed January 5, 2021, 22 pages.	
	A459	Exhibit 1008 in Petition for Inter Partes Review of U.S. Pat. No. 10,583,962, filed January 5, 2021, 6 pages.	
	A460	Exhibit 1009 in Petition for Inter Partes Review of U.S. Pat. No. 10,583,962, filed January 5, 2021, 24 pages.	
	A461	Exhibit 1010 in Petition for Inter Partes Review of U.S. Pat. No. 10,583,962, filed January 5, 2021, 19 pages.	
	A462	Exhibit 1011 in Petition for Inter Partes Review of U.S. Pat. No. 10,583,962, filed January 5, 2021, 26 pages.	
	A463	Exhibit 1012 in Petition for Inter Partes Review of U.S. Pat. No. 10,583,962, filed January 5, 2021, 3 pages.	
	A464	Exhibit 1013 in Petition for Inter Partes Review of U.S. Pat. No. 10,583,962, filed January 5, 2021, 168 pages.	
	A465	Exhibit 1014 in Petition for Inter Partes Review of U.S. Pat. No. 10,583,962, filed January 5, 2021, PART A pages 1-166 of 481 pages.	

Examiner Signature	/GIDEON R WEINERTH/	Date Considered	02/12/2022

*EXAMINER: Initial if reference considered, whether or not citation is in conformance with MPEP 609. Draw line through citation if not in conformance and not considered. Include copy of this form with next communication to applicant. 1 Applicant's unique citation designation number (optional). 2 See Kinds Codes of USPTO Patent Documents at www.uspto.gov or MPEP 901.04. 3 Enter Office that issued the document, by the two-letter code (WIPO Standard ST.3). 4 For Japanese patent documents, the indication of the year of the reign of the Emperor must precede the serial number of the patent document. 5 Kind of document by the appropriate symbols as indicated on the document under WIPO Standard ST.16 if possible. 6 Applicant is to place a check mark here if English language Translation is attached.

This collection of information is required by 37 CFR 1.97 and 1.98. The information is required to obtain or retain a benefit by the public which is to file (and by the USPTO to process) an application. Confidentiality is governed by 35 U.S.C. 122 and 37 CFR 1.14. This collection is estimated to take 2 hours to complete, including gathering, preparing, and submitting the completed application form to the USPTO. Time will vary depending upon the individual case. Any comments on the amount of time you require to complete this form and/or suggestions for reducing this burden, should be sent to the Chief Information Officer, U.S. Patent and Trademark Office, P.O. Box 1450, Alexandria, VA 22313-1450. DO NOT SEND FEES OR COMPLETED FORMS TO THIS ADDRESS. **SEND TO: Commissioner for Patents, P.O. Box 1450, Alexandria, VA 22313-1450**.

If you need assistance in completing the form, call 1-800-PTO-9199 (1-800-786-9199) and select option 2.

ALL REFERENCES CONSIDERED EXCEPT WHERE LINED THROUGH. /G.R.W/

PTO/SB/08 (09-06)
Approved for use through 03/31/2007. OMB 0651-0031
U.S. Patent and Trademark Office: U.S. DEPARTMENT OF COMMERCE

Under the Paperwork Reduction Act of 1995, no persons are required to respond to a collection of information unless it contains a valid OMB control number.

Substitute for form 1449/PTO

INFORMATION DISCLOSURE STATEMENT BY APPLICANT

Date Submitted: November 29, 2021

(use as many sheets as necessary)

Sheet 18 of 19

Complete if Known	
Application Number	To be determined
Filing Date	November 29, 2021
First Named Inventor	Yaron Brunner
Art Unit	To be determined
Examiner Name	To be determined
Attorney Docket Number	066749-3309

NON PATENT LITERATURE DOCUMENTS

Examiner Initials*	Cite No.[1]	Include name of the author (in CAPITAL LETTERS), title of the article (when appropriate), title of the item (book, magazine, journal, serial, symposium, catalog, etc.) date, page(s), volume-issue number(s), publisher, city and/or country where published.	T[6]
	A466	Exhibit 1014 in Petition for Inter Partes Review of U.S. Pat. No. 10,583,962, filed January 5, 2021, PART B pages 167-320 of 481 pages.	
	A467	Exhibit 1014 in Petition for Inter Partes Review of U.S. Pat. No. 10,583,962, filed January 5, 2021, PART C pages 321-481 of 481 pages.	
	A468	Exhibit 1015 in Petition for Inter Partes Review of U.S. Pat. No. 10,583,962, filed January 5, 2021, 6 pages.	
	A469	Exhibit 1016 in Petition for Inter Partes Review of U.S. Pat. No. 10,583,962, filed January 5, 2021, 242 pages.	
	A470	Exhibit 1017 in Petition for Inter Partes Review of U.S. Pat. No. 10,583,962, filed January 5, 2021, 6 pages.	
	A471	Exhibit 1018 in Petition for Inter Partes Review of U.S. Pat. No. 10,583,962, filed January 5, 2021, 250 pages.	
	A472	Exhibit 1019 in Petition for Inter Partes Review of U.S. Pat. No. 10,583,962, filed January 5, 2021, 44 pages.	
	A473	Exhibit 1020 in Petition for Inter Partes Review of U.S. Pat. No. 10,583,962, filed January 5, 2021, 5 pages.	
	A474	Exhibit 1021 in Petition for Inter Partes Review of U.S. Pat. No. 10,583,962, filed January 5, 2021, 1 page.	
	A475	Exhibit 1022 in Petition for Inter Partes Review of U.S. Pat. No. 10,583,962, filed January 5, 2021, 1 page.	
	A476	Exhibit 1023 in Petition for Inter Partes Review of U.S. Pat. No. 10,583,962, filed January 5, 2021, 24 pages.	
	A477	Exhibit 1024 in Petition for Inter Partes Review of U.S. Pat. No. 10,583,962, filed January 5, 2021, 28 pages.	
	A478	Inter Partes Review No. 2021-00373, "Petition for Inter Partes Review of U.S. Pat. No. 10,583,962," filed January 5, 2021, 198 pages.	

Examiner Signature	/GIDEON R WEINERTH/	Date Considered	02/12/2022

*EXAMINER: Initial if reference considered, whether or not citation is in conformance with MPEP 609. Draw line through citation if not in conformance and not considered. Include copy of this form with next communication to applicant. 1 Applicant's unique citation designation number (optional). 2 See Kinds Codes of USPTO Patent Documents at www.uspto.gov or MPEP 901.04. 3 Enter Office that issued the document, by the two-letter code (WIPO Standard ST.3). 4 For Japanese patent documents, the indication of the year of the reign of the Emperor must precede the serial number of the patent document. 5 Kind of document by the appropriate symbols as indicated on the document under WIPO Standard ST.16 if possible. 6 Applicant is to place a check mark here if English language Translation is attached.

This collection of information is required by 37 CFR 1.97 and 1.98. The information is required to obtain or retain a benefit by the public which is to file (and by the USPTO to process) an application. Confidentiality is governed by 35 U.S.C. 122 and 37 CFR 1.14. This collection is estimated to take 2 hours to complete, including gathering, preparing, and submitting the completed application form to the USPTO. Time will vary depending upon the individual case. Any comments on the amount of time you require to complete this form and/or suggestions for reducing this burden, should be sent to the Chief Information Officer, U.S. Patent and Trademark Office, P.O. Box 1450, Alexandria, VA 22313-1450. DO NOT SEND FEES OR COMPLETED FORMS TO THIS ADDRESS. **SEND TO: Commissioner for Patents, P.O. Box 1450, Alexandria, VA 22313-1450**.

If you need assistance in completing the form, call 1-800-PTO-9199 (1-800-786-9199) and select option 2.

ALL REFERENCES CONSIDERED EXCEPT WHERE LINED THROUGH. /G.R.W/

PTO/SB/08 (09-06)
Approved for use through 03/31/2007. OMB 0651-0031
U.S. Patent and Trademark Office: U.S. DEPARTMENT OF COMMERCE

Under the Paperwork Reduction Act of 1995, no persons are required to respond to a collection of information unless it contains a valid OMB control number.

Substitute for form 1449/PTO

INFORMATION DISCLOSURE STATEMENT BY APPLICANT

Date Submitted: November 29, 2021

(use as many sheets as necessary)

Sheet 19 of 19

Complete if Known	
Application Number	To be determined
Filing Date	November 29, 2021
First Named Inventor	Yaron Brunner
Art Unit	To be determined
Examiner Name	To be determined
Attorney Docket Number	066749-3309

NON PATENT LITERATURE DOCUMENTS

Examiner Initials*	Cite No.[1]	Include name of the author (in CAPITAL LETTERS), title of the article (when appropriate), title of the item (book, magazine, journal, serial, symposium, catalog, etc.) date, page(s), volume-issue number(s), publisher, city and/or country where published.	T[6]
	A479	International Search Report and Written Opinion for International Application No. PCT/IL2019/050689, dated August 23, 2019, 21 pages.	
	A480	International Search Report and Written Opinion for International Application No. PCT/IL2020/050433, dated June 21, 2020, 14 pages	
	A481	International Search Report and Written Opinion for International Application No. PCT/US2018/033161, dated August 6, 2018, 14 pages.	
	A482	International Search Report and Written Opinion for International Application No. PCT/US2018/044629, dated January 9, 2019, 22 pages.	
	A483	International Search Report and Written Opinion for International Application No. PCT/US2019/014940, dated July 26, 2019, 7 pages.	
	A484	Non-Final Rejection issued April 12, 2018, in United States Application No. 15/826,201. (16 Pages) (Docket No. J699501JS01 446373-419).	
	A485	Sortimo Logistix, "Mobile Sortimente", brochure, believed to be available at least as early as November 29, 2017, 17 pages.	
	A486	STUART, "Ryobi ToolBlox Tool Cabinet System!," TOOLGUYD, September 18, 2014, https://toolguyd.com/ryobi-toolblox-cabinets/, 23 pages.	
	A487	STUART, "Sys-Cart Base, a Systainer Mounting Platform," TOOLGUYD, July 28, 2014, https://toolguyd.com/systainer-sys-cart-mounting-base/, 11 pages.	
	A488	VERTAK, https://www.alibaba.com/product-detail/Vertak-global-patented-multi-funciton-portable_60217794260.html, believed to be available at least as early as November 29, 2017.	

Examiner Signature	/GIDEON R WEINERTH/	Date Considered	02/12/2022

*EXAMINER: Initial if reference considered, whether or not citation is in conformance with MPEP 609. Draw line through citation if not in conformance and not considered. Include copy of this form with next communication to applicant. 1 Applicant's unique citation designation number (optional). 2 See Kinds Codes of USPTO Patent Documents at www.uspto.gov or MPEP 901.04. 3 Enter Office that issued the document, by the two-letter code (WIPO Standard ST.3). 4 For Japanese patent documents, the indication of the year of the reign of the Emperor must precede the serial number of the patent document. 5 Kind of document by the appropriate symbols as indicated on the document under WIPO Standard ST.16 if possible. 6 Applicant is to place a check mark here if English language Translation is attached.

This collection of information is required by 37 CFR 1.97 and 1.98. The information is required to obtain or retain a benefit by the public which is to file (and by the USPTO to process) an application. Confidentiality is governed by 35 U.S.C. 122 and 37 CFR 1.14. This collection is estimated to take 2 hours to complete, including gathering, preparing, and submitting the completed application form to the USPTO. Time will vary depending upon the individual case. Any comments on the amount of time you require to complete this form and/or suggestions for reducing this burden, should be sent to the Chief Information Officer, U.S. Patent and Trademark Office, P.O. Box 1450, Alexandria, VA 22313-1450. DO NOT SEND FEES OR COMPLETED FORMS TO THIS ADDRESS. **SEND TO: Commissioner for Patents, P.O. Box 1450, Alexandria, VA 22313-1450**.

If you need assistance in completing the form, call 1-800-PTO-9199 (1-800-786-9199) and select option 2.

Bibliographic Data

Application No: 17/536,521

Foreign Priority claimed: ○ Yes ◉ No

35 USC 119 (a-d) conditions met: ☐ Yes ☐ No ☐ Met After Allowance

Verified and Acknowledged: /GIDEON R WEINERTH/ (Examiner's Signature) | Initials

Title: Utility Assembly and Coupling Mechanism

FILING or 371(c) DATE	CLASS	GROUP ART UNIT	ATTORNEY DOCKET NO.
11/29/2021 **RULE**	220	3736	066749-3309

APPLICANTS

Milwaukee Electric Tool Corporation, Brookfield, WI, UNITED STATES

Keter Plastic LTD., Herzelyia, ISRAEL

INVENTORS

Yaron Brunner, Kibbutz Gvat, ISRAEL

Grant T. Squiers, Cudahy, WI, UNITED STATES

Christopher S. Hoppe, Cedarburg, WI, UNITED STATES

Steven W. Hyma, Milwaukee, WI, UNITED STATES

CONTINUING DATA

This application is a CON of 17391904 08/02/2021 PAT 11192690

17391904 is a CON of 17132609 12/23/2020

17132609 is a CON of 17064371 10/06/2020

17064371 is a CON of 16752441 01/24/2020 PAT 11008136

16752441 is a CON of 16216724 12/11/2018 PAT 10583962

16216724 is a CON of 15826232 11/29/2017 PAT 10703534

15826232 is a CON of PCT/IL2017/050481 04/30/2017

PCT/IL2017/050481 has PRO of 62459076 02/15/2017

PCT/IL2017/050481 has PRO of 62330334 05/02/2016

FOREIGN APPLICATIONS

IF REQUIRED, FOREIGN LICENSE GRANTED**

12/08/2021

STATE OR COUNTRY

ISRAEL

ADDRESS

Reinhart (Milwaukee Tool)
ATTN: TRAVIS MCDONNELL, PARALEGAL
1000 NORTH WATER STREET
SUITE 2100
MILWAUKEE, WI 53202
UNITED STATES

FILING FEE RECEIVED

$6,160

EAST Search History

EAST Search History (Prior Art)

Ref #	Hits	Search Query	DBs	Default Operator	Plurals	Time Stamp
L1	63	((("Brunner") near3 ("Yaron"))).INV.	USPAT	OR	ON	2022/02/14 23:55
L2	69	(US-20130127129-$ or US-20120152944-$ or US-20180161975-$ or US-20210316909-$ or US-20210274900-$ or US-20210221561-$ or US-20210155373-$ or US-20210031975-$ or US-20200399026-$ or US-20200260827-$ or US-20200060400-$ or US-20190315515-$ or US-20190225371-$ or US-20160168880-$ or US-20180044059-$ or US-20170362017-$ or US-20170197765-$ or US-20170158216-$ or US-20160309863-$ or US-20140035519-$ or US-20160213115-$ or US-20150274362-$ or US-20150216279-$ or US-20150060316-$ or US-20140305829-$ or US-20140197059-$).did. or (US-20140183075-$ or US-20070273114-$ or US-20070194543-$ or US-20140062042-$ or US-20140013789-$ or US-20090078593-$ or US-20110181008-$ or US-20090288970-$ or US-20030075468-$ or US-20020030425-$).did. or (US-11059631-$ or US-11155382-$ or US-D917977-$ or US-8844950-$ or US-7938412-$ or US-9132543-$ or US-RE47022-$ or US-D918580-$ or US-10829269-$ or US-6082539-$ or US-11230410-$ or US-11008136-$ or US-9725209-$ or US-3891230-$ or US-6761366-$ or US-D437484-$ or US-D941020-$ or US-10583962-$ or US-D936030-$ or US-D932186-$ or US-D923935-$ or US-D920671-$ or US-D919296-$ or US-D918584-$ or US-10962218-$ or US-D898320-$).did. or (US-10793172-$ or US-D897103-$ or US-D896518-$ or US-D896517-$ or US-D895967-$ or US-D895966-$ or US-D876833-$).did.	US-PGPUB; USPAT	OR	ON	2022/02/15 00:19
L19	384	(US-20080280523-$ or US-20070006542-$ or US-20060165482-$ or US-20040149754-$ or US-20210267368-$ or US-20210187725-$ or US-20210155373-$ or US-20210039831-$ or US-20210031975-$ or US-20210025706-$ or US-20200346819-$ or US-20200299027-$ or US-20200243925-$ or US-20200165036-$ or US-20200147781-$ or US-20200055534-$ or US-20200029543-$ or US-20190225371-$ or	US-PGPUB; USPAT; USOCR	OR	ON	2022/02/15 00:20

		US-20190168376-$ or US-20190106244-$ or US-20190039781-$ or US-20190031222-$ or US-20190002004-$ or US-20190001482-$ or US-20180290288-$ or US-20180229889-$).did. or (US-20180220758-$ or US-20180213934-$ or US-20180186513-$ or US-20180161975-$ or US-20180153312-$ or US-20180127007-$ or US-20180099405-$ or US-20180044059-$ or US-20170349013-$ or US-20170318927-$ or US-20170266804-$ or US-20170257958-$ or US-20170239808-$ or US-20170217464-$ or US-20170174392-$ or US-20170166352-$ or US-20170165828-$ or US-20170138382-$ or US-20170121056-$ or US-20160221177-$ or US-20160168880-$ or US-20160144500-$ or US-20160130034-$ or US-20160023349-$ or US-20150376917-$ or US-20150310842-$ or US-20150274362-$).did. or (US-20150151427-$ or US-20150034515-$ or US-20150014949-$ or US-20140166516-$ or US-20140161518-$ or US-20140123478-$ or US-20140076759-$ or US-20140069832-$ or US-20130223971-$ or US-20130154218-$ or US-20130127129-$ or US-20130121783-$ or US-20130068903-$ or US-20130031732-$ or US-20130031731-$ or US-20130024468-$ or US-20120326406-$ or US-20120292213-$ or US-20120207571-$ or US-20120180250-$ or US-20120160886-$ or US-20120152944-$ or US-20120074158-$ or US-20120074022-$ or US-20110220531-$ or US-20110181008-$ or US-20110174939-$).did. or (US-20110155613-$ or US-20110139777-$ or US-20110139665-$ or US-20110073516-$ or US-20100224528-$ or US-20100219193-$ or US-20100176261-$ or US-20100147642-$ or US-20100139566-$ or US-20100052276-$ or US-20090236482-$ or US-20090178946-$ or US-20090145913-$ or US-20090145866-$ or US-20090145790-$ or US-20090127146-$ or US-20090071990-$ or US-20090026901-$ or US-20080308369-$ or US-20080296443-$ or US-20080277221-$ or US-20080271280-$ or US-20080169739-$ or US-20080134607-$ or US-20080121547-$ or US-20080115312-$ or US-20080104921-$).did. or (US-20080060953-$ or US-20070194543-$ or US-20070145700-$ or US-20070090616-$ or US-20070068757-$ or US-20060254946-$ or US-20060186624-$ or US-20060119060-$ or US-20060076261-$ or US-20060038367-$ or US-20060027475-$ or US-20060006770-$ or US-20050242144-$ or US-20050139745-$ or US-20050104308-$				

		or US-20050062244-$ or US-20050015928-$ or US-20040206656-$ or US-20040195793-$ or US-20040103494-$ or US-20030205877-$ or US-20030184034-$ or US-20030146589-$ or US-20030115715-$ or US-20030094393-$ or US-20030094392-$ or US-20020171228-$).did. or (US-20020125072-$ or US-20020000440-$).did. or (US-8894160-$ or US-7350648-$ or US-6371321-$ or US-5454634-$ or US-5154291-$ or US-4660725-$ or US-4564732-$ or US-3851936-$ or US-3552817-$ or US-2386343-$ or US-0280523-$ or US-0165482-$ or US-0149754-$ or US-0006542-$ or US-11059631-$ or US-D923935-$ or US-11008136-$ or US-D917977-$ or US-10981696-$ or US-10962218-$ or US-10933501-$ or US-10829269-$ or US-D898320-$ or US-10793172-$ or US-D896518-$ or US-D896517-$).did. or (US-D895967-$ or US-D895966-$ or US-D895375-$ or US-10758065-$ or US-10750833-$ or US-D892565-$ or US-D891875-$ or US-D891195-$ or US-D891193-$ or US-10703534-$ or US-D888503-$ or US-D888422-$ or US-D887788-$ or US-D883752-$ or US-D880951-$ or US-D880252-$ or US-10603783-$ or US-10583962-$ or US-D873085-$ or US-D871013-$ or US-10434638-$ or US-D857387-$ or US-D845081-$ or US-D845080-$ or US-10222172-$ or US-D839681-$ or US-D837515-$).did. or (US-D836995-$ or US-D833744-$ or US-D831352-$ or US-10106180-$ or US-D828671-$ or US-D826510-$ or US-D816334-$ or US-D815831-$ or US-D814187-$ or US-9888752-$ or US-9872562-$ or US-D806483-$ or US-9850029-$ or US-D803631-$ or US-9725209-$ or US-9701443-$ or US-D790221-$ or US-9643629-$ or US-D784089-$ or US-9616562-$ or US-9566990-$ or US-D777426-$ or US-9551367-$ or US-9511491-$ or US-9506489-$ or US-D770179-$ or US-D765974-$).did. or (US-D753982-$ or US-D753396-$ or US-D753395-$ or US-D753394-$ or US-D738622-$ or US-9132543-$ or US-D738106-$ or US-D738105-$ or US-8985922-$ or US-8979100-$ or US-8925752-$ or US-8875888-$ or US-8851282-$ or US-8813960-$ or US-8714355-$ or US-8689396-$ or US-D701696-$ or US-8677661-$ or US-8640913-$ or US-8602217-$ or US-8567796-				

		$ or US-8505729-$ or US-8459495-$ or US-8454033-$ or US-8448829-$ or US-D674605-$ or US-D668869-$).did. or (US-D664354-$ or US-D663952-$ or US-D661858-$ or US-8191910-$ or US-8177463-$ or US-8132819-$ or US-D653832-$ or US-D649350-$ or US-8028845-$ or US-D630851-$ or US-7841144-$ or US-7837165-$ or US-7780026-$ or US-7779764-$ or US-7690856-$ or US-7658887-$ or US-7503569-$ or US-7367571-$ or US-7263742-$ or US-7219969-$ or US-D536580-$ or US-7172164-$ or US-7152752-$ or US-7147243-$ or US-D527225-$ or US-7090085-$ or US-D525789-$).did. or (US-7077372-$ or US-7066475-$ or US-7044484-$ or US-6983946-$ or US-6948691-$ or US-6945546-$ or US-6889838-$ or US-6641013-$ or US-6637707-$ or US-6619772-$ or US-6601930-$ or US-6547347-$ or US-6431580-$ or US-D456972-$ or US-6371424-$ or US-6371320-$ or US-6367631-$ or US-6347847-$ or US-6305498-$ or US-D437669-$ or US-6176559-$ or US-6109627-$ or US-6098858-$ or US-6085925-$ or US-6082687-$ or US-6082539-$ or US-6050660-$).did. or (US-D420860-$ or US-5988473-$ or US-D415393-$ or US-5957421-$ or US-5951037-$ or US-5890613-$ or US-5850996-$ or US-5797617-$ or US-5775046-$ or US-D395533-$ or US-5664292-$ or US-5653366-$ or US-5628443-$ or US-5622296-$ or US-5608603-$ or US-5595228-$ or US-5538213-$ or US-D361511-$ or US-5433416-$ or US-5429260-$ or US-5429235-$ or US-5375709-$ or US-D352208-$ or US-5356105-$ or US-5356038-$ or US-5325966-$ or US-5301829-$).did. or (US-5282554-$ or US-D340167-$ or US-5240264-$ or US-D326815-$ or US-5105947-$ or US-D325324-$ or US-5098235-$ or US-D319016-$ or US-5035445-$ or US-4971201-$ or US-4929973-$ or US-4817237-$ or US-4805859-$ or US-4673070-$ or US-D285986-$ or US-4243279-$ or US-4168076-$ or US-4122925-$ or US-3999818-$ or US-3974898-$ or US-3935613-$ or US-D232798-$ or US-3743372-$ or US-3514170-$ or US-3506321-$ or US-3424334-$ or US-3423786-$).did. or (US-3225865-$ or US-3117692-$ or US-2970358-$ or US-2939613-$ or US-2430200-$ or US-2124541-$ or US-2042387-$ or US-1084360-$ or US-1081378-$ or US-0509839-$ or US-0495537-$).did. or (US-3552817-$ or US-2386343-$ or US-0280523-$ or US-0165482-$ or US-				

		0149754-$ or US-0006542-$ or US-D232798-$ or US-3514170-$ or US-3506321-$ or US-3424334-$ or US-3423786-$ or US-3225865-$ or US-3117692-$ or US-2970358-$ or US-2939613-$ or US-2430200-$ or US-2124541-$ or US-2042387-$ or US-1084360-$ or US-1081378-$ or US-0509839-$ or US-0495537-$).did.				
L20	42	L2 not L19	US-PGPUB; USPAT; USOCR	OR	ON	2022/02/15 00:20
L21	1	("20130127129").PN.	US-PGPUB; USPAT; USOCR	OR	OFF	2022/02/15 00:22
L22	1	L21 and L19	US-PGPUB; USPAT; USOCR	OR	ON	2022/02/15 00:23
S1	24	(US-0006542-$ | US-0149754-$ | US-0165482-$ | US-0280523-$ | US-2386343-$ | US-20040149754-$ | US-20060165482-$ | US-20070006542-$ | US-20080280523-$ | US-3552817-$ | US-3851936-$ | US-4564732-$ | US-4660725-$ | US-5154291-$ | US-5454634-$ | US-6371321-$ | US-7350648-$ | US-8894160-$).DID.	US-PGPUB; USPAT; USOCR	OR	ON	2022/02/12 22:43
S2	360	(("0495537") or ("0509839") or ("1081378") or ("1084360") or ("2042387") or ("2124541") or ("2430200") or ("2939613") or ("2970358") or ("3117692") or ("3225865") or ("3423786") or ("3424334") or ("3506321") or ("3514170") or ("3743372") or ("3935613") or ("3974898") or ("3999818") or ("4122925") or ("4168076") or ("4243279") or ("4673070") or ("4805859") or ("4817237") or ("4929973") or ("4971201") or ("5035445") or ("5098235") or ("5105947") or ("5240264") or ("5282554") or ("5301829") or ("5325966") or ("5356038") or ("5356105") or ("5375709") or ("5429235") or ("5429260") or ("5433416") or ("5538213") or ("5595228") or ("5608603") or ("5622296") or ("5628443") or ("5653366") or ("5653366") or ("5664292") or ("5775046") or ("5797617") or ("5850996") or ("5890613") or ("5951037") or ("5957421") or ("5988473") or ("6050660") or ("6082539") or ("6082687")	US-PGPUB; USPAT; USOCR	OR	OFF	2022/02/12 22:53

		or ("6085925") or ("6098858") or ("6109627") or ("6176559") or ("6305498") or ("6347847") or ("6367631") or ("6371320") or ("6371424") or ("6431580") or ("6547347") or ("6601930") or ("6619772") or ("6637707") or ("6641013") or ("6889838") or ("6945546") or ("6948691") or ("6983946") or ("7044484") or ("7066475") or ("7077372") or ("7090085") or ("7147243") or ("7152752") or ("7172164") or ("7219969") or ("7263742") or ("7367571") or ("7503569") or ("7658887") or ("7690856") or ("7779764") or ("7780026") or ("7837165") or ("7841144") or ("8028845") or ("8132819") or ("8177463") or ("8191910") or ("8448829") or ("8454033") or ("8459495") or ("8505729") or ("8567796") or ("8602217") or ("8640913") or ("8677661") or ("8689396") or ("8714355") or ("8813960") or ("8851282") or ("8875888") or ("8925752") or ("8979100") or ("8985922") or ("9132543") or ("9506489") or ("9511491") or ("9551367") or ("9566990") or ("9616562") or ("9643629") or ("9701443") or ("9725209") or ("9850029") or ("9872562") or ("9888752") or ("10106180") or ("10222172") or ("10434638") or ("10583962") or ("10603783") or ("10703534") or ("10750833") or ("10758065") or ("10793172") or ("10829269") or ("10933501") or ("10933501") or ("10962218") or ("10981696") or ("11008136") or ("11059631") or ("20020000440") or ("20020125072") or ("20020171228") or ("20030094392") or ("20030094393") or ("20030115715")).PN. or (("20030146589") or ("20030184034") or ("20030205877") or ("20040103494") or ("20040195793") or ("20040206656") or ("20050015928") or ("20050062244") or ("20050104308") or ("20050139745") or ("20050242144") or ("20060006770") or ("20060027475") or ("20060038367") or ("20060076261") or ("20060119060") or ("20060186624") or ("20060254946") or ("20070068757") or ("20070090616") or ("20070145700") or ("20070194543") or ("20080060953") or ("20080104921") or ("20080115312") or ("20080121547") or ("20080134607") or ("20080169739") or ("20080271280") or				

		("20080277221") or ("20080296443") or ("20080308369") or ("20090026901") or ("20090071990") or ("20090127146") or ("20090145790") or ("20090145866") or ("20090145913") or ("20090178946") or ("20090236482") or ("20100052276") or ("20100139566") or ("20100147642") or ("20100176261") or ("20100219193") or ("20100224528") or ("20110073516") or ("20110139665") or ("20110139777") or ("20110155613") or ("20110174939") or ("20110181008") or ("20110220531") or ("20120074022") or ("20120074158") or ("20120152944") or ("20120160886") or ("20120180250") or ("20120207571") or ("20120292213") or ("20120326406") or ("20130024468") or ("20130031731") or ("20130031732") or ("20130068903") or ("20130121783") or ("20130127129") or ("20130154218") or ("20130223971") or ("2013146551") or ("20140069832") or ("20140076759") or ("20140123478") or ("20140161518") or ("20140166516") or ("20150014949") or ("20150034515") or ("20150151427") or ("20150274362") or ("20150310842") or ("20150376917") or ("20160023349") or ("20160130034") or ("20160144500") or ("20160168880") or ("20160221177") or ("20170121056") or ("20170138382") or ("20170165828") or ("20170166352") or ("20170174392") or ("20170217464") or ("20170239808") or ("20170257958") or ("20170266804") or ("20170318927") or ("20170349013") or ("20180044059") or ("20180099405") or ("20180127007") or ("20180153312") or ("20180161975") or ("20180186513") or ("20180213934") or ("20180220758") or ("20180229889") or ("20180290288") or ("20190001482") or ("20190002004") or ("20190031222") or ("20190039781") or ("20190106244") or ("20190168376") or ("20190225371") or ("20200029543") or ("20200055534") or ("20200147781") or ("20200165036") or ("20200243925")).PN. or (("20200299027") or ("20200346819") or ("20210025706") or ("20210031975") or ("20210039831") or ("20210039831") or ("20210155373") or ("20210187725") or ("20210267368") or ("D232798") or ("D285986") or ("D319016") or ("D325324") or ("D326815") or ("D340167") or ("D352208") or ("D361511") or ("D395533")				

		or ("D415393") or ("D420860") or ("D437669") or ("D456972") or ("D525789") or ("D527225") or ("D536580") or ("D630851") or ("D649350") or ("D653832") or ("D661858") or ("D663952") or ("D664354") or ("D668869") or ("D674605") or ("D701696") or ("D738105") or ("D738106") or ("D738622") or ("D753394") or ("D753395") or ("D753396") or ("D753982") or ("D765974") or ("D770179") or ("D777426") or ("D784089") or ("D790221") or ("D803631") or ("D806483") or ("D814187") or ("D815831") or ("D816334") or ("D826510") or ("D828671") or ("D831352") or ("D833744") or ("D836995") or ("D837515") or ("D839681") or ("D845080") or ("D845081") or ("D857387") or ("D871013") or ("D873085") or ("D880252") or ("D880951") or ("D883752") or ("D887788") or ("D888422") or ("D888503") or ("D891193") or ("D891195") or ("D891875") or ("D892565") or ("D895375") or ("D895966") or ("D895967") or ("D896517") or ("D896518") or ("D898320") or ("D917977") or ("D923935")).PN.				
S3	1,461	((("MILWAUKEE") near3 ("ELECTRIC") near3 ("TOOL") near3 ("CORPORATION")) OR (("KETER") near3 ("PLASTIC") near3 ("LTD"))).AS,AANM.	USPAT	OR	ON	2022/02/12 22:59
S4	1,461	((("MILWAUKEE") near3 ("ELECTRIC") near3 ("TOOL") near3 ("CORPORATION")) OR (("KETER") near3 ("PLASTIC") near3 ("LTD"))).AS,AANM.	USPAT	OR	ON	2022/02/12 22:59
S5	101	((("Brunner") near3 ("Yaron"))).INV.	US-PGPUB; USPAT; USOCR	OR	ON	2022/02/12 22:59
S6	90	((("Squiers") near3 ("Grant") near3 ("T"))).INV.	US-PGPUB; USPAT; USOCR	OR	ON	2022/02/12 22:59
S7	124	((("Hoppe") near3 ("Christopher") near3 ("S"))).INV.	US-PGPUB; USPAT; USOCR	OR	ON	2022/02/12 22:59
S8	214	((("Hyma") near3 ("Steven") near3 ("W"))).INV.	US-PGPUB; USPAT; USOCR	OR	ON	2022/02/12 22:59

S9	570	220/4.27.ccls.	US-PGPUB; USPAT; USOCR	OR	ON	2022/02/12 22:59
S10	1,015	B65D21/0223,0209.cpc.	US-PGPUB; USPAT; USOCR	OR	ON	2022/02/12 23:00
S11	2,377	A45C5/14.cpc.	US-PGPUB; USPAT; USOCR	OR	ON	2022/02/12 23:00
S12	111	A45C7/005.cpc.	US-PGPUB; USPAT; USOCR	OR	ON	2022/02/12 23:00
S13	3,619	A45C13/02.cpc.	US-PGPUB; USPAT; USOCR	OR	ON	2022/02/12 23:00
S14	476	A45F3/10.cpc.	US-PGPUB; USPAT; USOCR	OR	ON	2022/02/12 23:00
S15	997	B25H1/04.cpc.	US-PGPUB; USPAT; USOCR	OR	ON	2022/02/12 23:00
S16	1,287	B25H3/02.cpc.	US-PGPUB; USPAT; USOCR	OR	ON	2022/02/12 23:00
S17	224	B25H3/021.cpc.	US-PGPUB; USPAT; USOCR	OR	ON	2022/02/12 23:01
S18	1,197	B62B1/14.cpc.	US-PGPUB; USPAT; USOCR	OR	ON	2022/02/12 23:01
S19	615	B65D21/0209.cpc.	US-PGPUB; USPAT; USOCR	OR	ON	2022/02/12 23:01
S20	248	B65D21/0228.cpc.	US-PGPUB; USPAT; USOCR	OR	ON	2022/02/12 23:01

S21	409	A45C7/0045.cpc.	US-PGPUB; USPAT; USOCR	OR	ON	2022/02/12 23:01
S22	493	B25H3/023.cpc.	US-PGPUB; USPAT; USOCR	OR	ON	2022/02/12 23:01
S23	1,066	B62B5/067.cpc.	US-PGPUB; USPAT; USOCR	OR	ON	2022/02/12 23:01
S24	59	B65D2255/00.cpc.	US-PGPUB; USPAT; USOCR	OR	ON	2022/02/12 23:01
S25	222	B65H2701/533.cpc.	US-PGPUB; USPAT; USOCR	OR	ON	2022/02/12 23:02
S26	5	(("11192690") or ("11027883") or ("11008136") or ("10703534") or ("10981696")).PN.	US-PGPUB; USPAT; USOCR	OR	OFF	2022/02/12 23:07
S27	12,659	S9 S10 S11 S12 S13 S14 S15 S16 S17 S18 S19 S20 S21 S22 S23	US-PGPUB; USPAT; USOCR	OR	ON	2022/02/12 23:40
S28	4,953	S27 and (toggle latch lock)	US-PGPUB; USPAT; USOCR	OR	ON	2022/02/12 23:40
S29	7	("2019/0315515").URPN.	USPAT	OR	ON	2022/02/13 00:24
S30	20	("2019/0225371").URPN.	USPAT	OR	ON	2022/02/13 00:26
S31	25	("20010013358" | "20060237927" | "20070001409" | "20130207360" | "4254850" | "4724681" | "5228706" | "5249438" | "5259215" | "5313817" | "5346245" | "5373708" | "5680932" | "5713468" | "5762411" | "5781853" | "5934425" | "5988658" | "6216488" | "6585090" | "7143601" | "7604290" | "7854321" | "7938412" | "8256156" | "8356712" | "8740010" | "8820522" | "8844950").PN.	USPAT	OR	ON	2022/02/14 21:16

S32	29	("20010013358" | "20060237927" | "20070001409" | "20130207360" | "4254850" | "4724681" | "5228706" | "5249438" | "5259215" | "5313817" | "5346245" | "5373708" | "5680932" | "5713468" | "5762411" | "5781853" | "5934425" | "5988658" | "6216488" | "6585090" | "7143601" | "7604290" | "7854321" | "7938412" | "8256156" | "8356712" | "8740010" | "8820522" | "8844950").PN.	US-PGPUB; USPAT; USOCR	OR	ON	2022/02/14 21:16
S33	76	("1893526" | "1992435" | "20060021985" | "20060124643" | "20070273114" | "2747388" | "3383058" | "3995926" | "4466628" | "4739577" | "4820003" | "4887837" | "5207723" | "5240264" | "5285656" | "5333408" | "5378005" | "5452908" | "5595395" | "5893572" | "5988657" | "6176559" | "6209977" | "6347847" | "6601930" | "6761366" | "6802409" | "6832689" | "6910560" | "6923352" | "7111852" | "7278234" | "7306245" | "7488048" | "D141929" | "D222933" | "D349989" | "D371663" | "D395108" | "D437484" | "D462170").PN. OR ("7938412").URPN.	US-PGPUB; USPAT; USOCR	OR	ON	2022/02/14 21:17
S34	196	("0344661" | "0687619" | "1424819" | "1933894" | "20010052681" | "20020014488" | "20020067027" | "20020074905" | "20020113386" | "20020185831" | "20030001348" | "20030146589" | "20040069668" | "20040265104" | "20050062244" | "20050104308" | "20050161357" | "20050224384" | "20050258610" | "20050275178" | "20060006619" | "20060012139" | "20060037964" | "20060038367" | "20070080512" | "20070103039" | "20070194024" | "20070194543" | "20070273114" | "20080084036" | "20080121547" | "20080128305" | "20080143069" | "20090020528" | "20090026901" | "20090096181" | "20090223853" | "20090236255" | "20090309323" | "20100052276" | "20100290877" | "20100327562" | "20110049824" | "20110181008" | "20120160886" | "20120326406" | "20140001719" | "20140023221" | "20140375181" | "2554091" | "2588830" | "2901262" | "2964328" | "3168329" | "3310905" |	US-PGPUB; USPAT; USOCR	OR	ON	2022/02/14 21:18

		"3327841" | "3393951" | "3734526" | "3804432" | "3891230" | "3990653" | "4169607" | "4202459" | "4363496" | "4448434" | "4619363" | "4836374" | "4884689" | "4927021" | "4936594" | "4984704" | "5022546" | "5104135" | "5123666" | "5207723" | "5325966" | "5333885" | "5362078" | "5378005" | "5464104" | "5474312" | "5595395" | "5626352" | "5634649" | "5699925" | "5720535" | "5799958" | "5803254" | "5845915" | "5882097" | "5887715" | "5906381" | "5913527" | "5915554" | "5931483" | "5934466" | "5938396" | "6000713" | "6015064" | "6050660" | "6079719" | "6082539" | "6105767" | "6109627" | "6113129" | "6123344" | "6131926" | "6135466" | "6176559" | "6254112").PN. OR ("6347847" | "6357063" | "6371320" | "6394471" | "6398235" | "6474930" | "6523687" | "6561528" | "6601930" | "6616152" | "6626295" | "6648166" | "6648390" | "6659476" | "6666465" | "6874634" | "6889838" | "6945546" | "6971517" | "6994214" | "7063339" | "7066475" | "7108131" | "7168715" | "7188846" | "7188847" | "7210689" | "7219969" | "7246704" | "7255229" | "7263742" | "7328905" | "7334680" | "7357268" | "7367571" | "7472730" | "7500681" | "7503569" | "7523827" | "7686260" | "7703776" | "7819407" | "7823893" | "7845653" | "7883096" | "7905353" | "7905502" | "7938412" | "8132819" | "8226092" | "8505729" | "8567796" | "8657307" | "8668209" | "9132543" | "9566990" | "D417338" | "D437484" | "D536525" | "D542496" | "D640869" | "D653832" | "D654241").PN. OR ("RE47022").URPN.				
S35	53	("0491865" | "2750064" | "2792245" | "3811559" | "4619363" | "5011013" | "5145064" | "5385257" | "5603402").PN. OR ("6082539").URPN.	US-PGPUB; USPAT; USOCR	OR	ON	2022/02/14 21:20
S36	2	("2936189").PN.	US-PGPUB; USPAT; USOCR	OR	OFF	2022/02/14 21:34

2/15/2022 12:24:11 AM
C:\Users\gweinerth\Desktop\CURRENT DOCKET\BRUNNER X 17536521\Brunner 10 Workspace.wsp

ALL REFERENCES CONSIDERED EXCEPT WHERE LINED THROUGH. /G.R.W/

Atty. Dkt. No. 066749-3309

IN THE UNITED STATES PATENT AND TRADEMARK OFFICE

Applicant: Milwaukee Electric Tool Corporation et al.

Title: Utility Assembly and Coupling Mechanism

Appl. No.: To Be Determined

Filing Date: November 29, 2021

Examiner: To Be Determined

Art Unit: To Be Determined

Confirmation Number: To Be Determined

INFORMATION DISCLOSURE STATEMENT UNDER 37 CFR §1.56

Mail Stop Amendment
Commissioner for Patents
P.O. Box 1450
Alexandria, VA 22313-1450

Submitted herewith on Form PTO/SB/08 is a listing of the documents cited by or submitted to the United States Patent & Trademark Office ("USPTO") in parent application Serial No. 17/391,904, filed August 2, 2021. As provided in 37 CFR §1.98(d), copies of documents previously cited in the above-identified patent application are not being provided since they were previously submitted to the USPTO in the above-identified patent application or in a prior related application. Otherwise, copies of each newly cited non-U.S. patent document (if any) and each newly cited non-patent document (if any) are being submitted to comply with the provisions of 37 CFR §1.97 and §1.98.

The submission of any document herewith, which is not a statutory bar, is not intended as an admission that such document constitutes prior art against the claims of the present application or that such document is considered material to patentability as defined in 37 CFR §1.56(b). Applicants do not waive any rights to take any action which would be appropriate to

antedate or otherwise remove as a competent reference any document which is determined to be a *prima facie* art reference against the claims of the present application.

TIMING OF THE DISCLOSURE

The listed documents are being submitted in compliance with 37 CFR §1.97(b)(1), within three (3) months of the filing date of the application.

RELEVANCE OF EACH DOCUMENT

The relevance of the foreign-language document is shown in the figures of the foreign-language documents and/or are described in the English-language abstract submitted in the parent application, where available. An English non-machine translation of the foreign-language document is not readily available. However, the absence of such translation does not relieve the PTO from its duty to consider the submitted foreign language document (37 CFR §1.98 and MPEP §609).

Applicants respectfully request that each listed document be considered by the Examiner and be made of record in the present application and that an initialed copy of Form PTO/SB/08 be returned in accordance with MPEP §609.

Although Applicant believes that no fee is required for this Request, the Commissioner is hereby authorized to charge any additional fees which may be required for this Request to Deposit Account No. 18-0882.

Respectfully submitted,

Date November 29, 2021

By /Derek H. Campbell/

Reinhart Boerner Van Deuren s.c.
Customer Number: 142078
Telephone: (414) 298-8374
Facsimile: (414) 298-8097

Derek H. Campbell
Attorney for Applicant
Registration No. 70,608

ALL REFERENCES CONSIDERED EXCEPT WHERE LINED THROUGH. /G.R.W/

Approved for use through 03/31/2007. OMB 0651-0031
U.S. Patent and Trademark Office: U.S. DEPARTMENT OF COMMERCE

Under the Paperwork Reduction Act of 1995, no persons are required to respond to a collection of information unless it contains a valid OMB control number.

Substitute for form 1449/PTO

INFORMATION DISCLOSURE STATEMENT BY APPLICANT

Date Submitted: February 7, 2022

(use as many sheets as necessary)

Sheet 1 of 2

Complete if Known	
Application Number	17/536,521
Filing Date	November 29, 2021
First Named Inventor	Yaron Brunner
Art Unit	3736
Examiner Name	WEINERTH, GIDEON R
Attorney Docket Number	066749-3309

U.S. PATENT DOCUMENTS

Examiner Initials*	Cite No.[1]	Document Number / Number-Kind Code[2] (*if known*)	Publication Date MM-DD-YYYY	Name of Patentee or Applicant of Cited Document	Pages, Columns, Lines, Where Relevant Passages or Relevant Figures Appear
	A1	2,386,343	10-09-1945	Regenhardt	
	A2	3,552,817	01-05-1971	Marcolongo	
	A3	3,567,298	03-02-1971	Ambaum et al.	
	A4	3,851,936	12-03-1974	Muller	
	A5	4,564,732	01-14-1986	Lancaster et al.	
	A6	4,660,725	04-28-1987	Fishman et al.	
	A7	5,154,291	10-13-1992	Sur	
	A8	5,454,634	10-03-1995	Herbst et al.	
	A9	6,371,321	04-16-2002	Lee	
	A10	7,350,648	04-01-2008	Gerstner et al.	
	A11	8,894,160	11-25-2014	Christensen	
	A12	2004/0149754	08-05-2004	Diamant	
	A13	2006/0165482	07-27-2006	Olberding	
	A14	2007/0006542	01-11-2007	Duke	
	A15	2008/0280523	11-13-2008	Bishop	

UNPUBLISHED U.S. PATENT APPLICATION DOCUMENTS

Examiner Initials*	Cite No.[1]	U.S. Patent Application Document / Serial Number-Kind Code[2] (*if known*)	Filing Date of Cited Document MM-DD-YYYY	Name of Patentee or Applicant of Cited Document	Pages, Columns, Lines, Where Relevant Passages or Relevant Figures Appear

FOREIGN PATENT DOCUMENTS

Examiner Initials*	Cite No.[1]	Foreign Patent Document / Country Code[3]-Number[4]-Kind Code[5] (*if known*)	Publication Date MM-DD-YYYY	Name of Patentee or Applicant of Cited Documents	Pages, Columns, Lines, Where Relevant Passages or Relevant Figures Appear	T[6]

NON PATENT LITERATURE DOCUMENTS

Examiner Signature	/GIDEON R WEINERTH/	Date Considered	02/12/2022

*EXAMINER: Initial if reference considered, whether or not citation is in conformance with MPEP 609. Draw line through citation if not in conformance and not considered. Include copy of this form with next communication to applicant. 1 Applicant's unique citation designation number (optional). 2 See Kinds Codes of USPTO Patent Documents at www.uspto.gov or MPEP 901.04. 3 Enter Office that issued the document, by the two-letter code (WIPO Standard ST.3). 4 For Japanese patent documents, the indication of the year of the reign of the Emperor must precede the serial number of the patent document. 5 Kind of document by the appropriate symbols as indicated on the document under WIPO Standard ST.16 if possible. 6 Applicant is to place a check mark here if English language Translation is attached.

This collection of information is required by 37 CFR 1.97 and 1.98. The information is required to obtain or retain a benefit by the public which is to file (and by the USPTO to process) an application. Confidentiality is governed by 35 U.S.C. 122 and 37 CFR 1.14. This collection is estimated to take 2 hours to complete, including gathering, preparing, and submitting the completed application form to the USPTO. Time will vary depending upon the individual case. Any comments on the amount of time you require to complete this form and/or suggestions for reducing this burden, should be sent to the Chief Information Officer, U.S. Patent and Trademark Office, P.O. Box 1450, Alexandria, VA 22313-1450. DO NOT SEND FEES OR COMPLETED FORMS TO THIS ADDRESS. **SEND TO: Commissioner for Patents, P.O. Box 1450, Alexandria, VA 22313-1450**.

If you need assistance in completing the form, call 1-800-PTO-9199 (1-800-786-9199) and select option 2.

Under the Paperwork Reduction Act of 1995, no persons are required to respond to a collection of information unless it contains a valid OMB control number.

Substitute for form 1449/PTO

INFORMATION DISCLOSURE STATEMENT BY APPLICANT

Date Submitted: February 7, 2022

(use as many sheets as necessary)

Sheet 2 of 2

Complete if Known	
Application Number	17/536,521
Filing Date	November 29, 2021
First Named Inventor	Yaron Brunner
Art Unit	3736
Examiner Name	WEINERTH, GIDEON R
Attorney Docket Number	066749-3309

Examiner Initials*	Cite No.[1]	Include name of the author (in CAPITAL LETTERS), title of the article (when appropriate), title of the item (book, magazine, journal, serial, symposium, catalog, etc.) date, page(s), volume-issue number(s), publisher, city and/or country where published.	T[6]

Examiner Signature		Date Considered	

*EXAMINER: Initial if reference considered, whether or not citation is in conformance with MPEP 609. Draw line through citation if not in conformance and not considered. Include copy of this form with next communication to applicant. 1 Applicant's unique citation designation number (optional). 2 See Kinds Codes of USPTO Patent Documents at www.uspto.gov or MPEP 901.04. 3 Enter Office that issued the document, by the two-letter code (WIPO Standard ST.3). 4 For Japanese patent documents, the indication of the year of the reign of the Emperor must precede the serial number of the patent document. 5 Kind of document by the appropriate symbols as indicated on the document under WIPO Standard ST.16 if possible. 6 Applicant is to place a check mark here if English language Translation is attached.

This collection of information is required by 37 CFR 1.97 and 1.98. The information is required to obtain or retain a benefit by the public which is to file (and by the USPTO to process) an application. Confidentiality is governed by 35 U.S.C. 122 and 37 CFR 1.14. This collection is estimated to take 2 hours to complete, including gathering, preparing, and submitting the completed application form to the USPTO. Time will vary depending upon the individual case. Any comments on the amount of time you require to complete this form and/or suggestions for reducing this burden, should be sent to the Chief Information Officer, U.S. Patent and Trademark Office, P.O. Box 1450, Alexandria, VA 22313-1450. DO NOT SEND FEES OR COMPLETED FORMS TO THIS ADDRESS. **SEND TO: Commissioner for Patents, P.O. Box 1450, Alexandria, VA 22313-1450**.

If you need assistance in completing the form, call 1-800-PTO-9199 (1-800-786-9199) and select option 2.

Under the Paperwork Reduction Act of 1995, no persons are required to respond to a collection of information unless it contains a valid OMB control number.

Substitute for form 1449/PTO

INFORMATION DISCLOSURE STATEMENT BY APPLICANT

Date Submitted: February 7, 2022

(use as many sheets as necessary)

Sheet 1 of 2

Complete if Known	
Application Number	17/536,521
Filing Date	November 29, 2021
First Named Inventor	Yaron Brunner
Art Unit	3736
Examiner Name	WEINERTH, GIDEON R
Attorney Docket Number	066749-3309

U.S. PATENT DOCUMENTS

Examiner Initials*	Cite No.[1]	Document Number Number-Kind Code[2] (*if known*)	Publication Date MM-DD-YYYY	Name of Patentee or Applicant of Cited Document	Pages, Columns, Lines, Where Relevant Passages or Relevant Figures Appear
	A1	2,386,343	10-09-1945	Regenhardt	
	A2	3,552,817	01-05-1971	Marcolongo	
	A3	3,567,298	03-02-1971	Ambaum et al.	
	A4	3,851,936	12-03-1974	Muller	
	A5	4,564,732	01-14-1986	Lancaster et al.	
	A6	4,660,725	04-28-1987	Fishman et al.	
	A7	5,154,291	10-13-1992	Sur	
	A8	5,454,634	10-03-1995	Herbst et al.	
	A9	6,371,321	04-16-2002	Lee	
	A10	7,350,648	04-01-2008	Gerstner et al.	
	A11	8,894,160	11-25-2014	Christensen	
	A12	2004/0149754	08-05-2004	Diamant	
	A13	2006/0165482	07-27-2006	Olberding	
	A14	2007/0006542	01-11-2007	Duke	
	A15	2008/0280523	11-13-2008	Bishop	

UNPUBLISHED U.S. PATENT APPLICATION DOCUMENTS

Examiner Initials*	Cite No.[1]	U.S. Patent Application Document Serial Number-Kind Code[2] (*if known*)	Filing Date of Cited Document MM-DD-YYYY	Name of Patentee or Applicant of Cited Document	Pages, Columns, Lines, Where Relevant Passages or Relevant Figures Appear

FOREIGN PATENT DOCUMENTS

Examiner Initials*	Cite No.[1]	Foreign Patent Document Country Code[3]-Number[4]-Kind Code[5] (*if known*)	Publication Date MM-DD-YYYY	Name of Patentee or Applicant of Cited Documents	Pages, Columns, Lines, Where Relevant Passages or Relevant Figures Appear	T[6]

NON PATENT LITERATURE DOCUMENTS

Examiner Signature		Date Considered	

*EXAMINER: Initial if reference considered, whether or not citation is in conformance with MPEP 609. Draw line through citation if not in conformance and not considered. Include copy of this form with next communication to applicant. 1 Applicant's unique citation designation number (optional). 2 See Kinds Codes of USPTO Patent Documents at www.uspto.gov or MPEP 901.04. 3 Enter Office that issued the document, by the two-letter code (WIPO Standard ST.3). 4 For Japanese patent documents, the indication of the year of the reign of the Emperor must precede the serial number of the patent document. 5 Kind of document by the appropriate symbols as indicated on the document under WIPO Standard ST.16 if possible. 6 Applicant is to place a check mark here if English language Translation is attached.

This collection of information is required by 37 CFR 1.97 and 1.98. The information is required to obtain or retain a benefit by the public which is to file (and by the USPTO to process) an application. Confidentiality is governed by 35 U.S.C. 122 and 37 CFR 1.14. This collection is estimated to take 2 hours to complete, including gathering, preparing, and submitting the completed application form to the USPTO. Time will vary depending upon the individual case. Any comments on the amount of time you require to complete this form and/or suggestions for reducing this burden, should be sent to the Chief Information Officer, U.S. Patent and Trademark Office, P.O. Box 1450, Alexandria, VA 22313-1450. DO NOT SEND FEES OR COMPLETED FORMS TO THIS ADDRESS. **SEND TO: Commissioner for Patents, P.O. Box 1450, Alexandria, VA 22313-1450**.

If you need assistance in completing the form, call 1-800-PTO-9199 (1-800-786-9199) and select option 2.

Under the Paperwork Reduction Act of 1995, no persons are required to respond to a collection of information unless it contains a valid OMB control number.

Substitute for form 1449/PTO

INFORMATION DISCLOSURE STATEMENT BY APPLICANT

Date Submitted: February 7, 2022

(use as many sheets as necessary)

Sheet	2	of	2

Complete if Known	
Application Number	17/536,521
Filing Date	November 29, 2021
First Named Inventor	Yaron Brunner
Art Unit	3736
Examiner Name	WEINERTH, GIDEON R
Attorney Docket Number	066749-3309

Examiner Initials*	Cite No.[1]	Include name of the author (in CAPITAL LETTERS), title of the article (when appropriate), title of the item (book, magazine, journal, serial, symposium, catalog, etc.) date, page(s), volume-issue number(s), publisher, city and/or country where published.	T[6]

Examiner Signature		Date Considered	

*EXAMINER: Initial if reference considered, whether or not citation is in conformance with MPEP 609. Draw line through citation if not in conformance and not considered. Include copy of this form with next communication to applicant. 1 Applicant's unique citation designation number (optional). 2 See Kinds Codes of USPTO Patent Documents at www.uspto.gov or MPEP 901.04. 3 Enter Office that issued the document, by the two-letter code (WIPO Standard ST.3). 4 For Japanese patent documents, the indication of the year of the reign of the Emperor must precede the serial number of the patent document. 5 Kind of document by the appropriate symbols as indicated on the document under WIPO Standard ST.16 if possible. 6 Applicant is to place a check mark here if English language Translation is attached.

This collection of information is required by 37 CFR 1.97 and 1.98. The information is required to obtain or retain a benefit by the public which is to file (and by the USPTO to process) an application. Confidentiality is governed by 35 U.S.C. 122 and 37 CFR 1.14. This collection is estimated to take 2 hours to complete, including gathering, preparing, and submitting the completed application form to the USPTO. Time will vary depending upon the individual case. Any comments on the amount of time you require to complete this form and/or suggestions for reducing this burden, should be sent to the Chief Information Officer, U.S. Patent and Trademark Office, P.O. Box 1450, Alexandria, VA 22313-1450. DO NOT SEND FEES OR COMPLETED FORMS TO THIS ADDRESS. **SEND TO: Commissioner for Patents, P.O. Box 1450, Alexandria, VA 22313-1450**.

If you need assistance in completing the form, call 1-800-PTO-9199 (1-800-786-9199) and select option 2.

Electronic Acknowledgement Receipt

EFS ID:	44933129
Application Number:	17536521
International Application Number:	
Confirmation Number:	7250
Title of Invention:	Utility Assembly and Coupling Mechanism
First Named Inventor/Applicant Name:	Yaron Brunner
Customer Number:	142078
Filer:	Derek Howard Campbell/Sarah Sesterhenn-Lee
Filer Authorized By:	Derek Howard Campbell
Attorney Docket Number:	066749-3309
Receipt Date:	07-FEB-2022
Filing Date:	29-NOV-2021
Time Stamp:	18:02:38
Application Type:	Utility under 35 USC 111(a)

Payment information:

Submitted with Payment	no

File Listing:

Document Number	Document Description	File Name	File Size(Bytes)/ Message Digest	Multi Part /.zip	Pages (if appl.)
1	Transmittal Letter	066749-3309-IDS_Transmittal.pdf	86796 b97cd98aeb36be3a50a1fa7c5a220478d512057c	no	2

Warnings:

Information:					
2	Information Disclosure Statement (IDS) Form (SB08)	066749-3309-SB08.pdf	121388 4f3fe830883bde0cf89e512ec8f646b9bcc68f03	no	2
Warnings:					
Information:					
This is not an USPTO supplied IDS fillable form					
			Total Files Size (in bytes):	208184	

This Acknowledgement Receipt evidences receipt on the noted date by the USPTO of the indicated documents, characterized by the applicant, and including page counts, where applicable. It serves as evidence of receipt similar to a Post Card, as described in MPEP 503.

<u>New Applications Under 35 U.S.C. 111</u>
If a new application is being filed and the application includes the necessary components for a filing date (see 37 CFR 1.53(b)-(d) and MPEP 506), a Filing Receipt (37 CFR 1.54) will be issued in due course and the date shown on this Acknowledgement Receipt will establish the filing date of the application.
<u>National Stage of an International Application under 35 U.S.C. 371</u>
If a timely submission to enter the national stage of an international application is compliant with the conditions of 35 U.S.C. 371 and other applicable requirements a Form PCT/DO/EO/903 indicating acceptance of the application as a national stage submission under 35 U.S.C. 371 will be issued in addition to the Filing Receipt, in due course.
<u>New International Application Filed with the USPTO as a Receiving Office</u>
If a new international application is being filed and the international application includes the necessary components for an international filing date (see PCT Article 11 and MPEP 1810), a Notification of the International Application Number and of the International Filing Date (Form PCT/RO/105) will be issued in due course, subject to prescriptions concerning national security, and the date shown on this Acknowledgement Receipt will establish the international filing date of the application.

IN THE UNITED STATES PATENT AND TRADEMARK OFFICE

Applicant: Milwaukee Electric Tool Corporation et al.

Title: Utility Assembly and Coupling Mechanism

Appl. No.: 17/536,521

Filing Date: November 29, 2021

Examiner: WEINERTH, GIDEON R.

Art Unit: 3736

Confirmation Number: 7250

INFORMATION DISCLOSURE STATEMENT UNDER 37 CFR §1.56

Mail Stop Amendment
Commissioner for Patents
P.O. Box 1450
Alexandria, VA 22313-1450

Submitted herewith on Form PTO/SB/08 is a listing of the documents known to Applicants in order to comply with Applicants' duty of disclosure pursuant to 37 CFR § 1.56.

The submission of any document herewith, which is not a statutory bar, is not intended as an admission that such document constitutes prior art against the claims of the present application or that such document is considered material to patentability as defined in 37 CFR §1.56(b). Applicants do not waive any rights to take any action which would be appropriate to antedate or otherwise remove as a competent reference any document which is determined to be a *prima facie* art reference against the claims of the present application.

TIMING OF THE DISCLOSURE

The listed documents are being submitted in compliance with 37 CFR §1.97(b)(1), within three (3) months of the filing date of the application.

RELEVANCE OF EACH DOCUMENT

All of the documents are in English.

Applicants respectfully request that each listed document be considered by the Examiner and be made of record in the present application and that an initialed copy of Form PTO/SB/08 be returned in accordance with MPEP §609.

Although Applicant believes that no fee is required for this Request, the Commissioner is hereby authorized to charge any additional fees which may be required for this Request to Deposit Account No. 18-0882.

Respectfully submitted,

Date February 7, 2022

By /Derek H. Campbell/

Reinhart Boerner Van Deuren s.c.
Customer Number: 142078
Telephone: (414) 298-8374
Facsimile: (414) 298-8097

Derek H. Campbell
Attorney for Applicant
Registration No. 70,608

UNITED STATES PATENT AND TRADEMARK OFFICE

UNITED STATES DEPARTMENT OF COMMERCE
United States Patent and Trademark Office
Address: COMMISSIONER FOR PATENTS
P.O. Box 1450
Alexandria, Virginia 22313-1450
www.uspto.gov

APPLICATION NO.	FILING DATE	FIRST NAMED INVENTOR	ATTORNEY DOCKET NO.	CONFIRMATION NO.
17/536,521	11/29/2021	Yaron Brunner	066749-3309	7250

142078 7590 01/20/2022
Reinhart (Milwaukee Tool)
ATTN: TRAVIS MCDONNELL, PARALEGAL
1000 NORTH WATER STREET
SUITE 2100
MILWAUKEE, WI 53202

EXAMINER
CENTRAL, DOCKET

ART UNIT	PAPER NUMBER
3736	

NOTIFICATION DATE	DELIVERY MODE
01/20/2022	ELECTRONIC

Please find below and/or attached an Office communication concerning this application or proceeding.

The time period for reply, if any, is set in the attached communication.

Notice of the Office communication was sent electronically on above-indicated "Notification Date" to the following e-mail address(es):

IPAdmin@reinhartlaw.com

Decision Granting Request for Prioritized Examination (Track I)	**Application No.** 17/536,521	**Applicant(s)** Brunner et al.	
	Examiner CHERYL P GIBSON BAYLOR	**Art Unit** OPET	**AIA (FITF) Status** Yes

1. THE REQUEST FILED 29 November 2021 IS **GRANTED** .

   The above-identified application has met the requirements for prioritized examination
   A. ☑ for an original nonprovisional application (Track I).
   B. ☐ for an application undergoing continued examination (RCE).

2. **The above-identified application will undergo prioritized examination**. The application will be accorded special status throughout its entire course of prosecution until one of the following occurs:

   A. filing a **petition for extension of time** to extend the time period for filing a reply;

   B. filing an **amendment to amend the application to contain more than four independent claims, more than thirty total claims** , or a multiple dependent claim;

   C. filing a **request for continued examination** ;

   D. filing a notice of appeal;

   E. filing a request for suspension of action;

   F. mailing of a notice of allowance;

   G. mailing of a final Office action;

   H. completion of examination as defined in 37 CFR 41.102; or

   I. abandonment of the application.

Telephone inquiries with regard to this decision should be directed to CHERYL GIBSON BAYLOR at (571)272-3213. In his/her absence, calls may be directed to Petition Help Desk at (571) 272-3282.

/CHERYL GIBSON BAYLOR/ Paralegal Specialist, OPET	

U.S. Patent and Trademark Office
PTO-2298 (Rev. 02-2012)

UNITED STATES PATENT AND TRADEMARK OFFICE

UNITED STATES DEPARTMENT OF COMMERCE
United States Patent and Trademark Office
Address: COMMISSIONER FOR PATENTS
P.O. Box 1450
Alexandria, Virginia 22313-1450
www.uspto.gov

APPLICATION NUMBER	FILING OR 371(C) DATE	FIRST NAMED APPLICANT	ATTY. DOCKET NO./TITLE
17/536,521	11/29/2021	Yaron Brunner	066749-3309

CONFIRMATION NO. 7250

IMPROPER CPOA LETTER

142078
Reinhart (Milwaukee Tool)
ATTN: TRAVIS MCDONNELL, PARALEGAL
1000 NORTH WATER STREET
SUITE 2100
MILWAUKEE, WI 53202

OC000000130345951

Date Mailed: 12/10/2021

NOTICE REGARDING POWER OF ATTORNEY

This is in response to the power of attorney filed 11/29/2021. The power of attorney in this application is not accepted for the reason(s) listed below:

- The revocation is not signed by the applicant, the assignee of the entire interest, or one particular principal attorney having the authority to revoke.

/hnguyen/

Office of Data Management, Application Assistance Unit (571) 272-4000, or (571) 272-4200, or 1-888-786-0101

PATENT APPLICATION FEE DETERMINATION RECORD

Substitute for Form PTO-875

Application or Docket Number
17/536,521

APPLICATION AS FILED - PART I

FOR	(Column 1) NUMBER FILED	(Column 2) NUMBER EXTRA	SMALL ENTITY RATE($)	SMALL ENTITY FEE($)	OR	OTHER THAN SMALL ENTITY RATE($)	OTHER THAN SMALL ENTITY FEE($)
BASIC FEE (37 CFR 1.16(a), (b), or (c))	N/A	N/A	N/A			N/A	320
SEARCH FEE (37 CFR 1.16(k), (i), or (m))	N/A	N/A	N/A			N/A	700
EXAMINATION FEE (37 CFR 1.16(o), (p), or (q))	N/A	N/A	N/A			N/A	800
TOTAL CLAIMS (37 CFR 1.16(i))	11 minus 20 =	*			OR	x 100 =	0.00
INDEPENDENT CLAIMS (37 CFR 1.16(h))	1 minus 3 =	*				x 480 =	0.00
APPLICATION SIZE FEE (37 CFR 1.16(s))	If the specification and drawings exceed 100 sheets of paper, the application size fee due is $310 ($155 for small entity) for each additional 50 sheets or fraction thereof. See 35 U.S.C. 41(a)(1)(G) and 37 CFR 1.16(s).						0.00
MULTIPLE DEPENDENT CLAIM PRESENT (37 CFR 1.16(j))							0.00
* If the difference in column 1 is less than zero, enter "0" in column 2.			TOTAL			TOTAL	1820

APPLICATION AS AMENDED - PART II

		(Column 1) CLAIMS REMAINING AFTER AMENDMENT		(Column 2) HIGHEST NUMBER PREVIOUSLY PAID FOR	(Column 3) PRESENT EXTRA	SMALL ENTITY RATE($)	SMALL ENTITY ADDITIONAL FEE($)	OR	OTHER THAN SMALL ENTITY RATE($)	OTHER THAN SMALL ENTITY ADDITIONAL FEE($)
AMENDMENT A	Total (37 CFR 1.16(i))	*	Minus	**	=	x =		OR	x =	
AMENDMENT A	Independent (37 CFR 1.16(h))	*	Minus	***	=	x =		OR	x =	
AMENDMENT A	Application Size Fee (37 CFR 1.16(s))									
AMENDMENT A	FIRST PRESENTATION OF MULTIPLE DEPENDENT CLAIM (37 CFR 1.16(j))							OR		
						TOTAL ADD'L FEE		OR	TOTAL ADD'L FEE	

		(Column 1) CLAIMS REMAINING AFTER AMENDMENT		(Column 2) HIGHEST NUMBER PREVIOUSLY PAID FOR	(Column 3) PRESENT EXTRA	SMALL ENTITY RATE($)	SMALL ENTITY ADDITIONAL FEE($)	OR	OTHER THAN SMALL ENTITY RATE($)	OTHER THAN SMALL ENTITY ADDITIONAL FEE($)
AMENDMENT B	Total (37 CFR 1.16(i))	*	Minus	**	=	x =		OR	x =	
AMENDMENT B	Independent (37 CFR 1.16(h))	*	Minus	***	=	x =		OR	x =	
AMENDMENT B	Application Size Fee (37 CFR 1.16(s))									
AMENDMENT B	FIRST PRESENTATION OF MULTIPLE DEPENDENT CLAIM (37 CFR 1.16(j))							OR		
						TOTAL ADD'L FEE		OR	TOTAL ADD'L FEE	

* If the entry in column 1 is less than the entry in column 2, write "0" in column 3.
** If the "Highest Number Previously Paid For" IN THIS SPACE is less than 20, enter "20".
*** If the "Highest Number Previously Paid For" IN THIS SPACE is less than 3, enter "3".
The "Highest Number Previously Paid For" (Total or Independent) is the highest found in the appropriate box in column 1.

UNITED STATES PATENT AND TRADEMARK OFFICE

UNITED STATES DEPARTMENT OF COMMERCE
United States Patent and Trademark Office
Address: COMMISSIONER FOR PATENTS
P.O. Box 1450
Alexandria, Virginia 22313-1450
www.uspto.gov

APPLICATION NUMBER	FILING or 371(c) DATE	GRP ART UNIT	FIL FEE REC'D	ATTY.DOCKET.NO	TOT CLAIMS	IND CLAIMS
17/536,521	11/29/2021		1820	066749-3309	11	1

CONFIRMATION NO. 7250

FILING RECEIPT

OC000000130345929

142078
Reinhart (Milwaukee Tool)
ATTN: TRAVIS MCDONNELL, PARALEGAL
1000 NORTH WATER STREET
SUITE 2100
MILWAUKEE, WI 53202

Date Mailed: 12/10/2021

Receipt is acknowledged of this non-provisional utility patent application. The application will be taken up for examination in due course. Applicant will be notified as to the results of the examination. Any correspondence concerning the application must include the following identification information: the U.S. APPLICATION NUMBER, FILING DATE, NAME OF FIRST INVENTOR, and TITLE OF INVENTION. Fees transmitted by check or draft are subject to collection.

Please verify the accuracy of the data presented on this receipt. If an error is noted on this Filing Receipt, please submit a written request for a corrected Filing Receipt, including a properly marked-up ADS showing the changes with strike-through for deletions and underlining for additions. If you received a "Notice to File Missing Parts" or other Notice requiring a response for this application, please submit any request for correction to this Filing Receipt with your reply to the Notice. When the USPTO processes the reply to the Notice, the USPTO will generate another Filing Receipt incorporating the requested corrections provided that the request is grantable.

Inventor(s)

Yaron Brunner, Kibbutz Gvat, ISRAEL;
Grant T. Squiers, Cudahy, WI;
Christopher S. Hoppe, Cedarburg, WI;
Steven W. Hyma, Milwaukee, WI;

Applicant(s)

Milwaukee Electric Tool Corporation, Brookfield, WI;
Keter Plastic LTD., Herzelyia, ISRAEL;

Power of Attorney: None

Domestic Priority data as claimed by applicant

This application is a CON of 17/391,904 08/02/2021 PAT 11192690
which is a CON of 17/132,609 12/23/2020
which is a CON of 17/064,371 10/06/2020
which is a CON of 16/752,441 01/24/2020 PAT 11008136
which is a CON of 16/216,724 12/11/2018 PAT 10583962
which is a CON of 15/826,232 11/29/2017 PAT 10703534
which is a CON of PCT/IL2017/050481 04/30/2017
which claims benefit of 62/459,076 02/15/2017
and claims benefit of 62/330,334 05/02/2016

Foreign Applications for which priority is claimed (You may be eligible to benefit from the **Patent Prosecution Highway** program at the USPTO. Please see http://www.uspto.gov for more information.) - None.

Foreign application information must be provided in an Application Data Sheet in order to constitute a claim to foreign priority. See 37 CFR 1.55 and 1.76.

Permission to Access Application via Priority Document Exchange: Yes

Permission to Access Search Results: Yes

Applicant may provide or rescind an authorization for access using Form PTO/SB/39 or Form PTO/SB/69 as appropriate.

If Required, Foreign Filing License Granted: 12/08/2021

The country code and number of your priority application, to be used for filing abroad under the Paris Convention, is **US 17/536,521**

Projected Publication Date: 03/17/2022

Non-Publication Request: No

Early Publication Request: No
Title

Utility Assembly and Coupling Mechanism

Preliminary Class

Statement under 37 CFR 1.55 or 1.78 for AIA (First Inventor to File) Transition Applications: No

PROTECTING YOUR INVENTION OUTSIDE THE UNITED STATES

Since the rights granted by a U.S. patent extend only throughout the territory of the United States and have no effect in a foreign country, an inventor who wishes patent protection in another country must apply for a patent in a specific country or in regional patent offices. Applicants may wish to consider the filing of an international application under the Patent Cooperation Treaty (PCT). An international (PCT) application generally has the same effect as a regular national patent application in each PCT-member country. The PCT process **simplifies** the filing of patent applications on the same invention in member countries, but **does not result** in a grant of "an international patent" and does not eliminate the need of applicants to file additional documents and fees in countries where patent protection is desired.

Almost every country has its own patent law, and a person desiring a patent in a particular country must make an application for patent in that country in accordance with its particular laws. Since the laws of many countries differ in various respects from the patent law of the United States, applicants are advised to seek guidance from specific foreign countries to ensure that patent rights are not lost prematurely.

Applicants also are advised that in the case of inventions made in the United States, the Director of the USPTO must issue a license before applicants can apply for a patent in a foreign country. The filing of a U.S. patent application serves as a request for a foreign filing license. The application's filing receipt contains further information and guidance as to the status of applicant's license for foreign filing.

Applicants may wish to consult the USPTO booklet, "General Information Concerning Patents" (specifically, the section entitled "Treaties and Foreign Patents") for more information on timeframes and deadlines for filing foreign

patent applications. The guide is available either by contacting the USPTO Contact Center at 800-786-9199, or it can be viewed on the USPTO website at http://www.uspto.gov/web/offices/pac/doc/general/index.html.

For information on preventing theft of your intellectual property (patents, trademarks and copyrights), you may wish to consult the U.S. Government website, http://www.stopfakes.gov. Part of a Department of Commerce initiative, this website includes self-help "toolkits" giving innovators guidance on how to protect intellectual property in specific countries such as China, Korea and Mexico. For questions regarding patent enforcement issues, applicants may call the U.S. Government hotline at 1-866-999-HALT (1-866-999-4258).

LICENSE FOR FOREIGN FILING UNDER

Title 35, United States Code, Section 184

Title 37, Code of Federal Regulations, 5.11 & 5.15

GRANTED

The applicant has been granted a license under 35 U.S.C. 184, if the phrase "IF REQUIRED, FOREIGN FILING LICENSE GRANTED" followed by a date appears on this form. Such licenses are issued in all applications where the conditions for issuance of a license have been met, regardless of whether or not a license may be required as set forth in 37 CFR 5.15. The scope and limitations of this license are set forth in 37 CFR 5.15(a) unless an earlier license has been issued under 37 CFR 5.15(b). The license is subject to revocation upon written notification. The date indicated is the effective date of the license, unless an earlier license of similar scope has been granted under 37 CFR 5.13 or 5.14.

This license is to be retained by the licensee and may be used at any time on or after the effective date thereof unless it is revoked. This license is automatically transferred to any related applications(s) filed under 37 CFR 1.53(d). This license is not retroactive.

The grant of a license does not in any way lessen the responsibility of a licensee for the security of the subject matter as imposed by any Government contract or the provisions of existing laws relating to espionage and the national security or the export of technical data. Licensees should apprise themselves of current regulations especially with respect to certain countries, of other agencies, particularly the Office of Defense Trade Controls, Department of State (with respect to Arms, Munitions and Implements of War (22 CFR 121-128)); the Bureau of Industry and Security, Department of Commerce (15 CFR parts 730-774); the Office of Foreign AssetsControl, Department of Treasury (31 CFR Parts 500+) and the Department of Energy.

NOT GRANTED

No license under 35 U.S.C. 184 has been granted at this time, if the phrase "IF REQUIRED, FOREIGN FILING LICENSE GRANTED" DOES NOT appear on this form. Applicant may still petition for a license under 37 CFR 5.12, if a license is desired before the expiration of 6 months from the filing date of the application. If 6 months has lapsed from the filing date of this application and the licensee has not received any indication of a secrecy order under 35 U.S.C. 181, the licensee may foreign file the application pursuant to 37 CFR 5.15(b).

SelectUSA

The United States represents the largest, most dynamic marketplace in the world and is an unparalleled location for business investment, innovation, and commercialization of new technologies. The U.S. offers tremendous resources and advantages for those who invest and manufacture goods here. Through SelectUSA, our nation works to promote and facilitate business investment. SelectUSA provides information assistance to the international investor community; serves as an ombudsman for existing and potential investors; advocates on behalf of U.S. cities, states, and regions competing for global investment; and counsels U.S. economic development organizations on investment attraction best practices. To learn more about why the United States is the best country in the world to develop technology, manufacture products, deliver services, and grow your business, visit http://www.SelectUSA.gov or call +1-202-482-6800.

CERTIFICATION AND REQUEST FOR PRIORITIZED EXAMINATION UNDER 37 CFR 1.102(e) (Page 1 of 1)

First Named Inventor:	Yaron Brunner	Nonprovisional Application Number (if known):	To be determined
Title of Invention:	Utility Assembly and Coupling Mechanism		

APPLICANT HEREBY CERTIFIES THE FOLLOWING AND REQUESTS PRIORITIZED EXAMINATION FOR THE ABOVE-IDENTIFIED APPLICATION.

1. The processing fee set forth in 37 CFR 1.17(i)(1) and the prioritized examination fee set forth in 37 CFR 1.17(c) have been filed with the request. The publication fee requirement is met because that fee, set forth in 37 CFR 1.18(d), is currently $0. The basic filing fee, search fee, and examination fee are filed with the request or have been already been paid. I understand that any required excess claims fees or application size fee must be paid for the application.

2. I understand that the application may not contain, or be amended to contain, more than four independent claims, more than thirty total claims, or any multiple dependent claims, and that any request for an extension of time will cause an outstanding Track I request to be dismissed.

3. The applicable box is checked below:

I. ☑ Original Application (Track One) - Prioritized Examination under § 1.102(e)(1)

i. (a) The application is an original nonprovisional utility application filed under 35 U.S.C. 111(a). This certification and request is being filed with the utility application via EFS-Web.

---OR---

(b) The application is an original nonprovisional plant application filed under 35 U.S.C. 111(a). This certification and request is being filed with the plant application in paper.

ii. An executed inventor's oath or declaration under 37 CFR 1.63 or 37 CFR 1.64 for each inventor, **or** the application data sheet meeting the conditions specified in 37 CFR 1.53(f)(3)(i) is filed with the application.

II. ☐ Request for Continued Examination - Prioritized Examination under § 1.102(e)(2)

i. A request for continued examination has been filed with, or prior to, this form.
ii. If the application is a utility application, this certification and request is being filed via EFS-Web.
iii. The application is an original nonprovisional utility application filed under 35 U.S.C. 111(a), or is a national stage entry under 35 U.S.C. 371.
iv. This certification and request is being filed prior to the mailing of a first Office action responsive to the request for continued examination.
v. No prior request for continued examination has been granted prioritized examination status under 37 CFR 1.102(e)(2).

Signature /Derek H. Campbell/	Date November 29, 2021
Name (Print/Typed) Derek H. Campbell	Practitioner Registration Number 70,608

Note: *This form must be signed in accordance with 37 CFR 1.33. See 37 CFR 1.4(d) for signature requirements and certifications. Submit multiple forms if more than one signature is required.**

☑ *Total of 1 forms are submitted.

Privacy Act Statement

The **Privacy Act of 1974 (P.L. 93-579)** requires that you be given certain information in connection with your submission of the attached form related to a patent application or patent. Accordingly, pursuant to the requirements of the Act, please be advised that: (1) the general authority for the collection of this information is 35 U.S.C. 2(b)(2); (2) furnishing of the information solicited is voluntary; and (3) the principal purpose for which the information is used by the U.S. Patent and Trademark Office is to process and/or examine your submission related to a patent application or patent. If you do not furnish the requested information, the U.S. Patent and Trademark Office may not be able to process and/or examine your submission, which may result in termination of proceedings or abandonment of the application or expiration of the patent.

The information provided by you in this form will be subject to the following routine uses:

1. The information on this form will be treated confidentially to the extent allowed under the Freedom of Information Act (5 U.S.C. 552) and the Privacy Act (5 U.S.C 552a). Records from this system of records may be disclosed to the Department of Justice to determine whether disclosure of these records is required by the Freedom of Information Act.
2. A record from this system of records may be disclosed, as a routine use, in the course of presenting evidence to a court, magistrate, or administrative tribunal, including disclosures to opposing counsel in the course of settlement negotiations.
3. A record in this system of records may be disclosed, as a routine use, to a Member of Congress submitting a request involving an individual, to whom the record pertains, when the individual has requested assistance from the Member with respect to the subject matter of the record.
4. A record in this system of records may be disclosed, as a routine use, to a contractor of the Agency having need for the information in order to perform a contract. Recipients of information shall be required to comply with the requirements of the Privacy Act of 1974, as amended, pursuant to 5 U.S.C. 552a(m).
5. A record related to an International Application filed under the Patent Cooperation Treaty in this system of records may be disclosed, as a routine use, to the International Bureau of the World Intellectual Property Organization, pursuant to the Patent Cooperation Treaty.
6. A record in this system of records may be disclosed, as a routine use, to another federal agency for purposes of National Security review (35 U.S.C. 181) and for review pursuant to the Atomic Energy Act (42 U.S.C. 218(c)).
7. A record from this system of records may be disclosed, as a routine use, to the Administrator, General Services, or his/her designee, during an inspection of records conducted by GSA as part of that agency's responsibility to recommend improvements in records management practices and programs, under authority of 44 U.S.C. 2904 and 2906. Such disclosure shall be made in accordance with the GSA regulations governing inspection of records for this purpose, and any other relevant (*i.e.*, GSA or Commerce) directive. Such disclosure shall not be used to make determinations about individuals.
8. A record from this system of records may be disclosed, as a routine use, to the public after either publication of the application pursuant to 35 U.S.C. 122(b) or issuance of a patent pursuant to 35 U.S.C. 151. Further, a record may be disclosed, subject to the limitations of 37 CFR 1.14, as a routine use, to the public if the record was filed in an application which became abandoned or in which the proceedings were terminated and which application is referenced by either a published application, an application open to public inspection or an issued patent.
9. A record from this system of records may be disclosed, as a routine use, to a Federal, State, or local law enforcement agency, if the USPTO becomes aware of a violation or potential violation of law or regulation.

IN THE UNITED STATES PATENT AND TRADEMARK OFFICE

Applicant:	Milwaukee Electric Tool Corporation et al.
Title:	Utility Assembly and Coupling Mechanism
Appl. No.:	To be determined
Filing Date:	November 29, 2021
Examiner:	To be determined
Art Unit:	To be determined
Confirmation No:	To be determined

Mail Stop Amendment
Commissioner for Patents
P.O. Box 1450
Alexandria, VA 22313-1450

PRELIMINARY AMENDMENT UNDER 37 CFR 1.115

Prior to examination of the present application, Applicant respectfully requests that the application be amended as follows:

Amendments to the Claims begin on page 2 of this document.

Remarks begin on page 5 of this document.

Please amend the application as follows:

Amendments to the Claims:

This listing of claims will replace all prior versions, and listings, of claims in the application:

Listing of Claims:

1-20. (Cancelled)

21. (New) A container assembly comprising:

a first container comprising:

a first coupler extending from a first face of the first container, the first coupler comprising two sidewalls, a back wall, and a rib, the back wall located between the two sidewalls, the two sidewalls and the back wall projecting from a depressed surface of the first face, and the rib extending from the back wall in a first direction;

a lid pivotally attached to the first container; and

a toggle locking latch configured to latch the lid of the first container in a closed position;

a second container comprising:

a second coupler extending from a second face of the second container, the second coupler comprising a tongue offset from the second face, the tongue extends in a second direction opposite the first direction, the tongue of the second container is engageable with the rib of the first container;

a lid pivotally attached to the second container; and

a toggle locking latch configured to latch the lid of the second container in a closed position;

wherein the first and second couplers of the first and second containers engage each other when the first and second containers are slid with respect to each other along a sliding path defined by the rib and the tongue;

a locking latch arresting location defined by one of the first container or the second container; and

a locking latch coupled to the other of the first container or the second container, the locking latch positionable in a locked position engaging the locking latch arresting location thereby limiting sliding displacement of the first container with respect to the second container.

22. (New) The container assembly of claim 21, wherein the sliding path is perpendicular to the latch.

23. (New) The container assembly of claim 22, wherein the locking latch comprises a rear surface, wherein the sliding path is perpendicular to the rear surface.

24. (New) The container assembly of claim 23, wherein the locking latch is spring biased to engage with the locking latch arresting location.

25. (New) The container assembly of claim 21, wherein the second coupler includes a front surface opposite the tongue, wherein the front surface is slanted relative to the second face of the second container.

26. (New) The container assembly of claim 25, wherein the tongue includes a slanted surface opposite of and parallel to the front surface of the second coupler.

27. (New) The container assembly of claim 21, wherein the first face of the first container comprises a top face of the lid of the first container, and wherein the second face of the second container comprises a bottom face of the second container.

28. (New) The container assembly of claim 21, wherein a width of the second container is half of a width of the first container, and the second container is located on top of the first container.

29. (New) The container assembly of claim 28, wherein the first container further comprises a second toggle locking latch configured to latch the lid of the first container in a closed position.

30. (New) The container assembly of claim 29, wherein the first container further comprises a handle coupled to a front face of the first container, wherein the handle is located between the first and second toggle locking latches.

31. (New) The container assembly of claim 21, wherein the second container further comprises a pair of rear wheels and a telescoping handle extending upwards from a rear wall of the second container.

REMARKS

Applicant respectfully requests that the foregoing amendments to the claims be made prior to examination of the present application. Support for new claims 21-31 can generally be found throughout the specification, and specific exemplary support can be found in paragraphs [00197] to [00209] and [00211] and FIGS. 1A to 4D and 6B. No new matter has been added with this amendment.

Applicant believes that the present application is in condition for allowance. Favorable consideration of the application as amended is respectfully requested. The Examiner is invited to contact the undersigned by telephone if it is felt that a telephone interview would advance the prosecution of the present application.

Although Applicant believes that no additional fee is required for this Request, the Commissioner is hereby authorized to charge any additional fees which may be required for this Request to Deposit Account No. 18-0882.

Respectfully submitted,

Date November 29, 2021

By /Derek H. Campbell/

Reinhart Boerner Van Deuren s.c.
Customer Number: 142078
Telephone: (414) 298-8374
Facsimile: (414) 298-8097

Derek H. Campbell
Attorney for Applicant
Registration No. 70,608

U.S. PATENT APPLICATION

for

UTILITY ASSEMBLY AND COUPLING MECHANISM

Inventors: Yaron Brunner
Grant T. Squiers
Christopher S. Hoppe
Steven W. Hyma

UTILITY ASSEMBLY AND COUPLING MECHANISM

CROSS-REFERENCE TO RELATED PATENT APPLICATIONS

[0001] This application is a continuation of U.S. Application No. 17/391,904, filed August 2, 2021, which is a continuation of U.S. Application No. 17/132,609, filed December 23, 2020, which is a continuation of U.S. Application No. 17/064,371, filed October 6, 2020, which is a continuation of U.S. Application No. 16/752,441, filed January 24, 2020, now U.S. Patent No. 11,008,136, which is a continuation of U.S. Application No. 16/216,724, filed December 11, 2018, now U.S. Patent No. 10,583,962, which is a continuation of U.S. Application No. 15/826,232, filed November 29, 2017, now U.S. Patent No. 10,703,534, which is a continuation of International Application No. PCT/IL2017/050481, filed April 30, 2017, which claims priority to U.S. Provisional Application No. 62/459,076, filed February 15, 2017 and to U.S. Provisional Application No. 62/330,334, filed May 2, 2016, each of which are incorporated herein by reference in their entireties.

TECHNOLOGICAL FIELD

[0002] The present disclosure is directed to a container assembly and more specifically to a utility assembly comprising two or more detachably attachable utility modules. The disclosure is further concerned with a coupling mechanism facilitating detachably attaching the utility modules to one another.

[0003] The term 'utility module' is used hereinafter in its broad meaning and is meant to denote a variety of articles such as, storage containers, travel luggage, tool boxes, organizers, compacted work benches, cable storage, tools (e.g. hand tools, power generators and power sources), communication modules, carrying platforms, locomotion platforms, etc., of any shape and size, and wherein any utility module can be detachably attached to any other utility module.

[0004] The term 'utility assembly' as used herein denotes any set of utility modules configured for articulation to one another, either as a stationary unit or locomotive.

GENERAL DESCRIPTION

[0005] A first aspect of the disclosure concerns a coupling mechanism configured for readily detachably attaching any first article to any second article, wherein any first article and any second article can be any utility module.

[0006] The coupling mechanism comprises a male coupler at a face of one of the first utility module and the second utility module, and a female coupler at a face of the other one of the first utility module and the second utility module, said female coupler has a depressed locking location configured with at least one locking rib extending above a depressed surface and along a sliding path, and having an open edge facing in a first sense; said male coupler has a projecting locking location disposed in register with said depressed locking location and configured with at least one locking tongue extending along said engaging sliding path at a second sense, opposite to said first sense, and configured for arresting engagement at a space between said locking rib and depressed surface, the coupling mechanism further comprises at least one locking member for arresting the first utility module with respect to said second utility module and preventing sliding displacement along said sliding path.

[0007] The arrangement is such that at a locked position of a utility assembly the at least one locking tongue of the male coupler engages below said at least one locking rib of the female coupler and the at least one locking member is engaged, thus preventing any respective displacement between the first utility module and the second utility module, and retaining the coupling mechanism at an engaged and locked position.

[0008] The term 'first utility module' as used herein denotes any utility module bearing at least one second utility module over a first surface thereof. The second utility module of a utility assembly may comprise three or more stages of utility modules, and functions as first utility module with respect to a third stage utility module mounted thereover and serving in turn as a second utility module.

[0009] According to certain embodiments, one or more female couplers are configured at the top face of the first utility module, and one or more male couplers are configured at the bottom face of the second utility module

[0010] The disclosed subject-matter is directed to a utility module configured with at least one of a male coupling mechanism and a female coupling mechanism of the disclosure, a module assembly comprising one or more utility modules of the aforementioned type and a set of utility modules of the aforementioned type.

[0011] According to a configuration of the first aspect, there is provide a utility assembly comprising at least a first utility module and at least a second utility module, and comprising a coupling mechanism configured between the first utility module and the second utility module; said coupling mechanism comprising at one of a top face of the first utility module and a bottom face of the second utility module one or more depressed locking locations each configured with a locking rib, and at least one locking latch arresting location; and the other one of said top face of the first utility module and a bottom face of the second utility module comprises one or more projecting portions each configured with a locking tongue disposed in register with said one or more depressed locking locations, and at least one locking latch disposed in register with said at least one locking latch arresting location.

[0012] The arrangement is such that, at a locked position, the bottom face of the second utility module at least partially rests over the top face of the first utility module, and the one or more projecting tongues are arrested by the corresponding one or more locking ribs, and the at least one locking latch is arrested by corresponding at least one locking latch arresting location, thereby preventing sliding displacement between the first utility module and the second utility module, and further wherein disengaging the second utility module from the first utility module is facilitated by disengaging the at least one locking latch from the at least one locking latch arresting location.

[0013] Locking engagement between the second utility module and the first utility module is obtained when the one or more depressed locking locations and the one or more projecting portions are disposed behind one another (though not necessarily aligned).

[0014] According to a particular configuration of the coupling mechanism, the one or more depressed locking locations and the one or more locking latch arresting locations are configured at the top face of the first utility module, and the one or more projecting portions and the at least one locking latch are configured at the bottom face of the second utility module. According to

this configuration, locking between the first utility module and the second utility module is obtained by positioning the second utility module over the second utility module such that one or more locking tongues of the projecting portions engages with one or more respective locking ribs of the depressed locking locations, and wherein the locking latch interlocks with the respective locking latch arresting location.

[0015] The arrangement being such that the attaching engagement between the second utility module and the first utility module takes place when the one or more locking tongues and the corresponding one or more respective locking ribs are engaged, thereby preventing vertical separation between the utility modules (i.e. preventing lifting of the second utility module of the first utility module), and further when the locking latch is arrested by the respective locking latch arresting location, thereby preventing sliding displacement of the utility modules one with respect to the other (i.e. sliding displacement of the second module over the first module).

[0016] Disengaging the second utility module from the first utility module can be facilitated only after disengaging the locking latch from said locking latch arresting location.

[0017] According to a second aspect of the disclosure there is disclosed a coupling mechanism for a utility assembly comprising at least a first utility module and at least a second utility module, said coupling mechanism is configured between the first utility module and the second utility module and comprises at one of a top face of the first utility module and a bottom face of the second utility module with at least one depressed locking location configured with a locking rib, and at least one locking latch arresting location; and the other one of said top face of the first utility module and a bottom face of the second utility module comprises at least one projecting portion with a locking tongue disposed in register with said at least one depressed locking location, and at least one locking latch disposed in register with said at least one locking latch arresting location; and wherein at a locked position the bottom face at least partially rests over the top face, and the at least one projecting tongue is arrested by the corresponding at least one locking rib and the at least one locking latch is arrested by corresponding at least one locking latch arresting location, and further wherein disengaging the second utility module from the first utility module is facilitated by disengaging the at least one locking latch from the at least one locking latch arresting location.

[0018] Engaging the first and second utility modules into the locked position is provided by sliding the second utility module with respect to the first utility module along a sliding path defined by at least one of said at least one locking rib and said at least one locking tongue.

[0019] According to one particular configuration the at least one locking rib extends substantially parallel to the sliding path and according to another configuration the at least one locking rib extends substantially perpendicular and intersects the sliding path. A third aspect of the present disclosure is directed to a utility module being a mobile carrier unit and comprising at least one carrier engagement surface, compatible for interlocking engagement in a detachable manner with a first engagement surface of a utility module.

[0020] The term carrier unit as used herein denotes any kind of propelled cart configured for detachably attaching and carrying load. The carrier unit may be a hand cart, a mobile tool cart, a mobile workshop, traveling luggage cart, a trolley, etc.

[0021] With particular reference to the third aspect, the carrier engagement surface can be larger than the utility module's first engagement surface corresponding with it. In this case, several utility modules may be interlocked simultaneously upon one carrier unit. According to one configuration there is disclosed a carrier unit comprising a manipulating arrangement, a locomotion system, and an engagement surface comprising one or more engaging elements. The carrier unit is designated for detachable interlocking engagement with one or more utility modules, each comprising a first engagement surface configured with one or more first engaging elements compatible for detachable interlocking engagement with the carrier engaging elements.

[0022] According to yet configuration there is disclosed an assembly comprising a carrier unit comprising an engagement surface comprising one or more engaging elements, and at least one utility module configured with at least one first engagement surface comprising one or more first engaging elements compatible for detachable interlocking engagement with the carrier unit's engaging elements.

[0023] According to a modification of this aspect, there is also provided a container unit comprising a top member configured with a second engagement surface of the utility module, said top member, according to one example constitutes a cover of the utility module.

[0024] The arrangement is such that a container unit can be readily and easily applied over and interlockingly articulated to a carrier unit, or over a utility module configured with a second engagement surface mimicking the first engagement surface second engagement surface mimicking the first engagement surface of the carrier unit.

[0025] Engagement between the carrier unit and the container, and further between two containers, is facilitated by any locking mechanism of the disclosure hereinabove and hereinafter.

[0026] According to a specific example, there is a latching mechanism, wherein the first engaging elements of the carrier unit are configured for interlocking engagement with engaging elements of the mating surface of the respective utility module. The latching mechanism may assume various configurations, e.g. male-female couplings, dovetail couplings, and the like. The arrangement being such that only a minor displacement is required in order to lockingly mount, and respectively detach, a utility module over the carrier unit.

[0027] According to one specific configuration, the detachable interlocking engagement mechanism between the carrier engaging elements and the utility module's first engaging elements is a dovetail engagement mechanism, comprising laterally projecting shoulders configured on one of the carrier engagement surfaces and the first engagement surface of a utility module, and a shoulder receiving recess configured on the other one of one of the carrier engagement surfaces and the first engagement surface of a utility module; where said laterally projecting shoulders are configured for sliding engagement with said shoulder receiving recess.

[0028] According to a particular configuration, one or both of the carrier engagement surfaces and the first engagement surface of a respective utility module are configured with depressions, each accommodating respective laterally projecting locking shoulders. Said dovetail engagement mechanism members constitute said engaging elements, wherein said carrier engaging elements comprise one of said dovetail engagement members, while the utility module's first engaging element comprises the respective said dovetail engagement member.

[0029] According to another configuration, the detachable interlocking engagement mechanism between the carrier engaging elements and the utility module's first engaging elements is an undercut engagement mechanism, comprising lateral projections configured on

one of the carrier engagement surfaces and the first engagement surface of a container unit, and a receiving recess configured on the other one of one of the carrier engagement surfaces and the first engagement surface of a utility module; where said lateral projections are configured for engagement with said receiving recess.

[0030] Interlocking engagement of the utility module and the carrier unit takes place by placing the first engagement surface of a utility module over the carrier engagement surface, such that the utility module's first engaging elements are disposed shifted over the respective carrier engaging elements of the carrier unit, and are then slidingly shifted to obtain sliding interlocking engagement therebetween.

[0031] The detachable interlocking engagement mechanism may further comprise a locking mechanism configured for preventing unintentional detaching of the slidingly engaging elements once they are fully interlocked, i.e. to prevent detaching of the utility module from the carrier unit or from another utility module.

[0032] According to one configuration, the locking mechanism, comprises a locking pin that is configured for snapingly protruding from one of the engagement surfaces into a designated nook on the other engagement surface. This prevents the engaging surfaces from sliding relatively to each other, and by that it prevents said engaging elements from being slidingly separated once interlocked.

[0033] According to one configuration, the carrier engagement surface of the carrier unit constitutes a top wall of the carrier unit, when the carrier unit is balanced horizontally to the ground, and wherein the utility module's first engagement surface constitutes a bottom wall of the container unit, when the utility module is balanced horizontally to the ground. The utility module can further comprise a second engagement surface constituting its top wall, or a cover, when the utility module is balanced horizontally to the ground. The second engagement surface of the utility module simulates the carrier engagement surface as it is compatible for engaging with another utility module's first engagement surface.

[0034] Any one or more of the following features, designs and configurations, can be implemented in a utility module, a utility assembly, locking mechanism, and the carrier unit and assembly according to the present disclosure, individually or in various combinations thereof:

[0035] A single locking rib can extend at rear end of a depressed locking location (i.e. the female coupler may comprise a single locking rib) and substantially perpendicular to the sliding path;

[0036] Two locking ribs can extend at side edges of a depressed locking location (i.e. the female coupler may comprise two locking ribs) and disposed substantially parallel to the sliding path;

[0037] Two locking ribs can each extend at a respective side edge of two neighboring depressed locking locations, said locking ribs disposed substantially parallel to the sliding path;

[0038] The utility assembly can be modular wherein a top face of a first utility module can interlock with a bottom face of a second utility module disposed thereover in a substantially fully overlapping relation, or with a bottom face of at least one second utility module only partially overlapping therewith;

[0039] A second utility module overlapping a significant portion of a first utility module can be configured with a single release latch for displacing several locking latches articulated therewith;

[0040] Two or more second utility modules can be mounted over a first utility module, each being independently detachable attachable over the first utility module;

[0041] The at least one second utility module is configured for snap-type locking over the first utility module;

[0042] A release latch for displacing the locking latch into disengagement from the locking latch arresting location can be disposed at a front face of the respective second utility module;

[0043] The at least one locking latch and the at least one locking latch arresting location can be disposed at a front portion of the respective utility modules;

[0044] At least one of the first utility module and the second utility module are configured with a gliding surface facilitating displacement and positioning the respective second utility module at the locking position with respect to the first utility module;

[0045] The gliding surface reduces tolerances between the projecting portion and the depressed locking location receiving same;

[0046] One or both of the locking tongue and locking rib can be configured with a slanting surface at corresponding orientation, along the sliding path, for reducing or substantially elimination tolerance therebetween;

[0047] One or both of a front edge of the projecting portion and a corresponding front edge of the depressed locking location can be slanted for gliding positioning of the second utility module into true locking position over the first utility module;

[0048] The locking latch can be configured for displacement in a direction substantially normal to a respective face of a utility module;

[0049] The locking latch can be spring biased and configured for normally projecting from a face of the respective first or second utility module;

[0050] The locking latch can be manipulable to be opened through an opening configured at a front wall of the respective utility module;

[0051] Corners of the utility modules can be reinforced;

[0052] One or more of the utility modules can be a container module, and the utility assembly can be a container assembly/tool caddy;

[0053] The container module can be compartmented and can be configured with sub-containers and sub-compartments;

[0054] The top face of the container module can be configured as a lid or as a functional component of the container module;

[0055] A lid of a second container can be opened also when articulated and locked in position over a first container;

[0056] A lid of a first container can be opened also when a second container is articulated and locked in position thereabove;

[0057] At least one of the container modules can be a locomoting container and can be configured with an arrangement for locomoting said container module. Where the locomoting container is attached to other container modules it can facilitate for locomoting the utility assembly;

[0058] The container modules can be configured with carrying arrangement disposed at any one or more of its faces. According to a particular configuration, a front face of the container modules is configured with a carrying handle and according to another configuration side faces of the container modules can be configured with a carrying handle;

[0059] Examples of utility modules can be any one or more of a cooler box, a workpiece grip, a power supply (e.g. power bank, generator), hand tools, power tools, a locomotive platform (e.g. a work dolly), powered or not, a tactical unit (e.g. military gear, scientific equipment, communications equipment, personal gear, outdoor gear, etc.);

[0060] A tool caddy can be configured with a carrying handle (e.g. telescopic);

[0061] A utility module can be a soft-shell container with at least a rigid face portion configured with a male/female coupler;

[0062] The utility module can be an interface coupling module, i.e. functions only as a coupling interface;

[0063] The interface coupling module can be attached to a surface of any element or object and by different arrangements, fixedly or detachably;

[0064] The interface coupling module can be a cargo interface module for a utility vehicle, so as to attach one or more utility modules to the vehicle;

[0065] The cargo interface module can be a bed cargo module, a roof rack module, etc.;

[0066] The interface coupling module can be a surface mount for attaching utility modules, e.g. a floor mount, wall mount, wall rack, etc.;

[0067] The interface coupling module can be a tool mount/rack;

[0068] The interface coupling module can be belt mount for mounting of utility modules (e.g. a hand tool) to a workers belt;

[0069] The interface coupling module can be an interface mount module for coupling two utility modules to one another, e.g. for articulating two utility modules, both configured with a similar male coupler or a female coupler, and wherein the interface mount module is configured at both faces with another of male coupler or a female coupler;

[0070] The interface coupling module can be a back pack carrying module, for facilitating attachment and carrying of utility modules;

[0071] A top face of a utility module can be configured with a carrying handle, said carrying handle displaceable between a stowed position and a carrying position, wherein at the stowed position said carrying handle at least partially extends within a niche and does not to interfere with the coupling mechanism;

[0072] The carrier unit may include one or more auxiliary engagement surfaces positioned on an exterior face of the carrier unit. For example, an auxiliary engagement surface can be configured at a bottom face of the carrier unit;

[0073] The carrier unit may include a second engagement surface simulating/mimicking the first engagement surface of the utility module;

[0074] A utility module may be configured with one or more auxiliary first and second engagement surfaces;

[0075] The carrier engagement surface may be a connectivity platform detachably attached to the exterior surface of the carrier unit, facilitating a cart unit or a carrier unit according to the present disclosure;

[0076] One or both of the utility module's first and second engagement surfaces may be detachably attached to an exterior surface of the utility module;

[0077] The carrier engagement surface and the utility module's first engagement surface may be like elements;

[0078] The utility module's first and second engagement surfaces may be like elements;

[0079] The carrier unit's engaging elements and the utility module's first engaging elements may be similar elements;

[0080] One engagement surface may include several engaging elements and one locking mechanism;

[0081] The coupling mechanism is configured for spontaneous displacement into locking engagement within a locking receptacle, wherein manual interference is required only for unlocking the locking mechanism and detaching a utility module from a respective utility module or carrier unit;

[0082] The coupling mechanism can be a spring biased locking pin, normally projecting from a respective engagement surface;

[0083] One or both of the carrier unit and the utility module may further include a locking mechanism designated to prevent unintentional separation of the engagement surfaces while they are interlocked;

[0084] The locking mechanism is manipulable between an unlocked position in which said engagement surfaces may slide upon each other, and a locked state in which the engagement surfaces may not slide upon each other;

[0085] The locking mechanism may be configured with a biasing mechanism for snap arresting at least at its locked state;

[0086] The locking mechanism may be configured with a manually operated activating portion for switching between said unlocked and locked positions.

[0087] The carrier unit may be assembled together with other carrier units the same way it's assembled with the utility modules;

[0088] The locomotion system of the carrier unit may comprise a wheel system (e.g. axially fixed roller wheels, swivel wheels, etc.), a sliding platform, caterpillar tracks, etc;

[0089] The locomotion system of the carrier unit comprises, according to a particular example, several fixed axis wheels, wherein the perimeter of said wheels is tangent with a base edge of the carrier unit;

[0090] At an assembled configuration, where one or more utility modules are attached to the carrier unit, the assembly can be positioned vertically wherein a side face of the one or more containers rest over a supporting surface. According to a particular example, at this position the carrier unit and container assembly are configured with stability members for retaining their stability while positioned vertically to the ground;

[0091] The carrier unit may be stable while positioned horizontally to the ground, by a support system projecting from a bottom face thereof. The support system may comprise friction enhancing surfaces to restrict displacement of the assembly while placed over a bearing surface;

[0092] The carrier unit may be foldable to a more compact configuration;

[0093] The carrier unit may comprise an external storage box detachably interconnectable to its exterior walls;

[0094] The carrier unit may comprise a power supply detachably interconnectable to its exterior walls;

[0095] The carrier unit's transporting system may be motorized while powered via said power supply;

[0096] The carrier unit may further include a locking mechanism to insure interlocking connection of the engagement surfaces;

[0097] The container unit may comprise non-rigid portions;

[0098] The carrier unit may comprise at least one manipulating arrangement, configurable between a stowed position in which the manipulating arrangement is retracted, and a manipulating position in which the manipulating arrangement is extracted. The manipulating arrangement may be a telescopic or foldable handle;

[0099] The manipulating arrangement may be a gripping handle, a D-grip handle, a T-grip handle, a flexible strap, etc.

EMBODIMENTS

[00100] The present disclosure also encompasses embodiment as defined in the following numbered phrases. It should be noted that these numbered embodiments intended to add to this disclosure and is not intended in any way to be limiting.

[00101] 1. A coupling mechanism configured for readily detachably attaching a first utility module to a second utility module, the coupling mechanism comprising a male coupler at a face of one of the first utility module and the second utility module, and a female coupler at a face of the other one of the first utility module and the second utility module, said female coupler having a depressed locking location configured with at least one locking rib extending above a depressed surface and along a sliding path, and having an open edge facing in a first sense; said male coupler having a projecting locking location disposed in register with said depressed locking location and configured with at least one locking tongue extending along said engaging sliding path at a second sense, opposite to said first sense, and configured for arresting engagement at a space between said locking rib and depressed surface, the coupling mechanism further comprises at least one locking member for arresting the first utility module with respect to said second utility module and preventing sliding displacement along said sliding path.

[00102] 2. The coupling mechanism of embodiment 1, wherein said female coupler is configured at the top face of the first utility module, and the male coupler is configured at the bottom face of the second utility module.

[00103] 3. The coupling arrangement of embodiment 1 or 2, wherein the at least one locking rib extends substantially parallel to the sliding path.

[00104] 4. The coupling arrangement of embodiment 1 or 2, wherein the at least one locking rib extends substantially perpendicular and intersects the sliding path.

[00105] 5. The coupling arrangement of embodiment 1 or 2, wherein the female coupler comprises a single locking rib extends at rear end of a depressed locking location and substantially perpendicular to the sliding path.

[00106] 6. The coupling arrangement of embodiment 1 or 2, wherein the female coupler comprises two locking ribs extend at side edges of a depressed locking location and disposed substantially parallel to the sliding path.

[00107] 7. The coupling arrangement of embodiment 1 or 2, wherein the female coupler comprises two locking ribs each extend at a respective side edge of two neighboring depressed locking locations, said locking ribs disposed substantially parallel to the sliding path.

[00108] 8. A coupling mechanism for a utility assembly that comprises at least a first utility module and at least a second utility module, said coupling mechanism is configured between the first utility module and the second utility module; one of a top face of the first utility module and a bottom face of the second utility module comprises at least one depressed locking location configured with a locking rib, and at least one locking latch arresting location; and the other one of said top face of the first utility module and a bottom face of the second utility module comprises at least one projecting portion with a locking tongue disposed in register with said at least one depressed locking location, and at least one locking latch disposed in register with said at least one locking latch arresting location; and wherein at a locked position the bottom face at least partially rests over the top face, and the at least one projecting tongue is arrested by the corresponding at least one locking rib and the at least one locking latch is arrested by corresponding at least one locking latch arresting location, and further wherein disengaging the second utility module from the first utility module is facilitated by disengaging the at least one locking latch from the at least one locking latch arresting location, such that engaging the first and second utility modules into the locked position is provided by sliding the second utility module with respect to the first utility module along a sliding path defined by at least one of said at least one locking rib and said at least one locking tongue.

[00109] 9. The coupling arrangement of embodiment 8, wherein the at least one locking rib extends substantially parallel to the sliding path.

[00110] 10. The coupling arrangement of embodiment 8, wherein the at least one locking rib extends substantially perpendicular and intersects the sliding path.

[00111] 11. The coupling arrangement of embodiment 8, wherein a single locking rib extends at rear end of a depressed locking location and substantially perpendicular to the sliding path.

[00112] 12. The coupling arrangement of embodiment 8, wherein two locking ribs extend at side edges of a depressed locking location and disposed substantially parallel to the sliding path.

[00113] 13. The coupling arrangement of embodiment 8, wherein two locking ribs each extend at a respective side edge of two neighboring depressed locking locations, said locking ribs disposed substantially parallel to the sliding path.

[00114] 14. The coupling arrangement of any one of embodiments 8 to 13, further comprising a release latch for displacing the locking latch into disengagement from the locking latch arresting location can be disposed at a front face of the respective second utility module.

[00115] 15. The coupling arrangement of any one of embodiments 8 to 14, wherein the at least one locking latch and the at least one locking latch arresting location are disposed at a front portion of the respective utility modules.

[00116] 16. The coupling arrangement of any one of embodiments 8 to 15, wherein the locking latch is configured for displacement in a direction substantially normal to a respective face of a utility module.

[00117] 17. The coupling arrangement of any one of embodiments 8 to 16, wherein locking latch is spring biased and configured for normally projecting from a face of the respective first or second utility module.

[00118] 18. The coupling arrangement of any one of embodiments 8 to 17, wherein the locking latch is manipulable to be opened through an opening configured at a front wall of the respective utility module.

[00119] 19. The coupling arrangement of any one of embodiments 1 to 18, wherein one or both of the locking tongue and locking rib are configured with a slanting surface at corresponding orientation along the sliding path.

[00120] 20. The coupling arrangement of any one of embodiments 1 to 19, wherein one or both of a front edge of the projecting portion (or the projecting locking location) and a corresponding front edge of the depressed locking location are slanted for gliding positioning of the second utility module into locking position over the first utility module.

[00121] 21. The coupling mechanism of any one of embodiments 1 to 20, wherein the first utility module is configured for detachably attaching one or more second utility modules thereto.

[00122] 22. A coupling mechanism for a utility assembly comprising at least a first utility module and at least a second utility module, said coupling mechanism is configured between the first utility module and the second utility module and comprises at one of a top face of the first utility module and a bottom face of the second utility module with at least one depressed locking location configured with a locking rib, and at least one locking latch arresting location; and the other one of said top face of the first utility module and a bottom face of the second utility module comprises at least one projecting portion with a locking tongue disposed in register with said at least one depressed locking location, and at least one locking latch disposed in register with said at least one locking latch arresting location; and wherein at a locked position the bottom face at least partially rests over the top face, and the at least one projecting tongue is arrested by the corresponding at least one locking rib and the at least one locking latch is arrested by corresponding at least one locking latch arresting location, and further wherein disengaging the second utility module from the first utility module is facilitated by disengaging the at least one locking latch from the at least one locking latch arresting location.

[00123] 23. A utility assembly comprising at least a first utility module and at least a second utility module, and comprising a coupling mechanism according to any one of embodiments 1 to 21, the coupling mechanism being configured between the first utility module and the second utility module.

[00124] 24. A utility assembly comprising at least a first utility module and at least a second utility module, and comprising a coupling mechanism for readily detachably attaching the first

and second utility modules, the coupling mechanism being configured between the first utility module and the second utility module; said coupling mechanism comprising at one of a top face of the first utility module and a bottom face of the second utility module one or more depressed locking locations each configured with a locking rib, and at least one locking latch arresting location; and the other one of said top face of the first utility module and a bottom face of the second utility module comprises one or more projecting portions each configured with a locking tongue disposed in register with said one or more depressed locking locations, and at least one locking latch disposed in register with said at least one locking latch arresting location; such that at a locked position, the bottom face of the second utility module at least partially rests over the top face of the first utility module, and the one or more projecting tongues are arrested by the corresponding one or more locking ribs, and the at least one locking latch is arrested by corresponding at least one locking latch arresting location, thereby preventing sliding displacement between the first utility module and the second utility module, and disengaging the second utility module from the first utility module is facilitated by disengaging the at least one locking latch from the at least one locking latch arresting location.

[00125] 25. The utility assembly of embodiment 24, wherein the first and second utility modules are in a locking engagement when said one or more depressed locking locations and the one or more projecting portions are disposed behind one another.

[00126] 26. The utility assembly of embodiment 24 or 25, wherein said one or more depressed locking locations and said one or more locking latch arresting locations are configured at the top face of the first utility module, and the one or more projecting portions and the at least one locking latch are configured at the bottom face of the second utility module.

[00127] 27. The utility assembly of any one of embodiments 24 to 26, wherein at least one second utility module is configured for snap-type locking over the first utility module.

[00128] 28. The utility assembly of any one of embodiments 24 to 27 wherein engaging the first and second utility modules into the locked position is provided by sliding the second utility module with respect to the first utility module along a sliding path defined by at least one of said at least one locking rib and said at least one locking tongue.

[00129] 29. The utility assembly of any one of embodiments 24 to 28, wherein the at least one locking rib extends substantially parallel to the sliding path.

[00130] 30. The utility assembly of embodiment 29, wherein the at least one locking rib extends substantially perpendicular and intersects the sliding path.

[00131] 31. The utility assembly of embodiment 29, wherein a single locking rib extends at rear end of a depressed locking location and substantially perpendicular to the sliding path.

[00132] 32. The utility assembly of embodiment 29 wherein two locking ribs extend at side edges of a depressed locking location and disposed substantially parallel to the sliding path.

[00133] 33. The utility assembly of embodiment 29, wherein two locking ribs each extend at a respective side edge of two neighboring depressed locking locations, said locking ribs disposed substantially parallel to the sliding path.

[00134] 34. The utility assembly of any one of embodiments 24 to 33, wherein a top face of a first utility module interlocks with a bottom face of a second utility module disposed thereover in a substantially fully overlapping relation, or with a bottom face of at least one second utility module only partially overlapping therewith.

[00135] 35. The utility assembly of any one of embodiments 24 to 33, wherein the second utility module overlaps a significant portion of a first utility module and is configured with a single release latch for displacing several locking latches articulated therewith.

[00136] 36. The utility assembly of any one of embodiments 24 to 35, further comprising a release latch for displacing the locking latch into disengagement from the locking latch arresting location can be disposed at a front face of the respective second utility module.

[00137] 37. The utility assembly of any one of embodiments 24 to 36, wherein the locking latch is configured for displacement in a direction substantially normal to a respective face of a utility module.

[00138] 38. The utility assembly of any one of embodiments 24 to 37, wherein the locking latch is spring biased and configured for normally projecting from a face of the respective first or second utility module.

[00139] 39. The utility assembly of any one of embodiments 24 to 38, wherein two or more second utility modules can be mounted over a first utility module, each being independently detachable attachable over the first utility module.

[00140] 40. The utility assembly of any one of embodiments 24 to 39, wherein at least one of the first utility module and the second utility module are configured with a gliding surface facilitating displacement and positioning the respective second utility module at the locking position with respect to the first utility module.

[00141] 41. The utility assembly of any one of embodiments 24 to 40, wherein one or more of the utility modules is a container module, and the utility assembly is a container assembly or a tool caddy.

[00142] 42. The utility assembly of embodiment 41, wherein the container module is compartmented and optionally configured with sub-containers and sub-compartments.

[00143] 43. The utility assembly of embodiment 41 or 42, wherein a top face of the container module is configured as a lid or as a functional component of the container module.

[00144] 44. The utility assembly of any one of embodiments 41 to 43, wherein the container modules is a locomoting container, configured with an arrangement for locomoting said utility assembly.

[00145] 45. The utility assembly of any one of embodiments 41 to 44, wherein the container modules is configured with a carrying arrangement disposed at any one or more of its faces, optionally being a carrying handle.

[00146] 46. The utility assembly of any one of embodiments 24 to 40, wherein one or more of the utility modules is a soft-shell container with at least a rigid face portion.

[00147] 47. The utility assembly of any one of embodiments 24 to 40, wherein said first utility module is a mobile carrier unit.

[00148] 48. The utility assembly of any one of embodiments 24 to 47, further comprising a locking mechanism for preventing unintentional separation of the modules while they are interlocked.

[00149] 49. The utility assembly of any one of embodiments 24 to 48, wherein the first utility module is configured for detachably attaching at least two second utility modules thereto.

[00150] 50. A mobile carrier unit comprising at least one carrier engagement surface, compatible for interlocking engagement in a detachable manner with a first engagement surface of a utility module, said carrier engagement surface having (i) one or more depressed locking locations each configured with a locking rib and at least one locking latch arresting location, configured for engagement with said first engagement surface of a utility module that comprises at least one locking latch and one or more projecting portions, each projecting portion being configured with a locking tongue, or (ii) at least one locking latch and one or more projecting portions each configured with a locking tongue for engagement with said first engagement surface of a utility module that comprises one or more depressed locking locations, each depressed locking locations configured with a locking rib and at least one locking latch arresting location.

[00151] 51. The mobile carrier unit of embodiment 50, wherein once associated with the utility module, said locking tongue becomes disposed in register with said one or more depressed locking locations, and at least one locking latch become disposed in register with said at least one locking latch arresting location.

[00152] 52. The mobile carrier unit of embodiment 50 or 51, configured for detachable interlocking engagement with one or more utility modules, each utility module comprising a first engagement surface.

[00153] 53. The mobile carrier unit of any one of embodiments 50 to 52, further comprising at least one of a manipulating arrangement and a locomotion system.

[00154] 54. An assembly comprising a mobile carrier unit of any one of embodiments 50 to 53 having at least one carrier engagement surface, and at a least one utility module having a first engagement surface, the utility module being detachably interlocked with the mobile carrier unit by engaging said first engagement surface with said carrier engagement surface.

[00155] 55. The assembly of embodiment 54, wherein the mobile carrier unit and the at least one utility module are detachably interlocked with one another by a dovetail engagement mechanism, that comprises laterally projecting shoulders configured on one of the carrier engagement surfaces and the first engagement surface of a utility module, and a shoulder receiving recess configured on the other one of one of the carrier engagement surfaces and the first engagement surface of a utility module; where said laterally projecting shoulders are configured for sliding engagement with said shoulder receiving recess.

[00156] 56. The assembly of embodiment 55, wherein one or both of the carrier engagement surfaces and the first engagement surface of a respective utility module are configured with depressions, each accommodating respective laterally projecting locking shoulders.

[00157] 57. The assembly of embodiment 54, wherein the mobile carrier unit and the at least one utility module are detachably interlocked with one another by an undercut engagement mechanism, comprising lateral projections configured on one of the carrier engagement surfaces and the first engagement surface of a container unit, and a receiving recess configured on the other one of one of the carrier engagement surfaces and the first engagement surface of a utility module; where said lateral projections are configured for engagement with said receiving recess, such that interlocking engagement of the utility module and the carrier unit takes place by placing the first engagement surface of a utility module over the carrier engagement surface, such that the utility module's first engaging elements are disposed shifted over the respective carrier engaging elements of the carrier unit, and are then slidingly shifted to obtain sliding interlocking engagement therebetween.

[00158] 58. The assembly of any one of embodiments 54 to 57, further comprising a locking mechanism configured for preventing unintentional detaching of the utility module from the carrier unit.

[00159] 59. The assembly of embodiment 58, wherein the locking mechanism comprises a locking pin that is configured for snapingly protruding from one of the engagement surfaces into a designated nook on the other engagement surface.

[00160] 60. An interface coupling module comprising at least one engagement surface, compatible for interlocking engagement in a detachable manner with a first engagement surface of a utility module, said interface coupling module comprising an engagement surface having (i) one or more depressed locking locations each configured with a locking rib and at least one locking latch arresting location, configured for engagement with said first engagement surface of a utility module that comprises at least one locking latch and one or more projecting portions, each projecting portion being configured with a locking tongue, or (ii) at least one locking latch and one or more projecting portions each configured with a locking tongue for engagement with said first engagement surface of a utility module that comprises one or more depressed locking locations, each depressed locking locations configured with a locking rib and at least one locking latch arresting location

[00161] 61. The interface coupling module of embodiment 60, being configured for detachable or fixed attachment to a surface of an object.

[00162] 62. The interface coupling module of embodiment 60 or 61, being a cargo interface module for a utility vehicle configured for attaching one or more utility modules to the vehicle.

[00163] 63. The interface module of embodiment 60 or 61, being a surface mount for attaching utility modules

[00164] 64. The interface module of embodiment 60 or 61, being a tool mount or a tool rack.

[00165] 65. The interface module of embodiment 60 or 61, being a belt mount for mounting of utility modules to a workers belt;

[00166] 66. The interface module of embodiment 60 or 61, being an interface mount module for coupling two utility modules to one another.

BRIEF DESCRIPTION OF THE DRAWINGS

[00167] In order to better understand the subject matter that is disclosed herein and to exemplify how it may be carried out in practice, embodiments will now be described, by way of non-limiting examples only, with reference to the accompanying drawings, in which: Figs. 1A to 6G are directed to a first example of a locking mechanism, wherein:

[00168] Fig. 1A is a top perspective view of a container assembly according to an example of the present disclosure;

[00169] Fig. 1B is an exploded perspective view of the container assembly of Fig. 1A;

[00170] Fig. 1C is a bottom, front perspective view of Fig. 1B;

[00171] Fig. 1D is a bottom, rear perspective view of Fig. 1B;

[00172] Fig. 2A is a sectioned portion along line A-A in Fig. 1A;

[00173] Fig. 2B is a sectioned portion along line B-B in Fig. 1A;

[00174] Fig. 2C is a sectioned portion along line C-C in Fig. 1A;

[00175] Figs. 3A to 3D are consecutive steps illustrating locking engagement of the locking tongue of the second container with the respective locking rib of the first container;

[00176] Figs. 4A to 4D are consecutive steps illustrating locking engagement of the locking latch of the second container with the respective locking latch arresting location of the first container;

[00177] Figs. 5A to 5E schematically demonstrate modularity of a container assembly according to the disclosure;

[00178] Figs. 6A to 6G are various combinations of a modular container assembly according to examples of the present disclosure.

[00179] Figs 7A to 12C are directed to a carrier unit and another example of a locking mechanism, wherein:

[00180] Fig. 7A is container carrier assembly according to an example of the disclosure, illustrating a top, left perspective view of a container unit, mounted on top of a carrier unit;

[00181] Fig. 7B is a top, left perspective view of a second container unit, mounted on top of a first container unit, which in turn is mounted on top of a carrier unit according to an example of the present disclosure;

[00182] Fig. 8A is a top, left perspective view of a carrier unit, illustrating the carrier engagement surface in further detail;

[00183] Figs. 8B and 8C are a top and a bottom perspective view of a carrier unit, illustrating the container unit's first engagement surface in further detail;

[00184] Fig. 9A is a side section along line F-F in Fig. 7A, illustrating the container unit and the carrier unit unattached;

[00185] Fig. 9B is a side section along line F-F in Fig. 7A illustrating the container unit and the carrier unit attached;

[00186] Fig. 9C is a close-up view of Fig. 9B;

[00187] Fig. 9D is a sectioned view along line F-F in Fig. 7A illustrating the interlocking engagement of the carrier engaging elements together with the container unit's first engaging elements;

[00188] Fig. 10A is a sectioned view along line D-D in Fig. 7A, illustrating the locking mechanism;

[00189] Fig. 10B is an enlarged image of the portion marked M in Fig. 10A;

[00190] Fig. 11A illustrates different sizes of container units forming an assembly, at a tilted orientation;

[00191] Fig. 11B illustrates an assembled configuration balanced vertically relatively to the ground;

[00192] Fig. 12A shows a container assembly wherein the female coupler comprises two locking ribs extending at respective side edges of two neighboring depressed locking locations;

[00193] Fig. 12B is a section along line H-H in Fig. 12A;

[00194] Fig. 12C illustrates the utility module apart from the container and flipped, so as to expose the mating coupling mechanism.

[00195] Figs. 13A-13D, 14A-14C, 15A-15B, 16A-16B, 17, 18A-18C, and 19-24 are different embodiments and configurations of utility modules and utility assemblies according examples of this disclosure.

DETAILED DESCRIPTION OF EMBODIMENTS

[00196] Reference is first being made to Figs. 1A to 6G, directed to a first configuration of a coupling mechanism. For sake of convenience the utility modules are exemplified as containers and respectively the utility assembly is illustrates as a tool caddy. It is however appreciated that the utility modules can be of any type, shape or size, as discussed hereinabove and as will be exemplified below.

[00197] Attention is first directed to Figs. 1A to 4D, illustrating a container assembly generally designated 20, comprising four containers 22, 24, 26 and 28 disposed in a triple stage configuration, the stages designated A, B and C. In the illustrated example containers 24 and 26 of the second stage are half-size and overlap the footprint of the first stage container 22 and the third stage container 28, wherein the first container 22 is for example a hand tool container and containers 24 to 28 are organizers or the like.

[00198] The term 'first container' as used herein denotes a container bearing over a top face thereof at least one other container, said at least one other container denoted herein as a 'second container'. It is thus appreciated that a second container of a container assembly comprising three or more stages of containers' serves as second container when referred to the first stage container, and as a first container when referred to a third stage container mounted thereover. Accordingly, in the illustrated example of Figs. 1A-2C, container 22 is a first container and containers 24 and 26 are second containers, whilst they function as first containers when discussing locking arrangement with respect to third stage container 28.

[00199] Each of the containers is configured with a lid L constituting a top face of the respective container, said lids being pivotally attached and securely articulated to the respective container through a toggle locking latch 29. Each top face (see Fig.lB) is configured with several depressed locking locations 32 and it is seen that the at least two depressed locking locations are disposed behind one another along imaginary lines I, II and III (though not necessarily aligned).

[00200] Each such depressed locking location is in turn configured with a laterally projecting locking rib 36 extending from a rear portion of the depressed locking location 32 towards a front face of the container. The locking rib 36 has a flat top surface 38 substantially flush with a top surface of the respective lid L, and a slanting bottom surface 40. A front portion 46 of the depressed locking location 32 is slanted too, in the same orientation as bottom surface 40 (i.e. substantially parallel thereto).

[00201] Furthermore, the top face, namely lid L of the containers, is configured with at least one locking latch arresting location in the form of a recess 50 disposed at a front portion of the respective top face and configured with a slanted rear wall portion 52 and a right angled front wall portion 53.

[00202] A bottom face 54 of each container 22, 24, 26 and 28 is configured with several projecting portions 56, extending in register with the depressed locking locations 32, and it is seen that the at least two projecting portions 56 are disposed behind one another along the imaginary lines I, II and III (though not necessarily aligned).

[00203] Each projecting portions 56 is configured with a locking tongue 60 laterally projecting rearwards and having a slanted surface 62 corresponding with slanting surface 40 of locking rib 36. Also, a front portion 66 of the projecting portions 56 slants substantially parallel to the slanted surface 62 of the locking tongue 60.

[00204] It is essential that the at least two depressed locking locations 32 and the at least two projecting portions 56 be disposed behind one another (though not necessarily aligned), as exemplified by imaginary lines I, II and III (though not necessarily aligned).

[00205] A plunger-like locking latch 70 is disposed at a front portion of each container, said locking latch 70 disposed in register with the recesses 50 and configured with a slanting rear wall

portion 72 and a right angled front wall portion 74, corresponding with the sloping wall portions of the recesses 50. The locking latch 70 has an elongate finger engaging aperture 73 (Fig. 2A) accessible through an aperture 75 formed in register at a front wall face of the respective second container, said locking latch 70 being normally biased to project under force of coiled spring 71, such that the locking latch 70 is axially displaceable between a projecting, locked position and a temporary retracted position during transition into the locked position.

[00206] The locking latch 70 is typically single-handedly manipulable between its locking position and its releasing position, such that manipulation of the locking latch to disengage it from the locking latch arresting location 50 can be easily facilitated using one hand simultaneously with gripping the carrying handle 80. As seen in Figs. 1A-2C, manipulating the finger engaging aperture 73, being part of locking latch 70, is disposed opposite to and at finger-reach distance from the carrying handle 80 when the handle is at its carrying position tilted upwards. This enables a grab, release and go detachment of the second utility module from the first utility module in a simple single-handed operation.

[00207] When it is required to detachably attach a second container over a first container, the former is placed over the later (Fig. 3A), placing the projecting portions 56 within the depressed locking location 32 (Fig. 3B) with the locking tongues 60 engaging below and being gradually arrested by the respective locking ribs 36 arresting is obtained (Fig. 3C) until complete arresting is obtained (Fig. 3D). Simultaneously, as the locking tongues 60 arrest by the locking ribs 36, the locking latch 70 of the second container slides into the locking latch arresting location (recess 50) and finally snaps into locking engagement therewith. It is noted (Figs 4A to 4D) that first (Figs. 4B and 4C) the locking latch 70 displaces upwards against the biasing effect of spring 71, and when the second container reaches the final locking position over the first container, the locking latch 70 plunges into arresting position within the recess 50.

[00208] At the locked position the second container is attached over the top face of the first container, such that they can be moved as an integrated unit. Detaching of a second container from a first container is easily facilitated by unlocking, obtained by displacing the locking latch 70 upwards against the biasing effect of spring 71, whereby the second container can be displaced with respect to the first container and detached therefrom.

[00209] As further seen in Figs. 1A-4D, each of the containers 22, 24, 26 and 28, is configured at a front face thereof with a tiltable carrying handle 80, for carrying a respective container or the entire container assembly 20. Also seen, some of the containers can be configured with fender-like protectors 90 at their corners.

[00210] Further attention is now directed to Figs. 5A to 5E demonstrating examples of modularity of a container assembly according to the disclosure. Fig. 5A is a planner top view of a first container 94 and Figs. 5B to 5E illustrate second containers superimposed over the first container 94. In Fig. 5B a second container 96 is substantially as big as the first container 94, i.e. having the same footprint. In Fig. 5C a second container 98 is as wide as the first container 94, however narrower in depth, and disposed at a front portion of the first container. In Fig. 5D two second containers 99A and 99B are mounted over the first container 94 and occupy substantially the entire footprint thereof, whereby each of containers 99A and 99B is independently attachable and detachable from the first container 94, as exemplified hereinabove. In Fig. 5E two second containers 100A and 100B are positioned over the first container 94, occupying the entire width though narrower in depth and extending from a front portion of the first container 94.

[00211] Turning now to Figs. 6A to 6K, there are illustrated several examples of container assemblies, subassemblies and their components. Fig. 6A illustrates a disassembled container assembly collectively designated 104 and comprising a base container 106, a chest of drawers module 108 comprising three drawers, a tool caddy module 110, a compartmented storage module 112 and a half-sized compartmented storage module 114 (typically two of which). It is noted that the base container is configured for locomoting and comprises at a rear thereof wheels 116 and a telescopic handle 118.

[00212] As can be appreciated from Figs. 6B through 6D, various container assemblies are illustrated, the arrangement is such that in practice any module can constitute either a first container or a second container, as defined hereinabove (though it is more likely that base container 106 serves as a first container).

[00213] Figs. 6E and 6F illustrate a chest of drawers module 108, illustrated separately in Fig. 6E and mounted over a similar drawer module 108 in Fig. 6F. It is appreciated that the drawers of each module can be locked at their closed position to prevent spontaneous opening thereof

whilst carrying a module. Furthermore, each module 108 is configured with a pair of carrying handles 115 disposed at top side wall portions thereof, to facilitate carrying of the module.

[00214] In Fig. 6G there is illustrated a subassembly comprising a first container in the form of a tool caddy module 110 and second container in the form of a compartmented storage module 112 attached thereto, whilst the lid 119 of the first container is open facilitating access to the contents thereof.

[00215] Further attention is now directed to Figs. 7A to 16B, showing a third aspect of the disclosure, namely a utility module being a mobile carrier unit and comprising at least one carrier engagement surface, compatible for interlocking engagement in a detachable manner with a first engagement surface of a second utility module. For sake of example only, the second utility module exemplified in the annexed drawings is in the form of a utility container. It is however appreciated that the utility modules can be of any type, shape or size, as discussed hereinabove and as will be exemplified below. Accordingly, the term container unit as used in the following description denotes any type of a utility module, as discussed herein the specification.

[00216] Attention is first directed to Fig. 7A, illustrating a container carrier assembly generally designated 200 comprising a container unit 202 (utility module) mounted on top of a carrier unit 206. The carrier unit 206 is equipped with a telescopic manipulating handle 210, a pair of rear wheels 208 and a set of horizontally stabilizing support legs 212 at a front portion of the carrier unit 206. The carrier unit 206 and the container unit 202 are engaged in an interlocking engagement via their engagement surfaces, i.e. a carrier engagement surface 216 at a top face of the a carrier unit 206 (best seen in Fig. 8A), and the container unit's first engagement surface 220 (namely its bottom face; best seen in Figs. 8B and 8C). The container unit 202 is configured with yet a second engagement surface 226 (namely the container's top face), simulating the carrier engagement surface 216. The container unit 202 further comprises a locking mechanism 230 configured for arresting within a respective notch 231 at the carrier engagement surface 216, to thereby to prevent displacement and separation of the engagement surfaces 216 and 220 once they are interlocked, as later will be explained.

[00217] The carrier engagement surface 216 seen in greater detail in Fig. 8A, illustrates a top perspective view of a carrier unit 206 with the telescopic handle 210 in a retracted position. The

carrier engagement surface 216 comprises multiple carrier engaging elements 236, depressed from the surface, and designated for interlockingly receiving respective container unit's first engaging elements 240, projecting from the first engagement surface (bottom face) 220 of the container unit 202.

[00218] Each carrier engaging element 236, is a so-called female coupler and has a depressed locking location configured with at least one locking rib extending above a depressed surface and along a sliding path and having an open edge facing in a first sense. As seen in the drawings, it is generally constituted by a receiving recessed depression 244 in the carrier engagement surface 216, configured with a pair of facing locking ribs 248, forming the aforementioned recess. The locking ribs 248 extend substantially parallel to sliding path of the container unit 202 with respect to the carrier unit 206, said path (designated Pin Figs. 7A and 10B). Further noted, side walls 250 of depressions 244 are sloped in order to allow directing of a container unit's first engaging element 240, mounted upon it, to its interlocking position.

[00219] A corresponding coupler configured at the container unit is a so-called male coupler comprising a projecting locking location disposed in register with said depressed locking location and configured with at least one locking tongue extending along said engaging sliding path at a second sense, opposite to said first sense, and configured for arresting engagement at a space between said locking rib and depressed surface. As seen, a single container unit's engaging element 240 is generally constituted a downwardly projecting outwards protrusion 258, projecting from the bottom face 220 of the container 202.

[00220] In order to lock the container 202 over the carrier unit 206, upon placing the container 202 over the carrier engagement surface 216 of carrier unit 206 one must mount the container unit's first engaging elements 240 into the depressions 244 and then slide the container 202 along the sliding path P (i.e. towards the locking ribs 248) so that the engaging elements 240 engage below said projecting ribs/shoulders 248 and the engaging elements 240 are thus arrested at a space between said locking ribs and the depressed surface, as seen in Fig. 9C. Interlocking engagement of the container (or any other utility module) can be facilitated by a single male-female locking mechanism of the aforementioned type, or by a plurality of such locking mechanism, at any location over the carrier unit 206.

[00221] The shape and size of the locking members is modular as far as the depression 244 in the carrier engagement surface 216, can be single or double in size (e.g. 236 and 236A in Fig. 8A, respectively), so it is large enough to accommodate two container unit's first engaging elements 240, or two neighboring container unit's first engaging elements.

[00222] Locking/engaging and detaching of this configuration is similar to a single locking module.

[00223] The engagement and locking mechanism is modular in the sense that any first article can be easily and readily articulated to a surface of any second article, wherein the articulation is strong and firm (i.e. substantially motionless).

[00224] With further reference to Fig. 7B, there are illustrated two containers 202A and 202B articulated over one another, the arrangement being such that the bottom face of the intermediate container 202A serves for engaging with the top face of the carrier unit 206 and likewise, the top face of the intermediate container 202A serves for engaging with the bottom face of the top container 202B, as discussed herein above. The arrangement is such that each stage is lockingly secured by the locking mechanism 230, wherein each stage can be detached from the stage below upon releasing locking engagement of the respective locking mechanism 230.

[00225] The locking mechanism 230 is shown in further detail in Figs. 10A and 10B. The locking mechanism comprises a locking pin 231 normally biased by spring 233 such that a tip 235 projects from a bottom surface of the container 202 (see also Fig. 8B) and is configured for snap arresting within a respective notch 231 configured at the engagement surface 216 of the carrier unit 206 (seen also in Fig. 8A). The locking pin 231 is slidable within a race at the side wall of the container, and comprises a finger manipulating portion at 237 (accessible through an opening at the side wall of the container), for displacing the locking pin, against the biasing effect of spring 233, into its disengaged position, thus facilitating sliding the container along the path P into disengagement from the carrier unit (or respective other container or utility module). The carrier unit 206 is further configured at a bottom end, with a pair of stability supports 264 (Figs. 8A, 1lB), configured for supporting the carrier unit, with or without a container attached thereto, at an upright, i.e. vertical position, thus preventing it from tipping over, in particular with containers or any other utility module articulated thereto. Stability supports 264 can be,

according to a particular configuration, an extension of the telescopic handle 210, whereby the stability supports are functional as such only when the handle is fully contracted. However, in the illustration of Figs. 16A-16B the utility assembly 253 is maintained at its upright position owing to said stability supports 264 and further bearing over a side face 266 of the intermediate container 202A, being substantially flush with a bottom face of the stability supports 264.

[00226] With further reference to Figs. 12A to 12C there is illustrated a modification of articulation between a first utility module (container 300 in the particular example) and a second utility module (two work-piece supports 304 in the particular example). The container 300 is substantially similar to that illustrated in the previous examples, wherein the cover/lid 308 is configured with a plurality of female coupler members 310, each configured with a depressed locking location and a pair of locking ribs extending above the depressed surface and along a sliding path. The opposing locking ribs 312A and 312B have an open edge facing in a first sense (the introducing direction).

[00227] In the examples hereinbefore, engagement with a corresponding male coupler took place within the vicinity of a single coupling element, i.e. over two engaging ribs 312A and 312B of a single depressed locking location facing each other. However, in the example of Figs. 12A-12C engagement of the work-piece supports 304 takes place over two engaging ribs 312A and 312B of two neighboring depressed locking locations 308A and 308B. Accordingly, the male coupler of the two work-piece supports 304 is configured for arresting with the two engaging ribs 312A and 312B by two individual (separate) male couplers 316A and 316B, each configured for arresting one of the respective engaging ribs 312A and 312B. Arresting of the male projections 316 takes place as discussed before, by arresting below the respective engaging ribs, within the space at the depressed locking location. In spite of the relative narrow body structure of the work-piece supports 304, they are each configured with a locking mechanism 330, similar to locking mechanism 230 discussed hereinbefore.

[00228] Turning now to Figs. 13A-13D, 14A-14C, 15A-15B, 16A-16B, 17, 18A-18C, and 19-24, there are illustrated various examples of utility modules, utility assemblies and various configurations according to the disclosure.

[00229] Fig. 13A illustrates a utility module assembly generally designated 400, comprising a wheeled base container 402 supporting an intermediate container 404, bearing in turn a cooler box 406 and a power unit 408 disposed side by side over the intermediate container. At least the intermediate container 404 is configured at a bottom face thereof with a male-type coupling arrangement, for attachment over the cover of the base container, said cover configured with a respective female coupling arrangement. The cover of the intermediate container 404 is configured with a similar female coupling arrangement, and can thus engage with one the utility modules 406 and 408, each configured at its bottom face with a respective male-type coupling arrangement.

[00230] It is seen in Figs. 13B through 13D that the intermediate container 404 is fitted with a pivotal carrying handle 418 articulated at the top side walls thereof. The carrying handle has a thickness t and the arrangement is such that at the stowed/folded position (Figs. 13B, 13D) the handle 418 is received within a peripheral groove 422 extending over a top edge of the intermediate container 404 and a peripheral groove 424 extending at a bottom edge of the utility modules 408 and 406 (cooler box 406 and a power unit 408), such that the handle 418 does not constitute an obstacle in mounting and interlocking a utility module over another utility module. It is also seen that at least some of the utility modules are configured with side handles 428 serving both as carrying handles and as bumpers.

[00231] Figs. 14A to 14C illustrate a first utility module in the form of a container 430 supporting two detachable workpiece-piece supports 432 (attached as discussed herein before with reference to Figs. 12A-12C). Fig. 14C illustrates a utility module in the form of a work surface 436 configured with a vice race 438, so that a vice 440, or other workshop tools can be used. The workpiece-piece supports 432 are configured with a male type coupling having projecting locking locations 444 for engaging with respective female couplers.

[00232] In Figs. 15A and 15B there is illustrated a back-rack 450 being a substantially rigid platform having a carrying handle 451 and configured at one side thereof with a pair of adjustable shoulder harnesses 452, and an adjustable waist harness 454. The other side of the back-rack is configured as a universal utility mounting platform 458, configured with a plurality of attachment locations 460. In the illustrated example all attachment locations 460 are so-called female attachments (as discussed hereinabove in detail), however it is appreciated that the

attachment locations can just as well be male-type attachments, or a combination of male and female attachments. According to yet an example (not shown), one side of the carrying platform can be configured with male- type attachments, and an opposite side of the platform be configured with female-type attachments, wherein a used has the choice of attaching the platform to the harness system at an orientation of choice.

[00233] In Fig. 16A there is illustrated a utility module in the form of a wheeled carrying unit 464 (shown from a bottom side), similar to that disclosed in connection with Figs. 7A to 11B. The carrying unit 464 comprises a rigid platform 466 fitted at a top face thereof with a female/male attaching arrangement in accordance with the disclosure, such that any utility module according to the disclosure can be detachably attached thereto. Also provided is a telescopic manipulating handle 468 and a pair of wheels 466. The carrying unit can be fitted with a collapsible support plate configuring it into a pushcart (not shown).

[00234] Fig. 16B shows a utility assembly 276 comprising a wheeled base container 278 interlocked with a first intermediate container 280 mounted thereover (constituting a second stage of the assembly), and a second intermediate container 282 mounted thereover (constituting a third stage of the assembly 276), there being yet a fourth stage utility module container 284 mounted over the second intermediate container 282.

[00235] Whilst the second intermediate container 282 has a wider footprint than the first intermediate container 280, this does not constitute any difficulty as far as attaching it over the second intermediate container 282, and further, the top face of the second intermediate container 282 has a great surface suited for articulation thereof of several fourth stage utility modules (only one shown).

[00236] Fig. 17 shows a carrying bag 281 having soft side walls 283 (in the example illustrated made of fabric), however fitted with (integrally or detachable) an articulation platform base 284, said articulation platform made of a firm rigid material and is configured with four male-type coupling locations 288 of the type disclosed hereinabove. The carrying bag 281 has a carrying strap 290 useful for hand held or shoulder carrying of the bag.

[00237] Figure 18A shows a rigid coupling platform 300, configured with a plurality of female coupling locations (of the type disclosed herein) and further configured with bolt eyes 298 for securing to any desired surface, and carrying bars 313.

[00238] The coupling platform 300 can be attached for example to a truck bed 306 (Fig. 20), directly over the truck bed or over a cargo container attached to the truck. The coupling platform 300 can be attached to a wall, as in Fig. 18B, wherein a plurality of various utility modules can be articulated thereto. For example, utility modules can be an electric charger 315 of a power tool, a wall mounted sorting container 314, a hand tool rack 318 (Fig. 18C), a tool coupling adaptor 320 (Fig. 18C), etc.

[00239] In Fig. 19 there is illustrated a belt-mount 319 configured as a female coupler according to the disclosure, wherein a tool 321 or a bag/pouch configured with a male coupler can be detachably attached thereto.

[00240] In Fig. 21 there is illustrated a wall rack 326 comprising four utility modules in the form of articulation platforms 328 (mountable at different elevations about the wall supports 327) each configured for bearing and attaching thereto any utility module in accordance with the disclosure.

[00241] In Fig. 22 there is illustrated a mobile work stand 340 comprising a wheeled base 342 supporting two racks 344 with four utility modules in the form of articulation platforms 346 (mountable at different elevations about the wall supports 327) each configured for bearing and attaching thereto any utility module (e.g. containers 348) in accordance with the disclosure.

[00242] In Fig. 23 the utility module is in the form of a dolly 352 configured with wheels 354 and having a top surface configured with an array of female type couplings, as discussed.

[00243] In Fig. 24 there is illustrated a utility coupling platform 358 suited for articulation to any desired article (e.g. a bag, a tool, etc.). The utility coupling platform is configured at least at one face thereof with a male coupling locations 360 mimicking the coupling arrangement of the disclosure, rendering it suitable for articulation with a coupling system according to the disclosure.

WHAT IS CLAIMED IS:

1. A container assembly comprising:

a first container comprising:

a first coupler extending from a first face of the first container, the first coupler comprises two sidewalls and a rib, the two sidewalls project from a depressed surface of the first face, the rib extends from at least one of the two sidewalls; and

a latch recess; and

a second container comprising:

a second coupler extending from a second face of the second container, the second coupler comprises a tongue that is offset from the second face, the tongue of the second container is engageable with the rib of the first container, the second coupler defines a first planar surface generally parallel to the second face and that faces away from the second face, and wherein the second coupler defines a second planar surface generally parallel to the second face and that faces towards the second face; and

a latch coupled to the second container, the latch positionable in a locked position in which the latch prevents disengagement of the first container and the second container when the tongue and rib are engaged.

2. The container assembly of claim 1, wherein the first and second couplers on the first and second containers, respectively, engage when the first and second containers are slid along a sliding path defined by the rib and the tongue.

3. The container assembly of claim 1, wherein the first face of the first container comprises a top face of the first container, and wherein the second face of the second container comprises a bottom face of the second container.

4. The container assembly of claim 1, wherein the rib extends in a first direction that is parallel to a bottom face of the first container.

5. The container assembly of claim 4, wherein the tongue extends in a second direction opposite the first direction.

6. The container assembly of claim 1, wherein the two sidewalls of the first coupler project from the depressed surface away from each other, and wherein the two sidewalls of the first coupler project from the depressed surface at an obtuse angle with respect to the depressed surface.

7. The container assembly of claim 1, wherein the rib is perpendicular to at least one of the two sidewalls, and , wherein the rib is parallel to the depressed surface of the first face.

8. The container assembly of claim 1, wherein a width of the second container is half-size a width of the first container.

9. The container assembly of claim 1, wherein at least one of the latch and the second coupler are actuated between a first position extending above the second face and a second position not extending above the second face.

10. The container assembly of claim 1, wherein when the tongue and rib are engaged:

a first side wall of the two sidewalls of the first coupler and a second sidewall of the second coupler interface to restrict displacement between the first container and the second container in a third direction perpendicular to the first direction and parallel to the first face of the first container.

11. A first container configured to be removably coupled to a second container, the first container comprising:

a first face;

a second face; and

a first coupler that extends from the first face, wherein the first coupler comprises two sidewalls and a rib, the two sidewalls project from a depressed surface of the first face, the rib extends from at least one of the two sidewalls;

a second coupler that extends from the second face, wherein the second coupler comprises a tongue that is offset from the second face, wherein the second coupler defines a first planar surface generally parallel to the second face and that faces away from the second face, and wherein the second coupler defines a second planar surface generally parallel to the second face and that faces towards the second face;

a latch recess; and

a latch, the latch positionable in a locked position in which the latch interlocks with a second latch recess in the second container restricting displacement between the first container and the second container.

12. The first container of claim 11, wherein the first face comprises a top face of the first container, and wherein the second face comprises a bottom face of the first container.

13. The first container of claim 11, wherein the rib extends in a first direction that is parallel to a bottom face of the first container, and wherein the tongue extends in a second direction opposite the first direction.

14. The first container of claim 11, wherein the two sidewalls of the first coupler project from the depressed surface away from each other, and wherein the two sidewalls of the first coupler project from the depressed surface at an obtuse angle with respect to the depressed surface.

15. The first container of claim 11, wherein the rib is perpendicular to at least one of the two sidewalls, and wherein the rib is parallel to the depressed surface of the first face.

16. A container assembly comprising:

a first container comprising:

a first coupler extending from a first face of the first container, the first coupler comprises two sidewalls and a rib, the two sidewalls project from a depressed surface of the first face, the rib extends from at least one of the two sidewalls, and the rib extends in a first direction that is parallel to the first face of the first container; and

a latch recess; and

a second container comprising:

a second coupler extending from a second face of the second container, the second coupler comprises a tongue that is offset from the second face, the tongue extends in a second direction opposite the first direction, the tongue of the second container is engageable with the rib of the first container, the second coupler defines a first planar surface generally parallel to the second face and that faces away from the second face, and wherein the second coupler defines a second planar surface generally parallel to the second face and that faces towards the second face; and

a latch coupled to the second container, the latch positionable in a locked position in which the latch prevents disengagement of the first container and the second container when the tongue and rib are engaged.

17. The container assembly of claim 16, wherein when the tongue and rib are engaged:

a portion of the first coupler and a portion of the second coupler interface to restrict displacement between the first container and the second container in a third direction perpendicular to the first direction and parallel to the first face of the first container.

18. The container assembly of claim 16, wherein at least one of the latch and the second coupler actuate between a first position and a second position, wherein the at least one of the latch and the second coupler extends above the second face when in the first position.

19. The container assembly of claim 16, wherein the first face of the first container comprises a top face of the first container, and wherein the second face of the second container comprises a bottom face of the second container.

20. The container assembly of claim 1, wherein the two sidewalls of the first coupler project from the depressed surface at an obtuse angle with respect to the depressed surface.

ABSTRACT

The present disclosure concerns a coupling mechanism for detachably attaching two or more utility modules to one another, utility assembles, mobile carriers and other attachable modules and articles.

Electronic Patent Application Fee Transmittal

Application Number:	
Filing Date:	
Title of Invention:	Utility Assembly and Coupling Mechanism
First Named Inventor/Applicant Name:	Yaron Brunner
Filer:	Derek Howard Campbell/Sarah Sesterhenn-Lee
Attorney Docket Number:	066749-3309

Filed as Large Entity

Filing Fees for Track I Prioritized Examination - Nonprovisional Application under 35 USC 111(a)

Description	Fee Code	Quantity	Amount	Sub-Total in USD($)
Basic Filing:				
UTILITY APPLICATION FILING	1011	1	320	320
UTILITY SEARCH FEE	1111	1	700	700
UTILITY EXAMINATION FEE	1311	1	800	800
REQUEST FOR PRIORITIZED EXAMINATION	1817	1	4200	4200
Pages:				
Claims:				
Miscellaneous-Filing:				

Description	Fee Code	Quantity	Amount	Sub-Total in USD($)
PUBL. FEE- EARLY, VOLUNTARY, OR NORMAL	1504	1	0	0
PROCESSING FEE, EXCEPT PROV. APPLS.	1830	1	140	140
Petition:				
Patent-Appeals-and-Interference:				
Post-Allowance-and-Post-Issuance:				
Extension-of-Time:				
Miscellaneous:				
			Total in USD ($)	**6160**

Electronic Acknowledgement Receipt

EFS ID:	44378544
Application Number:	17536521
International Application Number:	
Confirmation Number:	7250
Title of Invention:	Utility Assembly and Coupling Mechanism
First Named Inventor/Applicant Name:	Yaron Brunner
Customer Number:	142078
Filer:	Derek Howard Campbell/Sarah Sesterhenn-Lee
Filer Authorized By:	Derek Howard Campbell
Attorney Docket Number:	066749-3309
Receipt Date:	29-NOV-2021
Filing Date:	
Time Stamp:	14:38:15
Application Type:	Utility under 35 USC 111(a)

Payment information:

Submitted with Payment	yes
Payment Type	DA
Payment was successfully received in RAM	$6160
RAM confirmation Number	E2021ASE39143383
Deposit Account	180882
Authorized User	Sarah Sesterhenn-Lee

The Director of the USPTO is hereby authorized to charge indicated fees and credit any overpayment as follows:

37 CFR 1.16 (National application filing, search, and examination fees)

37 CFR 1.17 (Patent application and reexamination processing fees)

37 CFR 1.19 (Document supply fees)

37 CFR 1.20 (Post Issuance fees)

37 CFR 1.21 (Miscellaneous fees and charges)

File Listing:

Document Number	Document Description	File Name	File Size(Bytes)/ Message Digest	Multi Part /.zip	Pages (if appl.)
1	Transmittal of New Application	066749-3309-Continuing_Application_Transmittal.pdf	69669 653156c14ee00ffd39ab76d93c6be7011df95cfa	no	2
Warnings:					
Information:					
2	Application Data Sheet	066749-3309_Application_Data_Sheet.pdf	109505 c1a0b03c7453a6c3d74124d50e8e85d4745cdba1	no	7
Warnings:					
Information:					
This is not an USPTO supplied ADS fillable form					
3	Drawings-only black and white line drawings	066749-3309_Drawings.pdf	3578561 7aaf5f1f6a92725f2326fb0237e603930a172c7c	no	48
Warnings:					
Information:					
4	Oath or Declaration filed	066749-3148_Executed_Declarations.pdf	521862 7f0579ea5c61d6ce779604249f4d3945c451eb7b	no	7
Warnings:					
Information:					
5	Power of Attorney	066749-3148_Power_of_Attorney.pdf	190119 0ef7cb6ebdccfbec668ea4ffa5ed812dc3fd99eb	no	2
Warnings:					
Information:					
6	Transmittal Letter	066749-3309-IDS_Transmittal.pdf	88483 7882edc5ab684a492962c1e6b73d75be9339baaf	no	2
Warnings:					

Information:					
7	Information Disclosure Statement (IDS) Form (SB08)	066749-3309-SB08.pdf	379722 fe18af42cc5f20849e3cd4ddb9ef26844f5f7c74	no	19
Warnings:					
Information:					
This is not an USPTO supplied IDS fillable form					
8	TrackOne Request	066749-3309_Track_1_Request_Form.pdf	127354 bc007edb2befe9c97f782a856ad1704950320482	no	2
Warnings:					
Information:					
9		066749-3309-Preliminary_Amendment.pdf	92195 2d5d854b130be3a885f1a34680dc0b9a1862dd05	yes	5

	Multipart Description/PDF files in .zip description		
	Document Description	**Start**	**End**
	Preliminary Amendment	1	1
	Claims	2	4
	Applicant Arguments/Remarks Made in an Amendment	5	5

Warnings:					
Information:					
10		Spec-RBVD_066749-3309.pdf	323816 3a6d805044d83d5ceb82a4819b8fd9213d027987	yes	42

	Multipart Description/PDF files in .zip description		
	Document Description	**Start**	**End**
	Specification	1	37
	Claims	38	41
	Abstract	42	42

Warnings:					
Information:					

11	Fee Worksheet (SB06)	fee-info.pdf	51276 147b8829586c34011d8e7b0e5fe1ed19f3df78f0	no	2

Warnings:

Information:

Total Files Size (in bytes):	5532562

This Acknowledgement Receipt evidences receipt on the noted date by the USPTO of the indicated documents, characterized by the applicant, and including page counts, where applicable. It serves as evidence of receipt similar to a Post Card, as described in MPEP 503.

New Applications Under 35 U.S.C. 111
If a new application is being filed and the application includes the necessary components for a filing date (see 37 CFR 1.53(b)-(d) and MPEP 506), a Filing Receipt (37 CFR 1.54) will be issued in due course and the date shown on this Acknowledgement Receipt will establish the filing date of the application.
National Stage of an International Application under 35 U.S.C. 371
If a timely submission to enter the national stage of an international application is compliant with the conditions of 35 U.S.C. 371 and other applicable requirements a Form PCT/DO/EO/903 indicating acceptance of the application as a national stage submission under 35 U.S.C. 371 will be issued in addition to the Filing Receipt, in due course.
New International Application Filed with the USPTO as a Receiving Office
If a new international application is being filed and the international application includes the necessary components for an international filing date (see PCT Article 11 and MPEP 1810), a Notification of the International Application Number and of the International Filing Date (Form PCT/RO/105) will be issued in due course, subject to prescriptions concerning national security, and the date shown on this Acknowledgement Receipt will establish the international filing date of the application.

PTO/AIA/82A (07-13)
Approved for use through 11/30/2014. OMB 0651-0051
U.S. Patent and Trademark Office; U.S. DEPARTMENT OF COMMERCE
Under the Paperwork Reduction Act of 1995, no persons are required to respond to a collection of information unless it displays a valid OMB control number.

TRANSMITTAL FOR POWER OF ATTORNEY TO ONE OR MORE REGISTERED PRACTITIONERS

NOTE: This form is to be submitted with the Power of Attorney by Applicant form (PTO/AIA/82B) to identify the application to which the Power of Attorney is directed, in accordance with 37 CFR 1.5, unless the application number and filing date are identified in the Power of Attorney by Applicant form. If neither form PTO/AIA/82A nor form PTO/AIA82B identifies the application to which the Power of Attorney is directed, the Power of Attorney will not be recognized in the application.

Application Number	To be determined
Filing Date	November 29, 2021
First Named Inventor	Yaron Brunner
Title	Utility Assembly and Coupling Mechanism
Art Unit	To be determined
Examiner Name	To be determined
Attorney Docket Number	066749-3309

SIGNATURE of Applicant or Patent Practitioner

Signature	/Derek H. Campbell/	Date (Optional)	November 29, 2021
Name	Derek H. Campbell	Registration Number	70,608
Title (if Applicant is a juristic entity)	Attorney for Applicant		
Applicant Name (if Applicant is a juristic entity)	Milwaukee Electric Tool Corporation		

NOTE: This form must be signed in accordance with 37 CFR 1.33. See 37 CFR 1.4(d) for signature requirements and certifications. If more than one applicant, use multiple forms.

☑ *Total of 1 forms are submitted.

This collection of information is required by 37 CFR 1.131, 1.32, and 1.33. The information is required to obtain or retain a benefit by the public which is to file (and by the USPTO to process) an application. Confidentiality is governed by 35 U.S.C. 122 and 37 CFR 1.11 and 1.14. This collection is estimated to take 3 minutes to complete, including gathering, preparing, and submitting the completed application form to the USPTO. Time will vary depending upon the individual case. Any comments on the amount of time you require to complete this form and/or suggestions for reducing this burden, should be sent to the Chief Information Officer, U.S. Patent and Trademark Office, U.S. Department of Commerce, P.O. Box 1450, Alexandria, VA 22313-1450. DO NOT SEND FEES OR COMPLETED FORMS TO THIS ADDRESS. **SEND TO: Commissioner for Patents, P.O. Box 1450, Alexandria, VA 22313-1450.**

If you need assistance in completing the form, call 1-800-PTO-9199 and select option 2.

PTO/AIA/80 (07-12)
Approved for use through 11/30/2014. OMB 0651-0035
U.S. Patent and Trademark Office; U.S DEPARTMENT OF COMMERCE
Under the Paperwork Reduction Act of 1995, no persons are required to respond to a collection of information unless it displays a valid OMB control number.

POWER OF ATTORNEY TO PROSECUTE APPLICATIONS BEFORE THE USPTO

I hereby revoke all previous powers of attorney given in the application identified in the attached statement under 37 CFR 3.73(c).

I hereby appoint:

[■] Practitioners associated with Customer Number: 142078

OR

[ ] Practitioner(s) named below (if more than ten patent practitioners are to be named, then a customer number must be used):

Name	Registration Number	Name	Registration Number

As attorney(s) or agent(s) to represent the undersigned before the United States Patent and Trademark Office (USPTO) in connection with any and all patent applications assigned only to the undersigned according to the USPTO assignment records or assignments documents attached to this form in accordance with 37 CFR 3.73(c).

Please change the correspondence address for the application identified in the attached statement under 37 CFR 3.73(c) to:

[■] The address associated with Customer Number: 142078

OR

[ ] Firm or Individual Name			
Address			
City		State	Zip
Country			
Telephone		Email	

Assignee Name and Address: Milwaukee Electric Tool Corporation
13135 West Lisbon Road
Brookfield, Wisconsin 53002

A copy of this form, together with a statement under 37 CFR 3.73(c) (Form PTO/AIA/96 or equivalent) is required to be Filed in each application in which this form is used. The statement under 37 CFR 3.73(c) may be completed by one of The practitioners appointed in this form, and must identify the application in which this Power of Attorney is to be filed.

SIGNATURE of Assignee of Record

The individual whose signature and title is supplied below is authorized to act on behalf of the assignee

Signature		Date	7-6-16
Name	Ty Staviski	Telephone	262-781-3600
Title	Vice President, Secretary and Treasurere		

This collection of information is required by 37 CFR 1.31, 1.32 and 1.33. The information is required to obtain or retain a benefit by the public which is to file (and by the USPTO to process) an application. Confidentiality is governed by 35 U.S.C. 122 and 37 CFR 1.11 and 1.14. This collection is estimated to take 3 minutes to complete, including gathering, preparing, and submitting the completed application form to the USPTO. Time will vary depending upon the individual case. Any comments on the amount of time you require to complete this form and/or suggestions for reducing this burden, should be sent to the Chief Information Officer, U.S. Patent and Trademark Office, U.S. Department of Commerce, P.O. Box 1450, Alexandria, VA 22313-1450. DO NOT SEND FEES OR COMPLETED FORMS TO THIS ADDRESS. **SEND TO: Commissioner for Patents, P.O. Box 1450, Alexandria, VA 22313-1450.**

If you need assistance in completing the form, call 1-800-PTO-9199 and select option 2.

IN THE UNITED STATES PATENT AND TRADEMARK OFFICE

Applicant: Milwaukee Electric Tool Corporation et al.

Title: Utility Assembly and Coupling Mechanism

Appl. No.: To Be Determined

Filing Date: November 29, 2021

Examiner: To Be Determined

Art Unit: To Be Determined

Confirmation Number: To Be Determined

INFORMATION DISCLOSURE STATEMENT UNDER 37 CFR §1.56

Mail Stop Amendment
Commissioner for Patents
P.O. Box 1450
Alexandria, VA 22313-1450

Submitted herewith on Form PTO/SB/08 is a listing of the documents cited by or submitted to the United States Patent & Trademark Office ("USPTO") in parent application Serial No. 17/391,904, filed August 2, 2021. As provided in 37 CFR §1.98(d), copies of documents previously cited in the above-identified patent application are not being provided since they were previously submitted to the USPTO in the above-identified patent application or in a prior related application. Otherwise, copies of each newly cited non-U.S. patent document (if any) and each newly cited non-patent document (if any) are being submitted to comply with the provisions of 37 CFR §1.97 and §1.98.

The submission of any document herewith, which is not a statutory bar, is not intended as an admission that such document constitutes prior art against the claims of the present application or that such document is considered material to patentability as defined in 37 CFR §1.56(b). Applicants do not waive any rights to take any action which would be appropriate to

antedate or otherwise remove as a competent reference any document which is determined to be a *prima facie* art reference against the claims of the present application.

TIMING OF THE DISCLOSURE

The listed documents are being submitted in compliance with 37 CFR §1.97(b)(1), within three (3) months of the filing date of the application.

RELEVANCE OF EACH DOCUMENT

The relevance of the foreign-language document is shown in the figures of the foreign-language documents and/or are described in the English-language abstract submitted in the parent application, where available. An English non-machine translation of the foreign-language document is not readily available. However, the absence of such translation does not relieve the PTO from its duty to consider the submitted foreign language document (37 CFR §1.98 and MPEP §609).

Applicants respectfully request that each listed document be considered by the Examiner and be made of record in the present application and that an initialed copy of Form PTO/SB/08 be returned in accordance with MPEP §609.

Although Applicant believes that no fee is required for this Request, the Commissioner is hereby authorized to charge any additional fees which may be required for this Request to Deposit Account No. 18-0882.

Respectfully submitted,

Date November 29, 2021

By /Derek H. Campbell/

Reinhart Boerner Van Deuren s.c.
Customer Number: 142078
Telephone: (414) 298-8374
Facsimile: (414) 298-8097

Derek H. Campbell
Attorney for Applicant
Registration No. 70,608

Under the Paperwork Reduction Act of 1995, no persons are required to respond to a collection of information unless it contains a valid OMB control number.

Substitute for form 1449/PTO

INFORMATION DISCLOSURE STATEMENT BY APPLICANT

Date Submitted: November 29, 2021

(use as many sheets as necessary)

Sheet	1	of	19

Complete if Known	
Application Number	To be determined
Filing Date	November 29, 2021
First Named Inventor	Yaron Brunner
Art Unit	To be determined
Examiner Name	To be determined
Attorney Docket Number	066749-3309

U.S. PATENT DOCUMENTS

Examiner Initials*	Cite No.[1]	Document Number Number-Kind Code[2] (*if known*)	Publication Date MM-DD-YYYY	Name of Patentee or Applicant of Cited Document	Pages, Columns, Lines, Where Relevant Passages or Relevant Figures Appear
	A1	495,537	04-18-1893	Westerman	
	A2	509,839	11-28-1893	Bowley	
	A3	1,081,378	12-16-1913	Freeman	
	A4	1,084,360	01-13-1914	Rahm	
	A5	2,042,387	05-26-1936	COBB DAVID F	
	A6	2,124,541	07-26-1938	Cassey	
	A7	2,430,200	11-04-1947	Wilson Winfred E.	
	A8	2,939,613	06-07-1960	Herman et al.	
	A9	2,970,358	02-07-1961	E. C. Elsner	
	A10	3,117,692	01-14-1964	Carpenter et al.	
	A11	3,225,865	12-28-1965	J. W. Downey	
	A12	3,423,786	01-28-1969	Arias, Jr. et al.	
	A13	3,424,334	01-28-1969	Goltz	
	A14	3,506,321	04-14-1970	Hampel	
	A15	3,514,170	05-26-1970	SHEWCHUK DONALD	
	A16	3,743,372	07-03-1973	Ruggerone; Guiseffe	
	A17	3,935,613	02-03-1976	Kaneko	
	A18	3,974,898	08-17-1976	Tullis et al.	
	A19	3,999,818	12-28-1976	Schankler	
	A20	4,122,925	10-31-1978	Schultheiss	
	A21	4,168,076	09-18-1979	Johnson	
	A22	4,243,279	01-06-1981	Ackeret	
	A23	4,673,070	06-16-1987	Ambal	
	A24	4,805,859	02-21-1989	Hudson; Don	
	A25	4,817,237	04-04-1989	Murphy	
	A26	4,929,973	05-29-1990	Nakatani	
	A27	4,971,201	11-20-1990	Sathre	
	A28	5,035,445	07-30-1991	Poulin	
	A29	5,098,235	03-24-1992	Svetlik et al.	
	A30	5,105,947	04-21-1992	Wise, Thomas W.	

Examiner Signature		Date Considered	

*EXAMINER: Initial if reference considered, whether or not citation is in conformance with MPEP 609. Draw line through citation if not in conformance and not considered. Include copy of this form with next communication to applicant. 1 Applicant's unique citation designation number (optional). 2 See Kinds Codes of USPTO Patent Documents at www.uspto.gov or MPEP 901.04. 3 Enter Office that issued the document, by the two-letter code (WIPO Standard ST.3). 4 For Japanese patent documents, the indication of the year of the reign of the Emperor must precede the serial number of the patent document. 5 Kind of document by the appropriate symbols as indicated on the document under WIPO Standard ST.16 if possible. 6 Applicant is to place a check mark here if English language Translation is attached.

This collection of information is required by 37 CFR 1.97 and 1.98. The information is required to obtain or retain a benefit by the public which is to file (and by the USPTO to process) an application. Confidentiality is governed by 35 U.S.C. 122 and 37 CFR 1.14. This collection is estimated to take 2 hours to complete, including gathering, preparing, and submitting the completed application form to the USPTO. Time will vary depending upon the individual case. Any comments on the amount of time you require to complete this form and/or suggestions for reducing this burden, should be sent to the Chief Information Officer, U.S. Patent and Trademark Office, P.O. Box 1450, Alexandria, VA 22313-1450. DO NOT SEND FEES OR COMPLETED FORMS TO THIS ADDRESS. **SEND TO: Commissioner for Patents, P.O. Box 1450, Alexandria, VA 22313-1450**.

If you need assistance in completing the form, call 1-800-PTO-9199 (1-800-786-9199) and select option 2.

Under the Paperwork Reduction Act of 1995, no persons are required to respond to a collection of information unless it contains a valid OMB control number.

Substitute for form 1449/PTO

INFORMATION DISCLOSURE STATEMENT BY APPLICANT

Date Submitted: November 29, 2021

(use as many sheets as necessary)

Sheet	2	of	19

Complete if Known	
Application Number	To be determined
Filing Date	November 29, 2021
First Named Inventor	Yaron Brunner
Art Unit	To be determined
Examiner Name	To be determined
Attorney Docket Number	066749-3309

U.S. PATENT DOCUMENTS

Examiner Initials*	Cite No.[1]	Document Number	Publication Date MM-DD-YYYY	Name of Patentee or Applicant of Cited Document	Pages, Columns, Lines, Where Relevant
	A31	5,240,264	08-31-1993	Williams	
	A32	5,282,554	02-01-1994	Thomas; Jan B.	
	A33	5,301,829	04-12-1994	Chrisco	
	A34	5,325,966	07-05-1994	Chang	
	A35	5,356,038	10-18-1994	Banks	
	A36	5,356,105	10-18-1994	Andrews	
	A37	5,375,709	12-27-1994	Petro	
	A38	5,429,235	07-04-1995	Chen	
	A39	5,429,260	07-041995	Vallers; Gary L.	
	A40	5,433,416	07-18-1995	Johnson	
	A41	5,538,213	07-23-1996	Brown Office Systems Inc.	
	A42	5,595,228	01-21-1997	Meisner et al.	
	A43	5,608,603	03-04-1997	Su	
	A44	5,622,296	04-22-1997	Pirhonen et al.	
	A45	5,628,443	05-13-1997	Deutsch	
	A46	5,653,366	08-05-1997	Liserre; Tony	
	A47	5,653,366	08-05-1997	Liserre	
	A48	5,664,292	09-09-1997	Chen	
	A49	5,775,046	07-07-1998	Fanger; David J.	
	A50	5,797,617	08-25-1998	Lin Shiou Chang	
	A51	5,850,996	12-22-1998	Liang	
	A52	5,890,613	04-06-1999	Williams; Warren Bret	
	A53	5,951,037	09-14-1999	Hsieh Hung-Ching	
	A54	5,957,421	09-28-1999	Barbour; Lee	
	A55	5,988,473	11-23-1999	Hagan et al.	
	A56	6,050,660	04-18-2000	Gurley	
	A57	6,082,539	07-04-2000	Lee	
	A58	6,082,687	07-04-2000	Kump et al.	
	A59	6,085,925	07-11-2000	Chung	
	A60	6,098,858	08-08-2000	Laugesen	
	A61	6,109,627	08-29-2000	Sung Haan Be	
	A62	6,176,559	01-23-2001	Tiramani et al.	

Examiner Signature		Date Considered	

*EXAMINER: Initial if reference considered, whether or not citation is in conformance with MPEP 609. Draw line through citation if not in conformance and not considered. Include copy of this form with next communication to applicant. 1 Applicant's unique citation designation number (optional). 2 See Kinds Codes of USPTO Patent Documents at www.uspto.gov or MPEP 901.04. 3 Enter Office that issued the document, by the two-letter code (WIPO Standard ST.3). 4 For Japanese patent documents, the indication of the year of the reign of the Emperor must precede the serial number of the patent document. 5 Kind of document by the appropriate symbols as indicated on the document under WIPO Standard ST.16 if possible. 6 Applicant is to place a check mark here if English language Translation is attached.

This collection of information is required by 37 CFR 1.97 and 1.98. The information is required to obtain or retain a benefit by the public which is to file (and by the USPTO to process) an application. Confidentiality is governed by 35 U.S.C. 122 and 37 CFR 1.14. This collection is estimated to take 2 hours to complete, including gathering, preparing, and submitting the completed application form to the USPTO. Time will vary depending upon the individual case. Any comments on the amount of time you require to complete this form and/or suggestions for reducing this burden, should be sent to the Chief Information Officer, U.S. Patent and Trademark Office, P.O. Box 1450, Alexandria, VA 22313-1450. DO NOT SEND FEES OR COMPLETED FORMS TO THIS ADDRESS. **SEND TO: Commissioner for Patents, P.O. Box 1450, Alexandria, VA 22313-1450**.

If you need assistance in completing the form, call 1-800-PTO-9199 (1-800-786-9199) and select option 2.

Under the Paperwork Reduction Act of 1995, no persons are required to respond to a collection of information unless it contains a valid OMB control number.

Substitute for form 1449/PTO

INFORMATION DISCLOSURE STATEMENT BY APPLICANT

Date Submitted: November 29, 2021

(use as many sheets as necessary)

Sheet	3	of	19

Complete if Known	
Application Number	To be determined
Filing Date	November 29, 2021
First Named Inventor	Yaron Brunner
Art Unit	To be determined
Examiner Name	To be determined
Attorney Docket Number	066749-3309

U.S. PATENT DOCUMENTS

Examiner Initials*	Cite No.[1]	Document Number	Publication Date MM-DD-YYYY	Name of Patentee or Applicant of Cited Document	Pages, Columns, Lines, Where Relevant
	A63	6,305,498	10-23-2001	Itzkovitch	
	A64	6,347,847	02-19-2002	Tiramani et al.	
	A65	6,367,631	04-09-2002	Steigerwald	
	A66	6,371,320	04-16-2002	Sagal	
	A67	6,371,424	04-16-2002	Shaw	
	A68	6,431,580	08-13-2002	Darren J. Kady	
	A69	6,547,347	04-15-2003	Saito; Yoshiyuki	
	A70	6,601,930	08-05-2003	Tiramani et al.	
	A71	6,619,772	09-16-2003	Dierbeck	
	A72	6,637,707	10-28-2003	Gates; George D.	
	A73	6,641,013	11-04-2003	Oise	
	A74	6,889,838	05-10-2005	Meier et al.	
	A75	6,945,546	09-20-2005	Edward G. Guirlinger	
	A76	6,948,691	09-27-2005	Brock et al.	
	A77	6,983,946	01-10-2006	Sullivan et al.	
	A78	7,044,484	05-16-2006	Wang	
	A79	7,066,475	06-27-2006	Bret E. Barnes	
	A80	7,077,372	07-18-2006	Moran	
	A81	7,090,085	08-15-2006	Vicendese et al.	
	A82	7,147,243	12-12-2006	Darren Kady	
	A83	7,152,752	12-26-2006	Kurtenbach	
	A84	7,172,164	02-06-2007	Fuelling; Richard A.	
	A85	7,219,969	05-22-2007	Bezzubov	
	A86	7,263,742	09-04-2007	Guido Valentini	
	A87	7,367,571	05-06-2008	Nichols	
	A88	7,503,569	03-17-2009	Duvigneau	
	A89	7,658,887	02-09-2010	Hovatter	
	A90	7,690,856	04-06-2010	Mortensen	
	A91	7,779,764	08-24-2010	NAIDU et al.	
	A92	7,780,026	08-24-2010	Zuckerman	
	A93	7,837,165	11-23-2010	Stone; Mark Andrew	
	A94	7,841,144	11-30-2010	Pervan; Darko	

Examiner Signature		Date Considered	

*EXAMINER: Initial if reference considered, whether or not citation is in conformance with MPEP 609. Draw line through citation if not in conformance and not considered. Include copy of this form with next communication to applicant. 1 Applicant's unique citation designation number (optional). 2 See Kinds Codes of USPTO Patent Documents at www.uspto.gov or MPEP 901.04. 3 Enter Office that issued the document, by the two-letter code (WIPO Standard ST.3). 4 For Japanese patent documents, the indication of the year of the reign of the Emperor must precede the serial number of the patent document. 5 Kind of document by the appropriate symbols as indicated on the document under WIPO Standard ST.16 if possible. 6 Applicant is to place a check mark here if English language Translation is attached.

This collection of information is required by 37 CFR 1.97 and 1.98. The information is required to obtain or retain a benefit by the public which is to file (and by the USPTO to process) an application. Confidentiality is governed by 35 U.S.C. 122 and 37 CFR 1.14. This collection is estimated to take 2 hours to complete, including gathering, preparing, and submitting the completed application form to the USPTO. Time will vary depending upon the individual case. Any comments on the amount of time you require to complete this form and/or suggestions for reducing this burden, should be sent to the Chief Information Officer, U.S. Patent and Trademark Office, P.O. Box 1450, Alexandria, VA 22313-1450. DO NOT SEND FEES OR COMPLETED FORMS TO THIS ADDRESS. **SEND TO: Commissioner for Patents, P.O. Box 1450, Alexandria, VA 22313-1450**.

If you need assistance in completing the form, call 1-800-PTO-9199 (1-800-786-9199) and select option 2.

Under the Paperwork Reduction Act of 1995, no persons are required to respond to a collection of information unless it contains a valid OMB control number.

Substitute for form 1449/PTO

INFORMATION DISCLOSURE STATEMENT BY APPLICANT

Date Submitted: November 29, 2021

(use as many sheets as necessary)

Sheet	4	of	19

Complete if Known	
Application Number	To be determined
Filing Date	November 29, 2021
First Named Inventor	Yaron Brunner
Art Unit	To be determined
Examiner Name	To be determined
Attorney Docket Number	066749-3309

U.S. PATENT DOCUMENTS

Examiner Initials*	Cite No.[1]	Document Number	Publication Date MM-DD-YYYY	Name of Patentee or Applicant of Cited Document	Pages, Columns, Lines, Where Relevant
	A95	8,028,845	10-04-2011	Himes	
	A96	8,132,819	03-13-2012	Landau; Eitan	
	A97	8,177,463	05-15-2012	Walker; Peter J	
	A98	8,191,910	06-05-2012	Landau et al.	
	A99	8,448,829	05-28-2013	Watanabe; Takata	
	A100	8,454,033	06-04-2013	Tsai	
	A101	8,459,495	06-11-2013	Koenig; Andreas	
	A102	8,505,729	08-13-2013	Sosnovsky et al.	
	A103	8,567,796	10-29-2013	Bar-Erez et al.	
	A104	8,602,217	12-10-2013	Sosnovsky et al.	
	A105	8,640,913	02-04-2014	Berendes	
	A106	8,677,661	03-25-2014	Michels; Markus	
	A107	8,689,396	04-08-2014	Melvin E. Wolfe	
	A108	8,714,355	05-06-2014	Huang	
	A109	8,813,960	08-26-2014	Fjelland; Douglas J.	
	A110	8,851,282	10-07-2014	Brunner	
	A111	8,875,888	11-04-2014	Koenig; Andreas	
	A112	8,925,752	01-06-2015	Smith	
	A113	8,979,100	03-17-2015	Bensman et al.	
	A114	8,985,922	03-24-2015	Neumann	
	A115	9,132,543	09-15-2015	Bar-Erez; Sharon	
	A116	9,506,489	11-29-2016	Ko; Kenneth H.	
	A117	9,511,491	12-06-2016	Brunner	
	A118	9,551,367	01-24-2017	Shieh	
	A119	9,566,990	02-14-2017	Bar-Erez; Sharon	
	A120	9,616,562	04-11-2017	Hoppe; Christopher S.	
	A121	9,643,629	05-09-2017	The Stanley Works Israel Ltd.	
	A122	9,701,443	07-11-2017	Wang; Tzu-Chien	
	A123	9,725,209	08-08-2017	Ben-Gigi	
	A124	9,850,029	12-26-2017	Brunner	
	A125	9,872,562	01-23-2018	Brunner; Varon	

Examiner Signature		Date Considered	

*EXAMINER: Initial if reference considered, whether or not citation is in conformance with MPEP 609. Draw line through citation if not in conformance and not considered. Include copy of this form with next communication to applicant. 1 Applicant's unique citation designation number (optional). 2 See Kinds Codes of USPTO Patent Documents at www.uspto.gov or MPEP 901.04. 3 Enter Office that issued the document, by the two-letter code (WIPO Standard ST.3). 4 For Japanese patent documents, the indication of the year of the reign of the Emperor must precede the serial number of the patent document. 5 Kind of document by the appropriate symbols as indicated on the document under WIPO Standard ST.16 if possible. 6 Applicant is to place a check mark here if English language Translation is attached.

This collection of information is required by 37 CFR 1.97 and 1.98. The information is required to obtain or retain a benefit by the public which is to file (and by the USPTO to process) an application. Confidentiality is governed by 35 U.S.C. 122 and 37 CFR 1.14. This collection is estimated to take 2 hours to complete, including gathering, preparing, and submitting the completed application form to the USPTO. Time will vary depending upon the individual case. Any comments on the amount of time you require to complete this form and/or suggestions for reducing this burden, should be sent to the Chief Information Officer, U.S. Patent and Trademark Office, P.O. Box 1450, Alexandria, VA 22313-1450. DO NOT SEND FEES OR COMPLETED FORMS TO THIS ADDRESS. **SEND TO: Commissioner for Patents, P.O. Box 1450, Alexandria, VA 22313-1450**.

If you need assistance in completing the form, call 1-800-PTO-9199 (1-800-786-9199) and select option 2.

Under the Paperwork Reduction Act of 1995, no persons are required to respond to a collection of information unless it contains a valid OMB control number.

Substitute for form 1449/PTO

INFORMATION DISCLOSURE STATEMENT BY APPLICANT

Date Submitted: November 29, 2021

(use as many sheets as necessary)

Sheet	5	of	19

Complete if Known	
Application Number	To be determined
Filing Date	November 29, 2021
First Named Inventor	Yaron Brunner
Art Unit	To be determined
Examiner Name	To be determined
Attorney Docket Number	066749-3309

U.S. PATENT DOCUMENTS

Examiner Initials*	Cite No.[1]	Document Number	Publication Date MM-DD-YYYY	Name of Patentee or Applicant of Cited Document	Pages, Columns, Lines, Where Relevant
	A126	9,888,752	02-13-2018	Den Boer et al.	
	A127	10,106,180	10-23-2018	Bar-Erez et al.	
	A128	10,222,172	03-05-2019	Melville	
	A129	10,434,638	10-08-2019	Tsai	
	A130	10,583,962	03-10-2020	Brunner et al.	
	A131	10,603,783	03-31-2020	Brocket et al.	
	A132	10,703,534	07-07-2020	Brunner et al.	
	A133	10,750,833	08-25-2020	Burchia	
	A134	10,758,065	09-01-2020	Penalver, Jr.; John	
	A135	10,793,172	10-06-2020	Brunner	
	A136	10,829,269	11-10-2020	Gonitianer et al.	
	A137	10,933,501	03-02-2021	Bisson	
	A138	10,933,501	03-02-2021	Bisson	
	A139	10,962,218	03-30-2021	Plato et al.	
	A140	10,981,696	04-20-2021	Brunner et al.	
	A141	11,008,136	05-18-2021	Brunner et al.	
	A142	11,059,631	07-13-2021	Brunner et al.	
	A143	2002/0000440	01-03-2002	Sagal et al.	
	A144	2002/0125072	09-12-2002	Levy	
	A145	2002/0171228	11-21-2002	Kady	
	A146	2003/0094392	05-22-2003	Meier et al.	
	A147	2003/0094393	05-22-2003	Sahm, Ill	
	A148	2003/0115715	06-26-2003	Guido Valentini	
	A149	2003/0146589	08-07-2003	Jarko et al.	
	A150	2003/0184034	10-02-2003	Pfeiffer	
	A151	2003/0205877	11-06-2003	Verna et al.	
	A152	2004/0103494	06-03-2004	Valentini	
	A153	2004/0195793	10-07-2004	Sullivan, Hugh C., et al.	
	A154	2004/0206656	10-21-2004	Dubois et al.	
	A155	2005/0015928	01-27-2005	Arsenault et al.	
	A156	2005/0062244	03-24-2005	Guirlinger	
	A157	2005/0104308	05-19-2005	Barnes	

Examiner Signature		Date Considered	

*EXAMINER: Initial if reference considered, whether or not citation is in conformance with MPEP 609. Draw line through citation if not in conformance and not considered. Include copy of this form with next communication to applicant. 1 Applicant's unique citation designation number (optional). 2 See Kinds Codes of USPTO Patent Documents at www.uspto.gov or MPEP 901.04. 3 Enter Office that issued the document, by the two-letter code (WIPO Standard ST.3). 4 For Japanese patent documents, the indication of the year of the reign of the Emperor must precede the serial number of the patent document. 5 Kind of document by the appropriate symbols as indicated on the document under WIPO Standard ST.16 if possible. 6 Applicant is to place a check mark here if English language Translation is attached.

This collection of information is required by 37 CFR 1.97 and 1.98. The information is required to obtain or retain a benefit by the public which is to file (and by the USPTO to process) an application. Confidentiality is governed by 35 U.S.C. 122 and 37 CFR 1.14. This collection is estimated to take 2 hours to complete, including gathering, preparing, and submitting the completed application form to the USPTO. Time will vary depending upon the individual case. Any comments on the amount of time you require to complete this form and/or suggestions for reducing this burden, should be sent to the Chief Information Officer, U.S. Patent and Trademark Office, P.O. Box 1450, Alexandria, VA 22313-1450. DO NOT SEND FEES OR COMPLETED FORMS TO THIS ADDRESS. **SEND TO: Commissioner for Patents, P.O. Box 1450, Alexandria, VA 22313-1450**.

If you need assistance in completing the form, call 1-800-PTO-9199 (1-800-786-9199) and select option 2.

Under the Paperwork Reduction Act of 1995, no persons are required to respond to a collection of information unless it contains a valid OMB control number.

Substitute for form 1449/PTO

INFORMATION DISCLOSURE STATEMENT BY APPLICANT

Date Submitted: November 29, 2021

(use as many sheets as necessary)

Sheet	6	of	19

Complete if Known	
Application Number	To be determined
Filing Date	November 29, 2021
First Named Inventor	Yaron Brunner
Art Unit	To be determined
Examiner Name	To be determined
Attorney Docket Number	066749-3309

U.S. PATENT DOCUMENTS

Examiner Initials*	Cite No.[1]	Document Number	Publication Date MM-DD-YYYY	Name of Patentee or Applicant of Cited Document	Pages, Columns, Lines, Where Relevant
	A158	2005/0139745	06-30-2005	Liao, Chi-Cheng	
	A159	2005/0242144	11-03-2005	Panosian, Michael	
	A160	2006/0006770	01-12-2006	Valentini	
	A161	2006/0027475	02-09-2006	Gleason et al.	
	A162	2006/0038367	02-23-2006	Ferraro; Frank A.	
	A163	2006/0076261	04-13-2006	Kurtenbach	
	A164	2006/0119060	06-08-2006	Sullivan et al.	
	A165	2006/0186624	08-24-2006	Kady, Darren	
	A166	2006/0254946	11-16-2006	Becklin	
	A167	2007/0068757	03-29-2007	Tan	
	A168	2007/0090616	04-26-2007	Tompkins	
	A169	2007/0145700	06-28-2007	Ambrose et al.	
	A170	2007/0194543	08-23-2007	Duvigneau	
	A171	2008/0060953	03-13-2008	Ghassan	
	A172	2008/0104921	05-08-2008	Pervan; Darko	
	A173	2008/0115312	05-22-2008	DiPasquale et al.	
	A174	2008/0121547	05-29-2008	Dur et al.	
	A175	2008/0134607	06-12-2008	Pervan; Darko	
	A176	2008/0169739	07-17-2008	Goldenberg; Ruth	
	A177	2008/0271280	11-06-2008	FUCHS FRANK et al.	
	A178	2008/0277221	11-13-2008	Josefson; Mark L.	
	A179	2008/0296443	12-04-2008	Lunitz; Barbara	
	A180	2008/0308369	12-18-2008	Louis; Robert D.	
	A181	2009/0026901	01-29-2009	Nies, III et al.	
	A182	2009/0071990	03-19-2009	Jardine et al.	
	A183	2009/0127146	05-21-2009	Krebs; Kolja	
	A184	2009/0145790	06-11-2009	Panosian; Michael Harmik	
	A185	2009/0145866	06-11-2009	Panosian et al.	
	A186	2009/0145913	06-11-2009	Panosian et al.	
	A187	2009/0178946	07-16-2009	Patstone et al.	
	A188	2009/0236482	09-24-2009	SS3 Storage Systems LLC	
	A189	2010/0052276	03-04-2010	Brunner	

Examiner Signature		Date Considered	

*EXAMINER: Initial if reference considered, whether or not citation is in conformance with MPEP 609. Draw line through citation if not in conformance and not considered. Include copy of this form with next communication to applicant. 1 Applicant's unique citation designation number (optional). 2 See Kinds Codes of USPTO Patent Documents at www.uspto.gov or MPEP 901.04. 3 Enter Office that issued the document, by the two-letter code (WIPO Standard ST.3). 4 For Japanese patent documents, the indication of the year of the reign of the Emperor must precede the serial number of the patent document. 5 Kind of document by the appropriate symbols as indicated on the document under WIPO Standard ST.16 if possible. 6 Applicant is to place a check mark here if English language Translation is attached.

This collection of information is required by 37 CFR 1.97 and 1.98. The information is required to obtain or retain a benefit by the public which is to file (and by the USPTO to process) an application. Confidentiality is governed by 35 U.S.C. 122 and 37 CFR 1.14. This collection is estimated to take 2 hours to complete, including gathering, preparing, and submitting the completed application form to the USPTO. Time will vary depending upon the individual case. Any comments on the amount of time you require to complete this form and/or suggestions for reducing this burden, should be sent to the Chief Information Officer, U.S. Patent and Trademark Office, P.O. Box 1450, Alexandria, VA 22313-1450. DO NOT SEND FEES OR COMPLETED FORMS TO THIS ADDRESS. **SEND TO: Commissioner for Patents, P.O. Box 1450, Alexandria, VA 22313-1450**.

If you need assistance in completing the form, call 1-800-PTO-9199 (1-800-786-9199) and select option 2.

Under the Paperwork Reduction Act of 1995, no persons are required to respond to a collection of information unless it contains a valid OMB control number.

Substitute for form 1449/PTO

INFORMATION DISCLOSURE STATEMENT BY APPLICANT

Date Submitted: November 29, 2021

(use as many sheets as necessary)

Sheet	7	of	19

Complete if Known	
Application Number	To be determined
Filing Date	November 29, 2021
First Named Inventor	Yaron Brunner
Art Unit	To be determined
Examiner Name	To be determined
Attorney Docket Number	066749-3309

U.S. PATENT DOCUMENTS

Examiner Initials*	Cite No.[1]	Document Number	Publication Date MM-DD-YYYY	Name of Patentee or Applicant of Cited Document	Pages, Columns, Lines, Where Relevant
	A190	2010/0139566	06-10-2010	Lopuszanski, Michel	
	A191	2010/0147642	06-17-2010	Andochick; Scott E.	
	A192	2010/0176261	07-15-2010	Chen et al.	
	A193	2010/0219193	09-02-2010	Becklin	
	A194	2010/0224528	09-09-2010	Madsen	
	A195	2011/0073516	03-31-2011	Zelinskiy; Konstantin	
	A196	2011/0139665	06-16-2011	Madsen	
	A197	2011/0139777	06-16-2011	Sosnovsky et al.	
	A198	2011/0155613	06-30-2011	Koenig, Andreas et al.	
	A199	2011/017 4939	07-21-2013	Parts Express International Inc.	
	A200	2011/0181008	07-28-2011	BENSMAN;MARK	
	A201	2011/0220531	09-15-2011	Meether et al.	
	A202	2012/0074022	03-29-2012	McTavish et al.	
	A203	2012/0074158	03-29-2012	LAFLEUR; ANDRE	
	A204	2012/0152944	06-21-2012	Vilkomirski et al.	
	A205	2012/0160886	06-28-2012	Henny Paul et al.	
	A206	2012/0180250	07-19-2012	KAERCHER GMBH AND CO ALFRED KG	
	A207	2012/0207571	08-16-2012	Scott, Charles Shay	
	A208	2012/0292213	11-22-2012	Brunner	
	A209	2012/0326406	12-27-2012	LIFSHITZ; Omri	
	A210	2013/0024468	01-24-2013	Kocsis, Susan C.	
	A211	2013/0031731	02-07-2013	KAERCHER GMBH AND CO ALFRED KG	
	A212	2013/0031732	02-07-2013	KAERCHER GMBH AND CO ALFRED KG	
	A213	2013/0068903	03-21-2013	Peerless Ind Inc.	
	A214	2013/0121783	05-16-2013	Kelly; Thomas P.	
	A215	2013/0127129	05-23-2013	Bensman, Mark et al.	
	A216	2013/0154218	06-20-2013	TIILIKAINEN	
	A217	2013/0223971	08-29-2013	Grace IV, Robert W.	

Examiner Signature		Date Considered	

*EXAMINER: Initial if reference considered, whether or not citation is in conformance with MPEP 609. Draw line through citation if not in conformance and not considered. Include copy of this form with next communication to applicant. 1 Applicant's unique citation designation number (optional). 2 See Kinds Codes of USPTO Patent Documents at www.uspto.gov or MPEP 901.04. 3 Enter Office that issued the document, by the two-letter code (WIPO Standard ST.3). 4 For Japanese patent documents, the indication of the year of the reign of the Emperor must precede the serial number of the patent document. 5 Kind of document by the appropriate symbols as indicated on the document under WIPO Standard ST.16 if possible. 6 Applicant is to place a check mark here if English language Translation is attached.

This collection of information is required by 37 CFR 1.97 and 1.98. The information is required to obtain or retain a benefit by the public which is to file (and by the USPTO to process) an application. Confidentiality is governed by 35 U.S.C. 122 and 37 CFR 1.14. This collection is estimated to take 2 hours to complete, including gathering, preparing, and submitting the completed application form to the USPTO. Time will vary depending upon the individual case. Any comments on the amount of time you require to complete this form and/or suggestions for reducing this burden, should be sent to the Chief Information Officer, U.S. Patent and Trademark Office, P.O. Box 1450, Alexandria, VA 22313-1450. DO NOT SEND FEES OR COMPLETED FORMS TO THIS ADDRESS. **SEND TO: Commissioner for Patents, P.O. Box 1450, Alexandria, VA 22313-1450**.

If you need assistance in completing the form, call 1-800-PTO-9199 (1-800-786-9199) and select option 2.

Under the Paperwork Reduction Act of 1995, no persons are required to respond to a collection of information unless it contains a valid OMB control number.

Substitute for form 1449/PTO

INFORMATION DISCLOSURE STATEMENT BY APPLICANT

Date Submitted: November 29, 2021

(use as many sheets as necessary)

Sheet	8	of	19

Complete if Known	
Application Number	To be determined
Filing Date	November 29, 2021
First Named Inventor	Yaron Brunner
Art Unit	To be determined
Examiner Name	To be determined
Attorney Docket Number	066749-3309

U.S. PATENT DOCUMENTS

Examiner Initials*	Cite No.[1]	Document Number	Publication Date MM-DD-YYYY	Name of Patentee or Applicant of Cited Document	Pages, Columns, Lines, Where Relevant
	A218	2013/146551	06-13-2013	Electrolux Home Prod Inc.	
	A219	2014/0069832	03-13-2014	Roehm	
	A220	2014/0076759	03-20-2014	ROEHM et al.	
	A221	2014/0123478	05-08-2014	Gylander et al.	
	A222	2014/0161518	06-12-2014	KO	
	A223	2014/0166516	06-19-2014	Martinez; Mark R.	
	A224	2015/0014949	01-15-2015	Dittman	
	A225	2015/0034515	02-05-2015	Monyak et al.	
	A226	2015/0151427	06-04-2015	Ben-Gigi	
	A227	2015/0274362	10-01-2015	CHRISTOPHER et al.	
	A228	2015/0310842	10-29-2015	Coburn et al.	
	A229	2015/0376917	12-31-2015	Brunner	
	A230	2016/0023349	01-28-2016	Milwaukee Electric Tool Corporation	
	A231	2016/0130034	05-12-2016	Kuhls; Timo	
	A232	2016/0144500	05-26-2016	CHEN; KUN-CHEN	
	A233	2016/0168880	06-16-2016	Phelan; Matthew	
	A234	2016/0221177	08-04-2016	Reinhart	
	A235	2017/0121056	05-04-2017	Wang; Tzu-Chien	
	A236	2017/0138382	05-18-2017	Ko	
	A237	2017/0165828	06-15-2017	Festool GmbH	
	A238	2017/0166352	06-15-2017	Hoppe; Christopher S.	
	A239	2017/0174392	06-22-2017	De Loynes	
	A240	2017/0217464	08-03-2017	Bar-erez et al.	
	A241	2017/0239808	08-24-2017	Hoppe; Christopher S.	
	A242	2017/0257958	09-07-2017	The Stanley Works Israel Ltd.	
	A243	2017/0266804	09-21-2017	Kinskey	
	A244	2017/0318927	11-09-2017	Krause et al.	
	A245	2017/0349013	12-07-2017	GRONHOLM	
	A246	2018/0044059	02-15-2018	BRUNNER; Varon	

Examiner Signature		Date Considered	

*EXAMINER: Initial if reference considered, whether or not citation is in conformance with MPEP 609. Draw line through citation if not in conformance and not considered. Include copy of this form with next communication to applicant. 1 Applicant's unique citation designation number (optional). 2 See Kinds Codes of USPTO Patent Documents at www.uspto.gov or MPEP 901.04. 3 Enter Office that issued the document, by the two-letter code (WIPO Standard ST.3). 4 For Japanese patent documents, the indication of the year of the reign of the Emperor must precede the serial number of the patent document. 5 Kind of document by the appropriate symbols as indicated on the document under WIPO Standard ST.16 if possible. 6 Applicant is to place a check mark here if English language Translation is attached.

This collection of information is required by 37 CFR 1.97 and 1.98. The information is required to obtain or retain a benefit by the public which is to file (and by the USPTO to process) an application. Confidentiality is governed by 35 U.S.C. 122 and 37 CFR 1.14. This collection is estimated to take 2 hours to complete, including gathering, preparing, and submitting the completed application form to the USPTO. Time will vary depending upon the individual case. Any comments on the amount of time you require to complete this form and/or suggestions for reducing this burden, should be sent to the Chief Information Officer, U.S. Patent and Trademark Office, P.O. Box 1450, Alexandria, VA 22313-1450. DO NOT SEND FEES OR COMPLETED FORMS TO THIS ADDRESS. **SEND TO: Commissioner for Patents, P.O. Box 1450, Alexandria, VA 22313-1450**.

If you need assistance in completing the form, call 1-800-PTO-9199 (1-800-786-9199) and select option 2.

Under the Paperwork Reduction Act of 1995, no persons are required to respond to a collection of information unless it contains a valid OMB control number.

Substitute for form 1449/PTO

INFORMATION DISCLOSURE STATEMENT BY APPLICANT

Date Submitted: November 29, 2021

(use as many sheets as necessary)

Sheet	9	of	19

Complete if Known	
Application Number	To be determined
Filing Date	November 29, 2021
First Named Inventor	Yaron Brunner
Art Unit	To be determined
Examiner Name	To be determined
Attorney Docket Number	066749-3309

U.S. PATENT DOCUMENTS

Examiner Initials*	Cite No.[1]	Document Number	Publication Date MM-DD-YYYY	Name of Patentee or Applicant of Cited Document	Pages, Columns, Lines, Where Relevant
	A247	2018/0099405	04-12-2018	Reinhart	
	A248	2018/0127007	05-10-2018	Kravchenko	
	A249	2018/0153312	06-07-2018	Buck James et al.	
	A250	2018/0161975	06-14-2018	Brunner; Varon	
	A251	2018/0186513	07-05-2018	Brunner	
	A252	2018/0213934	08-02-2018	Wolle et al.	
	A253	2018/0220758	08-09-2018	Rothenberger AG	
	A254	2018/0229889	08-16-2018	Li	
	A255	2018/0290288	10-11-2018	BRUNNER; Varon	
	A256	2019/0001482	01-03-2019	Wolle et al.	
	A257	2019/0002004	01-03-2019	BRUNNER; Varon	
	A258	2019/0031222	01-31-2019	TAKVAR et al.	
	A259	2019/0039781	02-07-2019	Kogel	
	A260	2019/0106244	04-11-2019	Brunner et al.	
	A261	2019/0168376	06-06-2019	BROCKET; Stephen	
	A262	2019/0225371	07-25-2019	Hoppe et al.	
	A263	2020/0029543	01-30-2020	Householder	
	A264	2020/0055534	02-20-2020	HASSELL	
	A265	2020/0147781	05-14-2020	Squiers et al.	
	A266	2020/0165036	05-28-2020	Squiers et al.	
	A267	2020/0243925	07-30-2020	Polakowski et al.	
	A268	2020/0299027	09-24-2020	Brunner et al.	
	A269	2020/0346819	11-05-2020	Kogel et al.	
	A270	2021/0025706	01-28-2021	Millane	
	A271	2021/0031975	02-04-2021	Brunner at el.	
	A272	2021/0039831	02-11-2021	Brunner at el.	
	A273	2021/0039831	02-11-2021	Brunner et al.	
	A274	2021/0155373	05-27-2021	Cai	
	A275	2021/0187725	06-24-2021	Brunner	
	A276	2021/0267368	09-02-2021	Bruins	
	A277	D232,798	09-17-1974	Roche et al.	
	A278	D285,986	10-07-1986	Huang	

Examiner Signature		Date Considered	

*EXAMINER: Initial if reference considered, whether or not citation is in conformance with MPEP 609. Draw line through citation if not in conformance and not considered. Include copy of this form with next communication to applicant. 1 Applicant's unique citation designation number (optional). 2 See Kinds Codes of USPTO Patent Documents at www.uspto.gov or MPEP 901.04. 3 Enter Office that issued the document, by the two-letter code (WIPO Standard ST.3). 4 For Japanese patent documents, the indication of the year of the reign of the Emperor must precede the serial number of the patent document. 5 Kind of document by the appropriate symbols as indicated on the document under WIPO Standard ST.16 if possible. 6 Applicant is to place a check mark here if English language Translation is attached.

This collection of information is required by 37 CFR 1.97 and 1.98. The information is required to obtain or retain a benefit by the public which is to file (and by the USPTO to process) an application. Confidentiality is governed by 35 U.S.C. 122 and 37 CFR 1.14. This collection is estimated to take 2 hours to complete, including gathering, preparing, and submitting the completed application form to the USPTO. Time will vary depending upon the individual case. Any comments on the amount of time you require to complete this form and/or suggestions for reducing this burden, should be sent to the Chief Information Officer, U.S. Patent and Trademark Office, P.O. Box 1450, Alexandria, VA 22313-1450. DO NOT SEND FEES OR COMPLETED FORMS TO THIS ADDRESS. **SEND TO: Commissioner for Patents, P.O. Box 1450, Alexandria, VA 22313-1450**.

If you need assistance in completing the form, call 1-800-PTO-9199 (1-800-786-9199) and select option 2.

Under the Paperwork Reduction Act of 1995, no persons are required to respond to a collection of information unless it contains a valid OMB control number.

Substitute for form 1449/PTO

INFORMATION DISCLOSURE STATEMENT BY APPLICANT

Date Submitted: November 29, 2021

(use as many sheets as necessary)

Sheet	10	of	19

Complete if Known	
Application Number	To be determined
Filing Date	November 29, 2021
First Named Inventor	Yaron Brunner
Art Unit	To be determined
Examiner Name	To be determined
Attorney Docket Number	066749-3309

U.S. PATENT DOCUMENTS

Examiner Initials*	Cite No.[1]	Document Number	Publication Date MM-DD-YYYY	Name of Patentee or Applicant of Cited Document	Pages, Columns, Lines, Where Relevant
	A279	D319,016	08-13-1991	Kahl	
	A280	D325,324	04-14-1992	Kahl	
	A281	D326,815	06-09-1992	Meisner et al.	
	A282	D340,167	10-12-1993	Kahl	
	A283	D352,208	11-08-1994	Brookshire	
	A284	D361,511	08-22-1995	Dickinson et al.	
	A285	D395,533	06-23-1998	Morison et al.	
	A286	D415,393	10-19-1999	Kei	
	A287	D420,860	02-22-2000	Golichowski et al.	
	A288	D437,669	02-13-2001	BLASON et al.	
	A289	D456,972	05-07-2002	BLASON et al.	
	A290	D525,789	08-01-2006	Hosking	
	A291	D527,225	08-29-2006	Krieger et al.	
	A292	D536,580	02-13-2007	Krieger et al.	
	A293	D630,851	01-18-2011	Landau et al.	
	A294	D649,350	11-29-2011	Shitrit	
	A295	D653,832	02-07-2012	Vilkomirski et al.	
	A296	D661,858	06-12-2012	Lifshitz et al.	
	A297	D663,952	07-24-2012	CREVLING et al.	
	A298	D664,354	07-31-2012	CREVLING et al.	
	A299	D668,869	10-16-2012	Yamamoto et al.	
	A300	D674,605	01-22-2013	Vilkomirski et al.	
	A301	D701,696	04-01-2014	Shitrit et al.	
	A302	D738,105	09-08-2015	Shitrit	
	A303	D738,106	09-08-2015	Shitrit	
	A304	D738,622	09-15-2015	Sabbag et al.	
	A305	D753,394	04-12-2016	Brunner	
	A306	D753,395	04-12-2016	Brunner	
	A307	D753,396	04-12-2016	Brunner	
	A308	D753,982	04-19-2016	Guirlinger	
	A309	D765,974	09-13-2016	Tonelli et al.	
	A310	D770,179	11-01-2016	Menirom	

Examiner Signature		Date Considered	

*EXAMINER: Initial if reference considered, whether or not citation is in conformance with MPEP 609. Draw line through citation if not in conformance and not considered. Include copy of this form with next communication to applicant. 1 Applicant's unique citation designation number (optional). 2 See Kinds Codes of USPTO Patent Documents at www.uspto.gov or MPEP 901.04. 3 Enter Office that issued the document, by the two-letter code (WIPO Standard ST.3). 4 For Japanese patent documents, the indication of the year of the reign of the Emperor must precede the serial number of the patent document. 5 Kind of document by the appropriate symbols as indicated on the document under WIPO Standard ST.16 if possible. 6 Applicant is to place a check mark here if English language Translation is attached.

This collection of information is required by 37 CFR 1.97 and 1.98. The information is required to obtain or retain a benefit by the public which is to file (and by the USPTO to process) an application. Confidentiality is governed by 35 U.S.C. 122 and 37 CFR 1.14. This collection is estimated to take 2 hours to complete, including gathering, preparing, and submitting the completed application form to the USPTO. Time will vary depending upon the individual case. Any comments on the amount of time you require to complete this form and/or suggestions for reducing this burden, should be sent to the Chief Information Officer, U.S. Patent and Trademark Office, P.O. Box 1450, Alexandria, VA 22313-1450. DO NOT SEND FEES OR COMPLETED FORMS TO THIS ADDRESS. **SEND TO: Commissioner for Patents, P.O. Box 1450, Alexandria, VA 22313-1450**.

If you need assistance in completing the form, call 1-800-PTO-9199 (1-800-786-9199) and select option 2.

Under the Paperwork Reduction Act of 1995, no persons are required to respond to a collection of information unless it contains a valid OMB control number.

Substitute for form 1449/PTO

INFORMATION DISCLOSURE STATEMENT BY APPLICANT

Date Submitted: November 29, 2021

(use as many sheets as necessary)

Sheet	11	of	19

Complete if Known	
Application Number	To be determined
Filing Date	November 29, 2021
First Named Inventor	Yaron Brunner
Art Unit	To be determined
Examiner Name	To be determined
Attorney Docket Number	066749-3309

U.S. PATENT DOCUMENTS

Examiner Initials*	Cite No.[1]	Document Number	Publication Date MM-DD-YYYY	Name of Patentee or Applicant of Cited Document	Pages, Columns, Lines, Where Relevant
	A311	D777,426	01-31-2017	Dahl	
	A312	D784,089	04-18-2017	Furneaux et al.	
	A313	D790,221	06-27-2017	Yahav et al.	
	A314	D803,631	11-28-2017	Min et al.	
	A315	D806,483	01-02-2018	Stanford et al.	
	A316	D814,187	04-03-2018	Caglar	
	A317	D815,831	04-24-2018	Tonelli	
	A318	D816,334	05-01-2018	Brunner	
	A319	D826,510	08-21-2018	Brunner	
	A320	D828,671	09-11-2018	COPE et al.	
	A321	D831,352	10-23-2018	Brunner	
	A322	D833,744	11-20-2018	Yahav et al.	
	A323	D836,995	01-01-2019	Carey et al.	
	A324	D837,515	04-08-2019	Shpitzer	
	A325	D839,681	02-05-2019	Evron et al.	
	A326	D845,080	04-09-2019	Jacobsen	
	A327	D845,081	04-08-2019	Jacobsen	
	A328	D857,387	08-27-2019	Shpitzer	
	A329	D871,013	12-24-2019	LIU	
	A330	D873,085	01-21-2020	DeFrancia	
	A331	D880,252	04-07-2020	Jacobsen	
	A332	D880,951	04-14-2020	Jacobsen	
	A333	D883,752	05-12-2020	Carey et al.	
	A334	D887,788	06-23-2020	Meda et al.	
	A335	D888,422	06-30-2020	Yang	
	A336	D888,503	06-30-2020	Meda et al.	
	A337	D891,193	06-28-2020	Stanford et al.	
	A338	D891,195	07-28-2020	Zhou	
	A339	D891,875	08-04-2020	Olson	
	A340	D892,565	08-11-2020	Astle et al.	
	A341	D895,375	09-08-2020	Hurley, Jr.	
	A342	D895,966	09-15-2020	Brunner et al.	

Examiner Signature		Date Considered	

*EXAMINER: Initial if reference considered, whether or not citation is in conformance with MPEP 609. Draw line through citation if not in conformance and not considered. Include copy of this form with next communication to applicant. 1 Applicant's unique citation designation number (optional). 2 See Kinds Codes of USPTO Patent Documents at www.uspto.gov or MPEP 901.04. 3 Enter Office that issued the document, by the two-letter code (WIPO Standard ST.3). 4 For Japanese patent documents, the indication of the year of the reign of the Emperor must precede the serial number of the patent document. 5 Kind of document by the appropriate symbols as indicated on the document under WIPO Standard ST.16 if possible. 6 Applicant is to place a check mark here if English language Translation is attached.

This collection of information is required by 37 CFR 1.97 and 1.98. The information is required to obtain or retain a benefit by the public which is to file (and by the USPTO to process) an application. Confidentiality is governed by 35 U.S.C. 122 and 37 CFR 1.14. This collection is estimated to take 2 hours to complete, including gathering, preparing, and submitting the completed application form to the USPTO. Time will vary depending upon the individual case. Any comments on the amount of time you require to complete this form and/or suggestions for reducing this burden, should be sent to the Chief Information Officer, U.S. Patent and Trademark Office, P.O. Box 1450, Alexandria, VA 22313-1450. DO NOT SEND FEES OR COMPLETED FORMS TO THIS ADDRESS. **SEND TO: Commissioner for Patents, P.O. Box 1450, Alexandria, VA 22313-1450**.

If you need assistance in completing the form, call 1-800-PTO-9199 (1-800-786-9199) and select option 2.

Under the Paperwork Reduction Act of 1995, no persons are required to respond to a collection of information unless it contains a valid OMB control number.

Substitute for form 1449/PTO

INFORMATION DISCLOSURE STATEMENT BY APPLICANT

Date Submitted: November 29, 2021

(use as many sheets as necessary)

Sheet 12 of 19

Complete if Known	
Application Number	To be determined
Filing Date	November 29, 2021
First Named Inventor	Yaron Brunner
Art Unit	To be determined
Examiner Name	To be determined
Attorney Docket Number	066749-3309

U.S. PATENT DOCUMENTS

Examiner Initials*	Cite No.[1]	Document Number	Publication Date MM-DD-YYYY	Name of Patentee or Applicant of Cited Document	Pages, Columns, Lines, Where Relevant
	A343	D895,967	09-15-2020	Brunner et al.	
	A344	D896,517	09-22-2020	Brunner et al.	
	A345	D896,518	09-22-2020	Brunner et al.	
	A346	D898,320	10-06-2020	Brunner et al.	
	A347	D917,977	05-04-2021	Brunner et al.	
	A348	D923,935	07-06-2021	Brunner et al.	

UNPUBLISHED U.S. PATENT APPLICATION DOCUMENTS

Examiner Initials*	Cite No.[1]	U.S. Patent Application Document Serial Number-Kind Code[2] (*if known*)	Filing Date of Cited Document MM-DD-YYYY	Name of Patentee or Applicant of Cited Document	Pages, Columns, Lines, Where Relevant Passages or Relevant Figures Appear

FOREIGN PATENT DOCUMENTS

Examiner Initials*	Cite No.[1]	Foreign Patent Document Country Code[3]-Number[4]-Kind Code[5] (*if known*)	Publication Date MM-DD-YYYY	Name of Patentee or Applicant of Cited Documents	Pages, Columns, Lines, Where Relevant Passages or Relevant Figures Appear	T[6]
	A349	CN101068661	11-07-2007	BOSCH GMBH ROBERT		
	A350	CN102137795	07-27-2011	TTS ToolTechnic Systems AG		
	A351	CN102248523	11-23-2011	CHANGHONG HAN et al.		
	A352	CN102469899	05-23-2012	KAERCHER GMBH AND CO KG ALFRED		
	A353	CN102608238	07-25-2012	Zhengzhou Tobacco Res Cntc		
	A354	CN102834035	12-19-2012	KAERCHER GMBH AND CO ALFRED KG		
	A355	CN103118578	05-22-2013	KAERCHER GMBH AND CO ALFRED KG		
	A356	CN103659777	03-26-2014	Bosch GMBH Robert		
	A357	CN200947356	09-12-2007	FU GANG		
	A358	CN204161752	02-18-2015	Meridian International Co LTD		
	A359	CN2608238	03-31-2004	BAO JIANGANG		
	A360	CN302371147	03-27-2013	吉田攻一郎		

Examiner Signature		Date Considered	

*EXAMINER: Initial if reference considered, whether or not citation is in conformance with MPEP 609. Draw line through citation if not in conformance and not considered. Include copy of this form with next communication to applicant. 1 Applicant's unique citation designation number (optional). 2 See Kinds Codes of USPTO Patent Documents at www.uspto.gov or MPEP 901.04. 3 Enter Office that issued the document, by the two-letter code (WIPO Standard ST.3). 4 For Japanese patent documents, the indication of the year of the reign of the Emperor must precede the serial number of the patent document. 5 Kind of document by the appropriate symbols as indicated on the document under WIPO Standard ST.16 if possible. 6 Applicant is to place a check mark here if English language Translation is attached.

This collection of information is required by 37 CFR 1.97 and 1.98. The information is required to obtain or retain a benefit by the public which is to file (and by the USPTO to process) an application. Confidentiality is governed by 35 U.S.C. 122 and 37 CFR 1.14. This collection is estimated to take 2 hours to complete, including gathering, preparing, and submitting the completed application form to the USPTO. Time will vary depending upon the individual case. Any comments on the amount of time you require to complete this form and/or suggestions for reducing this burden, should be sent to the Chief Information Officer, U.S. Patent and Trademark Office, P.O. Box 1450, Alexandria, VA 22313-1450. DO NOT SEND FEES OR COMPLETED FORMS TO THIS ADDRESS. **SEND TO: Commissioner for Patents, P.O. Box 1450, Alexandria, VA 22313-1450**.

If you need assistance in completing the form, call 1-800-PTO-9199 (1-800-786-9199) and select option 2.

Under the Paperwork Reduction Act of 1995, no persons are required to respond to a collection of information unless it contains a valid OMB control number.

Substitute for form 1449/PTO

INFORMATION DISCLOSURE STATEMENT BY APPLICANT

Date Submitted: November 29, 2021

(use as many sheets as necessary)

Sheet	13	of	19

Complete if Known	
Application Number	To be determined
Filing Date	November 29, 2021
First Named Inventor	Yaron Brunner
Art Unit	To be determined
Examiner Name	To be determined
Attorney Docket Number	066749-3309

FOREIGN PATENT DOCUMENTS

Examiner Initials*	Cite No.[1]	Foreign Patent Document Country Code[3]-Number[4]-Kind Code[5] (*if known*)	Publication Date MM-DD-YYYY	Name of Patentee or Applicant of Cited Documents	Pages, Columns, Lines, Where Relevant Passages or Relevant Figures Appear	T[6]
	A361	DE102004057870	06-01-2006	BOSCH GMBH ROBERT		
	A362	DE102010003754	10-13-2011	KAERCHER GMBH AND CO ALFRED KG		
	A363	DE102010003756	10-13-2011	KAERCHER GMBH AND CO ALFRED KG		
	A364	DE102012106482	01-23-2014	WAIGEL JOACHIM		
	A365	DE102012220837	05-15-2014	BOSCH GMBH ROBERT		
	A366	DE102015013053	04-13-2017	BURCHIA ROLF		
	A367	DE102015112204	02-16-2017	PERL MICHAEL		
	A368	DE19750543	05-20-1999	FESTO TOOLTECHNIC GMBH AND CO		
	A369	DE202011002617	04-28-2011	Bekuplast Kunststoffverarbeitungs-GmbH		
	A370	DE202014103695	10-30-2014	Metabowerke Gmbh		
	A371	DE202015005752	11-21-2016	PLASTON AG		
	A372	DE202015105053	10-31-2016	AUER PACKAGING GMBH		
	A373	DE20218996	03-06-2003	TTS TOOLTECHNIC SYSTEMS AG		
	A374	DE29708343	07-03-1997	FLIESEN RICHTER GMBH		
	A375	DE3510307	09-25-1986	SPIELHOFF HANS-PETER		
	A376	DE402018201520	05-11-2018	Dirk SCHLENZKA		
	A377	DE4415638	11-09-1995	Halm		
	A378	DE9313802	12-02-1993	TUNG I ENTERPRISE CO		
	A379	EM000705231-0001	04-12-2007	Terry Store-Age S.P.A.		
	A380	EM002419283-0001	03-06-2014	Keter Plastic Ltd.		
	A381	EP0916302	05-19-1999	FESTO TOOLTECHNIC GMBH AND CO		
	A382	EP1321247	06-25-2003	VALENTINI GUIDO		
	A383	EP1428764	06-16-2004	DUBOIS JEAN-MARC et al.		
	A384	EP1819487	08-22-2007	BOSCH GMBH ROBERT		
	A385	EP2289671	03-02-2011	Stanley Works Israel		
	A386	EP2346741	07-27-2011	MADSEN JENS OLE		

Examiner Signature		Date Considered	

*EXAMINER: Initial if reference considered, whether or not citation is in conformance with MPEP 609. Draw line through citation if not in conformance and not considered. Include copy of this form with next communication to applicant. 1 Applicant's unique citation designation number (optional). 2 See Kinds Codes of USPTO Patent Documents at www.uspto.gov or MPEP 901.04. 3 Enter Office that issued the document, by the two-letter code (WIPO Standard ST.3). 4 For Japanese patent documents, the indication of the year of the reign of the Emperor must precede the serial number of the patent document. 5 Kind of document by the appropriate symbols as indicated on the document under WIPO Standard ST.16 if possible. 6 Applicant is to place a check mark here if English language Translation is attached.

This collection of information is required by 37 CFR 1.97 and 1.98. The information is required to obtain or retain a benefit by the public which is to file (and by the USPTO to process) an application. Confidentiality is governed by 35 U.S.C. 122 and 37 CFR 1.14. This collection is estimated to take 2 hours to complete, including gathering, preparing, and submitting the completed application form to the USPTO. Time will vary depending upon the individual case. Any comments on the amount of time you require to complete this form and/or suggestions for reducing this burden, should be sent to the Chief Information Officer, U.S. Patent and Trademark Office, P.O. Box 1450, Alexandria, VA 22313-1450. DO NOT SEND FEES OR COMPLETED FORMS TO THIS ADDRESS. **SEND TO: Commissioner for Patents, P.O. Box 1450, Alexandria, VA 22313-1450**.

If you need assistance in completing the form, call 1-800-PTO-9199 (1-800-786-9199) and select option 2.

Under the Paperwork Reduction Act of 1995, no persons are required to respond to a collection of information unless it contains a valid OMB control number.

Substitute for form 1449/PTO

INFORMATION DISCLOSURE STATEMENT BY APPLICANT

Date Submitted: November 29, 2021

(use as many sheets as necessary)

Sheet	14	of	19

Complete if Known	
Application Number	To be determined
Filing Date	November 29, 2021
First Named Inventor	Yaron Brunner
Art Unit	To be determined
Examiner Name	To be determined
Attorney Docket Number	066749-3309

FOREIGN PATENT DOCUMENTS

Examiner Initials*	Cite No.[1]	Foreign Patent Document Country Code[3]-Number[4]-Kind Code[5] (*if known*)	Publication Date MM-DD-YYYY	Name of Patentee or Applicant of Cited Documents	Pages, Columns, Lines, Where Relevant Passages or Relevant Figures Appear	T[6]
	A387	EP2456341	05-30-2012	KAERCHER GMBH AND CO ALFRED KG		
	A388	EP2555660	02-13-2013	KAERCHER GMBH AND CO ALFRED KG		
	A389	EP2555661	02-13-2013	KAERCHER GMBH AND CO ALFRED KG		
	A390	EP2805799	11-23-2016	FLEISCHMANN BERND et al.		
	A391	EP3141354	03-15-2017	KOCH SIMON et al.		
	A392	GB2047181B	02-02-1983	REUNIS SA ATELIERS		
	A393	GB2110076	06-15-1983	Ostling Bernt et al.		
	A394	GB2330521	04-28-1999	SPOONER PAUL		
	A395	GB2406331	03-30-2005	JEFFRIES JULIAN CLIFFORD		
	A396	GB2413265	10-26-2005	THOMSON BRIAN		
	A397	GB2449934	12-10-2008	Protrend Co Ltd.		
	A398	GB694707	07-22-1953	GEORGE ARTHUR CHARD		
	A399	JP D1180963	08-04-2003	Name not in English		
	A400	JP D1455321	11-12-2012	Name not in English		
	A401	JP D1625407	02-25-2019	Name not in English		
	A402	JP1276744	07-18-2006	Hirofumi Kishimoto		
	A403	JP1477050	08-19-2013	Ryosuke Omachi		
	A404	JP2003194020A	07-09-2003	SUGIMURA ATSUAKI		
	A405	JP2013022972	02-04-2013	IZUMI DOI, HIDEKI NOMA, MASAYUKI NAKANISHI		
	A406	JP2013022976	02-04-2013	DAIFUKU KK		
	A407	JPD1395115	08-16-2010	Toyoharu Senda		
	A408	JPD1395116	08-16-2010	Toyoharu Senda		
	A409	JPD1503434	07-28-2014	Name not in English		
	A410	JPD1665028	08-03-2020	Keter Plastic LTD et al.		
	A411	KR 3008066040000	07-22-2015	Woojubon Co. LTD		
	A412	KR 3008496000000	04-15-2016	Hwang, Hyung Keun		
	A413	KR30-0271616	02-09-2000	Joong Chui Ahm		

Examiner Signature		Date Considered	

*EXAMINER: Initial if reference considered, whether or not citation is in conformance with MPEP 609. Draw line through citation if not in conformance and not considered. Include copy of this form with next communication to applicant. 1 Applicant's unique citation designation number (optional). 2 See Kinds Codes of USPTO Patent Documents at www.uspto.gov or MPEP 901.04. 3 Enter Office that issued the document, by the two-letter code (WIPO Standard ST.3). 4 For Japanese patent documents, the indication of the year of the reign of the Emperor must precede the serial number of the patent document. 5 Kind of document by the appropriate symbols as indicated on the document under WIPO Standard ST.16 if possible. 6 Applicant is to place a check mark here if English language Translation is attached.

This collection of information is required by 37 CFR 1.97 and 1.98. The information is required to obtain or retain a benefit by the public which is to file (and by the USPTO to process) an application. Confidentiality is governed by 35 U.S.C. 122 and 37 CFR 1.14. This collection is estimated to take 2 hours to complete, including gathering, preparing, and submitting the completed application form to the USPTO. Time will vary depending upon the individual case. Any comments on the amount of time you require to complete this form and/or suggestions for reducing this burden, should be sent to the Chief Information Officer, U.S. Patent and Trademark Office, P.O. Box 1450, Alexandria, VA 22313-1450. DO NOT SEND FEES OR COMPLETED FORMS TO THIS ADDRESS. **SEND TO: Commissioner for Patents, P.O. Box 1450, Alexandria, VA 22313-1450**.

If you need assistance in completing the form, call 1-800-PTO-9199 (1-800-786-9199) and select option 2.

Under the Paperwork Reduction Act of 1995, no persons are required to respond to a collection of information unless it contains a valid OMB control number.

Substitute for form 1449/PTO

INFORMATION DISCLOSURE STATEMENT BY APPLICANT

Date Submitted: November 29, 2021

(use as many sheets as necessary)

Sheet	15	of	19

Complete if Known	
Application Number	To be determined
Filing Date	November 29, 2021
First Named Inventor	Yaron Brunner
Art Unit	To be determined
Examiner Name	To be determined
Attorney Docket Number	066749-3309

FOREIGN PATENT DOCUMENTS

Examiner Initials*	Cite No.[1]	Foreign Patent Document Country Code[3]-Number[4]-Kind Code[5] (*if known*)	Publication Date MM-DD-YYYY	Name of Patentee or Applicant of Cited Documents	Pages, Columns, Lines, Where Relevant Passages or Relevant Figures Appear	T[6]
	A414	KR30-0320243	06-10-2002	Joung Gu Kang		
	A415	KR3008422360000	03-02-2016	NPC Co., Ltd. HYUNDAI GLOVIS Co., Ltd.		
	A416	KR3008599650000	06-22-2016	NPC Co., Ltd.		
	A417	KR3008812960000	11-15-2016	NPC Co., Ltd.		
	A418	KR3009995990000	03-27-2019	Korea Container Pool Co, Ltd.		
	A419	TW 206875	05-21-1993	Name not in English		
	A420	TW D192092	08-11-2018	Name not in English		
	A421	TW135074	06-01-2010	Yi Hua Wu		
	A422	TW168686	07-01-2015	Kang Delun Business Co., Ltd.		
	A423	TW174412	03-21-2016	Lee Hsin Chang		
	A424	TWl324578	05-11-2010	NAIDU VISHNU et al.		
	A425	WO07121745	11-01-2007	MADSEN JENS OLE		
	A426	WO07121746	11-01-2007	MADSEN JENS OLE		
	A427	WO09140965	11-26-2009	MADSEN JENS OLE		
	A428	WO11009480	01-27-2011	RICKLEFSEN DIRK et al.		
	A429	WO13026084	02-28-2013	VAN DER LINDE et al.		
	A430	WO14125488	08-21-2014	BRUNNER VARON		
	A431	WO17212840	12-14-2017	FURUTA YOSHIHISA		
	A432	WO2005/045886	05-19-2005	Brooks Automation, Inc.		
	A433	WO2007/121746	11-01-2007	J.O. MADSEN APS; MADSEN JENS OLE		
	A434	WO2007121745Al	11-01-2007	MADSEN JENS OLE		
	A435	WO2009/140965	11-26-2009	J.O. MADSEN APS; MADSEN JENS OLE		
	A436	WO2011/009480	01-27-2011	HENSEL MAIC; HESS STEFAN; KAERCHER GMBH &CO KG		
	A437	WO2013/026084	02-28-2013	CONNOR PAUL FRANCIS; DEMAIN TECHNOLOGY PTY LTD.		
	A438	WO2014/125488	08-21-2014	KETER PLASTIC LTD		

Examiner Signature		Date Considered	

*EXAMINER: Initial if reference considered, whether or not citation is in conformance with MPEP 609. Draw line through citation if not in conformance and not considered. Include copy of this form with next communication to applicant. 1 Applicant's unique citation designation number (optional). 2 See Kinds Codes of USPTO Patent Documents at www.uspto.gov or MPEP 901.04. 3 Enter Office that issued the document, by the two-letter code (WIPO Standard ST.3). 4 For Japanese patent documents, the indication of the year of the reign of the Emperor must precede the serial number of the patent document. 5 Kind of document by the appropriate symbols as indicated on the document under WIPO Standard ST.16 if possible. 6 Applicant is to place a check mark here if English language Translation is attached.

This collection of information is required by 37 CFR 1.97 and 1.98. The information is required to obtain or retain a benefit by the public which is to file (and by the USPTO to process) an application. Confidentiality is governed by 35 U.S.C. 122 and 37 CFR 1.14. This collection is estimated to take 2 hours to complete, including gathering, preparing, and submitting the completed application form to the USPTO. Time will vary depending upon the individual case. Any comments on the amount of time you require to complete this form and/or suggestions for reducing this burden, should be sent to the Chief Information Officer, U.S. Patent and Trademark Office, P.O. Box 1450, Alexandria, VA 22313-1450. DO NOT SEND FEES OR COMPLETED FORMS TO THIS ADDRESS. **SEND TO: Commissioner for Patents, P.O. Box 1450, Alexandria, VA 22313-1450**.

If you need assistance in completing the form, call 1-800-PTO-9199 (1-800-786-9199) and select option 2.

Under the Paperwork Reduction Act of 1995, no persons are required to respond to a collection of information unless it contains a valid OMB control number.

Substitute for form 1449/PTO

INFORMATION DISCLOSURE STATEMENT BY APPLICANT

Date Submitted: November 29, 2021

(use as many sheets as necessary)

Sheet	16	of	19

Complete if Known	
Application Number	To be determined
Filing Date	November 29, 2021
First Named Inventor	Yaron Brunner
Art Unit	To be determined
Examiner Name	To be determined
Attorney Docket Number	066749-3309

FOREIGN PATENT DOCUMENTS

Examiner Initials*	Cite No.[1]	Foreign Patent Document Country Code[3]-Number[4]-Kind Code[5] (*if known*)	Publication Date MM-DD-YYYY	Name of Patentee or Applicant of Cited Documents	Pages, Columns, Lines, Where Relevant Passages or Relevant Figures Appear	T[6]
	A439	WO2016142935	09-15-2016	BRUNNER, Varon et al.		
	A440	WO2017/212840	12-14-2017	GENESIS CO., LTD.		
	A441	WO2017191628	11-09-2017	BRUNNER VARON		
	A442	WO2017O28845	02-23-2017	ROTHENBERGER AG		
	A443	WO2017O28845	02-23-2017	ROTHENBERGER AG		

NON PATENT LITERATURE DOCUMENTS

Examiner Initials*	Cite No.[1]	Include name of the author (in CAPITAL LETTERS), title of the article (when appropriate), title of the item (book, magazine, journal, serial, symposium, catalog, etc.) date, page(s), volume-issue number(s), publisher, city and/or country where published.	T[6]
	A444	"Blitz Box - Portable Storage Box/ Shelf," The Green Head Finds Cool New Stuff, https://www.thegreenhead.com/2013/03/blitz-box-portable-storage-box-shelf.php, Per Wayback, website dates back to February 15, 2015, 5 pages.	
	A445	"BluCave Universal Storage System," BATAVIA Tools to Build, https://batavia.eu/blucave- storage-system/, believed to be available at least as early as November 29, 2017, 5 pages.	
	A446	"Dewalt TSTAK Carrier Trolley," ITS, https://www.its.eo.uk/pd/171229-Dewalt-TSTAK- Carrier-Trolley-_DEW171229.htm, Per Wayback, website dates back to May 2, 2015, 2 pages.	
	A447	"DeWalt TSTAK Vac Rack (Suits DW DWV9O2M & DWV9OOL) DWV95OO-XJ," Get Tools Direct, https://www.gettoolsdirect.eom.au/dewalt-tstak-vac-rack-suits-dwv902m-and- dwv9OO1-dwv95OO-xj.html, believed to be available at least as early as November 29,2017, 4 pages.	
	A448	"Hopkins FloTool 91002 Rhino Box with Mount," Amazon.com, https://www.amazon.com/exec/obidos/ASIN/BOO3K15F31/2O14OOOO-2O, believed to be available at least as early as November 29, 2017, 7 pages.	
	A449	"Tool Skoal, TSTAK Phase 2 Upgrades I TSTAK Carts - First Look - Tool Skoal," YouTube, September 7, 2013, https://www.youtube.com/watch?v=jb06y6J1dr4&feature=youtu.be&t=197, 1 page.	
	A450	Batavia Gmbh, BluCave Storage System, https://protect-us.mimecast.com/s/5XIGCR6KypcgJnlKi9EDoim?domain=batavia.eu, believed to be available at least as early as November 29, 2017, 7 pages.	
	A451	BluCave Video, https://www.youtube.com/watch ?v=Sw7fQQPwo0tY &feature=youtu.be&t=32, believed to be available at least as early as November 29, 2017.	
	A452	Exhibit 1001 in Petition for Inter Partes Review of U.S. Pat. No. 10,583,962, filed January 5, 2021, 64 pages.	

Examiner Signature		Date Considered	

*EXAMINER: Initial if reference considered, whether or not citation is in conformance with MPEP 609. Draw line through citation if not in conformance and not considered. Include copy of this form with next communication to applicant. 1 Applicant's unique citation designation number (optional). 2 See Kinds Codes of USPTO Patent Documents at www.uspto.gov or MPEP 901.04. 3 Enter Office that issued the document, by the two-letter code (WIPO Standard ST.3). 4 For Japanese patent documents, the indication of the year of the reign of the Emperor must precede the serial number of the patent document. 5 Kind of document by the appropriate symbols as indicated on the document under WIPO Standard ST.16 if possible. 6 Applicant is to place a check mark here if English language Translation is attached.

This collection of information is required by 37 CFR 1.97 and 1.98. The information is required to obtain or retain a benefit by the public which is to file (and by the USPTO to process) an application. Confidentiality is governed by 35 U.S.C. 122 and 37 CFR 1.14. This collection is estimated to take 2 hours to complete, including gathering, preparing, and submitting the completed application form to the USPTO. Time will vary depending upon the individual case. Any comments on the amount of time you require to complete this form and/or suggestions for reducing this burden, should be sent to the Chief Information Officer, U.S. Patent and Trademark Office, P.O. Box 1450, Alexandria, VA 22313-1450. DO NOT SEND FEES OR COMPLETED FORMS TO THIS ADDRESS. **SEND TO: Commissioner for Patents, P.O. Box 1450, Alexandria, VA 22313-1450**.

If you need assistance in completing the form, call 1-800-PTO-9199 (1-800-786-9199) and select option 2.

Under the Paperwork Reduction Act of 1995, no persons are required to respond to a collection of information unless it contains a valid OMB control number.

Substitute for form 1449/PTO

INFORMATION DISCLOSURE STATEMENT BY APPLICANT

Date Submitted: November 29, 2021

(use as many sheets as necessary)

Sheet	17	of	19

Complete if Known	
Application Number	To be determined
Filing Date	November 29, 2021
First Named Inventor	Yaron Brunner
Art Unit	To be determined
Examiner Name	To be determined
Attorney Docket Number	066749-3309

NON PATENT LITERATURE DOCUMENTS

Examiner Initials*	Cite No.[1]	Include name of the author (in CAPITAL LETTERS), title of the article (when appropriate), title of the item (book, magazine, journal, serial, symposium, catalog, etc.) date, page(s), volume-issue number(s), publisher, city and/or country where published.	T[6]
	A453	Exhibit 1002 in Petition for Inter Partes Review of U.S. Pat. No. 10,583,962, filed January 5, 2021, 75 pages.	
	A454	Exhibit 1003 in Petition for Inter Partes Review of U.S. Pat. No. 10,583,962, filed January 5, 2021, 13 pages.	
	A455	Exhibit 1004 in Petition for Inter Partes Review of U.S. Pat. No. 10,583,962, filed January 5, 2021, 18 pages.	
	A456	Exhibit 1005 in Petition for Inter Partes Review of U.S. Pat. No. 10,583,962, filed January 5, 2021, 9 pages.	
	A457	Exhibit 1006 in Petition for Inter Partes Review of U.S. Pat. No. 10,583,962, filed January 5, 2021, 176 pages.	
	A458	Exhibit 1007 in Petition for Inter Partes Review of U.S. Pat. No. 10,583,962, filed January 5, 2021, 22 pages.	
	A459	Exhibit 1008 in Petition for Inter Partes Review of U.S. Pat. No. 10,583,962, filed January 5, 2021, 6 pages.	
	A460	Exhibit 1009 in Petition for Inter Partes Review of U.S. Pat. No. 10,583,962, filed January 5, 2021, 24 pages.	
	A461	Exhibit 1010 in Petition for Inter Partes Review of U.S. Pat. No. 10,583,962, filed January 5, 2021, 19 pages.	
	A462	Exhibit 1011 in Petition for Inter Partes Review of U.S. Pat. No. 10,583,962, filed January 5, 2021, 26 pages.	
	A463	Exhibit 1012 in Petition for Inter Partes Review of U.S. Pat. No. 10,583,962, filed January 5, 2021, 3 pages.	
	A464	Exhibit 1013 in Petition for Inter Partes Review of U.S. Pat. No. 10,583,962, filed January 5, 2021, 168 pages.	
	A465	Exhibit 1014 in Petition for Inter Partes Review of U.S. Pat. No. 10,583,962, filed January 5, 2021, PART A pages 1-166 of 481 pages.	

Examiner Signature		Date Considered	

*EXAMINER: Initial if reference considered, whether or not citation is in conformance with MPEP 609. Draw line through citation if not in conformance and not considered. Include copy of this form with next communication to applicant. 1 Applicant's unique citation designation number (optional). 2 See Kinds Codes of USPTO Patent Documents at www.uspto.gov or MPEP 901.04. 3 Enter Office that issued the document, by the two-letter code (WIPO Standard ST.3). 4 For Japanese patent documents, the indication of the year of the reign of the Emperor must precede the serial number of the patent document. 5 Kind of document by the appropriate symbols as indicated on the document under WIPO Standard ST.16 if possible. 6 Applicant is to place a check mark here if English language Translation is attached.

This collection of information is required by 37 CFR 1.97 and 1.98. The information is required to obtain or retain a benefit by the public which is to file (and by the USPTO to process) an application. Confidentiality is governed by 35 U.S.C. 122 and 37 CFR 1.14. This collection is estimated to take 2 hours to complete, including gathering, preparing, and submitting the completed application form to the USPTO. Time will vary depending upon the individual case. Any comments on the amount of time you require to complete this form and/or suggestions for reducing this burden, should be sent to the Chief Information Officer, U.S. Patent and Trademark Office, P.O. Box 1450, Alexandria, VA 22313-1450. DO NOT SEND FEES OR COMPLETED FORMS TO THIS ADDRESS. **SEND TO: Commissioner for Patents, P.O. Box 1450, Alexandria, VA 22313-1450**.

If you need assistance in completing the form, call 1-800-PTO-9199 (1-800-786-9199) and select option 2.

Under the Paperwork Reduction Act of 1995, no persons are required to respond to a collection of information unless it contains a valid OMB control number.

Substitute for form 1449/PTO

INFORMATION DISCLOSURE STATEMENT BY APPLICANT

Date Submitted: November 29, 2021

(use as many sheets as necessary)

Sheet 18 of 19

Complete if Known	
Application Number	To be determined
Filing Date	November 29, 2021
First Named Inventor	Yaron Brunner
Art Unit	To be determined
Examiner Name	To be determined
Attorney Docket Number	066749-3309

NON PATENT LITERATURE DOCUMENTS

Examiner Initials*	Cite No.[1]	Include name of the author (in CAPITAL LETTERS), title of the article (when appropriate), title of the item (book, magazine, journal, serial, symposium, catalog, etc.) date, page(s), volume-issue number(s), publisher, city and/or country where published.	T[6]
	A466	Exhibit 1014 in Petition for Inter Partes Review of U.S. Pat. No. 10,583,962, filed January 5, 2021, PART B pages 167-320 of 481 pages.	
	A467	Exhibit 1014 in Petition for Inter Partes Review of U.S. Pat. No. 10,583,962, filed January 5, 2021, PART C pages 321-481 of 481 pages.	
	A468	Exhibit 1015 in Petition for Inter Partes Review of U.S. Pat. No. 10,583,962, filed January 5, 2021, 6 pages.	
	A469	Exhibit 1016 in Petition for Inter Partes Review of U.S. Pat. No. 10,583,962, filed January 5, 2021, 242 pages.	
	A470	Exhibit 1017 in Petition for Inter Partes Review of U.S. Pat. No. 10,583,962, filed January 5, 2021, 6 pages.	
	A471	Exhibit 1018 in Petition for Inter Partes Review of U.S. Pat. No. 10,583,962, filed January 5, 2021, 250 pages.	
	A472	Exhibit 1019 in Petition for Inter Partes Review of U.S. Pat. No. 10,583,962, filed January 5, 2021, 44 pages.	
	A473	Exhibit 1020 in Petition for Inter Partes Review of U.S. Pat. No. 10,583,962, filed January 5, 2021, 5 pages.	
	A474	Exhibit 1021 in Petition for Inter Partes Review of U.S. Pat. No. 10,583,962, filed January 5, 2021, 1 page.	
	A475	Exhibit 1022 in Petition for Inter Partes Review of U.S. Pat. No. 10,583,962, filed January 5, 2021, 1 page.	
	A476	Exhibit 1023 in Petition for Inter Partes Review of U.S. Pat. No. 10,583,962, filed January 5, 2021, 24 pages.	
	A477	Exhibit 1024 in Petition for Inter Partes Review of U.S. Pat. No. 10,583,962, filed January 5, 2021, 28 pages.	
	A478	Inter Partes Review No. 2021-00373, "Petition for Inter Partes Review of U.S. Pat. No. 10,583,962," filed January 5, 2021, 198 pages.	

Examiner Signature		Date Considered	

*EXAMINER: Initial if reference considered, whether or not citation is in conformance with MPEP 609. Draw line through citation if not in conformance and not considered. Include copy of this form with next communication to applicant. 1 Applicant's unique citation designation number (optional). 2 See Kinds Codes of USPTO Patent Documents at www.uspto.gov or MPEP 901.04. 3 Enter Office that issued the document, by the two-letter code (WIPO Standard ST.3). 4 For Japanese patent documents, the indication of the year of the reign of the Emperor must precede the serial number of the patent document. 5 Kind of document by the appropriate symbols as indicated on the document under WIPO Standard ST.16 if possible. 6 Applicant is to place a check mark here if English language Translation is attached.

This collection of information is required by 37 CFR 1.97 and 1.98. The information is required to obtain or retain a benefit by the public which is to file (and by the USPTO to process) an application. Confidentiality is governed by 35 U.S.C. 122 and 37 CFR 1.14. This collection is estimated to take 2 hours to complete, including gathering, preparing, and submitting the completed application form to the USPTO. Time will vary depending upon the individual case. Any comments on the amount of time you require to complete this form and/or suggestions for reducing this burden, should be sent to the Chief Information Officer, U.S. Patent and Trademark Office, P.O. Box 1450, Alexandria, VA 22313-1450. DO NOT SEND FEES OR COMPLETED FORMS TO THIS ADDRESS. **SEND TO: Commissioner for Patents, P.O. Box 1450, Alexandria, VA 22313-1450**.

If you need assistance in completing the form, call 1-800-PTO-9199 (1-800-786-9199) and select option 2.

Under the Paperwork Reduction Act of 1995, no persons are required to respond to a collection of information unless it contains a valid OMB control number.

Substitute for form 1449/PTO

INFORMATION DISCLOSURE STATEMENT BY APPLICANT

Date Submitted: November 29, 2021

(use as many sheets as necessary)

Sheet	19	of	19

Complete if Known	
Application Number	To be determined
Filing Date	November 29, 2021
First Named Inventor	Yaron Brunner
Art Unit	To be determined
Examiner Name	To be determined
Attorney Docket Number	066749-3309

NON PATENT LITERATURE DOCUMENTS

Examiner Initials*	Cite No.[1]	Include name of the author (in CAPITAL LETTERS), title of the article (when appropriate), title of the item (book, magazine, journal, serial, symposium, catalog, etc.) date, page(s), volume-issue number(s), publisher, city and/or country where published.	T[6]
	A479	International Search Report and Written Opinion for International Application No. PCT/IL2019/050689, dated August 23, 2019, 21 pages.	
	A480	International Search Report and Written Opinion for International Application No. PCT/IL2020/050433, dated June 21, 2020, 14 pages	
	A481	International Search Report and Written Opinion for International Application No. PCT/US2018/033161, dated August 6, 2018, 14 pages.	
	A482	International Search Report and Written Opinion for International Application No. PCT/US2018/044629, dated January 9, 2019, 22 pages.	
	A483	International Search Report and Written Opinion for International Application No. PCT/US2019/014940, dated July 26, 2019, 7 pages.	
	A484	Non-Final Rejection issued April 12, 2018, in United States Application No. 15/826,201. (16 Pages) (Docket No. J699501JS01 446373-419).	
	A485	Sortimo Logistix, "Mobile Sortimente", brochure, believed to be available at least as early as November 29, 2017, 17 pages.	
	A486	STUART, "Ryobi ToolBlox Tool Cabinet System!," TOOLGUYD, September 18, 2014, https://toolguyd.com/ryobi-toolblox-cabinets/, 23 pages.	
	A487	STUART, "Sys-Cart Base, a Systainer Mounting Platform," TOOLGUYD, July 28, 2014, https://toolguyd.com/systainer-sys-cart-mounting-base/, 11 pages.	
	A488	VERTAK, https://www.alibaba.com/product-detail/Vertak-global-patented-multi-funciton-portable_60217794260.html, believed to be available at least as early as November 29, 2017.	

Examiner Signature		Date Considered	

*EXAMINER: Initial if reference considered, whether or not citation is in conformance with MPEP 609. Draw line through citation if not in conformance and not considered. Include copy of this form with next communication to applicant. 1 Applicant's unique citation designation number (optional). 2 See Kinds Codes of USPTO Patent Documents at www.uspto.gov or MPEP 901.04. 3 Enter Office that issued the document, by the two-letter code (WIPO Standard ST.3). 4 For Japanese patent documents, the indication of the year of the reign of the Emperor must precede the serial number of the patent document. 5 Kind of document by the appropriate symbols as indicated on the document under WIPO Standard ST.16 if possible. 6 Applicant is to place a check mark here if English language Translation is attached.

This collection of information is required by 37 CFR 1.97 and 1.98. The information is required to obtain or retain a benefit by the public which is to file (and by the USPTO to process) an application. Confidentiality is governed by 35 U.S.C. 122 and 37 CFR 1.14. This collection is estimated to take 2 hours to complete, including gathering, preparing, and submitting the completed application form to the USPTO. Time will vary depending upon the individual case. Any comments on the amount of time you require to complete this form and/or suggestions for reducing this burden, should be sent to the Chief Information Officer, U.S. Patent and Trademark Office, P.O. Box 1450, Alexandria, VA 22313-1450. DO NOT SEND FEES OR COMPLETED FORMS TO THIS ADDRESS. **SEND TO: Commissioner for Patents, P.O. Box 1450, Alexandria, VA 22313-1450**.

If you need assistance in completing the form, call 1-800-PTO-9199 (1-800-786-9199) and select option 2.

IN THE UNITED STATES PATENT AND TRADEMARK OFFICE

Applicant: Milwaukee Electric Tool Corporation et al.

Title: Utility Assembly and Coupling Mechanism

Prior Appl. No.: 17/391,904
Prior Appl. Filing Date: August 2, 2021

Examiner: To be determined

Art Unit: To be determined

CONTINUING PATENT APPLICATION TRANSMITTAL LETTER

Commissioner for Patents
P.O. Box 1450
Alexandria, VA 22313-1450

Transmitted herewith for filing under 37 C.F.R. § 1.53(b) is a:

[X] Continuation [ ] Division [ ] Continuation-In-Part (CIP)

of the above-identified copending prior application in which no patenting, abandonment, or termination of proceedings has occurred. Priority to the above-identified prior application is hereby claimed under 35 U.S.C. § 120 for this continuing application. The entire disclosure of the above-identified prior application is considered as being part of the disclosure of the accompanying continuing application and is hereby incorporated by reference therein in its entirety.

Enclosed are:

[**X**] Application Data Sheet (37 CFR 1.76)

[**X**] Cover Page, Description, Claims and Abstract

[**X**] Preliminary Amendment

[**X**] Formal drawings

[**X**] Copy of Inventor Declaration for parent Application No. 17/391,904, filed August 2, 2021

[**X**] Power of Attorney from Assignee/Applicant

[**X**] Information Disclosure Statement

[**X**] Form PTO/SB/08

The requisite fees are being charged to Deposit Account No. 18-0882.

The Commissioner is hereby authorized to charge any additional fees which may be required regarding this application under 37 C.F.R. §§ 1.16-1.17, or credit any overpayment, to Deposit Account No. 18-0882.

Please direct all correspondence to the undersigned attorney or agent at the address indicated below.

Respectfully submitted,

Date November 29, 2021

By /Derek H. Campbell/

Reinhart Boerner Van Deuren s.c.
Customer Number: 142078
Telephone: (414) 298-8374
Facsimile: (414) 298-8097

Derek H. Campbell
Attorney for Applicants
Registration No. 70,608

Application Data Sheet

Application Information

Application Number:	To Be Determined
Application Type:	Nonprovisional
Subject Matter:	Utility
CD-ROM or CD-R:	None
Computer Readable Form (CRF):	No
Title:	Utility Assembly and Coupling Mechanism
Attorney Docket Number:	066749-3309
Request for Early Publication:	No
Request for Non-Publication:	No
Suggested Drawing Figure:	1A
Total Drawing Sheets:	48
Small Entity:	No
Petition included:	No
Secrecy Order in Parent Appl.:	No

Inventor Information

Status:	Full Capacity
Given Name:	Yaron
Family Name:	Brunner
City of Residence:	Kibbutz Gvat
State or Province of Residence:	
Country of Residence:	IL
Street of mailing address:	Kibbutz Gvat, P.O.B. 248
City of mailing address:	Kibbutz Gvat

State or Province of mailing address:	
Country of mailing address:	IL
Postal or Zip Code of mailing address:	3657900

Status:	Full Capacity
Given Name:	Grant T.
Family Name:	Squiers
City of Residence:	Cudahy
State or Province of Residence:	Wisconsin
Country of Residence:	US
Street of mailing address:	3745 East Cudahy Avenue
City of mailing address:	Cudahy
State or Province of mailing address:	Wisconsin
Country of mailing address:	US
Postal or Zip Code of mailing address:	53110

Status:	Full Capacity
Given Name:	Christopher S.
Family Name:	Hoppe
City of Residence:	Cedarburg
State or Province of Residence:	Wisconsin
Country of Residence:	US
Street of mailing address:	302 Stonefield Drive
City of mailing address:	Cedarburg
State or Province of mailing address:	Wisconsin

Country of mailing address:	US
Postal or Zip Code of mailing address:	53012

Status:	Full Capacity
Given Name:	Steven W.
Family Name:	Hyma
City of Residence:	Milwaukee
State or Province of Residence:	Wisconsin
Country of Residence:	US
Street of mailing address:	1312 East Warnimont Avenue
City of mailing address:	Milwaukee
State or Province of mailing address:	Wisconsin
Country of mailing address:	US
Postal or Zip Code of mailing address:	53207

Correspondence Information

Correspondence Customer Number:	142078
E-Mail address:	ipadmin@reinhartlaw.com

Representative Information

Representative Customer Number:	142078	

Domestic Priority Information

Application:	Continuity Type:	Prior Application No.:	Parent Filing Date:	Prior Application Status:	Patent No.:
This Application	Is a continuation of	17/391,904	August 2, 2021	Pending	N/A
17/391,904	Is a continuation of	17/132,609	December 23, 2020	Pending	N/A
17/132,609	Is a continuation of	17/064,371	October 6, 2020	Pending	N/A
17/064,371	Is a continuation of	16/752,441	January 24, 2020	Patented	11,008,136
16/752,441	Is a continuation of	16/216,724	December 11, 2018	Patented	10,583,962
16/216,724	Is a continuation of	15/826,232	November 29, 2017	Patented	10,703,534
15/826,232	Is a continuation of	PCT/IL2017/050481	April 30, 2017	Expired	N/A
PCT/IL2017/050481	Claims the benefit under 35 U.S.C. 119(e)	62/459,076	February 15, 2017	Expired	N/A
PCT/IL2017/050481	Claims the benefit under 35 U.S.C. 119(e)	62/330,334	May 2, 2016	Expired	N/A

Foreign Priority Information

Country:	Application number:	Filing Date:	Priority Claimed:

Statement under 37 CFR 1.55 or 1.78 for AIA (First Inventor to File) Transition Applications

☐ **This application (1) claims priority to or the benefit of an application filed before March 16, 2013 and (2) also contains, or contained at any time, a claim to a claimed invention that has an effective filing date on or after March 16, 2013.**

NOTE: By providing this statement under 37 CFR 1.55 or 1.78, this application, with a filing date on or after March 16, 2013, will be examined under the first inventor to file provisions of the AIA.

Authorization or Opt-Out of Authorization to Permit Access:

When this Application Data Sheet is properly signed and filed with the application, applicant has provided written authority to permit a participating foreign intellectual property (IP) office access to the instant application-as-filed (see paragraph A in subsection 1 below) and the European Patent Office (EPO) access to any search results from the instant application (see paragraph B in subsection 1 below).

Should applicant choose not to provide an authorization identified in subsection 1 below, applicant **must opt-out** of the authorization by checking the corresponding box A or B or both in subsection 2 below.

NOTE: This section of the Application Data Sheet is **ONLY** reviewed and processed with the **INITIAL** filing of an application. After the initial filing of an application, an Application Data Sheet cannot be used to provide or rescind authorization for access by a foreign IP office(s). Instead, Form PTO/SB/39 or PTO/SB/69 must be used as appropriate.

1. Authorization to Permit Access by a Foreign Intellectual Property Office(s)

A. Priority Document Exchange (PDX) - Unless box A in subsection 2 (opt-out of authorization) is checked, the undersigned hereby **grants the USPTO authority** to provide the European Patent Office (EPO), the Japan Patent Office (JPO), the Korean Intellectual Property Office (KIPO), the State Intellectual Property Office of the People's Republic of China (SIPO), the World Intellectual Property Organization (WIPO), and any other foreign intellectual property office participating with the USPTO in a bilateral or multilateral priority document exchange agreement in which a foreign application claiming priority to the instant patent application is filed, access to: (1) the instant patent application-as-filed and its related bibliographic data, (2) any foreign or

domestic application to which priority or benefit is claimed by the instant application and its related bibliographic data, and (3) the date of filing of this Authorization. See 37 CFR 1.14(h)(1). **B. <u>Search Results from U.S. Application to EPO</u>** - Unless box B in subsection 2 (opt-out of authorization) is checked, the undersigned hereby **<u>grants the USPTO authority</u>** to provide the EPO access to the bibliographic data and search results from the instant patent application when a European patent application claiming priority to the instant patent application is filed. See 37 CFR 1.14(h)(2). The applicant is reminded that the EPO's Rule 141(1) EPC (European Patent Convention) requires applicants to submit a copy of search results from the instant application without delay in a European patent application that claims priority to the instant application.
2. Opt-Out of Authorizations to Permit Access by a Foreign Intellectual Property Office(s) **[ ]** A. Applicant **<u>DOES NOT</u>** authorize the USPTO to permit a participating foreign IP office access to the instant application-as-filed. If this box is checked, the USPTO will not be providing a participating foreign IP office with any documents and information identified in subsection 1A above. **[ ]** B. Applicant **<u>DOES NOT</u>** authorize the USPTO to transmit to the EPO any search results from the instant patent application. If this box is checked, the USPTO will not be providing the EPO with search results from the instant application. **NOTE:** Once the application has published or is otherwise publicly available, the USPTO may provide access to the application in accordance with 37 CFR 1.14.

Applicant Information

Applicant 1:

[X] Assignee	**[ ] Legal Representative under 35 U.S.C. 117**	**[ ] Person to whom the inventor is obligated to assign**	**[ ] Person who shows sufficient proprietary interest**
If applicant is the legal representative, indicate the authority to file the patent application, the inventor is:			
Name of the Deceased or Legally Incapacitated Inventor:			
If the Assignee is an Organization check here [X]			

Organization Name:	Milwaukee Electric Tool Corporation
13135 West Lisbon Road Brookfield, Wisconsin 53005	

Applicant 2:

[X] Assignee	[ ] Legal Representative under 35 U.S.C. 117	[ ] Person to whom the inventor is obligated to assign	[ ] Person who shows sufficient proprietary interest
If applicant is the legal representative, indicate the authority to file the patent application, the inventor is:			
Name of the Deceased or Legally Incapacitated Inventor:			
If the Assignee is an Organization check here [X]			

Organization Name:	Keter Plastic LTD.
2 Sapir Street Herzelyia, Isreal 4685206	

Signature:	/Derek H. Campbell/		Date:	November 29, 2021
First Name:	Derek H.	Last Name:	Campbell	
Registration No.:	70,608			

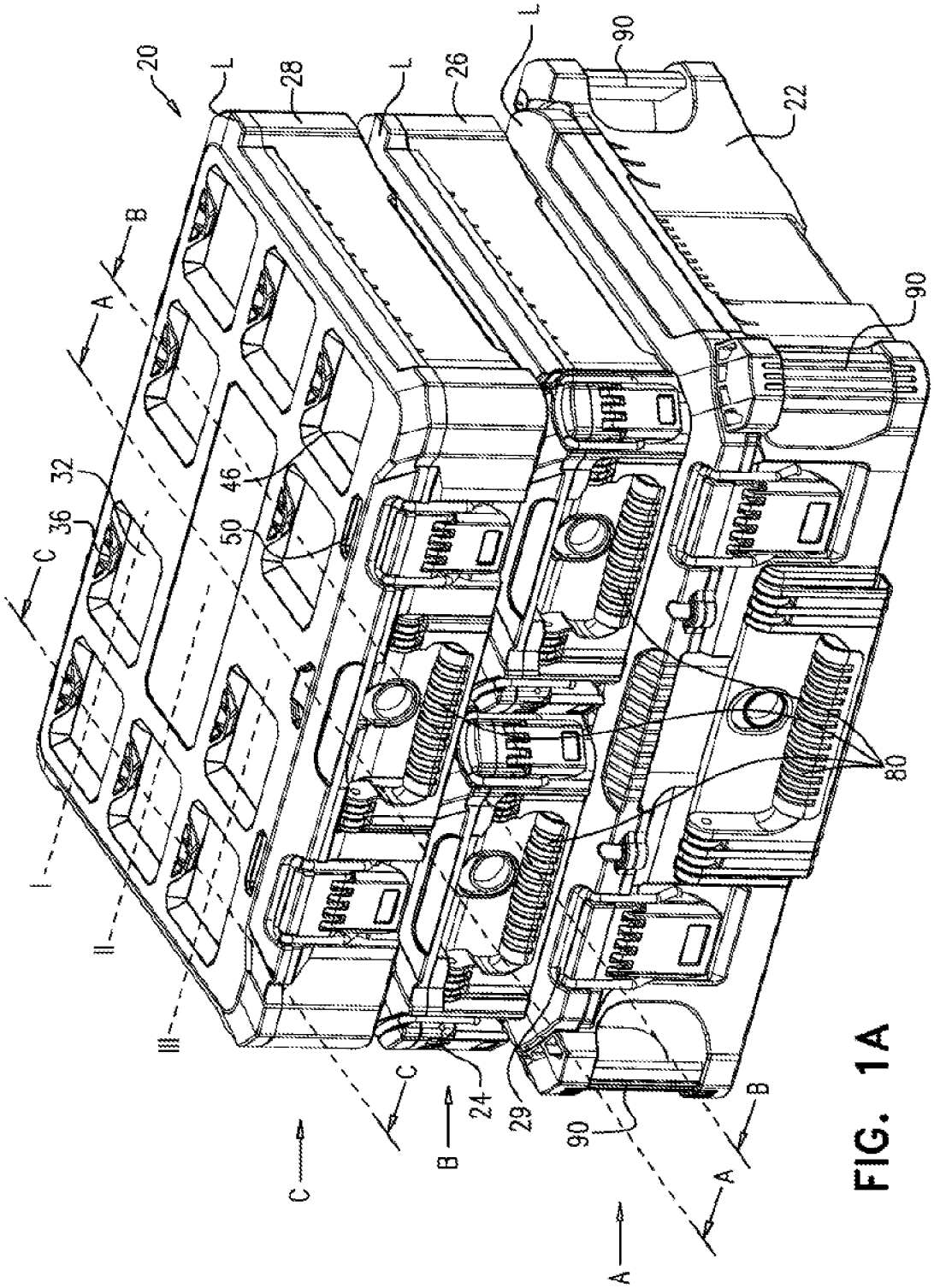

FIG. 1A

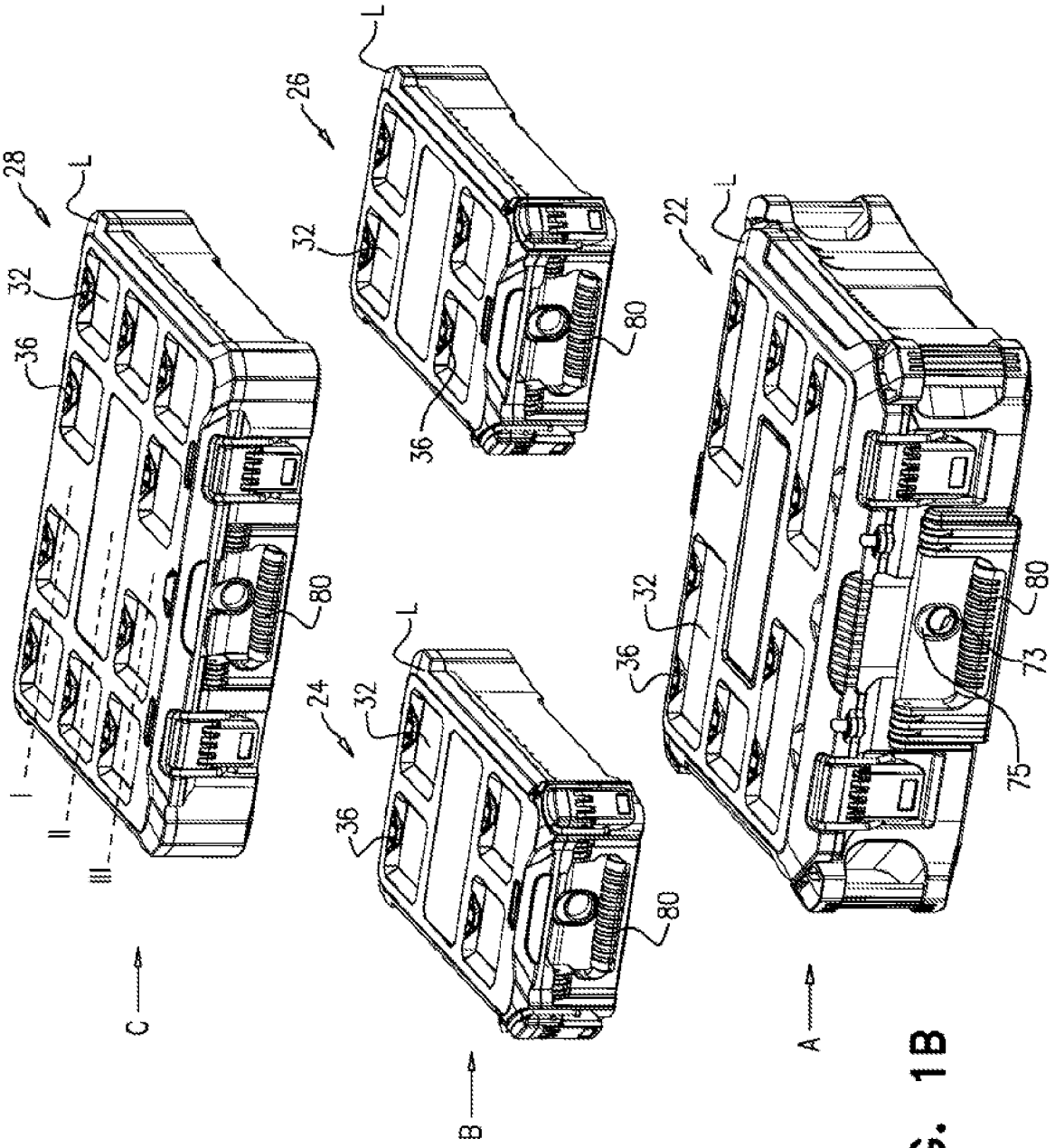

FIG. 1B

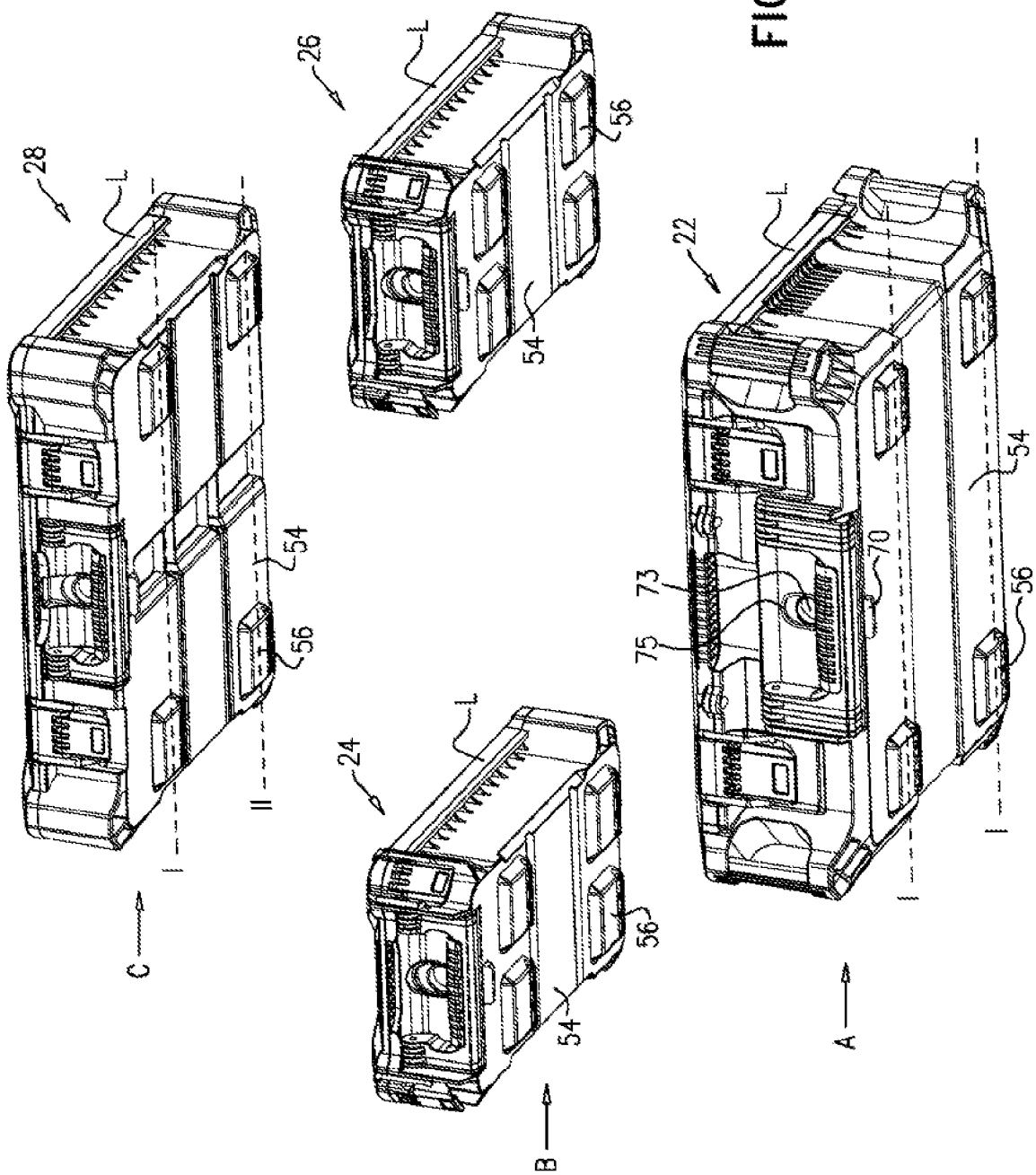

FIG. 1C

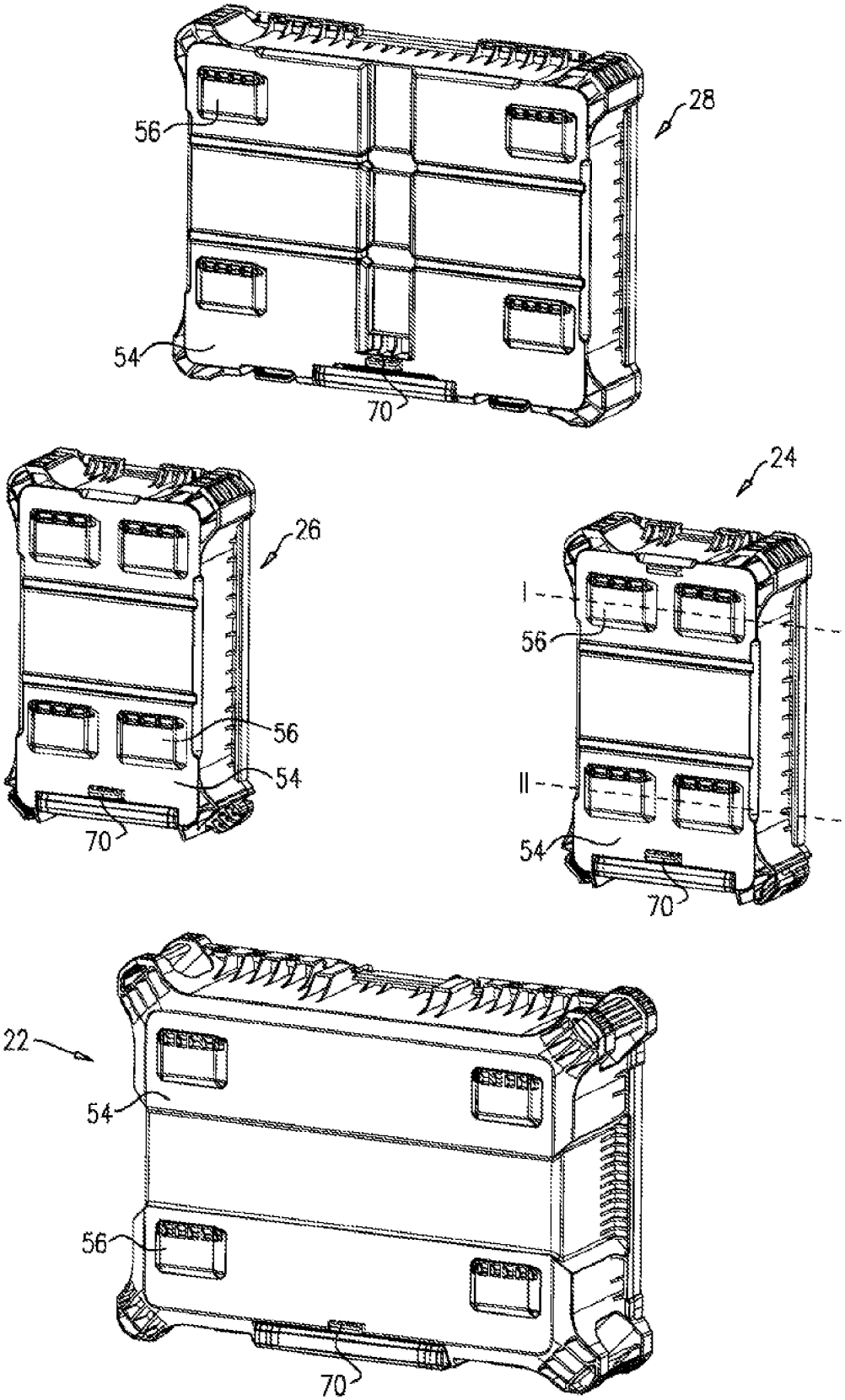

FIG. 1D

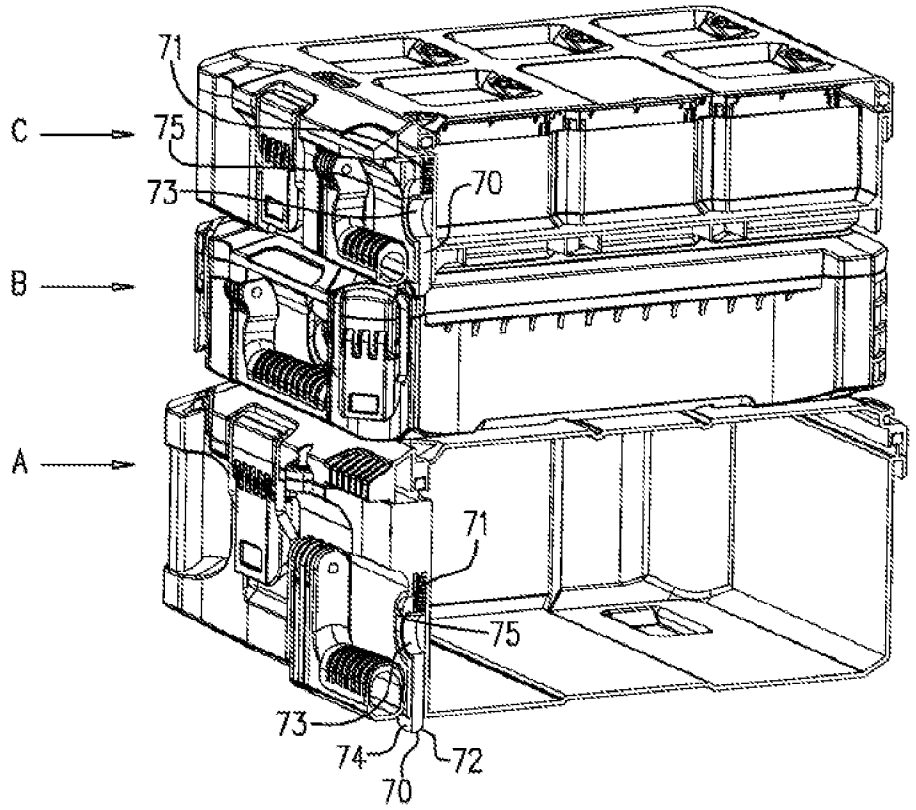

FIG. 2A

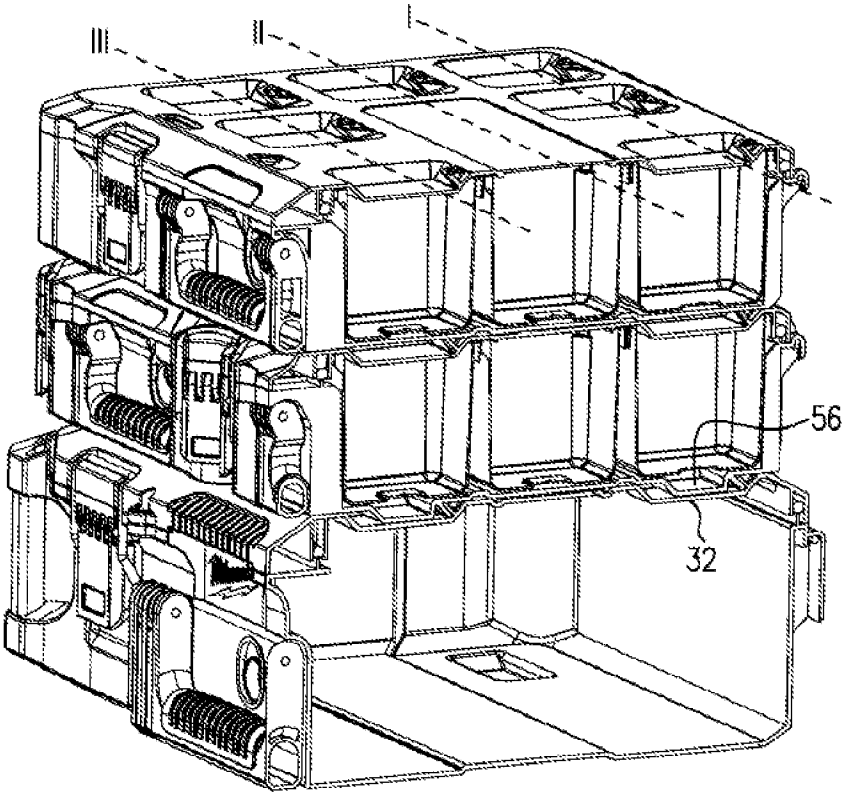

FIG. 2B

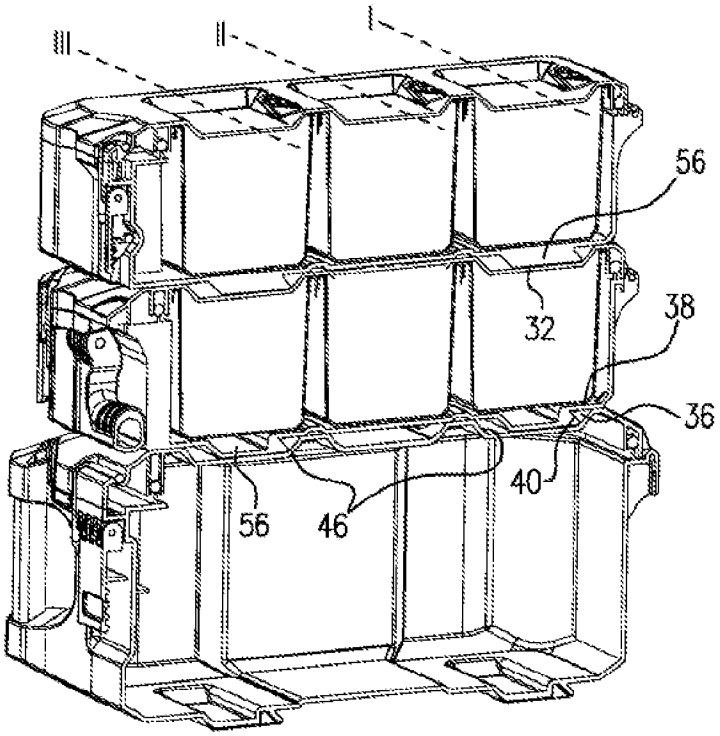

FIG. 2C

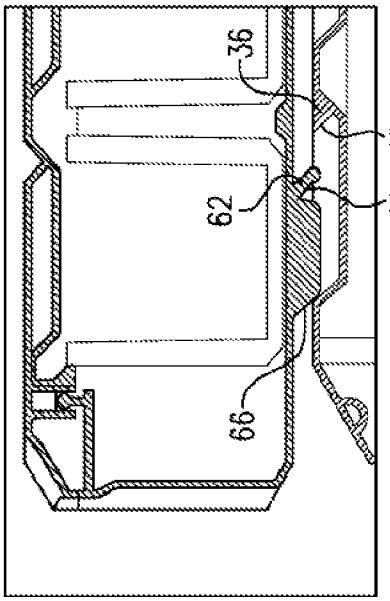

FIG. 3A

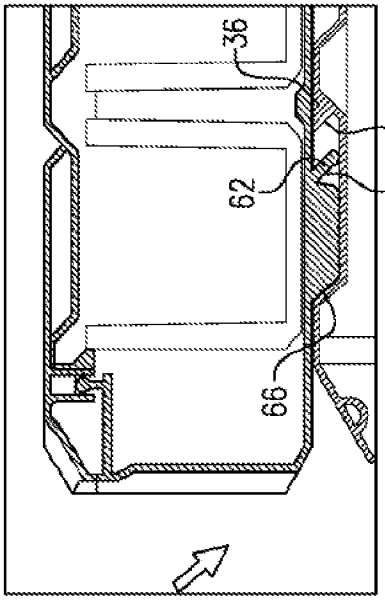

FIG. 3B

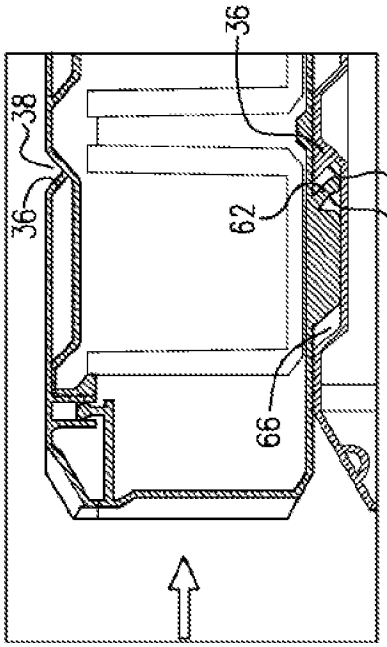

FIG. 3C

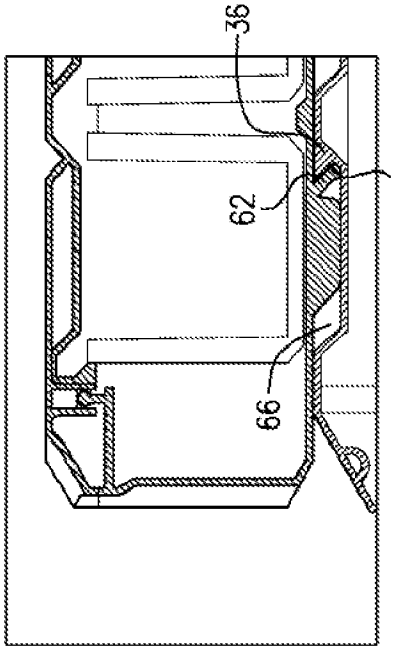

FIG. 3D

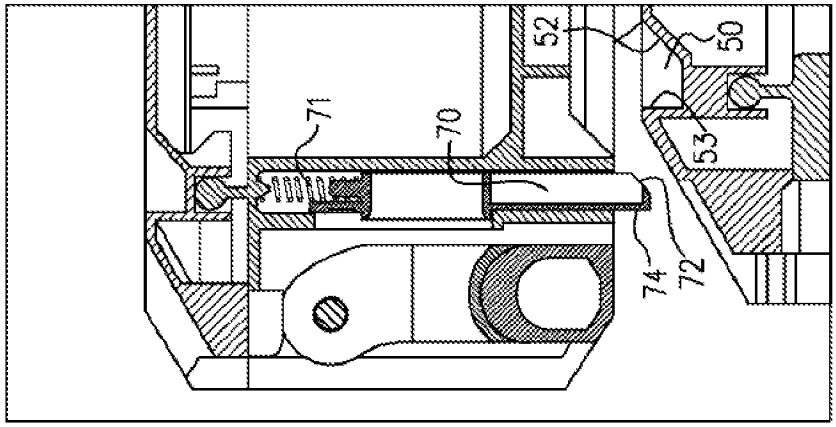

FIG. 4A

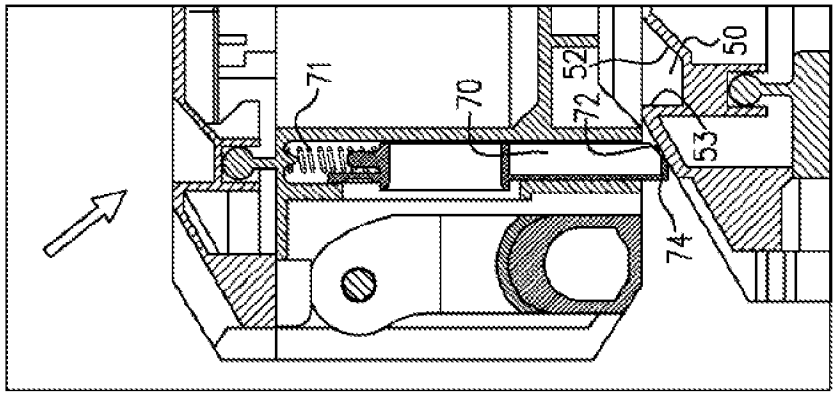

FIG. 4B

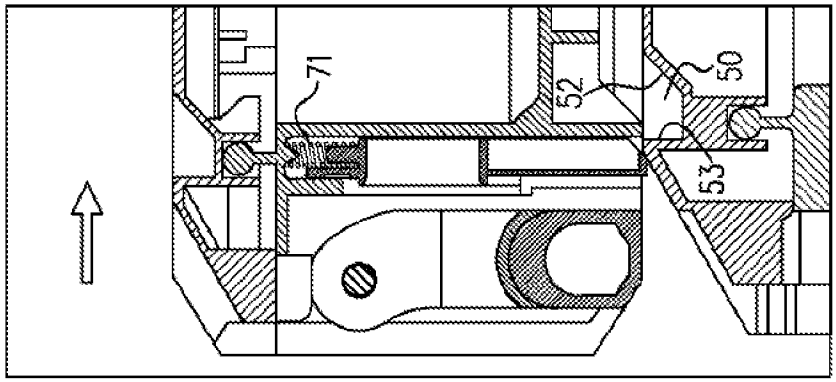

FIG. 4C

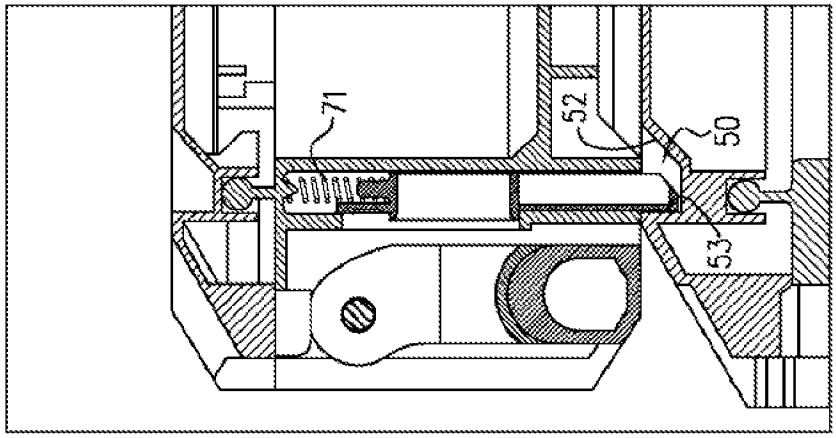

FIG. 4D

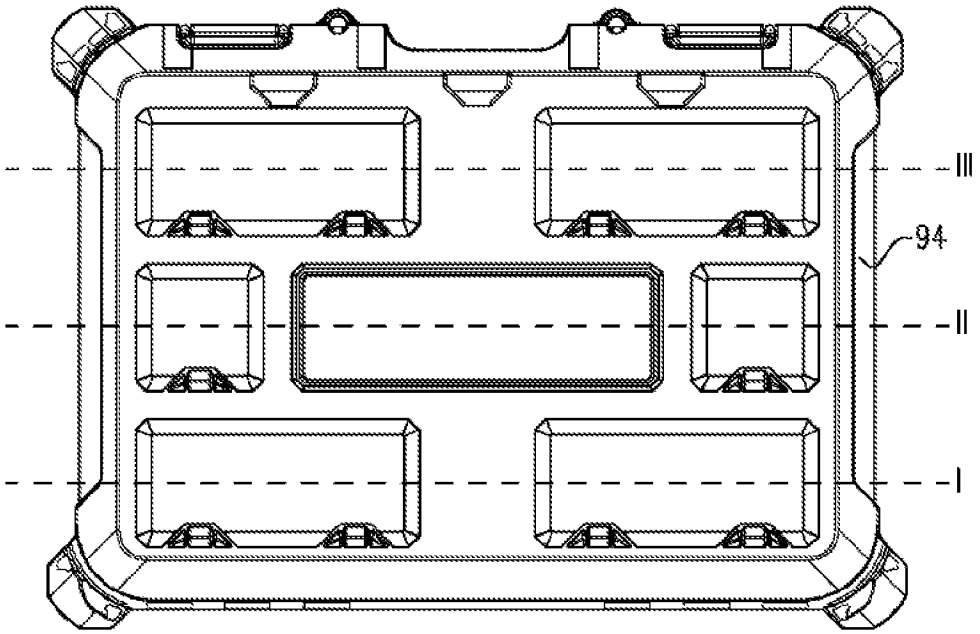

FIG. 5A

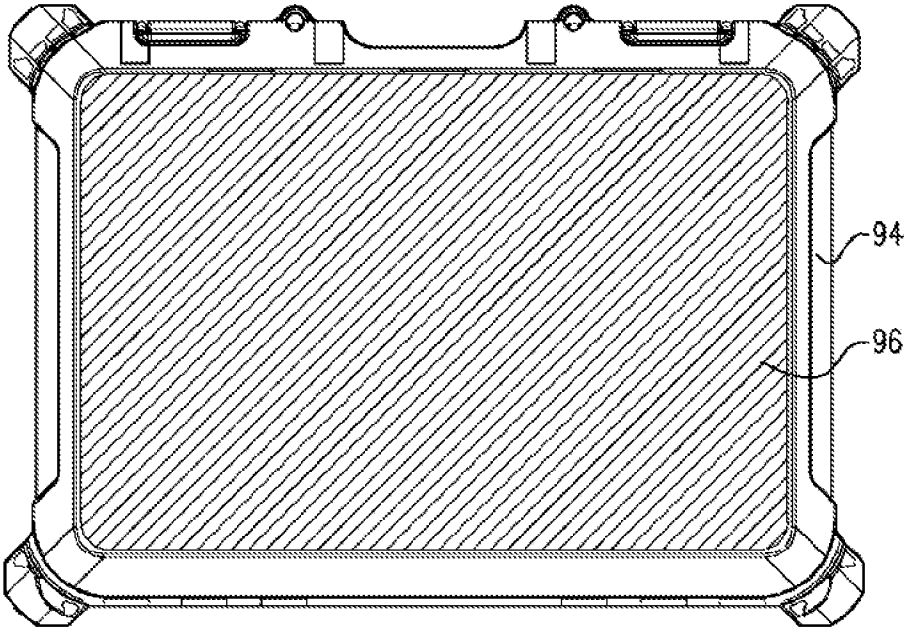

FIG. 5B

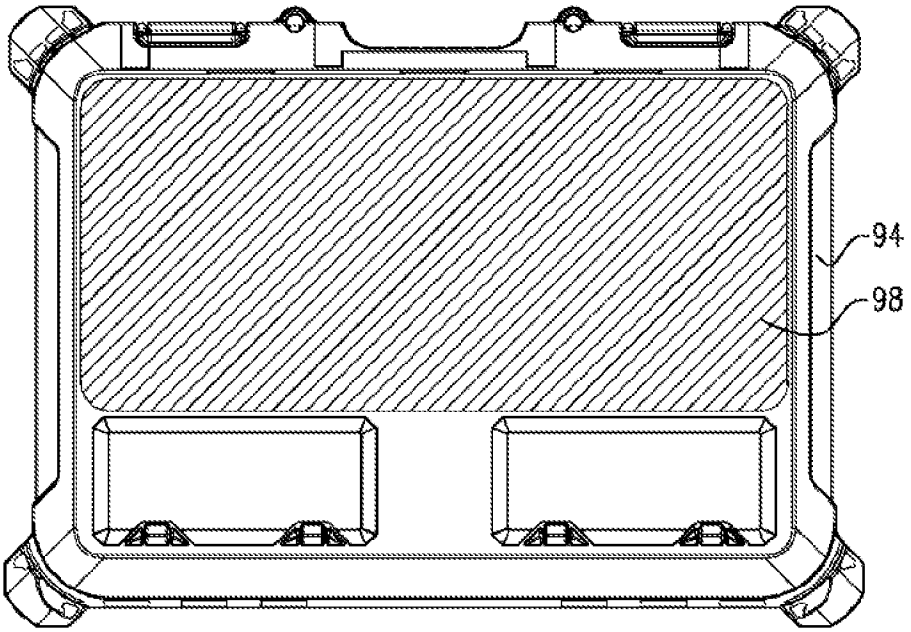

FIG. 5C

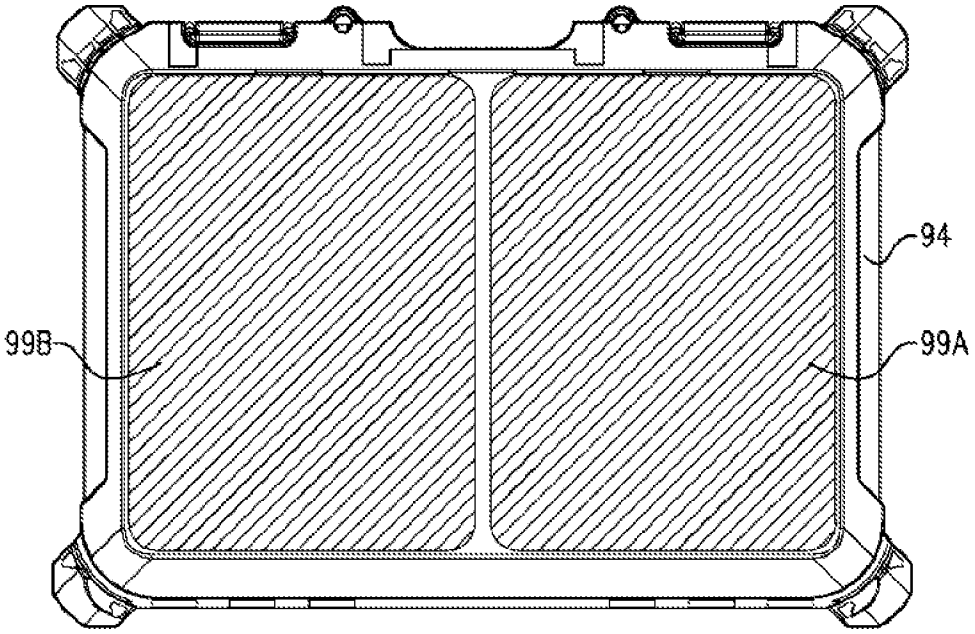

FIG. 5D

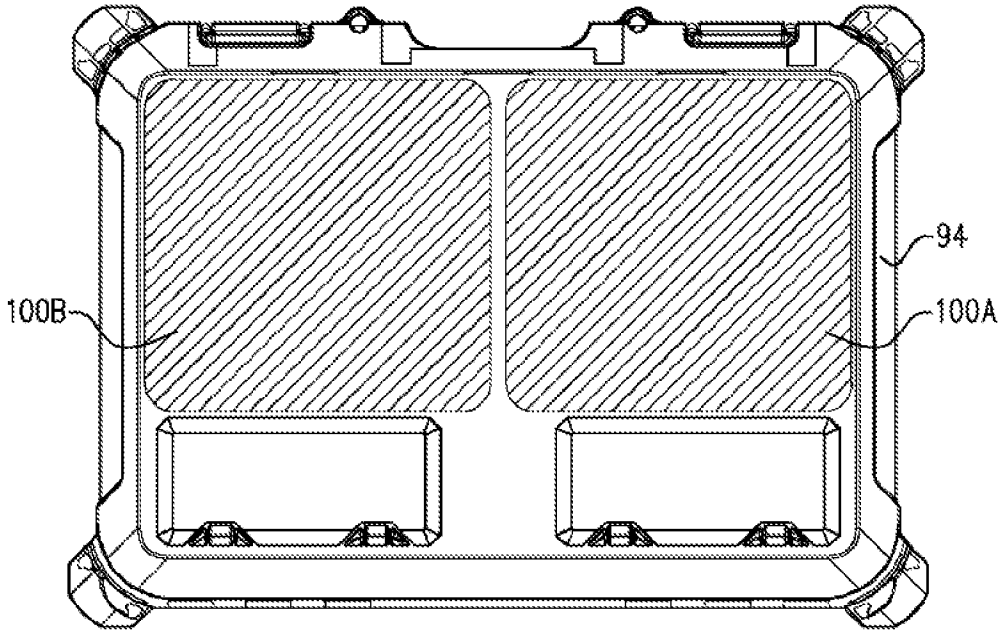

FIG. 5E

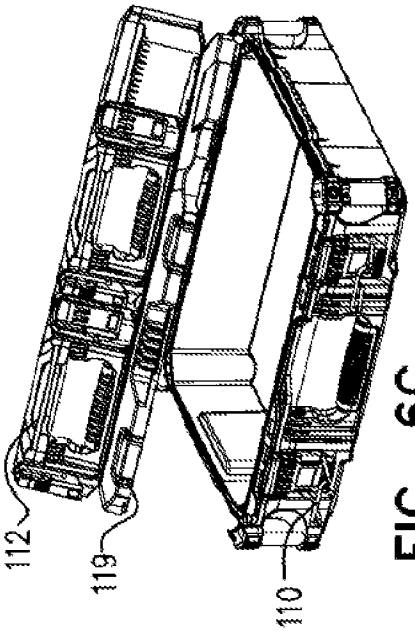

FIG. 6G

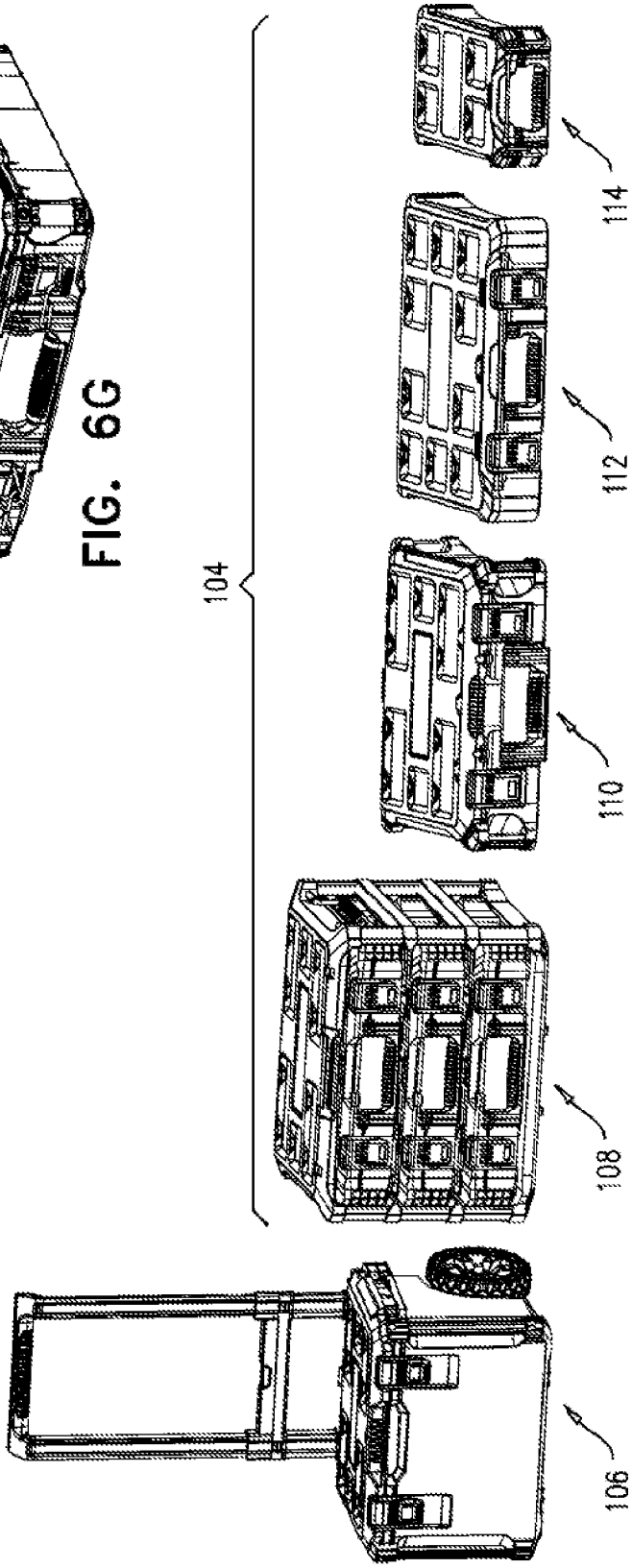

FIG. 6A

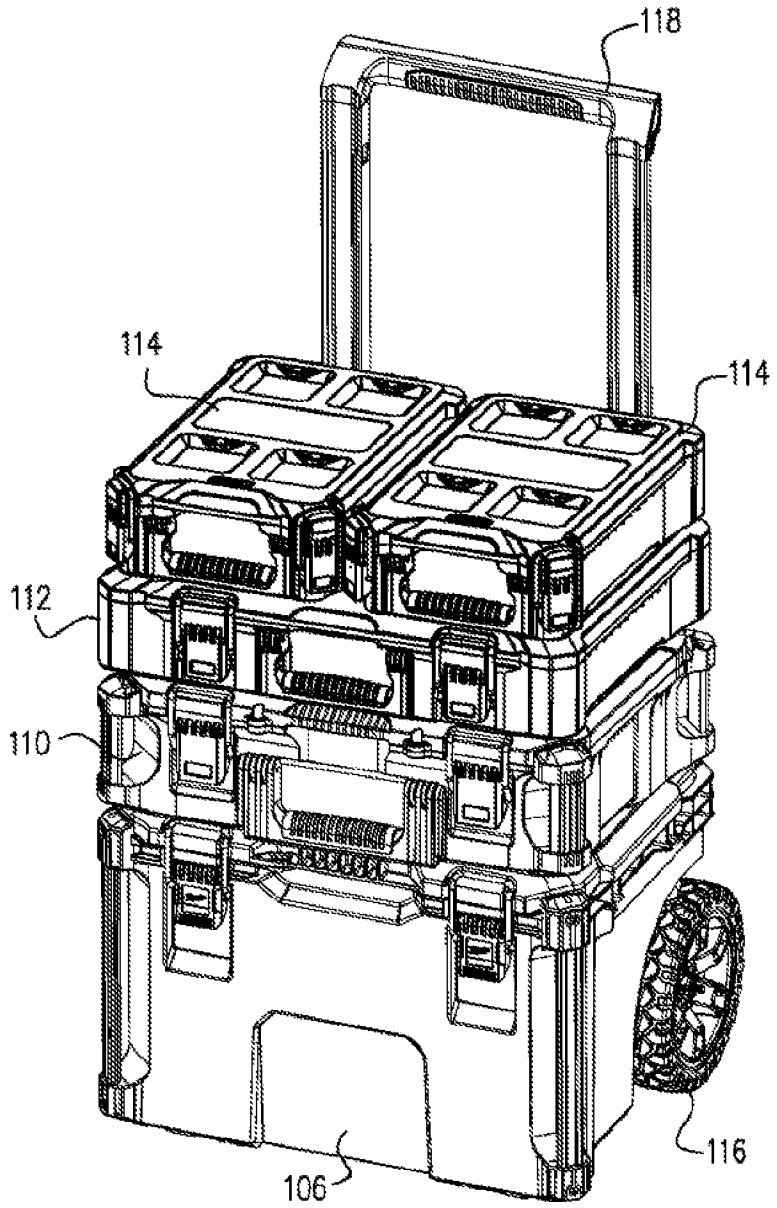

FIG. 6B

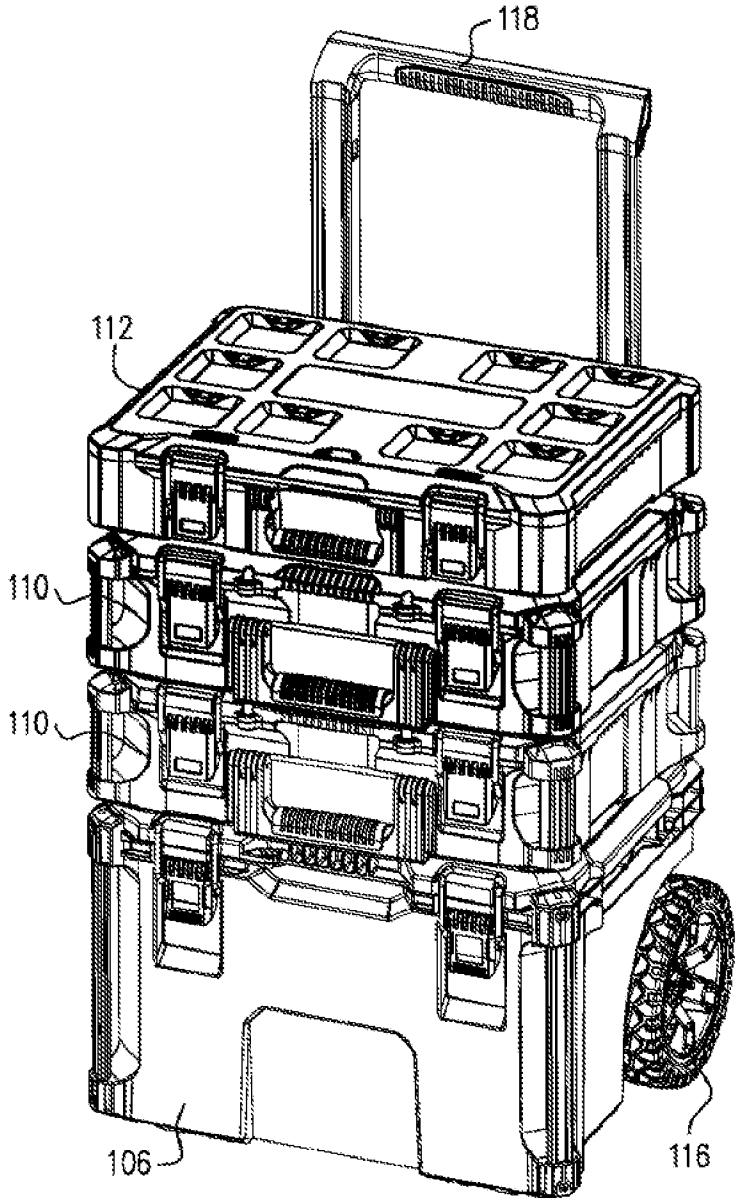

FIG. 6C

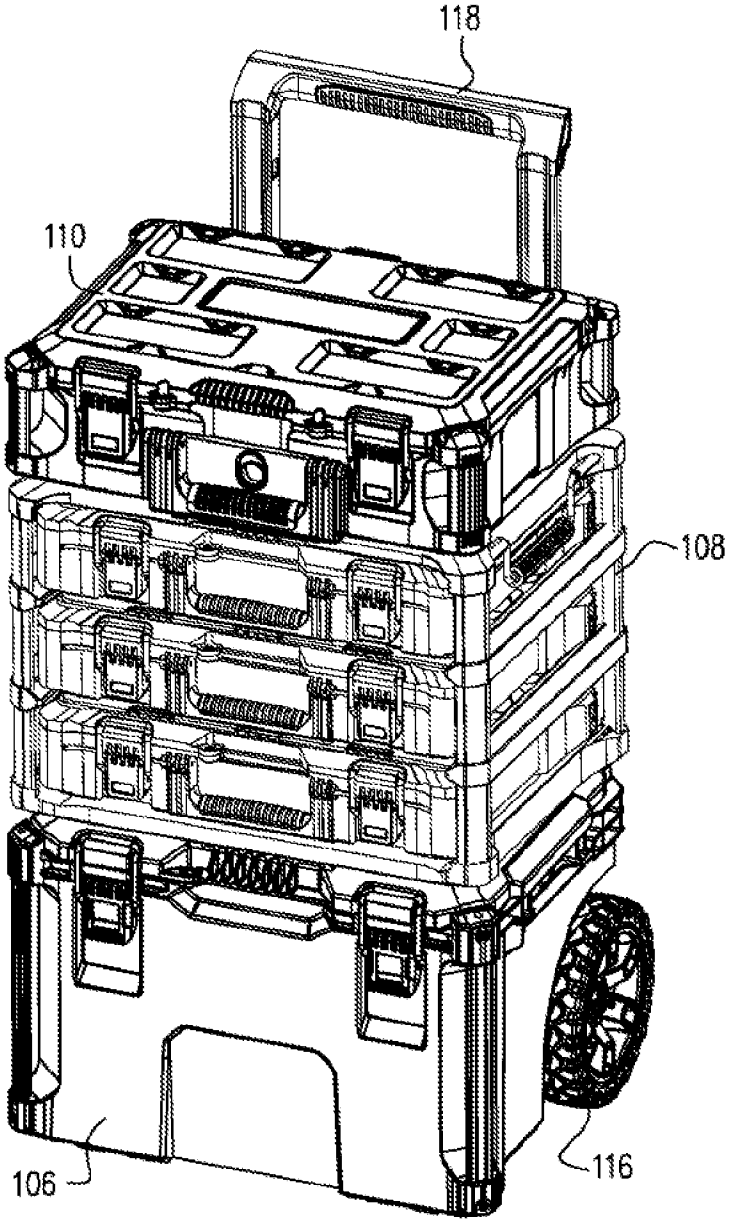

FIG. 6D

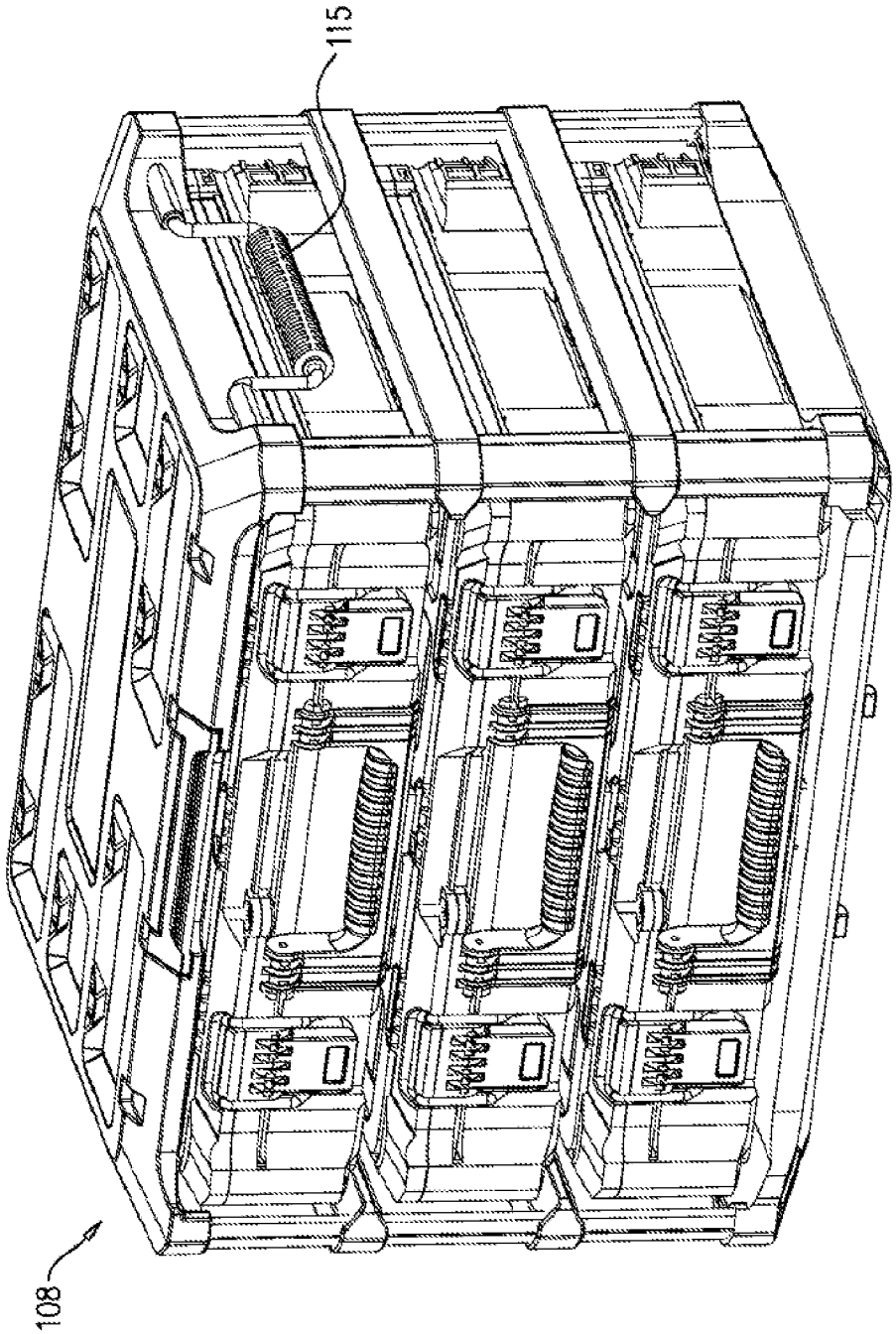

FIG. 6E

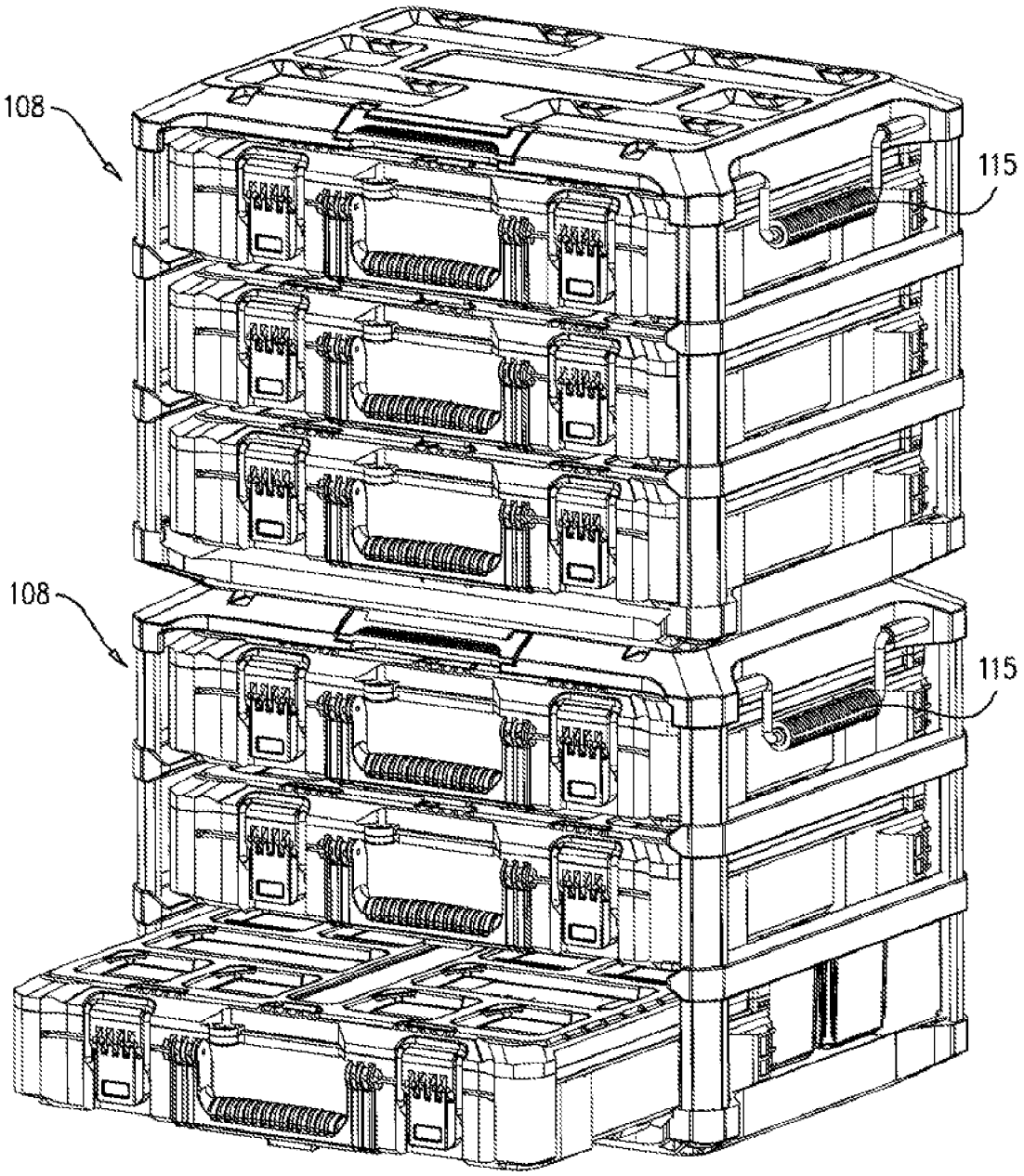

FIG. 6F

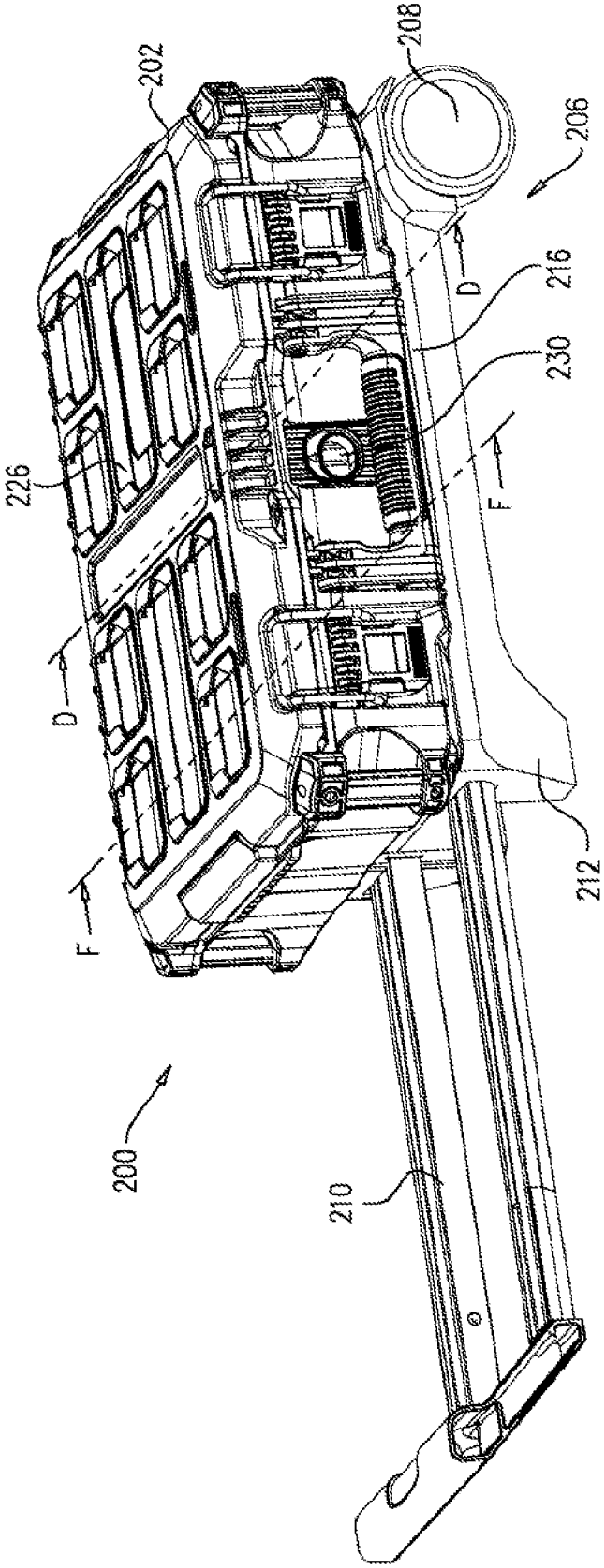

FIG. 7A

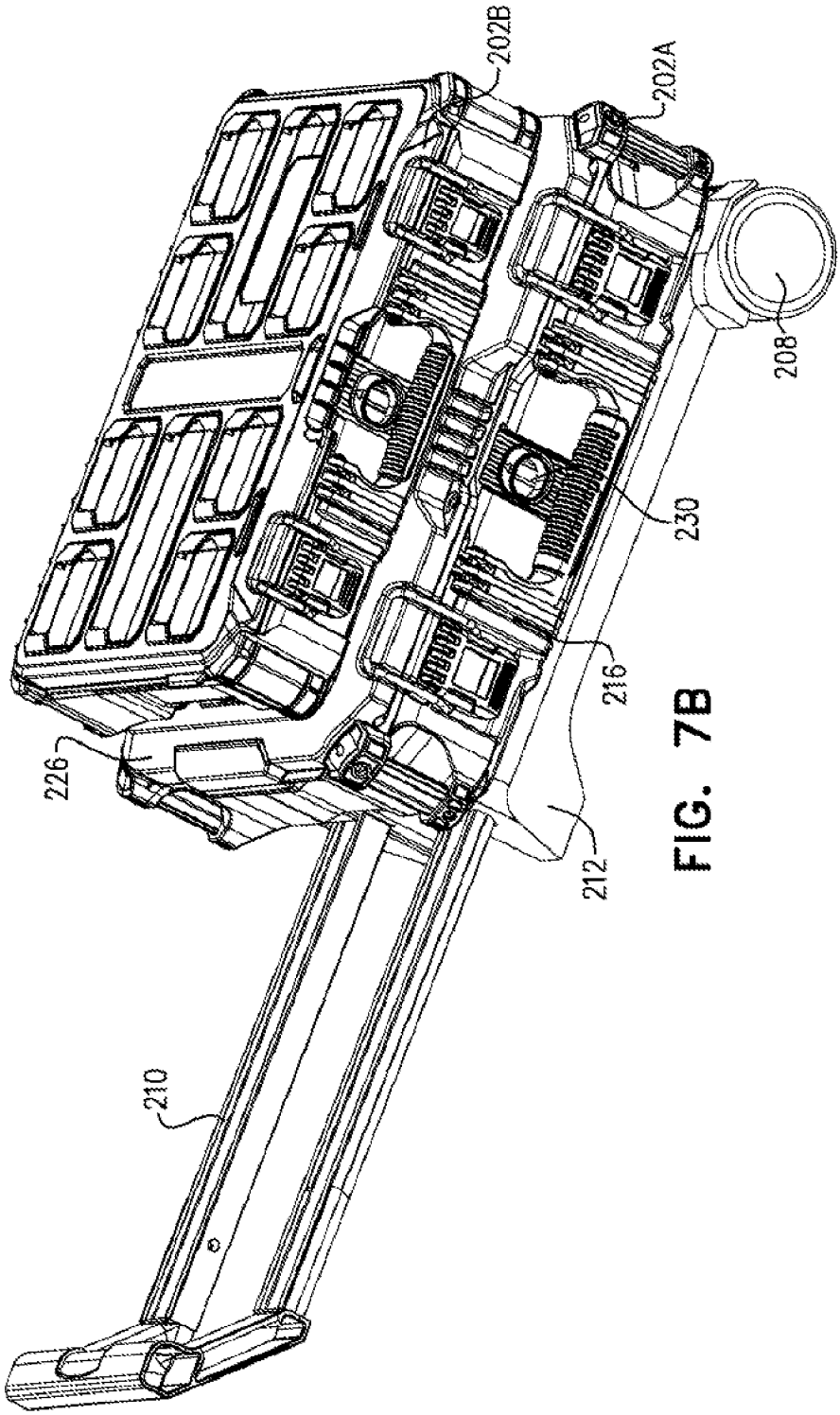

FIG. 7B

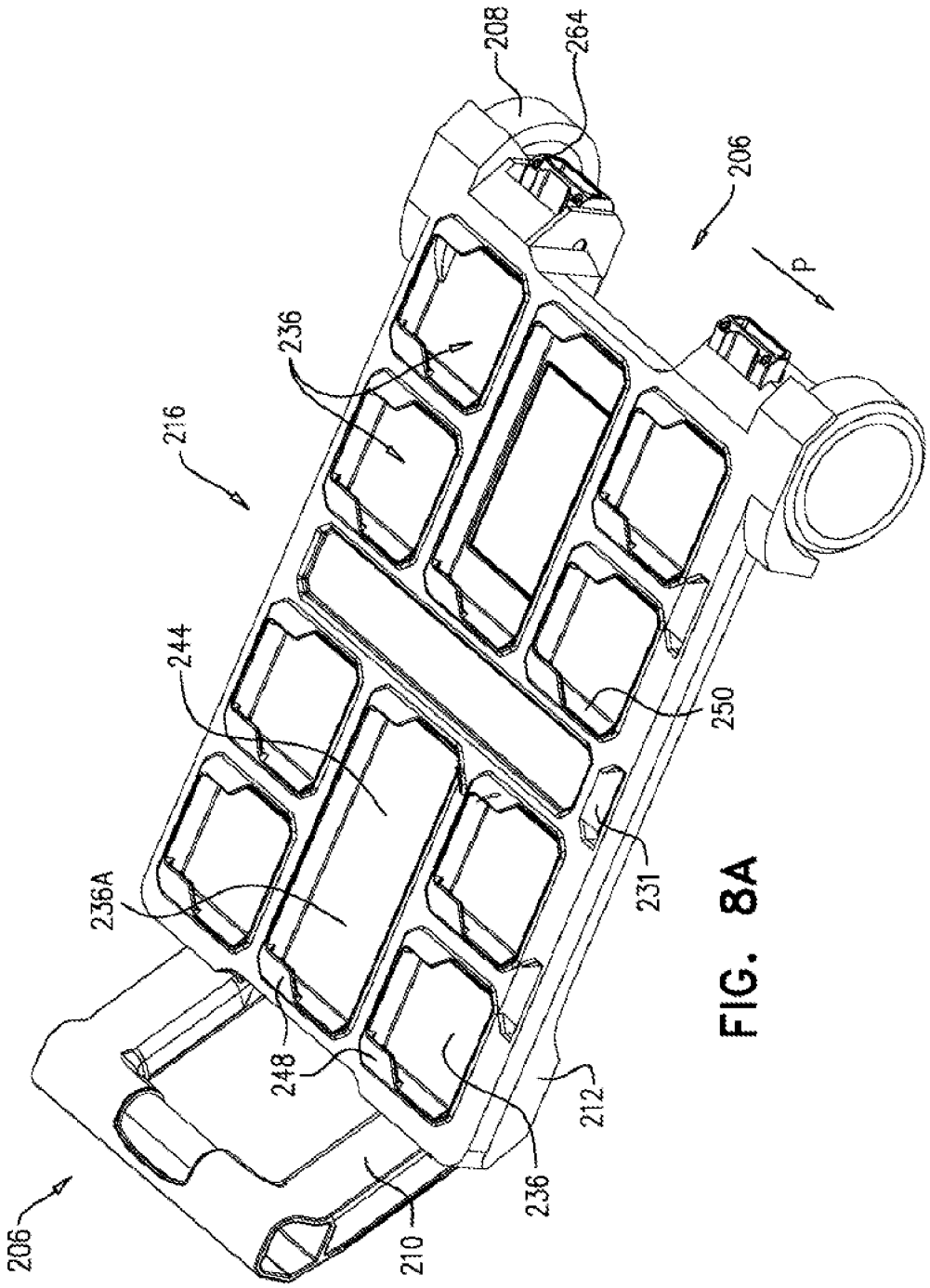

FIG. 8A

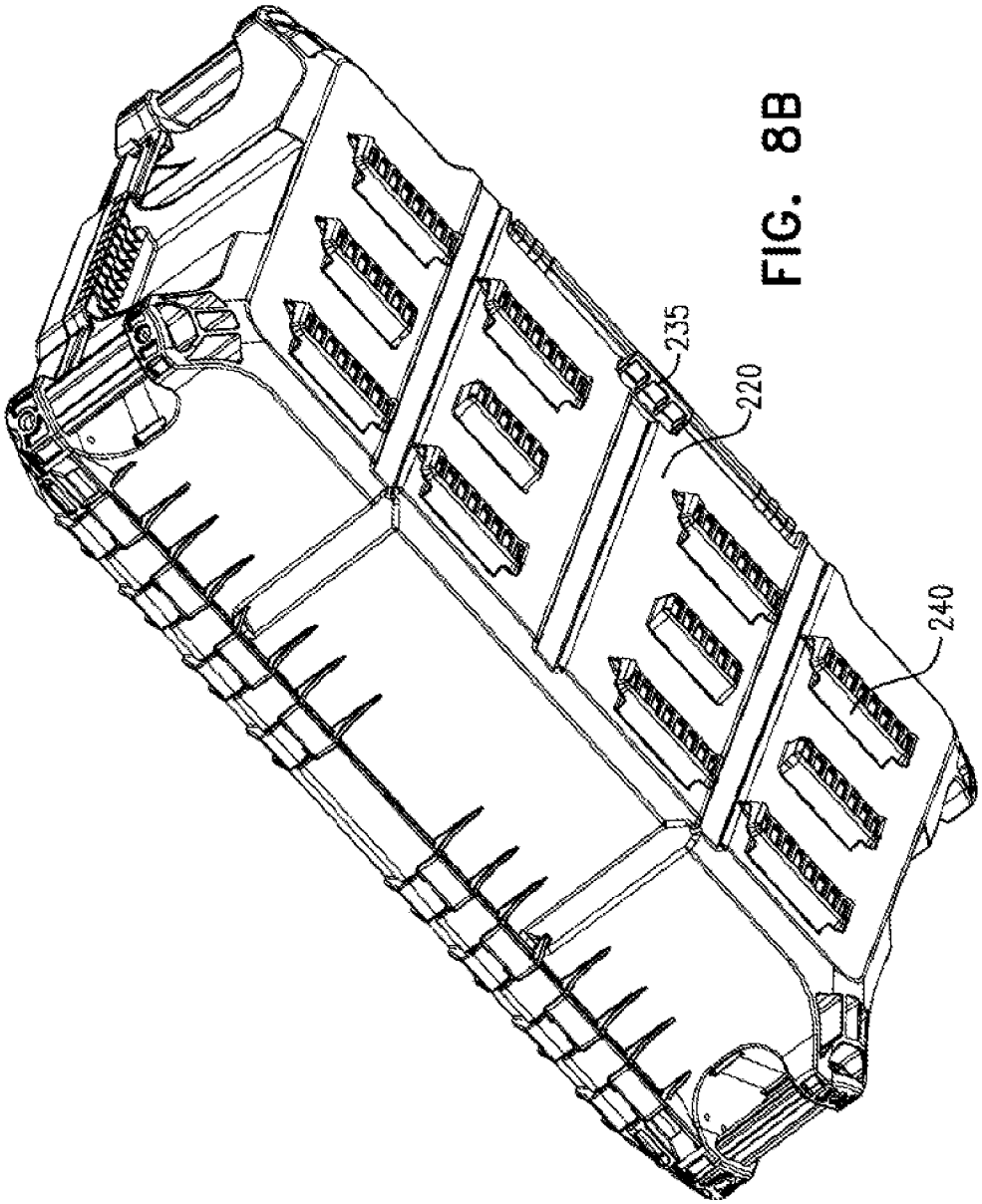

FIG. 8B

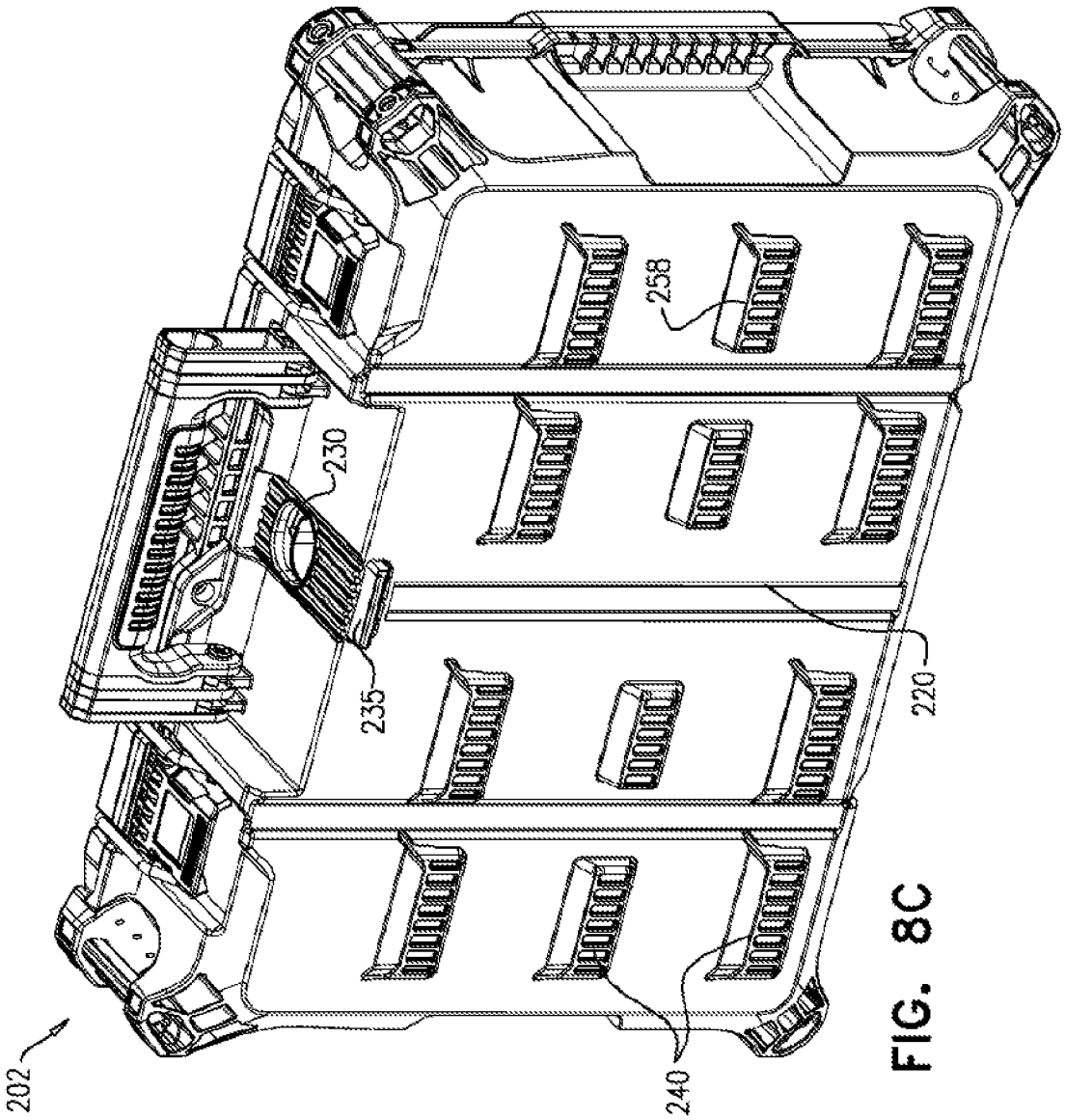

FIG. 8C

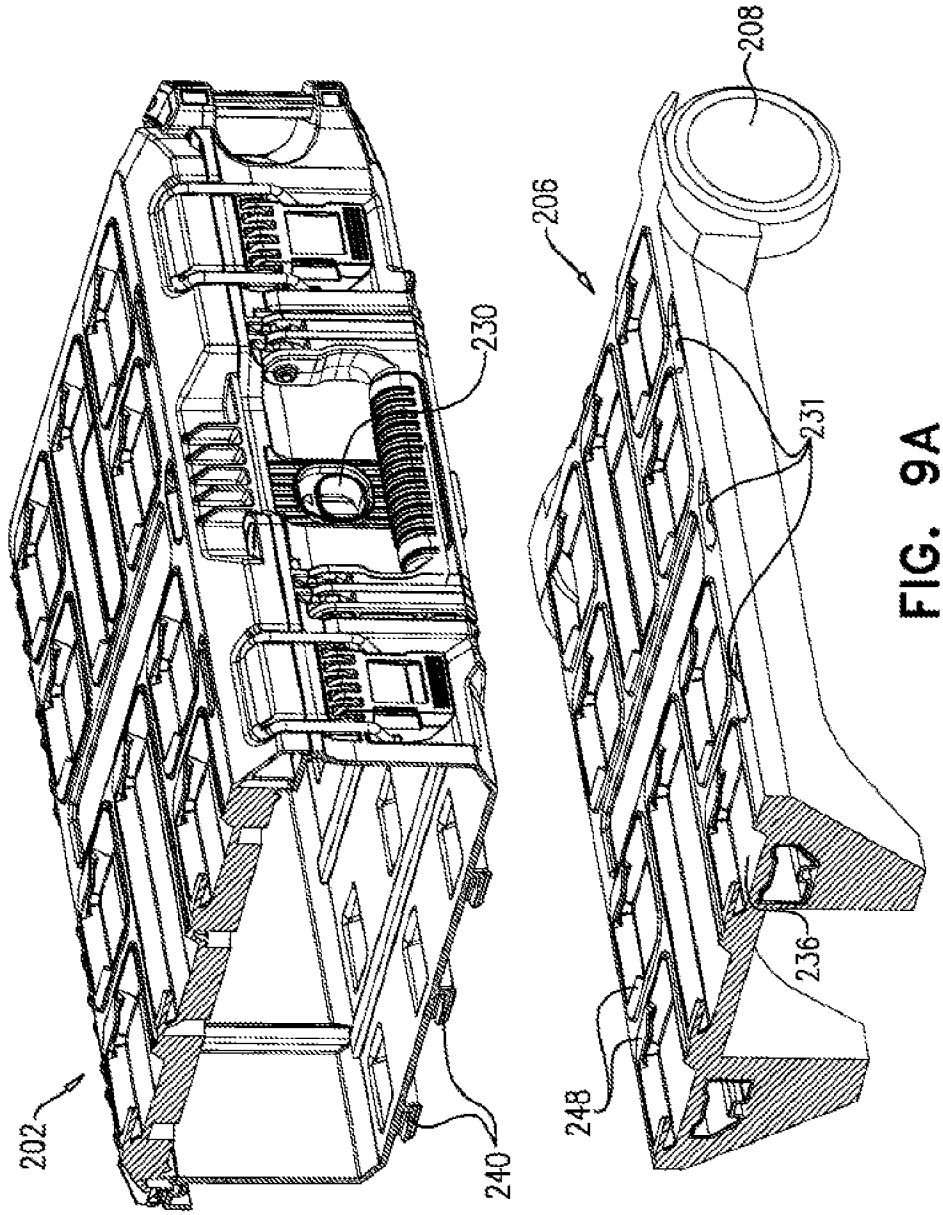

FIG. 9A

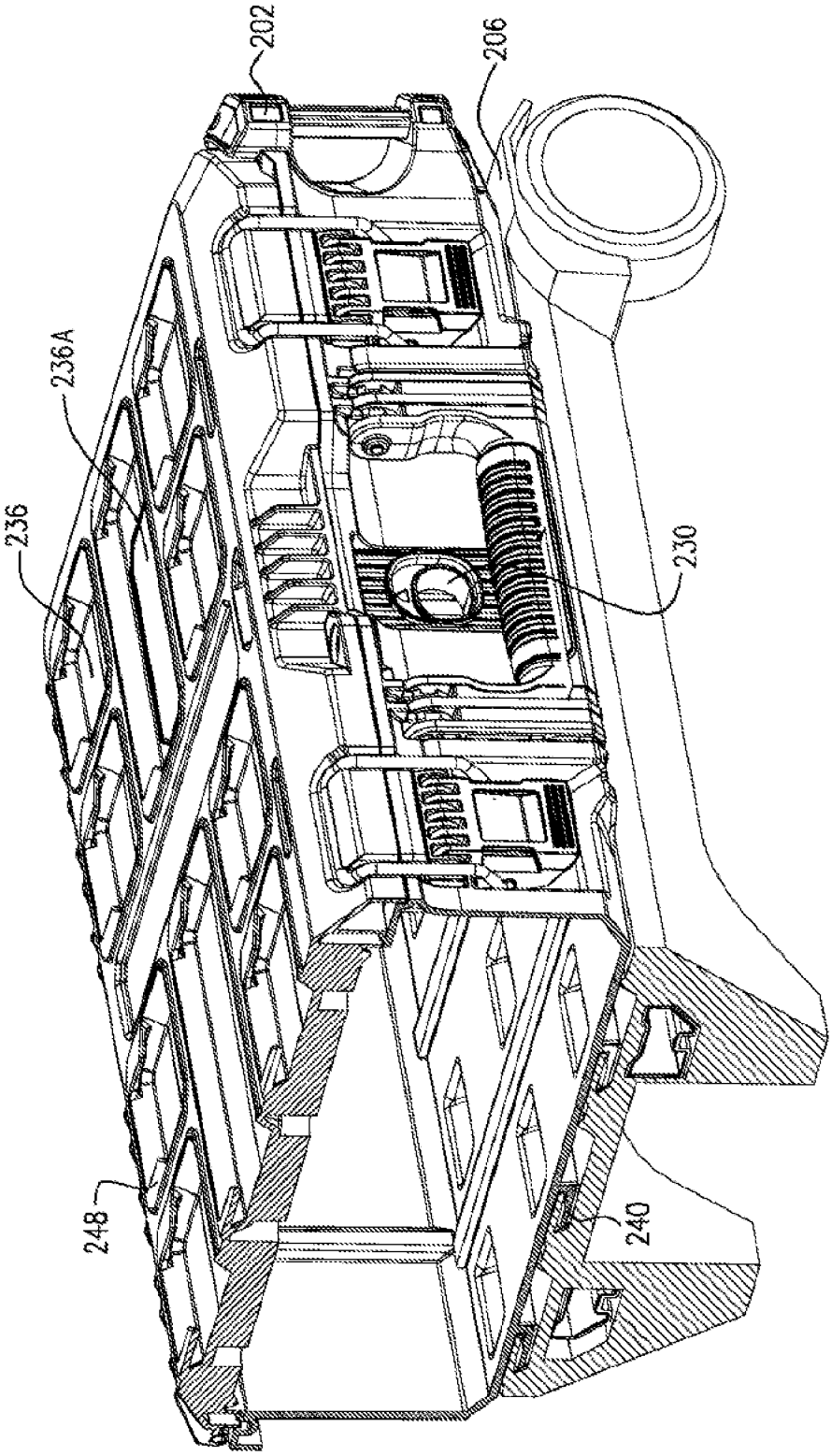

FIG. 9B

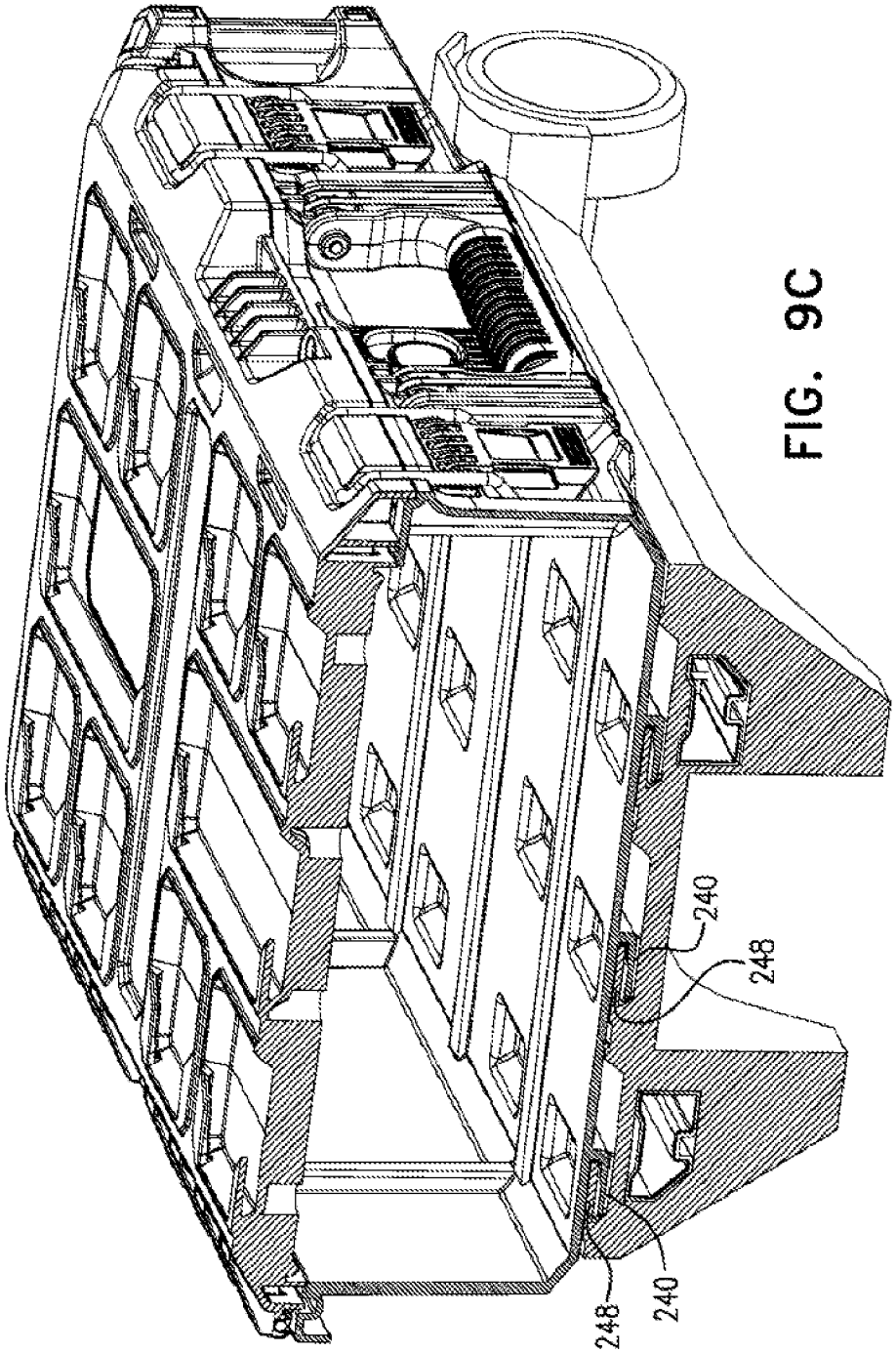

FIG. 9C

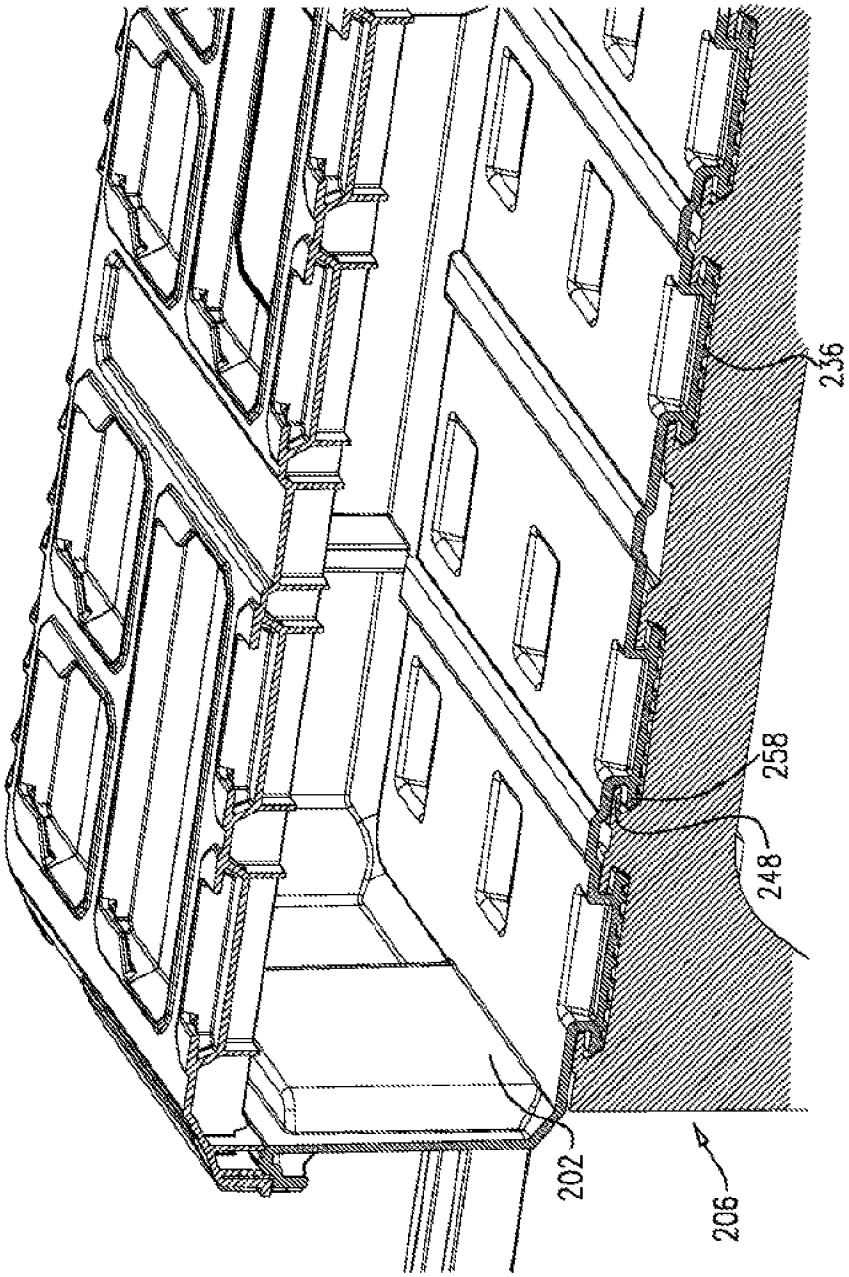

FIG. 9D

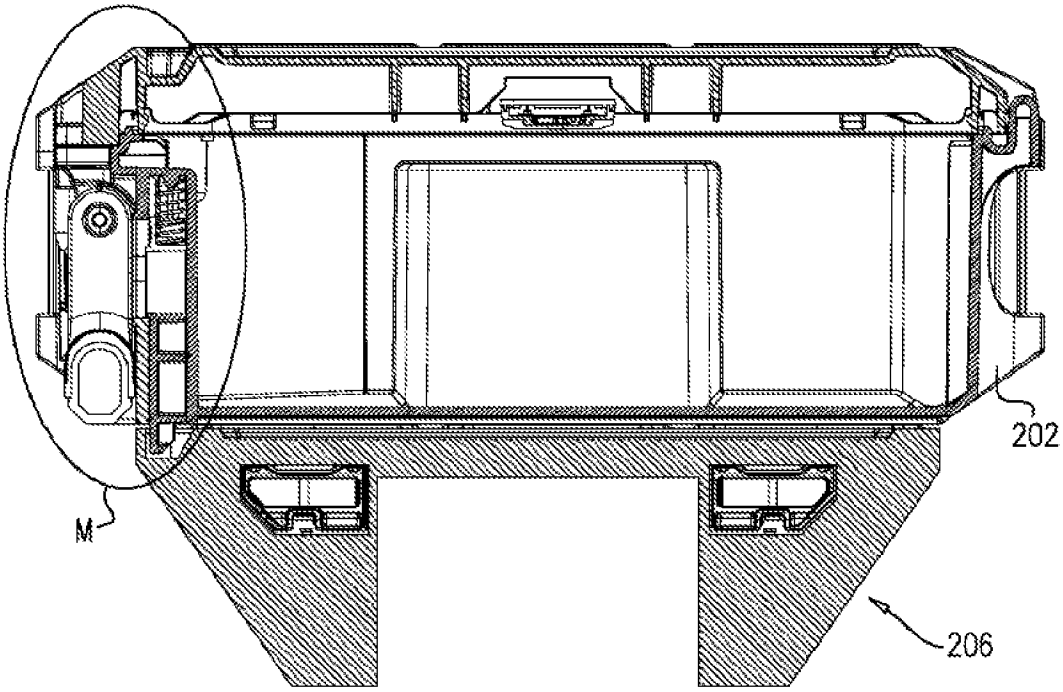

FIG. 10A

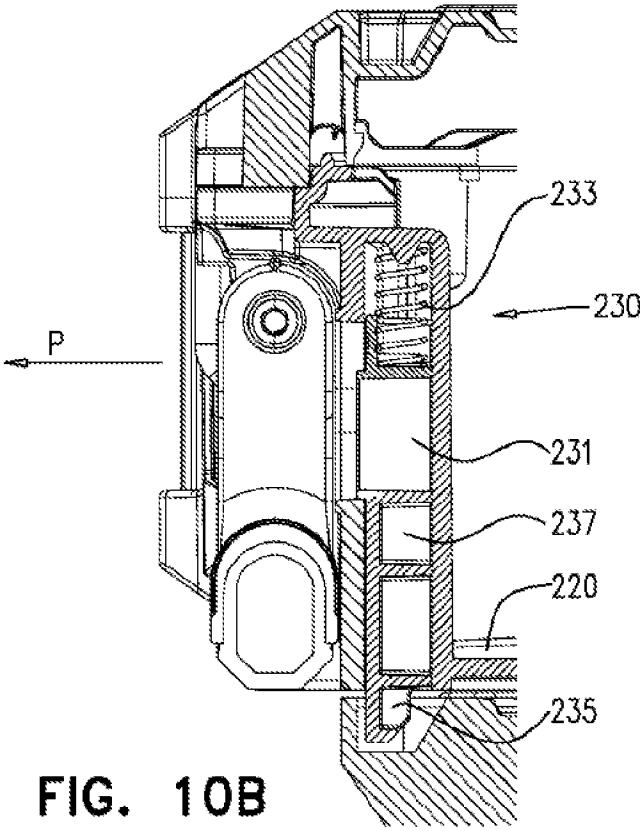

FIG. 10B

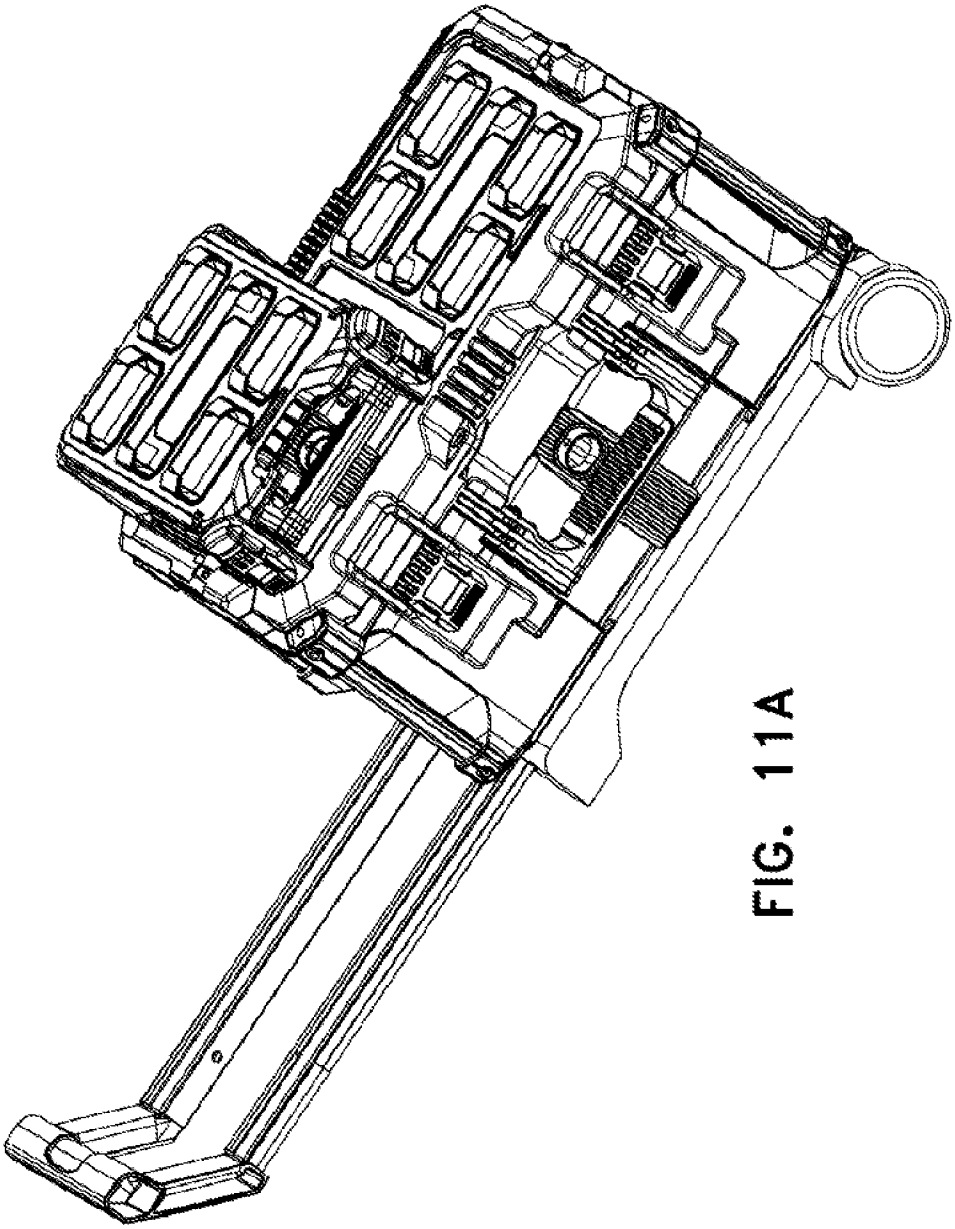

FIG. 11A

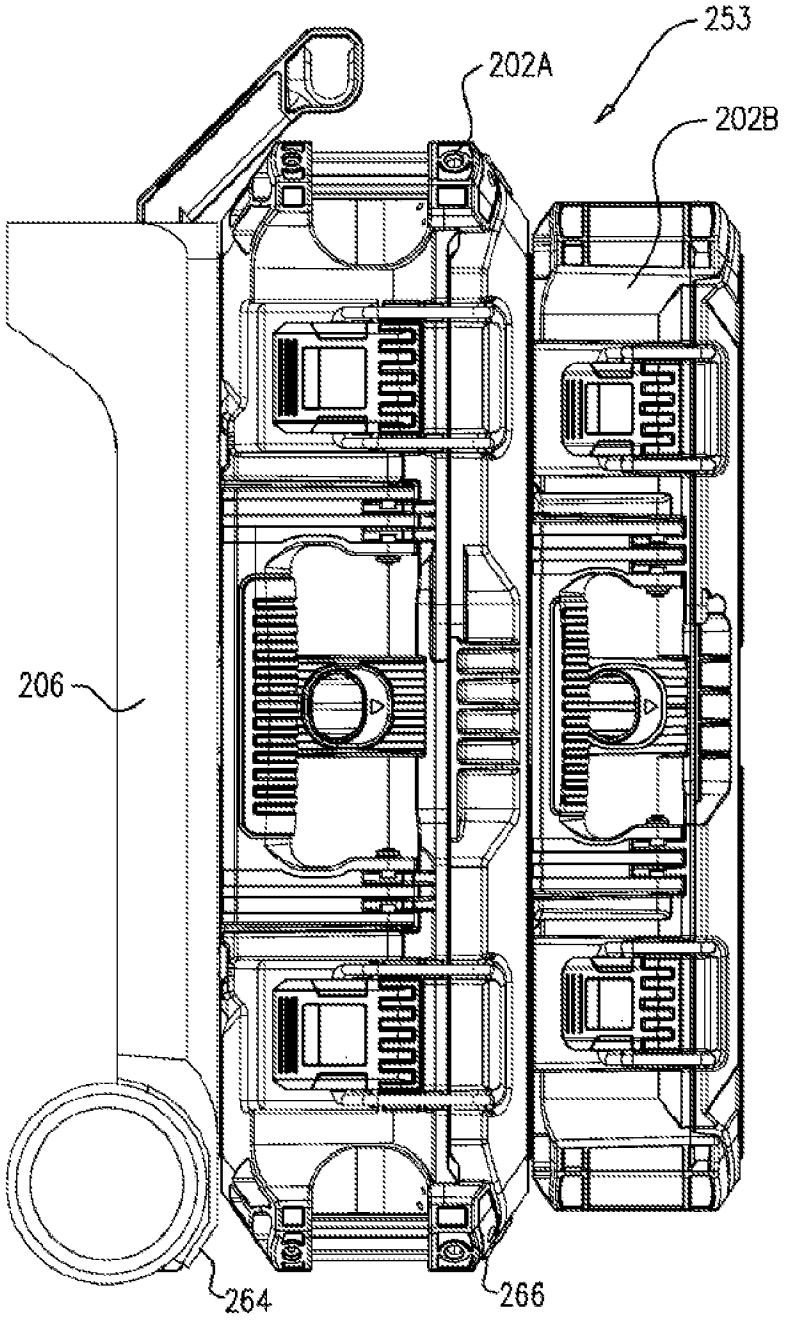

FIG. 11B

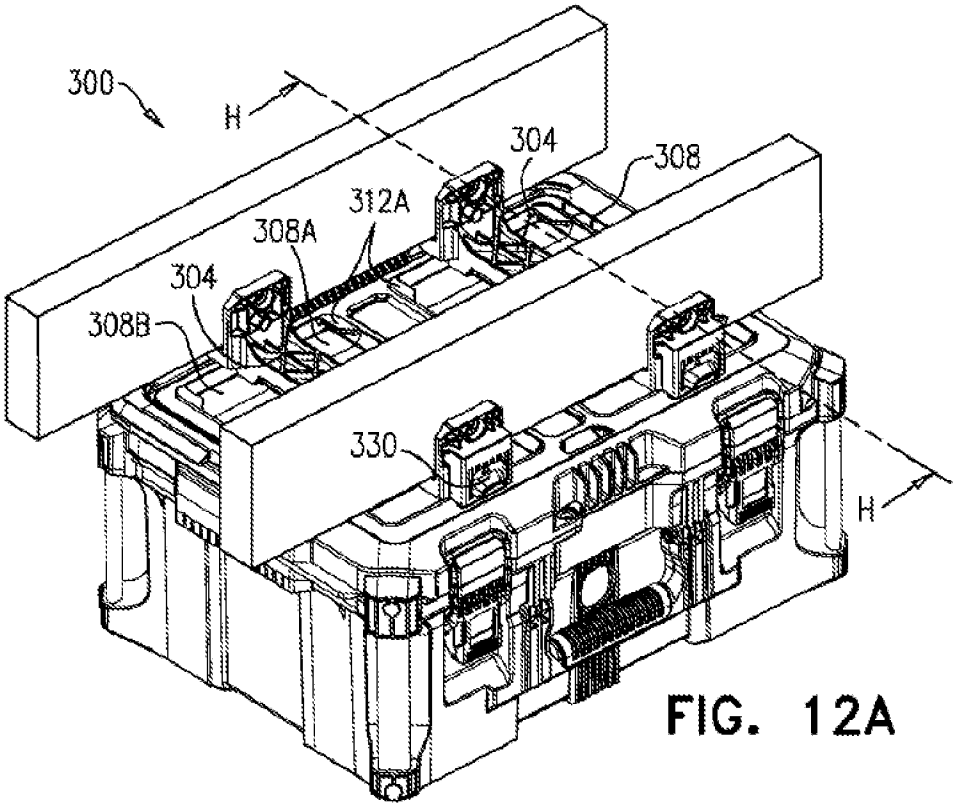

FIG. 12A

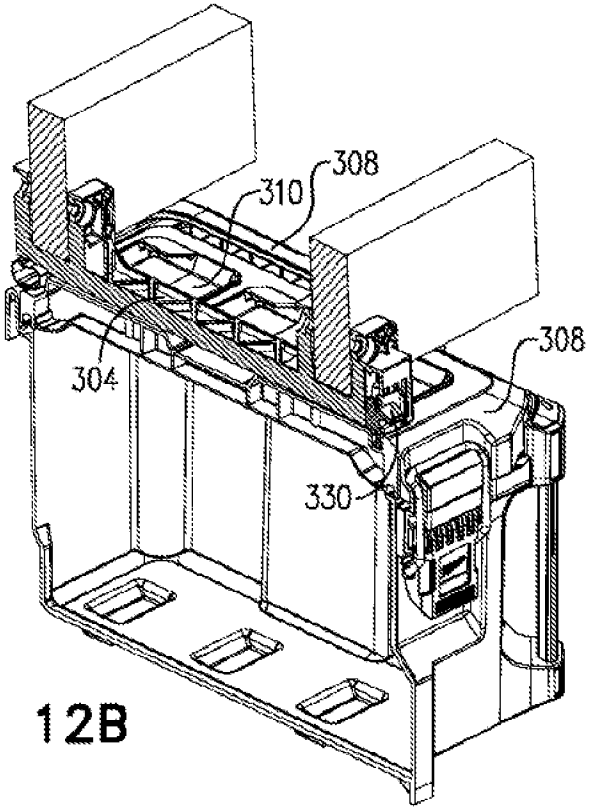

FIG. 12B

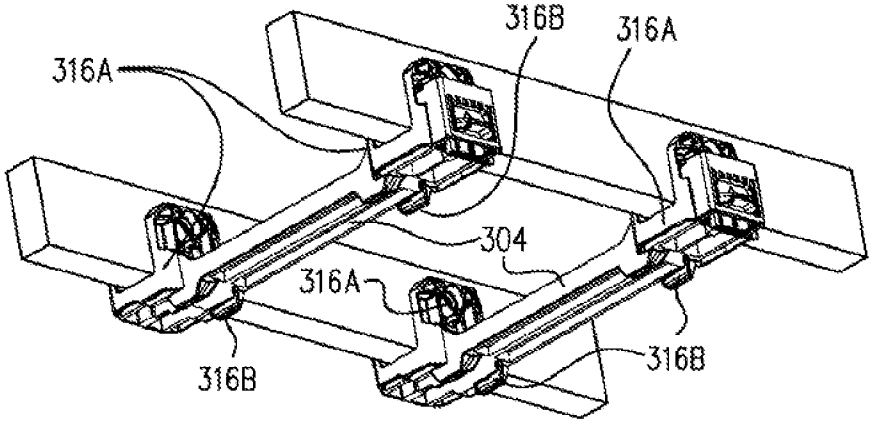
316B
316A
316A
304
316A
316B
316B

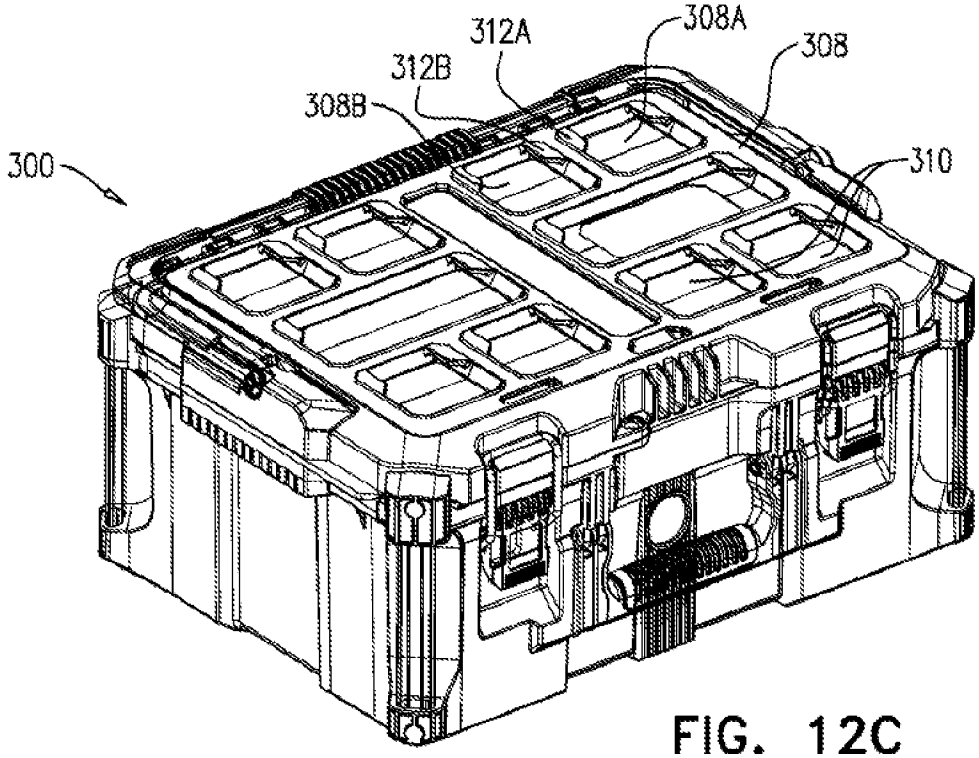
312A
308A
308
312B
308B
300
310

FIG. 12C

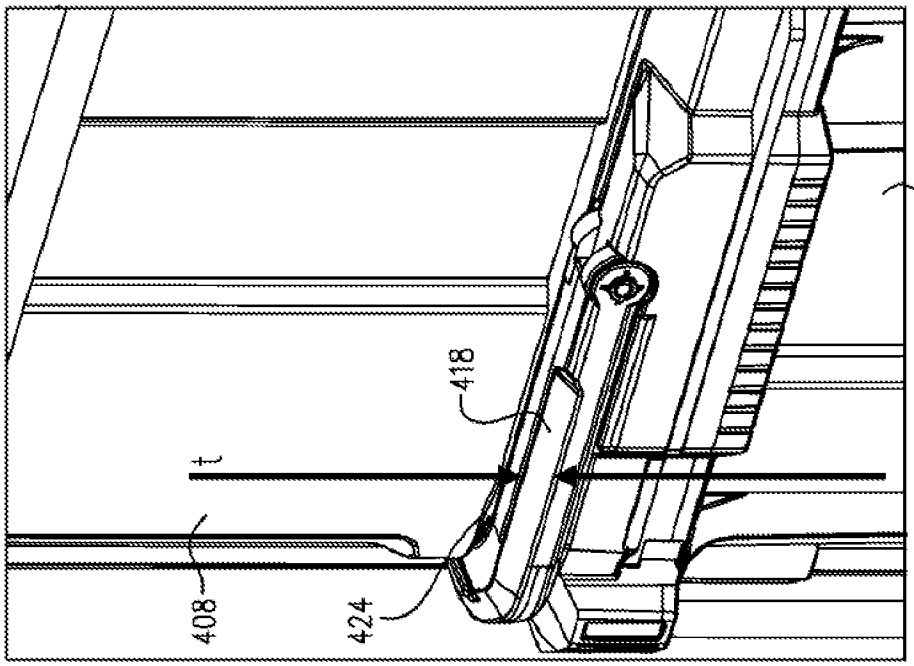

FIG. 13B

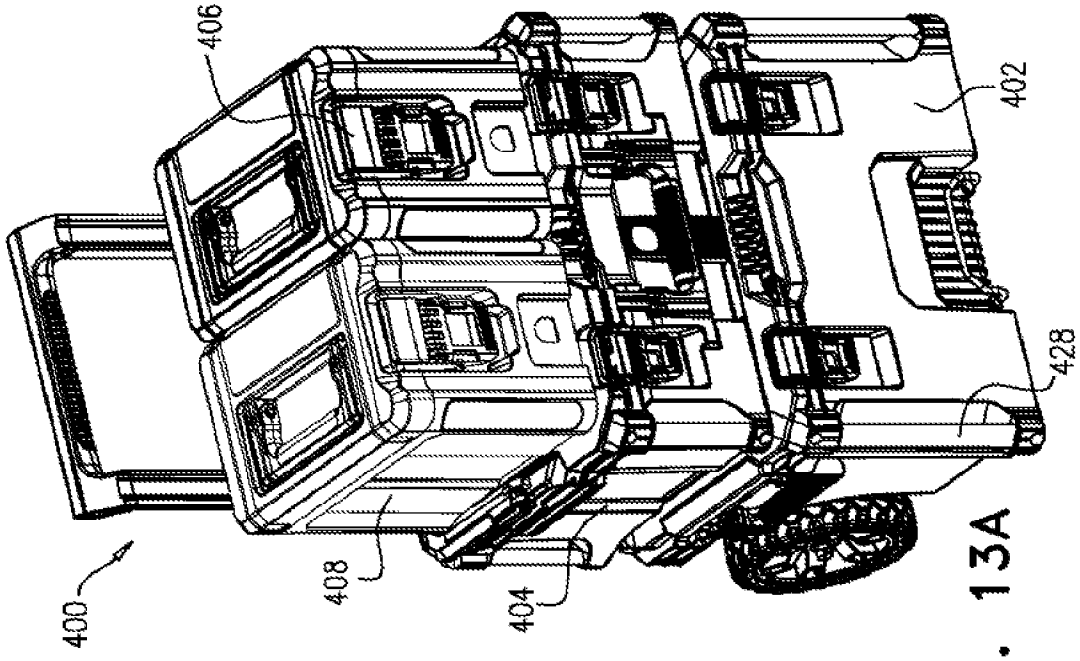

FIG. 13A

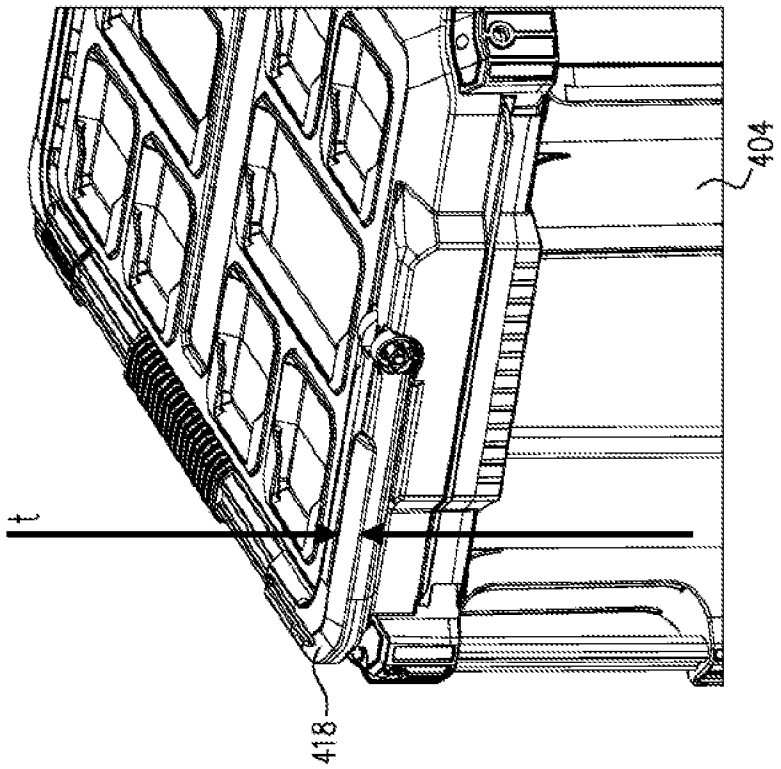

FIG. 13D

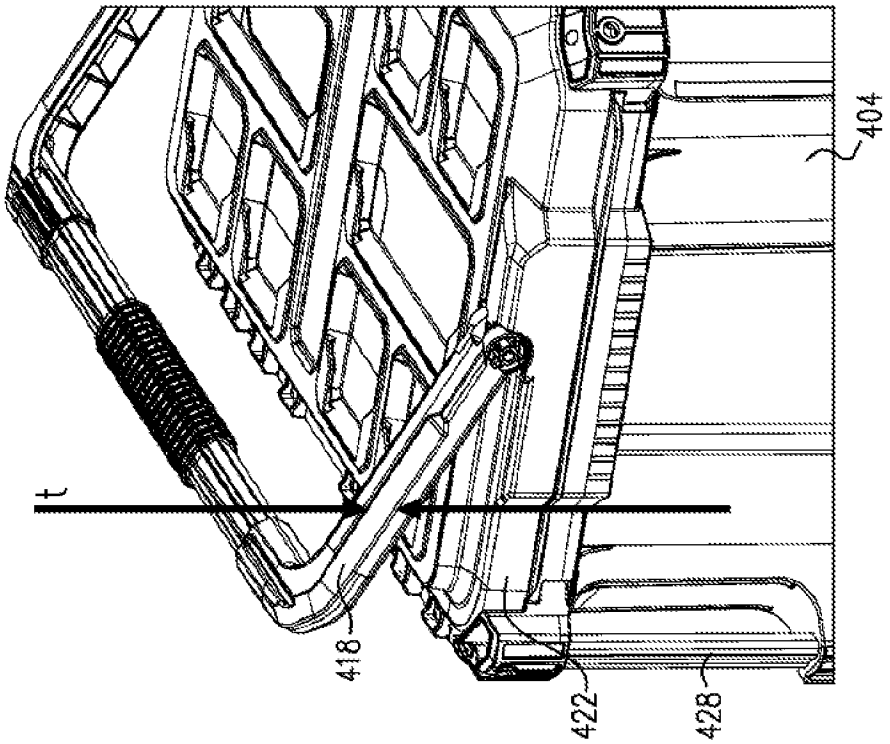

FIG. 13C

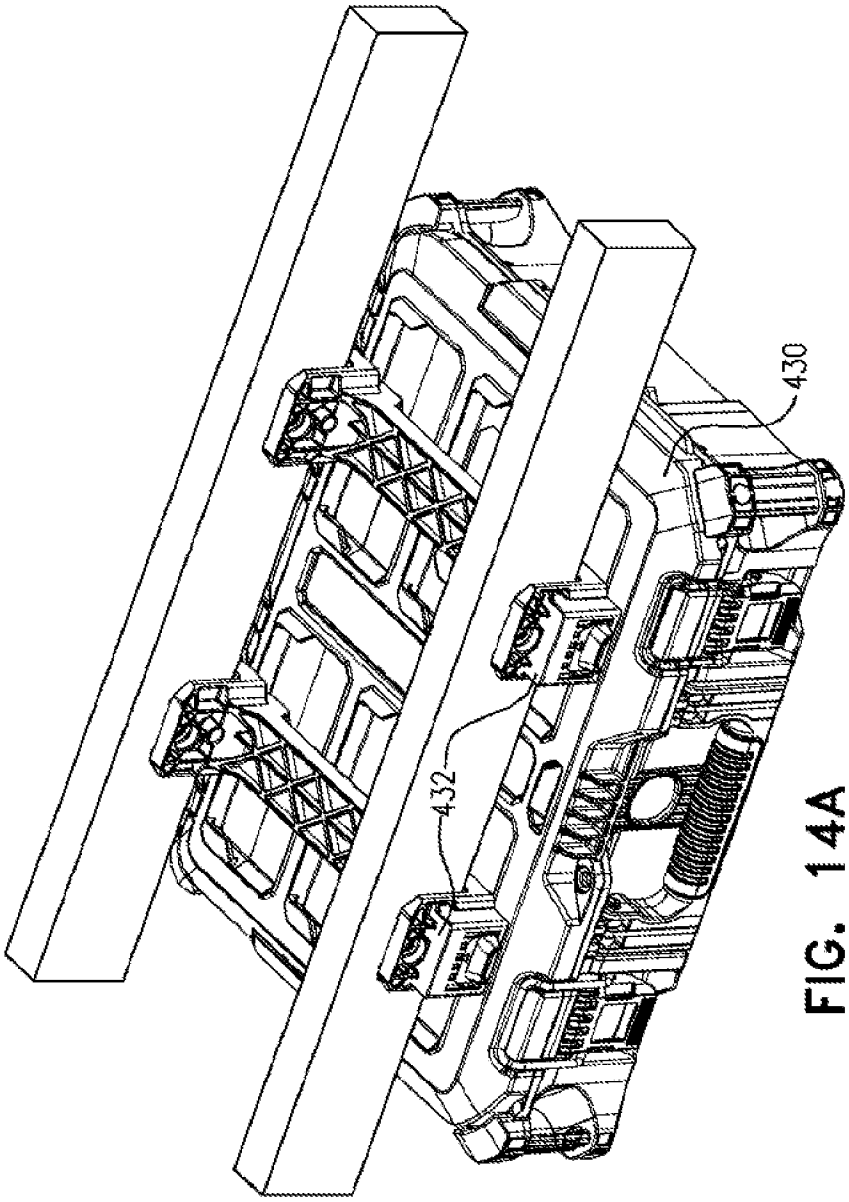

FIG. 14A

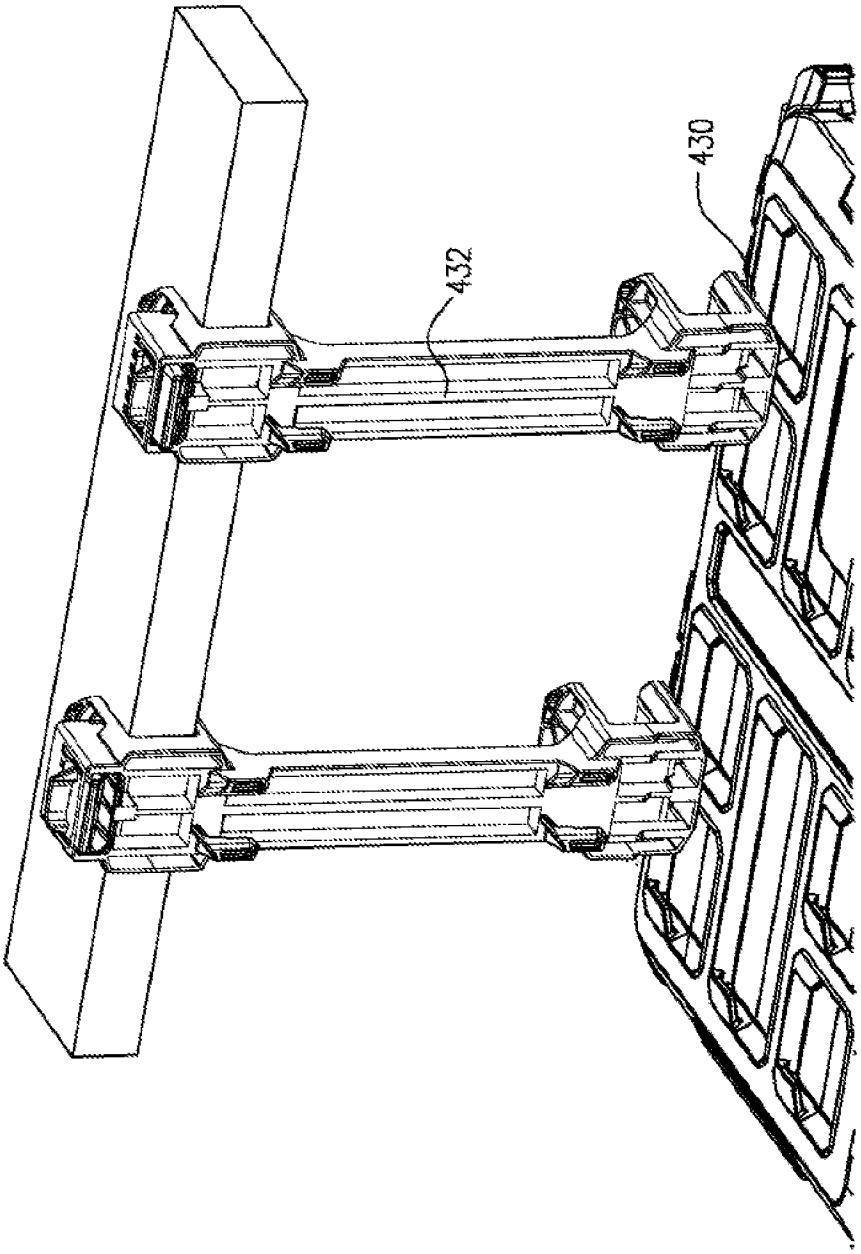

FIG. 14B

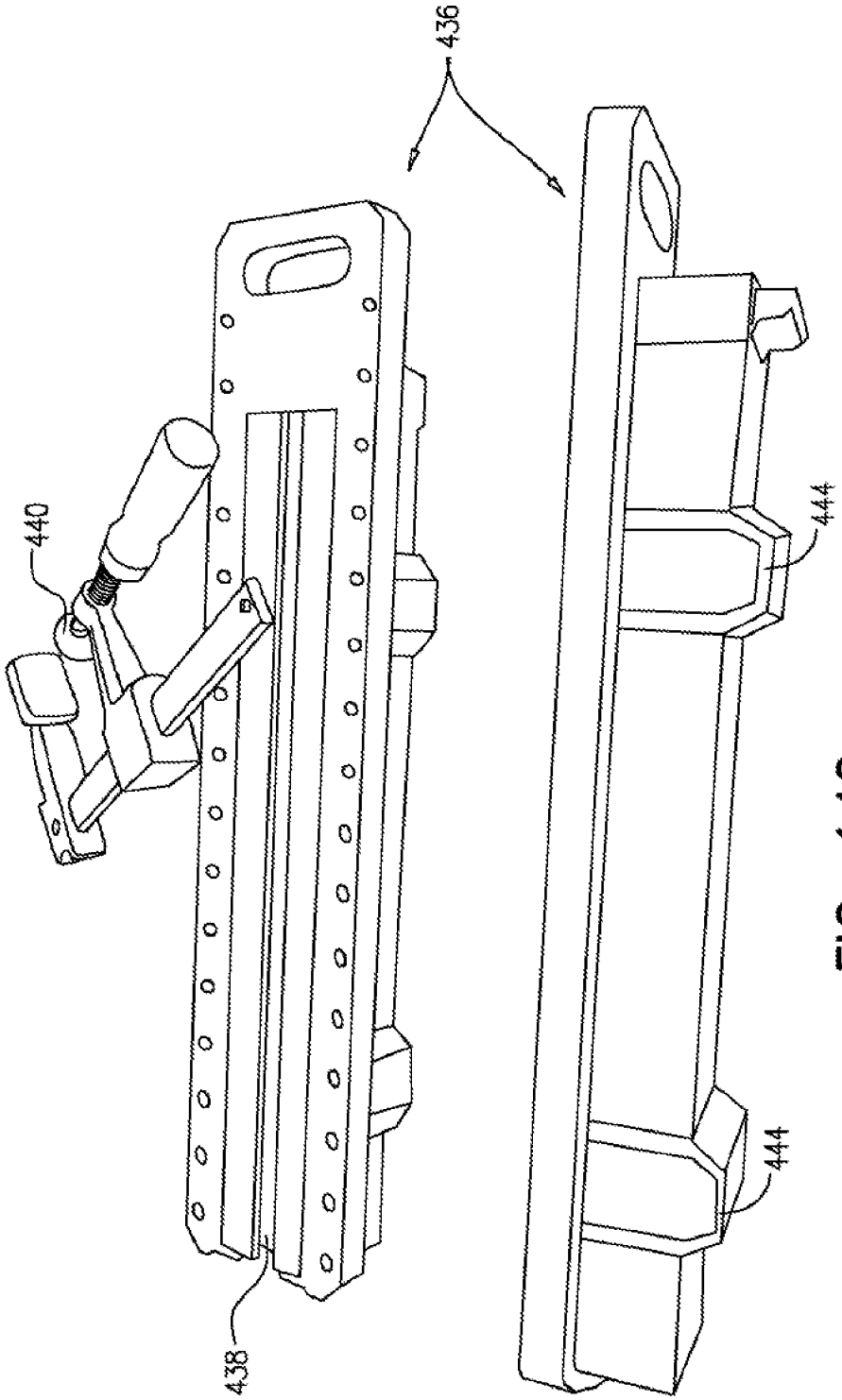

FIG. 14C

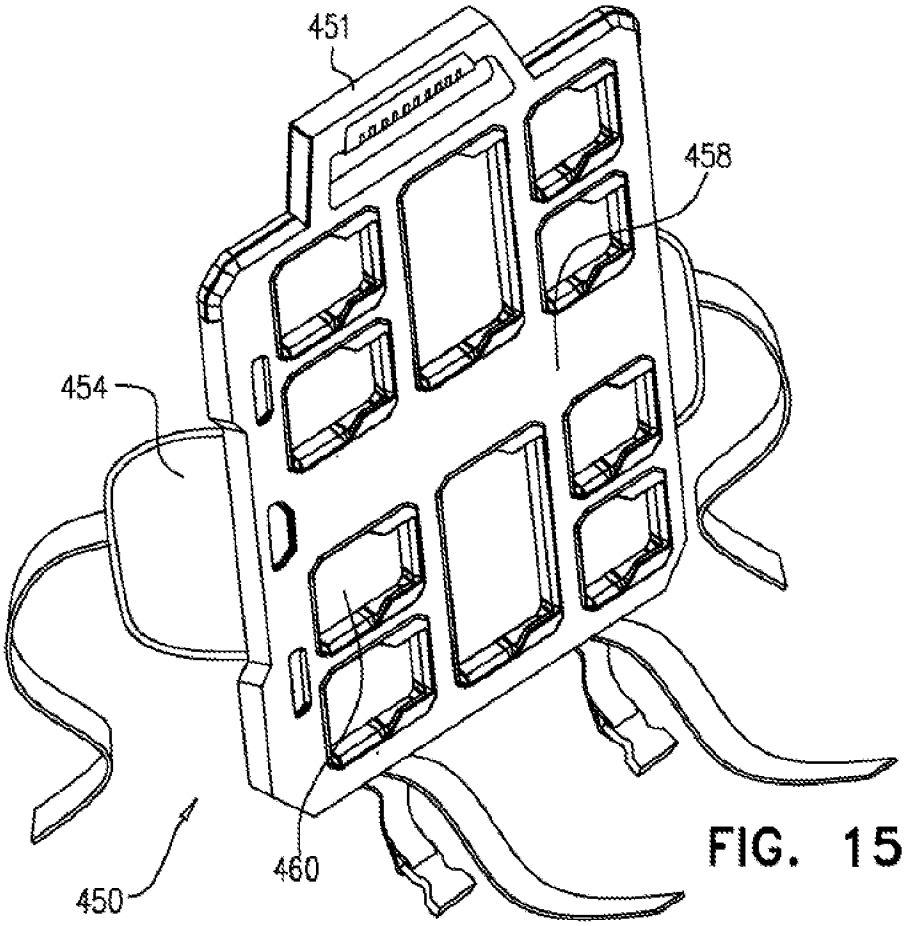

FIG. 15A

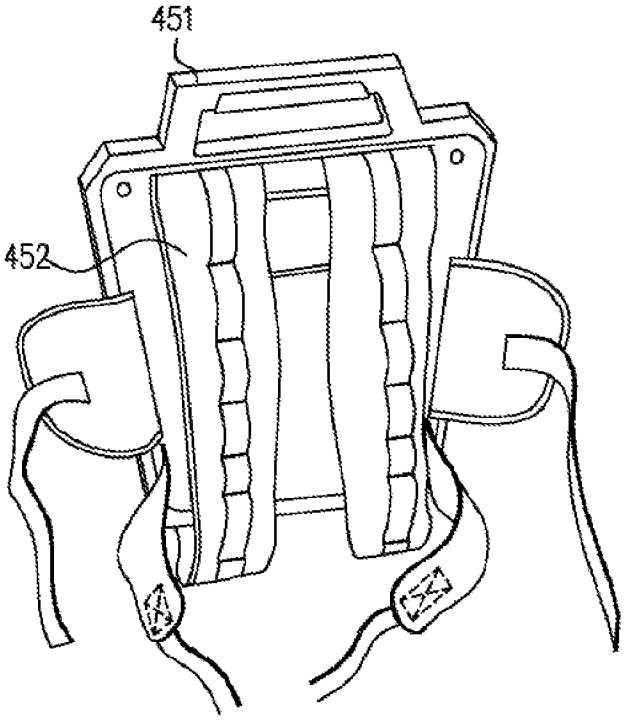

FIG. 15B

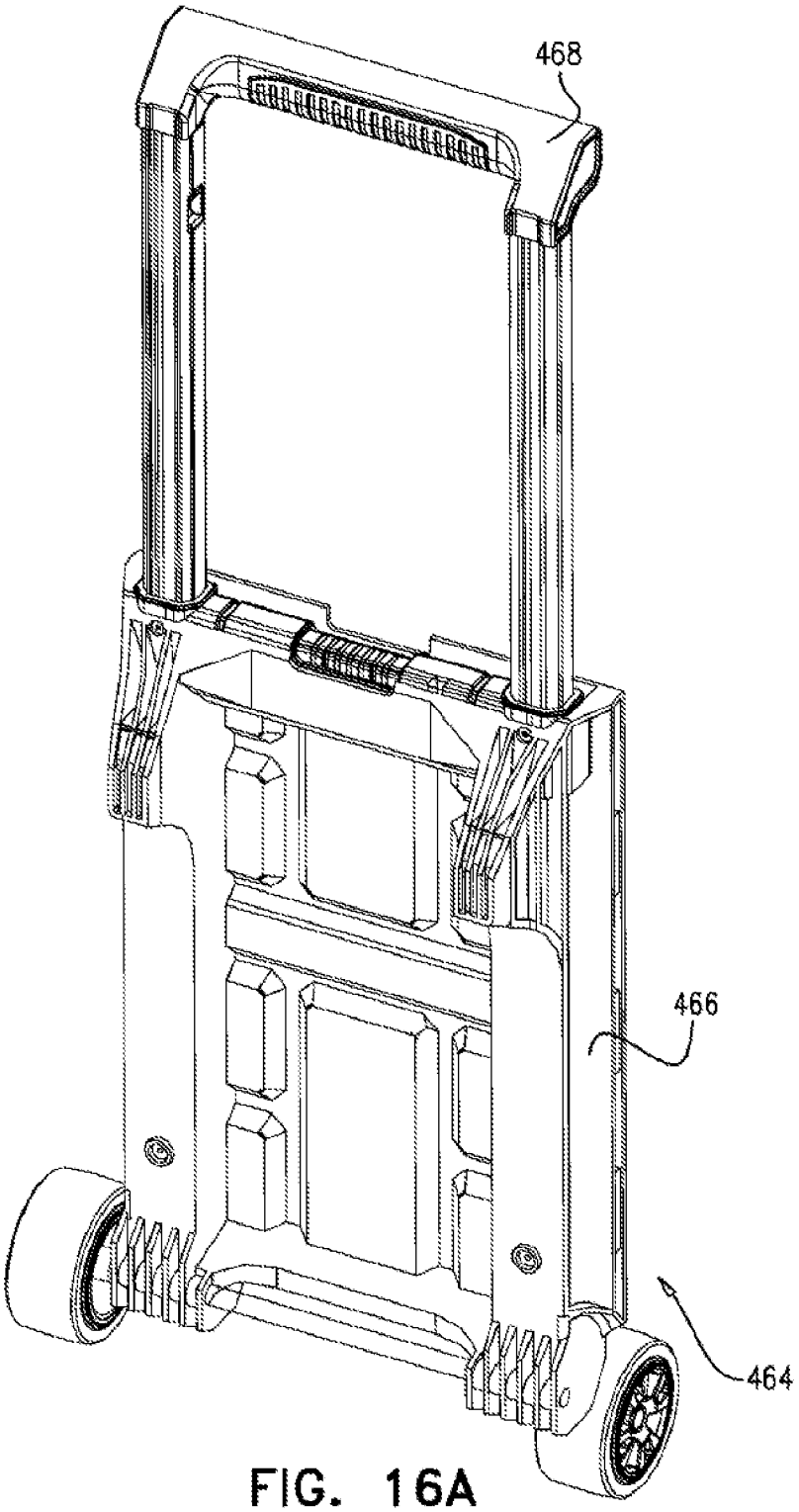

FIG. 16A

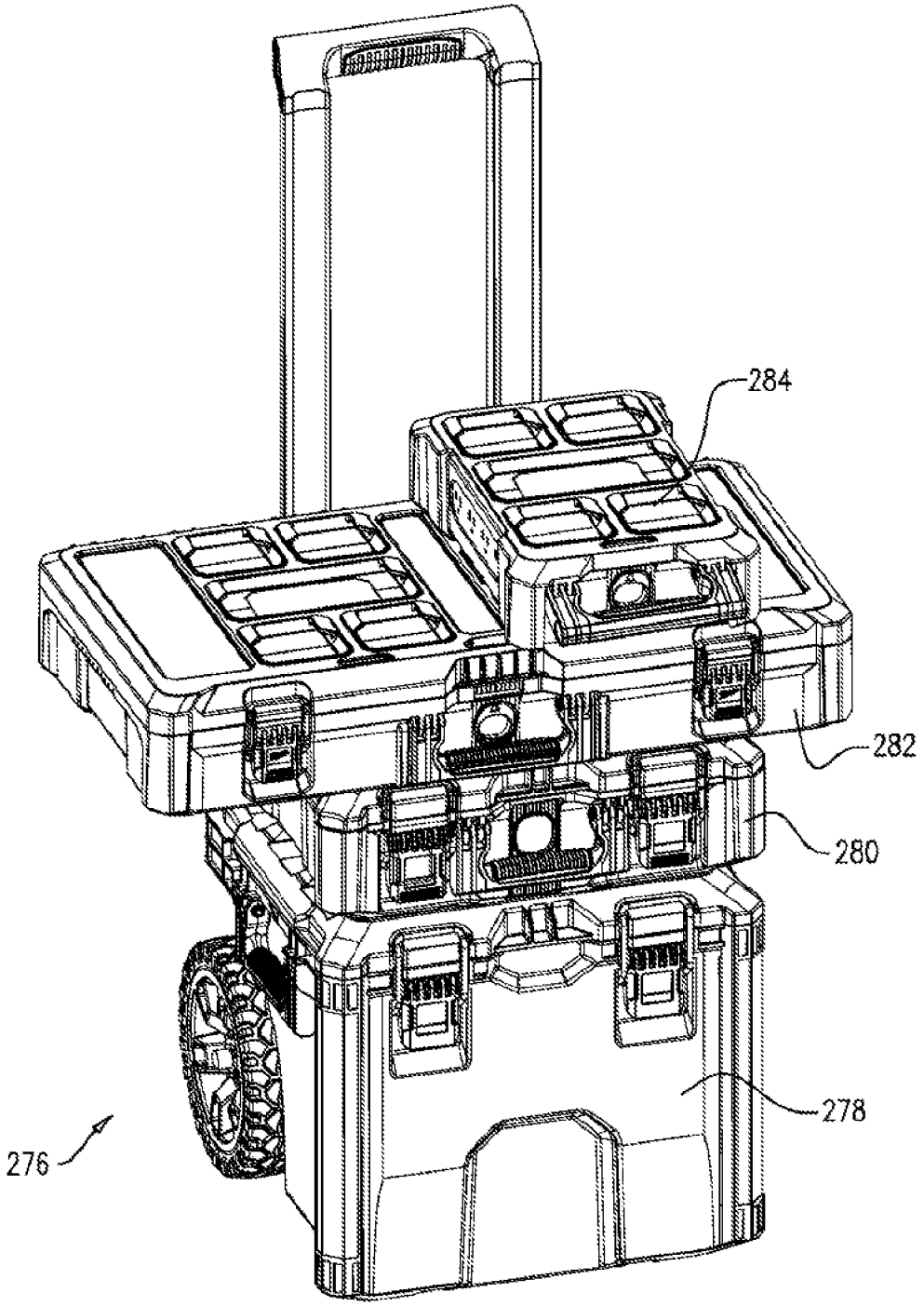

FIG. 16B

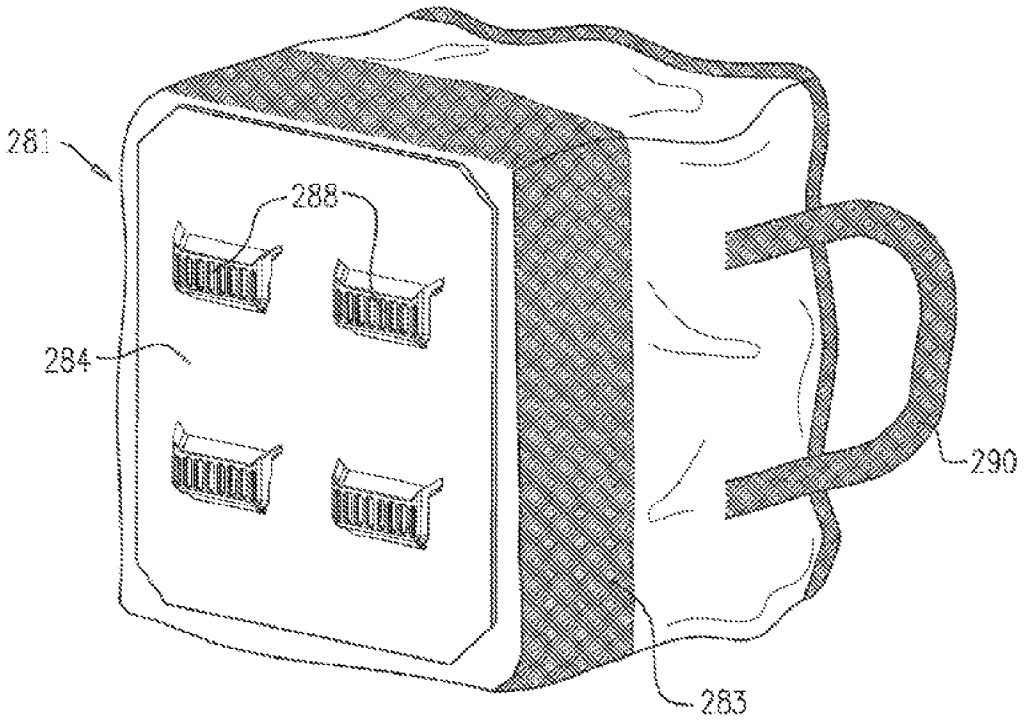

FIG. 17

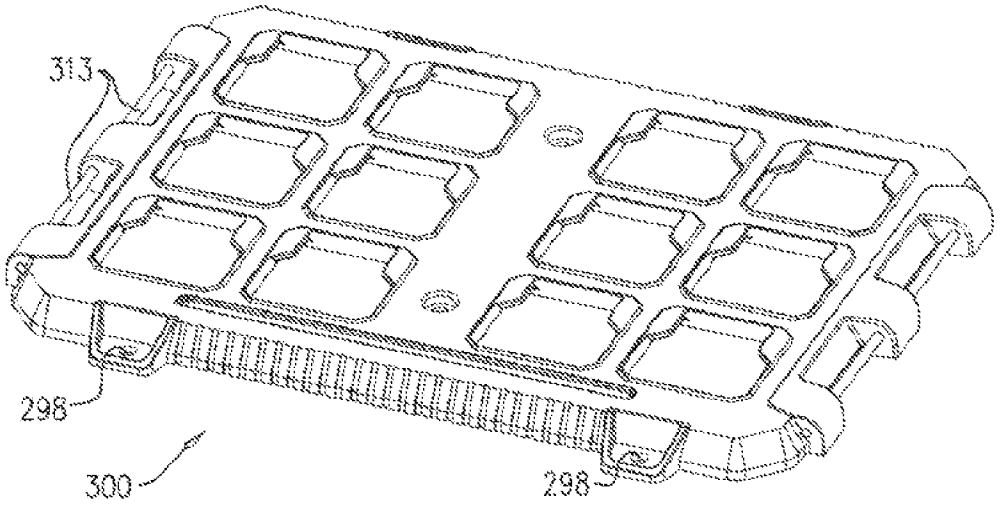

FIG. 18A

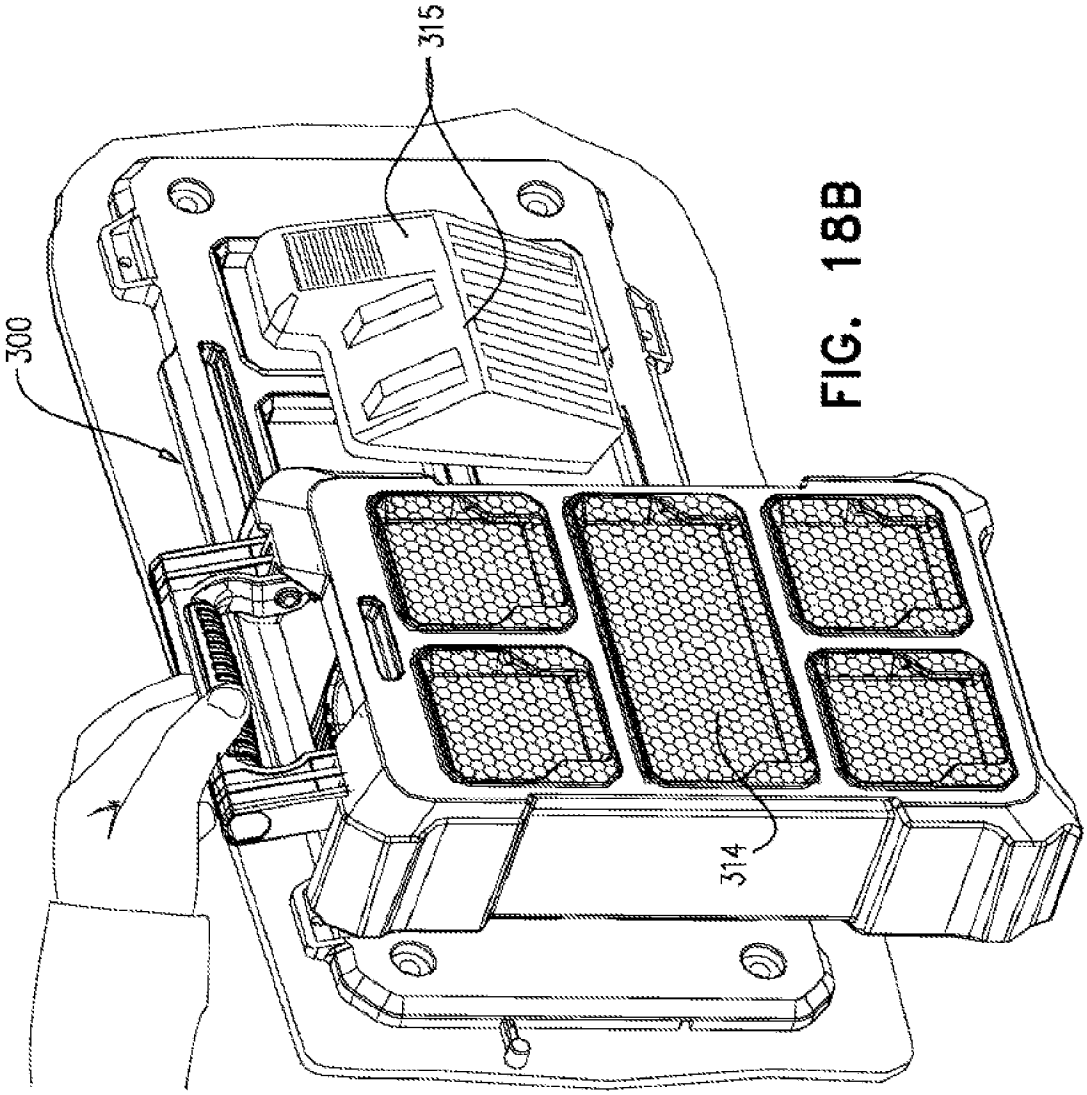

FIG. 18B

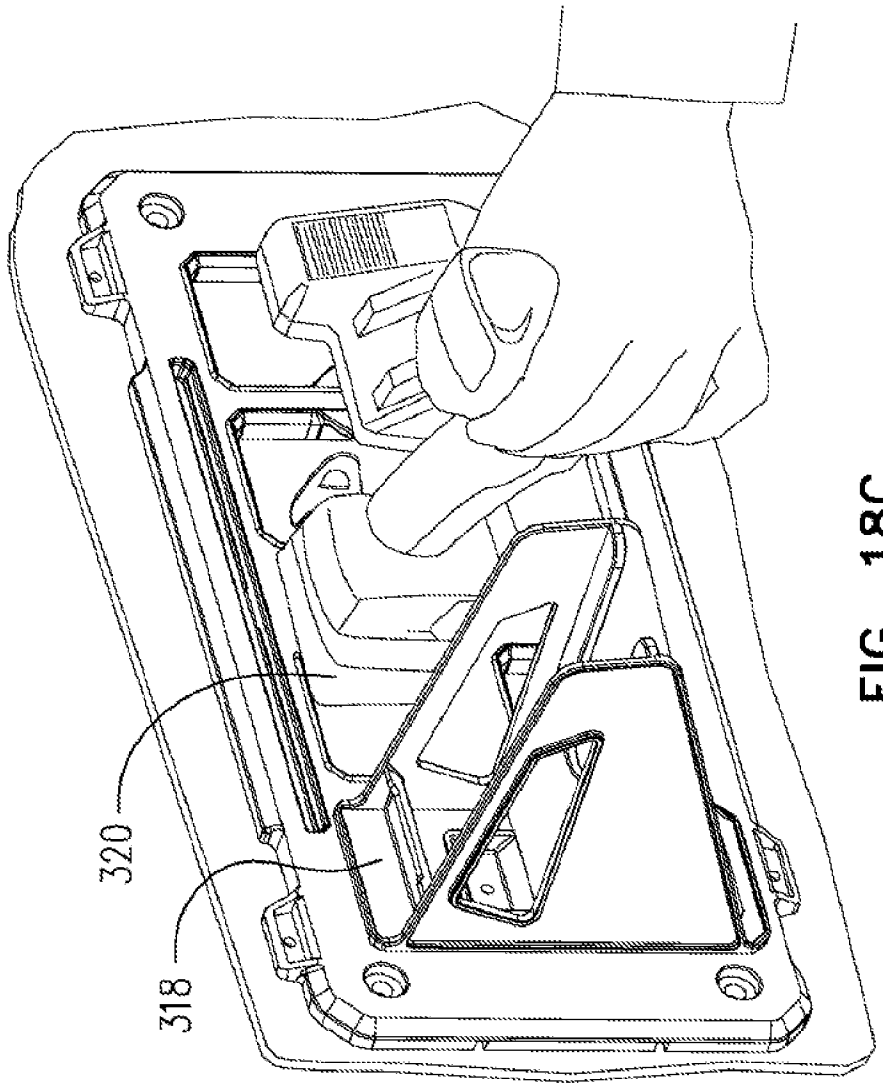

FIG. 18C

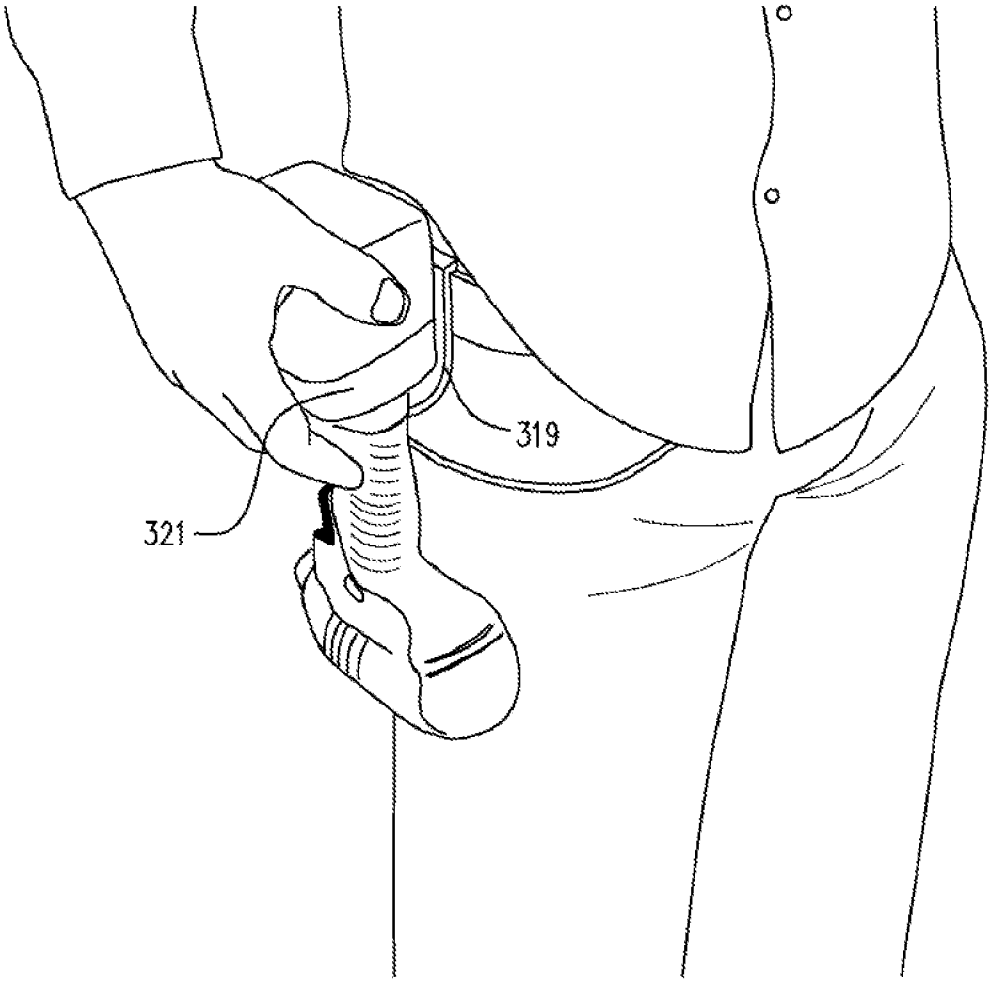

FIG. 19

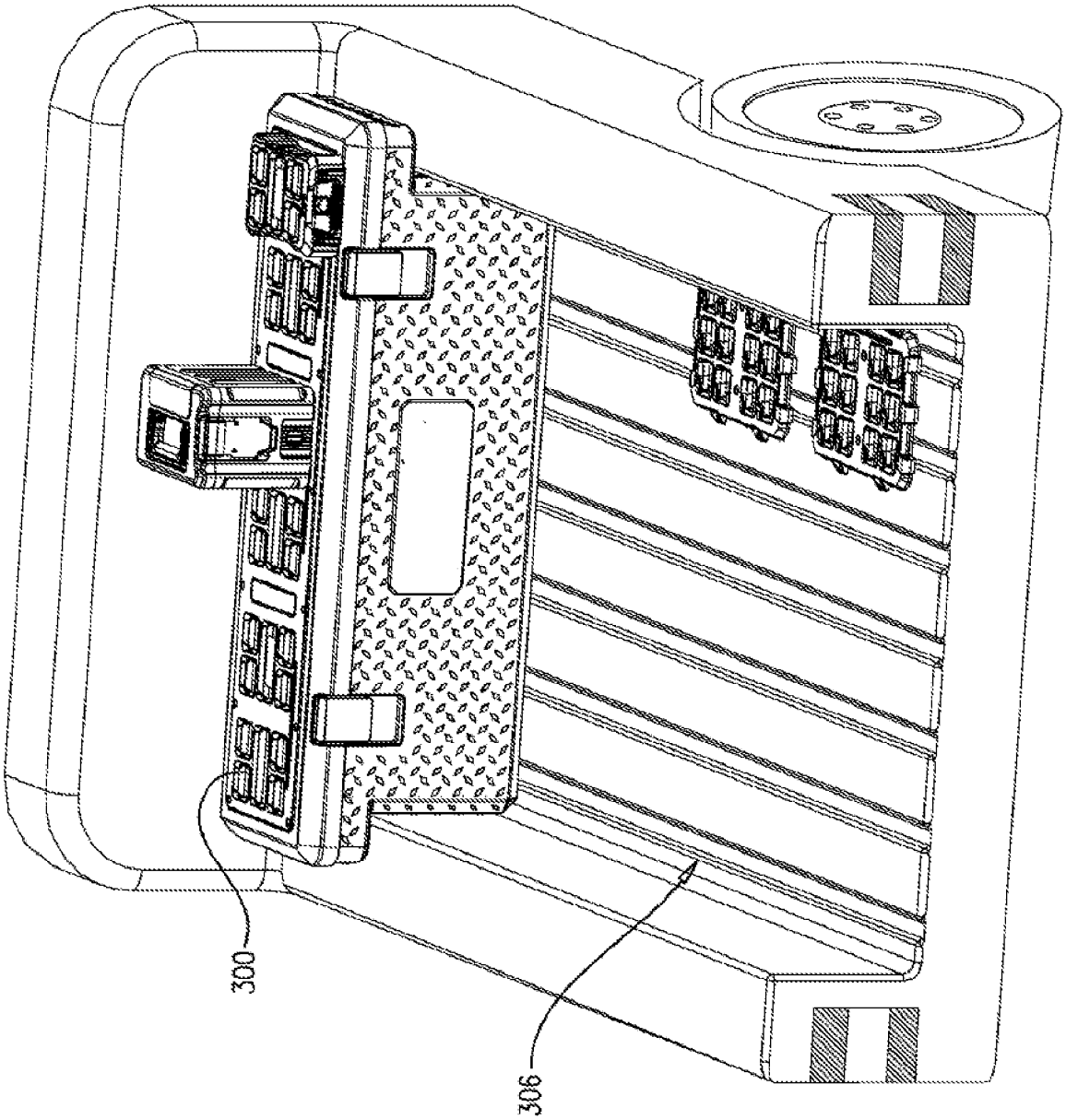

FIG. 20

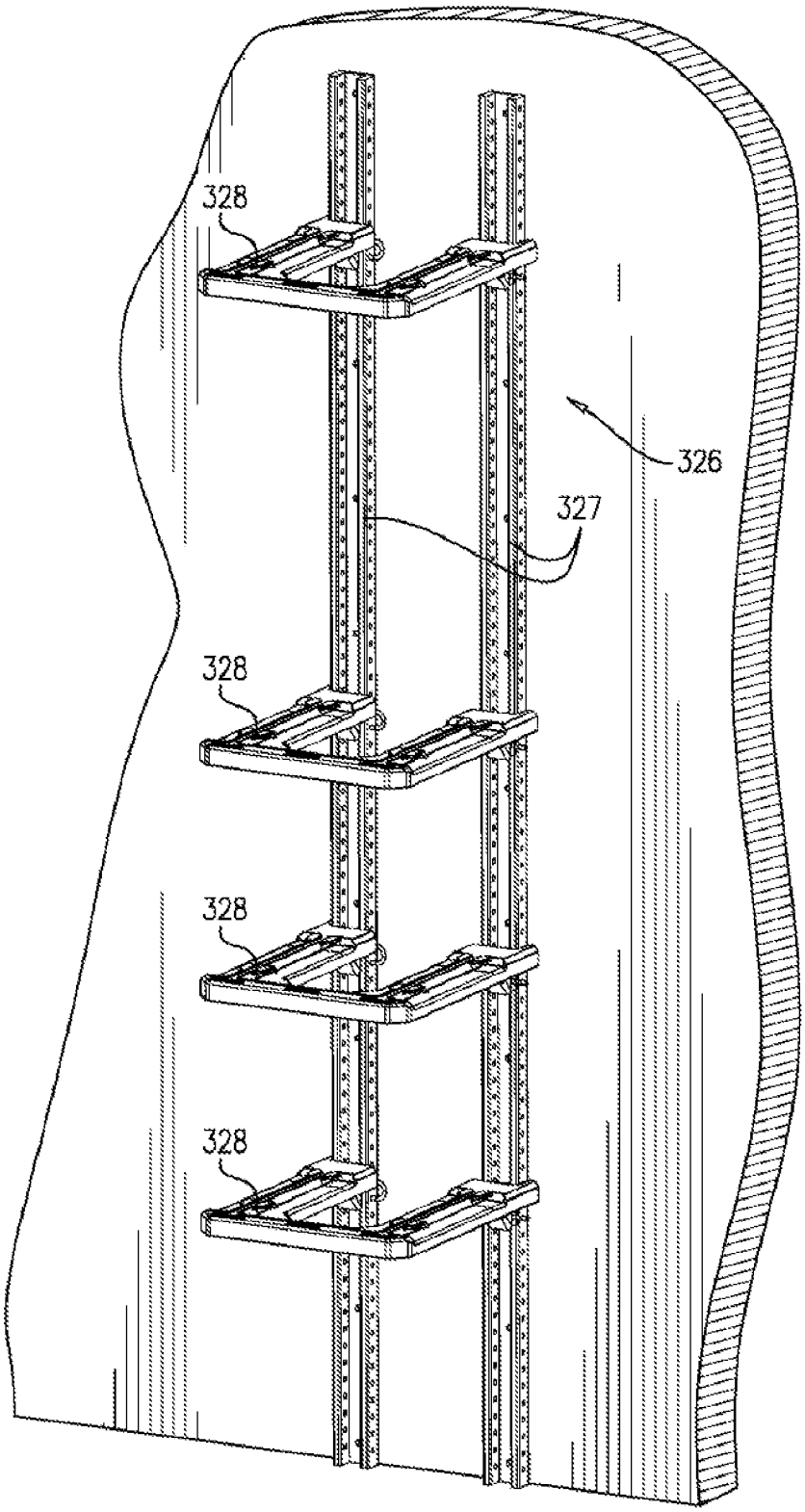

FIG. 21

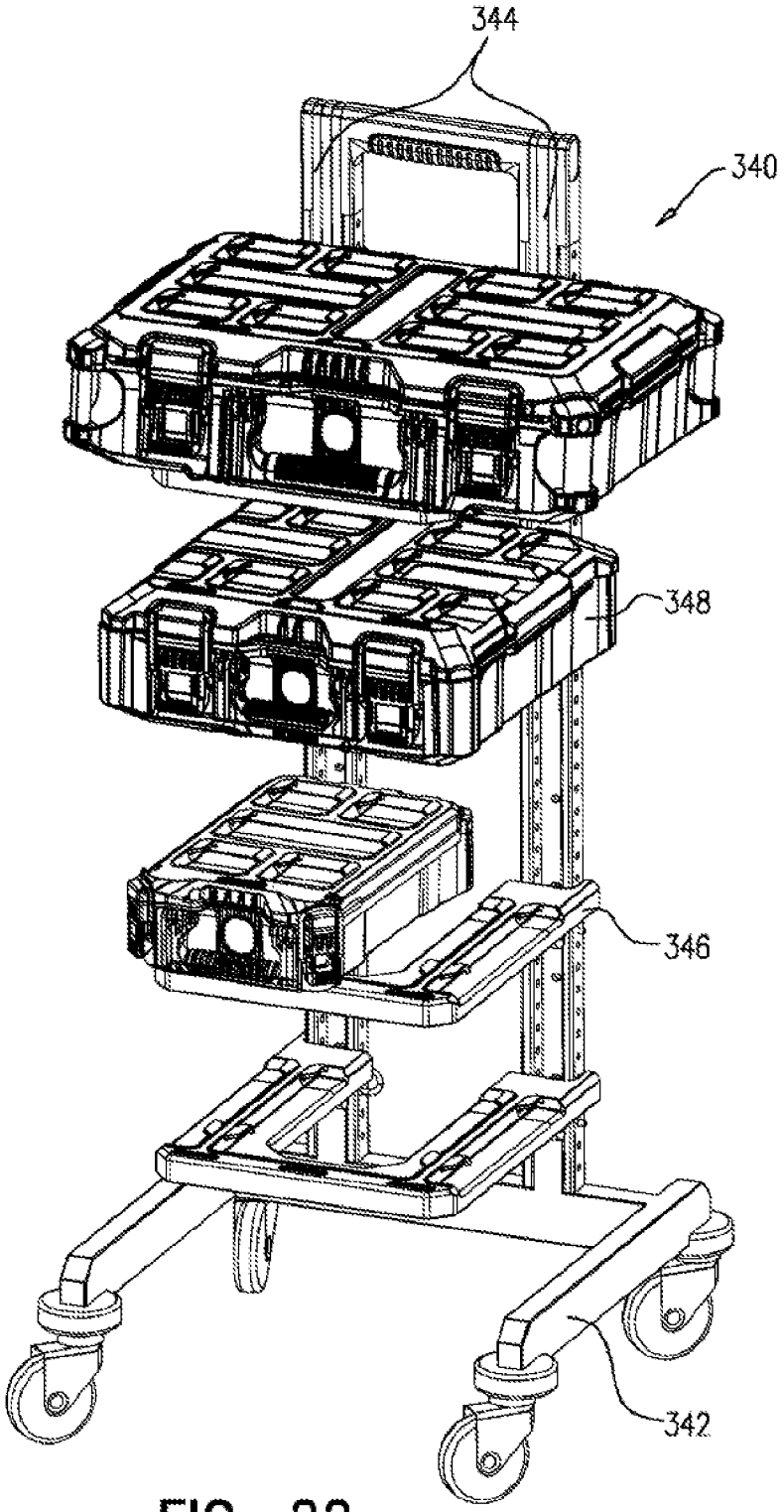

FIG. 22

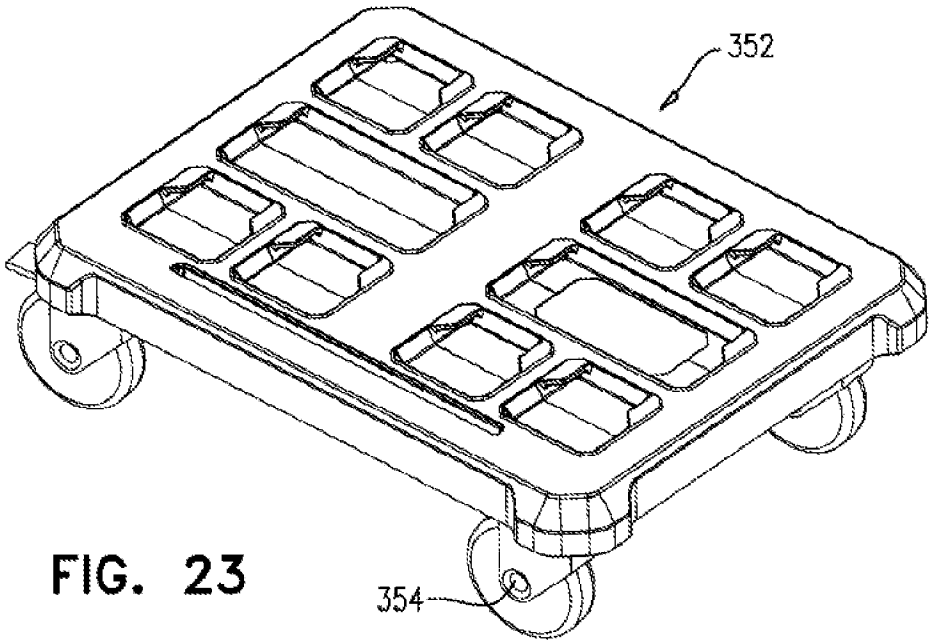

FIG. 23

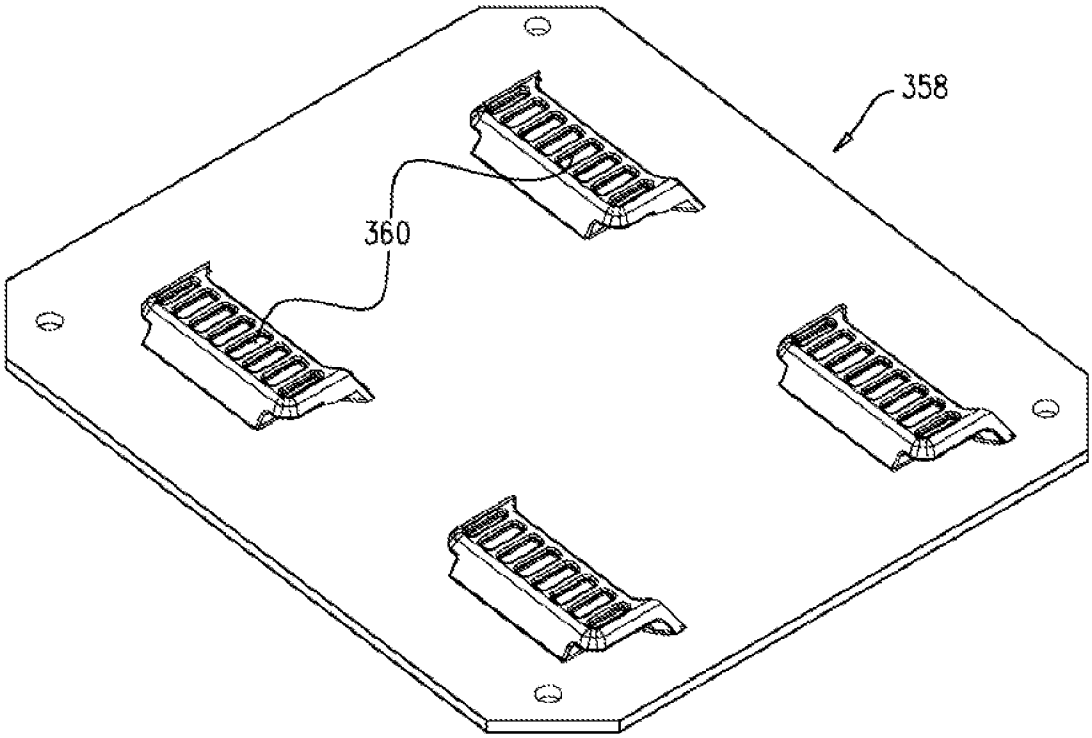

FIG. 24

COMBINED DECLARATION AND ASSIGNMENT

Title of Invention: UTILITY ASSEMBLY AND COUPLING MECHANISM

This declaration and assignment is directed to:

☐ The attached or filed herewith application of (list of named inventors)_____,

or

☒ The United States application or PCT international application Number 15/826,232 filed on November 29, 2017.

Declaration

As the below named inventor, I hereby declare that:

The above-identified application ("Application") was made or authorized by me.

I believe that I am the original inventor or an original inventor of a claimed invention or discovery in the Application.

I have reviewed and understood the contents of the Application, including the claims, and I acknowledge the duty to disclose information which is material to patentability as defined in Title 37, the United States Code of Federal Regulations, §1.56 for filings of this Application in the United States of America.

I hereby acknowledge that any willful false statement made in this declaration is punishable under 18 U.S.C. § 1001 by fine or imprisonment of not more than five (5) years, or both for filings of this Application in the United States of America.

Assignment

MILWAUKEE ELECTRIC TOOL CORPORATION
13135 West Lisbon Road
Brookfield, WI 53005

a Delaware Corporation

(hereinafter designated as the "Assignee"),

☐ I hereby acknowledge that I have assigned the above-identified invention by previous assignment (attached hereto) to Assignee which is hereby conformed for recordation in the US Patent Office and I confirm I have and do assign and transfer:

or

☒ For good and valuable consideration, the sufficiency of which is acknowledged, I hereby assign and transfer and/or have assigned and transferred to Assignee:

my entire right, title, and interest in, to, and under the Application, including all priority rights for other countries arising therefrom and the right to claim priority to the Application, all inventions or discoveries therein disclosed, and any and all Letters Patent of the United States, European Patent Office and of all other countries, which may be granted for such inventions or discoveries, or any of them, all such inventions or discoveries and all rights in such Application including any and all provisionals, substitutions, divisions, and continuations thereof, and to all Letters Patent that may be granted for said inventions and discoveries, and in and to all extensions, supplementary protection certificates, reexaminations, renewals, and reissues thereof, to be held and enjoyed by Assignee for its own use and enjoyment to the full end of the term or terms for which such Letters Patent may be granted, as fully and entirely as the same would

have been held and enjoyed by me had this assignment and sale not been made.

I shall execute all papers necessary in connection with the Application in the United States Patent and Trademark Office, European Patent Office, any other patent offices, and under the Patent Cooperation Treaty, and any continuing, divisional, or reissue applications thereof, any reexamination of any of such applications, and any patent term extensions or supplementary protection certificates of any such applications and also to execute separate assignments in connection with such applications as the Assignee may deem necessary or expedient.

I shall execute all papers necessary in connection with any litigation or any other judicial proceeding in the United States or other country, or any administrative proceeding in the United States Patent and Trademark Office, European Patent Office, any other patent office, or under the Patent Cooperation Treaty concerning the Application(s) or any continuation, divisional, or reissue applications thereof, or any reexamination of any such applications, or any Letters Patent issued therefrom or any patent term extensions or supplementary protection certificates of any such applications and to cooperate with the Assignee in every way possible in obtaining evidence and going forward with such litigation or proceeding.

I shall execute all papers and documents and perform any act which may be necessary in connection with claims or provisions of the International Convention for Protection of Industrial Property or similar agreements.

I shall do all other acts which, in the opinion of Assignee, may be necessary or desirable to secure the grant of Letters Patent to Assignee or its nominees, in the United States, by the European Patent Office and in all other countries where Assignee may desire to have such inventions or discoveries, or any of them, patented, with specifications and claims in such form as shall be approved by Assignee and to vest and confirm in Assignee or its nominees the full and complete legal and equitable title to all such Letters Patent.

I hereby (i) authorize and request the Commissioner of Patents to issue any and all Letters Patent of the United States resulting from the Application or any divisional, continuation, or reissue applications thereof, and any reexamination of any of such applications, to Assignee, and (ii) covenant that I have full right to convey the interest herein assigned, and that I have not executed, and will not execute, any agreement in conflict herewith.

I hereby grant the attorney of record the power to insert on this assignment any further identification which may be necessary or desirable in order to obtain legal recordation of this document.

LEGAL NAME OF INVENTOR

Grant T. Squiers

Signature

9.5.18
Date

COMBINED DECLARATION AND ASSIGNMENT

Title of Invention: UTILITY ASSEMBLY AND COUPLING MECHANISM

This declaration and assignment is directed to:

☐ The attached or filed herewith application of (list of named inventors)_____,

or

☒ The United States application or PCT international application Number 15/826,232 filed on November 29, 2017.

Declaration

As the below named inventor, I hereby declare that:

The above-identified application ("Application") was made or authorized by me.

I believe that I am the original inventor or an original inventor of a claimed invention or discovery in the Application.

I have reviewed and understood the contents of the Application, including the claims, and I acknowledge the duty to disclose information which is material to patentability as defined in Title 37, the United States Code of Federal Regulations, §1.56 for filings of this Application in the United States of America.

I hereby acknowledge that any willful false statement made in this declaration is punishable under 18 U.S.C. § 1001 by fine or imprisonment of not more than five (5) years, or both for filings of this Application in the United States of America.

Assignment

MILWAUKEE ELECTRIC TOOL CORPORATION
13135 West Lisbon Road
Brookfield, WI 53005

a Delaware Corporation

(hereinafter designated as the "Assignee"),

☐ I hereby acknowledge that I have assigned the above-identified invention by previous assignment (attached hereto) to Assignee which is hereby conformed for recordation in the US Patent Office and I confirm I have and do assign and transfer:

or

☒ For good and valuable consideration, the sufficiency of which is acknowledged, I hereby assign and transfer and/or have assigned and transferred to Assignee:

my entire right, title, and interest in, to, and under the Application, including all priority rights for other countries arising therefrom and the right to claim priority to the Application, all inventions or discoveries therein disclosed, and any and all Letters Patent of the United States, European Patent Office and of all other countries, which may be granted for such inventions or discoveries, or any of them, all such inventions or discoveries and all rights in such Application including any and all provisionals, substitutions, divisions, and continuations thereof, and to all Letters Patent that may be granted for said inventions and discoveries, and in and to all extensions, supplementary protection certificates, reexaminations, renewals, and reissues thereof, to be held and enjoyed by Assignee for its own use and enjoyment to the full end of the term or terms for which such Letters Patent may be granted, as fully and entirely as the same would

have been held and enjoyed by me had this assignment and sale not been made.

I shall execute all papers necessary in connection with the Application in the United States Patent and Trademark Office, European Patent Office, any other patent offices, and under the Patent Cooperation Treaty, and any continuing, divisional, or reissue applications thereof, any reexamination of any of such applications, and any patent term extensions or supplementary protection certificates of any such applications and also to execute separate assignments in connection with such applications as the Assignee may deem necessary or expedient.

I shall execute all papers necessary in connection with any litigation or any other judicial proceeding in the United States or other country, or any administrative proceeding in the United States Patent and Trademark Office, European Patent Office, any other patent office, or under the Patent Cooperation Treaty concerning the Application(s) or any continuation, divisional, or reissue applications thereof, or any reexamination of any such applications, or any Letters Patent issued therefrom or any patent term extensions or supplementary protection certificates of any such applications and to cooperate with the Assignee in every way possible in obtaining evidence and going forward with such litigation or proceeding.

I shall execute all papers and documents and perform any act which may be necessary in connection with claims or provisions of the International Convention for Protection of Industrial Property or similar agreements.

I shall do all other acts which, in the opinion of Assignee, may be necessary or desirable to secure the grant of Letters Patent to Assignee or its nominees, in the United States, by the European Patent Office and in all other countries where Assignee may desire to have such inventions or discoveries, or any of them, patented, with specifications and claims in such form as shall be approved by Assignee and to vest and confirm in Assignee or its nominees the full and complete legal and equitable title to all such Letters Patent.

I hereby (i) authorize and request the Commissioner of Patents to issue any and all Letters Patent of the United States resulting from the Application or any divisional, continuation, or reissue applications thereof, and any reexamination of any of such applications, to Assignee, and (ii) covenant that I have full right to convey the interest herein assigned, and that I have not executed, and will not execute, any agreement in conflict herewith.

I hereby grant the attorney of record the power to insert on this assignment any further identification which may be necessary or desirable in order to obtain legal recordation of this document.

LEGAL NAME OF INVENTOR

Christopher S. Hoppe

Signature

Date

COMBINED DECLARATION AND ASSIGNMENT

Title of Invention: UTILITY ASSEMBLY AND COUPLING MECHANISM

This declaration and assignment is directed to:

☐ The attached or filed herewith application of (list of named inventors)_____,

or

☒ The United States application or PCT international application Number 15/826,232 filed on November 29, 2017.

Declaration

As the below named inventor, I hereby declare that:

The above-identified application ("Application") was made or authorized by me.

I believe that I am the original inventor or an original inventor of a claimed invention or discovery in the Application.

I have reviewed and understood the contents of the Application, including the claims, and I acknowledge the duty to disclose information which is material to patentability as defined in Title 37, the United States Code of Federal Regulations, §1.56 for filings of this Application in the United States of America.

I hereby acknowledge that any willful false statement made in this declaration is punishable under 18 U.S.C. § 1001 by fine or imprisonment of not more than five (5) years, or both for filings of this Application in the United States of America.

Assignment

MILWAUKEE ELECTRIC TOOL CORPORATION
13135 West Lisbon Road
Brookfield, WI 53005

a Delaware Corporation

(hereinafter designated as the "Assignee"),

☐ I hereby acknowledge that I have assigned the above-identified invention by previous assignment (attached hereto) to Assignee which is hereby conformed for recordation in the US Patent Office and I confirm I have and do assign and transfer:

or

☒ For good and valuable consideration, the sufficiency of which is acknowledged, I hereby assign and transfer and/or have assigned and transferred to Assignee:

my entire right, title, and interest in, to, and under the Application, including all priority rights for other countries arising therefrom and the right to claim priority to the Application, all inventions or discoveries therein disclosed, and any and all Letters Patent of the United States, European Patent Office and of all other countries, which may be granted for such inventions or discoveries, or any of them, all such inventions or discoveries and all rights in such Application including any and all provisionals, substitutions, divisions, and continuations thereof, and to all Letters Patent that may be granted for said inventions and discoveries, and in and to all extensions, supplementary protection certificates, reexaminations, renewals, and reissues thereof, to be held and enjoyed by Assignee for its own use and enjoyment to the full end of the term or terms for which such Letters Patent may be granted, as fully and entirely as the same would

have been held and enjoyed by me had this assignment and sale not been made.

I shall execute all papers necessary in connection with the Application in the United States Patent and Trademark Office, European Patent Office, any other patent offices, and under the Patent Cooperation Treaty, and any continuing, divisional, or reissue applications thereof, any reexamination of any of such applications, and any patent term extensions or supplementary protection certificates of any such applications and also to execute separate assignments in connection with such applications as the Assignee may deem necessary or expedient.

I shall execute all papers necessary in connection with any litigation or any other judicial proceeding in the United States or other country, or any administrative proceeding in the United States Patent and Trademark Office, European Patent Office, any other patent office, or under the Patent Cooperation Treaty concerning the Application(s) or any continuation, divisional, or reissue applications thereof, or any reexamination of any such applications, or any Letters Patent issued therefrom or any patent term extensions or supplementary protection certificates of any such applications and to cooperate with the Assignee in every way possible in obtaining evidence and going forward with such litigation or proceeding.

I shall execute all papers and documents and perform any act which may be necessary in connection with claims or provisions of the International Convention for Protection of Industrial Property or similar agreements.

I shall do all other acts which, in the opinion of Assignee, may be necessary or desirable to secure the grant of Letters Patent to Assignee or its nominees, in the United States, by the European Patent Office and in all other countries where Assignee may desire to have such inventions or discoveries, or any of them, patented, with specifications and claims in such form as shall be approved by Assignee and to vest and confirm in Assignee or its nominees the full and complete legal and equitable title to all such Letters Patent.

I hereby (i) authorize and request the Commissioner of Patents to issue any and all Letters Patent of the United States resulting from the Application or any divisional, continuation, or reissue applications thereof, and any reexamination of any of such applications, to Assignee, and (ii) covenant that I have full right to convey the interest herein assigned, and that I have not executed, and will not execute, any agreement in conflict herewith.

I hereby grant the attorney of record the power to insert on this assignment any further identification which may be necessary or desirable in order to obtain legal recordation of this document.

LEGAL NAME OF INVENTOR

Steven W. Hyma

Signature

9/5/18

Date

DECLARATION (37 CFR 1.63) FOR UTILITY OR DESIGN APPLICATION USING AN APPLICATION DATA SHEET (37 CFR 1.76)

Title of Invention: UTILITY ASSEMBLY AND COUPLING MECHANISM

As a below named inventor, I hereby declare that:

This declaration is directed to the application

☐ attached hereto, or

☒ United States application or PCT International Application No. 15/826,232 filed on November 29, 2017

The above-identified application was made by me or authorized to be made by me.

I believe that I am the original inventor or an original joint inventor of a claimed invention in the application.

I have reviewed and understand the contents of the above-identified application, including the claims.

I acknowledge the duty to disclose information which is material to the patentability of this application as defined in 37 CFR § 1.56.

I hereby acknowledge that any willful false statement made in this declaration is punishable under 18 U.S.C. 1001 by fine or imprisonment of not more than five (5) years, or both.

Legal Name of Inventor

Inventor: **Yaron BRUNNER** Date: 4/01/18

Signature: _____