Jan. 28, 1969 J. GOLTZ 3,424,334

STACKING BOX CONSTRUCTION WITH INTERLOCK

Filed Oct. 9, 1964

Fig. 1

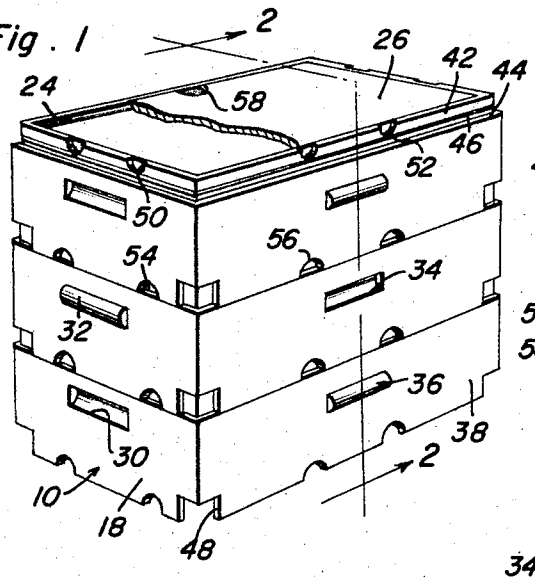

Fig. 2

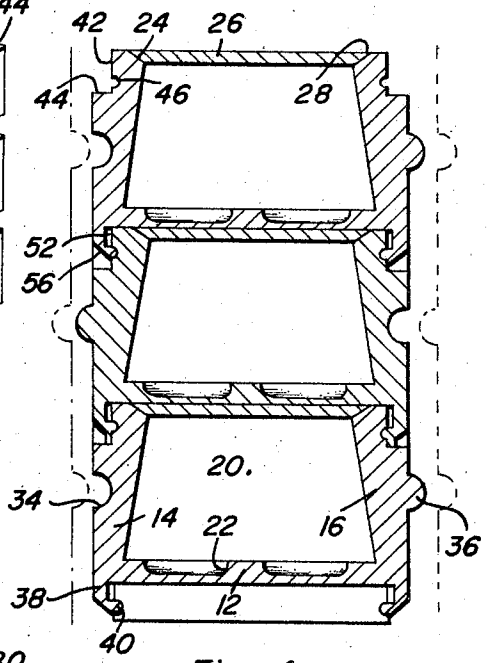

Fig. 3

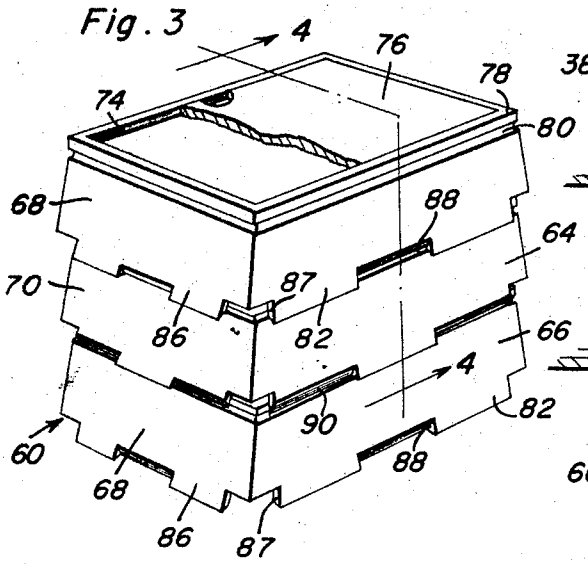

Fig. 4

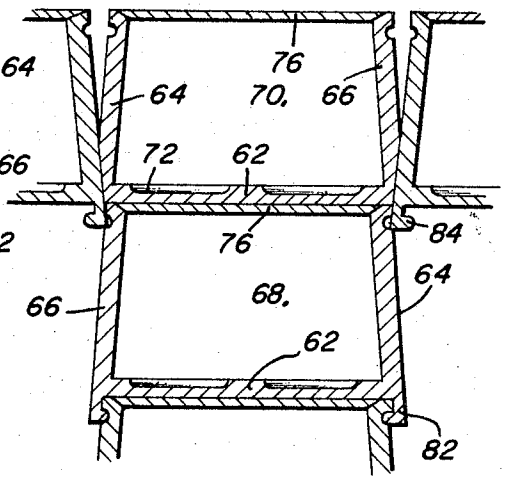

Fig. 5

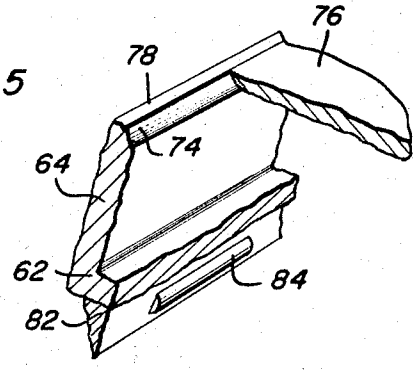

Joseph Goltz

INVENTOR.

BY Clarence A. O'Brien and Harvey B. Jacobson

Attorneys

United States Patent Office

3,424,334

Patented Jan. 28, 1969

1

3,424,334
STACKING BOX CONSTRUCTION WITH INTERLOCK

Joseph Goltz, Pittsburgh, Pa., assignor of twenty-five percent to I. C. Bloom and George I. Bloom, both of Washington, Pa., jointly

Filed Oct. 9, 1964, Ser. No. 402,888
U.S. Cl. 220—23.6 10 Claims
Int. Cl. B65d *21/02, 11/10*

ABSTRACT OF THE DISCLOSURE

A stacking box having a structure enabling interlocking engagement between vertically stacked boxes combined with interengaging means on the walls thereof for engaging similar boxes disposed in side-by-side relation thereby preventing relative vertical movement between adjacent boxes and also preventing relative translatory movement. Each box is also provided with a closure lid which does not interfere with the stacking interlocking connection between stacked boxes. The vertical interlocking engagement includes a depending flexible edge at the bottom of a box for outward flexing and interlocking engagement with an underlying box. The interengaging means on the side walls thereof includes interengaging projections and recesses for retaining the boxes in predetermined relationship to each other when disposed alongside of each other.

The present invention generally relates to a stacking box incorporating means thereon whereby a plurality of similar boxes may be disposed in stacked relationship to each other together with means provided thereon for interlocking boxes disposed alongside of each other to prevent relative shifting of the boxes in both a horizontal plane and vertical plane. The structure disclosed in the present application represents improvements in the structure disclosed in copending application Ser. No. 238,892, filed Nov. 20, 1962, for Stacking Box Construction, now Patent No. 3,182,856.

One of the problems facing manufacturers and the like is the packaging of various manufactured articles or the like especially when relatively large numbers of boxes or containers are used during shipment, storage or display. Such boxes are usually stacked within certain limits and it is an object of the present invention to provide a novel stacking box which will interlock with like boxes above and below the same, to either side of the same and to either end of the same thereby enabling the boxes to be orientated in such a manner that the interlocked stacks of the individual interlocked boxes will not move relative to each other in either a vertical plane or in a horizontal plane.

Another object of the present invention is to provide a stacking box construction in which each box has a removable lid thereon together with means within the box forming locating devices for articles therein.

Yet another object of the present invention is to provide a stacking box construction in which the exterior side walls thereof are orientated in a vertical plane.

A further object of the present invention is to provide a packing box construction in which the side walls thereof converge upwardly.

Another important object of the present invention is to provide a stacking box construction having various modifications which are simple in construction, easy to use, economically feasible, durable and long lasting and relatively inexpensive to manufacture.

These together with other objects and advantages which will become subsequently apparent reside in the details of

2

construction and operation as more fully hereinafter described and claimed, reference being had to the accompanying drawings forming a part hereof, wherein like numerals refer to like parts throughout, and in which:

FIGURE 1 is a perspective view of a stack of boxes incorporating the present invention therein with a portion of the top of one of the boxes broken away;

FIGURE 2 is a transverse, sectional view taken substantially upon a plane passing along section line **2—2** of FIGURE 1 illustrating further structural details of the box construction;

FIGURE 3 is a perspective view similar to FIGURE 1 but illustrating a box construction in which the side walls thereof converge upwardly;

FIGURE 4 is a transverse, sectional view taken substantially upon a plane passing along section line **4—4** of FIGURE 3 with adjacent boxes being illustrated also in section for illustrating the relationship thereof; and

FIGURE 5 is a fragmental perspective view of a portion of one of the boxes illustrated in FIGURE 3.

Referring now more specifically to the drawings and in particular FIGURES 1 and 2, the numeral **10** generally designates the stacking box construction illustrated therein. As illustrated in the drawings, a plurality of the stacking boxes **10** are arranged in a stack with the stacks illustrated in dotted lines in FIGURE 2 illustrating the manner in which the side-by-side stacks are interconnected.

Each of the boxes **10** includes a bottom wall **12**, a pair of parallel upstanding side walls **14** and **16** and a pair of upstanding end walls **18** and **20**. All of the walls are arranged in perpendicular relation to the adjacent walls and in perpendicular orientation to the bottom **12**. For purposes of definition, the side walls **14** and **16** are longer than the end walls **18** and **20** but it is pointed out that the particular shape and dimensional characteristics of the boxes may be varied depending upon the material or articles placed therein.

The upper surface of the bottom wall **12** is provided with a plurality of upwardly opening recesses **22** which are in the form of depressions to accommodate the article or product being shipped therein. The inner surface of the walls are inclined inwardly at any suitable angle in order to provide thickness to the walls from the bottom to the top but the walls or at least the interior surface thereof may be substantially vertical as is the external surface. The upper inner edge of each side wall **14** and **16** and each end wall **18** and **20** is provided with an inclined inner edge portion **24** to receive a top or closure **26** in the form of a plate having a correspondingly beveled or inclined peripheral edge for matching engagement with the inclind edge **24** at the upper edge of the box. This allows the cover **26** to have the upper surface thereof substantially with the upper edge or surface **28** of the peripheral wall of the box as illustrated in FIGURE 2 so that as a plurality of boxes are stacked one on top of another, the surfaces **28** of the walls will engage the bottom surface of the bottom **12** of an overlying box with the stacked boxes also serving to retain the closure **26** in place insofar as the underlying boxes are concerned.

One end wall such as the end wall **18** of each box is provided with a semicylindrical recess **30** forming a handhold and the other end wall of the container or box is provided with a semicylindrical projection **32** with the projections and recesses being aligned and interengaged when boxes are disposed in end-to-end adjacent relation. The recesses and projections **30** and **32** form a handgrip as well as forming a joining mechanism for the ends of abutting boxes.

One side wall such as the side wall **14** of each box is provided with a longitudinally extending semicylindrical recess **34** and the other side wall such as the side wall **16**

is provided with a semicylindrical projection **36** which serves as handgrips for the boxes and also serve to interlock the side walls of adjacent boxes disposed in abutting side-by-side relation for retaining the position of such boxes insofar as relative vertical movement is concerned. As will be apparent, the structure of the boxes is symmetrical and it is only necessary to orientate the boxes so that alternating recesses and projections are orientated at the ends of the stack of boxes as well as at the side thereof.

As illustrated in FIGURE 2, each side wall **14** and **16** has a downwardly extending portion or extension **38** terminating in an inturned lip or nipple **40** at the bottom edge thereof. The upper peripheral edge of each box includes a recess or cut-away portion **42** having the lower extremity thereof defined by a shoulder **44** which is generally horizontally disposed for abuttingly engaging the bottom end of the extension **38**. Also, slightly above the shoulder **44** corresponding to the distance of the projecting lip or nipple **40** above the bottom edge of the extension **38** there is provided on the vertical surface of the recess **42** a slot or groove **46** for receiving the lip or nipple **40** thus locking the boxes in stacked position in the relationship illustrated in FIGURE 2.

At each corner of the box where the side walls and end walls join, the depending extension **38** is provided with a cut-out **48** which provides flexibility for the depending extension **38** to enable expansion thereof for engagement of and release of the lip **40** from the groove **46**. The cut-outs **48** may also be employed as handles if desired and will be substantially closed when superimposed over the top portion of an underlying box as illustrated in FIGURE 1.

The top edge of each end wall is provided with cut-outs or notches **50** and the top edge of each side wall is also provided with a pair of cut-outs or notches **52** and similar notches **54** and **56** are provided in the bottom edges of the walls to provide finger grips to facilitate the expansion of the downward extension **38** when in superimposed relation. The notches **50** and **52** do not go all of the way through the upper edge of the peripheral wall while the notches **54** and **56** extend all of the way through the extension **38** for communication with the notches **50** and **52** when aligned therewith to enable finger pressure to be exerted outwardly on the lower end portion of the extension **38** to disengage the lip or nipple **40** from the corresponding groove **46**. To facilitate removal and placement of the closure **26**, a notch or hand-hold **58** is provided in one or more edges thereof to facilitate lifting of the closure panel.

Referring now specifically to FIGURES 3–5, the stacking box construction illustrated therein is designated by reference numeral **60** and includes a bottom wall **62** comparable to the bottom wall **12** in FIGURES 1 and 2. Upstanding from the side edges of the bottom wall is a pair of side walls **64** and **66**. Interconnecting the side walls **64** and **66** is a pair of end walls **68** and **70**. The upper surface of the bottom **62** is provided with a plurality of indentations or recesses **72** for receiving an article or articles therein in a manner similar to the recesses **22** in the bottom wall **12** in the structure illustrated in FIGURES 1 and 2.

The upper edge of the side and end walls is provided with a bevelled inner corner **74** for receiving a closure lid or top **76** that is orientated flush with the top edge of the walls **78** when in closing position.

As illustrated in FIGURES 3–5, the side walls **64** and **66** converge upwardly slightly and the end walls **68** and **70** also converge upwardly thereby leaving a space between the upper portion of adjacent boxes **60** as illustrated in FIGURE 4. Each side wall **64** and **66** and end walls **68** and **70** is provided with a groove **80** of semicylindrical configuration with the groove **80** extending peripherally of the box **60** at a point adjacent to but spaced below the top edge **78** of the box. Each side wall **64** and **66** is provided with a depending or extending portion **82** which has longitudinal semicylindrical projections **84** thereon for

snapping into the groove **80** for interlocking the stacked boxes as illustrated in FIGURE 4. The end walls **68** and **70** have similar depending lower edges or extensions **86**. The extensions **82** and **86** are separated from each other by a cut-out notch **87** at the corner of the box **60** for enabling the extensions **82** and **86** to flex so that the projections or ribs **84** may snap into the groove **80** of an underlying box.

As illustrated in FIGURE 3, the lowermost box has the side wall **66** thereof provided with a centrally located notch or recess **88** therein while the other side wall **64** is provided with a pair of cut-away portions or notches **90**. In stacking the boxes, the boxes are orientated with the side wall **66** underlying and overlying the side wall **64** so that the lower edge of the side walls will have an alternate central recess **18** and the end recesses or notches **90** for reception of an adjacent stack of boxes which will have an opposite arrangement, that is, the lowermost box will have end notches **90** and a central projection at the center for interlocking interengagement with the adjacent stack of boxes which will prevent relative longitudinal movement between the boxes and relative vertical movement. The end walls **68** and **70** have an identical alternate arrangement of a central notch and end notches on the extension **86** for interlocking the ends to prevent relatively lateral movement between the ends of adjacent stacked boxes as well as preventing relative vertical movement due to the engagement of the lower ends of the extensions **82** and **86** and the manner in which the notches **88** and **90** are arranged to receive the opposite orientation of the notches and projections on adjacent boxes. This arrangement is illustrated in FIGURE 4 and serves as a means for joining adjacent stacks of boxes orientated alongside of or in end-to-end abutting relation thereto in order to interlock the stacks to prevent relative longitudinal movement as well as vertical movement or relative lateral movement while at the same time effectively interlocking the boxes in each stack by the ribs or projections **84** being received in the grooves **80** and individually providing closure lids for each box. The spacing of the upper portions of the box structures as illustrated in FIGURE 4 provides for handgripping of the upper edges of the boxes if necessary and also enables air circulation between adjacent boxes which is desirable when the boxes are subjected to cool air or the like so that the cool air may circulate more expeditiously between the boxes.

What is claimed as new is as follows:

1. A stacking box construction comprising a container including upstanding side walls and upstanding end walls interconnecting the ends of the side walls, a bottom substantially perpendicular to the side and end walls and interconnecting the same for providing an open top container, each of said walls having means thereon adapted to interengage with corresponding means on a wall of a box disposed in adjacent horizontal aligned relation thereto, and means at the top and bottom of the box for interconnection with adjacent superimposed boxes, said interengaging means preventing relative vertical movement between adjacent horizontally aligned boxes and also preventing relative horizontal translatory movement between such boxes.

2. The structure as defined in claim **1** wherein said interengaging means on the walls of the boxes includes a projection on one wall and a corresponding recess on the other for interengagement.

3. The structure as defined in claim **2** wherein said projection and recess are substantially semicyclindrical in configuration.

4. The structure as defined in claim **2** wherein said projection is in the form of at least one downwardly and outwardly inclined projection, said recess including at least one downwardly and inwardly inclined notch for receiving the projection on an adjacent box.

5. The structure as defined in claim **1** wherein said means interconnecting superimposed boxes includes a pe-

ripheral groove adjacent the upper edge of the box, said walls of the box projecting below the bottom and including an inturned projection for interlocking engagement with the groove of an underlying box, the lower corner portion of each container disposed below the bottom being cut away to enable outward flexing of the portion of the walls having the projection thereon for snapping engagement with the groove.

6. The structure as defined in claim **5** wherein the top and bottom edge portions of the walls have recesses defined therein for receiving the fingers for facilitating outward flexing of the walls to disengage the interconnecting means.

7. A stacking box construction comprising a container including an upstanding peripheral wall having a bottom forming a closure within the peripheral wall thereby defining an open top container, said peripheral wall having a peripheral groove in the outer surface thereof adjacent the top edge, said peripheral wall having a depending projecting portion extending below the bottom and being provided with inwardly extending projecting means at the lower edges thereof for engagement in the groove, said portion of the peripheral wall depending below the bottom being laterally flexible to enable interlocking engagement of superimposed boxes by vertical downward movement of an upper box in relation to a lower box thereby enabling the interlocking action to occur as the boxes are being placed vertically in superimposed relation.

8. The structure as defined in claim **7** wherein the portion of the peripheral wall depending below the bottom includes cutout areas in spaced relation to facilitate lateral flexing thereof.

9. The structure as defined in claim **7** wherein the peripheral wall of the container is provided with circumferentially spaced projections and recesses for interengagement with similar containers disposed in side-by-side relation to prevent vertical and horizontal shifting of such containers in a plane paralleling the lower surface thereof thereby stabilizing a plurality of boxes disposed in vertically stacked relation and in stacked side-by-side relation.

10. The structure as defined in claim **9** wherein said projecting means and recess means being defined by the portion of the wall depending below the bottom thereby enabling the upper portion of the wall to converge inwardly while retaining the interengagement between side-by-side boxes.

References Cited

UNITED STATES PATENTS

1,175,028	3/1916	Walwig	220—24
1,543,800	6/1925	Shewry	220—97
1,591,760	7/1926	Haase	220—24 X
2,807,387	9/1957	Siciliano	220—41 X
2,860,814	11/1958	Duemler	220—60
3,049,265	8/1962	Van Moss	220—97
3,058,612	10/1962	Nagy	220—60
3,103,278	9/1963	Kuzma	220—23.6 X
888,611	5/1908	Heinze	220—23.4 X
2,849,151	8/1958	Heil	220—97

GEORGE E. LOWRANCE, *Primary Examiner.*

U.S. Cl. X.R.

220—97, 23.4