[00148] 48. The utility assembly of any one of embodiments 24 to 47, further comprising a locking mechanism for preventing unintentional separation of the modules while they are interlocked.

[00149] 49. The utility assembly of any one of embodiments 24 to 48, wherein the first utility module is configured for detachably attaching at least two second utility modules thereto.

[00150] 50. A mobile carrier unit comprising at least one carrier engagement surface, compatible for interlocking engagement in a detachable manner with a first engagement surface of a utility module, said carrier engagement surface having (i) one or more depressed locking locations each configured with a locking rib and at least one locking latch arresting location, configured for engagement with said first engagement surface of a utility module that comprises at least one locking latch and one or more projecting portions, each projecting portion being configured with a locking tongue, or (ii) at least one locking latch and one or more projecting portions each configured with a locking tongue for engagement with said first engagement surface of a utility module that comprises one or more depressed locking locations, each depressed locking locations configured with a locking rib and at least one locking latch arresting location.

[00151] 51. The mobile carrier unit of embodiment 50, wherein once associated with the utility module, said locking tongue becomes disposed in register with said one or more depressed locking locations, and at least one locking latch become disposed in register with said at least one locking latch arresting location.

[00152] 52. The mobile carrier unit of embodiment 50 or 51, configured for detachable interlocking engagement with one or more utility modules, each utility module comprising a first engagement surface.

[00153] 53. The mobile carrier unit of any one of embodiments 50 to 52, further comprising at least one of a manipulating arrangement and a locomotion system.

[00154] 54. An assembly comprising a mobile carrier unit of any one of embodiments 50 to 53 having at least one carrier engagement surface, and at a least one utility module having a first

Milwaukee Electric Tool, Keter Home and Garden Products – Ex. 2003 - Page 1048
Klein Tools v. Milwaukee Electric Tool, Keter Home and Garden Products
IPR2024-01400

engagement surface, the utility module being detachably interlocked with the mobile carrier unit by engaging said first engagement surface with said carrier engagement surface.

[00155] 55. The assembly of embodiment 54, wherein the mobile carrier unit and the at least one utility module are detachably interlocked with one another by a dovetail engagement mechanism, that comprises laterally projecting shoulders configured on one of the carrier engagement surfaces and the first engagement surface of a utility module, and a shoulder receiving recess configured on the other one of one of the carrier engagement surfaces and the first engagement surface of a utility module; where said laterally projecting shoulders are configured for sliding engagement with said shoulder receiving recess.

[00156] 56. The assembly of embodiment 55, wherein one or both of the carrier engagement surfaces and the first engagement surface of a respective utility module are configured with depressions, each accommodating respective laterally projecting locking shoulders.

[00157] 57. The assembly of embodiment 54, wherein the mobile carrier unit and the at least one utility module are detachably interlocked with one another by an undercut engagement mechanism, comprising lateral projections configured on one of the carrier engagement surfaces and the first engagement surface of a container unit, and a receiving recess configured on the other one of one of the carrier engagement surfaces and the first engagement surface of a utility module; where said lateral projections are configured for engagement with said receiving recess, such that interlocking engagement of the utility module and the carrier unit takes place by placing the first engagement surface of a utility module over the carrier engagement surface, such that the utility module's first engaging elements are disposed shifted over the respective carrier engaging elements of the carrier unit, and are then slidingly shifted to obtain sliding interlocking engagement therebetween.

[00158] 58. The assembly of any one of embodiments 54 to 57, further comprising a locking mechanism configured for preventing unintentional detaching of the utility module from the carrier unit.

Milwaukee Electric Tool, Keter Home and Garden Products – Ex. 2003 - Page 1049
Klein Tools v. Milwaukee Electric Tool, Keter Home and Garden Products
IPR2024-01400

[00159] 59. The assembly of embodiment 58, wherein the locking mechanism comprises a locking pin that is configured for snapingly protruding from one of the engagement surfaces into a designated nook on the other engagement surface.

[00160] 60. An interface coupling module comprising at least one engagement surface, compatible for interlocking engagement in a detachable manner with a first engagement surface of a utility module, said interface coupling module comprising an engagement surface having (i) one or more depressed locking locations each configured with a locking rib and at least one locking latch arresting location, configured for engagement with said first engagement surface of a utility module that comprises at least one locking latch and one or more projecting portions, each projecting portion being configured with a locking tongue, or (ii) at least one locking latch and one or more projecting portions each configured with a locking tongue for engagement with said first engagement surface of a utility module that comprises one or more depressed locking locations, each depressed locking locations configured with a locking rib and at least one locking latch arresting location

[00161] 61. The interface coupling module of embodiment 60, being configured for detachable or fixed attachment to a surface of an object.

[00162] 62. The interface coupling module of embodiment 60 or 61, being a cargo interface module for a utility vehicle configured for attaching one or more utility modules to the vehicle.

[00163] 63. The interface module of embodiment 60 or 61, being a surface mount for attaching utility modules

[00164] 64. The interface module of embodiment 60 or 61, being a tool mount or a tool rack.

[00165] 65. The interface module of embodiment 60 or 61, being a belt mount for mounting of utility modules to a workers belt;

[00166] 66. The interface module of embodiment 60 or 61, being an interface mount module for coupling two utility modules to one another.

Milwaukee Electric Tool, Keter Home and Garden Products – Ex. 2003 - Page 1050
Klein Tools v. Milwaukee Electric Tool, Keter Home and Garden Products
IPR2024-01400

BRIEF DESCRIPTION OF THE DRAWINGS

[00167] In order to better understand the subject matter that is disclosed herein and to exemplify how it may be carried out in practice, embodiments will now be described, by way of non-limiting examples only, with reference to the accompanying drawings, in which: Figs. 1A to 6G are directed to a first example of a locking mechanism, wherein:

[00168] Fig. 1A is a top perspective view of a container assembly according to an example of the present disclosure;

[00169] Fig. 1B is an exploded perspective view of the container assembly of Fig. 1A;

[00170] Fig. 1C is a bottom, front perspective view of Fig. 1B;

[00171] Fig. 1D is a bottom, rear perspective view of Fig. 1B;

[00172] Fig. 2A is a sectioned portion along line A-A in Fig. 1A;

[00173] Fig. 2B is a sectioned portion along line B-B in Fig. 1A;

[00174] Fig. 2C is a sectioned portion along line C-C in Fig. 1A;

[00175] Figs. 3A to 3D are consecutive steps illustrating locking engagement of the locking tongue of the second container with the respective locking rib of the first container;

[00176] Figs. 4A to 4D are consecutive steps illustrating locking engagement of the locking latch of the second container with the respective locking latch arresting location of the first container;

[00177] Figs. 5A to 5E schematically demonstrate modularity of a container assembly according to the disclosure;

[00178] Figs. 6A to 6G are various combinations of a modular container assembly according to examples of the present disclosure.

[00179] Figs. 7A to 12C ~~Figs 7 to 12~~ are directed to a carrier unit and another example of a locking mechanism, wherein:

Milwaukee Electric Tool, Keter Home and Garden Products – Ex. 2003 - Page 1051
Klein Tools v. Milwaukee Electric Tool, Keter Home and Garden Products
IPR2024-01400

[00180] Fig. 7A is container carrier assembly according to an example of the disclosure, illustrating a top, left perspective view of a container unit, mounted on top of a carrier unit;

[00181] Fig. 7B is a top, left perspective view of a second container unit, mounted on top of a first container unit, which in turn is mounted on top of a carrier unit according to an example of the present disclosure;

[00182] Fig. 8A is a top, left perspective view of a carrier unit, illustrating the carrier engagement surface in further detail;

[00183] Figs. 8B and 8C are a top and a bottom perspective view of a carrier unit, illustrating the container unit's first engagement surface in further detail;

[00184] Fig. 9A is a side section along line F-F in Fig. 7A, illustrating the container unit and the carrier unit unattached;

[00185] Fig. 9B is a side section along line F-F in Fig. 7A illustrating the container unit and the carrier unit attached;

[00186] Fig. 9C is a close-up view of Fig. 9B;

[00187] Fig. 9D is a sectioned view along line F-F in Fig. 7A illustrating the interlocking engagement of the carrier engaging elements together with the container unit's first engaging elements;

[00188] Fig. 10A is a sectioned view along line D-D in Fig. 7A, illustrating the locking mechanism;

[00189] Fig. 10B is an enlarged image of the portion marked M in Fig. 10A;

[00190] Fig. 11A illustrates different sizes of container units forming an assembly, at a tilted orientation;

[00191] Fig. 11B illustrates an assembled configuration balanced vertically relatively to the ground;

[00192] Fig. 12A shows a container assembly wherein the female coupler comprises two locking ribs extending at respective side edges of two neighboring depressed locking locations;

[00193] Fig. 12B is a section along line H-H in Fig. 12A;

[00194] Fig. 12C illustrates the utility module apart from the container and flipped, so as to expose the mating coupling mechanism.

[00195] Figs. 13A-13D, 14A-14C, 15A-15B, 16A-16B, 17, 18A-18C, and 19-24 are different embodiments and configurations of utility modules and utility assemblies according examples of this disclosure.

DETAILED DESCRIPTION OF EMBODIMENTS

[00196] Reference is first being made to Figs. 1A to 6G, directed to a first configuration of a coupling mechanism. For sake of convenience the utility modules are exemplified as containers and respectively the utility assembly is illustrates as a tool caddy. It is however appreciated that the utility modules can be of any type, shape or size, as discussed hereinabove and as will be exemplified below.

[00197] Attention is first directed to Figs. 1A to 4D, illustrating a container assembly generally designated 20, comprising four containers 22, 24, 26 and 28 disposed in a triple stage configuration, the stages designated A, B and C. In the illustrated example containers 24 and 26 of the second stage are half-size and overlap the footprint of the first stage container 22 and the third stage container 28, wherein the first container 22 is for example a hand tool container and containers 24 to 28 are organizers or the like.

[00198] The term 'first container' as used herein denotes a container bearing over a top face thereof at least one other container, said at least one other container denoted herein as a 'second container'. It is thus appreciated that a second container of a container assembly comprising three or more stages of containers' serves as second container when referred to the first stage container, and as a first container when referred to a third stage container mounted thereover. Accordingly, in the illustrated example of Figs. 1A-2C, container 22 is a first container and containers 24 and 26 are second containers, whilst they function as first containers when discussing locking arrangement with respect to third stage container 28.

[00199] Each of the containers is configured with a lid L constituting a top face of the respective container, said lids being pivotally attached and securely articulated to the respective container through a toggle locking latch 29. Each top face (see Fig.lB) is configured with several depressed locking locations 32 and it is seen that the at least two depressed locking locations are disposed behind one another along imaginary lines I, II and III (though not necessarily aligned).

[00200] Each such depressed locking location is in turn configured with a laterally projecting locking rib 36 extending from a rear portion of the depressed locking location 32 towards a front face of the container. The locking rib 36 has a flat top surface 38 substantially flush with a top surface of the respective lid L, and a slanting bottom surface 40. A front portion 46 of the depressed locking location 32 is slanted too, in the same orientation as bottom surface 40 (i.e. substantially parallel thereto).

[00201] Furthermore, the top face, namely lid L of the containers, is configured with at least one locking latch arresting location in the form of a recess 50 disposed at a front portion of the respective top face and configured with a slanted rear wall portion 52 and a right angled front wall portion 53.

[00202] A bottom face 54 of each container 22, 24, 26 and 28 is configured with several projecting portions 56, extending in register with the depressed locking locations 32, and it is seen that the at least two projecting portions 56 are disposed behind one another along the imaginary lines I, II and III (though not necessarily aligned).

[00203] Each projecting portions 56 is configured with a locking tongue 60 laterally projecting rearwards and having a slanted surface 62 corresponding with slanting surface 40 of locking rib 36. Also, a front portion 66 of the projecting portions 56 slants substantially parallel to the slanted surface 62 of the locking tongue 60.

[00204] It is essential that the at least two depressed locking locations 32 and the at least two projecting portions 56 be disposed behind one another (though not necessarily aligned), as exemplified by imaginary lines I, II and III (though not necessarily aligned).

[00205] A plunger-like locking latch 70 is disposed at a front portion of each container, said locking latch 70 disposed in register with the recesses 50 and configured with a slanting rear wall

Milwaukee Electric Tool, Keter Home and Garden Products – Ex. 2003 - Page 1054
Klein Tools v. Milwaukee Electric Tool, Keter Home and Garden Products
IPR2024-01400

portion 72 and a right angled front wall portion 74, corresponding with the sloping wall portions of the recesses 50. The locking latch 70 has an elongate finger engaging aperture 73 (Fig. 2A) accessible through an aperture 75 formed in register at a front wall face of the respective second container, said locking latch 70 being normally biased to project under force of coiled spring 71, such that the locking latch 70 is axially displaceable between a projecting, locked position and a temporary retracted position during transition into the locked position.

[00206] The locking latch 70 is typically single-handedly manipulable between its locking position and its releasing position, such that manipulation of the locking latch to disengage it from the locking latch arresting location 50 can be easily facilitated using one hand simultaneously with gripping the carrying handle 80. As seen in Figs. 1A-2C, manipulating the finger engaging aperture 73, being part of locking latch 70, is disposed opposite to and at finger-reach distance from the carrying handle 80 when the handle is at its carrying position tilted upwards. This enables a grab, release and go detachment of the second utility module from the first utility module in a simple single-handed operation.

[00207] When it is required to detachably attach a second container over a first container, the former is placed over the later (Fig. 3A), placing the projecting portions 56 within the depressed locking location 32 (Fig. 3B) with the locking tongues 60 engaging below and being gradually arrested by the respective locking ribs 36 arresting is obtained (Fig. 3C) until complete arresting is obtained (Fig. 3D). Simultaneously, as the locking tongues 60 arrest by the locking ribs 36, the locking latch 70 of the second container slides into the locking latch arresting location (recess 50) and finally snaps into locking engagement therewith. It is noted (Figs 4A to 4D) that first (Figs. 4B and 4C) the locking latch 70 displaces upwards against the biasing effect of spring 71, and when the second container reaches the final locking position over the first container, the locking latch 70 plunges into arresting position within the recess 50.

[00208] At the locked position the second container is attached over the top face of the first container, such that they can be moved as an integrated unit. Detaching of a second container from a first container is easily facilitated by unlocking, obtained by displacing the locking latch 70 upwards against the biasing effect of spring 71, whereby the second container can be displaced with respect to the first container and detached therefrom.

Milwaukee Electric Tool, Keter Home and Garden Products – Ex. 2003 - Page 1055
Klein Tools v. Milwaukee Electric Tool, Keter Home and Garden Products
IPR2024-01400

[00209] As further seen in Figs. 1A-4D, each of the containers 22, 24, 26 and 28, is configured at a front face thereof with a tiltable carrying handle 80, for carrying a respective container or the entire container assembly 20. Also seen, some of the containers can be configured with fender-like protectors 90 at their corners.

[00210] Further attention is now directed to Figs. 5A to 5E demonstrating examples of modularity of a container assembly according to the disclosure. Fig. 5A is a planner top view of a first container 94 and Figs. 5B to 5E illustrate second containers superimposed over the first container 94. In Fig. 5B a second container 96 is substantially as big as the first container 94, i.e. having the same footprint. In Fig. 5C a second container 98 is as wide as the first container 94, however narrower in depth, and disposed at a front portion of the first container. In Fig. 5D two second containers 99A and 99B are mounted over the first container 94 and occupy substantially the entire footprint thereof, whereby each of containers 99A and 99B is independently attachable and detachable from the first container 94, as exemplified hereinabove. In Fig. 5E two second containers 100A and 100B are positioned over the first container 94, occupying the entire width though narrower in depth and extending from a front portion of the first container 94.

[00211] Turning now to Figs. 6A to 6K, there are illustrated several examples of container assemblies, subassemblies and their components. Fig. 6A illustrates a disassembled container assembly collectively designated 104 and comprising a base container 106, a chest of drawers module 108 comprising three drawers, a tool caddy module 110, a compartmented storage module 112 and a half-sized compartmented storage module 114 (typically two of which). It is noted that the base container is configured for locomoting and comprises at a rear thereof wheels 116 and a telescopic handle 118.

[00212] As can be appreciated from Figs. 6B through 6D, various container assemblies are illustrated, the arrangement is such that in practice any module can constitute either a first container or a second container, as defined hereinabove (though it is more likely that base container 106 serves as a first container).

[00213] Figs. 6E and 6F illustrate a chest of drawers module 108, illustrated separately in Fig. 6E and mounted over a similar drawer module 108 in Fig. 6F. It is appreciated that the drawers of each module can be locked at their closed position to prevent spontaneous opening thereof

Milwaukee Electric Tool, Keter Home and Garden Products – Ex. 2003 - Page 1056
Klein Tools v. Milwaukee Electric Tool, Keter Home and Garden Products
IPR2024-01400

whilst carrying a module. Furthermore, each module 108 is configured with a pair of carrying handles 115 disposed at top side wall portions thereof, to facilitate carrying of the module.

[00214] In Fig. 6G there is illustrated a subassembly comprising a first container in the form of a tool caddy module 110 and second container in the form of a compartmented storage module 112 attached thereto, whilst the lid 119 of the first container is open facilitating access to the contents thereof.

[00215] Further attention is now directed to Figs. 7A to 16B, showing a third aspect of the disclosure, namely a utility module being a mobile carrier unit and comprising at least one carrier engagement surface, compatible for interlocking engagement in a detachable manner with a first engagement surface of a second utility module. For sake of example only, the second utility module exemplified in the annexed drawings is in the form of a utility container. It is however appreciated that the utility modules can be of any type, shape or size, as discussed hereinabove and as will be exemplified below. Accordingly, the term container unit as used in the following description denotes any type of a utility module, as discussed herein the specification.

[00216] Attention is first directed to Fig. 7A, illustrating a container carrier assembly generally designated 200 comprising a container unit 202 (utility module) mounted on top of a carrier unit 206. The carrier unit 206 is equipped with a telescopic manipulating handle 210, a pair of rear wheels 208 and a set of horizontally stabilizing support legs 212 at a front portion of the carrier unit 206. The carrier unit 206 and the container unit 202 are engaged in an interlocking engagement via their engagement surfaces, i.e. a carrier engagement surface 216 at a top face of the a carrier unit 206 (best seen in Fig. 8A), and the container unit's first engagement surface 220 (namely its bottom face; best seen in Figs. 8B and 8C). The container unit 202 is configured with yet a second engagement surface 226 (namely the container's top face), simulating the carrier engagement surface 216. The container unit 202 further comprises a locking mechanism 230 configured for arresting within a respective notch 231 at the carrier engagement surface 216, to thereby to prevent displacement and separation of the engagement surfaces 216 and 220 once they are interlocked, as later will be explained.

[00217] The carrier engagement surface 216 seen in greater detail in Fig. 8A, illustrates a top perspective view of a carrier unit 206 with the telescopic handle 210 in a retracted position. The

Milwaukee Electric Tool, Keter Home and Garden Products – Ex. 2003 - Page 1057
Klein Tools v. Milwaukee Electric Tool, Keter Home and Garden Products
IPR2024-01400

carrier engagement surface 216 comprises multiple carrier engaging elements 236, depressed from the surface, and designated for interlockingly receiving respective container unit's first engaging elements 240, projecting from the first engagement surface (bottom face) 220 of the container unit 202.

[00218] Each carrier engaging element 236, is a so-called female coupler and has a depressed locking location configured with at least one locking rib extending above a depressed surface and along a sliding path and having an open edge facing in a first sense. As seen in the drawings, it is generally constituted by a receiving recessed depression 244 in the carrier engagement surface 216, configured with a pair of facing locking ribs 248, forming the aforementioned recess. The locking ribs 248 extend substantially parallel to sliding path of the container unit 202 with respect to the carrier unit 206, said path (designated Pin Figs. 7A and 10B). Further noted, side walls 250 of depressions 244 are sloped in order to allow directing of a container unit's first engaging element 240, mounted upon it, to its interlocking position.

[00219] A corresponding coupler configured at the container unit is a so-called male coupler comprising a projecting locking location disposed in register with said depressed locking location and configured with at least one locking tongue extending along said engaging sliding path at a second sense, opposite to said first sense, and configured for arresting engagement at a space between said locking rib and depressed surface. As seen, a single container unit's engaging element 240 is generally constituted a downwardly projecting outwards protrusion 258, projecting from the bottom face 220 of the container 202.

[00220] In order to lock the container 202 over the carrier unit 206, upon placing the container 202 over the carrier engagement surface 216 of carrier unit 206 one must mount the container unit's first engaging elements 240 into the depressions 244 and then slide the container 202 along the sliding path P (i.e. towards the locking ribs 248) so that the engaging elements 240 engage below said projecting ribs/shoulders 248 and the engaging elements 240 are thus arrested at a space between said locking ribs and the depressed surface, as seen in Fig. 9C. Interlocking engagement of the container (or any other utility module) can be facilitated by a single male-female locking mechanism of the aforementioned type, or by a plurality of such locking mechanism, at any location over the carrier unit 206.

Milwaukee Electric Tool, Keter Home and Garden Products – Ex. 2003 - Page 1058
Klein Tools v. Milwaukee Electric Tool, Keter Home and Garden Products
IPR2024-01400

[00221] The shape and size of the locking members is modular as far as the depression 244 in the carrier engagement surface 216, can be single or double in size (e.g. 236 and 236A in Fig. 8A, respectively), so it is large enough to accommodate two container unit's first engaging elements 240, or two neighboring container unit's first engaging elements.

[00222] Locking/engaging and detaching of this configuration is similar to a single locking module.

[00223] The engagement and locking mechanism is modular in the sense that any first article can be easily and readily articulated to a surface of any second article, wherein the articulation is strong and firm (i.e. substantially motionless).

[00224] With further reference to Fig. 7B, there are illustrated two containers 202A and 202B articulated over one another, the arrangement being such that the bottom face of the intermediate container 202A serves for engaging with the top face of the carrier unit 206 and likewise, the top face of the intermediate container 202A serves for engaging with the bottom face of the top container 202B, as discussed herein above. The arrangement is such that each stage is lockingly secured by the locking mechanism 230, wherein each stage can be detached from the stage below upon releasing locking engagement of the respective locking mechanism 230.

[00225] The locking mechanism 230 is shown in further detail in Figs. 10A and 10B. The locking mechanism comprises a locking pin 231 normally biased by spring 233 such that a tip 235 projects from a bottom surface of the container 202 (see also Fig. 8B) and is configured for snap arresting within a respective notch 231 configured at the engagement surface 216 of the carrier unit 206 (seen also in Fig. 8A). The locking pin 231 is slidable within a race at the side wall of the container, and comprises a finger manipulating portion at 237 (accessible through an opening at the side wall of the container), for displacing the locking pin, against the biasing effect of spring 233, into its disengaged position, thus facilitating sliding the container along the path P into disengagement from the carrier unit (or respective other container or utility module). The carrier unit 206 is further configured at a bottom end, with a pair of stability supports 264 (Figs. 8A, 1lB), configured for supporting the carrier unit, with or without a container attached thereto, at an upright, i.e. vertical position, thus preventing it from tipping over, in particular with containers or any other utility module articulated thereto. Stability supports 264 can be,

Milwaukee Electric Tool, Keter Home and Garden Products – Ex. 2003 - Page 1059
Klein Tools v. Milwaukee Electric Tool, Keter Home and Garden Products
IPR2024-01400

according to a particular configuration, an extension of the telescopic handle 210, whereby the stability supports are functional as such only when the handle is fully contracted. However, in the illustration of Figs. 16A-16B the utility assembly 253 is maintained at its upright position owing to said stability supports 264 and further bearing over a side face 266 of the intermediate container 202A, being substantially flush with a bottom face of the stability supports 264.

[00226] With further reference to Figs. 12A to 12C there is illustrated a modification of articulation between a first utility module (container 300 in the particular example) and a second utility module (two work-piece supports 304 in the particular example). The container 300 is substantially similar to that illustrated in the previous examples, wherein the cover/lid 308 is configured with a plurality of female coupler members 310, each configured with a depressed locking location and a pair of locking ribs extending above the depressed surface and along a sliding path. The opposing locking ribs 312A and 312B have an open edge facing in a first sense (the introducing direction).

[00227] In the examples hereinbefore, engagement with a corresponding male coupler took place within the vicinity of a single coupling element, i.e. over two engaging ribs 312A and 312B of a single depressed locking location facing each other. However, in the example of Figs. 12A-12C engagement of the work-piece supports 304 takes place over two engaging ribs 312A and 312B of two neighboring depressed locking locations 308A and 308B. Accordingly, the male coupler of the two work-piece supports 304 is configured for arresting with the two engaging ribs 312A and 312B by two individual (separate) male couplers 316A and 316B, each configured for arresting one of the respective engaging ribs 312A and 312B. Arresting of the male projections 316 takes place as discussed before, by arresting below the respective engaging ribs, within the space at the depressed locking location. In spite of the relative narrow body structure of the work-piece supports 304, they are each configured with a locking mechanism 330, similar to locking mechanism 230 discussed hereinbefore.

[00228] Turning now to Figs. 13A-13D, 14A-14C, 15A-15B, 16A-16B, 17, 18A-18C, and 19-24, there are illustrated various examples of utility modules, utility assemblies and various configurations according to the disclosure.

Milwaukee Electric Tool, Keter Home and Garden Products – Ex. 2003 - Page 1060
Klein Tools v. Milwaukee Electric Tool, Keter Home and Garden Products
IPR2024-01400

[00229] Fig. 13A illustrates a utility module assembly generally designated 400, comprising a wheeled base container 402 supporting an intermediate container 404, bearing in turn a cooler box 406 and a power unit 408 disposed side by side over the intermediate container. At least the intermediate container 404 is configured at a bottom face thereof with a male-type coupling arrangement, for attachment over the cover of the base container, said cover configured with a respective female coupling arrangement. The cover of the intermediate container 404 is configured with a similar female coupling arrangement, and can thus engage with one the utility modules 406 and 408, each configured at its bottom face with a respective male-type coupling arrangement.

[00230] It is seen in Figs. 13B through 13D that the intermediate container 404 is fitted with a pivotal carrying handle 418 articulated at the top side walls thereof. The carrying handle has a thickness t and the arrangement is such that at the stowed/folded position (Figs. 13B, 13D) the handle 418 is received within a peripheral groove 422 extending over a top edge of the intermediate container 404 and a peripheral groove 424 extending at a bottom edge of the utility modules 408 and 406 (cooler box 406 and a power unit 408), such that the handle 418 does not constitute an obstacle in mounting and interlocking a utility module over another utility module. It is also seen that at least some of the utility modules are configured with side handles 428 serving both as carrying handles and as bumpers.

[00231] Figs. 14A to 14C illustrate a first utility module in the form of a container 430 supporting two detachable workpiece-piece supports 432 (attached as discussed herein before with reference to Figs. 12A-12C). Fig. 14C illustrates a utility module in the form of a work surface 436 configured with a vice race 438, so that a vice 440, or other workshop tools can be used. The workpiece-piece supports 432 are configured with a male type coupling having projecting locking locations 444 for engaging with respective female couplers.

[00232] In Figs. 15A and 15B there is illustrated a back-rack 450 being a substantially rigid platform having a carrying handle 451 and configured at one side thereof with a pair of adjustable shoulder harnesses 452, and an adjustable waist harness 454. The other side of the back-rack is configured as a universal utility mounting platform 458, configured with a plurality of attachment locations 460. In the illustrated example all attachment locations 460 are so-called female attachments (as discussed hereinabove in detail), however it is appreciated that the

Milwaukee Electric Tool, Keter Home and Garden Products – Ex. 2003 - Page 1061
Klein Tools v. Milwaukee Electric Tool, Keter Home and Garden Products
IPR2024-01400

attachment locations can just as well be male-type attachments, or a combination of male and female attachments. According to yet an example (not shown), one side of the carrying platform can be configured with male- type attachments, and an opposite side of the platform be configured with female-type attachments, wherein a used has the choice of attaching the platform to the harness system at an orientation of choice.

[00233] In Fig. 16A there is illustrated a utility module in the form of a wheeled carrying unit 464 (shown from a bottom side), similar to that disclosed in connection with Figs. 7A to 11B. The carrying unit 464 comprises a rigid platform 466 fitted at a top face thereof with a female/male attaching arrangement in accordance with the disclosure, such that any utility module according to the disclosure can be detachably attached thereto. Also provided is a telescopic manipulating handle 468 and a pair of wheels 466. The carrying unit can be fitted with a collapsible support plate configuring it into a pushcart (not shown).

[00234] Fig. 16B shows a utility assembly 276 comprising a wheeled base container 278 interlocked with a first intermediate container 280 mounted thereover (constituting a second stage of the assembly), and a second intermediate container 282 mounted thereover (constituting a third stage of the assembly 276), there being yet a fourth stage utility module container 284 mounted over the second intermediate container 282.

[00235] Whilst the second intermediate container 282 has a wider footprint than the first intermediate container 280, this does not constitute any difficulty as far as attaching it over the second intermediate container 282, and further, the top face of the second intermediate container 282 has a great surface suited for articulation thereof of several fourth stage utility modules (only one shown).

[00236] Fig. 17 shows a carrying bag 281 having soft side walls 283 (in the example illustrated made of fabric), however fitted with (integrally or detachable) an articulation platform base 284, said articulation platform made of a firm rigid material and is configured with four male-type coupling locations 288 of the type disclosed hereinabove. The carrying bag 281 has a carrying strap 290 useful for hand held or shoulder carrying of the bag.

Milwaukee Electric Tool, Keter Home and Garden Products – Ex. 2003 - Page 1062
Klein Tools v. Milwaukee Electric Tool, Keter Home and Garden Products
IPR2024-01400

[00237] Figure 18A shows a rigid coupling platform 300, configured with a plurality of female coupling locations (of the type disclosed herein) and further configured with bolt eyes 298 for securing to any desired surface, and carrying bars 313.

[00238] The coupling platform 300 can be attached for example to a truck bed 306 (Fig. 20), directly over the truck bed or over a cargo container attached to the truck. The coupling platform 300 can be attached to a wall, as in Fig. 18B, wherein a plurality of various utility modules can be articulated thereto. For example, utility modules can be an electric charger 315 of a power tool, a wall mounted sorting container 314, a hand tool rack 318 (Fig. 18C), a tool coupling adaptor 320 (Fig. 18C), etc.

[00239] In Fig. 19 there is illustrated a belt-mount 319 configured as a female coupler according to the disclosure, wherein a tool 321 or a bag/pouch configured with a male coupler can be detachably attached thereto.

[00240] In Fig. 21 there is illustrated a wall rack 326 comprising four utility modules in the form of articulation platforms 328 (mountable at different elevations about the wall supports

[00241] 327) each configured for bearing and attaching thereto any utility module in accordance with the disclosure.

[00242] In Fig. 22 there is illustrated a mobile work stand 340 comprising a wheeled base 342 supporting two racks 344 with four utility modules in the form of articulation platforms 346 (mountable at different elevations about the wall supports 327) each configured for bearing and attaching thereto any utility module (e.g. containers 348) in accordance with the disclosure.

[00243] In Fig. 23 the utility module is in the form of a dolly 352 configured with wheels 354 and having a top surface configured with an array of female type couplings, as discussed.

[00244] In Fig. 24 there is illustrated a utility coupling platform 358 suited for articulation to any desired article (e.g. a bag, a tool, etc.). The utility coupling platform is configured at least at one face thereof with a male coupling locations 360 mimicking the coupling arrangement of the disclosure, rendering it suitable for articulation with a coupling system according to the disclosure.

WHAT IS CLAIMED IS:

1. A container assembly comprising:

a first container comprising:

a first coupler extending from a first face of the first container, the first coupler comprises two sidewalls and a rib, the two sidewalls project from a depressed surface of the first face, the rib extends from at least one of the two sidewalls; and

a latch recess; and

a second container comprising:

a second coupler extending from a second face of the second container, the second coupler comprises a tongue that is offset from the second face, the tongue of the second container is engageable with the rib of the first container, the second coupler defines a first planar surface generally parallel to the second face and that faces away from the second face, and wherein the second coupler defines a second planar surface generally parallel to the second face and that faces towards the second face; and

a latch coupled to the second container, the latch positionable in a locked position in which the latch prevents disengagement of the first container and the second container when the tongue and rib are engaged.

2. The container assembly of claim 1, wherein the first and second couplers on the first and second containers, respectively, engage when the first and second containers are slid along a sliding path defined by the rib and the tongue.

3. The container assembly of claim 1, wherein the first face of the first container comprises a top face of the first container, and wherein the second face of the second container comprises a bottom face of the second container.

4. The container assembly of claim 1, wherein the rib extends in a first direction that is parallel to a bottom face of the first container.

Milwaukee Electric Tool, Keter Home and Garden Products – Ex. 2003 - Page 1064
Klein Tools v. Milwaukee Electric Tool, Keter Home and Garden Products
IPR2024-01400

5. The container assembly of claim 4, wherein the tongue extends in a second direction opposite the first direction.

6. The container assembly of claim 1, wherein the two sidewalls of the first coupler project from the depressed surface away from each other, and wherein the two sidewalls of the first coupler project from the depressed surface at an obtuse angle with respect to the depressed surface.

7. The container assembly of claim 1, wherein the rib is perpendicular to at least one of the two sidewalls, and , wherein the rib is parallel to the depressed surface of the first face.

8. The container assembly of claim 1, wherein a width of the second container is half-size a width of the first container.

9. The container assembly of claim 1, wherein at least one of the latch and the second coupler are actuated between a first position extending above the second face and a second position not extending above the second face.

10. The container assembly of claim 1, wherein when the tongue and rib are engaged:

a first side wall of the two sidewalls of the first coupler and a second sidewall of the second coupler interface to restrict displacement between the first container and the second container in a third direction perpendicular to the first direction and parallel to the first face of the first container.

11. A first container configured to be removably coupled to a second container, the first container comprising:

a first face;

a second face; and

a first coupler that extends from the first face, wherein the first coupler comprises two sidewalls and a rib, the two sidewalls project from a depressed surface of the first face, the rib extends from at least one of the two sidewalls;

Milwaukee Electric Tool, Keter Home and Garden Products – Ex. 2003 - Page 1065
Klein Tools v. Milwaukee Electric Tool, Keter Home and Garden Products
IPR2024-01400

a second coupler that extends from the second face, wherein the second coupler comprises a tongue that is offset from the second face, wherein the second coupler defines a first planar surface generally parallel to the second face and that faces away from the second face, and wherein the second coupler defines a second planar surface generally parallel to the second face and that faces towards the second face;

a latch recess; and

a latch, the latch positionable in a locked position in which the latch interlocks with a second latch recess in the second container restricting displacement between the first container and the second container.

12. The first container of claim 11, wherein the first face comprises a top face of the first container, and wherein the second face comprises a bottom face of the first container.

13. The first container of claim 11, wherein the rib extends in a first direction that is parallel to a bottom face of the first container, and wherein the tongue extends in a second direction opposite the first direction.

14. The first container of claim 11, wherein the two sidewalls of the first coupler project from the depressed surface away from each other, and wherein the two sidewalls of the first coupler project from the depressed surface at an obtuse angle with respect to the depressed surface.

15. The first container of claim 11, wherein the rib is perpendicular to at least one of the two sidewalls, and wherein the rib is parallel to the depressed surface of the first face.

16. A container assembly comprising:

a first container comprising:

a first coupler extending from a first face of the first container, the first coupler comprises two sidewalls and a rib, the two sidewalls project from a depressed surface of the first face, the rib extends from at least one of the two sidewalls, and the rib extends in a first direction that is parallel to the first face of the first container; and

Milwaukee Electric Tool, Keter Home and Garden Products – Ex. 2003 - Page 1066
Klein Tools v. Milwaukee Electric Tool, Keter Home and Garden Products
IPR2024-01400

a latch recess; and

a second container comprising:

a second coupler extending from a second face of the second container, the second coupler comprises a tongue that is offset from the second face, the tongue extends in a second direction opposite the first direction, the tongue of the second container is engageable with the rib of the first container, the second coupler defines a first planar surface generally parallel to the second face and that faces away from the second face, and wherein the second coupler defines a second planar surface generally parallel to the second face and that faces towards the second face; and

a latch coupled to the second container, the latch positionable in a locked position in which the latch prevents disengagement of the first container and the second container when the tongue and rib are engaged.

17. The container assembly of claim 16, wherein when the tongue and rib are engaged:

a portion of the first coupler and a portion of the second coupler interface to restrict displacement between the first container and the second container in a third direction perpendicular to the first direction and parallel to the first face of the first container.

18. The container assembly of claim 16, wherein at least one of the latch and the second coupler actuate between a first position and a second position, wherein the at least one of the latch and the second coupler extends above the second face when in the first position.

19. The container assembly of claim 16, wherein the first face of the first container comprises a top face of the first container, and wherein the second face of the second container comprises a bottom face of the second container.

20. The container assembly of claim 1, wherein the two sidewalls of the first coupler project from the depressed surface at an obtuse angle with respect to the depressed surface.

Milwaukee Electric Tool, Keter Home and Garden Products – Ex. 2003 - Page 1067
Klein Tools v. Milwaukee Electric Tool, Keter Home and Garden Products
IPR2024-01400

ABSTRACT

The present disclosure concerns a coupling mechanism for detachably attaching two or more utility modules to one another, utility assembles, mobile carriers and other attachable modules and articles.

Milwaukee Electric Tool, Keter Home and Garden Products – Ex. 2003 - Page 1068
Klein Tools v. Milwaukee Electric Tool, Keter Home and Garden Products
IPR2024-01400

Electronic Acknowledgement Receipt

EFS ID:	39059376
Application Number:	16752441
International Application Number:	
Confirmation Number:	9540
Title of Invention:	Utility Assembly and Coupling Mechanism
First Named Inventor/Applicant Name:	Yaron Brunner
Customer Number:	142078
Filer:	Derek Howard Campbell/Andrea Dietzel
Filer Authorized By:	Derek Howard Campbell
Attorney Docket Number:	066749-2584
Receipt Date:	03-APR-2020
Filing Date:	24-JAN-2020
Time Stamp:	16:44:13
Application Type:	Utility under 35 USC 111(a)

Payment information:

Submitted with Payment	no

File Listing:

Document Number	Document Description	File Name	File Size(Bytes)/ Message Digest	Multi Part /.zip	Pages (if appl.)
1	Applicant Response to Pre-Exam Formalities Notice	066749-2584_Response_to_Notice_of_Omitted_Items.pdf	79112 fb8ebf05d3cb56b10a1058e2d940311720fe2b63	no	3

Warnings:

Information:					
2	Miscellaneous Incoming Letter	066749-2584_Notice.pdf	175262 b7c2b7ac67a5c3d10ad5dbe45a6ea9242619cdbf	no	3
Warnings:					
Information:					
3	Specification	066749-2584_Marked_Sub_Spec.pdf	263192 311485bd4fb5c3fe26dd881b5d15cf5aced9262d	no	42
Warnings:					
Information:					
4	Specification	066749-2584_Clean_Sub_Spec.pdf	236230 2901a8a43ddd74735877f648bd9041167fb7d29d	no	42
Warnings:					
Information:					
			Total Files Size (in bytes):	753796	

This Acknowledgement Receipt evidences receipt on the noted date by the USPTO of the indicated documents, characterized by the applicant, and including page counts, where applicable. It serves as evidence of receipt similar to a Post Card, as described in MPEP 503.

<u>New Applications Under 35 U.S.C. 111</u>
If a new application is being filed and the application includes the necessary components for a filing date (see 37 CFR 1.53(b)-(d) and MPEP 506), a Filing Receipt (37 CFR 1.54) will be issued in due course and the date shown on this Acknowledgement Receipt will establish the filing date of the application.
<u>National Stage of an International Application under 35 U.S.C. 371</u>
If a timely submission to enter the national stage of an international application is compliant with the conditions of 35 U.S.C. 371 and other applicable requirements a Form PCT/DO/EO/903 indicating acceptance of the application as a national stage submission under 35 U.S.C. 371 will be issued in addition to the Filing Receipt, in due course.
<u>New International Application Filed with the USPTO as a Receiving Office</u>
If a new international application is being filed and the international application includes the necessary components for an international filing date (see PCT Article 11 and MPEP 1810), a Notification of the International Application Number and of the International Filing Date (Form PCT/RO/105) will be issued in due course, subject to prescriptions concerning national security, and the date shown on this Acknowledgement Receipt will establish the international filing date of the application.

IN THE UNITED STATES PATENT AND TRADEMARK OFFICE

Applicant: Milwaukee Electric Tool Corporation

Title: Utility Assembly and Coupling Mechanism

Appl. No.: 16/752,441

Filing Date: January 24, 2020

Examiner: To be determined

Art Unit: 3633

Confirmation No: 9540

Mail Stop Missing Parts
Commissioner for Patents
P.O. Box 1450
Alexandria, VA 22313-1450

RESPONSE TO NOTICE OF OMITTED ITEM(S) IN A NONPROVISIONAL APPLICATION UNDER 37 C.F.R. § 1.53(b)

This communication is responsive to the Notice of Omitted Item(s) in a Nonprovisional Application dated February 13, 2020, concerning the above-referenced patent application.

Amendments to the Specification begin on page 2 of this document.

Remarks begin on page 3 of this document.

Please amend the application as follows:

Milwaukee Electric Tool, Keter Home and Garden Products – Ex. 2003 - Page 1071
Klein Tools v. Milwaukee Electric Tool, Keter Home and Garden Products
IPR2024-01400

Amendments to the Specification

Applicant elects to reply to the Notice of Omitted Item(s) in a Nonprovisional Application under option III(A), namely by providing an amended specification.

Therefore, please replace the specification with the complete substitute specification submitted herewith. A complete marked-up copy of the substitute specification is also submitted herewith. No new matter is added by these amendments.

Milwaukee Electric Tool, Keter Home and Garden Products – Ex. 2003 - Page 1072
Klein Tools v. Milwaukee Electric Tool, Keter Home and Garden Products
IPR2024-01400

REMARKS

This reply is intended to be completely responsive to the Notice of Omitted Item(s) in a Nonprovisional Application dated February 13, 2020.

Specification Amendments

Page 1 of the Notice notes that Figures 7 and 12, as referenced in the specification as originally filed, are not included in the figures. Applicant has amended paragraph **[00179]** of the specification from "Figs 7 to 12" to "Figs. 7A-12C."

Applicant respectfully requests that the foregoing amendments to the Specification be made prior to examination of the present application. No new matter has been added with this amendment.

Applicant believes that the present application is in condition for allowance. Favorable consideration of the application as amended is respectfully requested. The Examiner is invited to contact the undersigned by telephone if it is felt that a telephone interview would advance the prosecution of the present application.

Although Applicant believes that no additional fee is required for this Response, the Commissioner is hereby authorized to charge any additional fees which may be required for this Request to Deposit Account No. 18-0882.

Respectfully submitted,

Date April 3, 2020

By /Derek H. Campbell/

Reinhart Boerner Van Deuren s.c.
Customer Number: 142078
Telephone: (414) 298-8374
Facsimile: (414) 298-8097

Derek H. Campbell
Attorney for Applicant
Registration No. 70,608

Milwaukee Electric Tool, Keter Home and Garden Products – Ex. 2003 - Page 1073
Klein Tools v. Milwaukee Electric Tool, Keter Home and Garden Products
IPR2024-01400

U.S. PATENT APPLICATION

for

UTILITY ASSEMBLY AND COUPLING MECHANISM

Inventors: Yaron Brunner
Grant T. Squiers
Christopher S. Hoppe
Steven W. Hyma

Milwaukee Electric Tool, Keter Home and Garden Products – Ex. 2003 - Page 1074
Klein Tools v. Milwaukee Electric Tool, Keter Home and Garden Products
IPR2024-01400

UTILITY ASSEMBLY AND COUPLING MECHANISM

CROSS-REFERENCE TO RELATED PATENT APPLICATION

[0001] This application is a continuation of U.S. Application No. 16/216,724, filed December 11, 2018, which is a continuation of U.S. Application No. 15/826,232, filed November 29, 2017, which is a continuation of International Application No. PCT/IL2017/050481, filed April 30, 2017, which claims priority to U.S. Provisional Application No. 62/459,076, filed February 15, 2017 and to U.S. Provisional Application No. 62/330,334, filed May 2, 2016, each of which are incorporated herein by reference in their entireties.

TECHNOLOGICAL FIELD

[0002] The present disclosure is directed to a container assembly and more specifically to a utility assembly comprising two or more detachably attachable utility modules. The disclosure is further concerned with a coupling mechanism facilitating detachably attaching the utility modules to one another.

[0003] The term 'utility module' is used hereinafter in its broad meaning and is meant to denote a variety of articles such as, storage containers, travel luggage, tool boxes, organizers, compacted work benches, cable storage, tools (e.g. hand tools, power generators and power sources), communication modules, carrying platforms, locomotion platforms, etc., of any shape and size, and wherein any utility module can be detachably attached to any other utility module.

[0004] The term 'utility assembly' as used herein denotes any set of utility modules configured for articulation to one another, either as a stationary unit or locomotive.

GENERAL DESCRIPTION

[0005] A first aspect of the disclosure concerns a coupling mechanism configured for readily detachably attaching any first article to any second article, wherein any first article and any second article can be any utility module.

[0006] The coupling mechanism comprises a male coupler at a face of one of the first utility module and the second utility module, and a female coupler at a face of the other one of the first utility module and the second utility module, said female coupler has a depressed locking

Milwaukee Electric Tool, Keter Home and Garden Products – Ex. 2003 - Page 1075
Klein Tools v. Milwaukee Electric Tool, Keter Home and Garden Products
IPR2024-01400

location configured with at least one locking rib extending above a depressed surface and along a sliding path, and having an open edge facing in a first sense; said male coupler has a projecting locking location disposed in register with said depressed locking location and configured with at least one locking tongue extending along said engaging sliding path at a second sense, opposite to said first sense, and configured for arresting engagement at a space between said locking rib and depressed surface, the coupling mechanism further comprises at least one locking member for arresting the first utility module with respect to said second utility module and preventing sliding displacement along said sliding path.

[0007] The arrangement is such that at a locked position of a utility assembly the at least one locking tongue of the male coupler engages below said at least one locking rib of the female coupler and the at least one locking member is engaged, thus preventing any respective displacement between the first utility module and the second utility module, and retaining the coupling mechanism at an engaged and locked position.

[0008] The term 'first utility module' as used herein denotes any utility module bearing at least one second utility module over a first surface thereof. The second utility module of a utility assembly may comprise three or more stages of utility modules, and functions as first utility module with respect to a third stage utility module mounted thereover and serving in turn as a second utility module.

[0009] According to certain embodiments, one or more female couplers are configured at the top face of the first utility module, and one or more male couplers are configured at the bottom face of the second utility module

[0010] The disclosed subject-matter is directed to a utility module configured with at least one of a male coupling mechanism and a female coupling mechanism of the disclosure, a module assembly comprising one or more utility modules of the aforementioned type and a set of utility modules of the aforementioned type.

[0011] According to a configuration of the first aspect, there is provide a utility assembly comprising at least a first utility module and at least a second utility module, and comprising a coupling mechanism configured between the first utility module and the second utility module;

Milwaukee Electric Tool, Keter Home and Garden Products – Ex. 2003 - Page 1076
Klein Tools v. Milwaukee Electric Tool, Keter Home and Garden Products
IPR2024-01400

said coupling mechanism comprising at one of a top face of the first utility module and a bottom face of the second utility module one or more depressed locking locations each configured with a locking rib, and at least one locking latch arresting location; and the other one of said top face of the first utility module and a bottom face of the second utility module comprises one or more projecting portions each configured with a locking tongue disposed in register with said one or more depressed locking locations, and at least one locking latch disposed in register with said at least one locking latch arresting location.

[0012] The arrangement is such that, at a locked position, the bottom face of the second utility module at least partially rests over the top face of the first utility module, and the one or more projecting tongues are arrested by the corresponding one or more locking ribs, and the at least one locking latch is arrested by corresponding at least one locking latch arresting location, thereby preventing sliding displacement between the first utility module and the second utility module, and further wherein disengaging the second utility module from the first utility module is facilitated by disengaging the at least one locking latch from the at least one locking latch arresting location.

[0013] Locking engagement between the second utility module and the first utility module is obtained when the one or more depressed locking locations and the one or more projecting portions are disposed behind one another (though not necessarily aligned).

[0014] According to a particular configuration of the coupling mechanism, the one or more depressed locking locations and the one or more locking latch arresting locations are configured at the top face of the first utility module, and the one or more projecting portions and the at least one locking latch are configured at the bottom face of the second utility module. According to this configuration, locking between the first utility module and the second utility module is obtained by positioning the second utility module over the second utility module such that one or more locking tongues of the projecting portions engages with one or more respective locking ribs of the depressed locking locations, and wherein the locking latch interlocks with the respective locking latch arresting location.

[0015] The arrangement being such that the attaching engagement between the second utility module and the first utility module takes place when the one or more locking tongues and the

Milwaukee Electric Tool, Keter Home and Garden Products – Ex. 2003 - Page 1077
Klein Tools v. Milwaukee Electric Tool, Keter Home and Garden Products
IPR2024-01400

corresponding one or more respective locking ribs are engaged, thereby preventing vertical separation between the utility modules (i.e. preventing lifting of the second utility module of the first utility module), and further when the locking latch is arrested by the respective locking latch arresting location, thereby preventing sliding displacement of the utility modules one with respect to the other (i.e. sliding displacement of the second module over the first module).

[0016] Disengaging the second utility module from the first utility module can be facilitated only after disengaging the locking latch from said locking latch arresting location.

[0017] According to a second aspect of the disclosure there is disclosed a coupling mechanism for a utility assembly comprising at least a first utility module and at least a second utility module, said coupling mechanism is configured between the first utility module and the second utility module and comprises at one of a top face of the first utility module and a bottom face of the second utility module with at least one depressed locking location configured with a locking rib, and at least one locking latch arresting location; and the other one of said top face of the first utility module and a bottom face of the second utility module comprises at least one projecting portion with a locking tongue disposed in register with said at least one depressed locking location, and at least one locking latch disposed in register with said at least one locking latch arresting location; and wherein at a locked position the bottom face at least partially rests over the top face, and the at least one projecting tongue is arrested by the corresponding at least one locking rib and the at least one locking latch is arrested by corresponding at least one locking latch arresting location, and further wherein disengaging the second utility module from the first utility module is facilitated by disengaging the at least one locking latch from the at least one locking latch arresting location.

[0018] Engaging the first and second utility modules into the locked position is provided by sliding the second utility module with respect to the first utility module along a sliding path defined by at least one of said at least one locking rib and said at least one locking tongue.

[0019] According to one particular configuration the at least one locking rib extends substantially parallel to the sliding path and according to another configuration the at least one locking rib extends substantially perpendicular and intersects the sliding path. A third aspect of the present disclosure is directed to a utility module being a mobile carrier unit and comprising at

Milwaukee Electric Tool, Keter Home and Garden Products – Ex. 2003 - Page 1078
Klein Tools v. Milwaukee Electric Tool, Keter Home and Garden Products
IPR2024-01400

least one carrier engagement surface, compatible for interlocking engagement in a detachable manner with a first engagement surface of a utility module.

[0020] The term carrier unit as used herein denotes any kind of propelled cart configured for detachably attaching and carrying load. The carrier unit may be a hand cart, a mobile tool cart, a mobile workshop, traveling luggage cart, a trolley, etc.

[0021] With particular reference to the third aspect, the carrier engagement surface can be larger than the utility module's first engagement surface corresponding with it. In this case, several utility modules may be interlocked simultaneously upon one carrier unit. According to one configuration there is disclosed a carrier unit comprising a manipulating arrangement, a locomotion system, and an engagement surface comprising one or more engaging elements. The carrier unit is designated for detachable interlocking engagement with one or more utility modules, each comprising a first engagement surface configured with one or more first engaging elements compatible for detachable interlocking engagement with the carrier engaging elements.

[0022] According to yet configuration there is disclosed an assembly comprising a carrier unit comprising an engagement surface comprising one or more engaging elements, and at least one utility module configured with at least one first engagement surface comprising one or more first engaging elements compatible for detachable interlocking engagement with the carrier unit's engaging elements.

[0023] According to a modification of this aspect, there is also provided a container unit comprising a top member configured with a second engagement surface of the utility module, said top member, according to one example constitutes a cover of the utility module.

[0024] The arrangement is such that a container unit can be readily and easily applied over and interlockingly articulated to a carrier unit, or over a utility module configured with a second engagement surface mimicking the first engagement surface second engagement surface mimicking the first engagement surface of the carrier unit.

[0025] Engagement between the carrier unit and the container, and further between two containers, is facilitated by any locking mechanism of the disclosure hereinabove and hereinafter.

Milwaukee Electric Tool, Keter Home and Garden Products – Ex. 2003 - Page 1079
Klein Tools v. Milwaukee Electric Tool, Keter Home and Garden Products
IPR2024-01400

[0026] According to a specific example, there is a latching mechanism, wherein the first engaging elements of the carrier unit are configured for interlocking engagement with engaging elements of the mating surface of the respective utility module. The latching mechanism may assume various configurations, e.g. male-female couplings, dovetail couplings, and the like. The arrangement being such that only a minor displacement is required in order to lockingly mount, and respectively detach, a utility module over the carrier unit.

[0027] According to one specific configuration, the detachable interlocking engagement mechanism between the carrier engaging elements and the utility module's first engaging elements is a dovetail engagement mechanism, comprising laterally projecting shoulders configured on one of the carrier engagement surfaces and the first engagement surface of a utility module, and a shoulder receiving recess configured on the other one of one of the carrier engagement surfaces and the first engagement surface of a utility module; where said laterally projecting shoulders are configured for sliding engagement with said shoulder receiving recess.

[0028] According to a particular configuration, one or both of the carrier engagement surfaces and the first engagement surface of a respective utility module are configured with depressions, each accommodating respective laterally projecting locking shoulders. Said dovetail engagement mechanism members constitute said engaging elements, wherein said carrier engaging elements comprise one of said dovetail engagement members, while the utility module's first engaging element comprises the respective said dovetail engagement member.

[0029] According to another configuration, the detachable interlocking engagement mechanism between the carrier engaging elements and the utility module's first engaging elements is an undercut engagement mechanism, comprising lateral projections configured on one of the carrier engagement surfaces and the first engagement surface of a container unit, and a receiving recess configured on the other one of one of the carrier engagement surfaces and the first engagement surface of a utility module; where said lateral projections are configured for engagement with said receiving recess.

[0030] Interlocking engagement of the utility module and the carrier unit takes place by placing the first engagement surface of a utility module over the carrier engagement surface, such that the utility module's first engaging elements are disposed shifted over the respective

Milwaukee Electric Tool, Keter Home and Garden Products – Ex. 2003 - Page 1080
Klein Tools v. Milwaukee Electric Tool, Keter Home and Garden Products
IPR2024-01400

carrier engaging elements of the carrier unit, and are then slidingly shifted to obtain sliding interlocking engagement therebetween.

[0031] The detachable interlocking engagement mechanism may further comprise a locking mechanism configured for preventing unintentional detaching of the slidingly engaging elements once they are fully interlocked, i.e. to prevent detaching of the utility module from the carrier unit or from another utility module.

[0032] According to one configuration, the locking mechanism, comprises a locking pin that is configured for snapingly protruding from one of the engagement surfaces into a designated nook on the other engagement surface. This prevents the engaging surfaces from sliding relatively to each other, and by that it prevents said engaging elements from being slidingly separated once interlocked.

[0033] According to one configuration, the carrier engagement surface of the carrier unit constitutes a top wall of the carrier unit, when the carrier unit is balanced horizontally to the ground, and wherein the utility module's first engagement surface constitutes a bottom wall of the container unit, when the utility module is balanced horizontally to the ground. The utility module can further comprise a second engagement surface constituting its top wall, or a cover, when the utility module is balanced horizontally to the ground. The second engagement surface of the utility module simulates the carrier engagement surface as it is compatible for engaging with another utility module's first engagement surface.

[0034] Any one or more of the following features, designs and configurations, can be implemented in a utility module, a utility assembly, locking mechanism, and the carrier unit and assembly according to the present disclosure, individually or in various combinations thereof:

[0035] A single locking rib can extend at rear end of a depressed locking location (i.e. the female coupler may comprise a single locking rib) and substantially perpendicular to the sliding path;

[0036] Two locking ribs can extend at side edges of a depressed locking location (i.e. the female coupler may comprise two locking ribs) and disposed substantially parallel to the sliding path;

[0037] Two locking ribs can each extend at a respective side edge of two neighboring depressed locking locations, said locking ribs disposed substantially parallel to the sliding path;

[0038] The utility assembly can be modular wherein a top face of a first utility module can interlock with a bottom face of a second utility module disposed thereover in a substantially fully overlapping relation, or with a bottom face of at least one second utility module only partially overlapping therewith;

[0039] A second utility module overlapping a significant portion of a first utility module can be configured with a single release latch for displacing several locking latches articulated therewith;

[0040] Two or more second utility modules can be mounted over a first utility module, each being independently detachable attachable over the first utility module;

[0041] The at least one second utility module is configured for snap-type locking over the first utility module;

[0042] A release latch for displacing the locking latch into disengagement from the locking latch arresting location can be disposed at a front face of the respective second utility module;

[0043] The at least one locking latch and the at least one locking latch arresting location can be disposed at a front portion of the respective utility modules;

[0044] At least one of the first utility module and the second utility module are configured with a gliding surface facilitating displacement and positioning the respective second utility module at the locking position with respect to the first utility module;

[0045] The gliding surface reduces tolerances between the projecting portion and the depressed locking location receiving same;

[0046] One or both of the locking tongue and locking rib can be configured with a slanting surface at corresponding orientation, along the sliding path, for reducing or substantially elimination tolerance therebetween;

[0047] One or both of a front edge of the projecting portion and a corresponding front edge of the depressed locking location can be slanted for gliding positioning of the second utility module into true locking position over the first utility module;

[0048] The locking latch can be configured for displacement in a direction substantially normal to a respective face of a utility module;

[0049] The locking latch can be spring biased and configured for normally projecting from a face of the respective first or second utility module;

[0050] The locking latch can be manipulable to be opened through an opening configured at a front wall of the respective utility module;

[0051] Corners of the utility modules can be reinforced;

[0052] One or more of the utility modules can be a container module, and the utility assembly can be a container assembly/tool caddy;

[0053] The container module can be compartmented and can be configured with sub-containers and sub-compartments;

[0054] The top face of the container module can be configured as a lid or as a functional component of the container module;

[0055] A lid of a second container can be opened also when articulated and locked in position over a first container;

[0056] A lid of a first container can be opened also when a second container is articulated and locked in position thereabove;

[0057] At least one of the container modules can be a locomoting container and can be configured with an arrangement for locomoting said container module. Where the locomoting container is attached to other container modules it can facilitate for locomoting the utility assembly;

[0058] The container modules can be configured with carrying arrangement disposed at any one or more of its faces. According to a particular configuration, a front face of the container modules is configured with a carrying handle and according to another configuration side faces of the container modules can be configured with a carrying handle;

[0059] Examples of utility modules can be any one or more of a cooler box, a workpiece grip, a power supply (e.g. power bank, generator), hand tools, power tools, a locomotive platform (e.g. a work dolly), powered or not, a tactical unit (e.g. military gear, scientific equipment, communications equipment, personal gear, outdoor gear, etc.);

[0060] A tool caddy can be configured with a carrying handle (e.g. telescopic);

[0061] A utility module can be a soft-shell container with at least a rigid face portion configured with a male/female coupler;

[0062] The utility module can be an interface coupling module, i.e. functions only as a coupling interface;

[0063] The interface coupling module can be attached to a surface of any element or object and by different arrangements, fixedly or detachably;

[0064] The interface coupling module can be a cargo interface module for a utility vehicle, so as to attach one or more utility modules to the vehicle;

[0065] The cargo interface module can be a bed cargo module, a roof rack module, etc.;

[0066] The interface coupling module can be a surface mount for attaching utility modules, e.g. a floor mount, wall mount, wall rack, etc.;

[0067] The interface coupling module can be a tool mount/rack;

[0068] The interface coupling module can be belt mount for mounting of utility modules (e.g. a hand tool) to a workers belt;

[0069] The interface coupling module can be an interface mount module for coupling two utility modules to one another, e.g. for articulating two utility modules, both configured with a

Milwaukee Electric Tool, Keter Home and Garden Products – Ex. 2003 - Page 1084
Klein Tools v. Milwaukee Electric Tool, Keter Home and Garden Products
IPR2024-01400

similar male coupler or a female coupler, and wherein the interface mount module is configured at both faces with another of male coupler or a female coupler;

[0070] The interface coupling module can be a back pack carrying module, for facilitating attachment and carrying of utility modules;

[0071] A top face of a utility module can be configured with a carrying handle, said carrying handle displaceable between a stowed position and a carrying position, wherein at the stowed position said carrying handle at least partially extends within a niche and does not to interfere with the coupling mechanism;

[0072] The carrier unit may include one or more auxiliary engagement surfaces positioned on an exterior face of the carrier unit. For example, an auxiliary engagement surface can be configured at a bottom face of the carrier unit;

[0073] The carrier unit may include a second engagement surface simulating/mimicking the first engagement surface of the utility module;

[0074] A utility module may be configured with one or more auxiliary first and second engagement surfaces;

[0075] The carrier engagement surface may be a connectivity platform detachably attached to the exterior surface of the carrier unit, facilitating a cart unit or a carrier unit according to the present disclosure;

[0076] One or both of the utility module's first and second engagement surfaces may be detachably attached to an exterior surface of the utility module;

[0077] The carrier engagement surface and the utility module's first engagement surface may be like elements;

[0078] The utility module's first and second engagement surfaces may be like elements;

[0079] The carrier unit's engaging elements and the utility module's first engaging elements may be similar elements;

Milwaukee Electric Tool, Keter Home and Garden Products – Ex. 2003 - Page 1085
Klein Tools v. Milwaukee Electric Tool, Keter Home and Garden Products
IPR2024-01400

[0080] One engagement surface may include several engaging elements and one locking mechanism;

[0081] The coupling mechanism is configured for spontaneous displacement into locking engagement within a locking receptacle, wherein manual interference is required only for unlocking the locking mechanism and detaching a utility module from a respective utility module or carrier unit;

[0082] The coupling mechanism can be a spring biased locking pin, normally projecting from a respective engagement surface;

[0083] One or both of the carrier unit and the utility module may further include a locking mechanism designated to prevent unintentional separation of the engagement surfaces while they are interlocked;

[0084] The locking mechanism is manipulable between an unlocked position in which said engagement surfaces may slide upon each other, and a locked state in which the engagement surfaces may not slide upon each other;

[0085] The locking mechanism may be configured with a biasing mechanism for snap arresting at least at its locked state;

[0086] The locking mechanism may be configured with a manually operated activating portion for switching between said unlocked and locked positions.

[0087] The carrier unit may be assembled together with other carrier units the same way it's assembled with the utility modules;

[0088] The locomotion system of the carrier unit may comprise a wheel system (e.g. axially fixed roller wheels, swivel wheels, etc.), a sliding platform, caterpillar tracks, etc;

[0089] The locomotion system of the carrier unit comprises, according to a particular example, several fixed axis wheels, wherein the perimeter of said wheels is tangent with a base edge of the carrier unit;

[0090] At an assembled configuration, where one or more utility modules are attached to the carrier unit, the assembly can be positioned vertically wherein a side face of the one or more containers rest over a supporting surface. According to a particular example, at this position the carrier unit and container assembly are configured with stability members for retaining their stability while positioned vertically to the ground;

[0091] The carrier unit may be stable while positioned horizontally to the ground, by a support system projecting from a bottom face thereof. The support system may comprise friction enhancing surfaces to restrict displacement of the assembly while placed over a bearing surface;

[0092] The carrier unit may be foldable to a more compact configuration;

[0093] The carrier unit may comprise an external storage box detachably interconnectable to its exterior walls;

[0094] The carrier unit may comprise a power supply detachably interconnectable to its exterior walls;

[0095] The carrier unit's transporting system may be motorized while powered via said power supply;

[0096] The carrier unit may further include a locking mechanism to insure interlocking connection of the engagement surfaces;

[0097] The container unit may comprise non-rigid portions;

[0098] The carrier unit may comprise at least one manipulating arrangement, configurable between a stowed position in which the manipulating arrangement is retracted, and a manipulating position in which the manipulating arrangement is extracted. The manipulating arrangement may be a telescopic or foldable handle;

[0099] The manipulating arrangement may be a gripping handle, a D-grip handle, a T-grip handle, a flexible strap, etc.

Milwaukee Electric Tool, Keter Home and Garden Products – Ex. 2003 - Page 1087
Klein Tools v. Milwaukee Electric Tool, Keter Home and Garden Products
IPR2024-01400

EMBODIMENTS

[00100] The present disclosure also encompasses embodiment as defined in the following numbered phrases. It should be noted that these numbered embodiments intended to add to this disclosure and is not intended in any way to be limiting.

[00101] 1. A coupling mechanism configured for readily detachably attaching a first utility module to a second utility module, the coupling mechanism comprising a male coupler at a face of one of the first utility module and the second utility module, and a female coupler at a face of the other one of the first utility module and the second utility module, said female coupler having a depressed locking location configured with at least one locking rib extending above a depressed surface and along a sliding path, and having an open edge facing in a first sense; said male coupler having a projecting locking location disposed in register with said depressed locking location and configured with at least one locking tongue extending along said engaging sliding path at a second sense, opposite to said first sense, and configured for arresting engagement at a space between said locking rib and depressed surface, the coupling mechanism further comprises at least one locking member for arresting the first utility module with respect to said second utility module and preventing sliding displacement along said sliding path.

[00102] 2. The coupling mechanism of embodiment 1, wherein said female coupler is configured at the top face of the first utility module, and the male coupler is configured at the bottom face of the second utility module.

[00103] 3. The coupling arrangement of embodiment 1 or 2, wherein the at least one locking rib extends substantially parallel to the sliding path.

[00104] 4. The coupling arrangement of embodiment 1 or 2, wherein the at least one locking rib extends substantially perpendicular and intersects the sliding path.

[00105] 5. The coupling arrangement of embodiment 1 or 2, wherein the female coupler comprises a single locking rib extends at rear end of a depressed locking location and substantially perpendicular to the sliding path.

[00106] 6. The coupling arrangement of embodiment 1 or 2, wherein the female coupler comprises two locking ribs extend at side edges of a depressed locking location and disposed substantially parallel to the sliding path.

[00107] 7. The coupling arrangement of embodiment 1 or 2, wherein the female coupler comprises two locking ribs each extend at a respective side edge of two neighboring depressed locking locations, said locking ribs disposed substantially parallel to the sliding path.

[00108] 8. A coupling mechanism for a utility assembly that comprises at least a first utility module and at least a second utility module, said coupling mechanism is configured between the first utility module and the second utility module; one of a top face of the first utility module and a bottom face of the second utility module comprises at least one depressed locking location configured with a locking rib, and at least one locking latch arresting location; and the other one of said top face of the first utility module and a bottom face of the second utility module comprises at least one projecting portion with a locking tongue disposed in register with said at least one depressed locking location, and at least one locking latch disposed in register with said at least one locking latch arresting location; and wherein at a locked position the bottom face at least partially rests over the top face, and the at least one projecting tongue is arrested by the corresponding at least one locking rib and the at least one locking latch is arrested by corresponding at least one locking latch arresting location, and further wherein disengaging the second utility module from the first utility module is facilitated by disengaging the at least one locking latch from the at least one locking latch arresting location, such that engaging the first and second utility modules into the locked position is provided by sliding the second utility module with respect to the first utility module along a sliding path defined by at least one of said at least one locking rib and said at least one locking tongue.

[00109] 9. The coupling arrangement of embodiment 8, wherein the at least one locking rib extends substantially parallel to the sliding path.

[00110] 10. The coupling arrangement of embodiment 8, wherein the at least one locking rib extends substantially perpendicular and intersects the sliding path.

Milwaukee Electric Tool, Keter Home and Garden Products – Ex. 2003 - Page 1089
Klein Tools v. Milwaukee Electric Tool, Keter Home and Garden Products
IPR2024-01400

[00111] 11. The coupling arrangement of embodiment 8, wherein a single locking rib extends at rear end of a depressed locking location and substantially perpendicular to the sliding path.

[00112] 12. The coupling arrangement of embodiment 8, wherein two locking ribs extend at side edges of a depressed locking location and disposed substantially parallel to the sliding path.

[00113] 13. The coupling arrangement of embodiment 8, wherein two locking ribs each extend at a respective side edge of two neighboring depressed locking locations, said locking ribs disposed substantially parallel to the sliding path.

[00114] 14. The coupling arrangement of any one of embodiments 8 to 13, further comprising a release latch for displacing the locking latch into disengagement from the locking latch arresting location can be disposed at a front face of the respective second utility module.

[00115] 15. The coupling arrangement of any one of embodiments 8 to 14, wherein the at least one locking latch and the at least one locking latch arresting location are disposed at a front portion of the respective utility modules.

[00116] 16. The coupling arrangement of any one of embodiments 8 to 15, wherein the locking latch is configured for displacement in a direction substantially normal to a respective face of a utility module.

[00117] 17. The coupling arrangement of any one of embodiments 8 to 16, wherein locking latch is spring biased and configured for normally projecting from a face of the respective first or second utility module.

[00118] 18. The coupling arrangement of any one of embodiments 8 to 17, wherein the locking latch is manipulable to be opened through an opening configured at a front wall of the respective utility module.

[00119] 19. The coupling arrangement of any one of embodiments 1 to 18, wherein one or both of the locking tongue and locking rib are configured with a slanting surface at corresponding orientation along the sliding path.

[00120] 20. The coupling arrangement of any one of embodiments 1 to 19, wherein one or both of a front edge of the projecting portion (or the projecting locking location) and a corresponding front edge of the depressed locking location are slanted for gliding positioning of the second utility module into locking position over the first utility module.

[00121] 21. The coupling mechanism of any one of embodiments 1 to 20, wherein the first utility module is configured for detachably attaching one or more second utility modules thereto.

[00122] 22. A coupling mechanism for a utility assembly comprising at least a first utility module and at least a second utility module, said coupling mechanism is configured between the first utility module and the second utility module and comprises at one of a top face of the first utility module and a bottom face of the second utility module with at least one depressed locking location configured with a locking rib, and at least one locking latch arresting location; and the other one of said top face of the first utility module and a bottom face of the second utility module comprises at least one projecting portion with a locking tongue disposed in register with said at least one depressed locking location, and at least one locking latch disposed in register with said at least one locking latch arresting location; and wherein at a locked position the bottom face at least partially rests over the top face, and the at least one projecting tongue is arrested by the corresponding at least one locking rib and the at least one locking latch is arrested by corresponding at least one locking latch arresting location, and further wherein disengaging the second utility module from the first utility module is facilitated by disengaging the at least one locking latch from the at least one locking latch arresting location.

[00123] 23. A utility assembly comprising at least a first utility module and at least a second utility module, and comprising a coupling mechanism according to any one of embodiments 1 to 21, the coupling mechanism being configured between the first utility module and the second utility module.

[00124] 24. A utility assembly comprising at least a first utility module and at least a second utility module, and comprising a coupling mechanism for readily detachably attaching the first and second utility modules, the coupling mechanism being configured between the first utility module and the second utility module; said coupling mechanism comprising at one of a top face of the first utility module and a bottom face of the second utility module one or more depressed

Milwaukee Electric Tool, Keter Home and Garden Products – Ex. 2003 - Page 1091
Klein Tools v. Milwaukee Electric Tool, Keter Home and Garden Products
IPR2024-01400

locking locations each configured with a locking rib, and at least one locking latch arresting location; and the other one of said top face of the first utility module and a bottom face of the second utility module comprises one or more projecting portions each configured with a locking tongue disposed in register with said one or more depressed locking locations, and at least one locking latch disposed in register with said at least one locking latch arresting location; such that at a locked position, the bottom face of the second utility module at least partially rests over the top face of the first utility module, and the one or more projecting tongues are arrested by the corresponding one or more locking ribs, and the at least one locking latch is arrested by corresponding at least one locking latch arresting location, thereby preventing sliding displacement between the first utility module and the second utility module, and disengaging the second utility module from the first utility module is facilitated by disengaging the at least one locking latch from the at least one locking latch arresting location.

[00125] 25. The utility assembly of embodiment 24, wherein the first and second utility modules are in a locking engagement when said one or more depressed locking locations and the one or more projecting portions are disposed behind one another.

[00126] 26. The utility assembly of embodiment 24 or 25, wherein said one or more depressed locking locations and said one or more locking latch arresting locations are configured at the top face of the first utility module, and the one or more projecting portions and the at least one locking latch are configured at the bottom face of the second utility module.

[00127] 27. The utility assembly of any one of embodiments 24 to 26, wherein at least one second utility module is configured for snap-type locking over the first utility module.

[00128] 28. The utility assembly of any one of embodiments 24 to 27 wherein engaging the first and second utility modules into the locked position is provided by sliding the second utility module with respect to the first utility module along a sliding path defined by at least one of said at least one locking rib and said at least one locking tongue.

[00129] 29. The utility assembly of any one of embodiments 24 to 28, wherein the at least one locking rib extends substantially parallel to the sliding path.

[00130] 30. The utility assembly of embodiment 29, wherein the at least one locking rib extends substantially perpendicular and intersects the sliding path.

[00131] 31. The utility assembly of embodiment 29, wherein a single locking rib extends at rear end of a depressed locking location and substantially perpendicular to the sliding path.

[00132] 32. The utility assembly of embodiment 29 wherein two locking ribs extend at side edges of a depressed locking location and disposed substantially parallel to the sliding path.

[00133] 33. The utility assembly of embodiment 29, wherein two locking ribs each extend at a respective side edge of two neighboring depressed locking locations, said locking ribs disposed substantially parallel to the sliding path.

[00134] 34. The utility assembly of any one of embodiments 24 to 33, wherein a top face of a first utility module interlocks with a bottom face of a second utility module disposed thereover in a substantially fully overlapping relation, or with a bottom face of at least one second utility module only partially overlapping therewith.

[00135] 35. The utility assembly of any one of embodiments 24 to 33, wherein the second utility module overlaps a significant portion of a first utility module and is configured with a single release latch for displacing several locking latches articulated therewith.

[00136] 36. The utility assembly of any one of embodiments 24 to 35, further comprising a release latch for displacing the locking latch into disengagement from the locking latch arresting location can be disposed at a front face of the respective second utility module.

[00137] 37. The utility assembly of any one of embodiments 24 to 36, wherein the locking latch is configured for displacement in a direction substantially normal to a respective face of a utility module.

[00138] 38. The utility assembly of any one of embodiments 24 to 37, wherein the locking latch is spring biased and configured for normally projecting from a face of the respective first or second utility module.

[00139] 39. The utility assembly of any one of embodiments 24 to 38, wherein two or more second utility modules can be mounted over a first utility module, each being independently detachable attachable over the first utility module.

[00140] 40. The utility assembly of any one of embodiments 24 to 39, wherein at least one of the first utility module and the second utility module are configured with a gliding surface facilitating displacement and positioning the respective second utility module at the locking position with respect to the first utility module.

[00141] 41. The utility assembly of any one of embodiments 24 to 40, wherein one or more of the utility modules is a container module, and the utility assembly is a container assembly or a tool caddy.

[00142] 42. The utility assembly of embodiment 41, wherein the container module is compartmented and optionally configured with sub-containers and sub-compartments.

[00143] 43. The utility assembly of embodiment 41 or 42, wherein a top face of the container module is configured as a lid or as a functional component of the container module.

[00144] 44. The utility assembly of any one of embodiments 41 to 43, wherein the container modules is a locomoting container, configured with an arrangement for locomoting said utility assembly.

[00145] 45. The utility assembly of any one of embodiments 41 to 44, wherein the container modules is configured with a carrying arrangement disposed at any one or more of its faces, optionally being a carrying handle.

[00146] 46. The utility assembly of any one of embodiments 24 to 40, wherein one or more of the utility modules is a soft-shell container with at least a rigid face portion.

[00147] 47. The utility assembly of any one of embodiments 24 to 40, wherein said first utility module is a mobile carrier unit.

[00148] 48. The utility assembly of any one of embodiments 24 to 47, further comprising a locking mechanism for preventing unintentional separation of the modules while they are interlocked.

[00149] 49. The utility assembly of any one of embodiments 24 to 48, wherein the first utility module is configured for detachably attaching at least two second utility modules thereto.

[00150] 50. A mobile carrier unit comprising at least one carrier engagement surface, compatible for interlocking engagement in a detachable manner with a first engagement surface of a utility module, said carrier engagement surface having (i) one or more depressed locking locations each configured with a locking rib and at least one locking latch arresting location, configured for engagement with said first engagement surface of a utility module that comprises at least one locking latch and one or more projecting portions, each projecting portion being configured with a locking tongue, or (ii) at least one locking latch and one or more projecting portions each configured with a locking tongue for engagement with said first engagement surface of a utility module that comprises one or more depressed locking locations, each depressed locking locations configured with a locking rib and at least one locking latch arresting location.

[00151] 51. The mobile carrier unit of embodiment 50, wherein once associated with the utility module, said locking tongue becomes disposed in register with said one or more depressed locking locations, and at least one locking latch become disposed in register with said at least one locking latch arresting location.

[00152] 52. The mobile carrier unit of embodiment 50 or 51, configured for detachable interlocking engagement with one or more utility modules, each utility module comprising a first engagement surface.

[00153] 53. The mobile carrier unit of any one of embodiments 50 to 52, further comprising at least one of a manipulating arrangement and a locomotion system.

[00154] 54. An assembly comprising a mobile carrier unit of any one of embodiments 50 to 53 having at least one carrier engagement surface, and at a least one utility module having a first

Milwaukee Electric Tool, Keter Home and Garden Products – Ex. 2003 - Page 1095
Klein Tools v. Milwaukee Electric Tool, Keter Home and Garden Products
IPR2024-01400

engagement surface, the utility module being detachably interlocked with the mobile carrier unit by engaging said first engagement surface with said carrier engagement surface.

[00155] 55. The assembly of embodiment 54, wherein the mobile carrier unit and the at least one utility module are detachably interlocked with one another by a dovetail engagement mechanism, that comprises laterally projecting shoulders configured on one of the carrier engagement surfaces and the first engagement surface of a utility module, and a shoulder receiving recess configured on the other one of one of the carrier engagement surfaces and the first engagement surface of a utility module; where said laterally projecting shoulders are configured for sliding engagement with said shoulder receiving recess.

[00156] 56. The assembly of embodiment 55, wherein one or both of the carrier engagement surfaces and the first engagement surface of a respective utility module are configured with depressions, each accommodating respective laterally projecting locking shoulders.

[00157] 57. The assembly of embodiment 54, wherein the mobile carrier unit and the at least one utility module are detachably interlocked with one another by an undercut engagement mechanism, comprising lateral projections configured on one of the carrier engagement surfaces and the first engagement surface of a container unit, and a receiving recess configured on the other one of one of the carrier engagement surfaces and the first engagement surface of a utility module; where said lateral projections are configured for engagement with said receiving recess, such that interlocking engagement of the utility module and the carrier unit takes place by placing the first engagement surface of a utility module over the carrier engagement surface, such that the utility module's first engaging elements are disposed shifted over the respective carrier engaging elements of the carrier unit, and are then slidingly shifted to obtain sliding interlocking engagement therebetween.

[00158] 58. The assembly of any one of embodiments 54 to 57, further comprising a locking mechanism configured for preventing unintentional detaching of the utility module from the carrier unit.

[00159] 59. The assembly of embodiment 58, wherein the locking mechanism comprises a locking pin that is configured for snapingly protruding from one of the engagement surfaces into a designated nook on the other engagement surface.

[00160] 60. An interface coupling module comprising at least one engagement surface, compatible for interlocking engagement in a detachable manner with a first engagement surface of a utility module, said interface coupling module comprising an engagement surface having (i) one or more depressed locking locations each configured with a locking rib and at least one locking latch arresting location, configured for engagement with said first engagement surface of a utility module that comprises at least one locking latch and one or more projecting portions, each projecting portion being configured with a locking tongue, or (ii) at least one locking latch and one or more projecting portions each configured with a locking tongue for engagement with said first engagement surface of a utility module that comprises one or more depressed locking locations, each depressed locking locations configured with a locking rib and at least one locking latch arresting location

[00161] 61. The interface coupling module of embodiment 60, being configured for detachable or fixed attachment to a surface of an object.

[00162] 62. The interface coupling module of embodiment 60 or 61, being a cargo interface module for a utility vehicle configured for attaching one or more utility modules to the vehicle.

[00163] 63. The interface module of embodiment 60 or 61, being a surface mount for attaching utility modules

[00164] 64. The interface module of embodiment 60 or 61, being a tool mount or a tool rack.

[00165] 65. The interface module of embodiment 60 or 61, being a belt mount for mounting of utility modules to a workers belt;

[00166] 66. The interface module of embodiment 60 or 61, being an interface mount module for coupling two utility modules to one another.

Milwaukee Electric Tool, Keter Home and Garden Products – Ex. 2003 - Page 1097
Klein Tools v. Milwaukee Electric Tool, Keter Home and Garden Products
IPR2024-01400

BRIEF DESCRIPTION OF THE DRAWINGS

[00167] In order to better understand the subject matter that is disclosed herein and to exemplify how it may be carried out in practice, embodiments will now be described, by way of non-limiting examples only, with reference to the accompanying drawings, in which: Figs. 1A to 6G are directed to a first example of a locking mechanism, wherein:

[00168] Fig. 1A is a top perspective view of a container assembly according to an example of the present disclosure;

[00169] Fig. 1B is an exploded perspective view of the container assembly of Fig. 1A;

[00170] Fig. 1C is a bottom, front perspective view of Fig. 1B;

[00171] Fig. 1D is a bottom, rear perspective view of Fig. 1B;

[00172] Fig. 2A is a sectioned portion along line A-A in Fig. 1A;

[00173] Fig. 2B is a sectioned portion along line B-B in Fig. 1A;

[00174] Fig. 2C is a sectioned portion along line C-C in Fig. 1A;

[00175] Figs. 3A to 3D are consecutive steps illustrating locking engagement of the locking tongue of the second container with the respective locking rib of the first container;

[00176] Figs. 4A to 4D are consecutive steps illustrating locking engagement of the locking latch of the second container with the respective locking latch arresting location of the first container;

[00177] Figs. 5A to 5E schematically demonstrate modularity of a container assembly according to the disclosure;

[00178] Figs. 6A to 6G are various combinations of a modular container assembly according to examples of the present disclosure.

[00179] Figs. 7A to 12C are directed to a carrier unit and another example of a locking mechanism, wherein:

Milwaukee Electric Tool, Keter Home and Garden Products – Ex. 2003 - Page 1098
Klein Tools v. Milwaukee Electric Tool, Keter Home and Garden Products
IPR2024-01400

[00180] Fig. 7A is container carrier assembly according to an example of the disclosure, illustrating a top, left perspective view of a container unit, mounted on top of a carrier unit;

[00181] Fig. 7B is a top, left perspective view of a second container unit, mounted on top of a first container unit, which in turn is mounted on top of a carrier unit according to an example of the present disclosure;

[00182] Fig. 8A is a top, left perspective view of a carrier unit, illustrating the carrier engagement surface in further detail;

[00183] Figs. 8B and 8C are a top and a bottom perspective view of a carrier unit, illustrating the container unit's first engagement surface in further detail;

[00184] Fig. 9A is a side section along line F-F in Fig. 7A, illustrating the container unit and the carrier unit unattached;

[00185] Fig. 9B is a side section along line F-F in Fig. 7A illustrating the container unit and the carrier unit attached;

[00186] Fig. 9C is a close-up view of Fig. 9B;

[00187] Fig. 9D is a sectioned view along line F-F in Fig. 7A illustrating the interlocking engagement of the carrier engaging elements together with the container unit's first engaging elements;

[00188] Fig. 10A is a sectioned view along line D-D in Fig. 7A, illustrating the locking mechanism;

[00189] Fig. 10B is an enlarged image of the portion marked M in Fig. 10A;

[00190] Fig. 11A illustrates different sizes of container units forming an assembly, at a tilted orientation;

[00191] Fig. 11B illustrates an assembled configuration balanced vertically relatively to the ground;

[00192] Fig. 12A shows a container assembly wherein the female coupler comprises two locking ribs extending at respective side edges of two neighboring depressed locking locations;

[00193] Fig. 12B is a section along line H-H in Fig. 12A;

[00194] Fig. 12C illustrates the utility module apart from the container and flipped, so as to expose the mating coupling mechanism.

[00195] Figs. 13A-13D, 14A-14C, l5A-15B, 16A-16B, 17, 18A-18C, and 19-24 are different embodiments and configurations of utility modules and utility assemblies according examples of this disclosure.

DETAILED DESCRIPTION OF EMBODIMENTS

[00196] Reference is first being made to Figs. 1A to 6G, directed to a first configuration of a coupling mechanism. For sake of convenience the utility modules are exemplified as containers and respectively the utility assembly is illustrates as a tool caddy. It is however appreciated that the utility modules can be of any type, shape or size, as discussed hereinabove and as will be exemplified below.

[00197] Attention is first directed to Figs. lA to 4D, illustrating a container assembly generally designated 20, comprising four containers 22, 24, 26 and 28 disposed in a triple stage configuration, the stages designated A, B and C. In the illustrated example containers 24 and 26 of the second stage are half-size and overlap the footprint of the first stage container 22 and the third stage container 28, wherein the first container 22 is for example a hand tool container and containers 24 to 28 are organizers or the like.

[00198] The term 'first container' as used herein denotes a container bearing over a top face thereof at least one other container, said at least one other container denoted herein as a 'second container'. It is thus appreciated that a second container of a container assembly comprising three or more stages of containers' serves as second container when referred to the first stage container, and as a first container when referred to a third stage container mounted thereover. Accordingly, in the illustrated example of Figs. 1A-2C, container 22 is a first container and containers 24 and 26 are second containers, whilst they function as first containers when discussing locking arrangement with respect to third stage container 28.

[00199] Each of the containers is configured with a lid L constituting a top face of the respective container, said lids being pivotally attached and securely articulated to the respective container through a toggle locking latch 29. Each top face (see Fig.lB) is configured with several depressed locking locations 32 and it is seen that the at least two depressed locking locations are disposed behind one another along imaginary lines I, II and III (though not necessarily aligned).

[00200] Each such depressed locking location is in turn configured with a laterally projecting locking rib 36 extending from a rear portion of the depressed locking location 32 towards a front face of the container. The locking rib 36 has a flat top surface 38 substantially flush with a top surface of the respective lid L, and a slanting bottom surface 40. A front portion 46 of the depressed locking location 32 is slanted too, in the same orientation as bottom surface 40 (i.e. substantially parallel thereto).

[00201] Furthermore, the top face, namely lid L of the containers, is configured with at least one locking latch arresting location in the form of a recess 50 disposed at a front portion of the respective top face and configured with a slanted rear wall portion 52 and a right angled front wall portion 53.

[00202] A bottom face 54 of each container 22, 24, 26 and 28 is configured with several projecting portions 56, extending in register with the depressed locking locations 32, and it is seen that the at least two projecting portions 56 are disposed behind one another along the imaginary lines I, II and III (though not necessarily aligned).

[00203] Each projecting portions 56 is configured with a locking tongue 60 laterally projecting rearwards and having a slanted surface 62 corresponding with slanting surface 40 of locking rib 36. Also, a front portion 66 of the projecting portions 56 slants substantially parallel to the slanted surface 62 of the locking tongue 60.

[00204] It is essential that the at least two depressed locking locations 32 and the at least two projecting portions 56 be disposed behind one another (though not necessarily aligned), as exemplified by imaginary lines I, II and III (though not necessarily aligned).

[00205] A plunger-like locking latch 70 is disposed at a front portion of each container, said locking latch 70 disposed in register with the recesses 50 and configured with a slanting rear wall

portion 72 and a right angled front wall portion 74, corresponding with the sloping wall portions of the recesses 50. The locking latch 70 has an elongate finger engaging aperture 73 (Fig. 2A) accessible through an aperture 75 formed in register at a front wall face of the respective second container, said locking latch 70 being normally biased to project under force of coiled spring 71, such that the locking latch 70 is axially displaceable between a projecting, locked position and a temporary retracted position during transition into the locked position.

[00206] The locking latch 70 is typically single-handedly manipulable between its locking position and its releasing position, such that manipulation of the locking latch to disengage it from the locking latch arresting location 50 can be easily facilitated using one hand simultaneously with gripping the carrying handle 80. As seen in Figs. 1A-2C, manipulating the finger engaging aperture 73, being part of locking latch 70, is disposed opposite to and at finger-reach distance from the carrying handle 80 when the handle is at its carrying position tilted upwards. This enables a grab, release and go detachment of the second utility module from the first utility module in a simple single-handed operation.

[00207] When it is required to detachably attach a second container over a first container, the former is placed over the later (Fig. 3A), placing the projecting portions 56 within the depressed locking location 32 (Fig. 3B) with the locking tongues 60 engaging below and being gradually arrested by the respective locking ribs 36 arresting is obtained (Fig. 3C) until complete arresting is obtained (Fig. 3D). Simultaneously, as the locking tongues 60 arrest by the locking ribs 36, the locking latch 70 of the second container slides into the locking latch arresting location (recess 50) and finally snaps into locking engagement therewith. It is noted (Figs 4A to 4D) that first (Figs. 4B and 4C) the locking latch 70 displaces upwards against the biasing effect of spring 71, and when the second container reaches the final locking position over the first container, the locking latch 70 plunges into arresting position within the recess 50.

[00208] At the locked position the second container is attached over the top face of the first container, such that they can be moved as an integrated unit. Detaching of a second container from a first container is easily facilitated by unlocking, obtained by displacing the locking latch 70 upwards against the biasing effect of spring 71, whereby the second container can be displaced with respect to the first container and detached therefrom.

Milwaukee Electric Tool, Keter Home and Garden Products – Ex. 2003 - Page 1102
Klein Tools v. Milwaukee Electric Tool, Keter Home and Garden Products
IPR2024-01400

[00209] As further seen in Figs. 1A-4D, each of the containers 22, 24, 26 and 28, is configured at a front face thereof with a tiltable carrying handle 80, for carrying a respective container or the entire container assembly 20. Also seen, some of the containers can be configured with fender-like protectors 90 at their corners.

[00210] Further attention is now directed to Figs. 5A to 5E demonstrating examples of modularity of a container assembly according to the disclosure. Fig. 5A is a planner top view of a first container 94 and Figs. 5B to 5E illustrate second containers superimposed over the first container 94. In Fig. 5B a second container 96 is substantially as big as the first container 94, i.e. having the same footprint. In Fig. 5C a second container 98 is as wide as the first container 94, however narrower in depth, and disposed at a front portion of the first container. In Fig. 5D two second containers 99A and 99B are mounted over the first container 94 and occupy substantially the entire footprint thereof, whereby each of containers 99A and 99B is independently attachable and detachable from the first container 94, as exemplified hereinabove. In Fig. 5E two second containers 100A and 100B are positioned over the first container 94, occupying the entire width though narrower in depth and extending from a front portion of the first container 94.

[00211] Turning now to Figs. 6A to 6K, there are illustrated several examples of container assemblies, subassemblies and their components. Fig. 6A illustrates a disassembled container assembly collectively designated 104 and comprising a base container 106, a chest of drawers module 108 comprising three drawers, a tool caddy module 110, a compartmented storage module 112 and a half-sized compartmented storage module 114 (typically two of which). It is noted that the base container is configured for locomoting and comprises at a rear thereof wheels 116 and a telescopic handle 118.

[00212] As can be appreciated from Figs. 6B through 6D, various container assemblies are illustrated, the arrangement is such that in practice any module can constitute either a first container or a second container, as defined hereinabove (though it is more likely that base container 106 serves as a first container).

[00213] Figs. 6E and 6F illustrate a chest of drawers module 108, illustrated separately in Fig. 6E and mounted over a similar drawer module 108 in Fig. 6F. It is appreciated that the drawers of each module can be locked at their closed position to prevent spontaneous opening thereof

Milwaukee Electric Tool, Keter Home and Garden Products – Ex. 2003 - Page 1103
Klein Tools v. Milwaukee Electric Tool, Keter Home and Garden Products
IPR2024-01400

whilst carrying a module. Furthermore, each module 108 is configured with a pair of carrying handles 115 disposed at top side wall portions thereof, to facilitate carrying of the module.

[00214] In Fig. 6G there is illustrated a subassembly comprising a first container in the form of a tool caddy module 110 and second container in the form of a compartmented storage module 112 attached thereto, whilst the lid 119 of the first container is open facilitating access to the contents thereof.

[00215] Further attention is now directed to Figs. 7A to 16B, showing a third aspect of the disclosure, namely a utility module being a mobile carrier unit and comprising at least one carrier engagement surface, compatible for interlocking engagement in a detachable manner with a first engagement surface of a second utility module. For sake of example only, the second utility module exemplified in the annexed drawings is in the form of a utility container. It is however appreciated that the utility modules can be of any type, shape or size, as discussed hereinabove and as will be exemplified below. Accordingly, the term container unit as used in the following description denotes any type of a utility module, as discussed herein the specification.

[00216] Attention is first directed to Fig. 7A, illustrating a container carrier assembly generally designated 200 comprising a container unit 202 (utility module) mounted on top of a carrier unit 206. The carrier unit 206 is equipped with a telescopic manipulating handle 210, a pair of rear wheels 208 and a set of horizontally stabilizing support legs 212 at a front portion of the carrier unit 206. The carrier unit 206 and the container unit 202 are engaged in an interlocking engagement via their engagement surfaces, i.e. a carrier engagement surface 216 at a top face of the a carrier unit 206 (best seen in Fig. 8A), and the container unit's first engagement surface 220 (namely its bottom face; best seen in Figs. 8B and 8C). The container unit 202 is configured with yet a second engagement surface 226 (namely the container's top face), simulating the carrier engagement surface 216. The container unit 202 further comprises a locking mechanism 230 configured for arresting within a respective notch 231 at the carrier engagement surface 216, to thereby to prevent displacement and separation of the engagement surfaces 216 and 220 once they are interlocked, as later will be explained.

[00217] The carrier engagement surface 216 seen in greater detail in Fig. 8A, illustrates a top perspective view of a carrier unit 206 with the telescopic handle 210 in a retracted position. The

Milwaukee Electric Tool, Keter Home and Garden Products – Ex. 2003 - Page 1104
Klein Tools v. Milwaukee Electric Tool, Keter Home and Garden Products
IPR2024-01400

carrier engagement surface 216 comprises multiple carrier engaging elements 236, depressed from the surface, and designated for interlockingly receiving respective container unit's first engaging elements 240, projecting from the first engagement surface (bottom face) 220 of the container unit 202.

[00218] Each carrier engaging element 236, is a so-called female coupler and has a depressed locking location configured with at least one locking rib extending above a depressed surface and along a sliding path and having an open edge facing in a first sense. As seen in the drawings, it is generally constituted by a receiving recessed depression 244 in the carrier engagement surface 216, configured with a pair of facing locking ribs 248, forming the aforementioned recess. The locking ribs 248 extend substantially parallel to sliding path of the container unit 202 with respect to the carrier unit 206, said path (designated Pin Figs. 7A and 10B). Further noted, side walls 250 of depressions 244 are sloped in order to allow directing of a container unit's first engaging element 240, mounted upon it, to its interlocking position.

[00219] A corresponding coupler configured at the container unit is a so-called male coupler comprising a projecting locking location disposed in register with said depressed locking location and configured with at least one locking tongue extending along said engaging sliding path at a second sense, opposite to said first sense, and configured for arresting engagement at a space between said locking rib and depressed surface. As seen, a single container unit's engaging element 240 is generally constituted a downwardly projecting outwards protrusion 258, projecting from the bottom face 220 of the container 202.

[00220] In order to lock the container 202 over the carrier unit 206, upon placing the container 202 over the carrier engagement surface 216 of carrier unit 206 one must mount the container unit's first engaging elements 240 into the depressions 244 and then slide the container 202 along the sliding path P (i.e. towards the locking ribs 248) so that the engaging elements 240 engage below said projecting ribs/shoulders 248 and the engaging elements 240 are thus arrested at a space between said locking ribs and the depressed surface, as seen in Fig. 9C. Interlocking engagement of the container (or any other utility module) can be facilitated by a single male-female locking mechanism of the aforementioned type, or by a plurality of such locking mechanism, at any location over the carrier unit 206.

[00221] The shape and size of the locking members is modular as far as the depression 244 in the carrier engagement surface 216, can be single or double in size (e.g. 236 and 236A in Fig. 8A, respectively), so it is large enough to accommodate two container unit's first engaging elements 240, or two neighboring container unit's first engaging elements.

[00222] Locking/engaging and detaching of this configuration is similar to a single locking module.

[00223] The engagement and locking mechanism is modular in the sense that any first article can be easily and readily articulated to a surface of any second article, wherein the articulation is strong and firm (i.e. substantially motionless).

[00224] With further reference to Fig. 7B, there are illustrated two containers 202A and 202B articulated over one another, the arrangement being such that the bottom face of the intermediate container 202A serves for engaging with the top face of the carrier unit 206 and likewise, the top face of the intermediate container 202A serves for engaging with the bottom face of the top container 202B, as discussed herein above. The arrangement is such that each stage is lockingly secured by the locking mechanism 230, wherein each stage can be detached from the stage below upon releasing locking engagement of the respective locking mechanism 230.

[00225] The locking mechanism 230 is shown in further detail in Figs. 10A and 10B. The locking mechanism comprises a locking pin 231 normally biased by spring 233 such that a tip 235 projects from a bottom surface of the container 202 (see also Fig. 8B) and is configured for snap arresting within a respective notch 231 configured at the engagement surface 216 of the carrier unit 206 (seen also in Fig. 8A). The locking pin 231 is slidable within a race at the side wall of the container, and comprises a finger manipulating portion at 237 (accessible through an opening at the side wall of the container), for displacing the locking pin, against the biasing effect of spring 233, into its disengaged position, thus facilitating sliding the container along the path P into disengagement from the carrier unit (or respective other container or utility module). The carrier unit 206 is further configured at a bottom end, with a pair of stability supports 264 (Figs. 8A, 1lB), configured for supporting the carrier unit, with or without a container attached thereto, at an upright, i.e. vertical position, thus preventing it from tipping over, in particular with containers or any other utility module articulated thereto. Stability supports 264 can be,

Milwaukee Electric Tool, Keter Home and Garden Products – Ex. 2003 - Page 1106
Klein Tools v. Milwaukee Electric Tool, Keter Home and Garden Products
IPR2024-01400

according to a particular configuration, an extension of the telescopic handle 210, whereby the stability supports are functional as such only when the handle is fully contracted. However, in the illustration of Figs. 16A-16B the utility assembly 253 is maintained at its upright position owing to said stability supports 264 and further bearing over a side face 266 of the intermediate container 202A, being substantially flush with a bottom face of the stability supports 264.

[00226] With further reference to Figs. 12A to 12C there is illustrated a modification of articulation between a first utility module (container 300 in the particular example) and a second utility module (two work-piece supports 304 in the particular example). The container 300 is substantially similar to that illustrated in the previous examples, wherein the cover/lid 308 is configured with a plurality of female coupler members 310, each configured with a depressed locking location and a pair of locking ribs extending above the depressed surface and along a sliding path. The opposing locking ribs 312A and 312B have an open edge facing in a first sense (the introducing direction).

[00227] In the examples hereinbefore, engagement with a corresponding male coupler took place within the vicinity of a single coupling element, i.e. over two engaging ribs 312A and 312B of a single depressed locking location facing each other. However, in the example of Figs. 12A-12C engagement of the work-piece supports 304 takes place over two engaging ribs 312A and 312B of two neighboring depressed locking locations 308A and 308B. Accordingly, the male coupler of the two work-piece supports 304 is configured for arresting with the two engaging ribs 312A and 312B by two individual (separate) male couplers 316A and 316B, each configured for arresting one of the respective engaging ribs 312A and 312B. Arresting of the male projections 316 takes place as discussed before, by arresting below the respective engaging ribs, within the space at the depressed locking location. In spite of the relative narrow body structure of the work-piece supports 304, they are each configured with a locking mechanism 330, similar to locking mechanism 230 discussed hereinbefore.

[00228] Turning now to Figs. 13A-13D, 14A-14C, 15A-15B, 16A-16B, 17, 18A-18C, and 19-24, there are illustrated various examples of utility modules, utility assemblies and various configurations according to the disclosure.

Milwaukee Electric Tool, Keter Home and Garden Products – Ex. 2003 - Page 1107
Klein Tools v. Milwaukee Electric Tool, Keter Home and Garden Products
IPR2024-01400

[00229] Fig. 13A illustrates a utility module assembly generally designated 400, comprising a wheeled base container 402 supporting an intermediate container 404, bearing in turn a cooler box 406 and a power unit 408 disposed side by side over the intermediate container. At least the intermediate container 404 is configured at a bottom face thereof with a male-type coupling arrangement, for attachment over the cover of the base container, said cover configured with a respective female coupling arrangement. The cover of the intermediate container 404 is configured with a similar female coupling arrangement, and can thus engage with one the utility modules 406 and 408, each configured at its bottom face with a respective male-type coupling arrangement.

[00230] It is seen in Figs. 13B through 13D that the intermediate container 404 is fitted with a pivotal carrying handle 418 articulated at the top side walls thereof. The carrying handle has a thickness t and the arrangement is such that at the stowed/folded position (Figs. 13B, 13D) the handle 418 is received within a peripheral groove 422 extending over a top edge of the intermediate container 404 and a peripheral groove 424 extending at a bottom edge of the utility modules 408 and 406 (cooler box 406 and a power unit 408), such that the handle 418 does not constitute an obstacle in mounting and interlocking a utility module over another utility module. It is also seen that at least some of the utility modules are configured with side handles 428 serving both as carrying handles and as bumpers.

[00231] Figs. 14A to 14C illustrate a first utility module in the form of a container 430 supporting two detachable workpiece-piece supports 432 (attached as discussed herein before with reference to Figs. 12A-12C). Fig. 14C illustrates a utility module in the form of a work surface 436 configured with a vice race 438, so that a vice 440, or other workshop tools can be used. The workpiece-piece supports 432 are configured with a male type coupling having projecting locking locations 444 for engaging with respective female couplers.

[00232] In Figs. 15A and 15B there is illustrated a back-rack 450 being a substantially rigid platform having a carrying handle 451 and configured at one side thereof with a pair of adjustable shoulder harnesses 452, and an adjustable waist harness 454. The other side of the back-rack is configured as a universal utility mounting platform 458, configured with a plurality of attachment locations 460. In the illustrated example all attachment locations 460 are so-called female attachments (as discussed hereinabove in detail), however it is appreciated that the

Milwaukee Electric Tool, Keter Home and Garden Products – Ex. 2003 - Page 1108
Klein Tools v. Milwaukee Electric Tool, Keter Home and Garden Products
IPR2024-01400

attachment locations can just as well be male-type attachments, or a combination of male and female attachments. According to yet an example (not shown), one side of the carrying platform can be configured with male- type attachments, and an opposite side of the platform be configured with female-type attachments, wherein a used has the choice of attaching the platform to the harness system at an orientation of choice.

[00233] In Fig. 16A there is illustrated a utility module in the form of a wheeled carrying unit 464 (shown from a bottom side), similar to that disclosed in connection with Figs. 7A to 11B. The carrying unit 464 comprises a rigid platform 466 fitted at a top face thereof with a female/male attaching arrangement in accordance with the disclosure, such that any utility module according to the disclosure can be detachably attached thereto. Also provided is a telescopic manipulating handle 468 and a pair of wheels 466. The carrying unit can be fitted with a collapsible support plate configuring it into a pushcart (not shown).

[00234] Fig. 16B shows a utility assembly 276 comprising a wheeled base container 278 interlocked with a first intermediate container 280 mounted thereover (constituting a second stage of the assembly), and a second intermediate container 282 mounted thereover (constituting a third stage of the assembly 276), there being yet a fourth stage utility module container 284 mounted over the second intermediate container 282.

[00235] Whilst the second intermediate container 282 has a wider footprint than the first intermediate container 280, this does not constitute any difficulty as far as attaching it over the second intermediate container 282, and further, the top face of the second intermediate container 282 has a great surface suited for articulation thereof of several fourth stage utility modules (only one shown).

[00236] Fig. 17 shows a carrying bag 281 having soft side walls 283 (in the example illustrated made of fabric), however fitted with (integrally or detachable) an articulation platform base 284, said articulation platform made of a firm rigid material and is configured with four male-type coupling locations 288 of the type disclosed hereinabove. The carrying bag 281 has a carrying strap 290 useful for hand held or shoulder carrying of the bag.

Milwaukee Electric Tool, Keter Home and Garden Products – Ex. 2003 - Page 1109
Klein Tools v. Milwaukee Electric Tool, Keter Home and Garden Products
IPR2024-01400

[00237] Figure 18A shows a rigid coupling platform 300, configured with a plurality of female coupling locations (of the type disclosed herein) and further configured with bolt eyes 298 for securing to any desired surface, and carrying bars 313.

[00238] The coupling platform 300 can be attached for example to a truck bed 306 (Fig. 20), directly over the truck bed or over a cargo container attached to the truck. The coupling platform 300 can be attached to a wall, as in Fig. 18B, wherein a plurality of various utility modules can be articulated thereto. For example, utility modules can be an electric charger 315 of a power tool, a wall mounted sorting container 314, a hand tool rack 318 (Fig. 18C), a tool coupling adaptor 320 (Fig. 18C), etc.

[00239] In Fig. 19 there is illustrated a belt-mount 319 configured as a female coupler according to the disclosure, wherein a tool 321 or a bag/pouch configured with a male coupler can be detachably attached thereto.

[00240] In Fig. 21 there is illustrated a wall rack 326 comprising four utility modules in the form of articulation platforms 328 (mountable at different elevations about the wall supports

[00241] 327) each configured for bearing and attaching thereto any utility module in accordance with the disclosure.

[00242] In Fig. 22 there is illustrated a mobile work stand 340 comprising a wheeled base 342 supporting two racks 344 with four utility modules in the form of articulation platforms 346 (mountable at different elevations about the wall supports 327) each configured for bearing and attaching thereto any utility module (e.g. containers 348) in accordance with the disclosure.

[00243] In Fig. 23 the utility module is in the form of a dolly 352 configured with wheels 354 and having a top surface configured with an array of female type couplings, as discussed.

[00244] In Fig. 24 there is illustrated a utility coupling platform 358 suited for articulation to any desired article (e.g. a bag, a tool, etc.). The utility coupling platform is configured at least at one face thereof with a male coupling locations 360 mimicking the coupling arrangement of the disclosure, rendering it suitable for articulation with a coupling system according to the disclosure.

WHAT IS CLAIMED IS:

1. A container assembly comprising:

a first container comprising:

a first coupler extending from a first face of the first container, the first coupler comprises two sidewalls and a rib, the two sidewalls project from a depressed surface of the first face, the rib extends from at least one of the two sidewalls; and

a latch recess; and

a second container comprising:

a second coupler extending from a second face of the second container, the second coupler comprises a tongue that is offset from the second face, the tongue of the second container is engageable with the rib of the first container, the second coupler defines a first planar surface generally parallel to the second face and that faces away from the second face, and wherein the second coupler defines a second planar surface generally parallel to the second face and that faces towards the second face; and

a latch coupled to the second container, the latch positionable in a locked position in which the latch prevents disengagement of the first container and the second container when the tongue and rib are engaged.

2. The container assembly of claim 1, wherein the first and second couplers on the first and second containers, respectively, engage when the first and second containers are slid along a sliding path defined by the rib and the tongue.

3. The container assembly of claim 1, wherein the first face of the first container comprises a top face of the first container, and wherein the second face of the second container comprises a bottom face of the second container.

4. The container assembly of claim 1, wherein the rib extends in a first direction that is parallel to a bottom face of the first container.

5. The container assembly of claim 4, wherein the tongue extends in a second direction opposite the first direction.

6. The container assembly of claim 1, wherein the two sidewalls of the first coupler project from the depressed surface away from each other, and wherein the two sidewalls of the first coupler project from the depressed surface at an obtuse angle with respect to the depressed surface.

7. The container assembly of claim 1, wherein the rib is perpendicular to at least one of the two sidewalls, and , wherein the rib is parallel to the depressed surface of the first face.

8. The container assembly of claim 1, wherein a width of the second container is half-size a width of the first container.

9. The container assembly of claim 1, wherein at least one of the latch and the second coupler are actuated between a first position extending above the second face and a second position not extending above the second face.

10. The container assembly of claim 1, wherein when the tongue and rib are engaged:

a first side wall of the two sidewalls of the first coupler and a second sidewall of the second coupler interface to restrict displacement between the first container and the second container in a third direction perpendicular to the first direction and parallel to the first face of the first container.

11. A first container configured to be removably coupled to a second container, the first container comprising:

a first face;

a second face; and

a first coupler that extends from the first face, wherein the first coupler comprises two sidewalls and a rib, the two sidewalls project from a depressed surface of the first face, the rib extends from at least one of the two sidewalls;

Milwaukee Electric Tool, Keter Home and Garden Products – Ex. 2003 - Page 1112
Klein Tools v. Milwaukee Electric Tool, Keter Home and Garden Products
IPR2024-01400

a second coupler that extends from the second face, wherein the second coupler comprises a tongue that is offset from the second face, wherein the second coupler defines a first planar surface generally parallel to the second face and that faces away from the second face, and wherein the second coupler defines a second planar surface generally parallel to the second face and that faces towards the second face;

a latch recess; and

a latch, the latch positionable in a locked position in which the latch interlocks with a second latch recess in the second container restricting displacement between the first container and the second container.

12. The first container of claim 11, wherein the first face comprises a top face of the first container, and wherein the second face comprises a bottom face of the first container.

13. The first container of claim 11, wherein the rib extends in a first direction that is parallel to a bottom face of the first container, and wherein the tongue extends in a second direction opposite the first direction.

14. The first container of claim 11, wherein the two sidewalls of the first coupler project from the depressed surface away from each other, and wherein the two sidewalls of the first coupler project from the depressed surface at an obtuse angle with respect to the depressed surface.

15. The first container of claim 11, wherein the rib is perpendicular to at least one of the two sidewalls, and wherein the rib is parallel to the depressed surface of the first face.

16. A container assembly comprising:

a first container comprising:

a first coupler extending from a first face of the first container, the first coupler comprises two sidewalls and a rib, the two sidewalls project from a depressed surface of the first face, the rib extends from at least one of the two sidewalls, and the rib extends in a first direction that is parallel to the first face of the first container; and

Milwaukee Electric Tool, Keter Home and Garden Products – Ex. 2003 - Page 1113
Klein Tools v. Milwaukee Electric Tool, Keter Home and Garden Products
IPR2024-01400

a latch recess; and

a second container comprising:

a second coupler extending from a second face of the second container, the second coupler comprises a tongue that is offset from the second face, the tongue extends in a second direction opposite the first direction, the tongue of the second container is engageable with the rib of the first container, the second coupler defines a first planar surface generally parallel to the second face and that faces away from the second face, and wherein the second coupler defines a second planar surface generally parallel to the second face and that faces towards the second face; and

a latch coupled to the second container, the latch positionable in a locked position in which the latch prevents disengagement of the first container and the second container when the tongue and rib are engaged.

17. The container assembly of claim 16, wherein when the tongue and rib are engaged:

a portion of the first coupler and a portion of the second coupler interface to restrict displacement between the first container and the second container in a third direction perpendicular to the first direction and parallel to the first face of the first container.

18. The container assembly of claim 16, wherein at least one of the latch and the second coupler actuate between a first position and a second position, wherein the at least one of the latch and the second coupler extends above the second face when in the first position.

19. The container assembly of claim 16, wherein the first face of the first container comprises a top face of the first container, and wherein the second face of the second container comprises a bottom face of the second container.

20. The container assembly of claim 1, wherein the two sidewalls of the first coupler project from the depressed surface at an obtuse angle with respect to the depressed surface.

ABSTRACT

The present disclosure concerns a coupling mechanism for detachably attaching two or more utility modules to one another, utility assembles, mobile carriers and other attachable modules and articles.

Milwaukee Electric Tool, Keter Home and Garden Products – Ex. 2003 - Page 1115
Klein Tools v. Milwaukee Electric Tool, Keter Home and Garden Products
IPR2024-01400

PTO/SB/08 (09-06)
Approved for use through 03/31/2007. OMB 0651-0031
U.S. Patent and Trademark Office: U.S. DEPARTMENT OF COMMERCE
Under the Paperwork Reduction Act of 1995, no persons are required to respond to a collection of information unless it contains a valid OMB control number.

Substitute for form 1449/PTO

INFORMATION DISCLOSURE STATEMENT BY APPLICANT

Date Submitted: March 31, 2020

(use as many sheets as necessary)

Sheet 1 of 2

Complete if Known	
Application Number	16/752,441
Filing Date	January 24, 2020
First Named Inventor	Yaron Brunner
Art Unit	3633
Examiner Name	To be determined
Attorney Docket Number	066749-2584

U.S. PATENT DOCUMENTS

Examiner Initials*	Cite No.[1]	Document Number Number-Kind Code[2] (*if known*)	Publication Date MM-DD-YYYY	Name of Patentee or Applicant of Cited Document	Pages, Columns, Lines, Where Relevant Passages or Relevant Figures Appear
	A1	8,505,729	08-13-2013	Sosnovsky et al.	
	A2	8,567,796	10-29-2013	Bar-Erez et al.	
	A3	8,979,100	03-17-2015	Bensman et al.	
	A4	9,511,491	12-06-2016	Brunner	
	A5	2009/0026901	01-29-2009	Nies, III et al.	
	A6	2015/0376917	12-31-2015	Brunner	
	A7	D395,533	06-23-1998	Morison et al.	
	A8	D653,832	02-07-2012	Vilkomirski et al.	
	A9	D661,858	06-12-2012	Lifshitz et al.	
	A10	D738,106	09-08-2015	Shitrit	
	A11	D816,334	05-01-2018	Brunner	
	A12	D826,510	08-21-2018	Brunner	

UNPUBLISHED U.S. PATENT APPLICATION DOCUMENTS

Examiner Initials*	Cite No.[1]	U.S. Patent Application Document Serial Number-Kind Code[2] (*if known*)	Filing Date of Cited Document MM-DD-YYYY	Name of Patentee or Applicant of Cited Document	Pages, Columns, Lines, Where Relevant Passages or Relevant Figures Appear

FOREIGN PATENT DOCUMENTS

Examiner Initials*	Cite No.[1]	Foreign Patent Document Country Code[3]-Number[4]-Kind Code[5] (*if known*)	Publication Date MM-DD-YYYY	Name of Patentee or Applicant of Cited Documents	Pages, Columns, Lines, Where Relevant Passages or Relevant Figures Appear	T[6]
	A13	CN302371147	03-27-2013	吉田攻一郎		
	A14	JPD1395115	08-16-2010	Toyoharu Senda		
	A15	TWI324578	05-11-2010	NAIDU VISHNU et al.		

Examiner Signature		Date Considered	

*EXAMINER: Initial if reference considered, whether or not citation is in conformance with MPEP 609. Draw line through citation if not in conformance and not considered. Include copy of this form with next communication to applicant. 1 Applicant's unique citation designation number (optional). 2 See Kinds Codes of USPTO Patent Documents at www.uspto.gov or MPEP 901.04. 3 Enter Office that issued the document, by the two-letter code (WIPO Standard ST.3). 4 For Japanese patent documents, the indication of the year of the reign of the Emperor must precede the serial number of the patent document. 5 Kind of document by the appropriate symbols as indicated on the document under WIPO Standard ST.16 if possible. 6 Applicant is to place a check mark here if English language Translation is attached.

This collection of information is required by 37 CFR 1.97 and 1.98. The information is required to obtain or retain a benefit by the public which is to file (and by the USPTO to process) an application. Confidentiality is governed by 35 U.S.C. 122 and 37 CFR 1.14. This collection is estimated to take 2 hours to complete, including gathering, preparing, and submitting the completed application form to the USPTO. Time will vary depending upon the individual case. Any comments on the amount of time you require to complete this form and/or suggestions for reducing this burden, should be sent to the Chief Information Officer, U.S. Patent and Trademark Office, P.O. Box 1450, Alexandria, VA 22313-1450. DO NOT SEND FEES OR COMPLETED FORMS TO THIS ADDRESS. **SEND TO: Commissioner for Patents, P.O. Box 1450, Alexandria, VA 22313-1450**.

If you need assistance in completing the form, call 1-800-PTO-9199 (1-800-786-9199) and select option 2.

PTO/SB/08 (09-06)
Approved for use through 03/31/2007. OMB 0651-0031
U.S. Patent and Trademark Office: U.S. DEPARTMENT OF COMMERCE
Under the Paperwork Reduction Act of 1995, no persons are required to respond to a collection of information unless it contains a valid OMB control number.

Substitute for form 1449/PTO

INFORMATION DISCLOSURE STATEMENT BY APPLICANT

Date Submitted: March 31, 2020

(use as many sheets as necessary)

Sheet	2	of	2

Complete if Known	
Application Number	16/752,441
Filing Date	January 24, 2020
First Named Inventor	Yaron Brunner
Art Unit	3633
Examiner Name	To be determined
Attorney Docket Number	066749-2584

NON PATENT LITERATURE DOCUMENTS

Examiner Initials*	Cite No.[1]	Include name of the author (in CAPITAL LETTERS), title of the article (when appropriate), title of the item (book, magazine, journal, serial, symposium, catalog, etc.) date, page(s), volume-issue number(s), publisher, city and/or country where published.	T[6]

Examiner Signature		Date Considered	

*EXAMINER: Initial if reference considered, whether or not citation is in conformance with MPEP 609. Draw line through citation if not in conformance and not considered. Include copy of this form with next communication to applicant. 1 Applicant's unique citation designation number (optional). 2 See Kinds Codes of USPTO Patent Documents at www.uspto.gov or MPEP 901.04. 3 Enter Office that issued the document, by the two-letter code (WIPO Standard ST.3). 4 For Japanese patent documents, the indication of the year of the reign of the Emperor must precede the serial number of the patent document. 5 Kind of document by the appropriate symbols as indicated on the document under WIPO Standard ST.16 if possible. 6 Applicant is to place a check mark here if English language Translation is attached.

This collection of information is required by 37 CFR 1.97 and 1.98. The information is required to obtain or retain a benefit by the public which is to file (and by the USPTO to process) an application. Confidentiality is governed by 35 U.S.C. 122 and 37 CFR 1.14. This collection is estimated to take 2 hours to complete, including gathering, preparing, and submitting the completed application form to the USPTO. Time will vary depending upon the individual case. Any comments on the amount of time you require to complete this form and/or suggestions for reducing this burden, should be sent to the Chief Information Officer, U.S. Patent and Trademark Office, P.O. Box 1450, Alexandria, VA 22313-1450. DO NOT SEND FEES OR COMPLETED FORMS TO THIS ADDRESS. **SEND TO: Commissioner for Patents, P.O. Box 1450, Alexandria, VA 22313-1450**.

If you need assistance in completing the form, call 1-800-PTO-9199 (1-800-786-9199) and select option 2.

(19)中华人民共和国国家知识产权局

(12)外观设计专利

(10)授权公告号 CN 302371147 S
(45)授权公告日 2013.03.27

(21)申请号 201230529536.4

(22)申请日 2012.11.02

(73)专利权人 京洛株式会社
地址 日本京都府

(72)设计人 吉田攻一郎

(74)专利代理机构 北京林达刘知识产权代理事务所（普通合伙）11277
代理人 刘新宇 张会华

(51)LOC(9)Cl.
09-08

图片或照片6幅 简要说明1页

(54)使用外观设计的产品名称
输送用托板

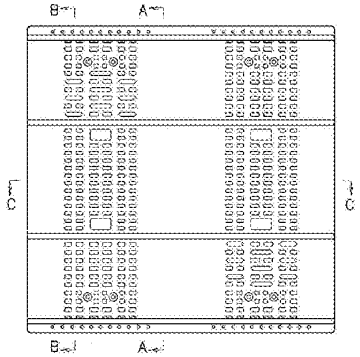

主视图

CN 302371147 S

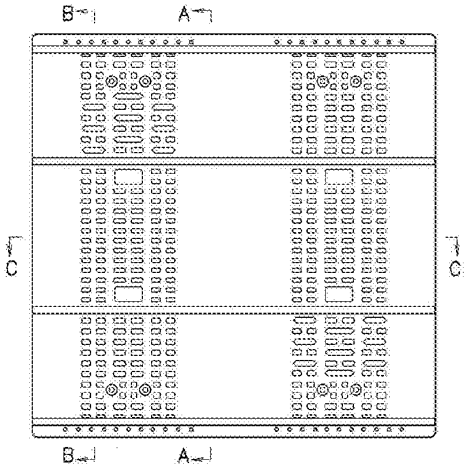

主视图

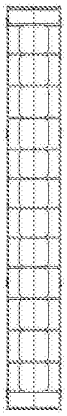

A-A 剖视图

右视图

B-B 剖视图

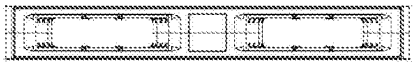

俯视图

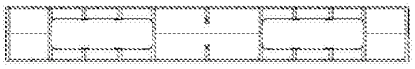

C-C 剖视图

Milwaukee Electric Tool, Keter Home and Garden Products – Ex. 2003 - Page 1119
Klein Tools v. Milwaukee Electric Tool, Keter Home and Garden Products
IPR2024-01400

本外观设计产品是输送用托板。其用途为：本产品是使用叉车等进行搬运时用于装载货物的搬运用托板。

本外观设计的设计要点在于形状的设计。

主视图是最能表明设计要点的图片。

后视图与主视图对称，省略后视图；左视图与右视图对称，省略左视图；仰视图与俯视图对称，省略仰视图。

Milwaukee Electric Tool, Keter Home and Garden Products – Ex. 2003 - Page 1120
Klein Tools v. Milwaukee Electric Tool, Keter Home and Garden Products
IPR2024-01400

（１９）【発行国・地域】日本国特許庁（ＪＰ）
（４５）【発行日】平成２２年8月１６日（２０１０．８．１６）
（１２）【公報種別】意匠公報（Ｓ）
（１１）【登録番号】意匠登録第１３９５１１５号（Ｄ１３９５１１５）
（２４）【登録日】平成２２年7月１６日（２０１０．７．１６）
（５４）【意匠に係る物品】運搬台車
【本意匠の意匠登録番号】意匠登録第１３７２６２３号（Ｄ１３７２６２３）
【本意匠に係る他の関連意匠の意匠登録番号】意匠登録第１３７２９４５号（Ｄ１３７２９４５）、意匠登録第１３９５１１７号（Ｄ１３９５１１７）
（５２）【意匠分類】Ｇ２－５００
（５１）【国際意匠分類（参考）】１２－０１、１２－０２、１２－０８、１２－１１、２１－０３
（２１）【出願番号】意願２００８－１１５８７（Ｄ２００８－１１５８７）
（２２）【出願日】平成２０年5月9日（２００８．５．９）
（７２）【創作者】
【氏名】千田　豊治
【住所又は居所】東京都渋谷区恵比寿１丁目８番５－７号　ジーオーピー株式会社内
（７３）【意匠権者】
【識別番号】５９７１４４４８４
【氏名又は名称】ジーオーピー株式会社
【住所又は居所】東京都渋谷区恵比寿１－８－５東洋ビル７Ａ
（７４）【代理人】
【識別番号】１０００７８６９５
【弁理士】
【氏名又は名称】久保　司
【審査官】本多　誠一
（５６）【参考文献】意登１３７２６２３　意登１３７２９４５
（５５）【意匠に係る物品の説明】本願意匠に係る物品は荷物を載置して手押し等で運搬する運搬台車に関するもので、フレーム上にベースを取付けた平面長方形の台車本体の長手方向の左右両側にそれぞれ縦列に３輪ずつキャスターを独自の並び方で設け、さらに、その間に２輪を配設し、全部で３列、計８個のものとした。また、台車本体の四隅のコーナー部に手押し棒が挿着される挿入孔を形成し、この挿入孔に手押し棒を着脱自在に立設した。
【図面】
【斜視図】

【正面図】

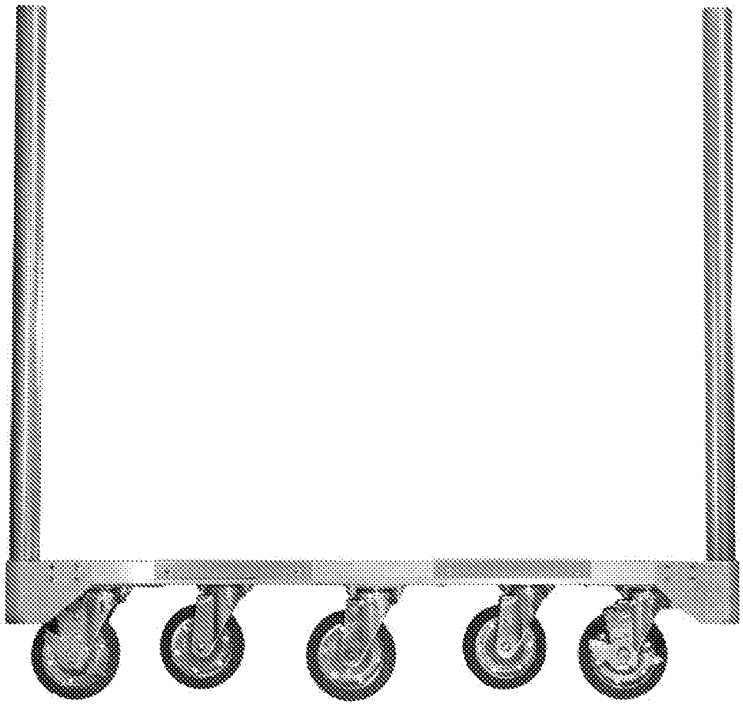

【右側面図】

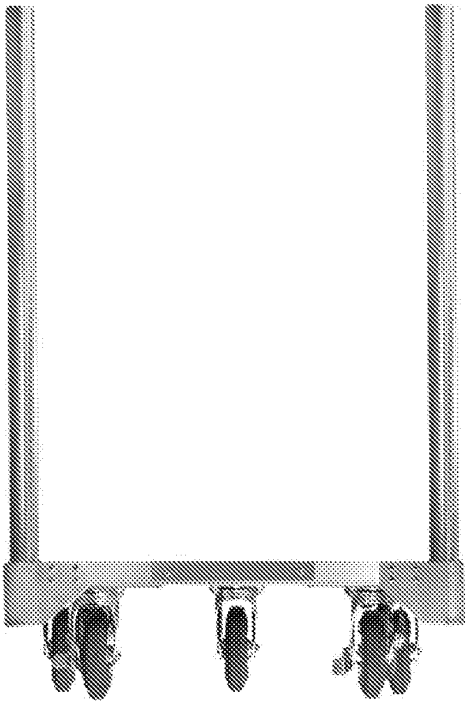

【平面図】

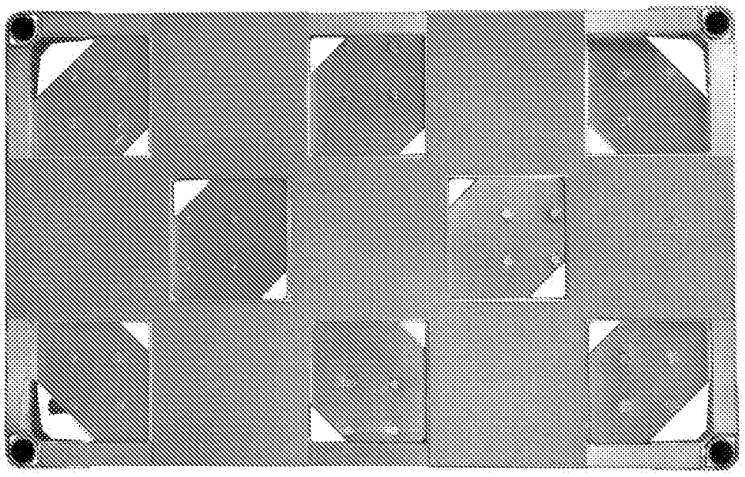

【底面図】

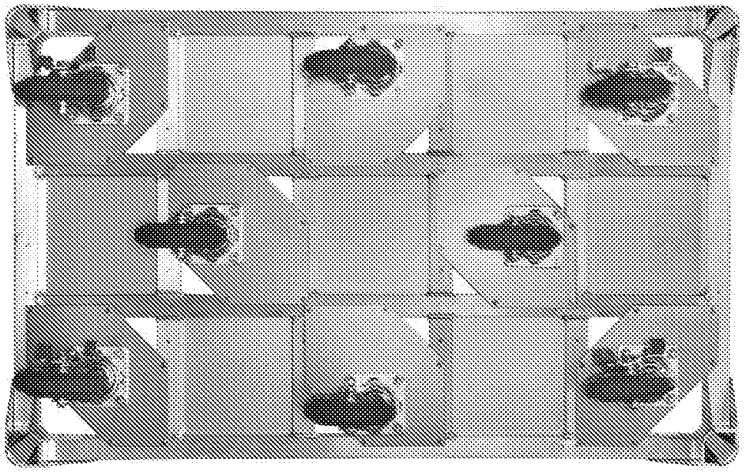

【手押し棒を外した状態の参考図】

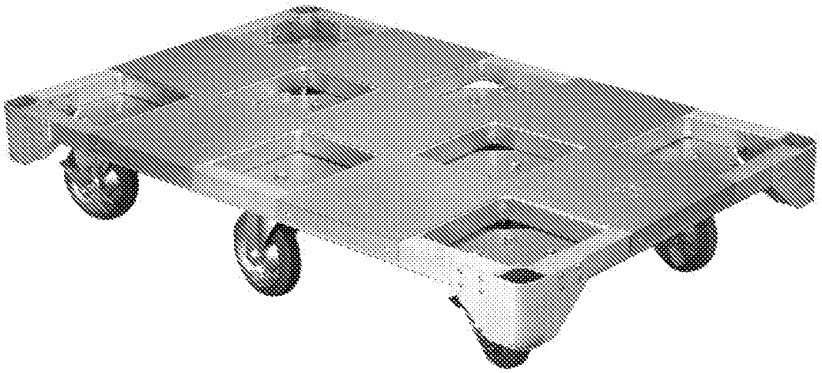

【背面図】

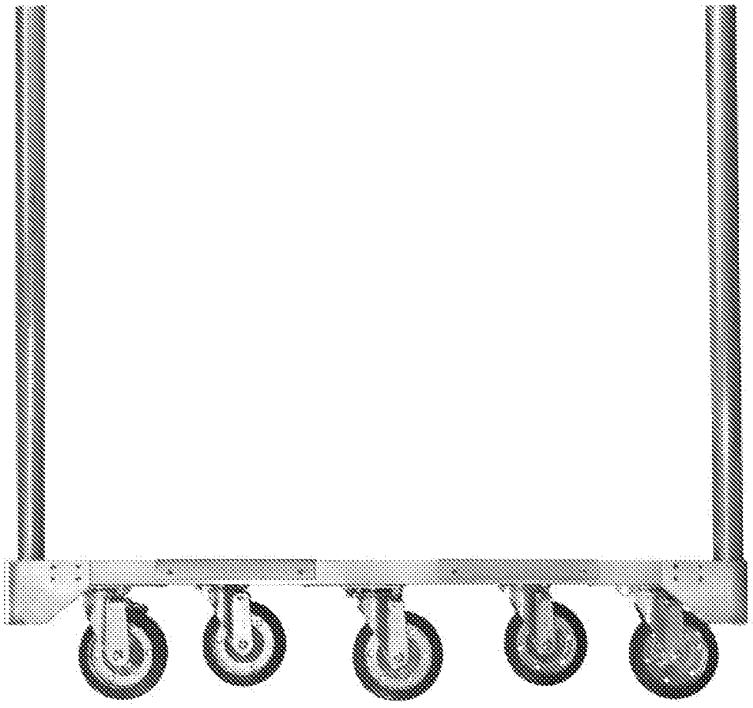

【左側面図】

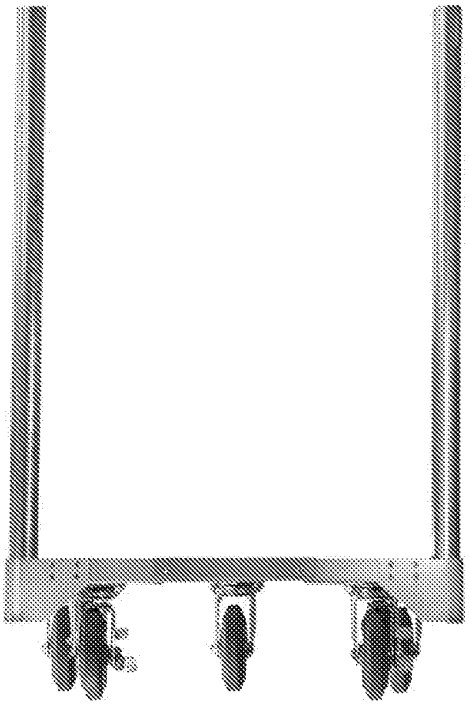

Espacenet

Bibliographic data: TWI324578 (B) — 2010-05-11

Durable pallet and pallet block

Inventor(s): NAIDU VISHNU [US]; BEERENSSON JAMES [US] ± (NAIDU, VISHNU, ; BEERENSSON, JAMES)

Applicant(s): CHEP TECHNOLOGY PTY LTD [AU] ± (CHEP TECHNOLOGY PTY LIMITED)

Classification: - international: *B65D19/24*
- cooperative: **B65D19/0073 (EP); B65D19/0095 (EP);** B65D2519/00034 (EP); B65D2519/00069 (EP); B65D2519/00104 (EP); B65D2519/00273 (EP); B65D2519/00293 (EP); B65D2519/00308 (EP); B65D2519/00323 (EP); B65D2519/00333 (EP); B65D2519/00378 (EP); B65D2519/00407 (EP); B65D2519/00412 (EP); B65D2519/00562 (EP); B65D2519/00567 (EP); B65D2519/00756 (EP); Y10S108/901 (EP)

Application number: TW20070113014 20070413

Priority number(s): US20060382148 20060508

Also published as: AU2007250025 (A1), AU2007250025 (B2), CY1120979 (T1), DK2015651 (T3), EP2015651 (A2), more

Abstract of TW200742709 (A)

The invention provides systems and methods of joining two or more pallet sections, including a top deck and a bottom deck. The top deck may include a portion of pallet blocks that project downwardly and include outer sleeves and bosses or posts. The bottom deck may include a portion of pallet blocks that project upwardly and include inner sleeves, post receiving cavities and radial ribs, wherein the post receiving cavity is coupled to the inner sleeves by the

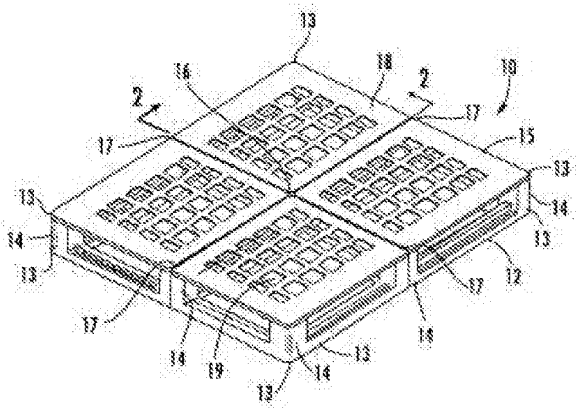

Milwaukee Electric Tool, Keter Home and Garden Products – Ex. 2003 - Page 1127
Klein Tools v. Milwaukee Electric Tool, Keter Home and Garden Products
IPR2024-01400

plurality of radial ribs. The post may be inserted into the post receiving cavity to protrude through the post receiving cavity and to extend beyond a plane that is defined by bottom portions of radial ribs. During insertion of the post into the post receiving cavity, the outer sleeve is fitted over the inner sleeve. The top deck and the bottom deck may be joined together using a heat staking assembly process that includes applying heat and pressure to reform a tip portion of the post to mechanically lock the top deck and the bottom deck through the pallet blocks.

I324578

發明專利說明書

公告本

（本說明書格式、順序及粗體字，請勿任意更動，※記號部分請勿填寫）

※ 申請案號：96113014

※ 申請日期：96.4.13　　※IPC 分類：B65D 19/24 (2006.01)

一、發明名稱：（中文/英文）

耐久托板及托板塊

DURABLE PALLET AND PALLET BLOCK

二、申請人：（共 1 人）

姓名或名稱：（中文/英文）

奇普科技私人有限公司 / CHEP TECHNOLOGY PTY LIMITED

代表人：（中文/英文）

1. 凡德蘭德維瑞斯　克萊斯 A. / VAN DER LAANDEVRIES, CRAIS ANDREW
2. 沙拉德　羅伯特 N. / SERRARD, ROBERT NIES

住居所或營業所地址：（中文/英文）

澳洲新南威爾斯雪梨・馬奎里廣場 1・閘門 40 樓

Level 40 Gateway, 1 Macquarie Place, Sydney, New South Wales 2000, Australia

國　籍：（中文/英文）

澳洲 / AUSTRALIA

三、發明人：（共 2 人）

姓　名：（中文/英文）

1. 奈杜　維斯努 / NAIDU, VISHNU
2. 貝倫森　詹姆斯 / BEERENSSON, JAMES

國　籍：（中文/英文）

1. 美國 / U.S.A.
2. 美國 / U.S.A.

Milwaukee Electric Tool, Keter Home and Garden Products – Ex. 2003 - Page 1129
Klein Tools v. Milwaukee Electric Tool, Keter Home and Garden Products
IPR2024-01400

四、聲明事項：

☐ 主張專利法第二十二條第二項☐第一款或☐第二款規定之事實，其事實發生日期為：。

☑ 申請前已向下列國家（地區）申請專利：

【格式請依：受理國家（地區）、申請日、申請案號　順序註記】

☑ 有主張專利法第二十七條第一項國際優先權：

1. 美國、　　2006/05/08、　11/382,148

☐ 無主張專利法第二十七條第一項國際優先權：

☐ 主張專利法第二十九條第一項國內優先權：

【格式請依：申請日、申請案號　順序註記】

☐ 主張專利法第三十條生物材料：

☐ 須寄存生物材料者：

國內生物材料 【格式請依：寄存機構、日期、號碼　順序註記】

國外生物材料 【格式請依：寄存國家、機構、日期、號碼　順序註記】

☐ 不須寄存生物材料者：

所屬技術領域中具有通常知識者易於獲得時，不須寄存。

Milwaukee Electric Tool, Keter Home and Garden Products – Ex. 2003 - Page 1130
Klein Tools v. Milwaukee Electric Tool, Keter Home and Garden Products
IPR2024-01400

九、發明說明：

【發明所屬之技術領域】

發明領域

本發明係有關於用以支持貨物與其他物件之塑膠托板，詳而言之，本發明係有關於可收納一昇降裝置之多件式塑膠托板。

【先前技術】

發明背景

托板係由木頭、塑膠及/或金屬製成之平坦運送結構，且托板可用以穩定地支持多種放置在該托板頂面上之各種貨物。托板使貨物可利用叉式昇降機或其他起重機裝置等昇降裝置來儲存及/或運送。

木質與金屬托板會有許多缺點。例如，木質托板的缺點包括裂開、因不黴菌同水份含量而產生重量變動、及/或由於由水份所產生之黴菌及/或真菌而造成不衛生等問題。金屬托板的缺點包括高製造成本、腐蝕及/或彎曲等問題。雖然塑膠托板具有數個優於木質與金屬托板的好處，但是仍必須增加塑膠托板之耐久性與強度。

【發明內容】

發明概要

本發明之各種方面可克服現有系統之以上與其他缺點之至少某些缺點，且依據本發明之一實施例，一托板包括結合在一起之兩或兩個以上之區段。該托板可包括多數用以結合該托板之底層板及頂層板的托板塊，例如，該托板

Milwaukee Electric Tool, Keter Home and Garden Products – Ex. 2003 - Page 1131
Klein Tools v. Milwaukee Electric Tool, Keter Home and Garden Products
IPR2024-01400

可包括多數位在角隅處、在沿著該托板周緣在該等角隅之間的位置處、在該托板之中心處、或在其他位置處之托板塊。該等托板塊可包括圓化角隅，而圓化角隅的優點包括減少在與昇降裝置叉桿、叉齒、或其他物體撞擊時的破壞；較佳之外觀及/或其他優點。依據本發明之實施例，該托板塊可配置成使該托板具有四向對稱性。

依據本發明之另一實施例，該頂層板可包括向下突出之托板塊，且在該頂層板上之托板塊可包括多數外套筒與凸塊或柱等元件。

依據本發明之實施例，該底層板可包括向上突出之托板塊，且在該底層板上之托板塊可包括多數內套筒、多數柱收納孔及多數徑向肋等元件。依據本發明之另一實施例，該柱收納孔可利用前述多數徑向肋結合該等內套筒，且該等徑向肋具有許多包括增加托板塊之強度與耐久性等優點。

依據本發明之實施例，該柱可插入該柱收納孔且可突穿過靠近該底層板之該柱收納孔一端。例如，該柱可延伸超出一由位在靠近該底層板之該柱收納孔遠端處之徑向肋底部所界定的平面。依據一實施例，在將該柱插入該柱收納孔時，該外套筒嵌套在該內套筒上。依據本發明之另一實施例，該組合完成後之托板塊包括一由該外套筒與該內套筒所形成之雙層塊壁厚度。依據本發明之另一實施例，該等徑向肋係構成為可結合該內套筒與該柱，藉此利用提供撞擊傳遞等優點來增加該組合完成後之托板塊的強度。

Milwaukee Electric Tool, Keter Home and Garden Products – Ex. 2003 - Page 1132
Klein Tools v. Milwaukee Electric Tool, Keter Home and Garden Products
IPR2024-01400

依據本發明之另一實施例，該頂層板與該底層板可利用一熱熔(heat staking)組合法結合在一起，而該熱熔組合法包括利用熱與壓力來改造該柱之尖端部。依據本發明之實施例，在該柱插入該柱收納孔並突穿過該柱收納孔且延伸超出一由靠近該底層板之該等徑向肋底部所界定之平面後，對該柱加熱與加壓以產生一透過該等托板塊將該頂層板與該底層板機械式鎖合在一起之變形柱。依據本發明之另一實施例，可以利用其他固結機構機械式地固結該柱與該柱收納孔。

本發明具有多數優於且避免習知系統之許多缺點的好處，且本發明之前述與其他目的、特徵與優點可由實施例之詳細說明及添附圖式了解。在此亦應了解的是前述一般性說明與以下詳細說明是舉例而不會限制本發明之範圍。本發明之許多其他目的、特徵與優點可在配合添附圖式閱讀以下詳細說明後了解，且以下係添附圖式之簡單說明。

圖式簡單說明

在此添附之圖式係欲顯示本發明之實施例，且圖式不是要將本發明限制於在此所示與所述之實施例。

第1圖顯示一本發明實施例組合完成後之托板的俯視立體圖；

第2圖顯示一本發明實施例之第1圖頂層板的仰視立體圖；

第3圖顯示一本發明實施例頂層板之托板塊一部份的分解圖；

Milwaukee Electric Tool, Keter Home and Garden Products – Ex. 2003 - Page 1133
Klein Tools v. Milwaukee Electric Tool, Keter Home and Garden Products
IPR2024-01400

第4圖顯示一本發明實施例之第1圖底層板的仰視立體圖；

第5圖顯示一本發明實施例底層板之托板塊一部份的分解圖；

第6圖顯示一本發明實施例組合完成後之托板的仰視立體圖；

第7圖顯示本發明實施例之組合完成托板塊的仰視立體分解圖；

第8圖顯示一本發明實施例之第2圖頂層板的側視圖；

第9圖顯示本發明實施例之具有變形柱之組合完成托板塊的仰視立體分解圖；

第10圖顯示本發明實施例之補強桿；及

第11圖顯示本發明實施例之包括補強桿之組合完成托板的仰視立體圖。

【實施方式】

發明之詳細說明

第1圖顯示本發明實施例之托板10，且該托板10具有兩結合在一起之區段。依據實施例，托板10可包括一下段或底層板12、及一上端或頂層板15，且該底層板12與該頂層板15係分別模製而成者。頂層板15可包括一具有多數孔19之大致平坦的平面18，其中孔19具有減少頂層板15之表面積、包括放置在頂層板15上之材料的透氣性、減少頂層板15之重量及/或其他優點。依據本發明之實施例，平面18之100mm外周緣可不包含任何孔。底層板12可包括一實質配

Milwaukee Electric Tool, Keter Home and Garden Products – Ex. 2003 - Page 1134
Klein Tools v. Milwaukee Electric Tool, Keter Home and Garden Products
IPR2024-01400

合頂層板15周緣形狀的周緣形狀，且底層板12可包括具有十字形構件之矩形周緣形狀，並且該等十字形構件在該矩形周緣各側之中心部份交叉且位在角隅13之間的中途。

依據本發明之實施例，底層板12與頂層板15可以由包括高密度聚乙烯(HDPE)、聚丙烯(PP)等熱塑性材料或其他聚合物材料模製而成。發明所屬技術領域中具有通常知識者在此應可了解該等聚合物材料可以是填充或未填充者及/或可包括顆粒狀或纖維、天然或合成材料等，例如，未填充HDPE可用以改善耐衝擊強度、具有強化物(例如，長玻璃纖維)之PP可用以改善結構性質、且具有不規則共聚合物之未填充PP可用以改善補強性質。依據本發明之另一實施例，該底層板12與頂層板15之全部或部份可由包括木頭、金屬等其他材料製成。

依據本發明實施例，底層板12與頂層板15可以由不同熱塑性材料或聚合物材料模製而成。例如，底層板12可由第一種熱塑性材料或聚合物材料模製而成，而頂層板15可由第二種熱塑性材料或聚合物材料模製而成。依據本發明之另一實施例，底層板12可由木木頭、金屬或其他材料製成，而頂層板15可由第二種熱塑性材料或聚合物材料模製而成。

如第1圖之俯視立體圖所示，托板10可以設計成包括，例如，一實質正方形周緣。依據本發明之實施例，底層板12與頂層板15可沿托板10之周緣包括圓化角隅13及/或圓化邊緣，而圓化角隅13及/或圓化邊緣具有包括減少與物體

Milwaukee Electric Tool, Keter Home and Garden Products – Ex. 2003 - Page 1135
Klein Tools v. Milwaukee Electric Tool, Keter Home and Garden Products
IPR2024-01400

撞擊時之破壞、改善外觀等數個優點。

依據本發明之實施例，托板10可包括多數設置可結合底層板12與頂層板15之托板塊14。例如，托板10可包括九個位在角隅13處、在沿該托板10周緣且在角隅13間之位置17處、及在托板10之中心16處的托板塊14。發明所屬技術領域中具有通常知識者應可了解在此亦可使用較多數目或較少數目之托板塊14。托板塊14可包括圓化角隅，以提供包括減少與昇降裝置叉齒或其他物體撞擊時之破壞、改善外觀等數個優點。依據本發明之實施例，托板塊14係構成為可使托板10具有四向對稱性。第2-10圖利用此四向對稱性而僅顯示沿第1圖之部份2-2所截取之四分之一托板10。

雖然在此說明且在添附圖式中顯示了特定之實施例，但是本發明包含比所述與所示之特定標的物更大的範圍。發明所屬技術領域中具有通常知識者應可了解在此所述之實施例只是提供本發明廣大範圍之數個例子而已，本發明之範圍不限於在此所述之實施例。

第2圖顯示本發明實施例之頂層板15的仰視立體圖。依據本發明之實施例，一連串肋21、22可形成在頂層板15之底側，其中肋21、22可分別配置成平行(21)與垂直(22)於頂層板15之對應側。依據本發明之另一實施例，可設置多數相對於頂層板15之對應側形成其他角度的肋。發明所屬技術領域中具有通常知識者應可了解肋21、22共同使平面18具有更大的強度。依據本發明之實施例，托板塊14可在角隅13處、在角隅13間之位置27處、及在頂層板15之中心26

Milwaukee Electric Tool, Keter Home and Garden Products – Ex. 2003 - Page 1136
Klein Tools v. Milwaukee Electric Tool, Keter Home and Garden Products
IPR2024-01400

處由頂層板15向下突出，而發明所屬技術領域中具有通常知識者應可輕易了解托板塊14可位於頂層板15上之其他位置處。依據本發明之實施例，柱23可以呈錐形且具有位在靠近頂層板15處之較寬部份。依據本發明之另一實施例，柱23可在其整個長度上具有一均一直徑，但亦可使用其他構形。依據本發明之又一實施例，柱23之周緣可以呈包括正方形、三角形、橢圓形、十字形等任何形狀。依據本發明之再一實施例，柱23可呈中空狀、部份中空狀或填滿狀。第3圖顯示一對應於頂層板15之托板塊14一部份的分解圖。依據本發明之實施例，頂層板15之組件包括外套筒24、肋21、22、柱23等且可由未填充HDPE製成，以提供較佳之耐衝擊性等優點。

第4圖顯示本發明實施例之底層板12之俯視立體圖。依據本發明之實施例，一連串肋41可形成在底層板12之上側，其中肋41可配置成平行及/或垂直於底層板12之對應側。依據本發明之另一實施例，可設置多數相對於底層板12之對應側形成其他角度的肋。發明所屬技術領域中具有通常知識者應可了解肋41共同使平面42具有更大的強度，同時亦使底層板12具有重量較輕之優點。依據本發明之實施例，托板塊14可在角隅13處、在角隅13間之位置47處、及在底層板12之中心46處由底層板12向上突出，而發明所屬技術領域中具有通常知識者應可輕易了解托板塊14可位於底層板12上之其他位置處。托板塊14可包括多數內套筒44、多數柱收納孔43及多數徑向肋45等組件。依據本發明

Milwaukee Electric Tool, Keter Home and Garden Products – Ex. 2003 - Page 1137
Klein Tools v. Milwaukee Electric Tool, Keter Home and Garden Products
IPR2024-01400

之實施例，柱收納孔43可以呈錐形且具有位在靠近底層板12處之窄部。依據本發明之另一實施例，柱收納孔43可在其整個長度上具有一均一直徑，但亦可使用其他構形。依據本發明之又一實施例，柱收納孔43之周緣可以呈包括正方形、三角形、橢圓形、十字形等任何形狀。依據本發明之再一實施例，柱收納孔43可利用多數徑向肋45結合內套筒44，且該等徑向肋45沿柱收納孔43之長向延伸。依據本發明之另一實施例，徑向肋45可朝平行於該平面42之方向延伸，而發明所屬技術領域中具有通常知識者應可了解其他徑向肋構形且該等徑向肋構形亦包含在本發明之範圍內。又，徑向肋45具有包括增加托板塊14之強度與耐久性等優點。第5圖顯示一對應於底層板12之托板塊14一部份的分解圖，且依據本發明之實施例，該托板塊14包括多數柱收納孔43、內套筒44及多數徑向肋45。依據本發明之另一實施例，底層板12之組件包括多數內套筒44、多數徑向肋45、多數肋41、多數柱收納孔43等且可由具有長玻璃纖維之PP、未填充PP不規共聚合物或其他材料製成。

第6圖顯示本發明實施例之組合完成托板塊14的仰視立體圖。依據本發明之實施例，柱23可插入該柱收納孔43而突穿過該柱收納孔43且延伸超出一由靠近底層板12之徑向肋45底部所界定之平面。在將柱23插入柱收納孔43時，外套筒24嵌套在內套筒44上。第7圖顯示組合完成托板塊14之仰視分解圖。依據本發明之實施例，組合完成之托板塊14包括一兩層塊壁厚度，以增加組合完成托板塊14之強

Milwaukee Electric Tool, Keter Home and Garden Products – Ex. 2003 - Page 1138
Klein Tools v. Milwaukee Electric Tool, Keter Home and Garden Products
IPR2024-01400

度，而該兩層塊壁厚度係利用將外套筒24嵌套在內套筒44上而形成者。依據本發明之另一實施例，徑向肋45係構成為可提供衝擊傳遞等優點。

依據本發明之另一實施例，頂層板15與底層板12可利用一熱熔組合法結合在一起，且該熱熔組合法包括加熱與加壓以改造該柱23之尖端部。該熱熔組合法通常包括對一熱塑性元件提供足夠之熱，以重新設定該熱塑性元件之記憶，但不會使該熱塑性元件熔化。第8圖顯示具有突出外套筒24之柱23之頂層板15的側視圖。依據本發明之實施例，柱23之高度可設定成至少為柱23之最大直徑的1.5倍。依據第9圖所示之本發明實施例，在柱23插入柱收納孔43而突穿過該柱收納孔43並延伸超出一由徑向肋45底部所界定之平面後，可加熱與加壓該柱23以產生透過該等托板塊將該頂層板15與該底層板12機械式鎖合在一起之變形柱91。依據本發明之另一實施例，可使用一擠壓銷(compression probe)或其他變形工具來產生變形柱91。

依據本發明之又一實施例，柱23與柱收納孔43可以利用一扣合機構固結在一起。依據本發明之實施例，柱23之尖端部可包括一滑過靠近底層板12之該柱收納孔43下端的凸片。當該凸片脫離柱收納孔43之下端時，該凸片可以向外彎曲而將該頂層板15與該底層板12機械式地鎖合在一起。依據本發明之另一實施例，該凸片可位在柱23之任何部份，以結合柱收納孔43或其他組件。依據本發明之又一實施例，該凸片可位在該柱收納孔43上，以結合柱23或其

Milwaukee Electric Tool, Keter Home and Garden Products – Ex. 2003 - Page 1139
Klein Tools v. Milwaukee Electric Tool, Keter Home and Garden Products
IPR2024-01400

他組件，而發明所屬技術領域中具有通常知識者應可了解其他固結機構且該等固結機構亦包含在本發明之範圍內。

第10圖顯示本發明實施例之補強桿1000，且第11圖顯示本發明實施例之組合完成托板10的仰視立體圖，而該托板10包括多數插入底層板12中之補強桿1000。在第11圖中，頂層板15係以比底層板12更淡之陰影線來顯示。依據本發明之實施例，一連串肋1101、1102可形成在底層板12之底側，其中肋1101、1102可分別配置成平行(1101)與垂直(1102)於底層板12之對應側。依據本發明之另一實施例，可設置多數相對於底層板12之對應側形成其他角度的肋。發明所屬技術領域中具有通常知識者應可了解肋1101、1102共同使平面42具有更大的強度。依據本發明之另一實施例，肋1101、1102係構成為可提供用以收納補強桿1000於其中之凹孔。

雖然已揭露了本發明之較佳實施例，但發明所屬技術領域中具有通常知識者應可了解在不偏離本發明精神與範疇的情形下，可以作成可達成本發明某些優點之各種變化與修改例。例如，該系統可以該底層板之托板塊部份取代該頂層板之托板塊部份，且反之亦然。又，發明所屬技術領域中具有通常知識者亦應了解可以執行相同功能之其他元件適當地取代。因此，本發明之範圍僅由以下申請專利範圍來決定。

【圖式簡單說明】

第1圖顯示一本發明實施例組合完成後之托板的俯視

Milwaukee Electric Tool, Keter Home and Garden Products – Ex. 2003 - Page 1140
Klein Tools v. Milwaukee Electric Tool, Keter Home and Garden Products
IPR2024-01400

立體圖；

第2圖顯示一本發明實施例之第1圖頂層板的仰視立體圖；

第3圖顯示一本發明實施例頂層板之托板塊一部份的分解圖；

第4圖顯示一本發明實施例之第1圖底層板的仰視立體圖；

第5圖顯示一本發明實施例底層板之托板塊一部份的分解圖；

第6圖顯示一本發明實施例組合完成後之托板的仰視立體圖；

第7圖顯示本發明實施例之組合完成托板塊的仰視立體分解圖；

第8圖顯示一本發明實施例之第2圖頂層板的側視圖；

第9圖顯示本發明實施例之具有變形柱之組合完成托板塊的仰視立體分解圖；

第10圖顯示本發明實施例之補強桿；及

第11圖顯示本發明實施例之包括補強桿之組合完成托板的仰視立體圖。

Milwaukee Electric Tool, Keter Home and Garden Products – Ex. 2003 - Page 1141
Klein Tools v. Milwaukee Electric Tool, Keter Home and Garden Products
IPR2024-01400

【主要元件符號說明】

10...托板
12...底層板
13...角隅
14...托板塊
15...頂層板
16...中心
17...位置
18...平面
19...孔
21,22...肋
23...柱
24...外套筒
26...中心
27...位置
41...肋
42...平面
43...柱收納孔
44...內套筒
45...徑向肋
46...中心
47...位置
91...變形柱
1000...補強桿
1101,1102...肋

Milwaukee Electric Tool, Keter Home and Garden Products – Ex. 2003 - Page 1142
Klein Tools v. Milwaukee Electric Tool, Keter Home and Garden Products
IPR2024-01400

五、中文發明摘要：

本發明提供結合兩或兩個以上包括一頂層板與一底層板之托板區段，且該頂層板可包括向下突出並且包括多數外套筒及凸塊或柱之托板塊的一部份。該底層板可包括向上突出且包括多數內套筒、柱收納孔及徑向肋之托板塊，其中該柱收納孔利用前述多數徑向肋而與該等內套筒結合。該柱可插入該柱收納孔且突穿該柱收納孔，並且延伸超出一由徑向肋之底部所界定之平面。在將該柱插入該柱收納孔時，該外套筒嵌套在該內套筒上。該頂層板與該底層板可以利用一熱熔組合法結合在一起，且該熱熔組合法包括加熱與加壓以改造該柱尖端部，以透過該等托板塊將該頂層板與該底層板機械式地鎖合在一起。

六、英文發明摘要：

The invention provides systems and methods of joining two or more pallet sections, including a top deck and a bottom deck. The top deck may include a portion of pallet blocks that project downwardly and include outer sleeves and bosses or posts. The bottom deck may include a portion of pallet blocks that project upwardly and include inner sleeves, post receiving cavities and radial ribs, wherein the post receiving cavity is coupled to the inner sleeves by the plurality of radial ribs. The post may be inserted into the post receiving cavity to protrude through the post receiving cavity and to extend beyond a plane that is defined by bottom portions of radial ribs. During insertion of the post into the post receiving cavity, the outer sleeve is fitted over the inner sleeve. The top deck and the bottom deck may be joined together using a heat staking assembly process that includes applying heat and pressure to reform a tip portion of the post to mechanically lock the top deck and the bottom deck through the pallet blocks.

Milwaukee Electric Tool, Keter Home and Garden Products – Ex. 2003 - Page 1143
Klein Tools v. Milwaukee Electric Tool, Keter Home and Garden Products
IPR2024-01400

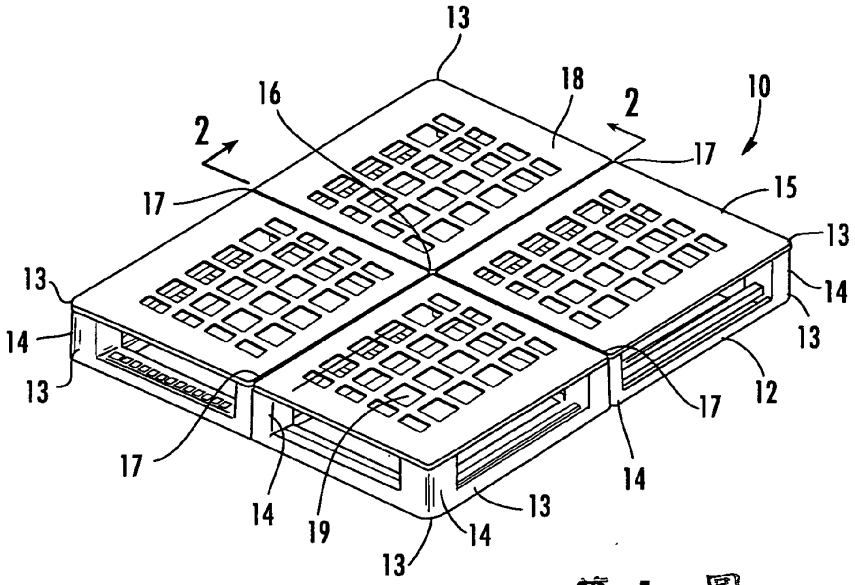
13
18
16
2
2
10
17
17
15
13
13
14
14
13
13
12
17
17
14
14
19
13
14
13

第 1 圖

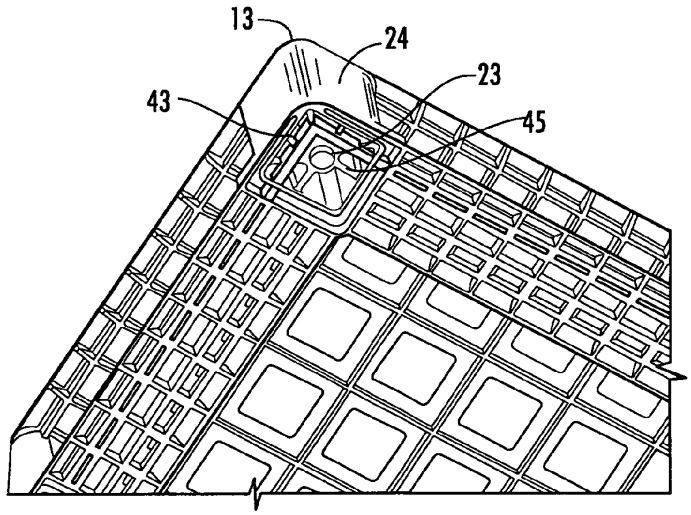
13
24
23
43
45

第 6 圖

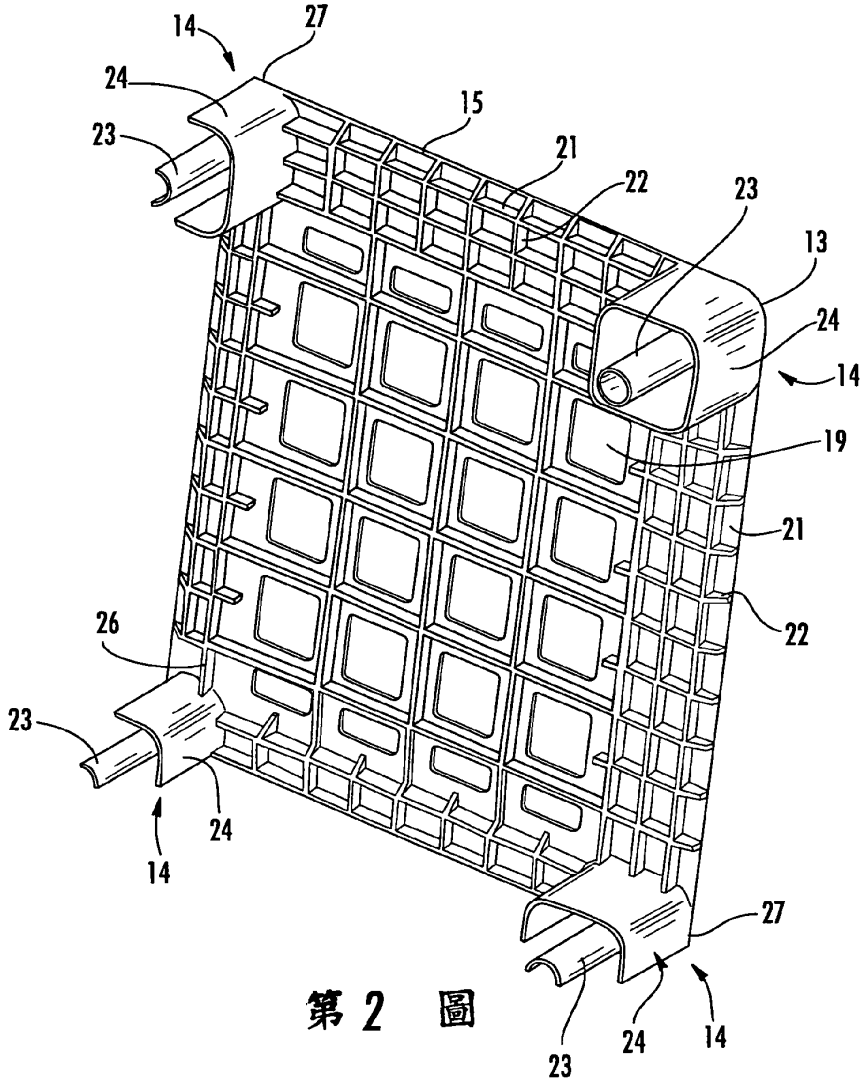

第 2 圖

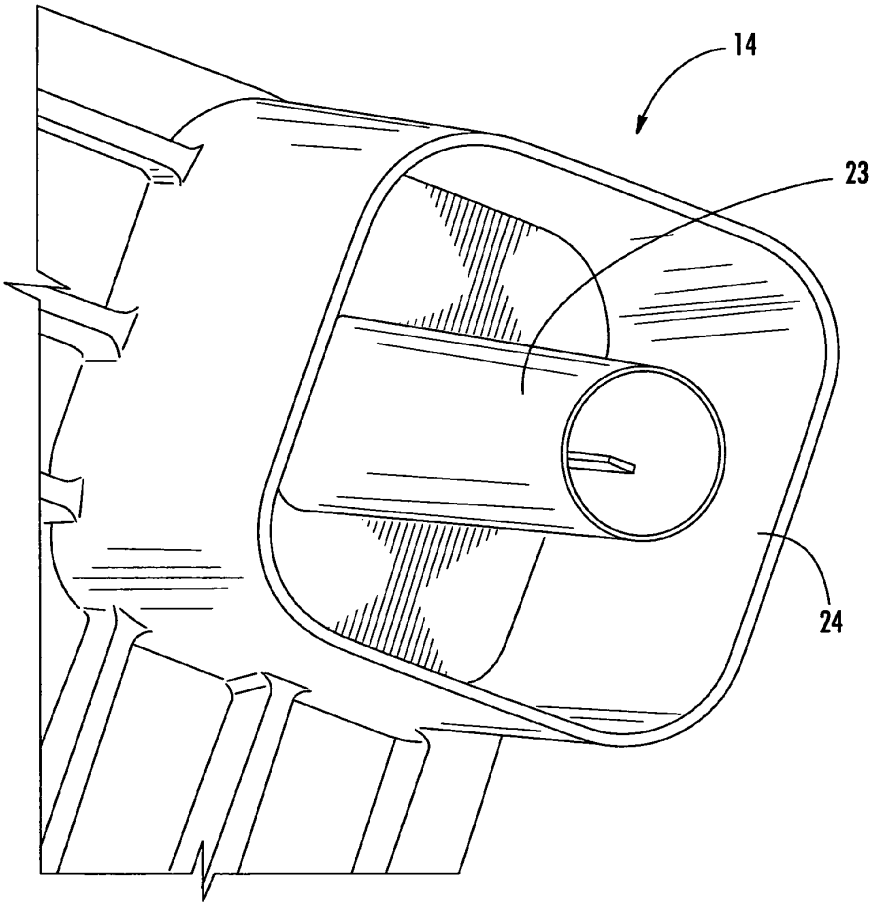

第 3 圖

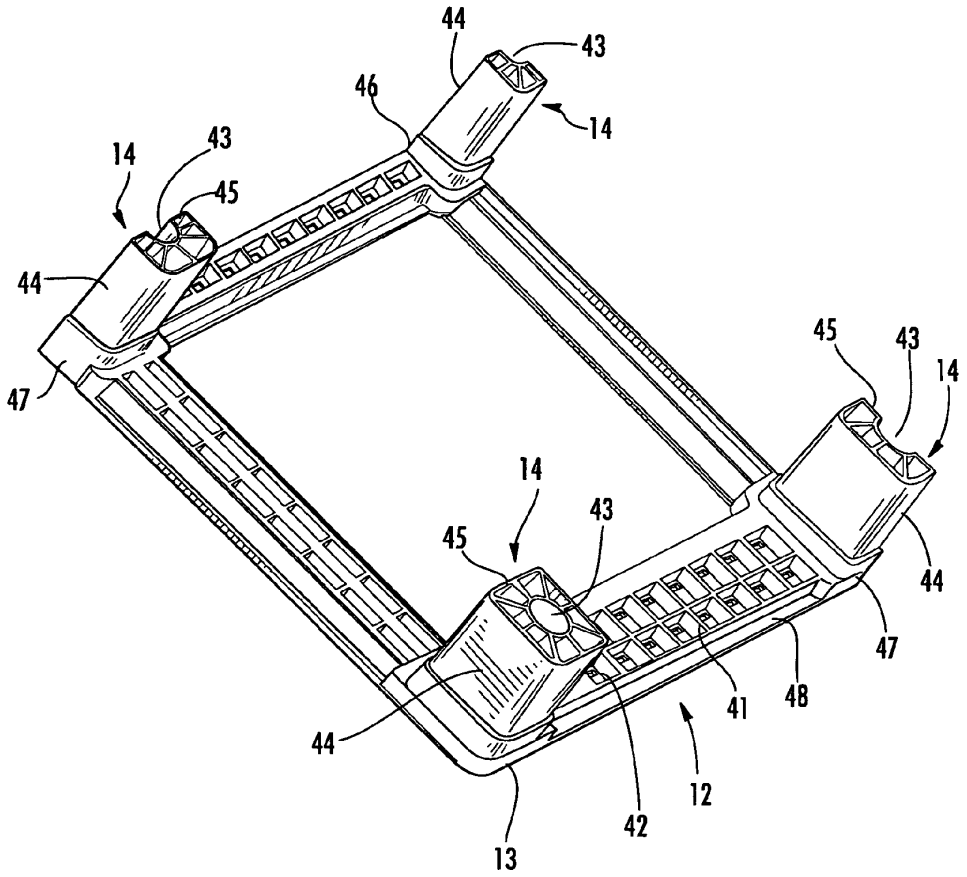

第 4 圖

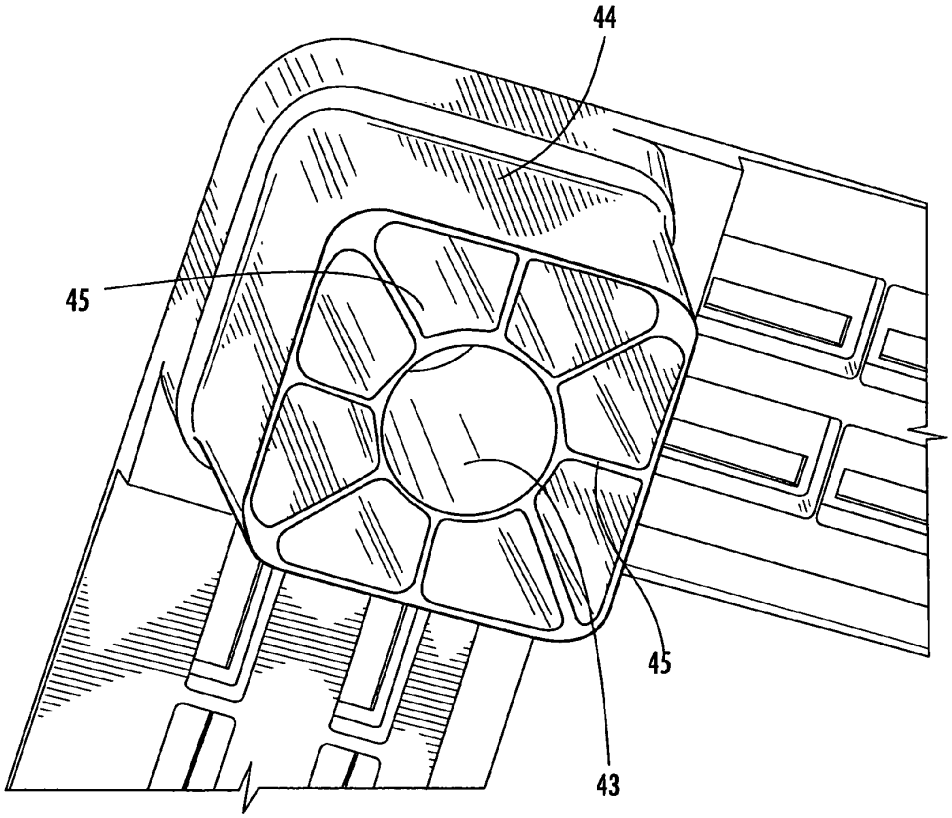

第 5 圖

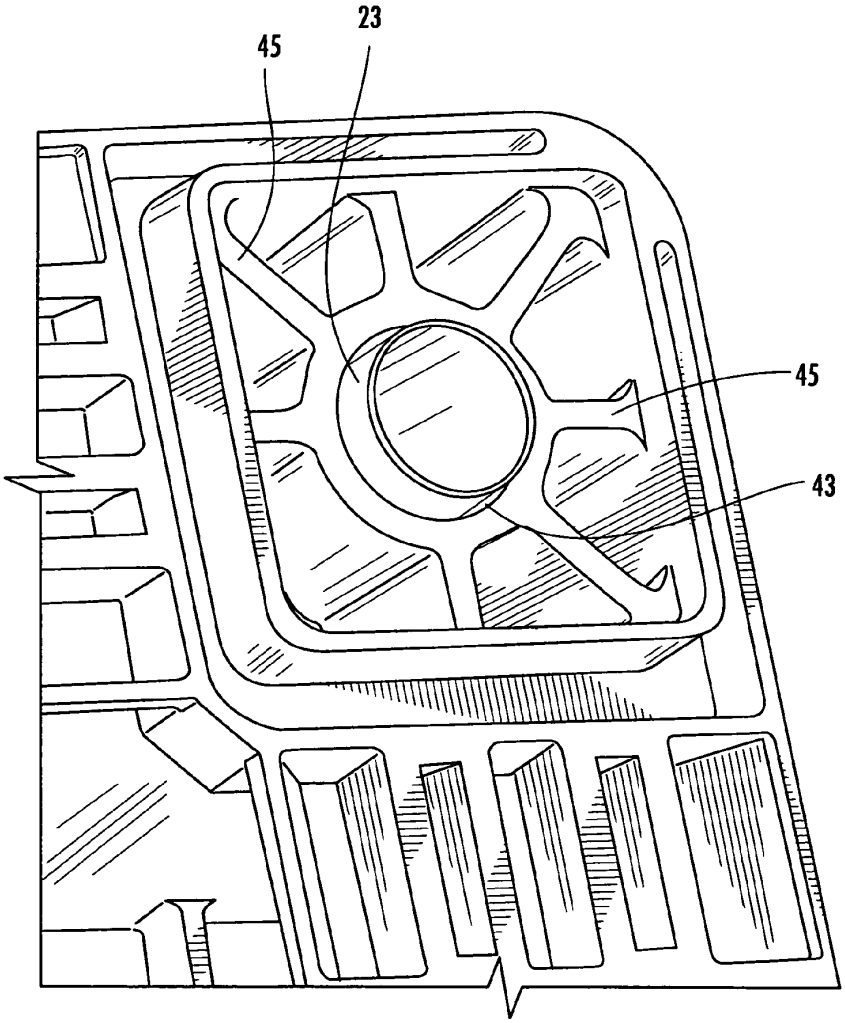

第 7 圖

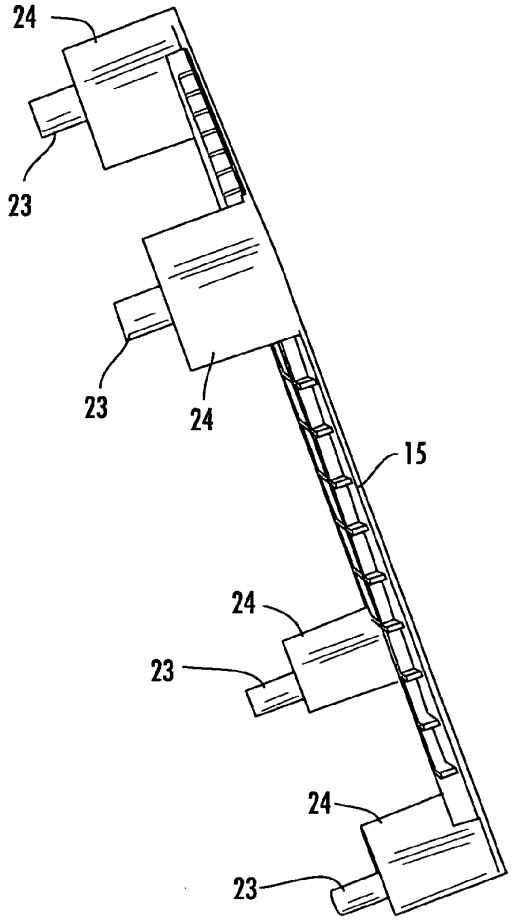

第 8 圖

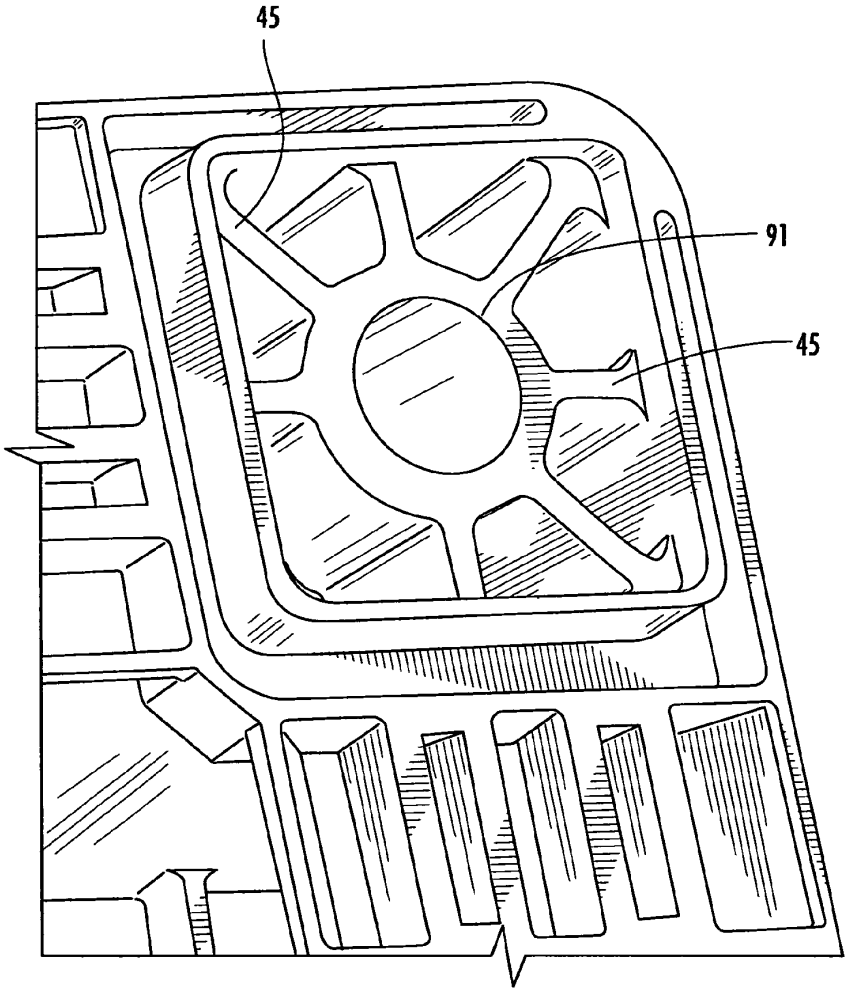

第 9 圖

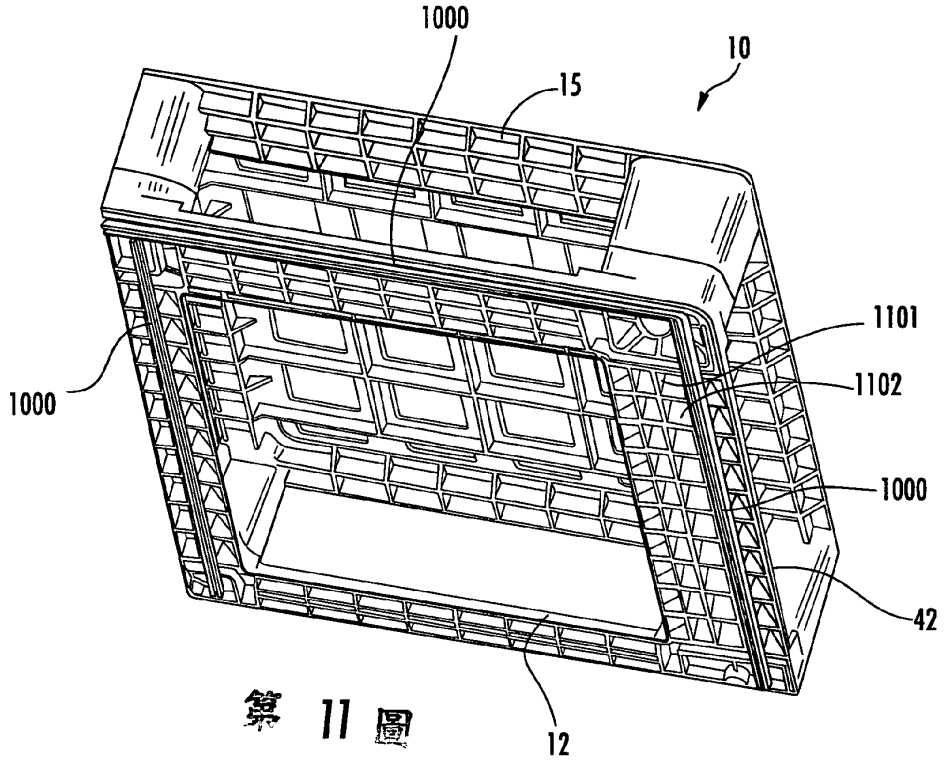

第 11 圖

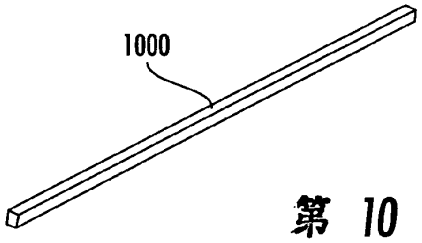

第 10 圖

七、指定代表圖：

(一)本案指定代表圖為：第（ 1 ）圖。

(二)本代表圖之元件符號簡單說明：

10...托板
12...底層板
13...角隅
14...托板塊
15...頂層板
16...中心
17...位置
18...平面
19...孔

八、本案若有化學式時，請揭示最能顯示發明特徵的化學式：

Milwaukee Electric Tool, Keter Home and Garden Products – Ex. 2003 - Page 1153
Klein Tools v. Milwaukee Electric Tool, Keter Home and Garden Products
IPR2024-01400

十、申請專利範圍：

99年1月7日 修正本

1. 一種托板，包含：

一上層板；

多數第一結合構件，係由該上層板向下突出，各第一結合構件與該上層板一體地模製且包括一外套筒及一位於其中之柱，且該柱突出超過該外套筒；

一下層板；

多數第二結合構件，係由該上層板向下突出，各第二結合構件與該下層板一體地模製且包括一內套筒及一位於其中之柱收納孔；且

該等多數第一與第二結合構件連結在一起以界定多數結合該等上與下層板之托板塊，且該等第二結合構件之各內套筒與柱收納孔收納該等第一結合構件之一對應柱與外套筒，並且各柱收納孔收納突出超過該外套筒之該柱。

2. 如申請專利範圍第1項之托板，其中該上層板包括一平面，該平面具有多數延伸穿過其中之孔。

3. 如申請專利範圍第1項之托板，其中該上層板包括一第一周緣形狀且該下層板包括一實質上與該第一周緣形狀配合之周緣形狀。

4. 如申請專利範圍第1項之托板，其中該上層板與該下層板係由熱塑性材料及聚合物材料之至少一者分別模製而成者。

5. 如申請專利範圍第1項之托板，其中該上層板與該下層

Milwaukee Electric Tool, Keter Home and Garden Products – Ex. 2003 - Page 1154
Klein Tools v. Milwaukee Electric Tool, Keter Home and Garden Products
IPR2024-01400

板包含不同材料。

6. 如申請專利範圍第1項之托板，其中該上層板與該下層板包括圓化角隅與圓化邊緣之至少一者。

7. 如申請專利範圍第1項之托板，其中前述多數第一結合構件與前述多數第二結合構件係定位在對應上層板與下層板上之配合位置處，其中該等位置包括對應上層板與下層板之角隅、對應上層板與下層板之周緣、及對應上層板與下層板之中心。

8. 如申請專利範圍第7項之托板，其中該上層板包括九個前述第一結合構件且該下層板包括九個前述第二結合構件。

9. 如申請專利範圍第1項之托板，其中前述多數第一結合構件之各柱包括一具有正方形、三角形、橢圓形、及十字形之至少一者之周緣形狀。

10. 如申請專利範圍第9項之托板，其中前述多數第二結合構件之各柱收納孔包括一與前述多數第一結合構件之各對應柱相同之周緣形狀。

11. 如申請專利範圍第1項之托板，其中各外套筒之周緣尺寸大於各對應內套筒之周緣尺寸。

12. 如申請專利範圍第1項之托板，其中各外與內套筒具有圓化角隅。

13. 如申請專利範圍第1項之托板，其中當完全插入時，各柱之尖端部延伸超出各對應柱收納孔之一外暴露底端部。

Milwaukee Electric Tool, Keter Home and Garden Products – Ex. 2003 - Page 1155
Klein Tools v. Milwaukee Electric Tool, Keter Home and Garden Products
IPR2024-01400

14. 如申請專利範圍第1項之托板，其中各柱呈錐形且具有一位在靠近上層板處之較寬部份。

15. 如申請專利範圍第1項之托板，更包含一或多個插入該下層板與該上層板之至少一者的補強桿。

16. 一種托板，包含：

一上層板；

多數第一結合構件，係由該上層板向下突出，各第一結合構件與該上層板一體地模製且包括一外套筒及一位於其中之柱，且該柱突出超過該外套筒；

一下層板；

多數第二結合構件，係由該上層板向下突出，各第二結合構件與該下層板一體地模製且包括一內套筒及一位於其中之柱收納孔，且多數徑向肋延伸在該內套筒及該柱收納孔之間；且

該等多數第一與第二結合構件連結在一起以界定多數結合該等上與下層板之托板塊，且該等第二結合構件之各內套筒與柱收納孔收納該等第一結合構件之一對應柱與外套筒，並且各柱收納孔收納突出超過該外套筒之該柱。

17. 如申請專利範圍第16項之托板，其中該上層板包括一平面，該平面具有多數延伸穿過其中之孔。

18. 如申請專利範圍第16項之托板，其中該上層板包括一第一周緣形狀且該下層板包括一實質上與該第一周緣形狀配合之周緣形狀。

Milwaukee Electric Tool, Keter Home and Garden Products – Ex. 2003 - Page 1156
Klein Tools v. Milwaukee Electric Tool, Keter Home and Garden Products
IPR2024-01400

19. 如申請專利範圍第16項之托板，其中該上層板與該下層板係由熱塑性材料及聚合物材料之至少一者分別模製而成者。

20. 如申請專利範圍第16項之托板，其中該上層板與該下層板包含不同材料。

21. 如申請專利範圍第16項之托板，其中該上層板與該下層板包括圓化角隅與圓化邊緣之至少一者。

22. 如申請專利範圍第16項之托板，其中前述多數第一結合構件與前述多數第二結合構件係定位在對應上層板與下層板上之配合位置處，其中該等位置包括對應上層板與下層板之角隅、對應上層板與下層板之周緣、及對應上層板與下層板之中心。

23. 如申請專利範圍第22項之托板，其中該上層板包括九個前述第一結合構件且該下層板包括九個前述第二結合構件。

24. 如申請專利範圍第16項之托板，其中前述多數第一結合構件之各柱包括一具有正方形、三角形、橢圓形、及十字形之至少一者之周緣形狀。

25. 如申請專利範圍第24項之托板，其中前述多數第二結合構件之各柱收納孔包括一與前述多數第一結合構件之各對應柱相同之周緣形狀。

26. 如申請專利範圍第16項之托板，其中各外套筒之周緣尺寸大於各對應內套筒之周緣尺寸。

27. 如申請專利範圍第16項之托板，其中一各外與內套筒具

Milwaukee Electric Tool, Keter Home and Garden Products – Ex. 2003 - Page 1157
Klein Tools v. Milwaukee Electric Tool, Keter Home and Garden Products
IPR2024-01400

有圓化角隅。

28. 如申請專利範圍第16項之托板，其中當完全插入時，各柱之尖端部延伸超出各對應柱收納孔之一外暴露底端部。

29. 如申請專利範圍第28項之托板，其中各柱呈錐形且具有一位在靠近上層板處之較寬部份。

30. 如申請專利範圍第16項之托板，更包含一或多個插入該下層板與該上層板之至少一者的補強桿。

31. 如申請專利範圍第16項之托板，其中該等徑向肋沿著該內套筒之一長度且沿著該柱收納孔之一長度延伸。

32. 如申請專利範圍第31項之托板，其中該等徑向肋實質上垂直於一由該上層板之平面或該下層板之平面所界定之平面。

33. 一種製造一托板之方法，包含：

提供一上層板及多數由該上層板向下突出之第一結合構件，各第一結合構件與該上層板一體地模製且包括一外套筒及一位於其中之柱，且該柱突出超過該外套筒；

提供一下層板及多數由該下層板向上突出之第二結合構件，各第二結合構件與該下層板一體地模製且包括一內套筒及一位於其中之柱收納孔；及

藉將該等多數第一與第二結合構件連結在一起以界定多數托板塊，結合該等上與下層板，且該等第二結合構件之各內套筒與柱收納孔收納該等第一結合構件

Milwaukee Electric Tool, Keter Home and Garden Products – Ex. 2003 - Page 1158
Klein Tools v. Milwaukee Electric Tool, Keter Home and Garden Products
IPR2024-01400

之一對應柱與外套筒，並且各柱收納孔收納突出超過該外套筒之該柱。

Milwaukee Electric Tool, Keter Home and Garden Products – Ex. 2003 - Page 1159
Klein Tools v. Milwaukee Electric Tool, Keter Home and Garden Products
IPR2024-01400

Electronic Acknowledgement Receipt

EFS ID:	39022250
Application Number:	16752441
International Application Number:	
Confirmation Number:	9540
Title of Invention:	Utility Assembly and Coupling Mechanism
First Named Inventor/Applicant Name:	Yaron Brunner
Customer Number:	142078
Filer:	Derek Howard Campbell/Andrea Dietzel
Filer Authorized By:	Derek Howard Campbell
Attorney Docket Number:	066749-2584
Receipt Date:	31-MAR-2020
Filing Date:	24-JAN-2020
Time Stamp:	16:40:00
Application Type:	Utility under 35 USC 111(a)

Payment information:

Submitted with Payment	no

File Listing:

Document Number	Document Description	File Name	File Size(Bytes)/ Message Digest	Multi Part /.zip	Pages (if appl.)
1	Transmittal Letter	066749-2584_Transmittal.pdf	79996 9ea02dbfaeee567069b6cc3bf713a6682576 5a4d	no	2

Warnings:

Information:					
2	Information Disclosure Statement (IDS) Form (SB08)	066749-2584_SB08.pdf	104855 bfe6b7d491c5957a41e22a2547ced4d1940d2075	no	2
Warnings:					
Information:					
This is not an USPTO supplied IDS fillable form					
3	Foreign Reference	CN302371147.pdf	248847 5122af1c59f261797c150ca3463dd6316eeefcf5	no	3
Warnings:					
Information:					
4	Foreign Reference	JPD1395115.pdf	366018 352d920d57130b35a10e05186fe6de9441b41598	no	6
Warnings:					
Information:					
5	Foreign Reference	TWI324578B.pdf	1196923 bf0641e1ddc840d99c64e339514e03834b0e92bc	no	33
Warnings:					
Information:					
			Total Files Size (in bytes):	1996639	

This Acknowledgement Receipt evidences receipt on the noted date by the USPTO of the indicated documents, characterized by the applicant, and including page counts, where applicable. It serves as evidence of receipt similar to a Post Card, as described in MPEP 503.

New Applications Under 35 U.S.C. 111
If a new application is being filed and the application includes the necessary components for a filing date (see 37 CFR 1.53(b)-(d) and MPEP 506), a Filing Receipt (37 CFR 1.54) will be issued in due course and the date shown on this Acknowledgement Receipt will establish the filing date of the application.
National Stage of an International Application under 35 U.S.C. 371
If a timely submission to enter the national stage of an international application is compliant with the conditions of 35 U.S.C. 371 and other applicable requirements a Form PCT/DO/EO/903 indicating acceptance of the application as a national stage submission under 35 U.S.C. 371 will be issued in addition to the Filing Receipt, in due course.
New International Application Filed with the USPTO as a Receiving Office
If a new international application is being filed and the international application includes the necessary components for an international filing date (see PCT Article 11 and MPEP 1810), a Notification of the International Application Number and of the International Filing Date (Form PCT/RO/105) will be issued in due course, subject to prescriptions concerning national security, and the date shown on this Acknowledgement Receipt will establish the international filing date of the application.

IN THE UNITED STATES PATENT AND TRADEMARK OFFICE

Applicant: Milwaukee Electric Tool Corporation

Title: Utility Assembly and Coupling Mechanism

Appl. No.: 16/752,441

Filing Date: January 24, 2020

Examiner: To Be Determined

Art Unit: 3633

Confirmation Number: 9540

INFORMATION DISCLOSURE STATEMENT UNDER 37 CFR §1.56

Mail Stop Amendment
Commissioner for Patents
P.O. Box 1450
Alexandria, VA 22313-1450

Submitted herewith on Form PTO/SB/08 is a listing of the documents known to Applicants in order to comply with Applicants' duty of disclosure pursuant to 37 CFR § 1.56.

A copy of each non-U.S. patent document and each non-patent document is being submitted to comply with the provisions of 37 CFR § 1.97 and §1.98.

The submission of any document herewith, which is not a statutory bar, is not intended as an admission that such document constitutes prior art against the claims of the present application or that such document is considered material to patentability as defined in 37 CFR §1.56(b). Applicants do not waive any rights to take any action which would be appropriate to antedate or otherwise remove as a competent reference any document which is determined to be a *prima facie* art reference against the claims of the present application.

Milwaukee Electric Tool, Keter Home and Garden Products – Ex. 2003 - Page 1162
Klein Tools v. Milwaukee Electric Tool, Keter Home and Garden Products
IPR2024-01400

TIMING OF THE DISCLOSURE

The listed documents are being submitted in compliance with 37 CFR §1.97(b)(1), within three (3) months of the filing date of the application.

RELEVANCE OF EACH DOCUMENT

The relevance of the foreign-language document is shown in the figures of foreign-language documents and/or are described in the English-language abstract submitted herewith, where available. An English translation of the foreign-language document is not readily available. However, the absence of such translation does not relieve the PTO from its duty to consider the submitted foreign language document (37 CFR §1.98 and MPEP §609).

Applicants respectfully request that each listed document be considered by the Examiner and be made of record in the present application and that an initialed copy of Form PTO/SB/08 be returned in accordance with MPEP §609.

Although Applicant believes that no fee is required for this Request, the Commissioner is hereby authorized to charge any additional fees which may be required for this Request to Deposit Account No. 18-0882.

Respectfully submitted,

Date March 31, 2020

By /Derek H. Campbell/

Reinhart Boerner Van Deuren s.c.
Customer Number: 142078
Telephone: (414) 298-8374
Facsimile: (414) 298-8097

Derek H. Campbell
Attorney for Applicant
Registration No. 70,608

Milwaukee Electric Tool, Keter Home and Garden Products – Ex. 2003 - Page 1163
Klein Tools v. Milwaukee Electric Tool, Keter Home and Garden Products
IPR2024-01400

UNITED STATES PATENT AND TRADEMARK OFFICE

UNITED STATES DEPARTMENT OF COMMERCE
United States Patent and Trademark Office
Address: COMMISSIONER FOR PATENTS
P.O. Box 1450
Alexandria, Virginia 22313-1450
www.uspto.gov

APPLICATION NUMBER	FILING OR 371(C) DATE	FIRST NAMED APPLICANT	ATTY. DOCKET NO./TITLE
16/752,441	01/24/2020	Yaron Brunner	066749-2584

CONFIRMATION NO. 9540

FORMALITIES LETTER

142078
Reinhart (Milwaukee Tool)
ATTN: TRAVIS MCDONNELL, PARALEGAL
1000 NORTH WATER STREET
SUITE 2100
MILWAUKEE, WI 53202

OC000000114667895

Date Mailed: 02/13/2020

NOTICE OF OMITTED ITEM(S) IN A NONPROVISIONAL APPLICATION

FILED UNDER 37 CFR 1.53(b)

A filing date has been accorded to the above-identified nonprovisional application papers; however, the following item(s) appear to have been omitted from the application:

- Figure(s) **7, 12** described in the specification.

Applicant must reply to this notice within the time period set forth in this notice to avoid abandonment of this application. Applicant must select one of the three following options and the reply must comply with the requirements set forth in the selected option and any other requirements set forth in this notice. **The reply should also indicate which option applicant has selected.**

I. Petition for date of deposit: Should applicant contend that the above-noted omitted item(s) was in fact deposited in the U.S. Patent and Trademark Office (USPTO) with the nonprovisional application papers, a copy of this Notice and a petition (and the petition fee set forth in 37 CFR 1.17(f) with evidence of such deposit must be filed within **TWO MONTHS** of the date of this Notice. The petition fee will be refunded if it is determined that the item(s) was received by the USPTO. THIS TWO MONTH PERIOD IS EXTENDABLE UNDER 37 CFR 1.136(a) or (b).

Applicant should review their application file and determine whether their file differs from USPTO's records. In some situations there may be a mislabeling of the drawings and/or a failure to describe in the brief description each of the figures as labeled. See 37 CFR 1.74, 1.77(b)(9), and 1.84(u)(1).

The brief description of the drawings in the specification must correspond with the figures and the figures must be labeled in accordance with 37 CFR 1.84(u)(1). For example, if the brief description describes Figure 1 and Figure 2 only, but the drawings show Fig. 1 and Fig. 2A and Fig. 2B, then the specification must be amended to refer to Figure 2A and Figure 2B and delete the reference to Figure 2 and a substitute specification in compliance with 37 CFR 1.52, 1.121(b)(3), and 1.125, is required. As another example, if a drawing is labeled Figure 2, but there are actually multiple figures within the labeled Figure 2 having labels A, B, and C, then the drawings must be relabeled in accordance with 37 CFR 1.84(u)(1) (e.g., Fig. 2A, Fig. 2B, and Fig. 2C). If the specification does not refer to the figures as relabeled, then the specification must be amended to refer to the relabeled figures (e.g., Fig. 2A, Fig. 2B, and Fig. 2C) and a substitute specification in compliance with 37 CFR 1.52, 1.121(b)(3), and 1.125, is required. A petition for date of deposit under option I should NOT be filed in either situation or in similar situations where there is simply a mislabeling of the drawings and/or a failure to describe in the brief description each of the figures. Instead, applicant should file a reply under option III.A below (including replacement drawing sheets and/or a substitute specification as required in III.A.2).

A petition for date of deposit under option I should NOT be filed in situations where there is simply a mislabeling of the drawings and/or a failure to describe in the brief description each of the figures. Instead, applicant should file a reply under option III(A) below (including replacement drawing sheets and/or a substitute specification as described).

II. Petition for later filing date: Should applicant desire to supply the omitted item(s) and accept the date that such omitted item(s) was filed in the USPTO as the filing date of the above-identified application, a copy of this Notice, the omitted item(s), and a petition under 37 CFR 1.182 with the petition fee set forth in 37 CFR 1.17(f) requesting the later filing date must be filed within **TWO MONTHS** of the date of this Notice. THIS TWO MONTH PERIOD IS EXTENDABLE UNDER 37 CFR 1.136(a) or (b).

Applicant is advised that generally the filing fee required for an application is the filing fee in effect on the filing date accorded the application and that payment of the requisite basic filing fee on a date later than the filing date of the application requires payment of a surcharge (37 CFR 1.16(f)). To avoid processing delays and payment of a surcharge, applicant should submit any balance due for the requisite filing fee based on the later filing date being requested when submitting the omitted item(s) and the petition (and petition fee) requesting the later filing date.

III. Acceptance of application as deposited: Applicant may accept the application as deposited in the USPTO by filing an appropriate amendment as set forth in either (A) or (B) below within **TWO MONTHS** of the date of this Notice. THIS TWO MONTH PERIOD IS EXTENDABLE UNDER 37 CFR 1.136(a) or (b) . The application will maintain a filing date as of the date of deposit of the application papers in the USPTO, and original application papers (i.e., the original disclosure of the invention) will include only those application papers present in the USPTO on the date of deposit. A petition is not required for this option.

(A) If applicant wants to accept the application as deposited without adding the subject matter that was in the omitted item, applicant is required to submit one or more of the following items without adding any new matter (see 35 U.S.C. 132(a)):

To remove a missing figure of the drawings or to correct the figure labeling,

- replacement drawing sheets in compliance with 37 CFR 1.121(d) to renumber the drawing figures consecutively (if necessary), and/or
- a substitute specification excluding claims in compliance with 37 CFR 1.121(b)(3) and 1.125 that amends the specification to cancel any references to any omitted drawing(s) and corrects the references in the specification to the drawing figures to correspond with any relabeled drawing figures,

A proper substitute specification in compliance with 37 CFR 1.121(b)(3) and 1.125 consists of:

- A copy of the previously-submitted specification, with deletions shown with strikethrough or brackets and insertions shown with underlining (marked-up version) unless it is indicated above that a marked-up version is not required for each of the correction(s).
- A copy of the amended specification without markings (clean version).
- A statement that the substitute specification contains no new matter, in compliance with 37 CFR 1.121(b)(3) and 1.125.

(B) Alternatively, if applicant wants to accept the application as deposited but wishes to add the subject matter in the omitted item by relying on an incorporation by reference under 37 CFR 1.57 or other portions of the original disclosure, applicant is required to submit the following without adding any new matter (see 35 U.S.C. 132(a)):

To add a missing figure of the drawings, new and replacement drawing sheets in compliance with 37 CFR 1.121(d);

If applicant is relying on an incorporation by reference under 37 CFR 1.57 to add the omitted subject matter, then applicant must also comply with the requirements of 37 CFR 1.57.

Applicant is cautioned that correction of the above items may cause the specification and drawings page count to exceed 100 pages. If the specification and drawings exceed 100 pages, applicant will need to submit the required application size fee.

Replies must be received in the USPTO within the set time period or must include a proper Certificate of Mailing or Transmission under 37 CFR 1.8 with a mailing or transmission date within the set time period. For more information and a suggested format, see Form PTO/SB/92 and MPEP 512.

Replies should be mailed to:

Mail Stop Missing Parts
Commissioner for Patents
P.O. Box 1450
Alexandria VA 22313-1450

Registered users of EFS-Web may alternatively submit their reply to this notice via EFS-Web, including a copy of this Notice and selecting the document description "Applicant response to Pre-Exam Formalities Notice". https://sportal.uspto.gov/authenticate/AuthenticateUserLocalEPF.html

For more information about EFS-Web please call the USPTO Electronic Business Center at 1-866-217-9197 or visit our website at http://www.uspto.gov/ebc.

If you are not using EFS-Web to submit your reply, you must include a copy of this notice.

Questions about the contents of this notice and the requirements it sets forth should be directed to the Office of Data Management, Application Assistance Unit, at **(571) 272-4000** or **(571) 272-4200** or **1-888-786-0101**.

/aabranyos/

PATENT APPLICATION FEE DETERMINATION RECORD Substitute for Form PTO-875	Application or Docket Number 16/752,441

APPLICATION AS FILED - PART I

FOR	(Column 1) NUMBER FILED	(Column 2) NUMBER EXTRA	SMALL ENTITY RATE($)	SMALL ENTITY FEE($)	OR	OTHER THAN SMALL ENTITY RATE($)	OTHER THAN SMALL ENTITY FEE($)
BASIC FEE (37 CFR 1.16(a), (b), or (c))	N/A	N/A	N/A			N/A	300
SEARCH FEE (37 CFR 1.16(k), (i), or (m))	N/A	N/A	N/A			N/A	660
EXAMINATION FEE (37 CFR 1.16(o), (p), or (q))	N/A	N/A	N/A			N/A	760
TOTAL CLAIMS (37 CFR 1.16(i))	20 minus 20 =	*			OR	x 100 =	0.00
INDEPENDENT CLAIMS (37 CFR 1.16(h))	3 minus 3 =	*				x 460 =	0.00
APPLICATION SIZE FEE (37 CFR 1.16(s))	If the specification and drawings exceed 100 sheets of paper, the application size fee due is $310 ($155 for small entity) for each additional 50 sheets or fraction thereof. See 35 U.S.C. 41(a)(1)(G) and 37 CFR 1.16(s).						0.00
MULTIPLE DEPENDENT CLAIM PRESENT (37 CFR 1.16(j))							0.00
* If the difference in column 1 is less than zero, enter "0" in column 2.			TOTAL			TOTAL	1720

APPLICATION AS AMENDED - PART II

AMENDMENT A		(Column 1) CLAIMS REMAINING AFTER AMENDMENT		(Column 2) HIGHEST NUMBER PREVIOUSLY PAID FOR	(Column 3) PRESENT EXTRA	SMALL ENTITY RATE($)	SMALL ENTITY ADDITIONAL FEE($)	OR	OTHER THAN SMALL ENTITY RATE($)	OTHER THAN SMALL ENTITY ADDITIONAL FEE($)
	Total (37 CFR 1.16(i))	*	Minus	**	=	x =		OR	x =	
	Independent (37 CFR 1.16(h))	*	Minus	***	=	x =		OR	x =	
	Application Size Fee (37 CFR 1.16(s))									
	FIRST PRESENTATION OF MULTIPLE DEPENDENT CLAIM (37 CFR 1.16(j))							OR		
						TOTAL ADD'L FEE		OR	TOTAL ADD'L FEE	

AMENDMENT B		(Column 1) CLAIMS REMAINING AFTER AMENDMENT		(Column 2) HIGHEST NUMBER PREVIOUSLY PAID FOR	(Column 3) PRESENT EXTRA	RATE($)	ADDITIONAL FEE($)	OR	RATE($)	ADDITIONAL FEE($)
	Total (37 CFR 1.16(i))	*	Minus	**	=	x =		OR	x =	
	Independent (37 CFR 1.16(h))	*	Minus	***	=	x =		OR	x =	
	Application Size Fee (37 CFR 1.16(s))									
	FIRST PRESENTATION OF MULTIPLE DEPENDENT CLAIM (37 CFR 1.16(j))							OR		
						TOTAL ADD'L FEE		OR	TOTAL ADD'L FEE	

* If the entry in column 1 is less than the entry in column 2, write "0" in column 3.
** If the "Highest Number Previously Paid For" IN THIS SPACE is less than 20, enter "20".
*** If the "Highest Number Previously Paid For" IN THIS SPACE is less than 3, enter "3".
The "Highest Number Previously Paid For" (Total or Independent) is the highest found in the appropriate box in column 1.

UNITED STATES PATENT AND TRADEMARK OFFICE

UNITED STATES DEPARTMENT OF COMMERCE
United States Patent and Trademark Office
Address: COMMISSIONER FOR PATENTS
P.O. Box 1450
Alexandria, Virginia 22313-1450
www.uspto.gov

APPLICATION NUMBER	FILING or 371(c) DATE	GRP ART UNIT	FIL FEE REC'D	ATTY.DOCKET.NO	TOT CLAIMS	IND CLAIMS
16/752,441	01/24/2020	3633	1720	066749-2584	20	3

CONFIRMATION NO. 9540

FILING RECEIPT

142078
Reinhart (Milwaukee Tool)
ATTN: TRAVIS MCDONNELL, PARALEGAL
1000 NORTH WATER STREET
SUITE 2100
MILWAUKEE, WI 53202

Date Mailed: 02/13/2020

Receipt is acknowledged of this non-provisional utility patent application. The application will be taken up for examination in due course. Applicant will be notified as to the results of the examination. Any correspondence concerning the application must include the following identification information: the U.S. APPLICATION NUMBER, FILING DATE, NAME OF FIRST INVENTOR, and TITLE OF INVENTION. Fees transmitted by check or draft are subject to collection.

Please verify the accuracy of the data presented on this receipt. If an error is noted on this Filing Receipt, please submit a written request for a corrected Filing Receipt, including a properly marked-up ADS showing the changes with strike-through for deletions and underlining for additions. If you received a "Notice to File Missing Parts" or other Notice requiring a response for this application, please submit any request for correction to this Filing Receipt with your reply to the Notice. When the USPTO processes the reply to the Notice, the USPTO will generate another Filing Receipt incorporating the requested corrections provided that the request is grantable.

Inventor(s)

Yaron Brunner, Kibbutz Gvat, ISRAEL;
Grant T. Squiers, Cudahy, WI;
Christopher S. Hoppe, Milwaukee, WI;
Steven W. Hyma, Milwaukee, WI;

Applicant(s)

Milwaukee Electric Tool Corporation, Brookfield, WI;

Power of Attorney: The patent practitioners associated with Customer Number 142078

Domestic Priority data as claimed by applicant

This application is a CON of 16/216,724 12/11/2018
which is a CON of 15/826,232 11/29/2017
which is a CON of PCT/IL2017/050481 04/30/2017
which claims benefit of 62/459,076 02/15/2017
and claims benefit of 62/330,334 05/02/2016

Foreign Applications for which priority is claimed (You may be eligible to benefit from the **Patent Prosecution Highway** program at the USPTO. Please see http://www.uspto.gov for more information.) - None.
Foreign application information must be provided in an Application Data Sheet in order to constitute a claim to foreign priority. See 37 CFR 1.55 and 1.76.

Permission to Access Application via Priority Document Exchange: No

Permission to Access Search Results: No

Applicant may provide or rescind an authorization for access using Form PTO/SB/39 or Form PTO/SB/69 as appropriate.

If Required, Foreign Filing License Granted: 02/12/2020
The country code and number of your priority application, to be used for filing abroad under the Paris Convention, is **US 16/752,441**
Projected Publication Date: To Be Determined - pending completion of Omitted Items
Non-Publication Request: No
Early Publication Request: No
Title

Utility Assembly and Coupling Mechanism

Preliminary Class

052

Statement under 37 CFR 1.55 or 1.78 for AIA (First Inventor to File) Transition Applications: No

PROTECTING YOUR INVENTION OUTSIDE THE UNITED STATES

Since the rights granted by a U.S. patent extend only throughout the territory of the United States and have no effect in a foreign country, an inventor who wishes patent protection in another country must apply for a patent in a specific country or in regional patent offices. Applicants may wish to consider the filing of an international application under the Patent Cooperation Treaty (PCT). An international (PCT) application generally has the same effect as a regular national patent application in each PCT-member country. The PCT process **simplifies** the filing of patent applications on the same invention in member countries, but **does not result** in a grant of "an international patent" and does not eliminate the need of applicants to file additional documents and fees in countries where patent protection is desired.

Almost every country has its own patent law, and a person desiring a patent in a particular country must make an application for patent in that country in accordance with its particular laws. Since the laws of many countries differ in various respects from the patent law of the United States, applicants are advised to seek guidance from specific foreign countries to ensure that patent rights are not lost prematurely.

Applicants also are advised that in the case of inventions made in the United States, the Director of the USPTO must issue a license before applicants can apply for a patent in a foreign country. The filing of a U.S. patent application serves as a request for a foreign filing license. The application's filing receipt contains further information and guidance as to the status of applicant's license for foreign filing.

Applicants may wish to consult the USPTO booklet, "General Information Concerning Patents" (specifically, the section entitled "Treaties and Foreign Patents") for more information on timeframes and deadlines for filing foreign patent applications. The guide is available either by contacting the USPTO Contact Center at 800-786-9199, or it can be viewed on the USPTO website at http://www.uspto.gov/web/offices/pac/doc/general/index.html.

For information on preventing theft of your intellectual property (patents, trademarks and copyrights), you may wish to consult the U.S. Government website, http://www.stopfakes.gov. Part of a Department of Commerce initiative, this website includes self-help "toolkits" giving innovators guidance on how to protect intellectual property in specific

countries such as China, Korea and Mexico. For questions regarding patent enforcement issues, applicants may call the U.S. Government hotline at 1-866-999-HALT (1-866-999-4258).

LICENSE FOR FOREIGN FILING UNDER

Title 35, United States Code, Section 184

Title 37, Code of Federal Regulations, 5.11 & 5.15

GRANTED

The applicant has been granted a license under 35 U.S.C. 184, if the phrase "IF REQUIRED, FOREIGN FILING LICENSE GRANTED" followed by a date appears on this form. Such licenses are issued in all applications where the conditions for issuance of a license have been met, regardless of whether or not a license may be required as set forth in 37 CFR 5.15. The scope and limitations of this license are set forth in 37 CFR 5.15(a) unless an earlier license has been issued under 37 CFR 5.15(b). The license is subject to revocation upon written notification. The date indicated is the effective date of the license, unless an earlier license of similar scope has been granted under 37 CFR 5.13 or 5.14.

This license is to be retained by the licensee and may be used at any time on or after the effective date thereof unless it is revoked. This license is automatically transferred to any related applications(s) filed under 37 CFR 1.53(d). This license is not retroactive.

The grant of a license does not in any way lessen the responsibility of a licensee for the security of the subject matter as imposed by any Government contract or the provisions of existing laws relating to espionage and the national security or the export of technical data. Licensees should apprise themselves of current regulations especially with respect to certain countries, of other agencies, particularly the Office of Defense Trade Controls, Department of State (with respect to Arms, Munitions and Implements of War (22 CFR 121-128)); the Bureau of Industry and Security, Department of Commerce (15 CFR parts 730-774); the Office of Foreign AssetsControl, Department of Treasury (31 CFR Parts 500+) and the Department of Energy.

NOT GRANTED

No license under 35 U.S.C. 184 has been granted at this time, if the phrase "IF REQUIRED, FOREIGN FILING LICENSE GRANTED" DOES NOT appear on this form. Applicant may still petition for a license under 37 CFR 5.12, if a license is desired before the expiration of 6 months from the filing date of the application. If 6 months has lapsed from the filing date of this application and the licensee has not received any indication of a secrecy order under 35 U.S.C. 181, the licensee may foreign file the application pursuant to 37 CFR 5.15(b).

SelectUSA

The United States represents the largest, most dynamic marketplace in the world and is an unparalleled location for business investment, innovation, and commercialization of new technologies. The U.S. offers tremendous resources and advantages for those who invest and manufacture goods here. Through SelectUSA, our nation works to promote and facilitate business investment. SelectUSA provides information assistance to the international investor community; serves as an ombudsman for existing and potential investors; advocates on behalf of U.S. cities, states, and regions competing for global investment; and counsels U.S. economic development organizations on investment attraction best practices. To learn more about why the United States is the best country in the world to develop

technology, manufacture products, deliver services, and grow your business, visit http://www.SelectUSA.gov or call +1-202-482-6800.

PTO/SB/08 (09-06)
Approved for use through 03/31/2007. OMB 0651-0031
U.S. Patent and Trademark Office: U.S. DEPARTMENT OF COMMERCE
Under the Paperwork Reduction Act of 1995, no persons are required to respond to a collection of information unless it contains a valid OMB control number.

Substitute for form 1449/PTO				Complete if Known	
INFORMATION DISCLOSURE STATEMENT BY APPLICANT				**Application Number**	To be determined
				Filing Date	January 24, 2020
Date Submitted: January 24, 2020				**First Named Inventor**	Yaron Brunner
				Art Unit	To be determined
(use as many sheets as necessary)				Examiner Name	To be determined
Sheet	1	of	10	Attorney Docket Number	066749-2584

U.S. PATENT DOCUMENTS

Examiner Initials*	Cite No.[1]	Document Number Number-Kind Code[2] (*if known*)	Publication Date MM-DD-YYYY	Name of Patentee or Applicant of Cited Document	Pages, Columns, Lines, Where Relevant Passages or Relevant Figures Appear
	A1	2,042,387	05-26-1936	COBB DAVID F	
	A2	2,430,200	11-04-1947	Wilson Winfred E.	
	A3	2,970,358	02-07-1961	E. C. Elsner	
	A4	3,117,692	01-14-1964	Carpenter et al.	
	A5	3,506,321	04-14-1970	Hampel	
	A6	3,974,898	08-17-978	Tullis et al.	
	A7	4,168,076	09-18-1979	Johnson	
	A8	5,035,445	07-30-1991	Poulin	
	A9	5,105,947	04-21-1992	Wise, Thomas W.	
	A10	5,240,264	08-31-1993	Williams	
	A11	5,301,829	04-12-1994	Chrisco	
	A12	5,429,260	07-041995	Vollers; Gary L.	
	A13	5,595,228	01-21-1997	Meisner et al.	
	A14	5,608,603	03-04-1997	Su	
	A15	5,628,443	05-13-1997	Deutsch	
	A16	5,797,617	08-25-1998	Lin Shiou Chang	
	A17	5,951,037	09-14-1999	Hsieh Hung-Ching	
	A18	5,988,473	11-23-1999	Hagan et al.	
	A19	6,050,660	04-18-2000	Gurley	
	A20	6,085,925	07-11-2000	Chung	
	A21	6,109,627	08-29-2000	Sung Hoan Be	
	A22	6,176,559	01-23-2001	Tiramani et al.	
	A23	6,347,847	02-19-2002	Tiramani et al.	
	A24	6,367,631	04-09-2002	Steigerwald	
	A25	6,371,320	04-16-2002	Sagol	
	A26	6,431,580	08-13-2002	Darren J. Kady	
	A27	6,547,347	04-15-2003	Saito; Yoshiyuki	
	A28	6,601,930	08-05-2003	Tiramani et al.	

Examiner Signature		Date Considered	

*EXAMINER: Initial if reference considered, whether or not citation is in conformance with MPEP 609. Draw line through citation if not in conformance and not considered. Include copy of this form with next communication to applicant. 1 Applicant's unique citation designation number (optional). 2 See Kinds Codes of USPTO Patent Documents at www.uspto.gov or MPEP 901.04. 3 Enter Office that issued the document, by the two-letter code (WIPO Standard ST.3). 4 For Japanese patent documents, the indication of the year of the reign of the Emperor must precede the serial number of the patent document. 5 Kind of document by the appropriate symbols as indicated on the document under WIPO Standard ST.16 if possible. 6 Applicant is to place a check mark here if English language Translation is attached. This collection of information is required by 37 CFR 1.97 and 1.98. The information is required to obtain or retain a benefit by the public which is to file (and by the USPTO to process) an application. Confidentiality is governed by 35 U.S.C. 122 and 37 CFR 1.14. This collection is estimated to take 2 hours to complete, including gathering, preparing, and submitting the completed application form to the USPTO. Time will vary depending upon the individual case. Any comments on the amount of time you require to complete this form and/or suggestions for reducing this burden, should be sent to the Chief Information Officer, U.S. Patent and Trademark Office, P.O. Box 1450, Alexandria, VA 22313-1450. DO NOT SEND FEES OR COMPLETED FORMS TO THIS ADDRESS. **SEND TO: Commissioner for Patents, P.O. Box 1450, Alexandria, VA 22313-1450**.

If you need assistance in completing the form, call 1-800-PTO-9199 (1-800-786-9199) and select option 2.

Under the Paperwork Reduction Act of 1995, no persons are required to respond to a collection of information unless it contains a valid OMB control number.

Substitute for form 1449/PTO				Complete if Known	
INFORMATION DISCLOSURE STATEMENT BY APPLICANT				**Application Number**	To be determined
				Filing Date	January 24, 2020
Date Submitted: January 24, 2020				**First Named Inventor**	Yaron Brunner
				Art Unit	To be determined
(use as many sheets as necessary)				Examiner Name	To be determined
Sheet	2	of	10	Attorney Docket Number	066749-2584

U.S. PATENT DOCUMENTS

Examiner Initials*	Cite No.[1]	Document Number	Publication Date MM-DD-YYYY	Name of Patentee or Applicant of Cited Document	Pages, Columns, Lines, Where Relevant
	A29	6,619,772	09-16-2003	Dierbeck	
	A30	6,637,707	10-28-2003	Gates; George D.	
	A31	6,641,013	11-04-2003	Oise	
	A32	6,945,546	09-20-2005	Edward G. Guirlinger	
	A33	6,948,691	09-27-2005	Brock et al.	
	A34	6,983,946	01-10-2006	Sullivan et al.	
	A35	7,044,484	05-16-2006	Wang	
	A36	7,066,475	06-27-2006	Bret E. Barnes	
	A37	7,147,243	12-12-2006	Darren Kady	
	A38	7,263,742	09-04-2007	Guido Valentini	
	A39	7,367,571	05-06-2008	Nichols	
	A40	7,503,569	03-17-2009	Duvigneau	
	A41	7,658,887	02-09-2010	Hovatter	
	A42	7,780,026	08-24-2010	Zuckerman	
	A43	7,841,144	11-30-2010	Pervan; Darko	
	A44	8,028,845	10-04-2011	Himes	
	A45	8,132,819	03-13-2012	Landau; Eitan	
	A46	8,177,463	05-15-2012	Walker; Peter J	
	A47	8,191,910	06-05-2012	Landau et al.	
	A48	8,454,033	06-04-2013	Tsai	
	A49	8,459,495	06-11-2013	Koenig; Andreas	
	A50	8,677,661	03-25-2014	Michels; Markus	
	A51	8,689,396	04-08-2014	Melvin E. Wolfe	
	A52	8,714,355	05-06-2014	Huang	
	A53	8,813,960	08-26-2014	Fjelland; Douglas J.	
	A54	8,875,888	11-04-2014	Koenig; Andreas	
	A55	8,985,922	03-24-2015	Neumann	
	A56	9,132,543	09-15-2015	Bar-Erez; Sharon	
	A57	9,506,489	11-29-2016	Ko; Kenneth H.	

Examiner Signature		Date Considered	

*EXAMINER: Initial if reference considered, whether or not citation is in conformance with MPEP 609. Draw line through citation if not in conformance and not considered. Include copy of this form with next communication to applicant. 1 Applicant's unique citation designation number (optional). 2 See Kinds Codes of USPTO Patent Documents at www.uspto.gov or MPEP 901.04. 3 Enter Office that issued the document, by the two-letter code (WIPO Standard ST.3). 4 For Japanese patent documents, the indication of the year of the reign of the Emperor must precede the serial number of the patent document. 5 Kind of document by the appropriate symbols as indicated on the document under WIPO Standard ST.16 if possible. 6 Applicant is to place a check mark here if English language Translation is attached. This collection of information is required by 37 CFR 1.97 and 1.98. The information is required to obtain or retain a benefit by the public which is to file (and by the USPTO to process) an application. Confidentiality is governed by 35 U.S.C. 122 and 37 CFR 1.14. This collection is estimated to take 2 hours to complete, including gathering, preparing, and submitting the completed application form to the USPTO. Time will vary depending upon the individual case. Any comments on the amount of time you require to complete this form and/or suggestions for reducing this burden, should be sent to the Chief Information Officer, U.S. Patent and Trademark Office, P.O. Box 1450, Alexandria, VA 22313-1450. DO NOT SEND FEES OR COMPLETED FORMS TO THIS ADDRESS. **SEND TO: Commissioner for Patents, P.O. Box 1450, Alexandria, VA 22313-1450**.

If you need assistance in completing the form, call 1-800-PTO-9199 (1-800-786-9199) and select option 2.

Under the Paperwork Reduction Act of 1995, no persons are required to respond to a collection of information unless it contains a valid OMB control number.

Substitute for form 1449/PTO				*Complete if Known*	
INFORMATION DISCLOSURE STATEMENT BY APPLICANT				**Application Number**	To be determined
				Filing Date	January 24, 2020
Date Submitted: January 24, 2020				**First Named Inventor**	Yaron Brunner
				Art Unit	To be determined
(use as many sheets as necessary)				Examiner Name	To be determined
Sheet	3	of	10	Attorney Docket Number	066749-2584

U.S. PATENT DOCUMENTS

Examiner Initials*	Cite No.[1]	Document Number	Publication Date MM-DD-YYYY	Name of Patentee or Applicant of Cited Document	Pages, Columns, Lines, Where Relevant
	A58	9,566,990	02-14-2017	Bar-Erez; Sharon	
	A59	9,616,562	04-11-2017	Hoppe; Christopher S.	
	A60	9,643,629	05-09-2017	The Stanley Works Israel Ltd.	
	A61	9,701,443	07-11-2017	Wang; Tzu-Chien	
	A62	9,872,562	01-23-2018	Brunner; Yaron	
	A63	10,434,638	10-08-2019	Tsai	
	A64	2002/0000440	01-03-2002	Sagal et al.	
	A65	2002/0171228	11-21-2002	Kady	
	A66	2003/0115715	06-26-2003	Guido Valentini	
	A67	2003/0146589	08-07-2003	Jarko et al.	
	A68	2003/0184034	10-02-2003	Pfeiffer	
	A69	2003/0205877	11-06-2003	Verna et al.	
	A70	2004/0103494	06-03-2004	Valentini	
	A71	2004/0195793	10-07-2004	Sullivan, Hugh C., et al.	
	A72	2004/0206656	10-21-2004	Dubois et al.	
	A73	2005/0062244	03-24-2005	Guirlinger	
	A74	2005/0104308	05-19-2005	Barnes	
	A75	2005/0139745	06-30-2005	Liao, Chi-Cheng	
	A76	2006/0006770	01-12-2006	Valentini	
	A77	2006/0027475	02-09-2006	Gleason et al.	
	A78	2006/0038367	02-23-2006	Ferraro; Frank A.	
	A79	2006/0119060	06-08-2006	Sullivan et al.	
	A80	2006/0186624	08-24-2006	Kady, Darren	
	A81	2006/0254946	11-16-2006	Becklin	
	A82	2007/0068757	03-29-2007	Tan	
	A83	2007/0090616	04-26-2007	Tompkins	
	A84	2007/0145700	06-28-2007	Ambrose et al.	
	A85	2007/0194543	08-23-2007	Duvigneau	
	A86	2008/0104921	05-08-2008	Pervan; Darko	

Examiner Signature		Date Considered	

*EXAMINER: Initial if reference considered, whether or not citation is in conformance with MPEP 609. Draw line through citation if not in conformance and not considered. Include copy of this form with next communication to applicant. 1 Applicant's unique citation designation number (optional). 2 See Kinds Codes of USPTO Patent Documents at www.uspto.gov or MPEP 901.04. 3 Enter Office that issued the document, by the two-letter code (WIPO Standard ST.3). 4 For Japanese patent documents, the indication of the year of the reign of the Emperor must precede the serial number of the patent document. 5 Kind of document by the appropriate symbols as indicated on the document under WIPO Standard ST.16 if possible. 6 Applicant is to place a check mark here if English language Translation is attached. This collection of information is required by 37 CFR 1.97 and 1.98. The information is required to obtain or retain a benefit by the public which is to file (and by the USPTO to process) an application. Confidentiality is governed by 35 U.S.C. 122 and 37 CFR 1.14. This collection is estimated to take 2 hours to complete, including gathering, preparing, and submitting the completed application form to the USPTO. Time will vary depending upon the individual case. Any comments on the amount of time you require to complete this form and/or suggestions for reducing this burden, should be sent to the Chief Information Officer, U.S. Patent and Trademark Office, P.O. Box 1450, Alexandria, VA 22313-1450. DO NOT SEND FEES OR COMPLETED FORMS TO THIS ADDRESS. **SEND TO: Commissioner for Patents, P.O. Box 1450, Alexandria, VA 22313-1450**.

If you need assistance in completing the form, call 1-800-PTO-9199 (1-800-786-9199) and select option 2.

Under the Paperwork Reduction Act of 1995, no persons are required to respond to a collection of information unless it contains a valid OMB control number.

Substitute for form 1449/PTO				Complete if Known	
INFORMATION DISCLOSURE STATEMENT BY APPLICANT				**Application Number**	To be determined
				Filing Date	January 24, 2020
Date Submitted: January 24, 2020				**First Named Inventor**	Yaron Brunner
				Art Unit	To be determined
(use as many sheets as necessary)				Examiner Name	To be determined
Sheet	4	of	10	Attorney Docket Number	066749-2584

U.S. PATENT DOCUMENTS

Examiner Initials*	Cite No.[1]	Document Number	Publication Date MM-DD-YYYY	Name of Patentee or Applicant of Cited Document	Pages, Columns, Lines, Where Relevant
	A87	2008/0115312	05-22-2005	DiPasquale et al.	
	A88	2008/0121547	05-29-2005	Dur et al.	
	A89	2008/0134607	06-12-2008	Pervan; Darko	
	A90	2008/0169739	07-17-2008	Goldenberg; Ruth	
	A91	2008/0271280	11-06-2008	FUCHS FRANK et al.	
	A92	2008/0277221	11-13-2008	Josefson; Mark L.	
	A93	2008/0308369	12-18-2008	Louis; Robert D.	
	A94	2009/0071990	03-19-2009	Jardine et al.	
	A95	2009/0145790	06-11-2009	Panosian; Michael Harmik	
	A96	2009/0145866	06-11-2009	Panosian et al.	
	A97	2009/0145913	06-11-2009	Panosian et al.	
	A98	2009/0178946	07-16-2009	Patstone et al.	
	A99	2010/0052276	03-04-2010	Brunner	
	A100	2010/0139566	06-10-2010	Lopuszanski, Michel	
	A101	2010/0147642	06-17-2010	Andochick; Scott E.	
	A102	2010/0219193	09-02-2010	Becklin	
	A103	2011/0073516	03-31-2011	Zelinskiy; Konstantin	
	A104	2011/0139665	06-16-2011	Madsen	
	A105	2011/0155613	06-30-2011	Koenig, Andreas et al.	
	A106	2011/0181008	07-28-2011	BENSMAN;MARK	
	A107	2011/0220531	09-15-2011	Meether et al.	
	A108	2012/0160886	06-28-2012	Henny Paul et al.	
	A109	2012/0180250	07-19-2012	KAERCHER GMBH AND CO ALFRED KG	
	A110	2012/0207571	08-16-2012	Scott, Charles Shay	
	A111	2012/0326406	12-27-2012	LIFSHITZ; Omri	
	A112	2013/0024468	01-24-2013	Kocsis, Susan C.	
	A113	2013/0031731	02-07-2013	KAERCHER GMBH AND CO ALFRED KG	
	A114	2013/0031732	02-07-2013	KAERCHER GMBH AND CO ALFRED KG	

Examiner Signature		Date Considered	

*EXAMINER: Initial if reference considered, whether or not citation is in conformance with MPEP 609. Draw line through citation if not in conformance and not considered. Include copy of this form with next communication to applicant. 1 Applicant's unique citation designation number (optional). 2 See Kinds Codes of USPTO Patent Documents at www.uspto.gov or MPEP 901.04. 3 Enter Office that issued the document, by the two-letter code (WIPO Standard ST.3). 4 For Japanese patent documents, the indication of the year of the reign of the Emperor must precede the serial number of the patent document. 5 Kind of document by the appropriate symbols as indicated on the document under WIPO Standard ST.16 if possible. 6 Applicant is to place a check mark here if English language Translation is attached. This collection of information is required by 37 CFR 1.97 and 1.98. The information is required to obtain or retain a benefit by the public which is to file (and by the USPTO to process) an application. Confidentiality is governed by 35 U.S.C. 122 and 37 CFR 1.14. This collection is estimated to take 2 hours to complete, including gathering, preparing, and submitting the completed application form to the USPTO. Time will vary depending upon the individual case. Any comments on the amount of time you require to complete this form and/or suggestions for reducing this burden, should be sent to the Chief Information Officer, U.S. Patent and Trademark Office, P.O. Box 1450, Alexandria, VA 22313-1450. DO NOT SEND FEES OR COMPLETED FORMS TO THIS ADDRESS. **SEND TO: Commissioner for Patents, P.O. Box 1450, Alexandria, VA 22313-1450**.

If you need assistance in completing the form, call 1-800-PTO-9199 (1-800-786-9199) and select option 2.

Under the Paperwork Reduction Act of 1995, no persons are required to respond to a collection of information unless it contains a valid OMB control number.

Substitute for form 1449/PTO				*Complete if Known*	
INFORMATION DISCLOSURE STATEMENT BY APPLICANT				**Application Number**	To be determined
				Filing Date	January 24, 2020
Date Submitted: January 24, 2020				**First Named Inventor**	Yaron Brunner
				Art Unit	To be determined
(use as many sheets as necessary)				Examiner Name	To be determined
Sheet	5	of	10	Attorney Docket Number	066749-2584

U.S. PATENT DOCUMENTS

Examiner Initials*	Cite No.[1]	Document Number	Publication Date MM-DD-YYYY	Name of Patentee or Applicant of Cited Document	Pages, Columns, Lines, Where Relevant
	A115	2013/0121783	05-16-2013	Kelly; Thomas P.	
	A116	2013/0127129	05-23-2013	Bensman, Mark et al.	
	A117	2013/0223971	08-29-2013	Grace IV, Robert W.	
	A118	2014/0161518	06-12-2014	KO	
	A119	2014/0166516	06-19-2014	Martinez; Mark R.	
	A120	2016/0023349	01-28-2016	Milwaukee Electric Tool Corporation	
	A121	2016/0130034	05-12-2016	Kuhls; Timo	
	A122	2016/0144500	05-26-2016	CHEN; KUN-CHEN	
	A123	2016/0168880	06-16-2016	Phelan; Matthew	
	A124	2017/0121056	05-04-2017	Wang; Tzu-Chien	
	A125	2017/0138382	05-18-2017	Ko	
	A126	2017/0165828	06-15-2017	Festool GmbH	
	A127	2017/0166352	06-15-2017	Hoppe; Christopher S.	
	A128	2017/0174392	06-22-2017	De Loynes	
	A129	2017/0217464	08-03-2017	Bar-erez et al.	
	A130	2017/0239808	08-24-2017	Hoppe; Christopher S.	
	A131	2017/0257958	09-07-2017	Sabbag et al.	
	A132	2017/0257958	09-07-2017	The Stanley Works Israel Ltd.	
	A133	2017/0266804	09-21-2017	Kinskey	
	A134	2017/0318927	11-09-2017	Krause et al.	
	A135	2018/0044059	02-15-2018	BRUNNER; Yaron	
	A136	2018/0161975	06-14-2018	Brunner; Yaron	
	A137	2018/0220758	08-09-2018	Rothenberger AG	
	A138	2018/0290288	10-11-2018	BRUNNER; Yaron	
	A139	2019/0002004	01-03-2019	BRUNNER; Yaron	
	A140	2019/0039781	02-07-2019	Kogel	
	A141	2019/0106244	04-11-2019	Brunner et al.	
	A142	2019/0225371	07-25-2019	Hoppe et al.	
	A143	D525,789	08-01-2006	Hosking	

Examiner Signature		Date Considered	

*EXAMINER: Initial if reference considered, whether or not citation is in conformance with MPEP 609. Draw line through citation if not in conformance and not considered. Include copy of this form with next communication to applicant. 1 Applicant's unique citation designation number (optional). 2 See Kinds Codes of USPTO Patent Documents at www.uspto.gov or MPEP 901.04. 3 Enter Office that issued the document, by the two-letter code (WIPO Standard ST.3). 4 For Japanese patent documents, the indication of the year of the reign of the Emperor must precede the serial number of the patent document. 5 Kind of document by the appropriate symbols as indicated on the document under WIPO Standard ST.16 if possible. 6 Applicant is to place a check mark here if English language Translation is attached. This collection of information is required by 37 CFR 1.97 and 1.98. The information is required to obtain or retain a benefit by the public which is to file (and by the USPTO to process) an application. Confidentiality is governed by 35 U.S.C. 122 and 37 CFR 1.14. This collection is estimated to take 2 hours to complete, including gathering, preparing, and submitting the completed application form to the USPTO. Time will vary depending upon the individual case. Any comments on the amount of time you require to complete this form and/or suggestions for reducing this burden, should be sent to the Chief Information Officer, U.S. Patent and Trademark Office, P.O. Box 1450, Alexandria, VA 22313-1450. DO NOT SEND FEES OR COMPLETED FORMS TO THIS ADDRESS. **SEND TO: Commissioner for Patents, P.O. Box 1450, Alexandria, VA 22313-1450**.

If you need assistance in completing the form, call 1-800-PTO-9199 (1-800-786-9199) and select option 2.

Under the Paperwork Reduction Act of 1995, no persons are required to respond to a collection of information unless it contains a valid OMB control number.

Substitute for form 1449/PTO				*Complete if Known*	
INFORMATION DISCLOSURE STATEMENT BY APPLICANT				**Application Number**	To be determined
				Filing Date	January 24, 2020
Date Submitted: January 24, 2020				**First Named Inventor**	Yaron Brunner
				Art Unit	To be determined
(use as many sheets as necessary)				Examiner Name	To be determined
Sheet	6	of	10	Attorney Docket Number	066749-2584

U.S. PATENT DOCUMENTS

Examiner Initials*	Cite No.[1]	Document Number	Publication Date MM-DD-YYYY	Name of Patentee or Applicant of Cited Document	Pages, Columns, Lines, Where Relevant
	A144	D630,851	01-18-2011	Landau et al.	
	A145	D663,952	07-24-2012	CREVLING et al.	
	A146	D664,354	07-31-2012	CREVLING et al.	
	A147	D674,605	01-22-2013	Vilkomirski et al.	
	A148	D701,696	04-01-2014	Shitrit et al.	
	A149	D753,394	04-12-2016	Brunner	
	A150	D753,395	04-12-2016	Brunner	
	A151	D765,974	09-13-2016	Tonelli et al.	
	A152	D770,179	11-01-2016	Menirom	
	A153	D790,221	06-27-2017	Yahav et al.	
	A154	D814,187	04-03-2018	Caglar	
	A155	D833,744	11-20-2018	Yahav et al.	
	A156	D837,515	04-08-2019	Shpitzer	

UNPUBLISHED U.S. PATENT APPLICATION DOCUMENTS

Examiner Initials*	Cite No.[1]	U.S. Patent Application Document Serial Number-Kind Code[2] (*if known*)	Filing Date of Cited Document MM-DD-YYYY	Name of Patentee or Applicant of Cited Document	Pages, Columns, Lines, Where Relevant Passages or Relevant Figures Appear

FOREIGN PATENT DOCUMENTS

Examiner Initials*	Cite No.[1]	Foreign Patent Document Country Code[3]-Number[4]-Kind Code[5] (*if known*)	Publication Date MM-DD-YYYY	Name of Patentee or Applicant of Cited Documents	Pages, Columns, Lines, Where Relevant Passages or Relevant Figures Appear	T[6]
	A157	CN 103118578	05-22-2013	KAERCHER GMBH AND CO ALFRED KG		
	A158	CN 200947356	09-12-2007	FU GANG		
	A159	CN 2608238	03-31-2004	BAO JIANGANG		
	A160	CN101068661	11-07-2007	BOSCH GMBH ROBERT		
	A161	CN102248523	11-23-2011	CHANGHONG HAN et al.		

Examiner Signature		Date Considered	

*EXAMINER: Initial if reference considered, whether or not citation is in conformance with MPEP 609. Draw line through citation if not in conformance and not considered. Include copy of this form with next communication to applicant. 1 Applicant's unique citation designation number (optional). 2 See Kinds Codes of USPTO Patent Documents at www.uspto.gov or MPEP 901.04. 3 Enter Office that issued the document, by the two-letter code (WIPO Standard ST.3). 4 For Japanese patent documents, the indication of the year of the reign of the Emperor must precede the serial number of the patent document. 5 Kind of document by the appropriate symbols as indicated on the document under WIPO Standard ST.16 if possible. 6 Applicant is to place a check mark here if English language Translation is attached. This collection of information is required by 37 CFR 1.97 and 1.98. The information is required to obtain or retain a benefit by the public which is to file (and by the USPTO to process) an application. Confidentiality is governed by 35 U.S.C. 122 and 37 CFR 1.14. This collection is estimated to take 2 hours to complete, including gathering, preparing, and submitting the completed application form to the USPTO. Time will vary depending upon the individual case. Any comments on the amount of time you require to complete this form and/or suggestions for reducing this burden, should be sent to the Chief Information Officer, U.S. Patent and Trademark Office, P.O. Box 1450, Alexandria, VA 22313-1450. DO NOT SEND FEES OR COMPLETED FORMS TO THIS ADDRESS. **SEND TO: Commissioner for Patents, P.O. Box 1450, Alexandria, VA 22313-1450**.

If you need assistance in completing the form, call 1-800-PTO-9199 (1-800-786-9199) and select option 2.

Under the Paperwork Reduction Act of 1995, no persons are required to respond to a collection of information unless it contains a valid OMB control number.

Substitute for form 1449/PTO				*Complete if Known*	
INFORMATION DISCLOSURE STATEMENT BY APPLICANT				**Application Number**	To be determined
				Filing Date	January 24, 2020
Date Submitted: January 24, 2020				**First Named Inventor**	Yaron Brunner
				Art Unit	To be determined
(use as many sheets as necessary)				Examiner Name	To be determined
Sheet	7	of	10	Attorney Docket Number	066749-2584

FOREIGN PATENT DOCUMENTS

Examiner Initials*	Cite No.[1]	Foreign Patent Document Country Code[3]-Number[4]-Kind Code[5] (*if known*)	Publication Date MM-DD-YYYY	Name of Patentee or Applicant of Cited Documents	Pages, Columns, Lines, Where Relevant Passages or Relevant Figures Appear	T[6]
	A162	CN102469899	05-23-2012	KAERCHER GMBH AND CO KG ALFRED		
	A163	CN102834035	12-19-2012	KAERCHER GMBH AND CO ALFRED KG		
	A164	DE 202015005752	11-21-2016	PLASTON AG		
	A165	DE 202015105053	10-31-2016	AUER PACKAGING GMBH		
	A166	DE102004057870	06-01-2006	BOSCH GMBH ROBERT		
	A167	DE102010003754	10-13-2011	KAERCHER GMBH AND CO ALFRED KG		
	A168	DE102010003756	10-13-2011	KAERCHER GMBH AND CO ALFRED KG		
	A169	DE102012106482	01-23-2014	WAIGEL JOACHIM		
	A170	DE102012220837	05-15-2014	BOSCH GMBH ROBERT		
	A171	DE102015013053	04-13-2017	BURCHIA ROLF		
	A172	DE102015112204	02-16-2017	PERL MICHAEL		
	A173	DE19750543	05-20-1999	FESTO TOOLTECHNIC GMBH AND CO		
	A174	DE202011002617	04-28-2011	Bekuplast Kunststoffverarbeitungs-GmbH		
	A175	DE20218996	03-06-2003	TTS TOOLTECHNIC SYSTEMS AG		
	A176	DE29708343	07-03-1997	FLIESEN RICHTER GMBH		
	A177	DE3510307	09-25-1986	SPIELHOFF HANS-PETER		
	A178	DE4415638	11-09-1995	Halm		
	A179	DE9313802	12-02-1993	TUNG I ENTERPRISE CO		
	A180	EM000705231-0001	04-12-2007	Terry Store-Age S.P.A.		
	A181	EM002419283-0001	03-06-2014	Keter Plastic Ltd.		
	A182	EP0916302	05-19-1999	FESTO TOOLTECHNIC GMBH AND CO		
	A183	EP1321247	06-25-2003	VALENTINI GUIDO		
	A184	EP1428764B1	06-16-2004	DUBOIS JEAN-MARC et al.		

Examiner Signature		Date Considered	

*EXAMINER: Initial if reference considered, whether or not citation is in conformance with MPEP 609. Draw line through citation if not in conformance and not considered. Include copy of this form with next communication to applicant. 1 Applicant's unique citation designation number (optional). 2 See Kinds Codes of USPTO Patent Documents at www.uspto.gov or MPEP 901.04. 3 Enter Office that issued the document, by the two-letter code (WIPO Standard ST.3). 4 For Japanese patent documents, the indication of the year of the reign of the Emperor must precede the serial number of the patent document. 5 Kind of document by the appropriate symbols as indicated on the document under WIPO Standard ST.16 if possible. 6 Applicant is to place a check mark here if English language Translation is attached. This collection of information is required by 37 CFR 1.97 and 1.98. The information is required to obtain or retain a benefit by the public which is to file (and by the USPTO to process) an application. Confidentiality is governed by 35 U.S.C. 122 and 37 CFR 1.14. This collection is estimated to take 2 hours to complete, including gathering, preparing, and submitting the completed application form to the USPTO. Time will vary depending upon the individual case. Any comments on the amount of time you require to complete this form and/or suggestions for reducing this burden, should be sent to the Chief Information Officer, U.S. Patent and Trademark Office, P.O. Box 1450, Alexandria, VA 22313-1450. DO NOT SEND FEES OR COMPLETED FORMS TO THIS ADDRESS. **SEND TO: Commissioner for Patents, P.O. Box 1450, Alexandria, VA 22313-1450**.

If you need assistance in completing the form, call 1-800-PTO-9199 (1-800-786-9199) and select option 2.

Under the Paperwork Reduction Act of 1995, no persons are required to respond to a collection of information unless it contains a valid OMB control number.

Substitute for form 1449/PTO				*Complete if Known*	
INFORMATION DISCLOSURE STATEMENT BY APPLICANT				**Application Number**	To be determined
				Filing Date	January 24, 2020
Date Submitted: January 24, 2020				**First Named Inventor**	Yaron Brunner
				Art Unit	To be determined
(use as many sheets as necessary)				Examiner Name	To be determined
Sheet	8	of	10	Attorney Docket Number	066749-2584

FOREIGN PATENT DOCUMENTS

Examiner Initials*	Cite No.[1]	Foreign Patent Document Country Code[3]-Number[4]-Kind Code[5] (*if known*)	Publication Date MM-DD-YYYY	Name of Patentee or Applicant of Cited Documents	Pages, Columns, Lines, Where Relevant Passages or Relevant Figures Appear	T[6]
	A185	EP1819487	08-22-2007	BOSCH GMBH ROBERT		
	A186	EP2289671	03-02-2011	Stanley Works Israel		
	A187	EP2346741	07-27-2011	MADSEN JENS OLE		
	A188	EP2456341	05-30-2012	KAERCHER GMBH AND CO ALFRED KG		
	A189	EP2555660	02-13-2013	KAERCHER GMBH AND CO ALFRED KG		
	A190	EP2555661	02-13-2013	KAERCHER GMBH AND CO ALFRED KG		
	A191	EP2805799	11-23-2016	FLEISCHMANN BERND et al.		
	A192	EP3141354	03-15-2017	KOCH SIMON et al.		
	A193	GB2047181B	02-02-1983	REUNIS SA ATELIERS		
	A194	GB2330521	04-28-1999	SPOONER PAUL		
	A195	GB2406331	03-30-2005	JEFFRIES JULIAN CLIFFORD		
	A196	GB2413265	10-26-2005	THOMSON BRIAN		
	A197	GB694707	07-22-1953	GEORGE ARTHUR CHARD		
	A198	JP 1276744	07-18-2006	Hirofumi Kishimoto		
	A199	JP 1477050	08-19-2013	Ryosuke Omachi		
	A200	JP2003194020A	07-09-2003	SUGIMURA ATSUAKI		
	A201	KR 30-0271616	02-09-2000	Joong Chui Ahm		
	A202	KR 30-0320243	06-10-2002	Joung Gu Kang		
	A203	TW 135074	06-01-2010	Yi Hua Wu		
	A204	TW 168686	07-01-2015	Kang Delun Business Co., Ltd.		
	A205	TW 174412	03-21-2016	Lee Hsin Chang		
	A206	WO 2005/045886	05-19-2005	Brooks Automation, Inc.		
	A207	WO 2016142935	09-15-2016	BRUNNER, Yaron et al.		
	A208	WO 2017028845	02-23-2017	ROTHENBERGER AG		
	A209	WO07121745	11-01-2007	MADSEN JENS OLE		

Examiner Signature		Date Considered	

*EXAMINER: Initial if reference considered, whether or not citation is in conformance with MPEP 609. Draw line through citation if not in conformance and not considered. Include copy of this form with next communication to applicant. 1 Applicant's unique citation designation number (optional). 2 See Kinds Codes of USPTO Patent Documents at www.uspto.gov or MPEP 901.04. 3 Enter Office that issued the document, by the two-letter code (WIPO Standard ST.3). 4 For Japanese patent documents, the indication of the year of the reign of the Emperor must precede the serial number of the patent document. 5 Kind of document by the appropriate symbols as indicated on the document under WIPO Standard ST.16 if possible. 6 Applicant is to place a check mark here if English language Translation is attached. This collection of information is required by 37 CFR 1.97 and 1.98. The information is required to obtain or retain a benefit by the public which is to file (and by the USPTO to process) an application. Confidentiality is governed by 35 U.S.C. 122 and 37 CFR 1.14. This collection is estimated to take 2 hours to complete, including gathering, preparing, and submitting the completed application form to the USPTO. Time will vary depending upon the individual case. Any comments on the amount of time you require to complete this form and/or suggestions for reducing this burden, should be sent to the Chief Information Officer, U.S. Patent and Trademark Office, P.O. Box 1450, Alexandria, VA 22313-1450. DO NOT SEND FEES OR COMPLETED FORMS TO THIS ADDRESS. **SEND TO: Commissioner for Patents, P.O. Box 1450, Alexandria, VA 22313-1450**.

If you need assistance in completing the form, call 1-800-PTO-9199 (1-800-786-9199) and select option 2.

Under the Paperwork Reduction Act of 1995, no persons are required to respond to a collection of information unless it contains a valid OMB control number.

Substitute for form 1449/PTO				*Complete if Known*	
INFORMATION DISCLOSURE STATEMENT BY APPLICANT				**Application Number**	To be determined
				Filing Date	January 24, 2020
Date Submitted: January 24, 2020				**First Named Inventor**	Yaron Brunner
				Art Unit	To be determined
(use as many sheets as necessary)				Examiner Name	To be determined
Sheet	9	of	10	Attorney Docket Number	066749-2584

FOREIGN PATENT DOCUMENTS

Examiner Initials*	Cite No.[1]	Foreign Patent Document Country Code[3]-Number[4]-Kind Code[5] (*if known*)	Publication Date MM-DD-YYYY	Name of Patentee or Applicant of Cited Documents	Pages, Columns, Lines, Where Relevant Passages or Relevant Figures Appear	T[6]
	A210	WO07121746	11-01-2007	MADSEN JENS OLE		
	A211	WO09140965	11-26-2009	MADSEN JENS OLE		
	A212	WO11009480	01-27-2011	RICKLEFSEN DIRK et al.		
	A213	WO13026084	02-28-2013	VAN DER LINDE et al.		
	A214	WO14125488	08-21-2014	BRUNNER YARON		
	A215	WO17212840	12-14-2017	FURUTA YOSHIHISA		
	A216	WO2007121745A1	11-01-2007	MADSEN JENS OLE		
	A217	WO2017191628	11-09-2017	BRUNNER YARON		

NON PATENT LITERATURE DOCUMENTS

Examiner Initials*	Cite No.[1]	Include name of the author (in CAPITAL LETTERS), title of the article (when appropriate), title of the item (book, magazine, journal, serial, symposium, catalog, etc.) date, page(s), volume-issue number(s), publisher, city and/or country where published.	T[6]
	A218	"Blitz Box – Portable Storage Box / Shelf," The Green Head Finds Cool New Stuff, https://www.thegreenhead.com/2013/03/blitz-box-portable-storage-box-shelf.php, Per Wayback, website dates back to February 15, 2015, 5 pages.	
	A219	"BluCave Universal Storage System," BATAVIA Tools to Build, https://batavia.eu/blucave-storage-system/, believed to be available at least as early as November 29, 2017, 5 pages.	
	A220	"Dewalt TSTAK Carrier Trolley," ITS, https://www.its.co.uk/pd/171229-Dewalt-TSTAK-Carrier-Trolley-_DEW171229.htm, Per Wayback, website dates back to May 2, 2015, 2 pages.	
	A221	"DeWalt TSTAK Vac Rack (Suits DW DWV902M & DWV900L) DWV9500-XJ," Get Tools Direct, https://www.gettoolsdirect.com.au/dewalt-tstak-vac-rack-suits-dwv902m-and-dwv900l-dwv9500-xj.html, believed to be available at least as early as November 29, 2017, 4 pages.	
	A222	"Hopkins FloTool 91002 Rhino Box with Mount," Amazon.com, https://www.amazon.com/exec/obidos/ASIN/B003K15F3I/20140000-20, believed to be available at least as early as November 29, 2017, 7 pages.	
	A223	"Tool Skool, TSTAK Phase 2 Upgrades | TSTAK Carts – First Look – Tool Skool," YouTube, September 7, 2013, https://www.youtube.com/watch?v=jb06y6J1dr4&feature=youtu.be&t=197, 1 page.	
	A224	Batavia Gmbh, BluCave Storage System, https://protect-us.mimecast.com/s/5XlGCR6KypcgJnlKi9EDoim?domain=batavia.eu, believed to be available at least as early as November 29, 2017, 7 pages.	

Examiner Signature		Date Considered	

*EXAMINER: Initial if reference considered, whether or not citation is in conformance with MPEP 609. Draw line through citation if not in conformance and not considered. Include copy of this form with next communication to applicant. 1 Applicant's unique citation designation number (optional). 2 See Kinds Codes of USPTO Patent Documents at www.uspto.gov or MPEP 901.04. 3 Enter Office that issued the document, by the two-letter code (WIPO Standard ST.3). 4 For Japanese patent documents, the indication of the year of the reign of the Emperor must precede the serial number of the patent document. 5 Kind of document by the appropriate symbols as indicated on the document under WIPO Standard ST.16 if possible. 6 Applicant is to place a check mark here if English language Translation is attached. This collection of information is required by 37 CFR 1.97 and 1.98. The information is required to obtain or retain a benefit by the public which is to file (and by the USPTO to process) an application. Confidentiality is governed by 35 U.S.C. 122 and 37 CFR 1.14. This collection is estimated to take 2 hours to complete, including gathering, preparing, and submitting the completed application form to the USPTO. Time will vary depending upon the individual case. Any comments on the amount of time you require to complete this form and/or suggestions for reducing this burden, should be sent to the Chief Information Officer, U.S. Patent and Trademark Office, P.O. Box 1450, Alexandria, VA 22313-1450. DO NOT SEND FEES OR COMPLETED FORMS TO THIS ADDRESS. **SEND TO: Commissioner for Patents, P.O. Box 1450, Alexandria, VA 22313-1450**.

If you need assistance in completing the form, call 1-800-PTO-9199 (1-800-786-9199) and select option 2.

PTO/SB/08 (09-06)
Approved for use through 03/31/2007. OMB 0651-0031
U.S. Patent and Trademark Office: U.S. DEPARTMENT OF COMMERCE
Under the Paperwork Reduction Act of 1995, no persons are required to respond to a collection of information unless it contains a valid OMB control number.

Substitute for form 1449/PTO				*Complete if Known*	
INFORMATION DISCLOSURE STATEMENT BY APPLICANT				**Application Number**	To be determined
				Filing Date	January 24, 2020
Date Submitted: January 24, 2020				**First Named Inventor**	Yaron Brunner
				Art Unit	To be determined
(use as many sheets as necessary)				Examiner Name	To be determined
Sheet	10	of	10	Attorney Docket Number	066749-2584

NON PATENT LITERATURE DOCUMENTS

Examiner Initials*	Cite No.[1]	Include name of the author (in CAPITAL LETTERS), title of the article (when appropriate), title of the item (book, magazine, journal, serial, symposium, catalog, etc.) date, page(s), volume-issue number(s), publisher, city and/or country where published.	T[6]
	A225	BluCave Video, https://www.youtube.com/watch?v=Sw7fQQPwoOtY&feature=youtu.be&t=32, believed to be available at least as early as November 29, 2017.	
	A226	International Search Report and Written Opinion for International Application No. PCT/IL2019/050689, dated August 23, 2019, 21 pages.	
	A227	International Search Report and Written Opinion for International Application No. PCT/US2018/033161, dated August 6, 2018, 14 pages.	
	A228	International Search Report and Written Opinion for International Application No. PCT/US2018/044629, dated January 9, 2019, 22 pages.	
	A229	International Search Report and Written Opinion for International Application No. PCT/US2019/014940, dated July 26, 2019, 7 pages.	
	A230	Sortimo Logistix, "Mobile Sortimente", brochure, believed to be available at least as early as November 29, 2017, 17 pages.	
	A231	STUART, “Ryobi ToolBlox Tool Cabinet System!,” TOOLGUYD, September 18, 2014, https://toolguyd.com/ryobi-toolblox-cabinets/, 23 pages.	
	A232	STUART, “Sys-Cart Base, a Systainer Mounting Platform,” TOOLGUYD, July 28, 2014, https://toolguyd.com/systainer-sys-cart-mounting-base/, 11 pages.	
	A233	VERTAK, https://www.alibaba.com/product-detail/Vertak-global-patented-multi-funciton-portable_60217794260.html, believed to be available at least as early as November 29, 2017.	
	A234	Non-Final Rejection issued April 12, 2018, in United States Application No. 15/826,201. (16 Pages) (Docket No. J699501JS01 446373-419).	

Examiner Signature		Date Considered	

*EXAMINER: Initial if reference considered, whether or not citation is in conformance with MPEP 609. Draw line through citation if not in conformance and not considered. Include copy of this form with next communication to applicant. 1 Applicant's unique citation designation number (optional). 2 See Kinds Codes of USPTO Patent Documents at www.uspto.gov or MPEP 901.04. 3 Enter Office that issued the document, by the two-letter code (WIPO Standard ST.3). 4 For Japanese patent documents, the indication of the year of the reign of the Emperor must precede the serial number of the patent document. 5 Kind of document by the appropriate symbols as indicated on the document under WIPO Standard ST.16 if possible. 6 Applicant is to place a check mark here if English language Translation is attached. This collection of information is required by 37 CFR 1.97 and 1.98. The information is required to obtain or retain a benefit by the public which is to file (and by the USPTO to process) an application. Confidentiality is governed by 35 U.S.C. 122 and 37 CFR 1.14. This collection is estimated to take 2 hours to complete, including gathering, preparing, and submitting the completed application form to the USPTO. Time will vary depending upon the individual case. Any comments on the amount of time you require to complete this form and/or suggestions for reducing this burden, should be sent to the Chief Information Officer, U.S. Patent and Trademark Office, P.O. Box 1450, Alexandria, VA 22313-1450. DO NOT SEND FEES OR COMPLETED FORMS TO THIS ADDRESS. **SEND TO: Commissioner for Patents, P.O. Box 1450, Alexandria, VA 22313-1450**.

If you need assistance in completing the form, call 1-800-PTO-9199 (1-800-786-9199) and select option 2.

Electronic Patent Application Fee Transmittal

Application Number:	
Filing Date:	
Title of Invention:	Utility Assembly and Coupling Mechanism
First Named Inventor/Applicant Name:	Yaron Brunner
Filer:	Derek Howard Campbell/Andrea Dietzel
Attorney Docket Number:	066749-2584

Filed as Large Entity

Filing Fees for Utility under 35 USC 111(a)

Description	Fee Code	Quantity	Amount	Sub-Total in USD($)
Basic Filing:				
UTILITY APPLICATION FILING	1011	1	300	300
UTILITY SEARCH FEE	1111	1	660	660
UTILITY EXAMINATION FEE	1311	1	760	760
Pages:				
Claims:				
Miscellaneous-Filing:				
Petition:				
Patent-Appeals-and-Interference:				

Description	Fee Code	Quantity	Amount	Sub-Total in USD($)
Post-Allowance-and-Post-Issuance:				
Extension-of-Time:				
Miscellaneous:				
		Total in USD ($)		**1720**

Electronic Acknowledgement Receipt

EFS ID:	38396901
Application Number:	16752441
International Application Number:	
Confirmation Number:	9540
Title of Invention:	Utility Assembly and Coupling Mechanism
First Named Inventor/Applicant Name:	Yaron Brunner
Customer Number:	142078
Filer:	Derek Howard Campbell/Andrea Dietzel
Filer Authorized By:	Derek Howard Campbell
Attorney Docket Number:	066749-2584
Receipt Date:	24-JAN-2020
Filing Date:	
Time Stamp:	18:40:10
Application Type:	Utility under 35 USC 111(a)

Payment information:

Submitted with Payment	yes
Payment Type	DA
Payment was successfully received in RAM	$1720
RAM confirmation Number	E20201NI40419727
Deposit Account	180882
Authorized User	Andrea Dietzel

The Director of the USPTO is hereby authorized to charge indicated fees and credit any overpayment as follows:

37 CFR 1.16 (National application filing, search, and examination fees)

37 CFR 1.17 (Patent application and reexamination processing fees)

37 CFR 1.19 (Document supply fees)

37 CFR 1.20 (Post Issuance fees)

37 CFR 1.21 (Miscellaneous fees and charges)

File Listing:

Document Number	Document Description	File Name	File Size(Bytes)/ Message Digest	Multi Part /.zip	Pages (if appl.)
1	Transmittal of New Application	066749-2584_App_Transmittal.pdf	64846 5f2a5d8050ef09703ff14217613233b87a7826dc	no	2
Warnings:					
Information:					
2	Application Data Sheet	066749-2584_ADS.pdf	83844 48827d866247b734e1ef05467aabe1117f8ca2c1	no	5
Warnings:					
Information:					
This is not an USPTO supplied ADS fillable form					
3		066749-2584_Application.pdf	230952 eaed6bc34ed31540655f6ac8263cf5995c8c9493	yes	42

	Multipart Description/PDF files in .zip description		
	Document Description	**Start**	**End**
	Specification	1	37
	Claims	38	41
	Abstract	42	42

Warnings:					
Information:					
4	Drawings-only black and white line drawings	066749-2584_Drawings.pdf	3578329 f9f3f201856200a75bf395dea682c5201ce8dcae	no	48
Warnings:					
Information:					

5	Oath or Declaration filed	066749-2584_Declaration.pdf	521863 5badca3fe3f852b49f168ea6fbcb0e3207b9b478	no	7
Warnings:					
Information:					
6	Power of Attorney	066749-2584_PoA.pdf	200074 5a67af617903ae4774c59bc8efd16a6d7bfaa98f	no	2
Warnings:					
Information:					
7	Transmittal Letter	066749-2584_IDS_Transmittal.pdf	82070 8a97328e1b2b7429ea2888dc5524c6441ec466c5	no	3
Warnings:					
Information:					
8	Information Disclosure Statement (IDS) Form (SB08)	066749-2584_SB08.pdf	203135 e4f684cfb93d7f473edb1a1ae21ec336af999d68	no	10
Warnings:					
Information:					
This is not an USPTO supplied IDS fillable form					
9	Fee Worksheet (SB06)	fee-info.pdf	35502 d81ddab9291471deff883fae26fb5c46af2f200f	no	2
Warnings:					
Information:					
			Total Files Size (in bytes):	5000615	

This Acknowledgement Receipt evidences receipt on the noted date by the USPTO of the indicated documents, characterized by the applicant, and including page counts, where applicable. It serves as evidence of receipt similar to a Post Card, as described in MPEP 503.

New Applications Under 35 U.S.C. 111
If a new application is being filed and the application includes the necessary components for a filing date (see 37 CFR 1.53(b)-(d) and MPEP 506), a Filing Receipt (37 CFR 1.54) will be issued in due course and the date shown on this Acknowledgement Receipt will establish the filing date of the application.
National Stage of an International Application under 35 U.S.C. 371
If a timely submission to enter the national stage of an international application is compliant with the conditions of 35 U.S.C. 371 and other applicable requirements a Form PCT/DO/EO/903 indicating acceptance of the application as a national stage submission under 35 U.S.C. 371 will be issued in addition to the Filing Receipt, in due course.
New International Application Filed with the USPTO as a Receiving Office
If a new international application is being filed and the international application includes the necessary components for an international filing date (see PCT Article 11 and MPEP 1810), a Notification of the International Application Number and of the International Filing Date (Form PCT/RO/105) will be issued in due course, subject to prescriptions concerning national security, and the date shown on this Acknowledgement Receipt will establish the international filing date of the application.

Doc Code: PA..
Document Description: Power of Attorney

PTO/AIA/82A (07-13)
Approved for use through 11/30/2014. OMB 0651-0051
U.S. Patent and Trademark Office; U.S. DEPARTMENT OF COMMERCE
Under the Paperwork Reduction Act of 1995, no persons are required to respond to a collection of information unless it displays a valid OMB control number.

TRANSMITTAL FOR POWER OF ATTORNEY TO ONE OR MORE REGISTERED PRACTITIONERS

NOTE: This form is to be submitted with the Power of Attorney by Applicant form (PTO/AIA/82B) to identify the application to which the Power of Attorney is directed, in accordance with 37 CFR 1.5, unless the application number and filing date are identified in the Power of Attorney by Applicant form. If neither form PTO/AIA/82A nor form PTO/AIA82B identifies the application to which the Power of Attorney is directed, the Power of Attorney will not be recognized in the application.

Application Number	To be determined
Filing Date	January 24, 2020
First Named Inventor	Yaron Brunner
Title	Utility Assembly and Coupling Mechanism
Art Unit	To be determined
Examiner Name	To be determined
Attorney Docket Number	066749-2584

SIGNATURE of Applicant or Patent Practitioner

Signature	/Derek H. Campbell/	Date (Optional)	January 24, 2020
Name	Derek H. Campbell	Registration Number	70,608
Title (if Applicant is a juristic entity)	Attorney for Applicant		
Applicant Name (if Applicant is a juristic entity)	Milwaukee Electric Tool Corporation		

NOTE: This form must be signed in accordance with 37 CFR 1.33. See 37 CFR 1.4(d) for signature requirements and certifications. If more than one applicant, use multiple forms.

☑ *Total of 1 forms are submitted.

This collection of information is required by 37 CFR 1.131, 1.32, and 1.33. The information is required to obtain or retain a benefit by the public which is to file (and by the USPTO to process) an application. Confidentiality is governed by 35 U.S.C. 122 and 37 CFR 1.11 and 1.14. This collection is estimated to take 3 minutes to complete, including gathering, preparing, and submitting the completed application form to the USPTO. Time will vary depending upon the individual case. Any comments on the amount of time you require to complete this form and/or suggestions for reducing this burden, should be sent to the Chief Information Officer, U.S. Patent and Trademark Office, U.S. Department of Commerce, P.O. Box 1450, Alexandria, VA 22313-1450. DO NOT SEND FEES OR COMPLETED FORMS TO THIS ADDRESS. **SEND TO: Commissioner for Patents, P.O. Box 1450, Alexandria, VA 22313-1450.**

If you need assistance in completing the form, call 1-800-PTO-9199 and select option 2.

PTO/AIA/80 (07-12)
Approved for use through 11/30/2014. OMB 0651-0035
U.S. Patent and Trademark Office; U.S DEPARTMENT OF COMMERCE
Under the Paperwork Reduction Act of 1995, no persons are required to respond to a collection of information unless it displays a valid OMB control number.

POWER OF ATTORNEY TO PROSECUTE APPLICATIONS BEFORE THE USPTO

I hereby revoke all previous powers of attorney given in the application identified in the attached statement under 37 CFR 3.73(c).

I hereby appoint:

[■] Practitioners associated with Customer Number: 142078

OR

[ ] Practitioner(s) named below (if more than ten patent practitioners are to be named, then a customer number must be used):

Name	Registration Number	Name	Registration Number

As attorney(s) or agent(s) to represent the undersigned before the United States Patent and Trademark Office (USPTO) in connection with any and all patent applications assigned only to the undersigned according to the USPTO assignment records or assignments documents attached to this form in accordance with 37 CFR 3.73(c).

Please change the correspondence address for the application identified in the attached statement under 37 CFR 3.73(c) to:

[■] The address associated with Customer Number: 142078

OR

[ ]

Firm or Individual Name			
Address			
City		State	Zip
Country			
Telephone		Email	

Assignee Name and Address: Milwaukee Electric Tool Corporation
13135 West Lisbon Road
Brookfield, Wisconsin 53002

A copy of this form, together with a statement under 37 CFR 3.73(c) (Form PTO/AIA/96 or equivalent) is required to be Filed in each application in which this form is used. The statement under 37 CFR 3.73(c) may be completed by one of The practitioners appointed in this form, and must identify the application in which this Power of Attorney is to be filed.

SIGNATURE of Assignee of Record

The individual whose signature and title is supplied below is authorized to act on behalf of the assignee

Signature		Date	7-6-16
Name	Ty Staviski	Telephone	262-781-3600
Title	Vice President, Secretary and Treasurere		

This collection of information is required by 37 CFR 1.31, 1.32 and 1.33. The information is required to obtain or retain a benefit by the public which is to file (and by the USPTO to process) an application. Confidentiality is governed by 35 U.S.C. 122 and 37 CFR 1.11 and 1.14. This collection is estimated to take 3 minutes to complete, including gathering, preparing, and submitting the completed application form to the USPTO. Time will vary depending upon the individual case. Any comments on the amount of time you require to complete this form and/or suggestions for reducing this burden, should be sent to the Chief Information Officer, U.S. Patent and Trademark Office, U.S. Department of Commerce, P.O. Box 1450, Alexandria, VA 22313-1450. DO NOT SEND FEES OR COMPLETED FORMS TO THIS ADDRESS. **SEND TO: Commissioner for Patents, P.O. Box 1450, Alexandria, VA 22313-1450.**

If you need assistance in completing the form, call 1-800-PTO-9199 and select option 2.

IN THE UNITED STATES PATENT AND TRADEMARK OFFICE

Applicant: Milwaukee Electric Tool Corporation

Title: Utility Assembly and Coupling Mechanism

Appl. No.: To Be Determined

Filing Date: January 24, 2020

Examiner: To Be Determined

Art Unit: To Be Determined

Confirmation Number: To Be Determined

INFORMATION DISCLOSURE STATEMENT UNDER 37 CFR §1.56

Mail Stop Amendment
Commissioner for Patents
P.O. Box 1450
Alexandria, VA 22313-1450

Submitted herewith on Form PTO/SB/08 is a listing of the documents cited by or submitted to the United States Patent & Trademark Office ("USPTO") in parent application Serial No. 16/216,724, filed December 11, 2018. As provided in 37 CFR §1.98(d), copies of documents previously cited in the above-identified patent application are not being provided since they were previously submitted to the USPTO in the above-identified patent application. Otherwise, copies of each newly cited non-U.S. patent document (if any) and each newly cited non-patent document (if any) are being submitted to comply with the provisions of 37 CFR §1.97 and §1.98.

The submission of any document herewith, which is not a statutory bar, is not intended as an admission that such document constitutes prior art against the claims of the present application or that such document is considered material to patentability as defined in 37 CFR

Milwaukee Electric Tool, Keter Home and Garden Products – Ex. 2003 - Page 1190
Klein Tools v. Milwaukee Electric Tool, Keter Home and Garden Products
IPR2024-01400

§1.56(b). Applicants do not waive any rights to take any action which would be appropriate to antedate or otherwise remove as a competent reference any document which is determined to be a *prima facie* art reference against the claims of the present application.

TIMING OF THE DISCLOSURE

The listed documents are being submitted in compliance with 37 CFR §1.97(b)(1), within three (3) months of the filing date of the application.

RELEVANCE OF EACH DOCUMENT

The relevance of the foreign-language document is shown in the figures of the foreign-language documents and/or are described in the English-language abstract submitted in the parent application, where available. An English translation of the foreign-language document is not readily available. However, the absence of such translation does not relieve the PTO from its duty to consider the submitted foreign language document (37 CFR §1.98 and MPEP §609).

Applicants respectfully request that each listed document be considered by the Examiner and be made of record in the present application and that an initialed copy of Form PTO/SB/08 be returned in accordance with MPEP §609.

Although Applicant believes that no fee is required for this Request, the Commissioner is hereby authorized to charge any additional fees which may be required for this Request to Deposit Account No. 18-0882.

Milwaukee Electric Tool, Keter Home and Garden Products – Ex. 2003 - Page 1191
Klein Tools v. Milwaukee Electric Tool, Keter Home and Garden Products
IPR2024-01400

Respectfully submitted,

Date January 24, 2020

By /Derek H. Campbell/

Reinhart Boerner Van Deuren s.c.
Customer Number: 142078
Telephone: (414) 298-8374
Facsimile: (414) 298-8097

Derek H. Campbell
Attorney for Applicant
Registration No. 70,608

Milwaukee Electric Tool, Keter Home and Garden Products – Ex. 2003 - Page 1192
Klein Tools v. Milwaukee Electric Tool, Keter Home and Garden Products
IPR2024-01400

IN THE UNITED STATES PATENT AND TRADEMARK OFFICE

Applicants: Milwaukee Electric Tool Corporation

Title: Utility Assembly and Coupling Mechanism

Prior Appl. No.: 16/216,724
Prior Appl. Filing Date: December 11, 2018

Examiner: To be determined

Art Unit: To be determined

CONTINUING PATENT APPLICATION TRANSMITTAL LETTER

Commissioner for Patents
P.O. Box 1450
Alexandria, VA 22313-1450

Transmitted herewith for filing under 37 C.F.R. § 1.53(b) is a:

[X] Continuation [ ] Division [ ] Continuation-In-Part (CIP)

of the above-identified copending prior application in which no patenting, abandonment, or termination of proceedings has occurred. Priority to the above-identified prior application is hereby claimed under 35 U.S.C. § 120 for this continuing application. The entire disclosure of the above-identified prior application is considered as being part of the disclosure of the accompanying continuing application and is hereby incorporated by reference therein in its entirety.

Enclosed are:

[**X**] Application Data Sheet (37 CFR 1.76)

[**X**] Cover Page, Description, Claims and Abstract

[**X**] Formal drawings

Milwaukee Electric Tool, Keter Home and Garden Products – Ex. 2003 - Page 1193
Klein Tools v. Milwaukee Electric Tool, Keter Home and Garden Products
IPR2024-01400

[**X**] Copy of Inventor Declaration for parent Application No. 16/216,724, filed December 11, 2018

[**X**] Power of Attorney from Assignee/Applicant

[**X**] Information Disclosure Statement

[**X**] Form PTO/SB/08

The requisite fees are being charged to Deposit Account No. 18-0882.

The Commissioner is hereby authorized to charge any additional fees which may be required regarding this application under 37 C.F.R. §§ 1.16-1.17, or credit any overpayment, to Deposit Account No. 18-0882.

Please direct all correspondence to the undersigned attorney or agent at the address indicated below.

Respectfully submitted,

Date January 24, 2020

By /Derek H. Campbell/

Reinhart Boerner Van Deuren s.c.
Customer Number: 142078
Telephone: (414) 298-8374
Facsimile: (414) 298-8097

Derek H. Campbell
Attorney for Applicant
Registration No. 70,608

Application Data Sheet

Application Information

Application Number:	To Be Determined
Application Type:	Nonprovisional
Subject Matter:	Utility
CD-ROM or CD-R:	None
Computer Readable Form (CRF):	No
Title:	Utility Assembly and Coupling Mechanism
Attorney Docket Number:	066749-2584
Request for Early Publication:	No
Request for Non-Publication:	No
Suggested Drawing Figure:	1A
Total Drawing Sheets:	48
Small Entity:	No
Petition included:	No
Secrecy Order in Parent Appl.:	No

Inventor Information

Status:	Full Capacity
Given Name:	Yaron
Family Name:	Brunner
City of Residence:	Kibbutz Gvat
State or Province of Residence:	
Country of Residence:	IL
Street of mailing address:	Kibbutz Gvat, P.O.B. 248
City of mailing address:	Kibbutz Gvat

Milwaukee Electric Tool, Keter Home and Garden Products – Ex. 2003 - Page 1195
Klein Tools v. Milwaukee Electric Tool, Keter Home and Garden Products
IPR2024-01400

State or Province of mailing address:	
Country of mailing address:	IL
Postal or Zip Code of mailing address:	3657900

Status:	Full Capacity
Given Name:	Grant T.
Family Name:	Squiers
City of Residence:	Cudahy
State or Province of Residence:	Wisconsin
Country of Residence:	US
Street of mailing address:	3745 East Cudahy Avenue
City of mailing address:	Cudahy
State or Province of mailing address:	Wisconsin
Country of mailing address:	US
Postal or Zip Code of mailing address:	53110

Status:	Full Capacity
Given Name:	Christopher S.
Family Name:	Hoppe
City of Residence:	Milwaukee
State or Province of Residence:	Wisconsin
Country of Residence:	US
Street of mailing address:	3126 South Burrell Street
City of mailing address:	Milwaukee
State or Province of mailing address:	Wisconsin

Country of mailing address:	US
Postal or Zip Code of mailing address:	53207

Status:	Full Capacity
Given Name:	Steven W.
Family Name:	Hyma
City of Residence:	Milwaukee
State or Province of Residence:	Wisconsin
Country of Residence:	US
Street of mailing address:	1312 East Warnimont Avenue
City of mailing address:	Milwaukee
State or Province of mailing address:	Wisconsin
Country of mailing address:	US
Postal or Zip Code of mailing address:	53207

Correspondence Information

Correspondence Customer Number:	142078
E-Mail address:	ipadmin@reinhartlaw.com

Representative Information

Representative Customer Number:	142078	

Domestic Priority Information

Application:	Continuity Type:	Prior Application No.:	Parent Filing Date:	Prior Application Status:	Patent No.:
This Application	Is a continuation of	16/216,724	December 11, 2018	Pending	N/A
16/216,724	Is a continuation of	15/826,232	November 29, 2017	Pending	N/A
15/826,232	Is a continuation of	PCT/IL2017/050481	April 30, 2017	Expired	N/A
PCT/IL2017/050481	Claims the benefit under 35 U.S.C. 119(e)	62/459,076	February 15, 2017	Expired	N/A
PCT/IL2017/050481	Claims the benefit under 35 U.S.C. 119(e)	62/330,334	May 2, 2016	Expired	N/A

Foreign Priority Information

Country:	Application number:	Filing Date:	Priority Claimed:

Statement under 37 CFR 1.55 or 1.78 for AIA (First Inventor to File) Transition Applications

Milwaukee Electric Tool, Keter Home and Garden Products – Ex. 2003 - Page 1198
Klein Tools v. Milwaukee Electric Tool, Keter Home and Garden Products
IPR2024-01400

☐ This application (1) claims priority to or the benefit of an application filed before March 16, 2013 and (2) also contains, or contained at any time, a claim to a claimed invention that has an effective filing date on or after March 16, 2013. NOTE: By providing this statement under 37 CFR 1.55 or 1.78, this application, with a filing date on or after March 16, 2013, will be examined under the first inventor to file provisions of the AIA.

Applicant Information

Applicant 1:

[X] Assignee	[ ] Legal Representative under 35 U.S.C. 117	[ ] Person to whom the inventor is obligated to assign	[ ] Person who shows sufficient proprietary interest
If applicant is the legal representative, indicate the authority to file the patent application, the inventor is:			
Name of the Deceased or Legally Incapacitated Inventor:			
If the Assignee is an Organization check here [X]			

Organization Name:	Milwaukee Electric Tool Corporation
13135 West Lisbon Road Brookfield, Wisconsin 53005	

Signature:	/Derek H. Campbell/		Date:	January 24, 2020
First Name:	Derek H.	Last Name:	Campbell	
Registration No.:	70,608			

Atty. Dkt. No. 066749-2584

U.S. PATENT APPLICATION

for

UTILITY ASSEMBLY AND COUPLING MECHANISM

Inventors: Yaron Brunner
Grant T. Squiers
Christopher S. Hoppe
Steven W. Hyma

Milwaukee Electric Tool, Keter Home and Garden Products – Ex. 2003 - Page 1200
Klein Tools v. Milwaukee Electric Tool, Keter Home and Garden Products
IPR2024-01400

UTILITY ASSEMBLY AND COUPLING MECHANISM

CROSS-REFERENCE TO RELATED PATENT APPLICATION

[0001] This application is a continuation of U.S. Application No. 16/216,724, filed December 11, 2018, which is a continuation of U.S. Application No. 15/826,232, filed November 29, 2017, which is a continuation of International Application No. PCT/IL2017/050481, filed April 30, 2017, which claims priority to U.S. Provisional Application No. 62/459,076, filed February 15, 2017 and to U.S. Provisional Application No. 62/330,334, filed May 2, 2016, each of which are incorporated herein by reference in their entireties.

TECHNOLOGICAL FIELD

[0002] The present disclosure is directed to a container assembly and more specifically to a utility assembly comprising two or more detachably attachable utility modules. The disclosure is further concerned with a coupling mechanism facilitating detachably attaching the utility modules to one another.

[0003] The term 'utility module' is used hereinafter in its broad meaning and is meant to denote a variety of articles such as, storage containers, travel luggage, tool boxes, organizers, compacted work benches, cable storage, tools (e.g. hand tools, power generators and power sources), communication modules, carrying platforms, locomotion platforms, etc., of any shape and size, and wherein any utility module can be detachably attached to any other utility module.

[0004] The term 'utility assembly' as used herein denotes any set of utility modules configured for articulation to one another, either as a stationary unit or locomotive.

GENERAL DESCRIPTION

[0005] A first aspect of the disclosure concerns a coupling mechanism configured for readily detachably attaching any first article to any second article, wherein any first article and any second article can be any utility module.

[0006] The coupling mechanism comprises a male coupler at a face of one of the first utility module and the second utility module, and a female coupler at a face of the other one of the first utility module and the second utility module, said female coupler has a depressed locking

Milwaukee Electric Tool, Keter Home and Garden Products – Ex. 2003 - Page 1201
Klein Tools v. Milwaukee Electric Tool, Keter Home and Garden Products
IPR2024-01400

location configured with at least one locking rib extending above a depressed surface and along a sliding path, and having an open edge facing in a first sense; said male coupler has a projecting locking location disposed in register with said depressed locking location and configured with at least one locking tongue extending along said engaging sliding path at a second sense, opposite to said first sense, and configured for arresting engagement at a space between said locking rib and depressed surface, the coupling mechanism further comprises at least one locking member for arresting the first utility module with respect to said second utility module and preventing sliding displacement along said sliding path.

[0007] The arrangement is such that at a locked position of a utility assembly the at least one locking tongue of the male coupler engages below said at least one locking rib of the female coupler and the at least one locking member is engaged, thus preventing any respective displacement between the first utility module and the second utility module, and retaining the coupling mechanism at an engaged and locked position.

[0008] The term 'first utility module' as used herein denotes any utility module bearing at least one second utility module over a first surface thereof. The second utility module of a utility assembly may comprise three or more stages of utility modules, and functions as first utility module with respect to a third stage utility module mounted thereover and serving in turn as a second utility module.

[0009] According to certain embodiments, one or more female couplers are configured at the top face of the first utility module, and one or more male couplers are configured at the bottom face of the second utility module

[0010] The disclosed subject-matter is directed to a utility module configured with at least one of a male coupling mechanism and a female coupling mechanism of the disclosure, a module assembly comprising one or more utility modules of the aforementioned type and a set of utility modules of the aforementioned type.

[0011] According to a configuration of the first aspect, there is provide a utility assembly comprising at least a first utility module and at least a second utility module, and comprising a coupling mechanism configured between the first utility module and the second utility module;

Milwaukee Electric Tool, Keter Home and Garden Products – Ex. 2003 - Page 1202
Klein Tools v. Milwaukee Electric Tool, Keter Home and Garden Products
IPR2024-01400

said coupling mechanism comprising at one of a top face of the first utility module and a bottom face of the second utility module one or more depressed locking locations each configured with a locking rib, and at least one locking latch arresting location; and the other one of said top face of the first utility module and a bottom face of the second utility module comprises one or more projecting portions each configured with a locking tongue disposed in register with said one or more depressed locking locations, and at least one locking latch disposed in register with said at least one locking latch arresting location.

[0012] The arrangement is such that, at a locked position, the bottom face of the second utility module at least partially rests over the top face of the first utility module, and the one or more projecting tongues are arrested by the corresponding one or more locking ribs, and the at least one locking latch is arrested by corresponding at least one locking latch arresting location, thereby preventing sliding displacement between the first utility module and the second utility module, and further wherein disengaging the second utility module from the first utility module is facilitated by disengaging the at least one locking latch from the at least one locking latch arresting location.

[0013] Locking engagement between the second utility module and the first utility module is obtained when the one or more depressed locking locations and the one or more projecting portions are disposed behind one another (though not necessarily aligned).

[0014] According to a particular configuration of the coupling mechanism, the one or more depressed locking locations and the one or more locking latch arresting locations are configured at the top face of the first utility module, and the one or more projecting portions and the at least one locking latch are configured at the bottom face of the second utility module. According to this configuration, locking between the first utility module and the second utility module is obtained by positioning the second utility module over the second utility module such that one or more locking tongues of the projecting portions engages with one or more respective locking ribs of the depressed locking locations, and wherein the locking latch interlocks with the respective locking latch arresting location.

[0015] The arrangement being such that the attaching engagement between the second utility module and the first utility module takes place when the one or more locking tongues and the

Milwaukee Electric Tool, Keter Home and Garden Products – Ex. 2003 - Page 1203
Klein Tools v. Milwaukee Electric Tool, Keter Home and Garden Products
IPR2024-01400

corresponding one or more respective locking ribs are engaged, thereby preventing vertical separation between the utility modules (i.e. preventing lifting of the second utility module of the first utility module), and further when the locking latch is arrested by the respective locking latch arresting location, thereby preventing sliding displacement of the utility modules one with respect to the other (i.e. sliding displacement of the second module over the first module).

[0016] Disengaging the second utility module from the first utility module can be facilitated only after disengaging the locking latch from said locking latch arresting location.

[0017] According to a second aspect of the disclosure there is disclosed a coupling mechanism for a utility assembly comprising at least a first utility module and at least a second utility module, said coupling mechanism is configured between the first utility module and the second utility module and comprises at one of a top face of the first utility module and a bottom face of the second utility module with at least one depressed locking location configured with a locking rib, and at least one locking latch arresting location; and the other one of said top face of the first utility module and a bottom face of the second utility module comprises at least one projecting portion with a locking tongue disposed in register with said at least one depressed locking location, and at least one locking latch disposed in register with said at least one locking latch arresting location; and wherein at a locked position the bottom face at least partially rests over the top face, and the at least one projecting tongue is arrested by the corresponding at least one locking rib and the at least one locking latch is arrested by corresponding at least one locking latch arresting location, and further wherein disengaging the second utility module from the first utility module is facilitated by disengaging the at least one locking latch from the at least one locking latch arresting location.

[0018] Engaging the first and second utility modules into the locked position is provided by sliding the second utility module with respect to the first utility module along a sliding path defined by at least one of said at least one locking rib and said at least one locking tongue.

[0019] According to one particular configuration the at least one locking rib extends substantially parallel to the sliding path and according to another configuration the at least one locking rib extends substantially perpendicular and intersects the sliding path. A third aspect of the present disclosure is directed to a utility module being a mobile carrier unit and comprising at

Milwaukee Electric Tool, Keter Home and Garden Products – Ex. 2003 - Page 1204
Klein Tools v. Milwaukee Electric Tool, Keter Home and Garden Products
IPR2024-01400

least one carrier engagement surface, compatible for interlocking engagement in a detachable manner with a first engagement surface of a utility module.

[0020] The term carrier unit as used herein denotes any kind of propelled cart configured for detachably attaching and carrying load. The carrier unit may be a hand cart, a mobile tool cart, a mobile workshop, traveling luggage cart, a trolley, etc.

[0021] With particular reference to the third aspect, the carrier engagement surface can be larger than the utility module's first engagement surface corresponding with it. In this case, several utility modules may be interlocked simultaneously upon one carrier unit. According to one configuration there is disclosed a carrier unit comprising a manipulating arrangement, a locomotion system, and an engagement surface comprising one or more engaging elements. The carrier unit is designated for detachable interlocking engagement with one or more utility modules, each comprising a first engagement surface configured with one or more first engaging elements compatible for detachable interlocking engagement with the carrier engaging elements.

[0022] According to yet configuration there is disclosed an assembly comprising a carrier unit comprising an engagement surface comprising one or more engaging elements, and at least one utility module configured with at least one first engagement surface comprising one or more first engaging elements compatible for detachable interlocking engagement with the carrier unit's engaging elements.

[0023] According to a modification of this aspect, there is also provided a container unit comprising a top member configured with a second engagement surface of the utility module, said top member, according to one example constitutes a cover of the utility module.

[0024] The arrangement is such that a container unit can be readily and easily applied over and interlockingly articulated to a carrier unit, or over a utility module configured with a second engagement surface mimicking the first engagement surface second engagement surface mimicking the first engagement surface of the carrier unit.

[0025] Engagement between the carrier unit and the container, and further between two containers, is facilitated by any locking mechanism of the disclosure hereinabove and hereinafter.

Milwaukee Electric Tool, Keter Home and Garden Products – Ex. 2003 - Page 1205
Klein Tools v. Milwaukee Electric Tool, Keter Home and Garden Products
IPR2024-01400

[0026] According to a specific example, there is a latching mechanism, wherein the first engaging elements of the carrier unit are configured for interlocking engagement with engaging elements of the mating surface of the respective utility module. The latching mechanism may assume various configurations, e.g. male-female couplings, dovetail couplings, and the like. The arrangement being such that only a minor displacement is required in order to lockingly mount, and respectively detach, a utility module over the carrier unit.

[0027] According to one specific configuration, the detachable interlocking engagement mechanism between the carrier engaging elements and the utility module's first engaging elements is a dovetail engagement mechanism, comprising laterally projecting shoulders configured on one of the carrier engagement surfaces and the first engagement surface of a utility module, and a shoulder receiving recess configured on the other one of one of the carrier engagement surfaces and the first engagement surface of a utility module; where said laterally projecting shoulders are configured for sliding engagement with said shoulder receiving recess.

[0028] According to a particular configuration, one or both of the carrier engagement surfaces and the first engagement surface of a respective utility module are configured with depressions, each accommodating respective laterally projecting locking shoulders. Said dovetail engagement mechanism members constitute said engaging elements, wherein said carrier engaging elements comprise one of said dovetail engagement members, while the utility module's first engaging element comprises the respective said dovetail engagement member.

[0029] According to another configuration, the detachable interlocking engagement mechanism between the carrier engaging elements and the utility module's first engaging elements is an undercut engagement mechanism, comprising lateral projections configured on one of the carrier engagement surfaces and the first engagement surface of a container unit, and a receiving recess configured on the other one of one of the carrier engagement surfaces and the first engagement surface of a utility module; where said lateral projections are configured for engagement with said receiving recess.

[0030] Interlocking engagement of the utility module and the carrier unit takes place by placing the first engagement surface of a utility module over the carrier engagement surface, such that the utility module's first engaging elements are disposed shifted over the respective

Milwaukee Electric Tool, Keter Home and Garden Products – Ex. 2003 - Page 1206
Klein Tools v. Milwaukee Electric Tool, Keter Home and Garden Products
IPR2024-01400

carrier engaging elements of the carrier unit, and are then slidingly shifted to obtain sliding interlocking engagement therebetween.

[0031] The detachable interlocking engagement mechanism may further comprise a locking mechanism configured for preventing unintentional detaching of the slidingly engaging elements once they are fully interlocked, i.e. to prevent detaching of the utility module from the carrier unit or from another utility module.

[0032] According to one configuration, the locking mechanism, comprises a locking pin that is configured for snapingly protruding from one of the engagement surfaces into a designated nook on the other engagement surface. This prevents the engaging surfaces from sliding relatively to each other, and by that it prevents said engaging elements from being slidingly separated once interlocked.

[0033] According to one configuration, the carrier engagement surface of the carrier unit constitutes a top wall of the carrier unit, when the carrier unit is balanced horizontally to the ground, and wherein the utility module's first engagement surface constitutes a bottom wall of the container unit, when the utility module is balanced horizontally to the ground. The utility module can further comprise a second engagement surface constituting its top wall, or a cover, when the utility module is balanced horizontally to the ground. The second engagement surface of the utility module simulates the carrier engagement surface as it is compatible for engaging with another utility module's first engagement surface.

[0034] Any one or more of the following features, designs and configurations, can be implemented in a utility module, a utility assembly, locking mechanism, and the carrier unit and assembly according to the present disclosure, individually or in various combinations thereof:

[0035] A single locking rib can extend at rear end of a depressed locking location (i.e. the female coupler may comprise a single locking rib) and substantially perpendicular to the sliding path;

[0036] Two locking ribs can extend at side edges of a depressed locking location (i.e. the female coupler may comprise two locking ribs) and disposed substantially parallel to the sliding path;

Milwaukee Electric Tool, Keter Home and Garden Products – Ex. 2003 - Page 1207
Klein Tools v. Milwaukee Electric Tool, Keter Home and Garden Products
IPR2024-01400

[0037] Two locking ribs can each extend at a respective side edge of two neighboring depressed locking locations, said locking ribs disposed substantially parallel to the sliding path;

[0038] The utility assembly can be modular wherein a top face of a first utility module can interlock with a bottom face of a second utility module disposed thereover in a substantially fully overlapping relation, or with a bottom face of at least one second utility module only partially overlapping therewith;

[0039] A second utility module overlapping a significant portion of a first utility module can be configured with a single release latch for displacing several locking latches articulated therewith;

[0040] Two or more second utility modules can be mounted over a first utility module, each being independently detachable attachable over the first utility module;

[0041] The at least one second utility module is configured for snap-type locking over the first utility module;

[0042] A release latch for displacing the locking latch into disengagement from the locking latch arresting location can be disposed at a front face of the respective second utility module;

[0043] The at least one locking latch and the at least one locking latch arresting location can be disposed at a front portion of the respective utility modules;

[0044] At least one of the first utility module and the second utility module are configured with a gliding surface facilitating displacement and positioning the respective second utility module at the locking position with respect to the first utility module;

[0045] The gliding surface reduces tolerances between the projecting portion and the depressed locking location receiving same;

[0046] One or both of the locking tongue and locking rib can be configured with a slanting surface at corresponding orientation, along the sliding path, for reducing or substantially elimination tolerance therebetween;

[0047] One or both of a front edge of the projecting portion and a corresponding front edge of the depressed locking location can be slanted for gliding positioning of the second utility module into true locking position over the first utility module;

[0048] The locking latch can be configured for displacement in a direction substantially normal to a respective face of a utility module;

[0049] The locking latch can be spring biased and configured for normally projecting from a face of the respective first or second utility module;

[0050] The locking latch can be manipulable to be opened through an opening configured at a front wall of the respective utility module;

[0051] Corners of the utility modules can be reinforced;

[0052] One or more of the utility modules can be a container module, and the utility assembly can be a container assembly/tool caddy;

[0053] The container module can be compartmented and can be configured with sub-containers and sub-compartments;

[0054] The top face of the container module can be configured as a lid or as a functional component of the container module;

[0055] A lid of a second container can be opened also when articulated and locked in position over a first container;

[0056] A lid of a first container can be opened also when a second container is articulated and locked in position thereabove;

[0057] At least one of the container modules can be a locomoting container and can be configured with an arrangement for locomoting said container module. Where the locomoting container is attached to other container modules it can facilitate for locomoting the utility assembly;

Milwaukee Electric Tool, Keter Home and Garden Products – Ex. 2003 - Page 1209
Klein Tools v. Milwaukee Electric Tool, Keter Home and Garden Products
IPR2024-01400

[0058] The container modules can be configured with carrying arrangement disposed at any one or more of its faces. According to a particular configuration, a front face of the container modules is configured with a carrying handle and according to another configuration side faces of the container modules can be configured with a carrying handle;

[0059] Examples of utility modules can be any one or more of a cooler box, a workpiece grip, a power supply (e.g. power bank, generator), hand tools, power tools, a locomotive platform (e.g. a work dolly), powered or not, a tactical unit (e.g. military gear, scientific equipment, communications equipment, personal gear, outdoor gear, etc.);

[0060] A tool caddy can be configured with a carrying handle (e.g. telescopic);

[0061] A utility module can be a soft-shell container with at least a rigid face portion configured with a male/female coupler;

[0062] The utility module can be an interface coupling module, i.e. functions only as a coupling interface;

[0063] The interface coupling module can be attached to a surface of any element or object and by different arrangements, fixedly or detachably;

[0064] The interface coupling module can be a cargo interface module for a utility vehicle, so as to attach one or more utility modules to the vehicle;

[0065] The cargo interface module can be a bed cargo module, a roof rack module, etc.;

[0066] The interface coupling module can be a surface mount for attaching utility modules, e.g. a floor mount, wall mount, wall rack, etc.;

[0067] The interface coupling module can be a tool mount/rack;

[0068] The interface coupling module can be belt mount for mounting of utility modules (e.g. a hand tool) to a workers belt;

[0069] The interface coupling module can be an interface mount module for coupling two utility modules to one another, e.g. for articulating two utility modules, both configured with a

Milwaukee Electric Tool, Keter Home and Garden Products – Ex. 2003 - Page 1210
Klein Tools v. Milwaukee Electric Tool, Keter Home and Garden Products
IPR2024-01400

similar male coupler or a female coupler, and wherein the interface mount module is configured at both faces with another of male coupler or a female coupler;

[0070] The interface coupling module can be a back pack carrying module, for facilitating attachment and carrying of utility modules;

[0071] A top face of a utility module can be configured with a carrying handle, said carrying handle displaceable between a stowed position and a carrying position, wherein at the stowed position said carrying handle at least partially extends within a niche and does not to interfere with the coupling mechanism;

[0072] The carrier unit may include one or more auxiliary engagement surfaces positioned on an exterior face of the carrier unit. For example, an auxiliary engagement surface can be configured at a bottom face of the carrier unit;

[0073] The carrier unit may include a second engagement surface simulating/mimicking the first engagement surface of the utility module;

[0074] A utility module may be configured with one or more auxiliary first and second engagement surfaces;

[0075] The carrier engagement surface may be a connectivity platform detachably attached to the exterior surface of the carrier unit, facilitating a cart unit or a carrier unit according to the present disclosure;

[0076] One or both of the utility module's first and second engagement surfaces may be detachably attached to an exterior surface of the utility module;

[0077] The carrier engagement surface and the utility module's first engagement surface may be like elements;

[0078] The utility module's first and second engagement surfaces may be like elements;

[0079] The carrier unit's engaging elements and the utility module's first engaging elements may be similar elements;

Milwaukee Electric Tool, Keter Home and Garden Products – Ex. 2003 - Page 1211
Klein Tools v. Milwaukee Electric Tool, Keter Home and Garden Products
IPR2024-01400

[0080] One engagement surface may include several engaging elements and one locking mechanism;

[0081] The coupling mechanism is configured for spontaneous displacement into locking engagement within a locking receptacle, wherein manual interference is required only for unlocking the locking mechanism and detaching a utility module from a respective utility module or carrier unit;

[0082] The coupling mechanism can be a spring biased locking pin, normally projecting from a respective engagement surface;

[0083] One or both of the carrier unit and the utility module may further include a locking mechanism designated to prevent unintentional separation of the engagement surfaces while they are interlocked;

[0084] The locking mechanism is manipulable between an unlocked position in which said engagement surfaces may slide upon each other, and a locked state in which the engagement surfaces may not slide upon each other;

[0085] The locking mechanism may be configured with a biasing mechanism for snap arresting at least at its locked state;

[0086] The locking mechanism may be configured with a manually operated activating portion for switching between said unlocked and locked positions.

[0087] The carrier unit may be assembled together with other carrier units the same way it's assembled with the utility modules;

[0088] The locomotion system of the carrier unit may comprise a wheel system (e.g. axially fixed roller wheels, swivel wheels, etc.), a sliding platform, caterpillar tracks, etc;

[0089] The locomotion system of the carrier unit comprises, according to a particular example, several fixed axis wheels, wherein the perimeter of said wheels is tangent with a base edge of the carrier unit;

[0090] At an assembled configuration, where one or more utility modules are attached to the carrier unit, the assembly can be positioned vertically wherein a side face of the one or more containers rest over a supporting surface. According to a particular example, at this position the carrier unit and container assembly are configured with stability members for retaining their stability while positioned vertically to the ground;

[0091] The carrier unit may be stable while positioned horizontally to the ground, by a support system projecting from a bottom face thereof. The support system may comprise friction enhancing surfaces to restrict displacement of the assembly while placed over a bearing surface;

[0092] The carrier unit may be foldable to a more compact configuration;

[0093] The carrier unit may comprise an external storage box detachably interconnectable to its exterior walls;

[0094] The carrier unit may comprise a power supply detachably interconnectable to its exterior walls;

[0095] The carrier unit's transporting system may be motorized while powered via said power supply;

[0096] The carrier unit may further include a locking mechanism to insure interlocking connection of the engagement surfaces;

[0097] The container unit may comprise non-rigid portions;

[0098] The carrier unit may comprise at least one manipulating arrangement, configurable between a stowed position in which the manipulating arrangement is retracted, and a manipulating position in which the manipulating arrangement is extracted. The manipulating arrangement may be a telescopic or foldable handle;

[0099] The manipulating arrangement may be a gripping handle, a D-grip handle, a T-grip handle, a flexible strap, etc.

Milwaukee Electric Tool, Keter Home and Garden Products – Ex. 2003 - Page 1213
Klein Tools v. Milwaukee Electric Tool, Keter Home and Garden Products
IPR2024-01400

EMBODIMENTS

[00100] The present disclosure also encompasses embodiment as defined in the following numbered phrases. It should be noted that these numbered embodiments intended to add to this disclosure and is not intended in any way to be limiting.

[00101] 1. A coupling mechanism configured for readily detachably attaching a first utility module to a second utility module, the coupling mechanism comprising a male coupler at a face of one of the first utility module and the second utility module, and a female coupler at a face of the other one of the first utility module and the second utility module, said female coupler having a depressed locking location configured with at least one locking rib extending above a depressed surface and along a sliding path, and having an open edge facing in a first sense; said male coupler having a projecting locking location disposed in register with said depressed locking location and configured with at least one locking tongue extending along said engaging sliding path at a second sense, opposite to said first sense, and configured for arresting engagement at a space between said locking rib and depressed surface, the coupling mechanism further comprises at least one locking member for arresting the first utility module with respect to said second utility module and preventing sliding displacement along said sliding path.

[00102] 2. The coupling mechanism of embodiment 1, wherein said female coupler is configured at the top face of the first utility module, and the male coupler is configured at the bottom face of the second utility module.

[00103] 3. The coupling arrangement of embodiment 1 or 2, wherein the at least one locking rib extends substantially parallel to the sliding path.

[00104] 4. The coupling arrangement of embodiment 1 or 2, wherein the at least one locking rib extends substantially perpendicular and intersects the sliding path.

[00105] 5. The coupling arrangement of embodiment 1 or 2, wherein the female coupler comprises a single locking rib extends at rear end of a depressed locking location and substantially perpendicular to the sliding path.

Milwaukee Electric Tool, Keter Home and Garden Products – Ex. 2003 - Page 1214
Klein Tools v. Milwaukee Electric Tool, Keter Home and Garden Products
IPR2024-01400

[00106] 6. The coupling arrangement of embodiment 1 or 2, wherein the female coupler comprises two locking ribs extend at side edges of a depressed locking location and disposed substantially parallel to the sliding path.

[00107] 7. The coupling arrangement of embodiment 1 or 2, wherein the female coupler comprises two locking ribs each extend at a respective side edge of two neighboring depressed locking locations, said locking ribs disposed substantially parallel to the sliding path.

[00108] 8. A coupling mechanism for a utility assembly that comprises at least a first utility module and at least a second utility module, said coupling mechanism is configured between the first utility module and the second utility module; one of a top face of the first utility module and a bottom face of the second utility module comprises at least one depressed locking location configured with a locking rib, and at least one locking latch arresting location; and the other one of said top face of the first utility module and a bottom face of the second utility module comprises at least one projecting portion with a locking tongue disposed in register with said at least one depressed locking location, and at least one locking latch disposed in register with said at least one locking latch arresting location; and wherein at a locked position the bottom face at least partially rests over the top face, and the at least one projecting tongue is arrested by the corresponding at least one locking rib and the at least one locking latch is arrested by corresponding at least one locking latch arresting location, and further wherein disengaging the second utility module from the first utility module is facilitated by disengaging the at least one locking latch from the at least one locking latch arresting location, such that engaging the first and second utility modules into the locked position is provided by sliding the second utility module with respect to the first utility module along a sliding path defined by at least one of said at least one locking rib and said at least one locking tongue.

[00109] 9. The coupling arrangement of embodiment 8, wherein the at least one locking rib extends substantially parallel to the sliding path.

[00110] 10. The coupling arrangement of embodiment 8, wherein the at least one locking rib extends substantially perpendicular and intersects the sliding path.

Milwaukee Electric Tool, Keter Home and Garden Products – Ex. 2003 - Page 1215
Klein Tools v. Milwaukee Electric Tool, Keter Home and Garden Products
IPR2024-01400

[00111] 11. The coupling arrangement of embodiment 8, wherein a single locking rib extends at rear end of a depressed locking location and substantially perpendicular to the sliding path.

[00112] 12. The coupling arrangement of embodiment 8, wherein two locking ribs extend at side edges of a depressed locking location and disposed substantially parallel to the sliding path.

[00113] 13. The coupling arrangement of embodiment 8, wherein two locking ribs each extend at a respective side edge of two neighboring depressed locking locations, said locking ribs disposed substantially parallel to the sliding path.

[00114] 14. The coupling arrangement of any one of embodiments 8 to 13, further comprising a release latch for displacing the locking latch into disengagement from the locking latch arresting location can be disposed at a front face of the respective second utility module.

[00115] 15. The coupling arrangement of any one of embodiments 8 to 14, wherein the at least one locking latch and the at least one locking latch arresting location are disposed at a front portion of the respective utility modules.

[00116] 16. The coupling arrangement of any one of embodiments 8 to 15, wherein the locking latch is configured for displacement in a direction substantially normal to a respective face of a utility module.

[00117] 17. The coupling arrangement of any one of embodiments 8 to 16, wherein locking latch is spring biased and configured for normally projecting from a face of the respective first or second utility module.

[00118] 18. The coupling arrangement of any one of embodiments 8 to 17, wherein the locking latch is manipulable to be opened through an opening configured at a front wall of the respective utility module.

[00119] 19. The coupling arrangement of any one of embodiments 1 to 18, wherein one or both of the locking tongue and locking rib are configured with a slanting surface at corresponding orientation along the sliding path.

[00120] 20. The coupling arrangement of any one of embodiments 1 to 19, wherein one or both of a front edge of the projecting portion (or the projecting locking location) and a corresponding front edge of the depressed locking location are slanted for gliding positioning of the second utility module into locking position over the first utility module.

[00121] 21. The coupling mechanism of any one of embodiments 1 to 20, wherein the first utility module is configured for detachably attaching one or more second utility modules thereto.

[00122] 22. A coupling mechanism for a utility assembly comprising at least a first utility module and at least a second utility module, said coupling mechanism is configured between the first utility module and the second utility module and comprises at one of a top face of the first utility module and a bottom face of the second utility module with at least one depressed locking location configured with a locking rib, and at least one locking latch arresting location; and the other one of said top face of the first utility module and a bottom face of the second utility module comprises at least one projecting portion with a locking tongue disposed in register with said at least one depressed locking location, and at least one locking latch disposed in register with said at least one locking latch arresting location; and wherein at a locked position the bottom face at least partially rests over the top face, and the at least one projecting tongue is arrested by the corresponding at least one locking rib and the at least one locking latch is arrested by corresponding at least one locking latch arresting location, and further wherein disengaging the second utility module from the first utility module is facilitated by disengaging the at least one locking latch from the at least one locking latch arresting location.

[00123] 23. A utility assembly comprising at least a first utility module and at least a second utility module, and comprising a coupling mechanism according to any one of embodiments 1 to 21, the coupling mechanism being configured between the first utility module and the second utility module.

[00124] 24. A utility assembly comprising at least a first utility module and at least a second utility module, and comprising a coupling mechanism for readily detachably attaching the first and second utility modules, the coupling mechanism being configured between the first utility module and the second utility module; said coupling mechanism comprising at one of a top face of the first utility module and a bottom face of the second utility module one or more depressed

Milwaukee Electric Tool, Keter Home and Garden Products – Ex. 2003 - Page 1217
Klein Tools v. Milwaukee Electric Tool, Keter Home and Garden Products
IPR2024-01400

locking locations each configured with a locking rib, and at least one locking latch arresting location; and the other one of said top face of the first utility module and a bottom face of the second utility module comprises one or more projecting portions each configured with a locking tongue disposed in register with said one or more depressed locking locations, and at least one locking latch disposed in register with said at least one locking latch arresting location; such that at a locked position, the bottom face of the second utility module at least partially rests over the top face of the first utility module, and the one or more projecting tongues are arrested by the corresponding one or more locking ribs, and the at least one locking latch is arrested by corresponding at least one locking latch arresting location, thereby preventing sliding displacement between the first utility module and the second utility module, and disengaging the second utility module from the first utility module is facilitated by disengaging the at least one locking latch from the at least one locking latch arresting location.

[00125] 25. The utility assembly of embodiment 24, wherein the first and second utility modules are in a locking engagement when said one or more depressed locking locations and the one or more projecting portions are disposed behind one another.

[00126] 26. The utility assembly of embodiment 24 or 25, wherein said one or more depressed locking locations and said one or more locking latch arresting locations are configured at the top face of the first utility module, and the one or more projecting portions and the at least one locking latch are configured at the bottom face of the second utility module.

[00127] 27. The utility assembly of any one of embodiments 24 to 26, wherein at least one second utility module is configured for snap-type locking over the first utility module.

[00128] 28. The utility assembly of any one of embodiments 24 to 27 wherein engaging the first and second utility modules into the locked position is provided by sliding the second utility module with respect to the first utility module along a sliding path defined by at least one of said at least one locking rib and said at least one locking tongue.

[00129] 29. The utility assembly of any one of embodiments 24 to 28, wherein the at least one locking rib extends substantially parallel to the sliding path.

Milwaukee Electric Tool, Keter Home and Garden Products – Ex. 2003 - Page 1218
Klein Tools v. Milwaukee Electric Tool, Keter Home and Garden Products
IPR2024-01400

[00130] 30. The utility assembly of embodiment 29, wherein the at least one locking rib extends substantially perpendicular and intersects the sliding path.

[00131] 31. The utility assembly of embodiment 29, wherein a single locking rib extends at rear end of a depressed locking location and substantially perpendicular to the sliding path.

[00132] 32. The utility assembly of embodiment 29 wherein two locking ribs extend at side edges of a depressed locking location and disposed substantially parallel to the sliding path.

[00133] 33. The utility assembly of embodiment 29, wherein two locking ribs each extend at a respective side edge of two neighboring depressed locking locations, said locking ribs disposed substantially parallel to the sliding path.

[00134] 34. The utility assembly of any one of embodiments 24 to 33, wherein a top face of a first utility module interlocks with a bottom face of a second utility module disposed thereover in a substantially fully overlapping relation, or with a bottom face of at least one second utility module only partially overlapping therewith.

[00135] 35. The utility assembly of any one of embodiments 24 to 33, wherein the second utility module overlaps a significant portion of a first utility module and is configured with a single release latch for displacing several locking latches articulated therewith.

[00136] 36. The utility assembly of any one of embodiments 24 to 35, further comprising a release latch for displacing the locking latch into disengagement from the locking latch arresting location can be disposed at a front face of the respective second utility module.

[00137] 37. The utility assembly of any one of embodiments 24 to 36, wherein the locking latch is configured for displacement in a direction substantially normal to a respective face of a utility module.

[00138] 38. The utility assembly of any one of embodiments 24 to 37, wherein the locking latch is spring biased and configured for normally projecting from a face of the respective first or second utility module.

[00139] 39. The utility assembly of any one of embodiments 24 to 38, wherein two or more second utility modules can be mounted over a first utility module, each being independently detachable attachable over the first utility module.

[00140] 40. The utility assembly of any one of embodiments 24 to 39, wherein at least one of the first utility module and the second utility module are configured with a gliding surface facilitating displacement and positioning the respective second utility module at the locking position with respect to the first utility module.

[00141] 41. The utility assembly of any one of embodiments 24 to 40, wherein one or more of the utility modules is a container module, and the utility assembly is a container assembly or a tool caddy.

[00142] 42. The utility assembly of embodiment 41, wherein the container module is compartmented and optionally configured with sub-containers and sub-compartments.

[00143] 43. The utility assembly of embodiment 41 or 42, wherein a top face of the container module is configured as a lid or as a functional component of the container module.

[00144] 44. The utility assembly of any one of embodiments 41 to 43, wherein the container modules is a locomoting container, configured with an arrangement for locomoting said utility assembly.

[00145] 45. The utility assembly of any one of embodiments 41 to 44, wherein the container modules is configured with a carrying arrangement disposed at any one or more of its faces, optionally being a carrying handle.

[00146] 46. The utility assembly of any one of embodiments 24 to 40, wherein one or more of the utility modules is a soft-shell container with at least a rigid face portion.

[00147] 47. The utility assembly of any one of embodiments 24 to 40, wherein said first utility module is a mobile carrier unit.

[00148] 48. The utility assembly of any one of embodiments 24 to 47, further comprising a locking mechanism for preventing unintentional separation of the modules while they are interlocked.

[00149] 49. The utility assembly of any one of embodiments 24 to 48, wherein the first utility module is configured for detachably attaching at least two second utility modules thereto.

[00150] 50. A mobile carrier unit comprising at least one carrier engagement surface, compatible for interlocking engagement in a detachable manner with a first engagement surface of a utility module, said carrier engagement surface having (i) one or more depressed locking locations each configured with a locking rib and at least one locking latch arresting location, configured for engagement with said first engagement surface of a utility module that comprises at least one locking latch and one or more projecting portions, each projecting portion being configured with a locking tongue, or (ii) at least one locking latch and one or more projecting portions each configured with a locking tongue for engagement with said first engagement surface of a utility module that comprises one or more depressed locking locations, each depressed locking locations configured with a locking rib and at least one locking latch arresting location.

[00151] 51. The mobile carrier unit of embodiment 50, wherein once associated with the utility module, said locking tongue becomes disposed in register with said one or more depressed locking locations, and at least one locking latch become disposed in register with said at least one locking latch arresting location.

[00152] 52. The mobile carrier unit of embodiment 50 or 51, configured for detachable interlocking engagement with one or more utility modules, each utility module comprising a first engagement surface.

[00153] 53. The mobile carrier unit of any one of embodiments 50 to 52, further comprising at least one of a manipulating arrangement and a locomotion system.

[00154] 54. An assembly comprising a mobile carrier unit of any one of embodiments 50 to 53 having at least one carrier engagement surface, and at a least one utility module having a first

Milwaukee Electric Tool, Keter Home and Garden Products – Ex. 2003 - Page 1221
Klein Tools v. Milwaukee Electric Tool, Keter Home and Garden Products
IPR2024-01400

engagement surface, the utility module being detachably interlocked with the mobile carrier unit by engaging said first engagement surface with said carrier engagement surface.

[00155] 55. The assembly of embodiment 54, wherein the mobile carrier unit and the at least one utility module are detachably interlocked with one another by a dovetail engagement mechanism, that comprises laterally projecting shoulders configured on one of the carrier engagement surfaces and the first engagement surface of a utility module, and a shoulder receiving recess configured on the other one of one of the carrier engagement surfaces and the first engagement surface of a utility module; where said laterally projecting shoulders are configured for sliding engagement with said shoulder receiving recess.

[00156] 56. The assembly of embodiment 55, wherein one or both of the carrier engagement surfaces and the first engagement surface of a respective utility module are configured with depressions, each accommodating respective laterally projecting locking shoulders.

[00157] 57. The assembly of embodiment 54, wherein the mobile carrier unit and the at least one utility module are detachably interlocked with one another by an undercut engagement mechanism, comprising lateral projections configured on one of the carrier engagement surfaces and the first engagement surface of a container unit, and a receiving recess configured on the other one of one of the carrier engagement surfaces and the first engagement surface of a utility module; where said lateral projections are configured for engagement with said receiving recess, such that interlocking engagement of the utility module and the carrier unit takes place by placing the first engagement surface of a utility module over the carrier engagement surface, such that the utility module's first engaging elements are disposed shifted over the respective carrier engaging elements of the carrier unit, and are then slidingly shifted to obtain sliding interlocking engagement therebetween.

[00158] 58. The assembly of any one of embodiments 54 to 57, further comprising a locking mechanism configured for preventing unintentional detaching of the utility module from the carrier unit.

Milwaukee Electric Tool, Keter Home and Garden Products – Ex. 2003 - Page 1222
Klein Tools v. Milwaukee Electric Tool, Keter Home and Garden Products
IPR2024-01400

[00159] 59. The assembly of embodiment 58, wherein the locking mechanism comprises a locking pin that is configured for snapingly protruding from one of the engagement surfaces into a designated nook on the other engagement surface.

[00160] 60. An interface coupling module comprising at least one engagement surface, compatible for interlocking engagement in a detachable manner with a first engagement surface of a utility module, said interface coupling module comprising an engagement surface having (i) one or more depressed locking locations each configured with a locking rib and at least one locking latch arresting location, configured for engagement with said first engagement surface of a utility module that comprises at least one locking latch and one or more projecting portions, each projecting portion being configured with a locking tongue, or (ii) at least one locking latch and one or more projecting portions each configured with a locking tongue for engagement with said first engagement surface of a utility module that comprises one or more depressed locking locations, each depressed locking locations configured with a locking rib and at least one locking latch arresting location

[00161] 61. The interface coupling module of embodiment 60, being configured for detachable or fixed attachment to a surface of an object.

[00162] 62. The interface coupling module of embodiment 60 or 61, being a cargo interface module for a utility vehicle configured for attaching one or more utility modules to the vehicle.

[00163] 63. The interface module of embodiment 60 or 61, being a surface mount for attaching utility modules

[00164] 64. The interface module of embodiment 60 or 61, being a tool mount or a tool rack.

[00165] 65. The interface module of embodiment 60 or 61, being a belt mount for mounting of utility modules to a workers belt;

[00166] 66. The interface module of embodiment 60 or 61, being an interface mount module for coupling two utility modules to one another.

Milwaukee Electric Tool, Keter Home and Garden Products – Ex. 2003 - Page 1223
Klein Tools v. Milwaukee Electric Tool, Keter Home and Garden Products
IPR2024-01400

BRIEF DESCRIPTION OF THE DRAWINGS

[00167] In order to better understand the subject matter that is disclosed herein and to exemplify how it may be carried out in practice, embodiments will now be described, by way of non-limiting examples only, with reference to the accompanying drawings, in which: Figs. 1A to 6G are directed to a first example of a locking mechanism, wherein:

[00168] Fig. 1A is a top perspective view of a container assembly according to an example of the present disclosure;

[00169] Fig. 1B is an exploded perspective view of the container assembly of Fig. 1A;

[00170] Fig. 1C is a bottom, front perspective view of Fig. 1B;

[00171] Fig. 1D is a bottom, rear perspective view of Fig. 1B;

[00172] Fig. 2A is a sectioned portion along line A-A in Fig. 1A;

[00173] Fig. 2B is a sectioned portion along line B-B in Fig. 1A;

[00174] Fig. 2C is a sectioned portion along line C-C in Fig. 1A;

[00175] Figs. 3A to 3D are consecutive steps illustrating locking engagement of the locking tongue of the second container with the respective locking rib of the first container;

[00176] Figs. 4A to 4D are consecutive steps illustrating locking engagement of the locking latch of the second container with the respective locking latch arresting location of the first container;

[00177] Figs. 5A to 5E schematically demonstrate modularity of a container assembly according to the disclosure;

[00178] Figs. 6A to 6G are various combinations of a modular container assembly according to examples of the present disclosure.

[00179] Figs 7 to 12 are directed to a carrier unit and another example of a locking mechanism, wherein:

Milwaukee Electric Tool, Keter Home and Garden Products – Ex. 2003 - Page 1224
Klein Tools v. Milwaukee Electric Tool, Keter Home and Garden Products
IPR2024-01400

[00180] Fig. 7A is container carrier assembly according to an example of the disclosure, illustrating a top, left perspective view of a container unit, mounted on top of a carrier unit;

[00181] Fig. 7B is a top, left perspective view of a second container unit, mounted on top of a first container unit, which in turn is mounted on top of a carrier unit according to an example of the present disclosure;

[00182] Fig. 8A is a top, left perspective view of a carrier unit, illustrating the carrier engagement surface in further detail;

[00183] Figs. 8B and 8C are a top and a bottom perspective view of a carrier unit, illustrating the container unit's first engagement surface in further detail;

[00184] Fig. 9A is a side section along line F-F in Fig. 7A, illustrating the container unit and the carrier unit unattached;

[00185] Fig. 9B is a side section along line F-F in Fig. 7A illustrating the container unit and the carrier unit attached;

[00186] Fig. 9C is a close-up view of Fig. 9B;

[00187] Fig. 9D is a sectioned view along line F-F in Fig. 7A illustrating the interlocking engagement of the carrier engaging elements together with the container unit's first engaging elements;

[00188] Fig. 10A is a sectioned view along line D-D in Fig. 7A, illustrating the locking mechanism;

[00189] Fig. 10B is an enlarged image of the portion marked M in Fig. 10A;

[00190] Fig. 11A illustrates different sizes of container units forming an assembly, at a tilted orientation;

[00191] Fig. 11B illustrates an assembled configuration balanced vertically relatively to the ground;

Milwaukee Electric Tool, Keter Home and Garden Products – Ex. 2003 - Page 1225
Klein Tools v. Milwaukee Electric Tool, Keter Home and Garden Products
IPR2024-01400

[00192] Fig. 12A shows a container assembly wherein the female coupler comprises two locking ribs extending at respective side edges of two neighboring depressed locking locations;

[00193] Fig. 12B is a section along line H-H in Fig. 12A;

[00194] Fig. 12C illustrates the utility module apart from the container and flipped, so as to expose the mating coupling mechanism.

[00195] Figs. 13A-13D, 14A-14C, 15A-15B, 16A-16B, 17, 18A-18C, and 19-24 are different embodiments and configurations of utility modules and utility assemblies according examples of this disclosure.

DETAILED DESCRIPTION OF EMBODIMENTS

[00196] Reference is first being made to Figs. 1A to 6G, directed to a first configuration of a coupling mechanism. For sake of convenience the utility modules are exemplified as containers and respectively the utility assembly is illustrates as a tool caddy. It is however appreciated that the utility modules can be of any type, shape or size, as discussed hereinabove and as will be exemplified below.

[00197] Attention is first directed to Figs. 1A to 4D, illustrating a container assembly generally designated 20, comprising four containers 22, 24, 26 and 28 disposed in a triple stage configuration, the stages designated A, B and C. In the illustrated example containers 24 and 26 of the second stage are half-size and overlap the footprint of the first stage container 22 and the third stage container 28, wherein the first container 22 is for example a hand tool container and containers 24 to 28 are organizers or the like.

[00198] The term 'first container' as used herein denotes a container bearing over a top face thereof at least one other container, said at least one other container denoted herein as a 'second container'. It is thus appreciated that a second container of a container assembly comprising three or more stages of containers' serves as second container when referred to the first stage container, and as a first container when referred to a third stage container mounted thereover. Accordingly, in the illustrated example of Figs. 1A-2C, container 22 is a first container and containers 24 and 26 are second containers, whilst they function as first containers when discussing locking arrangement with respect to third stage container 28.

Milwaukee Electric Tool, Keter Home and Garden Products – Ex. 2003 - Page 1226
Klein Tools v. Milwaukee Electric Tool, Keter Home and Garden Products
IPR2024-01400

[00199] Each of the containers is configured with a lid L constituting a top face of the respective container, said lids being pivotally attached and securely articulated to the respective container through a toggle locking latch 29. Each top face (see Fig.lB) is configured with several depressed locking locations 32 and it is seen that the at least two depressed locking locations are disposed behind one another along imaginary lines I, II and III (though not necessarily aligned).

[00200] Each such depressed locking location is in turn configured with a laterally projecting locking rib 36 extending from a rear portion of the depressed locking location 32 towards a front face of the container. The locking rib 36 has a flat top surface 38 substantially flush with a top surface of the respective lid L, and a slanting bottom surface 40. A front portion 46 of the depressed locking location 32 is slanted too, in the same orientation as bottom surface 40 (i.e. substantially parallel thereto).

[00201] Furthermore, the top face, namely lid L of the containers, is configured with at least one locking latch arresting location in the form of a recess 50 disposed at a front portion of the respective top face and configured with a slanted rear wall portion 52 and a right angled front wall portion 53.

[00202] A bottom face 54 of each container 22, 24, 26 and 28 is configured with several projecting portions 56, extending in register with the depressed locking locations 32, and it is seen that the at least two projecting portions 56 are disposed behind one another along the imaginary lines I, II and III (though not necessarily aligned).

[00203] Each projecting portions 56 is configured with a locking tongue 60 laterally projecting rearwards and having a slanted surface 62 corresponding with slanting surface 40 of locking rib 36. Also, a front portion 66 of the projecting portions 56 slants substantially parallel to the slanted surface 62 of the locking tongue 60.

[00204] It is essential that the at least two depressed locking locations 32 and the at least two projecting portions 56 be disposed behind one another (though not necessarily aligned), as exemplified by imaginary lines I, II and III (though not necessarily aligned).

[00205] A plunger-like locking latch 70 is disposed at a front portion of each container, said locking latch 70 disposed in register with the recesses 50 and configured with a slanting rear wall

Milwaukee Electric Tool, Keter Home and Garden Products – Ex. 2003 - Page 1227
Klein Tools v. Milwaukee Electric Tool, Keter Home and Garden Products
IPR2024-01400

portion 72 and a right angled front wall portion 74, corresponding with the sloping wall portions of the recesses 50. The locking latch 70 has an elongate finger engaging aperture 73 (Fig. 2A) accessible through an aperture 75 formed in register at a front wall face of the respective second container, said locking latch 70 being normally biased to project under force of coiled spring 71, such that the locking latch 70 is axially displaceable between a projecting, locked position and a temporary retracted position during transition into the locked position.

[00206] The locking latch 70 is typically single-handedly manipulable between its locking position and its releasing position, such that manipulation of the locking latch to disengage it from the locking latch arresting location 50 can be easily facilitated using one hand simultaneously with gripping the carrying handle 80. As seen in Figs. 1A-2C, manipulating the finger engaging aperture 73, being part of locking latch 70, is disposed opposite to and at finger-reach distance from the carrying handle 80 when the handle is at its carrying position tilted upwards. This enables a grab, release and go detachment of the second utility module from the first utility module in a simple single-handed operation.

[00207] When it is required to detachably attach a second container over a first container, the former is placed over the later (Fig. 3A), placing the projecting portions 56 within the depressed locking location 32 (Fig. 3B) with the locking tongues 60 engaging below and being gradually arrested by the respective locking ribs 36 arresting is obtained (Fig. 3C) until complete arresting is obtained (Fig. 3D). Simultaneously, as the locking tongues 60 arrest by the locking ribs 36, the locking latch 70 of the second container slides into the locking latch arresting location (recess 50) and finally snaps into locking engagement therewith. It is noted (Figs 4A to 4D) that first (Figs. 4B and 4C) the locking latch 70 displaces upwards against the biasing effect of spring 71, and when the second container reaches the final locking position over the first container, the locking latch 70 plunges into arresting position within the recess 50.

[00208] At the locked position the second container is attached over the top face of the first container, such that they can be moved as an integrated unit. Detaching of a second container from a first container is easily facilitated by unlocking, obtained by displacing the locking latch 70 upwards against the biasing effect of spring 71, whereby the second container can be displaced with respect to the first container and detached therefrom.

Milwaukee Electric Tool, Keter Home and Garden Products – Ex. 2003 - Page 1228
Klein Tools v. Milwaukee Electric Tool, Keter Home and Garden Products
IPR2024-01400

[00209] As further seen in Figs. 1A-4D, each of the containers 22, 24, 26 and 28, is configured at a front face thereof with a tiltable carrying handle 80, for carrying a respective container or the entire container assembly 20. Also seen, some of the containers can be configured with fender-like protectors 90 at their corners.

[00210] Further attention is now directed to Figs. 5A to 5E demonstrating examples of modularity of a container assembly according to the disclosure. Fig. 5A is a planner top view of a first container 94 and Figs. 5B to 5E illustrate second containers superimposed over the first container 94. In Fig. 5B a second container 96 is substantially as big as the first container 94, i.e. having the same footprint. In Fig. 5C a second container 98 is as wide as the first container 94, however narrower in depth, and disposed at a front portion of the first container. In Fig. 5D two second containers 99A and 99B are mounted over the first container 94 and occupy substantially the entire footprint thereof, whereby each of containers 99A and 99B is independently attachable and detachable from the first container 94, as exemplified hereinabove. In Fig. 5E two second containers 100A and 100B are positioned over the first container 94, occupying the entire width though narrower in depth and extending from a front portion of the first container 94.

[00211] Turning now to Figs. 6A to 6K, there are illustrated several examples of container assemblies, subassemblies and their components. Fig. 6A illustrates a disassembled container assembly collectively designated 104 and comprising a base container 106, a chest of drawers module 108 comprising three drawers, a tool caddy module 110, a compartmented storage module 112 and a half-sized compartmented storage module 114 (typically two of which). It is noted that the base container is configured for locomoting and comprises at a rear thereof wheels 116 and a telescopic handle 118.

[00212] As can be appreciated from Figs. 6B through 6D, various container assemblies are illustrated, the arrangement is such that in practice any module can constitute either a first container or a second container, as defined hereinabove (though it is more likely that base container 106 serves as a first container).

[00213] Figs. 6E and 6F illustrate a chest of drawers module 108, illustrated separately in Fig. 6E and mounted over a similar drawer module 108 in Fig. 6F. It is appreciated that the drawers of each module can be locked at their closed position to prevent spontaneous opening thereof

Milwaukee Electric Tool, Keter Home and Garden Products – Ex. 2003 - Page 1229
Klein Tools v. Milwaukee Electric Tool, Keter Home and Garden Products
IPR2024-01400

whilst carrying a module. Furthermore, each module 108 is configured with a pair of carrying handles 115 disposed at top side wall portions thereof, to facilitate carrying of the module.

[00214] In Fig. 6G there is illustrated a subassembly comprising a first container in the form of a tool caddy module 110 and second container in the form of a compartmented storage module 112 attached thereto, whilst the lid 119 of the first container is open facilitating access to the contents thereof.

[00215] Further attention is now directed to Figs. 7A to 16B, showing a third aspect of the disclosure, namely a utility module being a mobile carrier unit and comprising at least one carrier engagement surface, compatible for interlocking engagement in a detachable manner with a first engagement surface of a second utility module. For sake of example only, the second utility module exemplified in the annexed drawings is in the form of a utility container. It is however appreciated that the utility modules can be of any type, shape or size, as discussed hereinabove and as will be exemplified below. Accordingly, the term container unit as used in the following description denotes any type of a utility module, as discussed herein the specification.

[00216] Attention is first directed to Fig. 7A, illustrating a container carrier assembly generally designated 200 comprising a container unit 202 (utility module) mounted on top of a carrier unit 206. The carrier unit 206 is equipped with a telescopic manipulating handle 210, a pair of rear wheels 208 and a set of horizontally stabilizing support legs 212 at a front portion of the carrier unit 206. The carrier unit 206 and the container unit 202 are engaged in an interlocking engagement via their engagement surfaces, i.e. a carrier engagement surface 216 at a top face of the a carrier unit 206 (best seen in Fig. 8A), and the container unit's first engagement surface 220 (namely its bottom face; best seen in Figs. 8B and 8C). The container unit 202 is configured with yet a second engagement surface 226 (namely the container's top face), simulating the carrier engagement surface 216. The container unit 202 further comprises a locking mechanism 230 configured for arresting within a respective notch 231 at the carrier engagement surface 216, to thereby to prevent displacement and separation of the engagement surfaces 216 and 220 once they are interlocked, as later will be explained.

[00217] The carrier engagement surface 216 seen in greater detail in Fig. 8A, illustrates a top perspective view of a carrier unit 206 with the telescopic handle 210 in a retracted position. The

Milwaukee Electric Tool, Keter Home and Garden Products – Ex. 2003 - Page 1230
Klein Tools v. Milwaukee Electric Tool, Keter Home and Garden Products
IPR2024-01400

carrier engagement surface 216 comprises multiple carrier engaging elements 236, depressed from the surface, and designated for interlockingly receiving respective container unit's first engaging elements 240, projecting from the first engagement surface (bottom face) 220 of the container unit 202.

[00218] Each carrier engaging element 236, is a so-called female coupler and has a depressed locking location configured with at least one locking rib extending above a depressed surface and along a sliding path and having an open edge facing in a first sense. As seen in the drawings, it is generally constituted by a receiving recessed depression 244 in the carrier engagement surface 216, configured with a pair of facing locking ribs 248, forming the aforementioned recess. The locking ribs 248 extend substantially parallel to sliding path of the container unit 202 with respect to the carrier unit 206, said path (designated Pin Figs. 7A and 10B). Further noted, side walls 250 of depressions 244 are sloped in order to allow directing of a container unit's first engaging element 240, mounted upon it, to its interlocking position.

[00219] A corresponding coupler configured at the container unit is a so-called male coupler comprising a projecting locking location disposed in register with said depressed locking location and configured with at least one locking tongue extending along said engaging sliding path at a second sense, opposite to said first sense, and configured for arresting engagement at a space between said locking rib and depressed surface. As seen, a single container unit's engaging element 240 is generally constituted a downwardly projecting outwards protrusion 258, projecting from the bottom face 220 of the container 202.

[00220] In order to lock the container 202 over the carrier unit 206, upon placing the container 202 over the carrier engagement surface 216 of carrier unit 206 one must mount the container unit's first engaging elements 240 into the depressions 244 and then slide the container 202 along the sliding path P (i.e. towards the locking ribs 248) so that the engaging elements 240 engage below said projecting ribs/shoulders 248 and the engaging elements 240 are thus arrested at a space between said locking ribs and the depressed surface, as seen in Fig. 9C. Interlocking engagement of the container (or any other utility module) can be facilitated by a single male-female locking mechanism of the aforementioned type, or by a plurality of such locking mechanism, at any location over the carrier unit 206.

Milwaukee Electric Tool, Keter Home and Garden Products – Ex. 2003 - Page 1231
Klein Tools v. Milwaukee Electric Tool, Keter Home and Garden Products
IPR2024-01400

[00221] The shape and size of the locking members is modular as far as the depression 244 in the carrier engagement surface 216, can be single or double in size (e.g. 236 and 236A in Fig. 8A, respectively), so it is large enough to accommodate two container unit's first engaging elements 240, or two neighboring container unit's first engaging elements.

[00222] Locking/engaging and detaching of this configuration is similar to a single locking module.

[00223] The engagement and locking mechanism is modular in the sense that any first article can be easily and readily articulated to a surface of any second article, wherein the articulation is strong and firm (i.e. substantially motionless).

[00224] With further reference to Fig. 7B, there are illustrated two containers 202A and 202B articulated over one another, the arrangement being such that the bottom face of the intermediate container 202A serves for engaging with the top face of the carrier unit 206 and likewise, the top face of the intermediate container 202A serves for engaging with the bottom face of the top container 202B, as discussed herein above. The arrangement is such that each stage is lockingly secured by the locking mechanism 230, wherein each stage can be detached from the stage below upon releasing locking engagement of the respective locking mechanism 230.

[00225] The locking mechanism 230 is shown in further detail in Figs. 10A and 10B. The locking mechanism comprises a locking pin 231 normally biased by spring 233 such that a tip 235 projects from a bottom surface of the container 202 (see also Fig. 8B) and is configured for snap arresting within a respective notch 231 configured at the engagement surface 216 of the carrier unit 206 (seen also in Fig. 8A). The locking pin 231 is slidable within a race at the side wall of the container, and comprises a finger manipulating portion at 237 (accessible through an opening at the side wall of the container), for displacing the locking pin, against the biasing effect of spring 233, into its disengaged position, thus facilitating sliding the container along the path P into disengagement from the carrier unit (or respective other container or utility module). The carrier unit 206 is further configured at a bottom end, with a pair of stability supports 264 (Figs. 8A, 1lB), configured for supporting the carrier unit, with or without a container attached thereto, at an upright, i.e. vertical position, thus preventing it from tipping over, in particular with containers or any other utility module articulated thereto. Stability supports 264 can be,

Milwaukee Electric Tool, Keter Home and Garden Products – Ex. 2003 - Page 1232
Klein Tools v. Milwaukee Electric Tool, Keter Home and Garden Products
IPR2024-01400

according to a particular configuration, an extension of the telescopic handle 210, whereby the stability supports are functional as such only when the handle is fully contracted. However, in the illustration of Figs. 16A-16B the utility assembly 253 is maintained at its upright position owing to said stability supports 264 and further bearing over a side face 266 of the intermediate container 202A, being substantially flush with a bottom face of the stability supports 264.

[00226] With further reference to Figs. 12A to 12C there is illustrated a modification of articulation between a first utility module (container 300 in the particular example) and a second utility module (two work-piece supports 304 in the particular example). The container 300 is substantially similar to that illustrated in the previous examples, wherein the cover/lid 308 is configured with a plurality of female coupler members 310, each configured with a depressed locking location and a pair of locking ribs extending above the depressed surface and along a sliding path. The opposing locking ribs 312A and 312B have an open edge facing in a first sense (the introducing direction).

[00227] In the examples hereinbefore, engagement with a corresponding male coupler took place within the vicinity of a single coupling element, i.e. over two engaging ribs 312A and 312B of a single depressed locking location facing each other. However, in the example of Figs. 12A-12C engagement of the work-piece supports 304 takes place over two engaging ribs 312A and 312B of two neighboring depressed locking locations 308A and 308B. Accordingly, the male coupler of the two work-piece supports 304 is configured for arresting with the two engaging ribs 312A and 312B by two individual (separate) male couplers 316A and 316B, each configured for arresting one of the respective engaging ribs 312A and 312B. Arresting of the male projections 316 takes place as discussed before, by arresting below the respective engaging ribs, within the space at the depressed locking location. In spite of the relative narrow body structure of the work-piece supports 304, they are each configured with a locking mechanism 330, similar to locking mechanism 230 discussed hereinbefore.

[00228] Turning now to Figs. 13A-13D, 14A-14C, 15A-15B, 16A-16B, 17, 18A-18C, and 19-24, there are illustrated various examples of utility modules, utility assemblies and various configurations according to the disclosure.

Milwaukee Electric Tool, Keter Home and Garden Products – Ex. 2003 - Page 1233
Klein Tools v. Milwaukee Electric Tool, Keter Home and Garden Products
IPR2024-01400

[00229] Fig. 13A illustrates a utility module assembly generally designated 400, comprising a wheeled base container 402 supporting an intermediate container 404, bearing in turn a cooler box 406 and a power unit 408 disposed side by side over the intermediate container. At least the intermediate container 404 is configured at a bottom face thereof with a male-type coupling arrangement, for attachment over the cover of the base container, said cover configured with a respective female coupling arrangement. The cover of the intermediate container 404 is configured with a similar female coupling arrangement, and can thus engage with one the utility modules 406 and 408, each configured at its bottom face with a respective male-type coupling arrangement.

[00230] It is seen in Figs. 13B through 13D that the intermediate container 404 is fitted with a pivotal carrying handle 418 articulated at the top side walls thereof. The carrying handle has a thickness t and the arrangement is such that at the stowed/folded position (Figs. 13B, 13D) the handle 418 is received within a peripheral groove 422 extending over a top edge of the intermediate container 404 and a peripheral groove 424 extending at a bottom edge of the utility modules 408 and 406 (cooler box 406 and a power unit 408), such that the handle 418 does not constitute an obstacle in mounting and interlocking a utility module over another utility module. It is also seen that at least some of the utility modules are configured with side handles 428 serving both as carrying handles and as bumpers.

[00231] Figs. 14A to 14C illustrate a first utility module in the form of a container 430 supporting two detachable workpiece-piece supports 432 (attached as discussed herein before with reference to Figs. 12A-12C). Fig. 14C illustrates a utility module in the form of a work surface 436 configured with a vice race 438, so that a vice 440, or other workshop tools can be used. The workpiece-piece supports 432 are configured with a male type coupling having projecting locking locations 444 for engaging with respective female couplers.

[00232] In Figs. 15A and 15B there is illustrated a back-rack 450 being a substantially rigid platform having a carrying handle 451 and configured at one side thereof with a pair of adjustable shoulder harnesses 452, and an adjustable waist harness 454. The other side of the back-rack is configured as a universal utility mounting platform 458, configured with a plurality of attachment locations 460. In the illustrated example all attachment locations 460 are so-called female attachments (as discussed hereinabove in detail), however it is appreciated that the

Milwaukee Electric Tool, Keter Home and Garden Products – Ex. 2003 - Page 1234
Klein Tools v. Milwaukee Electric Tool, Keter Home and Garden Products
IPR2024-01400

attachment locations can just as well be male-type attachments, or a combination of male and female attachments. According to yet an example (not shown), one side of the carrying platform can be configured with male- type attachments, and an opposite side of the platform be configured with female-type attachments, wherein a used has the choice of attaching the platform to the harness system at an orientation of choice.

[00233] In Fig. 16A there is illustrated a utility module in the form of a wheeled carrying unit 464 (shown from a bottom side), similar to that disclosed in connection with Figs. 7A to 11B. The carrying unit 464 comprises a rigid platform 466 fitted at a top face thereof with a female/male attaching arrangement in accordance with the disclosure, such that any utility module according to the disclosure can be detachably attached thereto. Also provided is a telescopic manipulating handle 468 and a pair of wheels 466. The carrying unit can be fitted with a collapsible support plate configuring it into a pushcart (not shown).

[00234] Fig. 16B shows a utility assembly 276 comprising a wheeled base container 278 interlocked with a first intermediate container 280 mounted thereover (constituting a second stage of the assembly), and a second intermediate container 282 mounted thereover (constituting a third stage of the assembly 276), there being yet a fourth stage utility module container 284 mounted over the second intermediate container 282.

[00235] Whilst the second intermediate container 282 has a wider footprint than the first intermediate container 280, this does not constitute any difficulty as far as attaching it over the second intermediate container 282, and further, the top face of the second intermediate container 282 has a great surface suited for articulation thereof of several fourth stage utility modules (only one shown).

[00236] Fig. 17 shows a carrying bag 281 having soft side walls 283 (in the example illustrated made of fabric), however fitted with (integrally or detachable) an articulation platform base 284, said articulation platform made of a firm rigid material and is configured with four male-type coupling locations 288 of the type disclosed hereinabove. The carrying bag 281 has a carrying strap 290 useful for hand held or shoulder carrying of the bag.

Milwaukee Electric Tool, Keter Home and Garden Products – Ex. 2003 - Page 1235
Klein Tools v. Milwaukee Electric Tool, Keter Home and Garden Products
IPR2024-01400

[00237] Figure 18A shows a rigid coupling platform 300, configured with a plurality of female coupling locations (of the type disclosed herein) and further configured with bolt eyes 298 for securing to any desired surface, and carrying bars 313.

[00238] The coupling platform 300 can be attached for example to a truck bed 306 (Fig. 20), directly over the truck bed or over a cargo container attached to the truck. The coupling platform 300 can be attached to a wall, as in Fig. 18B, wherein a plurality of various utility modules can be articulated thereto. For example, utility modules can be an electric charger 315 of a power tool, a wall mounted sorting container 314, a hand tool rack 318 (Fig. 18C), a tool coupling adaptor 320 (Fig. 18C), etc.

[00239] In Fig. 19 there is illustrated a belt-mount 319 configured as a female coupler according to the disclosure, wherein a tool 321 or a bag/pouch configured with a male coupler can be detachably attached thereto.

[00240] In Fig. 21 there is illustrated a wall rack 326 comprising four utility modules in the form of articulation platforms 328 (mountable at different elevations about the wall supports

[00241] 327) each configured for bearing and attaching thereto any utility module in accordance with the disclosure.

[00242] In Fig. 22 there is illustrated a mobile work stand 340 comprising a wheeled base 342 supporting two racks 344 with four utility modules in the form of articulation platforms 346 (mountable at different elevations about the wall supports 327) each configured for bearing and attaching thereto any utility module (e.g. containers 348) in accordance with the disclosure.

[00243] In Fig. 23 the utility module is in the form of a dolly 352 configured with wheels 354 and having a top surface configured with an array of female type couplings, as discussed.

[00244] In Fig. 24 there is illustrated a utility coupling platform 358 suited for articulation to any desired article (e.g. a bag, a tool, etc.). The utility coupling platform is configured at least at one face thereof with a male coupling locations 360 mimicking the coupling arrangement of the disclosure, rendering it suitable for articulation with a coupling system according to the disclosure.

Milwaukee Electric Tool, Keter Home and Garden Products – Ex. 2003 - Page 1236
Klein Tools v. Milwaukee Electric Tool, Keter Home and Garden Products
IPR2024-01400

WHAT IS CLAIMED IS:

1. A container assembly comprising:

a first container comprising:

a first coupler extending from a first face of the first container, the first coupler comprises two sidewalls and a rib, the two sidewalls project from a depressed surface of the first face, the rib extends from at least one of the two sidewalls; and

a latch recess; and

a second container comprising:

a second coupler extending from a second face of the second container, the second coupler comprises a tongue that is offset from the second face, the tongue of the second container is engageable with the rib of the first container, the second coupler defines a first planar surface generally parallel to the second face and that faces away from the second face, and wherein the second coupler defines a second planar surface generally parallel to the second face and that faces towards the second face; and

a latch coupled to the second container, the latch positionable in a locked position in which the latch prevents disengagement of the first container and the second container when the tongue and rib are engaged.

2. The container assembly of claim 1, wherein the first and second couplers on the first and second containers, respectively, engage when the first and second containers are slid along a sliding path defined by the rib and the tongue.

3. The container assembly of claim 1, wherein the first face of the first container comprises a top face of the first container, and wherein the second face of the second container comprises a bottom face of the second container.

4. The container assembly of claim 1, wherein the rib extends in a first direction that is parallel to a bottom face of the first container.

Milwaukee Electric Tool, Keter Home and Garden Products – Ex. 2003 - Page 1237
Klein Tools v. Milwaukee Electric Tool, Keter Home and Garden Products
IPR2024-01400

5. The container assembly of claim 4, wherein the tongue extends in a second direction opposite the first direction.

6. The container assembly of claim 1, wherein the two sidewalls of the first coupler project from the depressed surface away from each other, and wherein the two sidewalls of the first coupler project from the depressed surface at an obtuse angle with respect to the depressed surface.

7. The container assembly of claim 1, wherein the rib is perpendicular to at least one of the two sidewalls, and , wherein the rib is parallel to the depressed surface of the first face.

8. The container assembly of claim 1, wherein a width of the second container is half-size a width of the first container.

9. The container assembly of claim 1, wherein at least one of the latch and the second coupler are actuated between a first position extending above the second face and a second position not extending above the second face.

10. The container assembly of claim 1, wherein when the tongue and rib are engaged:

a first side wall of the two sidewalls of the first coupler and a second sidewall of the second coupler interface to restrict displacement between the first container and the second container in a third direction perpendicular to the first direction and parallel to the first face of the first container.

11. A first container configured to be removably coupled to a second container, the first container comprising:

a first face;

a second face; and

a first coupler that extends from the first face, wherein the first coupler comprises two sidewalls and a rib, the two sidewalls project from a depressed surface of the first face, the rib extends from at least one of the two sidewalls;

Milwaukee Electric Tool, Keter Home and Garden Products – Ex. 2003 - Page 1238
Klein Tools v. Milwaukee Electric Tool, Keter Home and Garden Products
IPR2024-01400

a second coupler that extends from the second face, wherein the second coupler comprises a tongue that is offset from the second face, wherein the second coupler defines a first planar surface generally parallel to the second face and that faces away from the second face, and wherein the second coupler defines a second planar surface generally parallel to the second face and that faces towards the second face;

a latch recess; and

a latch, the latch positionable in a locked position in which the latch interlocks with a second latch recess in the second container restricting displacement between the first container and the second container.

12. The first container of claim 11, wherein the first face comprises a top face of the first container, and wherein the second face comprises a bottom face of the first container.

13. The first container of claim 11, wherein the rib extends in a first direction that is parallel to a bottom face of the first container, and wherein the tongue extends in a second direction opposite the first direction.

14. The first container of claim 11, wherein the two sidewalls of the first coupler project from the depressed surface away from each other, and wherein the two sidewalls of the first coupler project from the depressed surface at an obtuse angle with respect to the depressed surface.

15. The first container of claim 11, wherein the rib is perpendicular to at least one of the two sidewalls, and wherein the rib is parallel to the depressed surface of the first face.

16. A container assembly comprising:

a first container comprising:

a first coupler extending from a first face of the first container, the first coupler comprises two sidewalls and a rib, the two sidewalls project from a depressed surface of the first face, the rib extends from at least one of the two sidewalls, and the rib extends in a first direction that is parallel to the first face of the first container; and

Milwaukee Electric Tool, Keter Home and Garden Products – Ex. 2003 - Page 1239
Klein Tools v. Milwaukee Electric Tool, Keter Home and Garden Products
IPR2024-01400

a latch recess; and

a second container comprising:

a second coupler extending from a second face of the second container, the second coupler comprises a tongue that is offset from the second face, the tongue extends in a second direction opposite the first direction, the tongue of the second container is engageable with the rib of the first container, the second coupler defines a first planar surface generally parallel to the second face and that faces away from the second face, and wherein the second coupler defines a second planar surface generally parallel to the second face and that faces towards the second face; and

a latch coupled to the second container, the latch positionable in a locked position in which the latch prevents disengagement of the first container and the second container when the tongue and rib are engaged.

17. The container assembly of claim 16, wherein when the tongue and rib are engaged:

a portion of the first coupler and a portion of the second coupler interface to restrict displacement between the first container and the second container in a third direction perpendicular to the first direction and parallel to the first face of the first container.

18. The container assembly of claim 16, wherein at least one of the latch and the second coupler actuate between a first position and a second position, wherein the at least one of the latch and the second coupler extends above the second face when in the first position.

19. The container assembly of claim 16, wherein the first face of the first container comprises a top face of the first container, and wherein the second face of the second container comprises a bottom face of the second container.

20. The container assembly of claim 1, wherein the two sidewalls of the first coupler project from the depressed surface at an obtuse angle with respect to the depressed surface.

ABSTRACT

The present disclosure concerns a coupling mechanism for detachably attaching two or more utility modules to one another, utility assembles, mobile carriers and other attachable modules and articles.

Milwaukee Electric Tool, Keter Home and Garden Products – Ex. 2003 - Page 1241
Klein Tools v. Milwaukee Electric Tool, Keter Home and Garden Products
IPR2024-01400

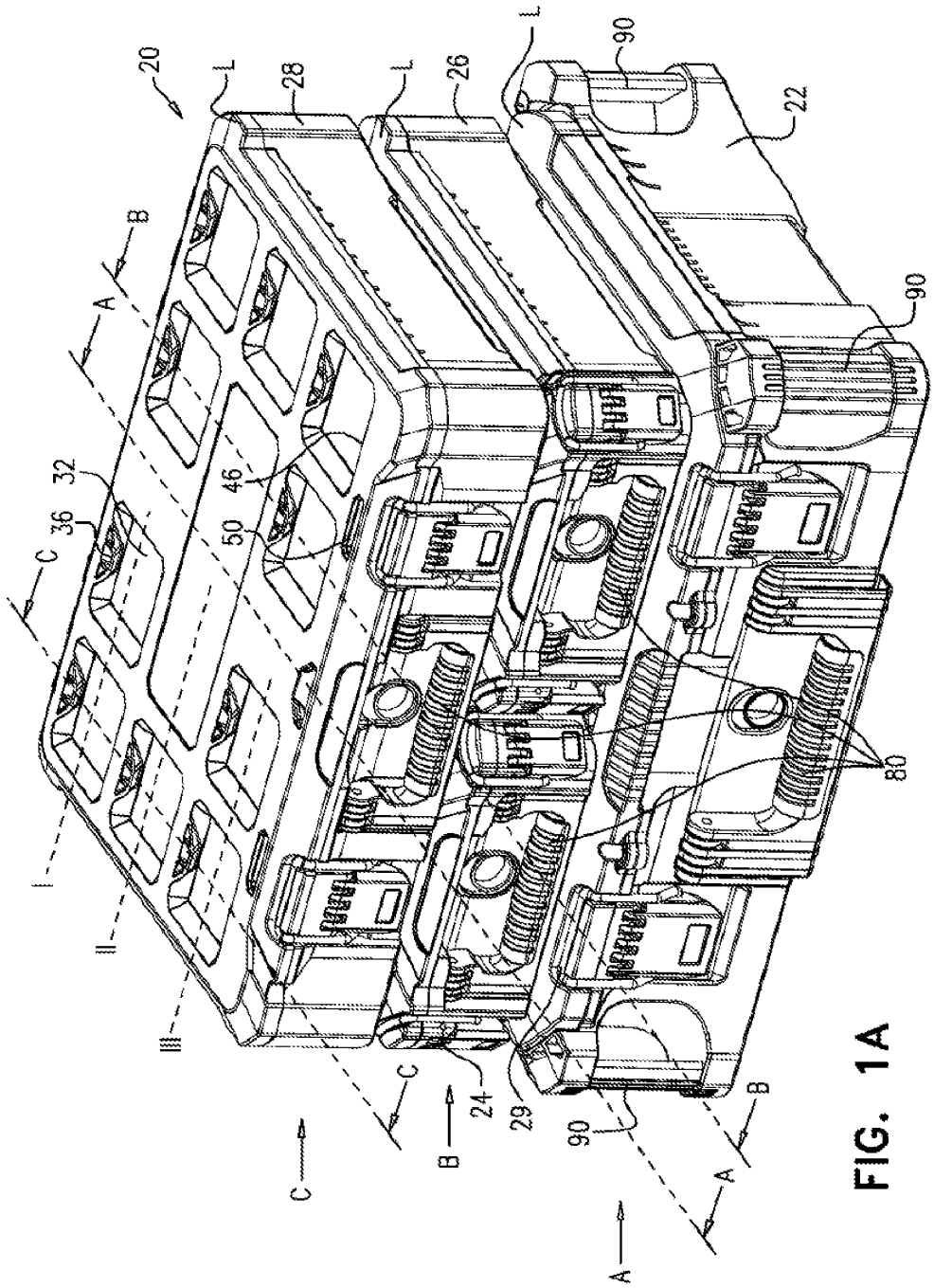

FIG. 1A

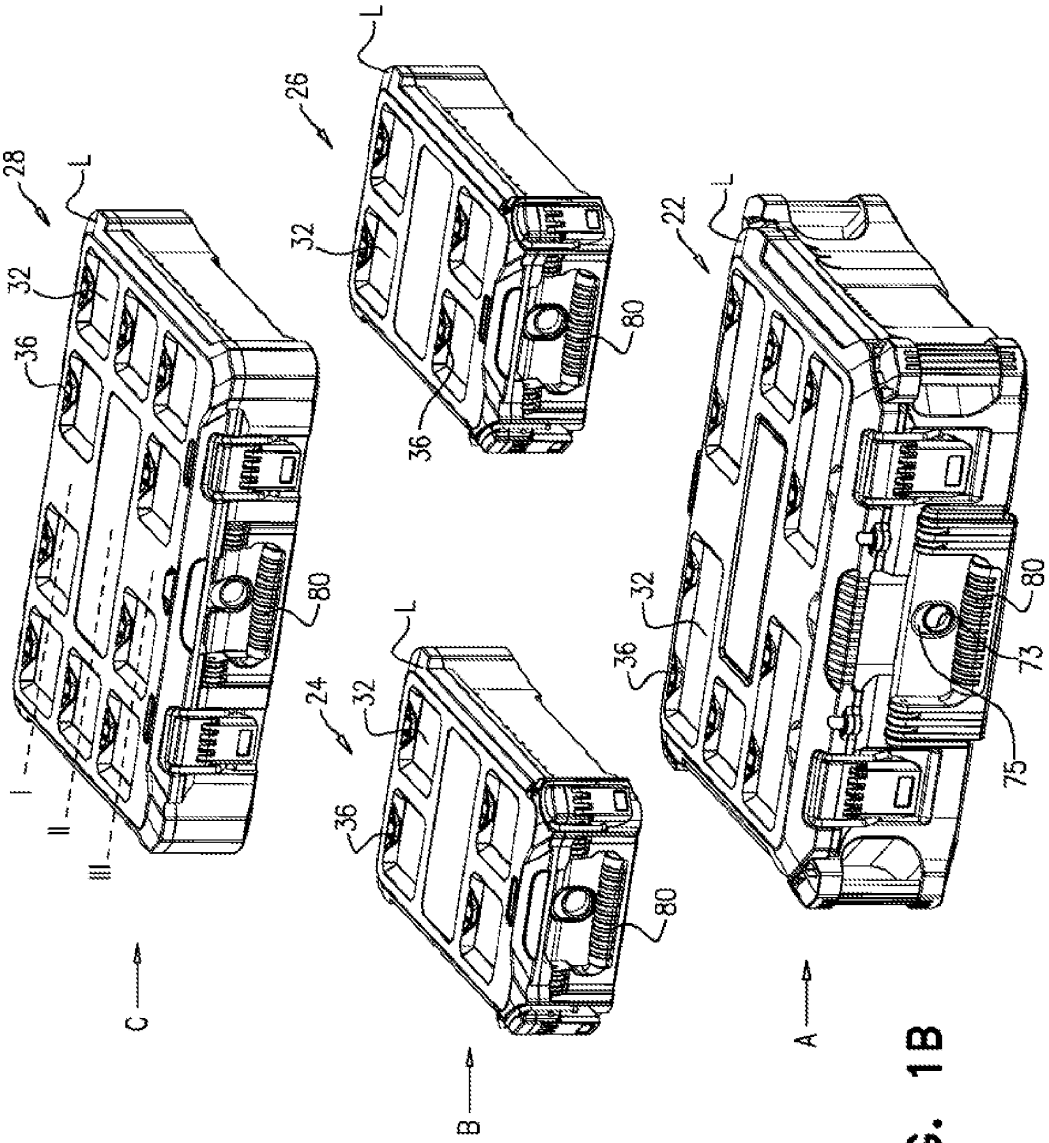

FIG. 1B

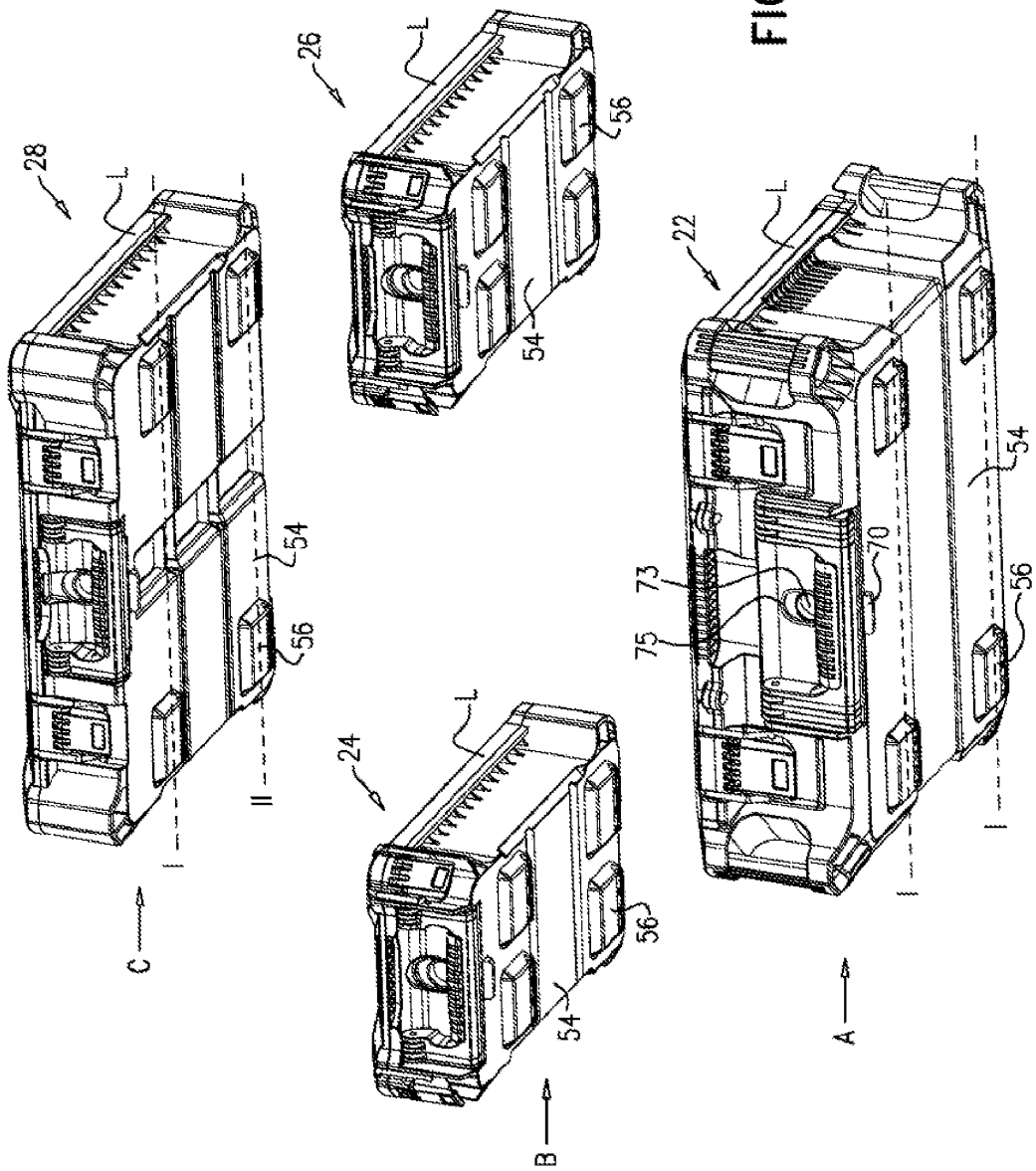

FIG. 1C

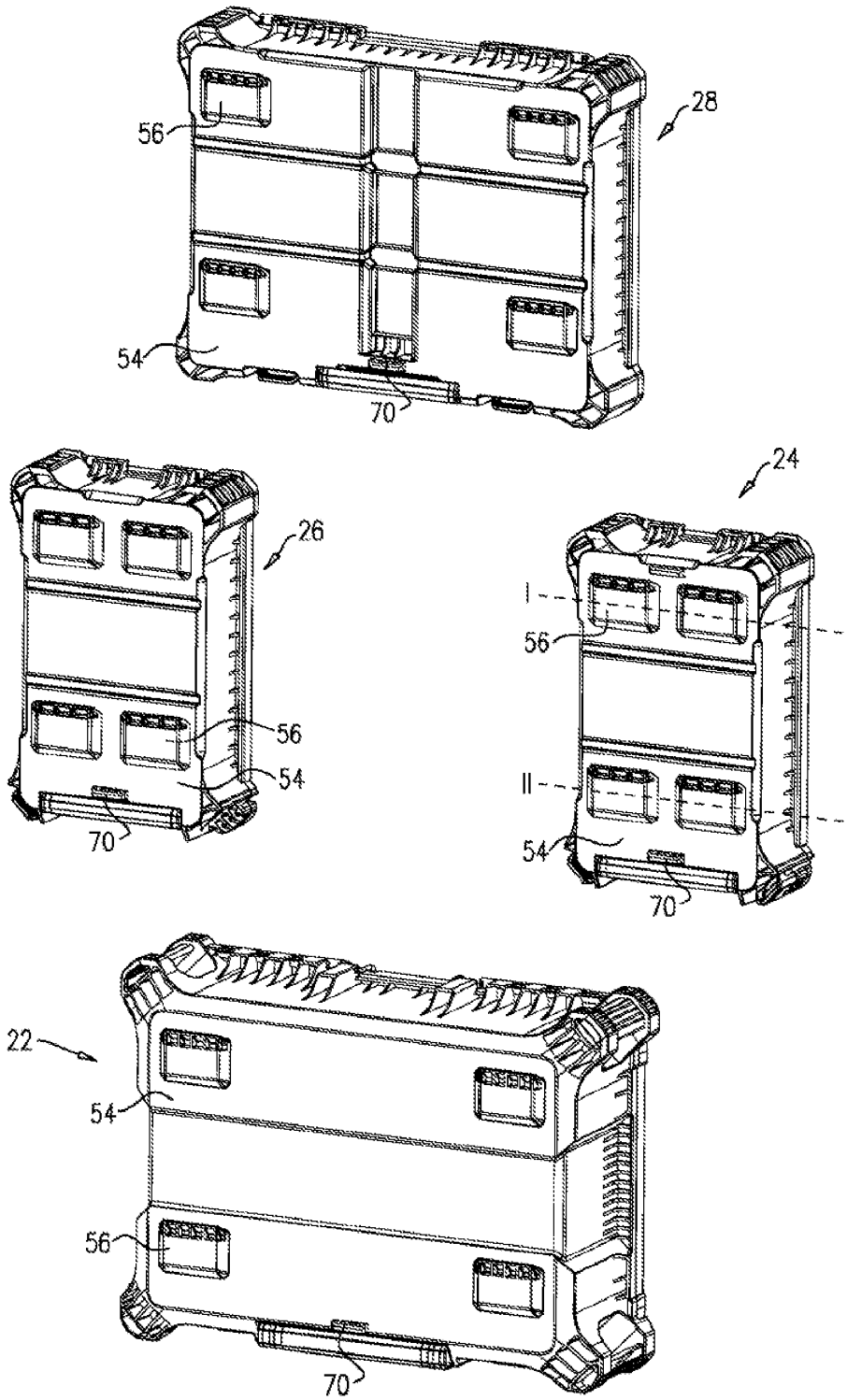

FIG. 1D

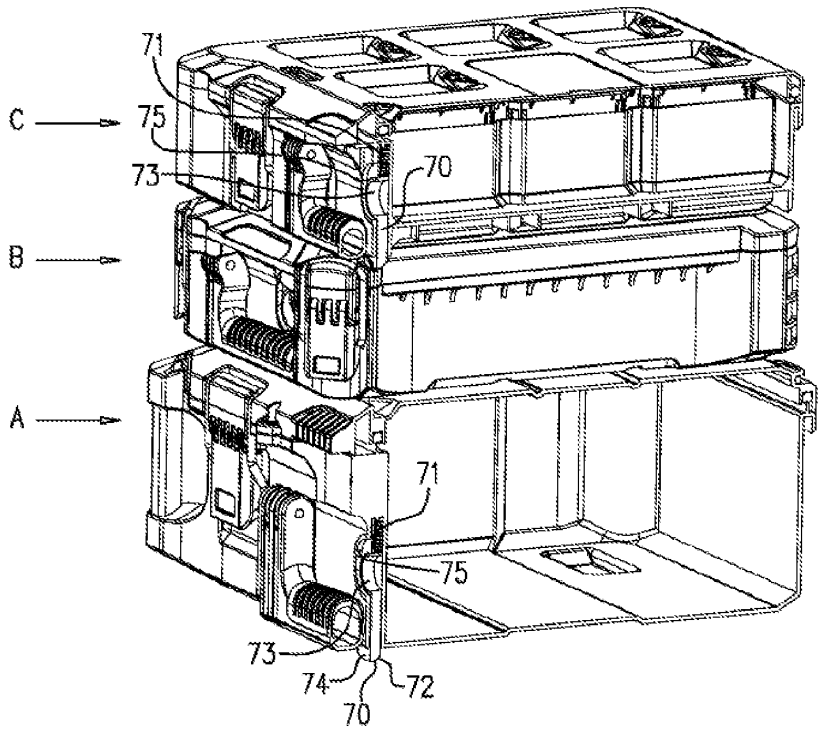

FIG. 2A

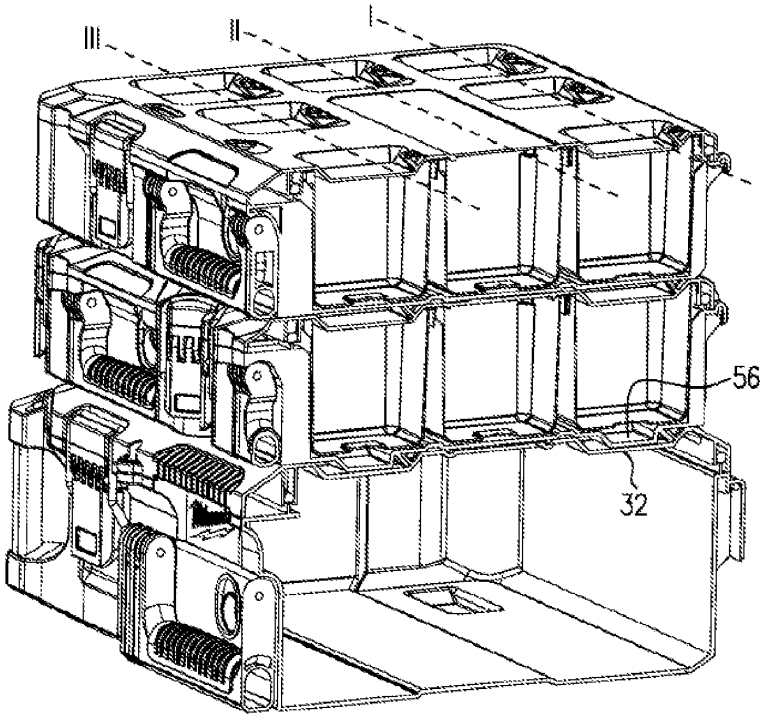

FIG. 2B

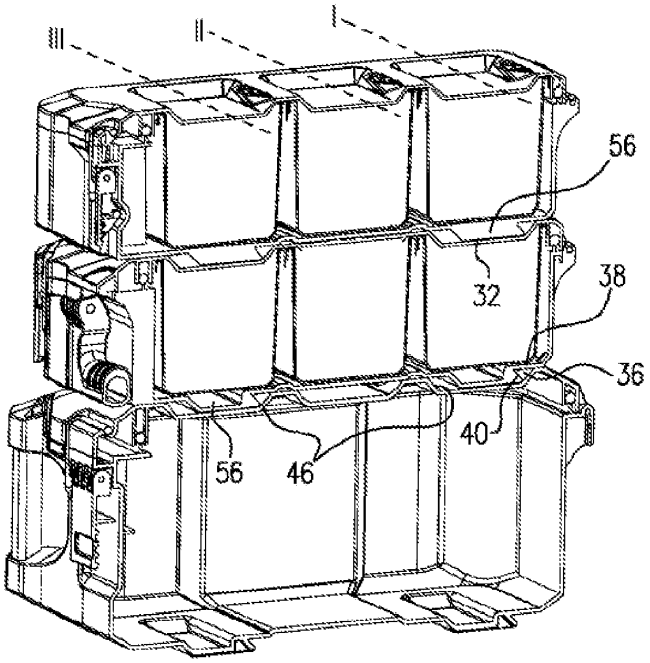

FIG. 2C

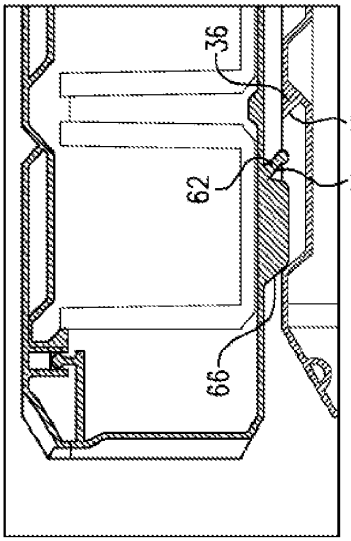

FIG. 3A

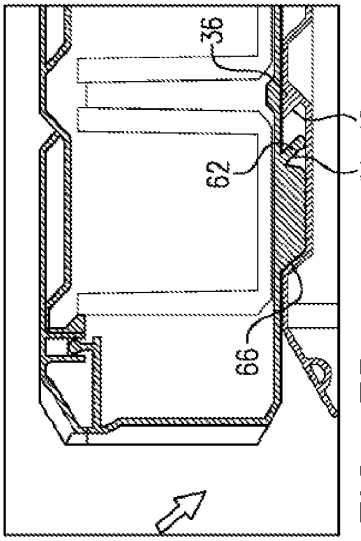

FIG. 3B

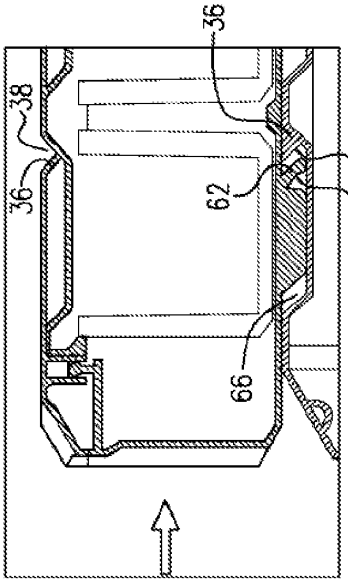

FIG. 3C

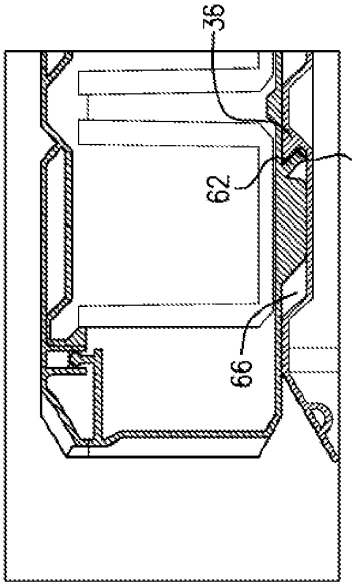

FIG. 3D

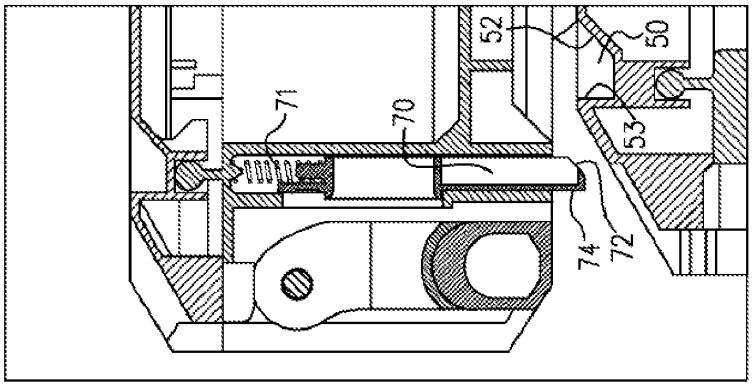

FIG. 4A

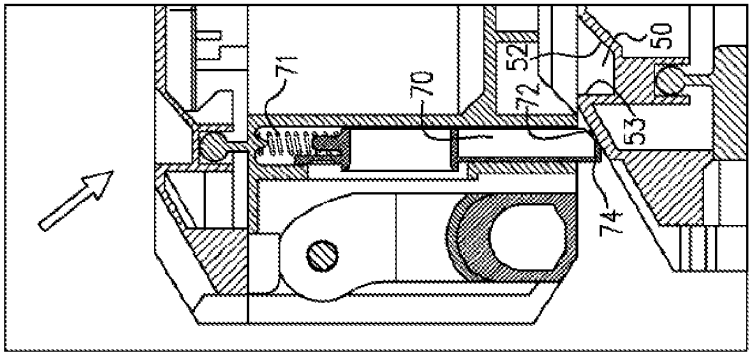

FIG. 4B

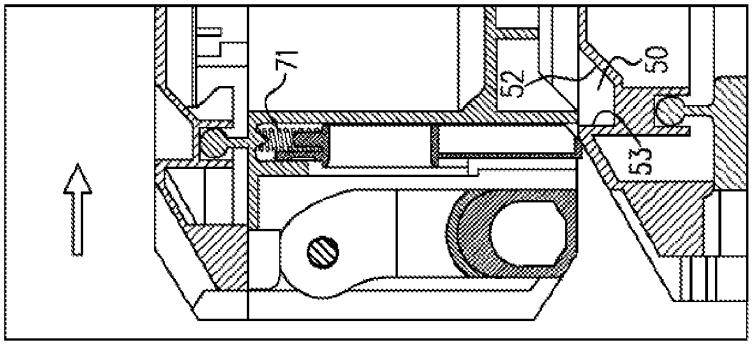

FIG. 4C

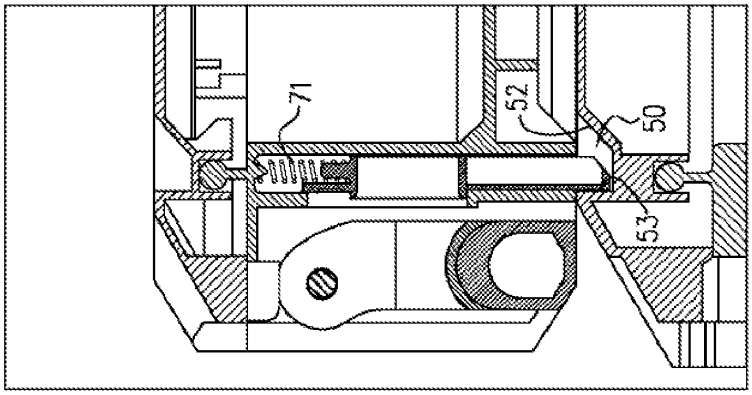

FIG. 4D

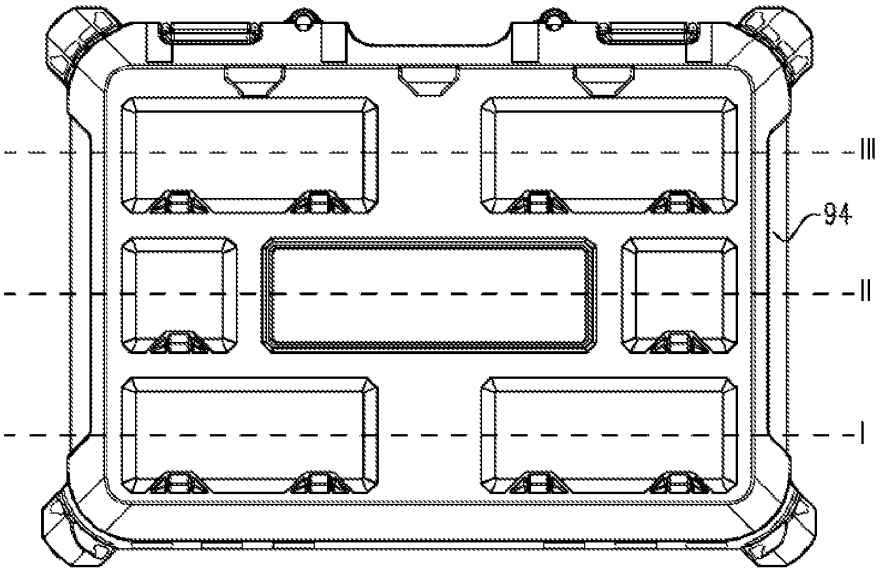

FIG. 5A

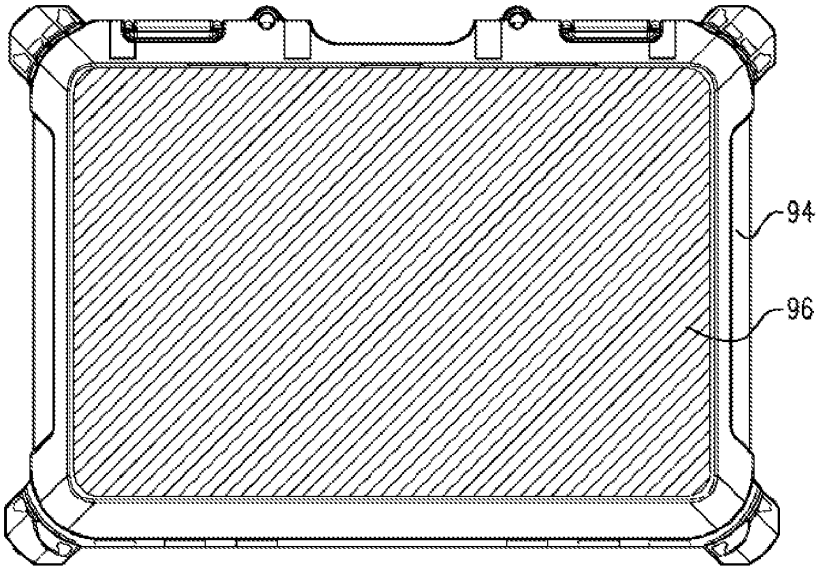

FIG. 5B

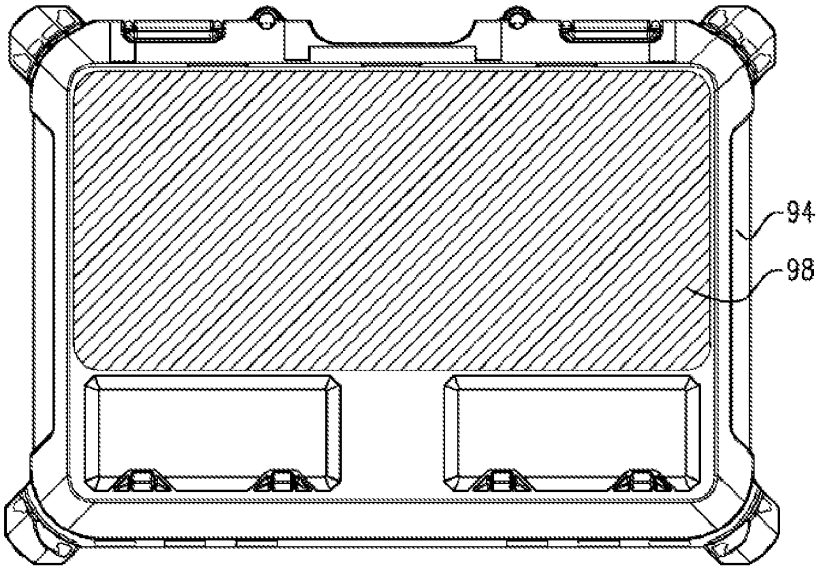

FIG. 5C

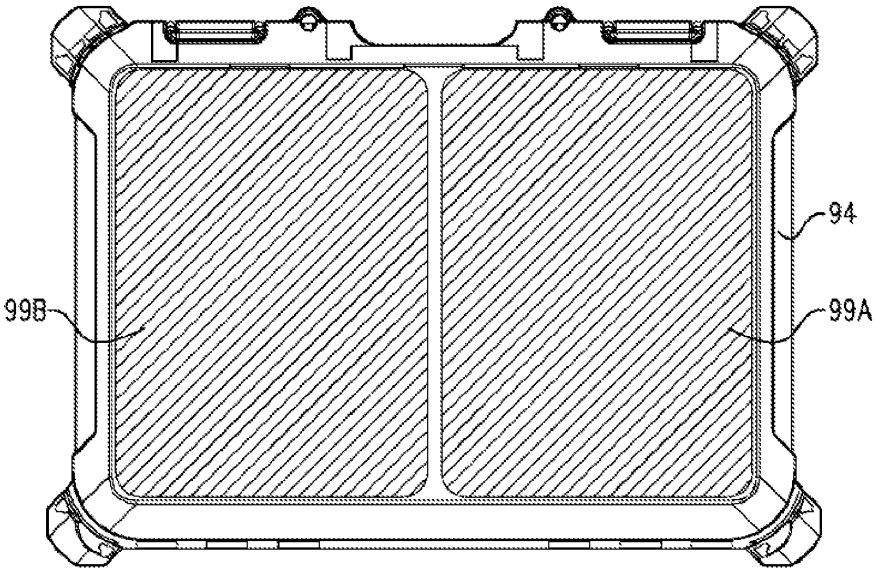

FIG. 5D

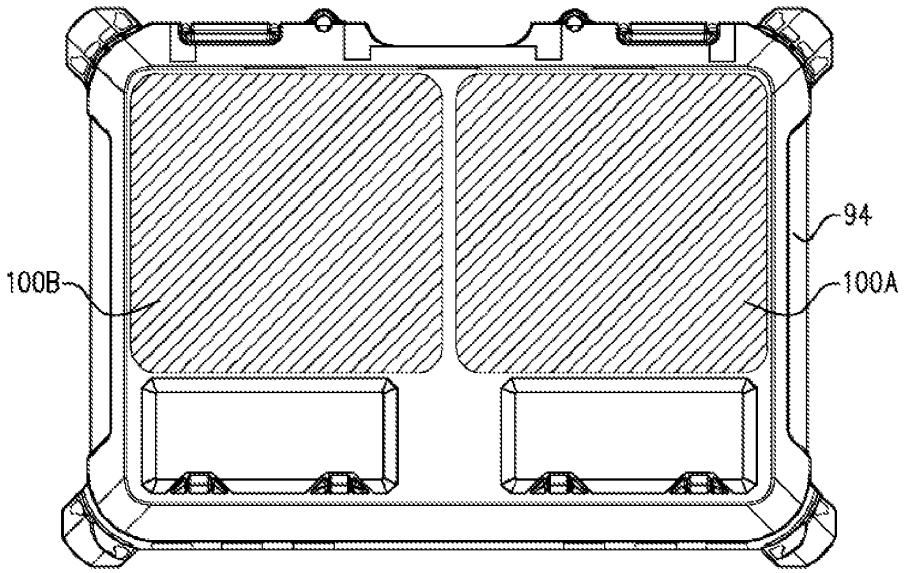

FIG. 5E

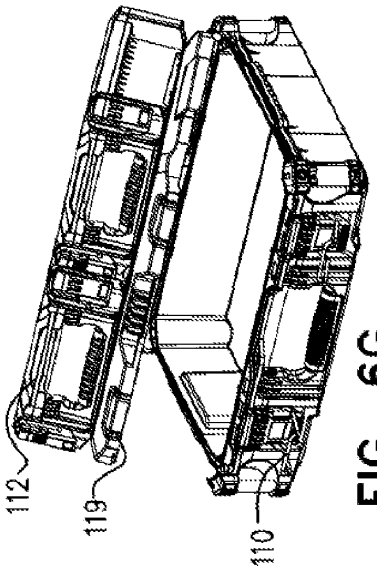

FIG. 6G

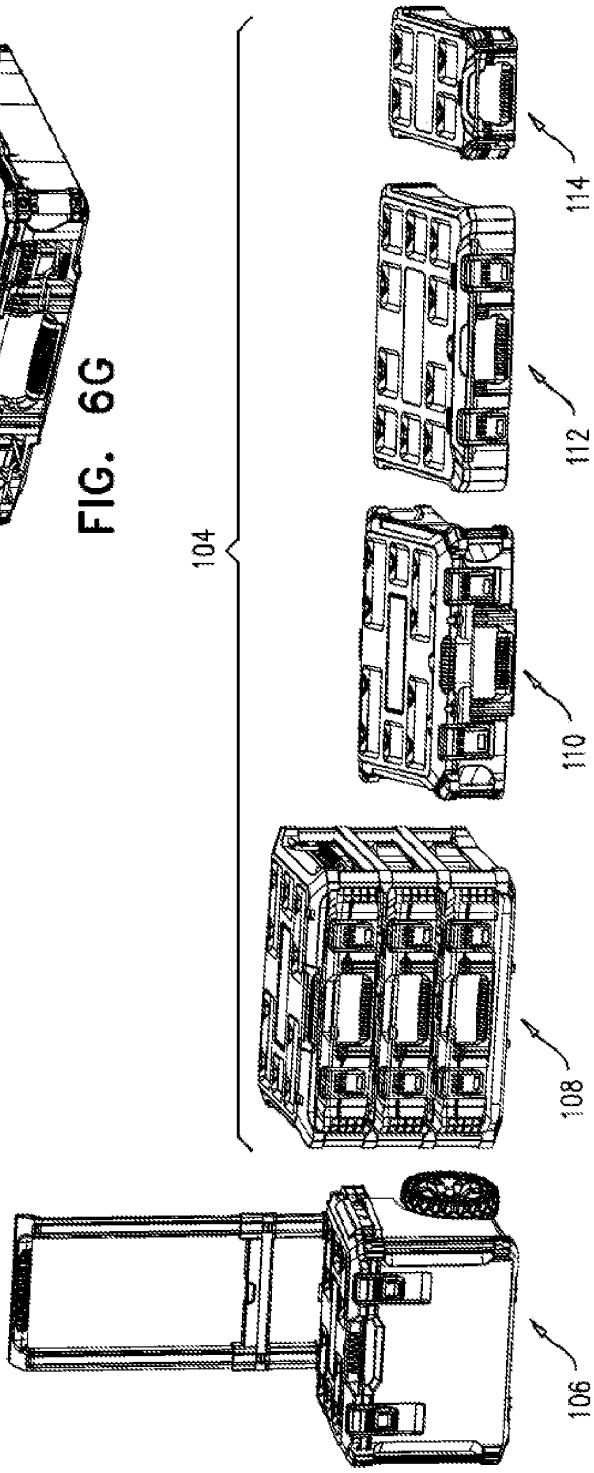

FIG. 6A

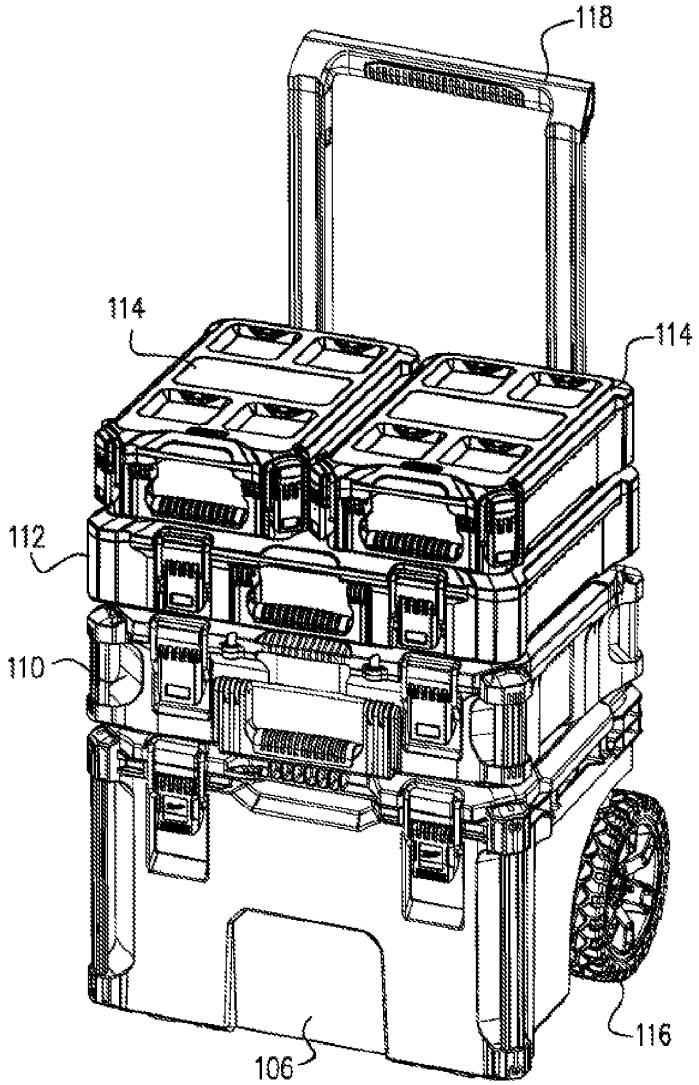

FIG. 6B

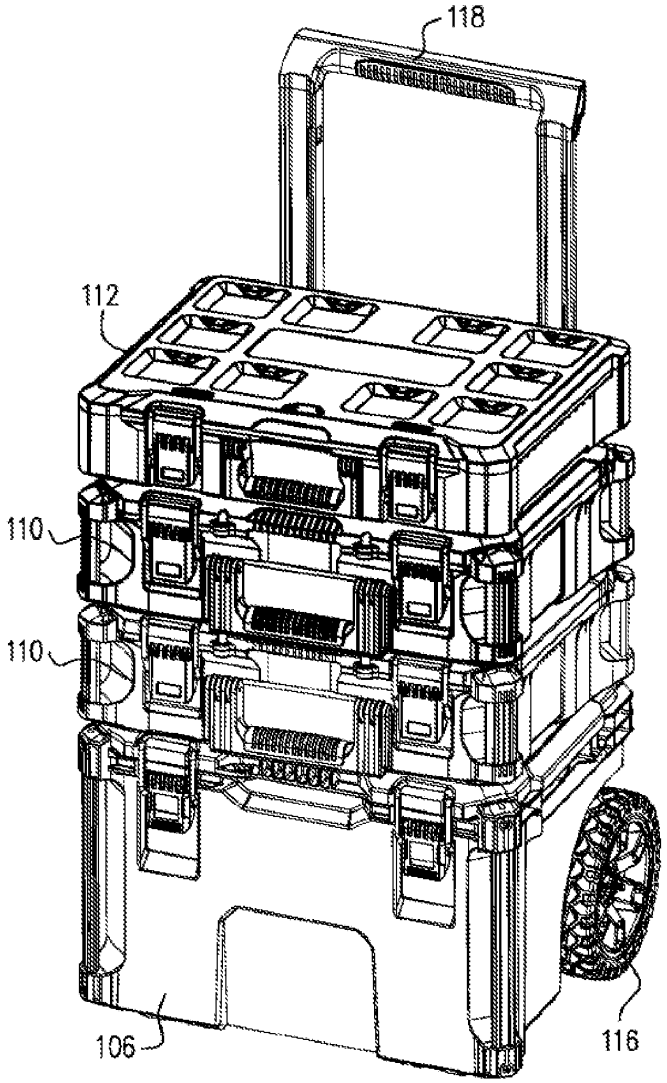

FIG. 6C

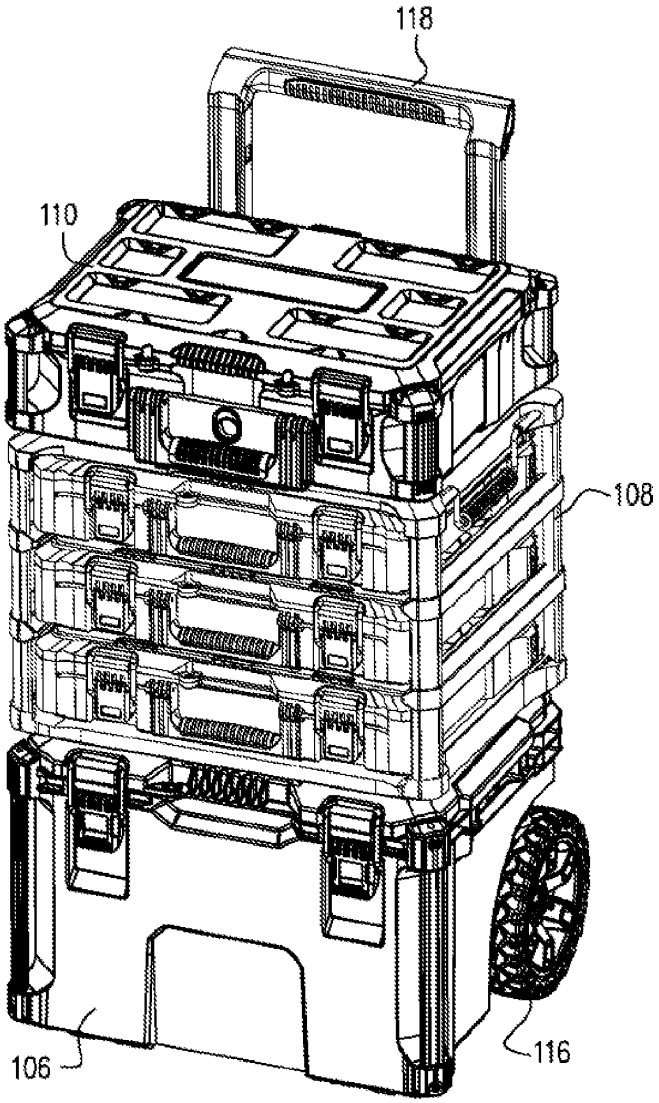

FIG. 6D

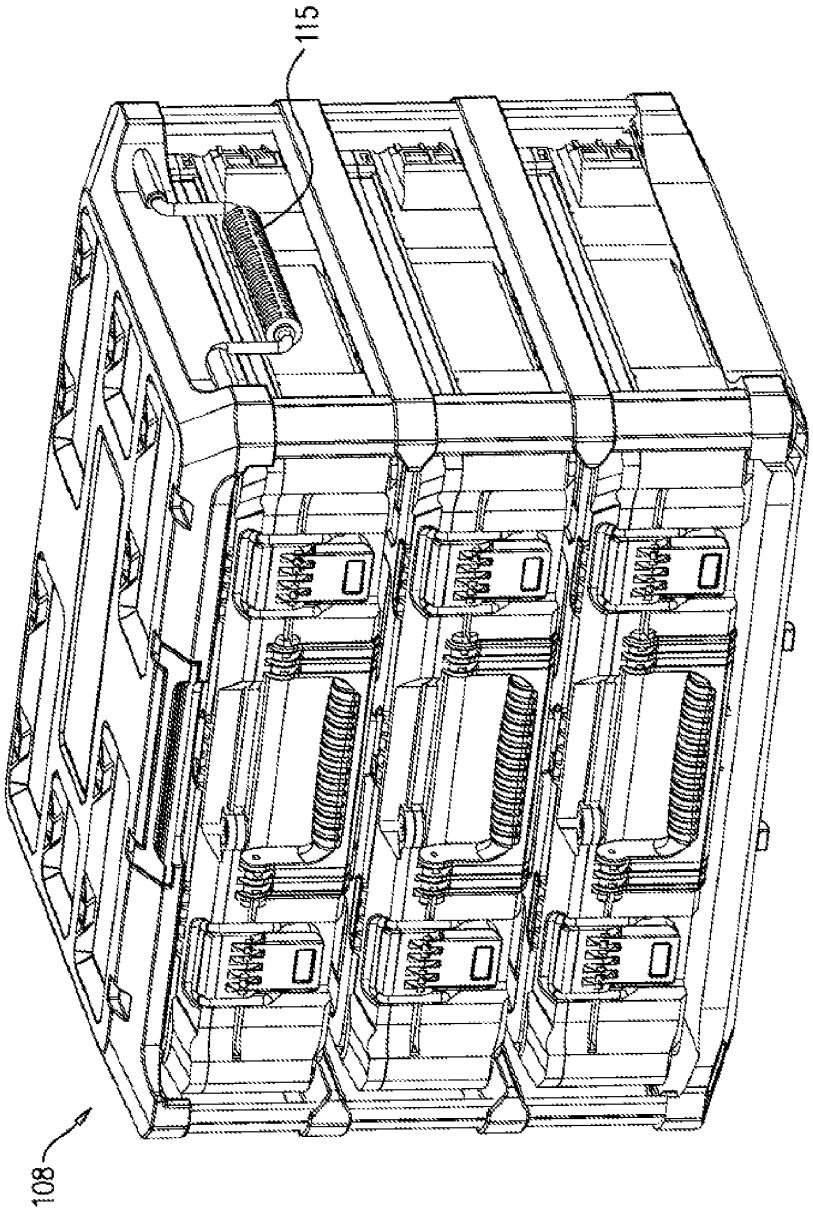

FIG. 6E

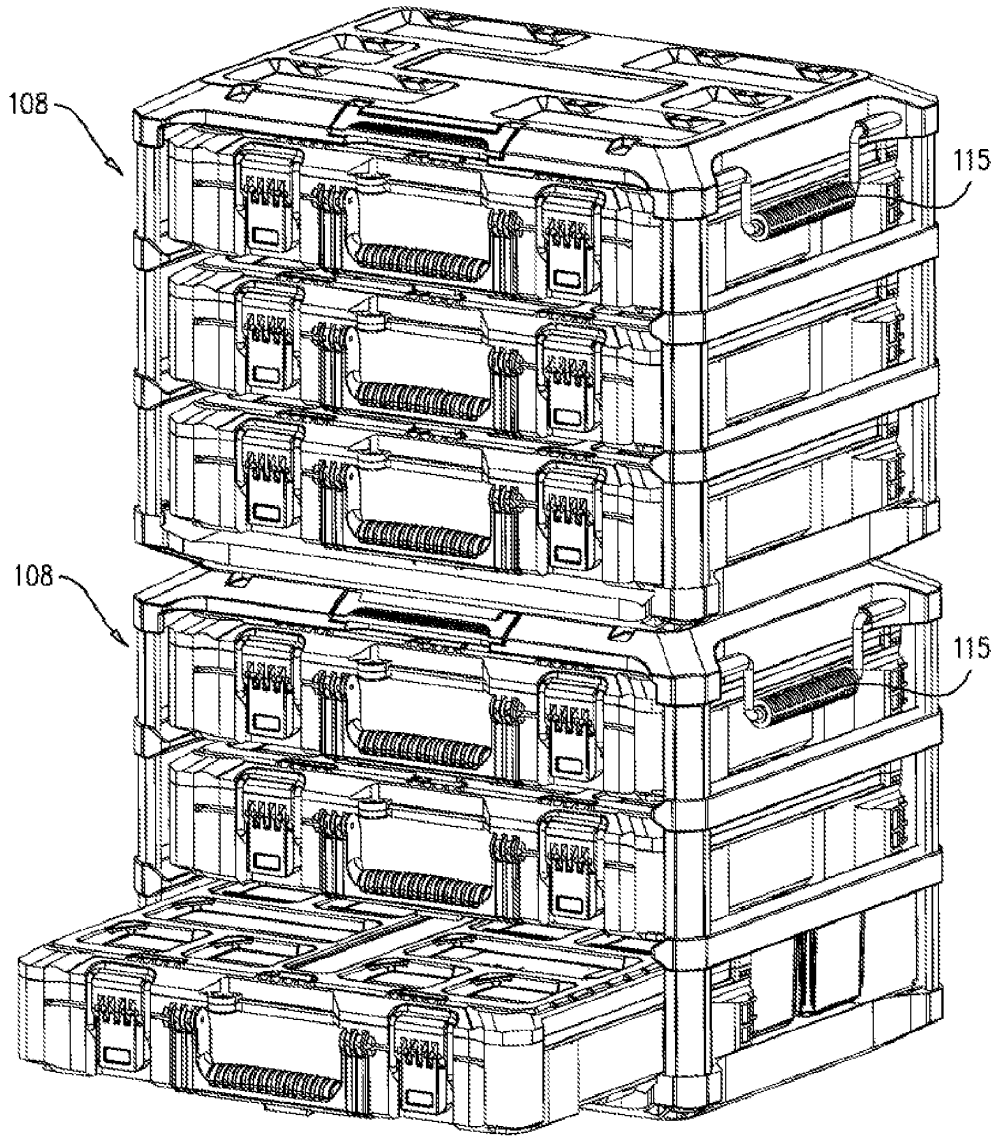

FIG. 6F

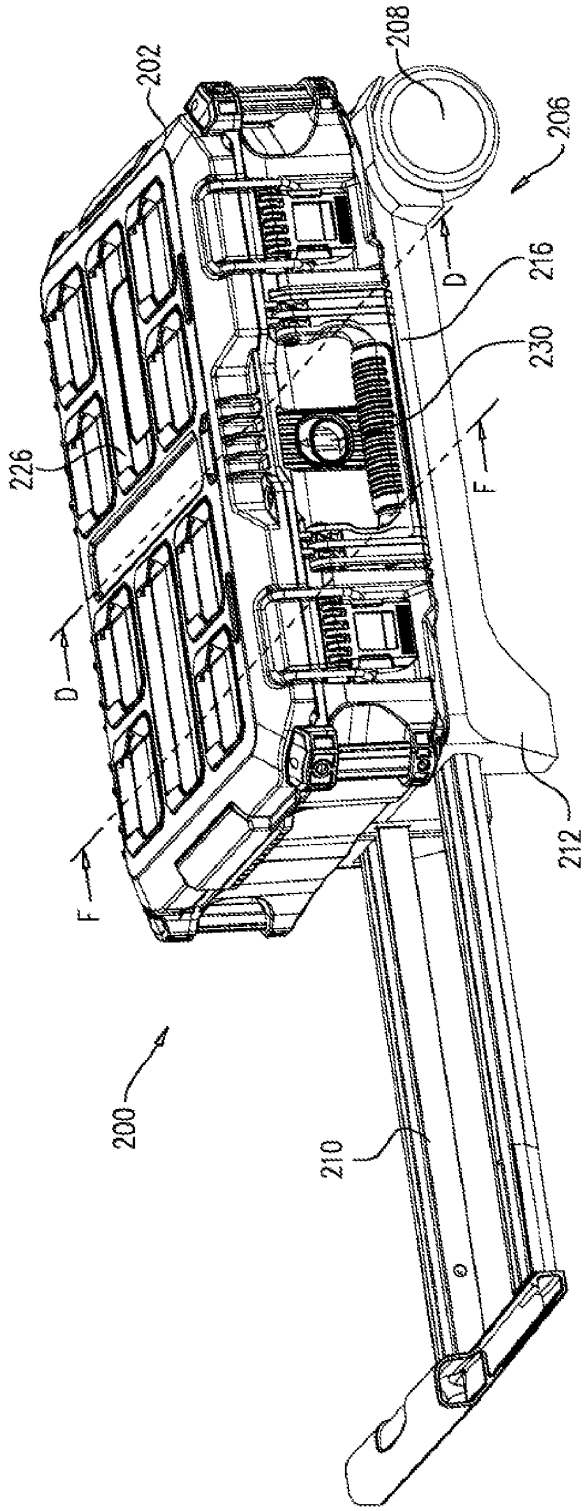

FIG. 7A

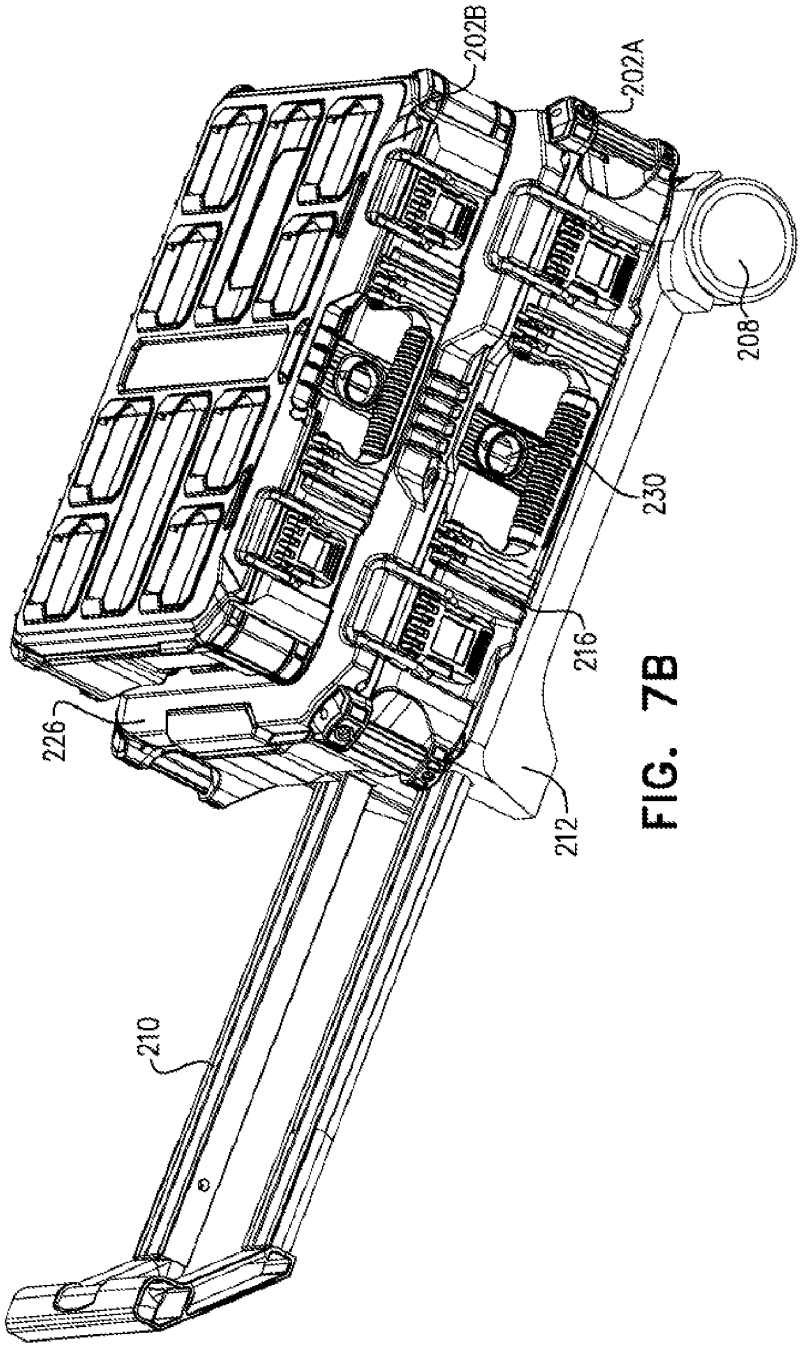

FIG. 7B

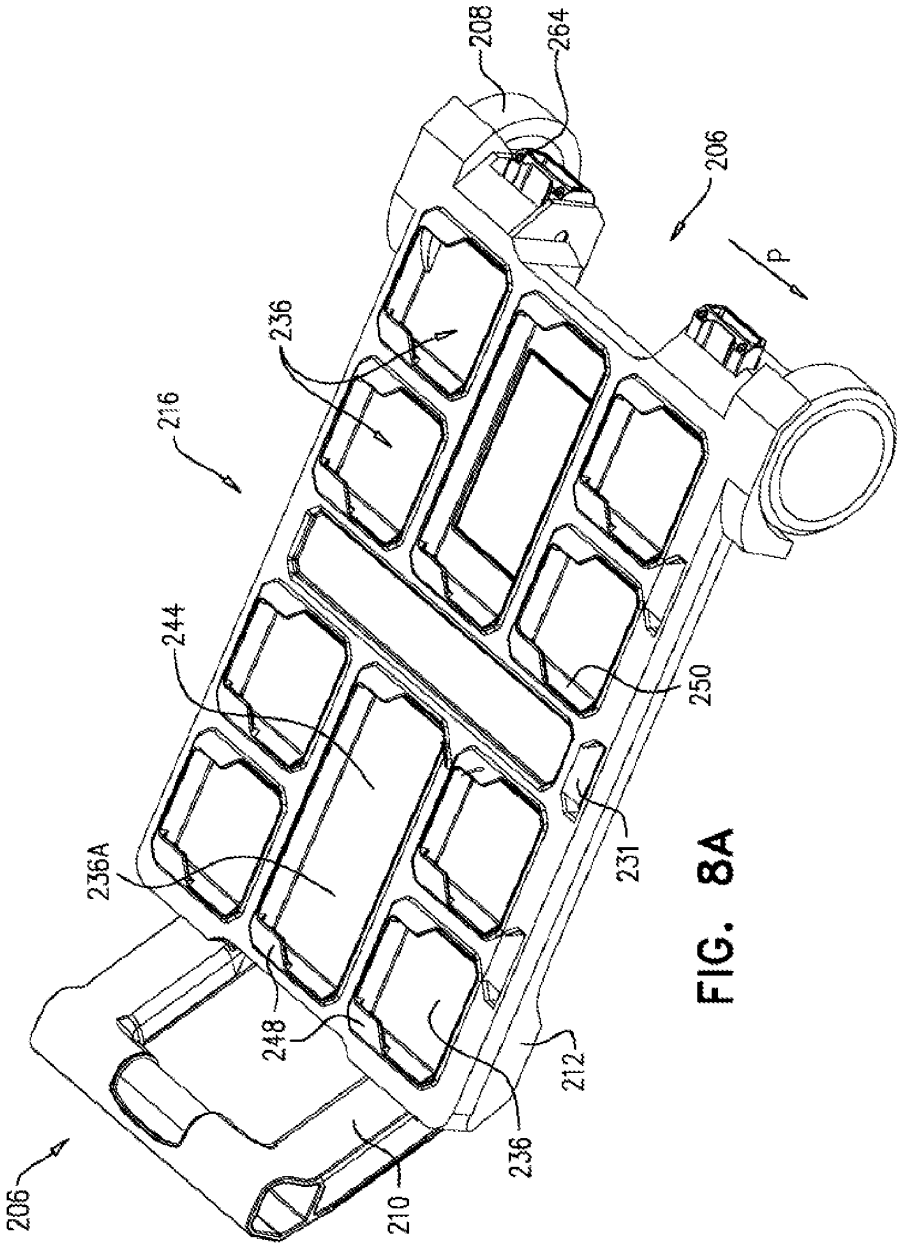

FIG. 8A

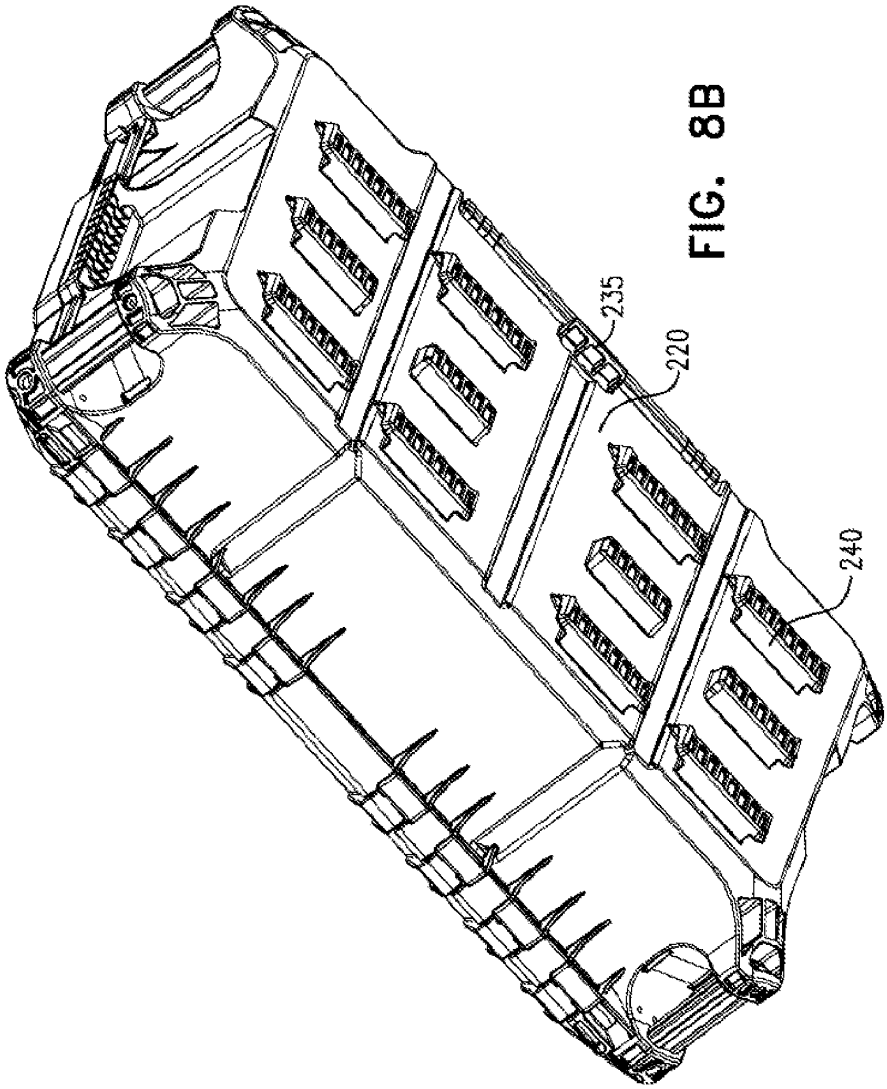

FIG. 8B

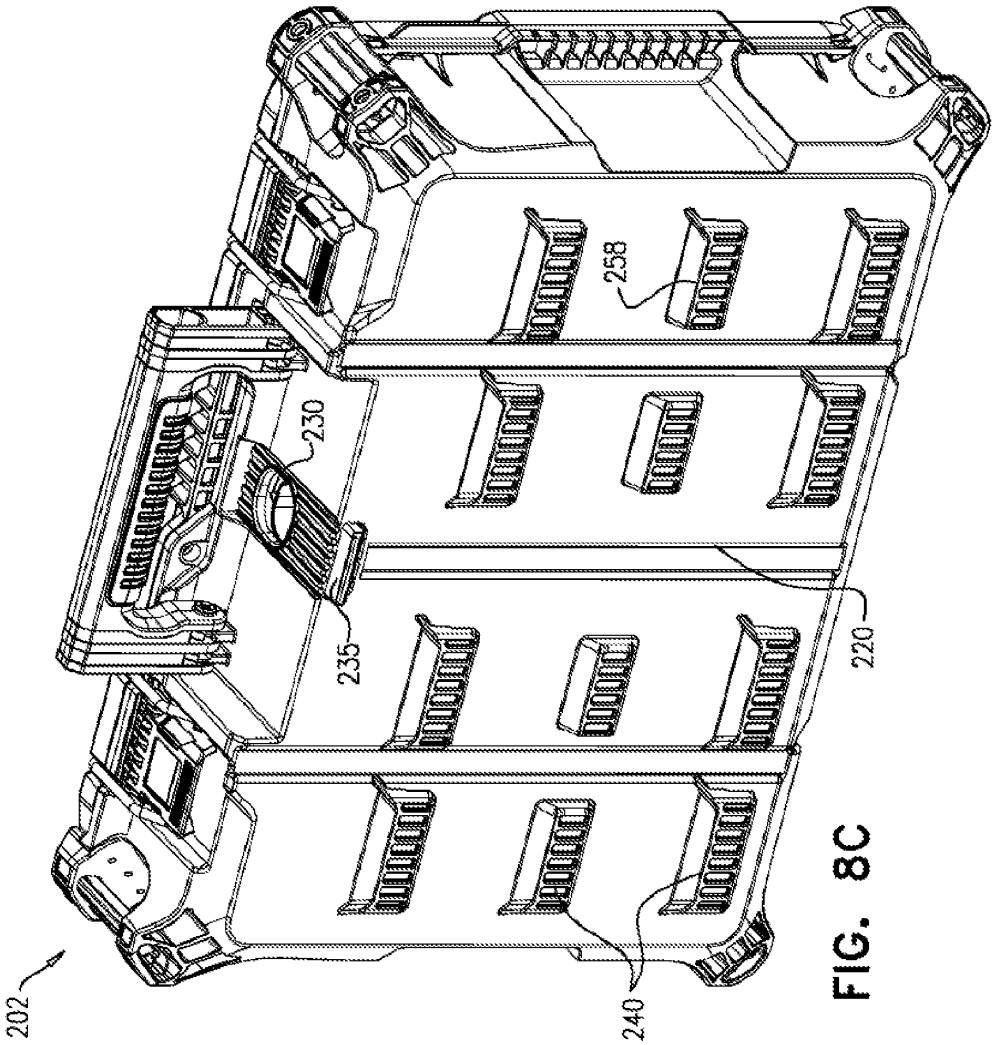

FIG. 8C

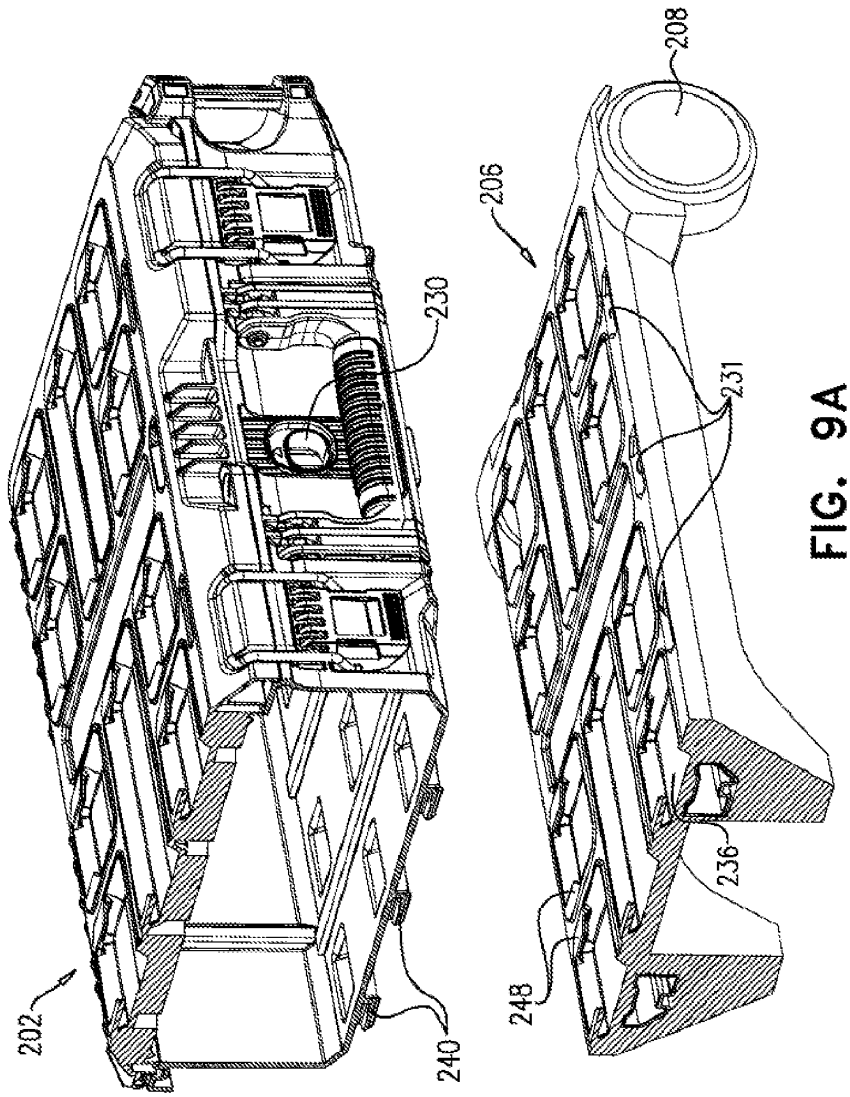

FIG. 9A

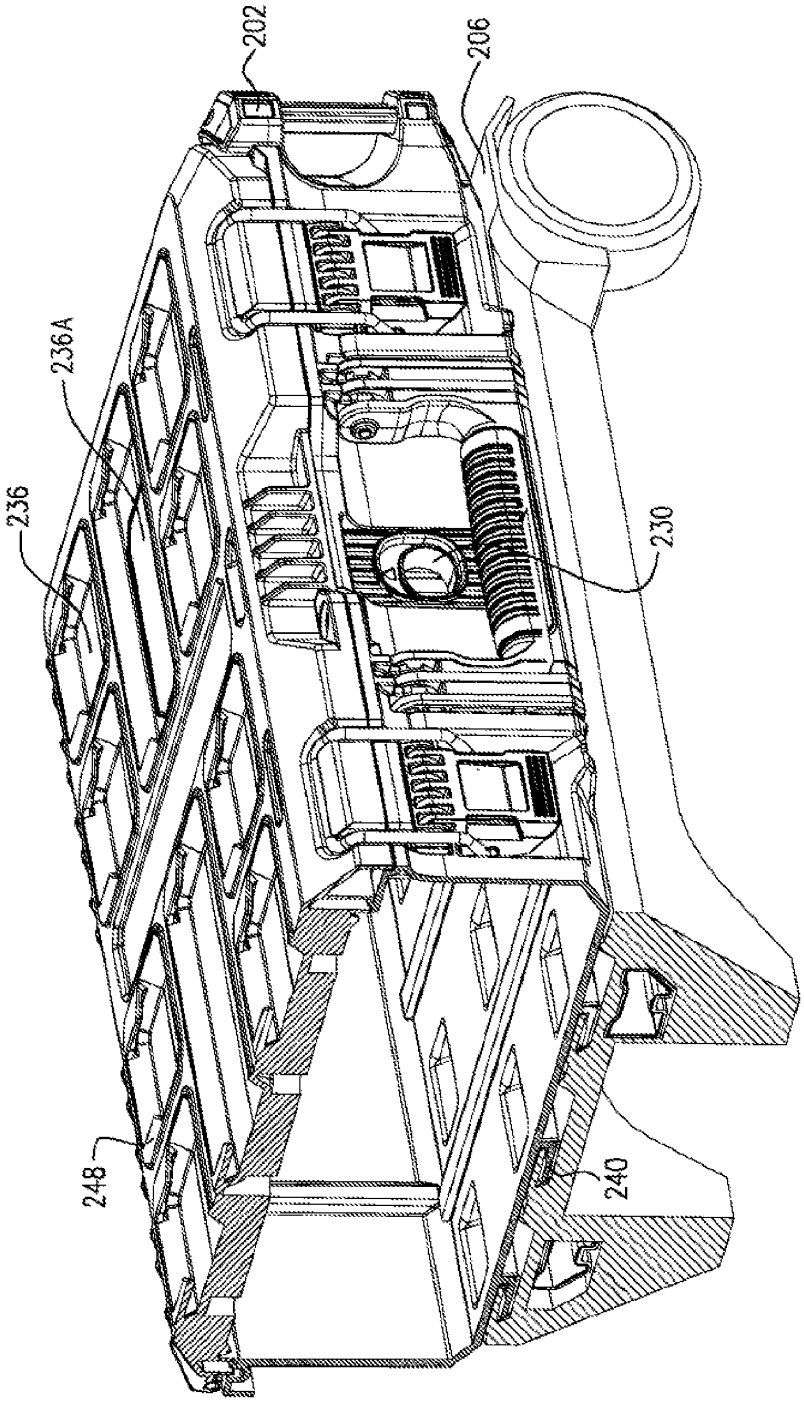

FIG. 9B

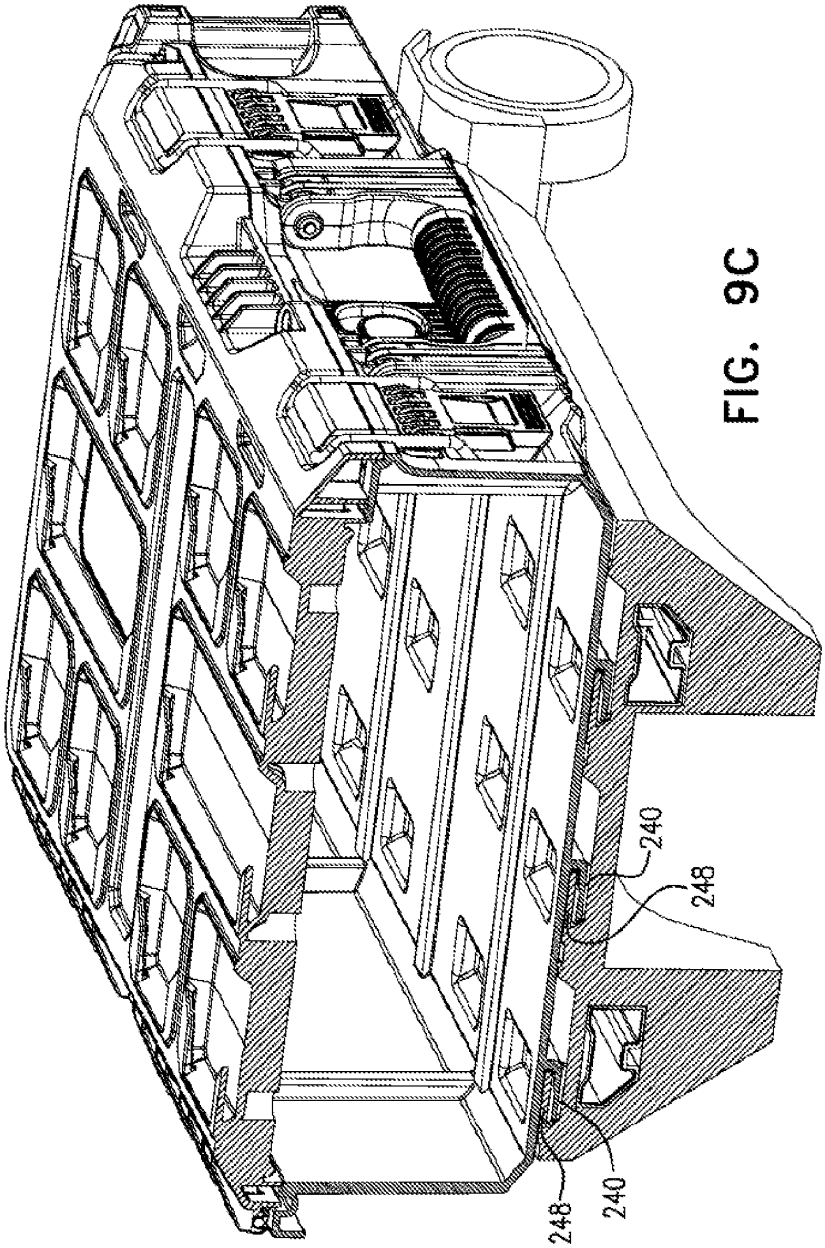

FIG. 9C

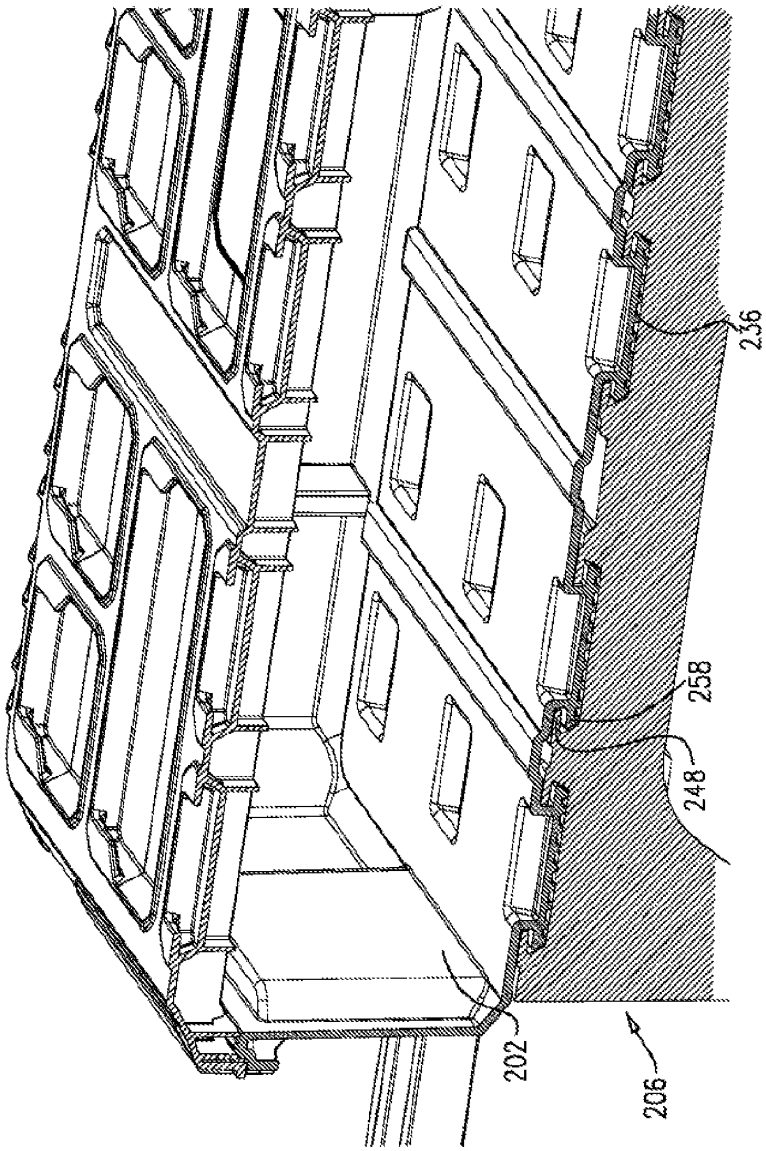

FIG. 9D

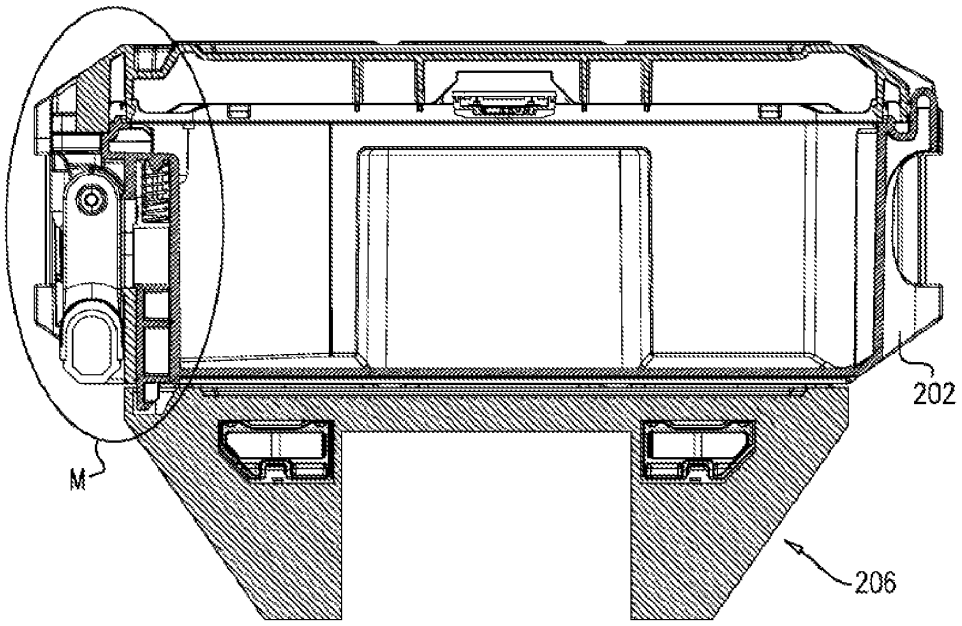

FIG. 10A

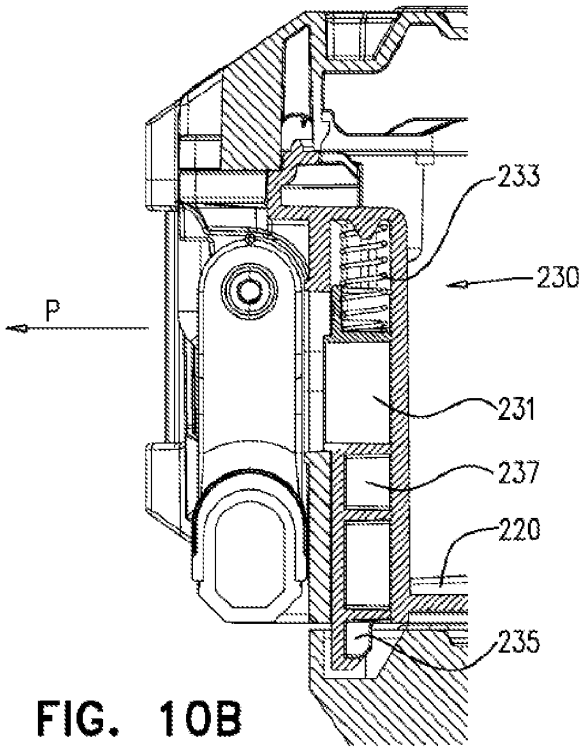

FIG. 10B

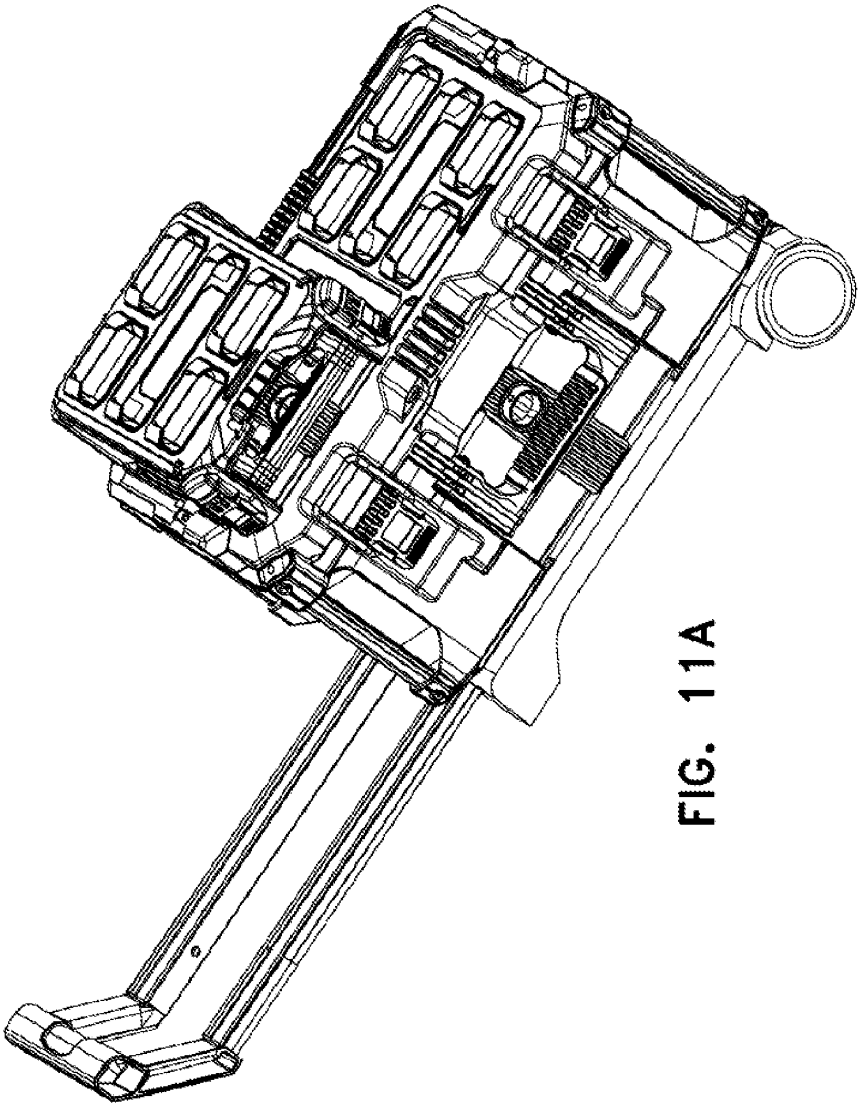

FIG. 11A

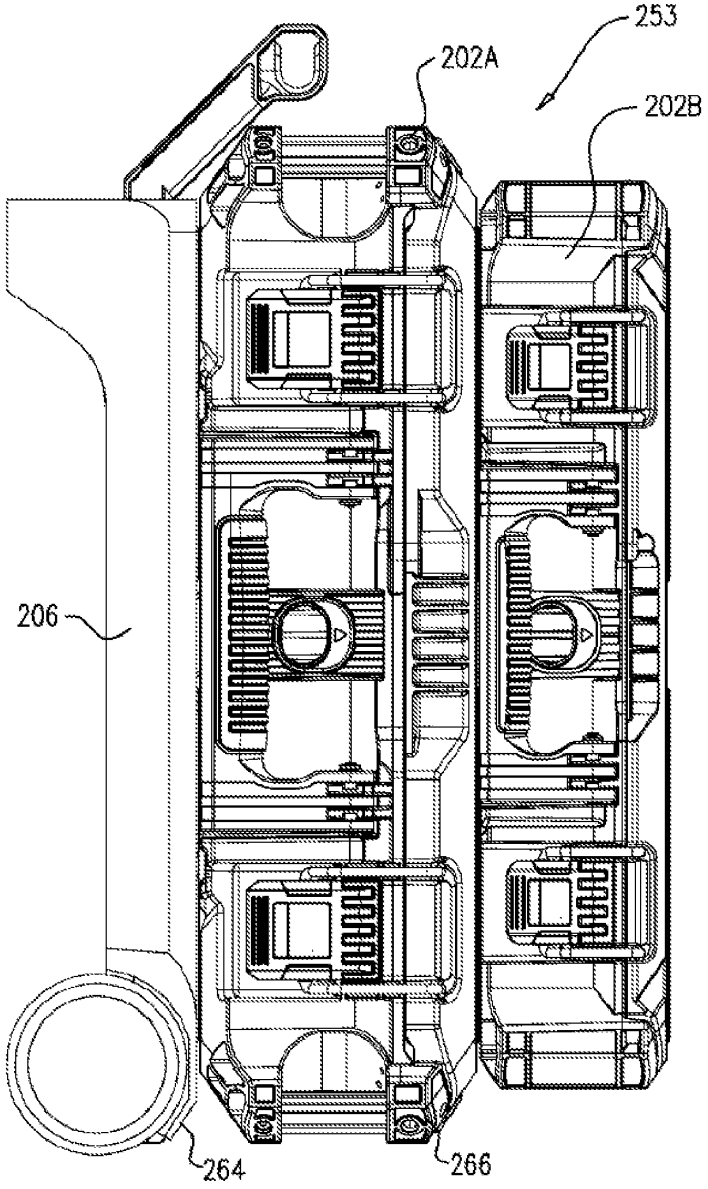

FIG. 11B

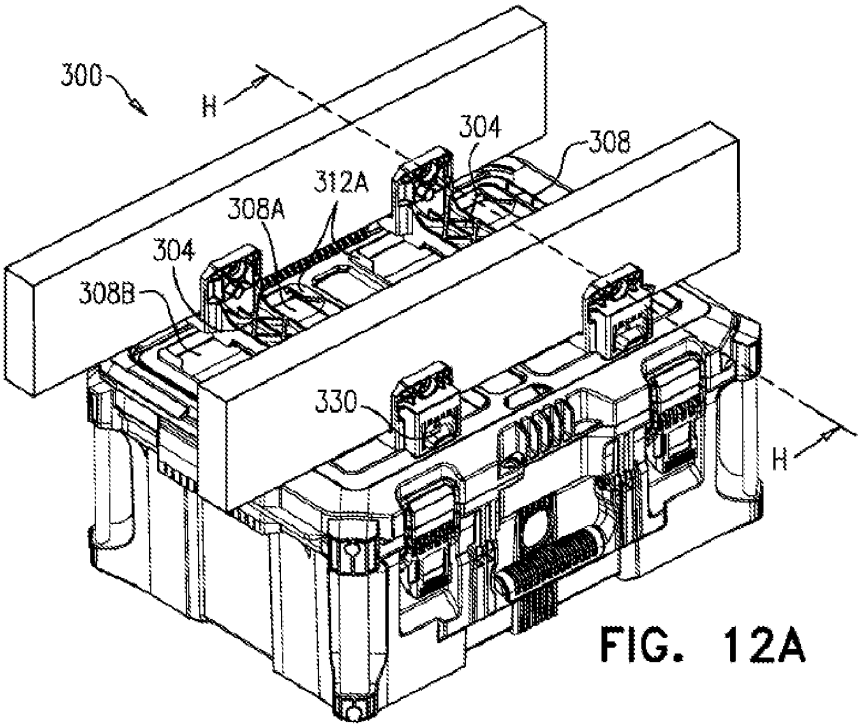

FIG. 12A

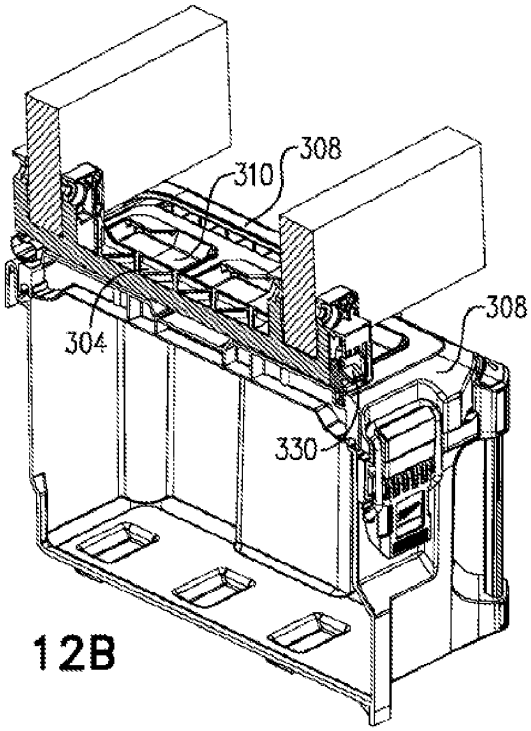

FIG. 12B

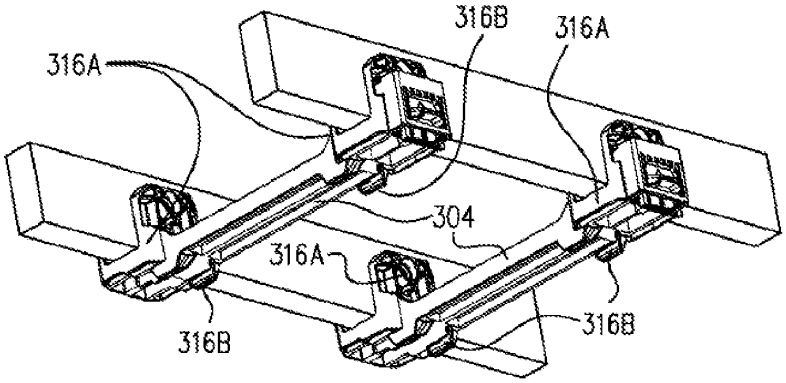
316B
316A
316A
304
316A
316B
316B

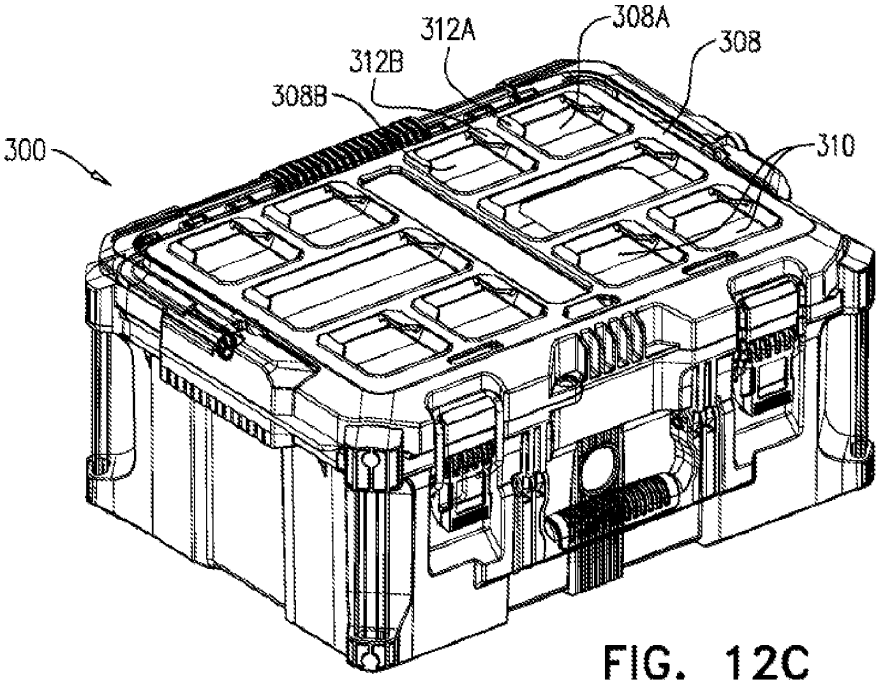
312A
308A
308
312B
308B
300
310

FIG. 12C

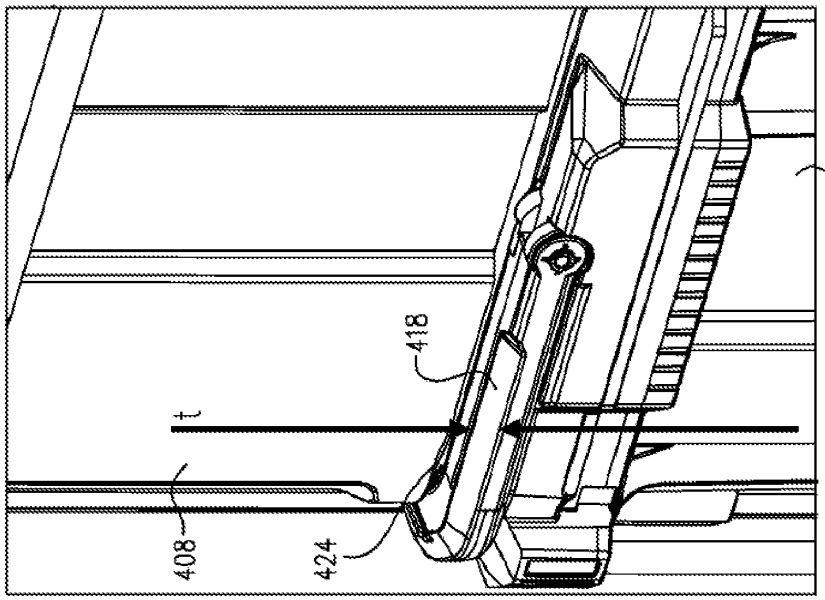

FIG. 13B

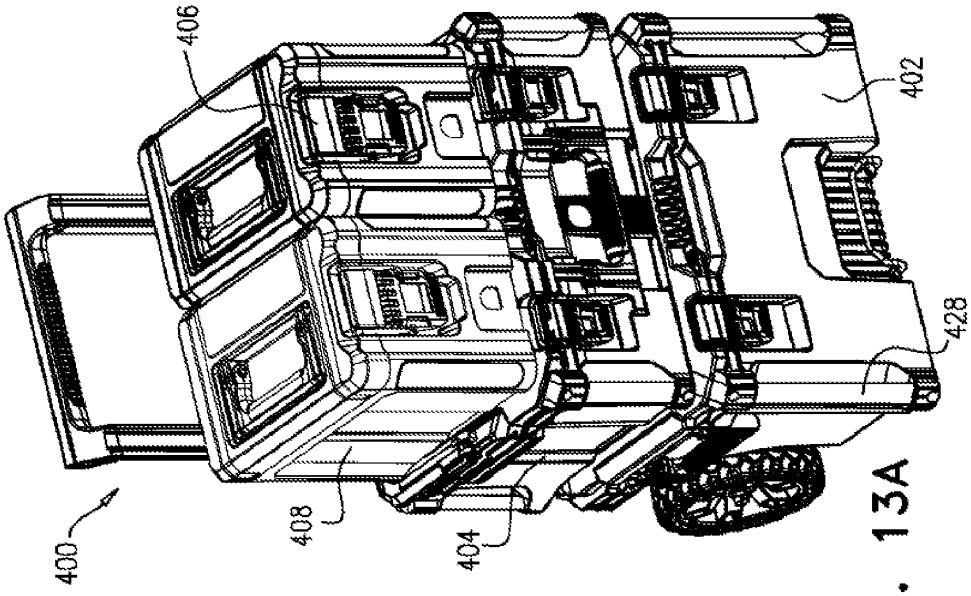

FIG. 13A

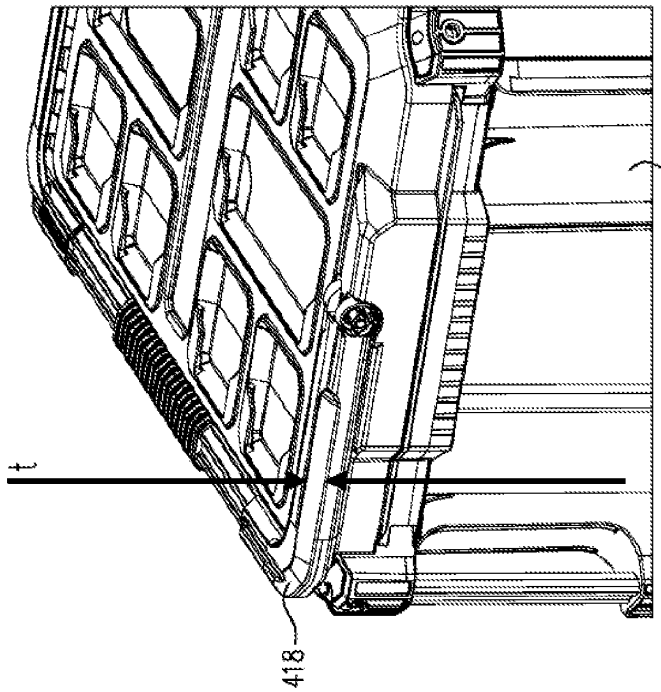

FIG. 13D

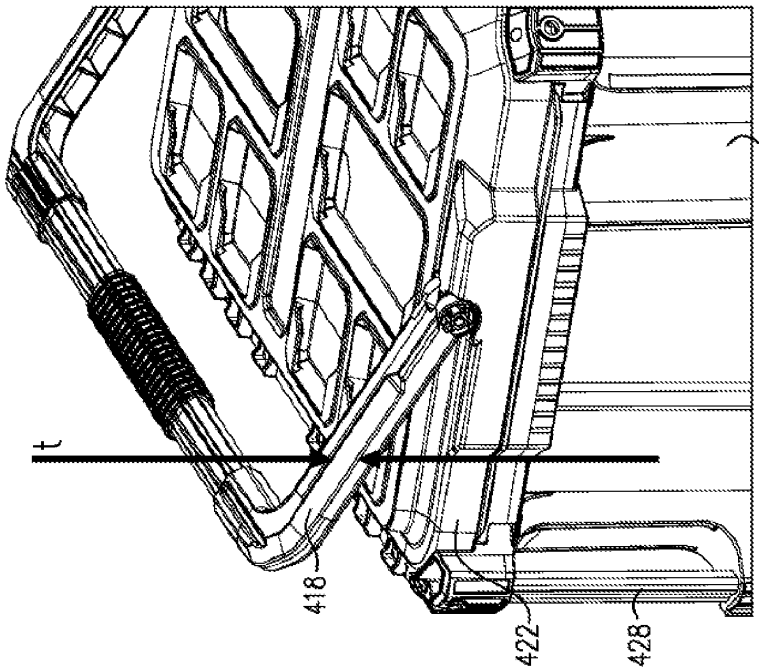

FIG. 13C

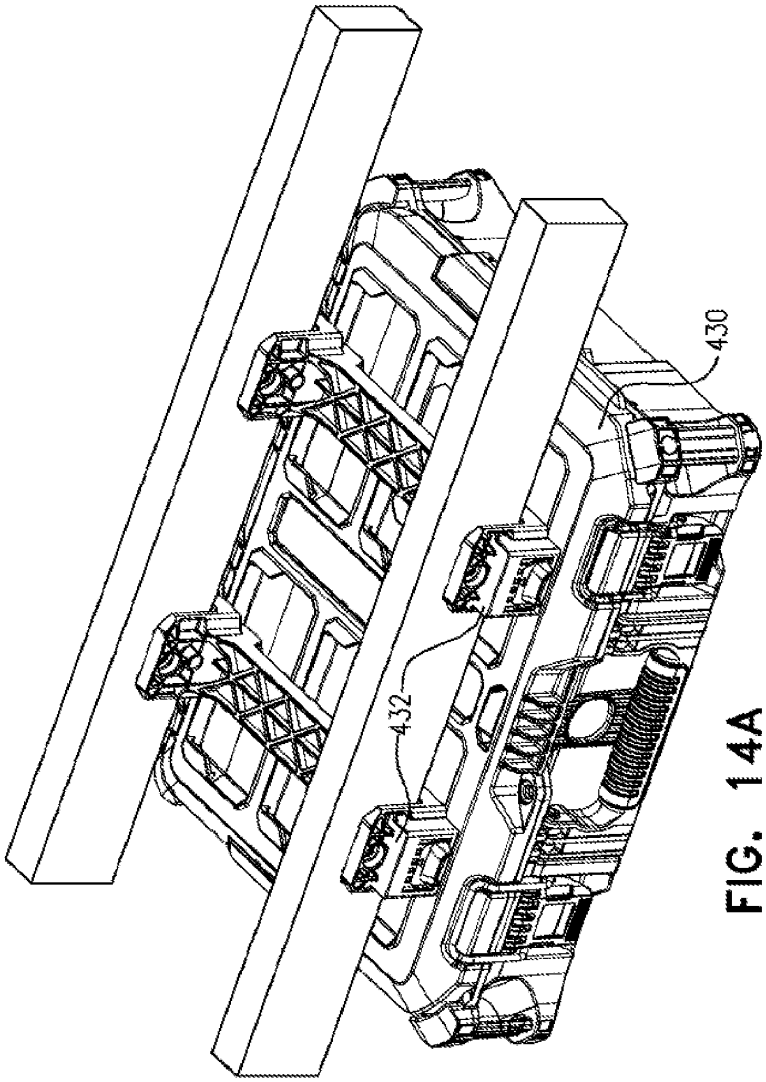

FIG. 14A

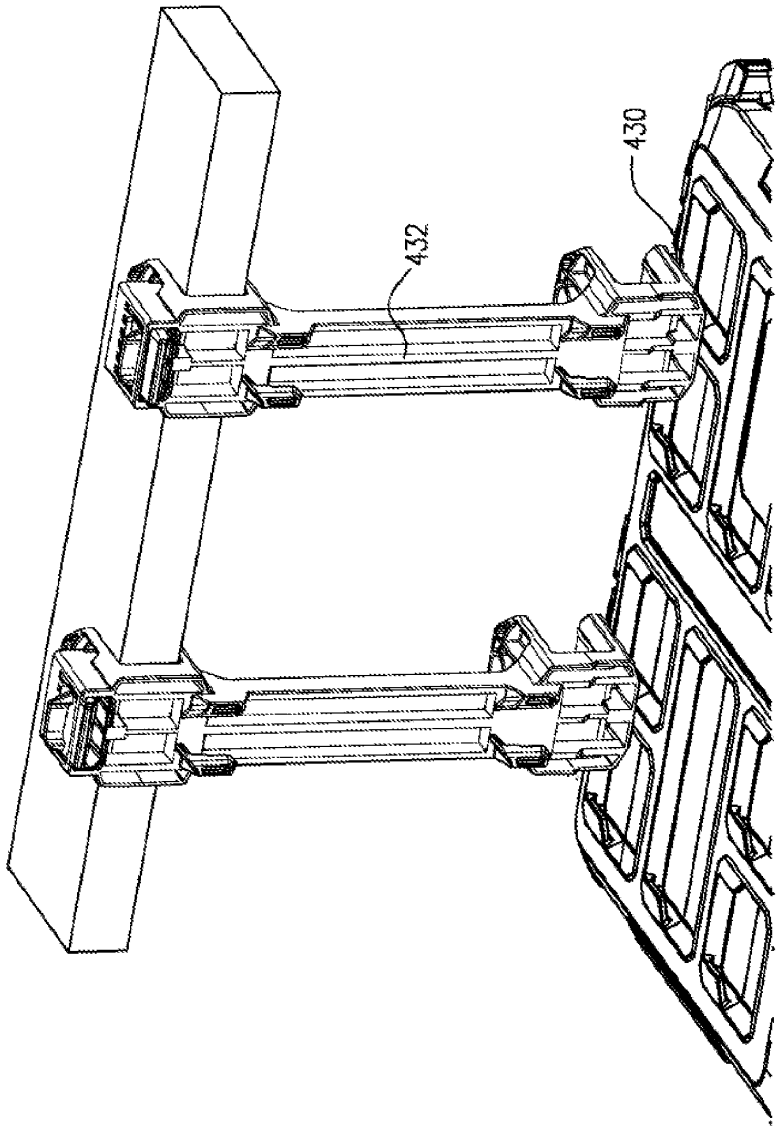

FIG. 14B

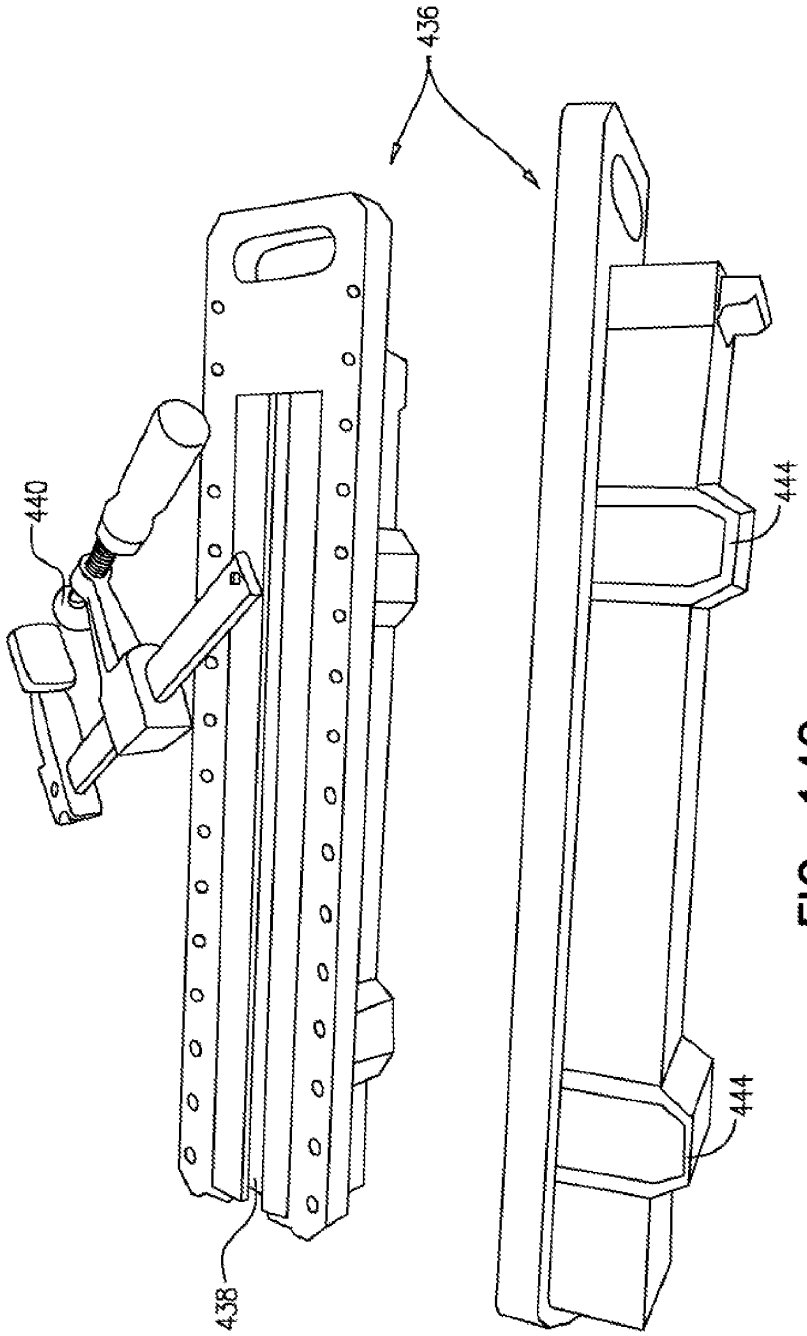

FIG. 14C

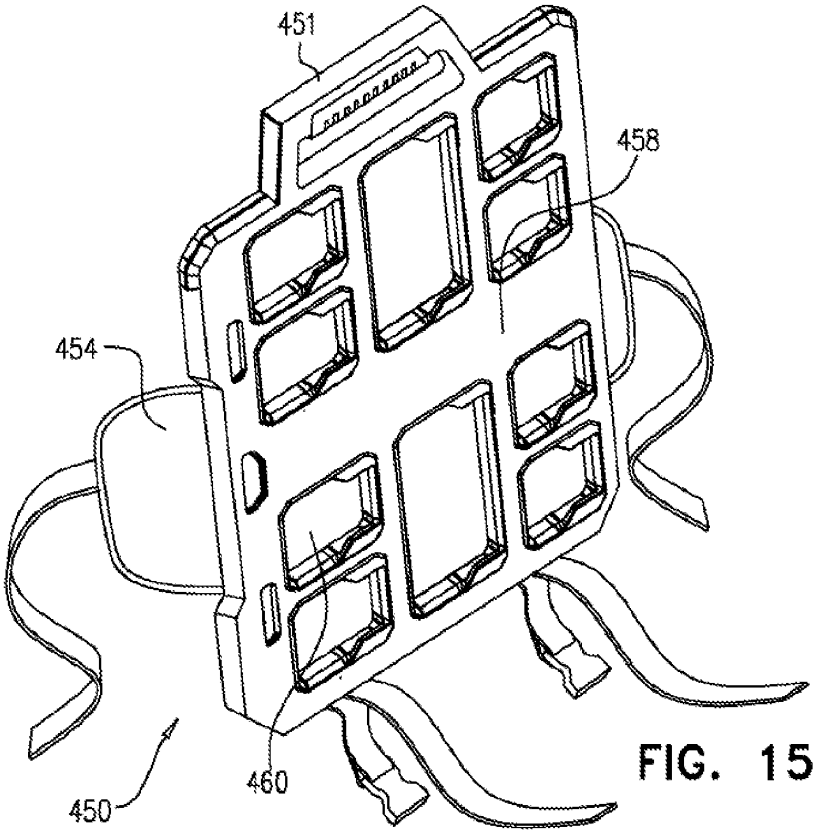

FIG. 15A

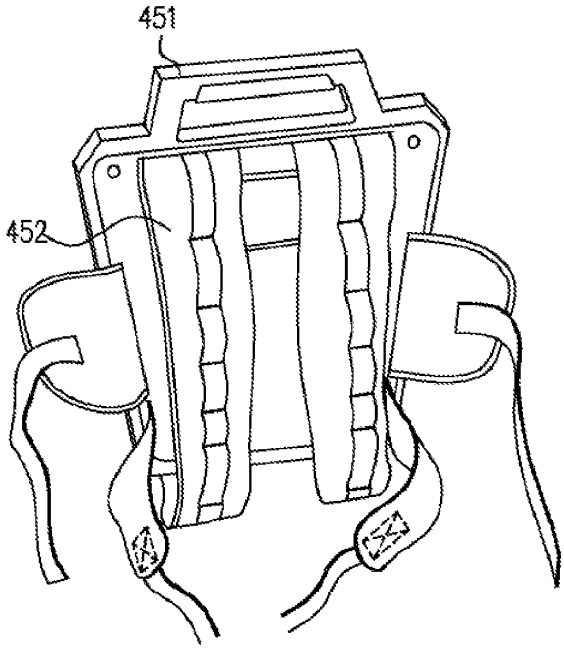

FIG. 15B

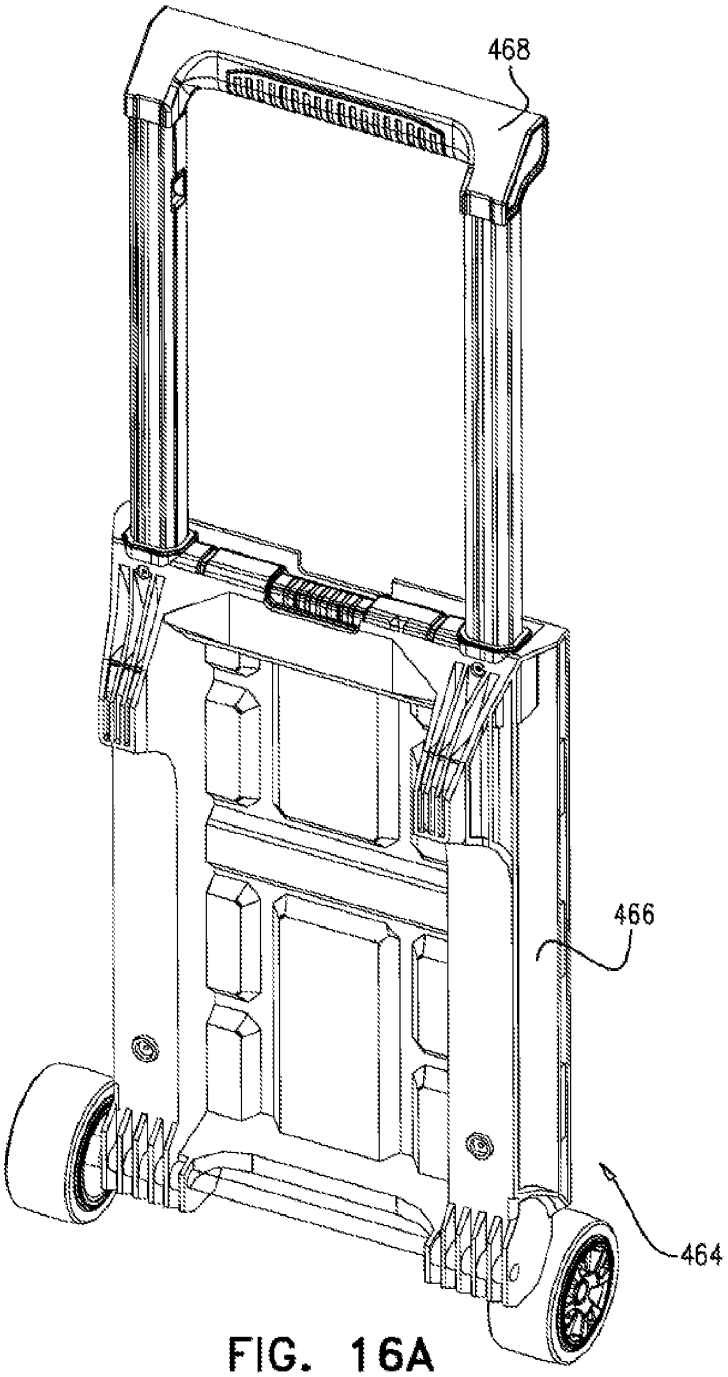

FIG. 16A

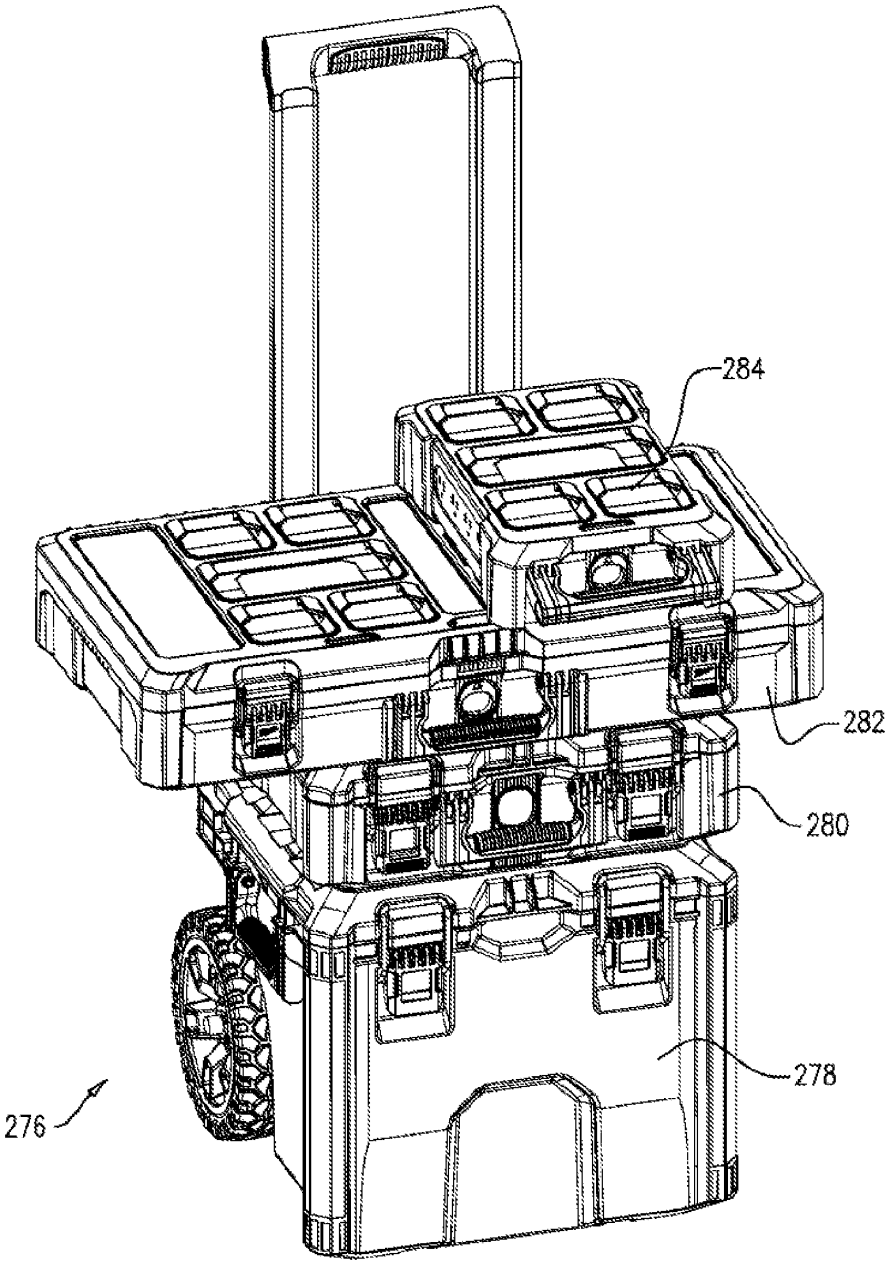

FIG. 16B

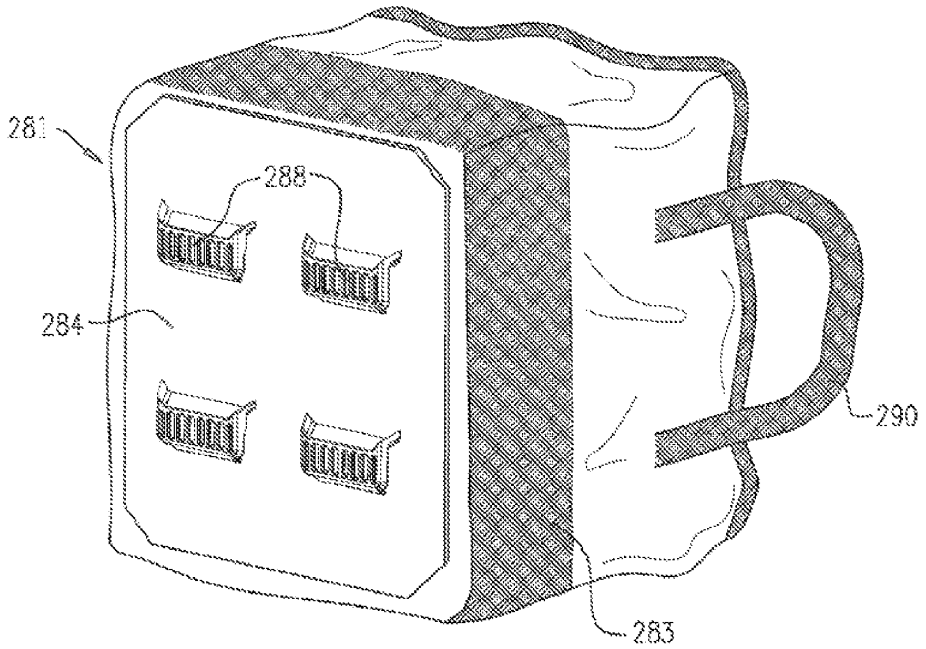

FIG. 17

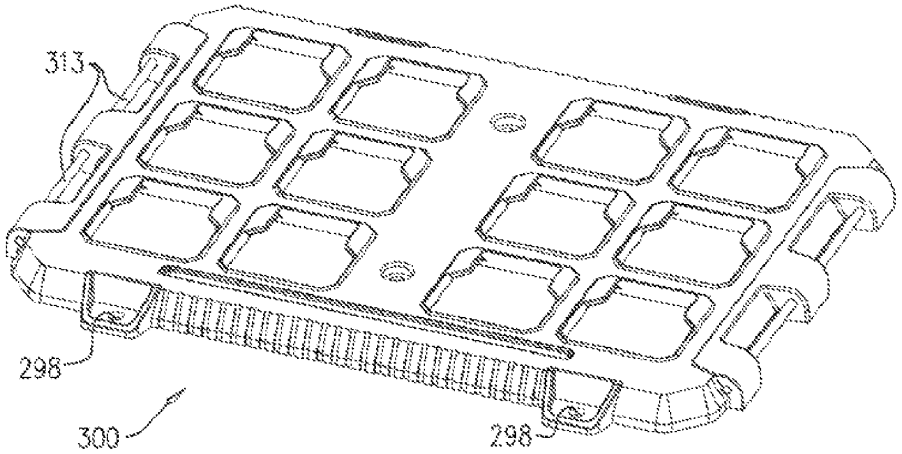

FIG. 18A

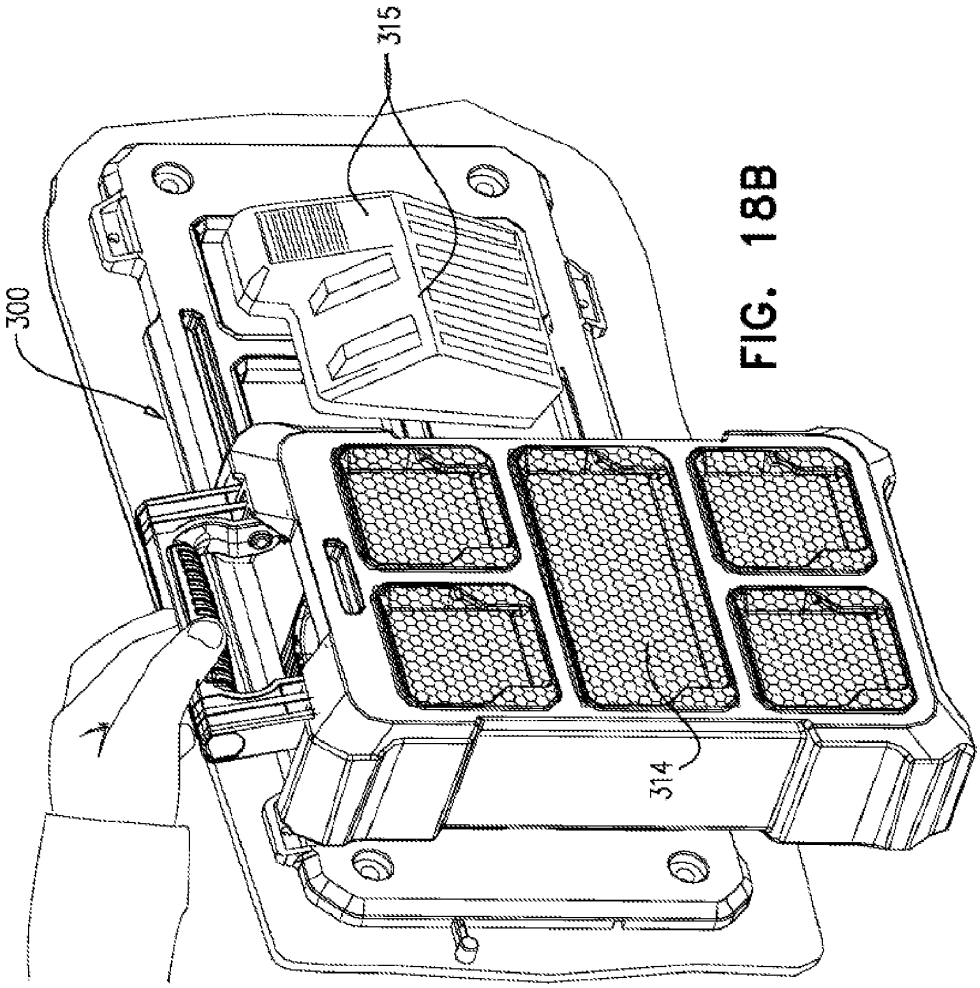

FIG. 18B

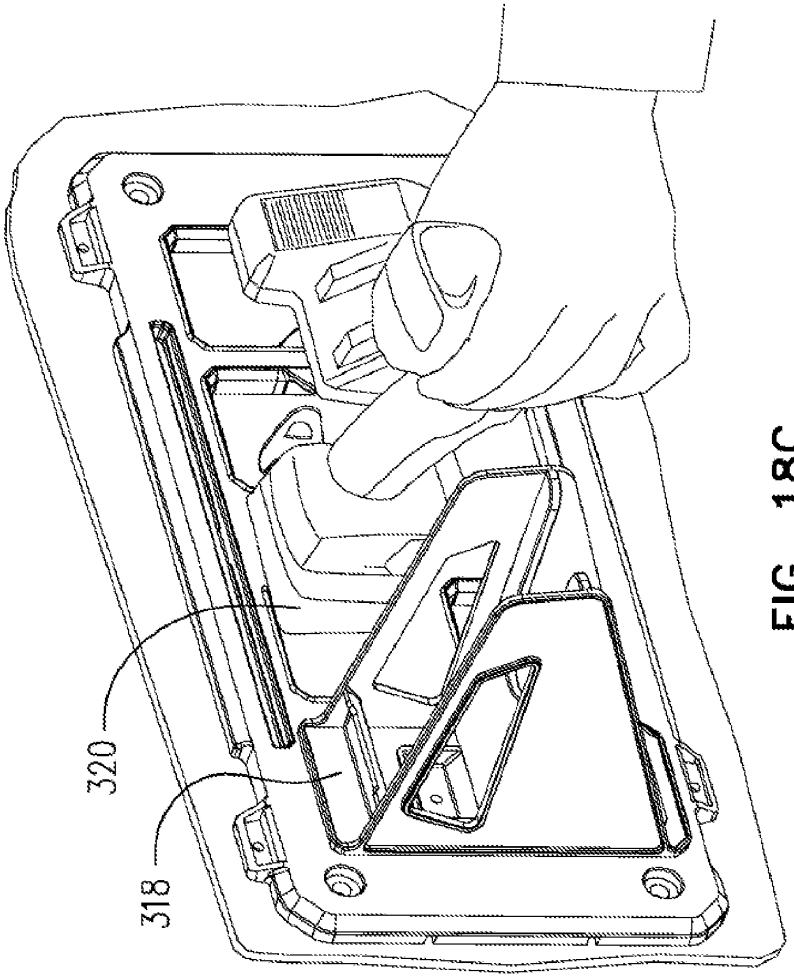

FIG. 18C

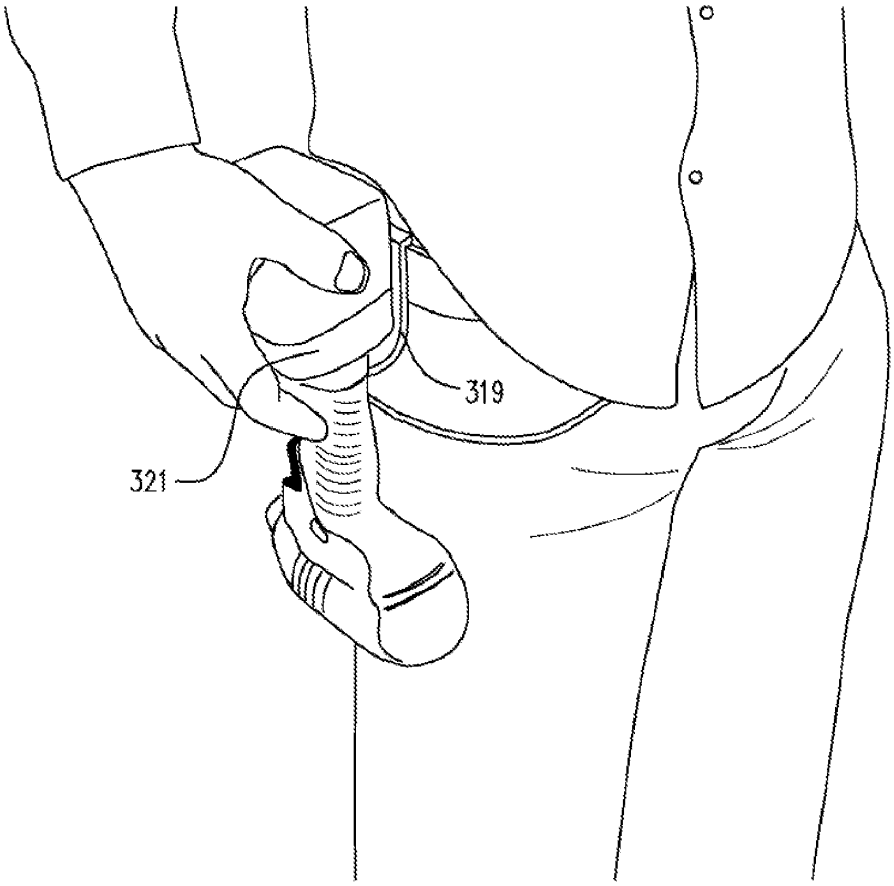

FIG. 19

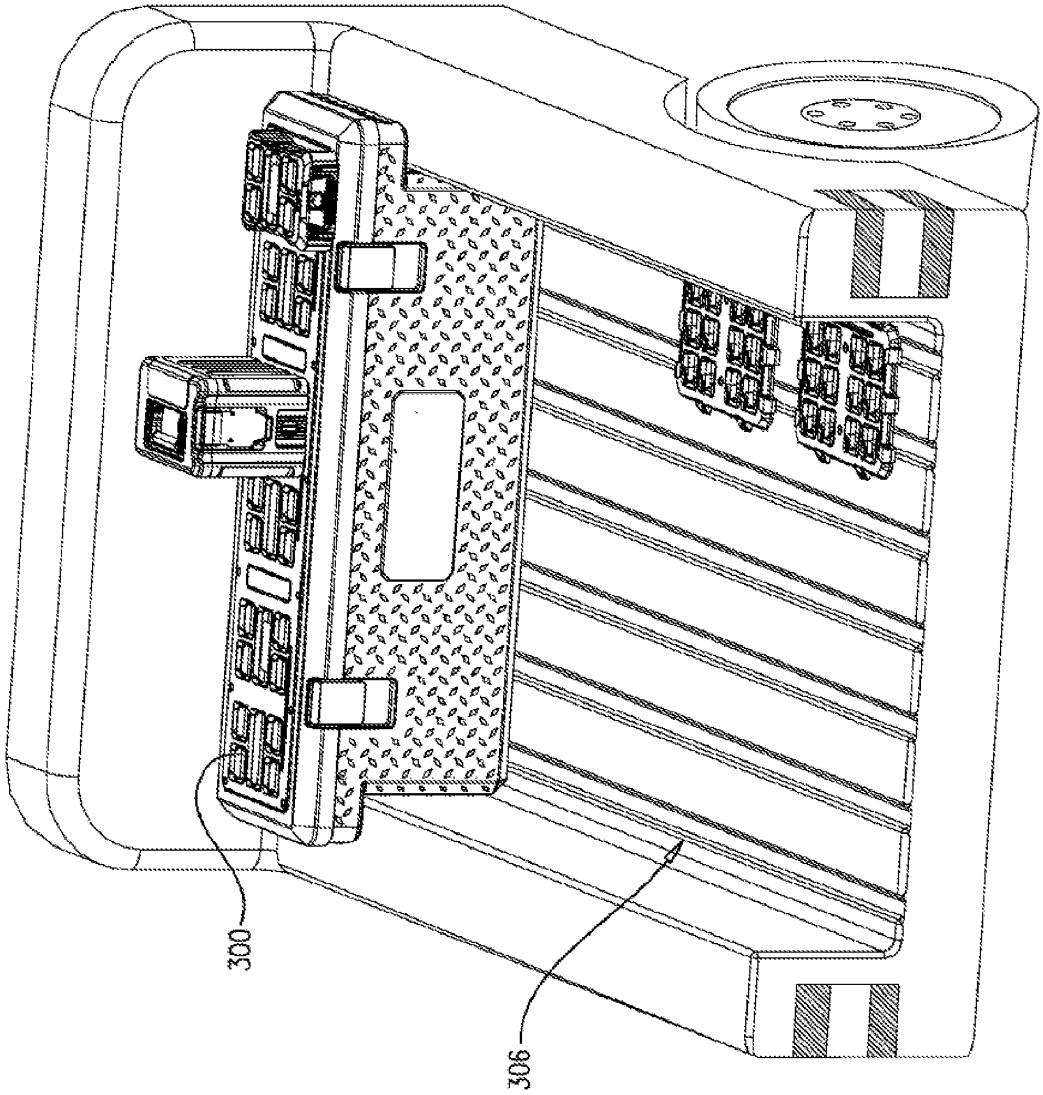

FIG. 20

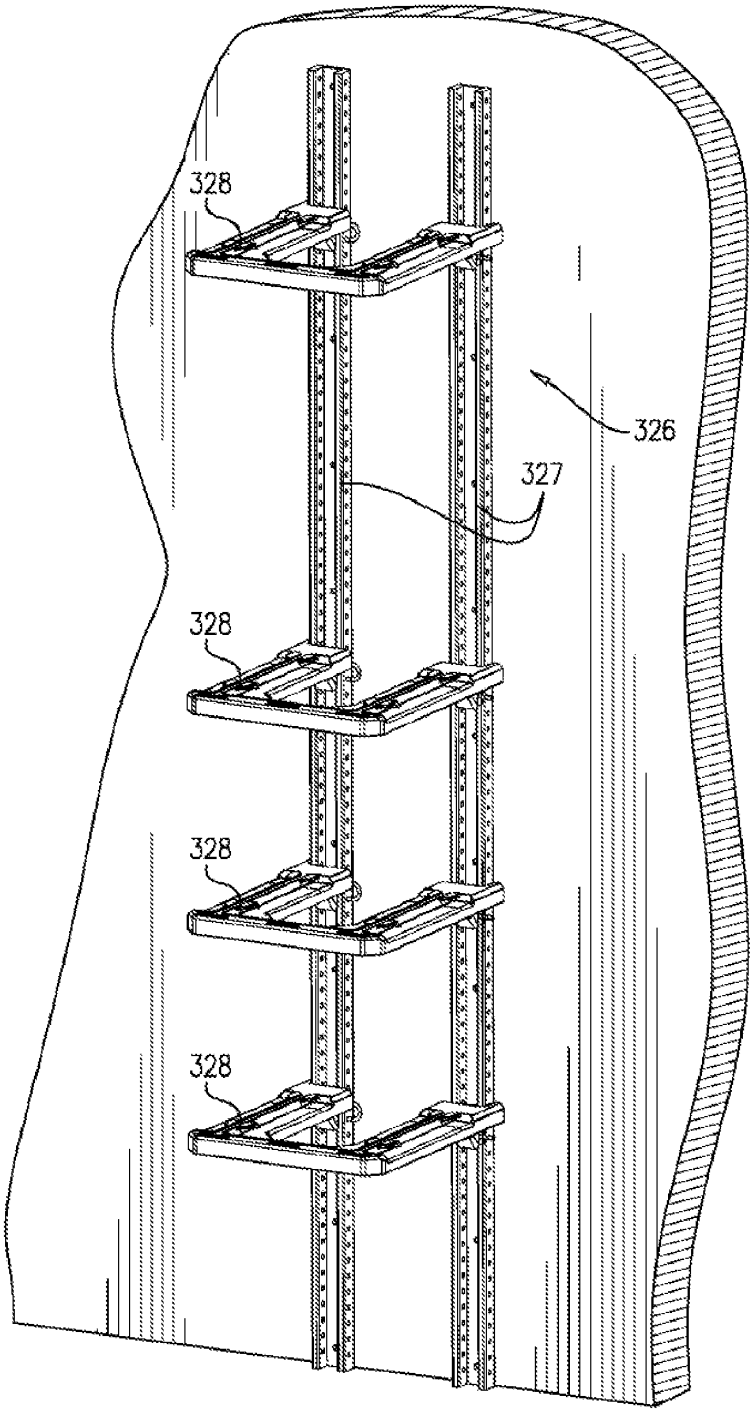

FIG. 21

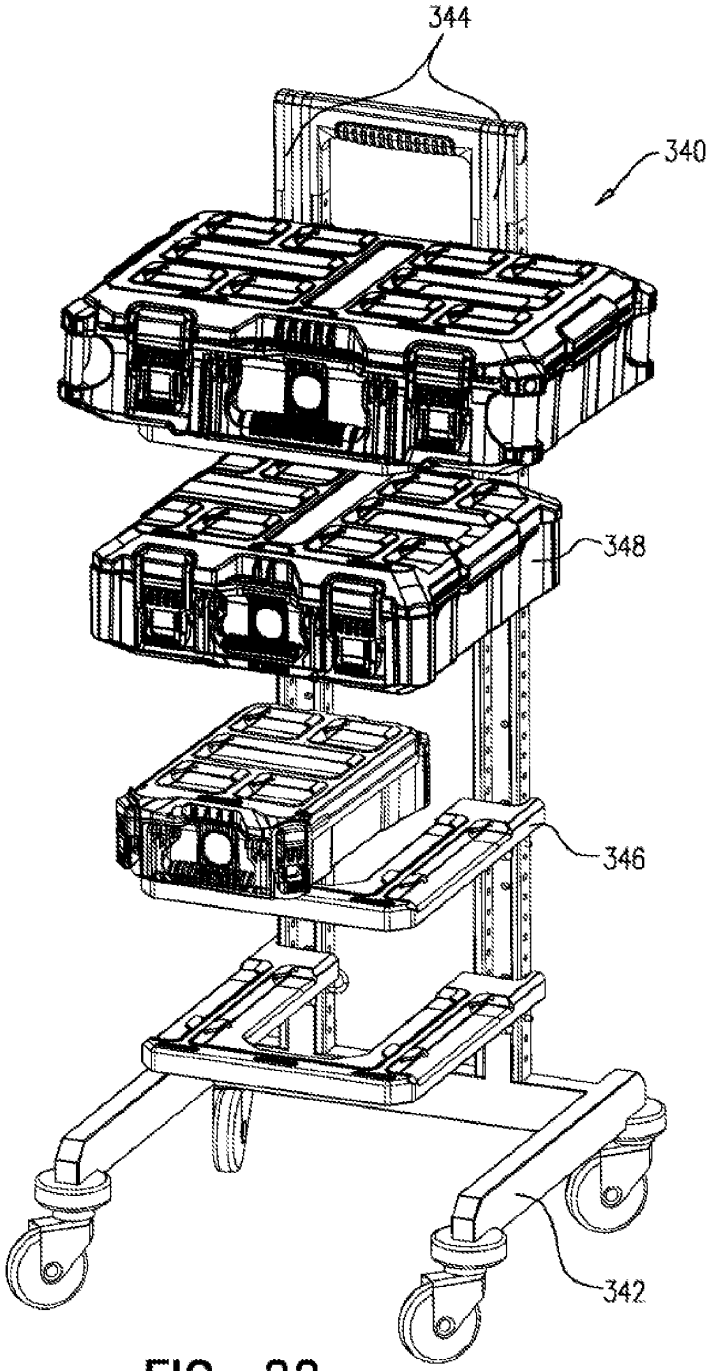

FIG. 22

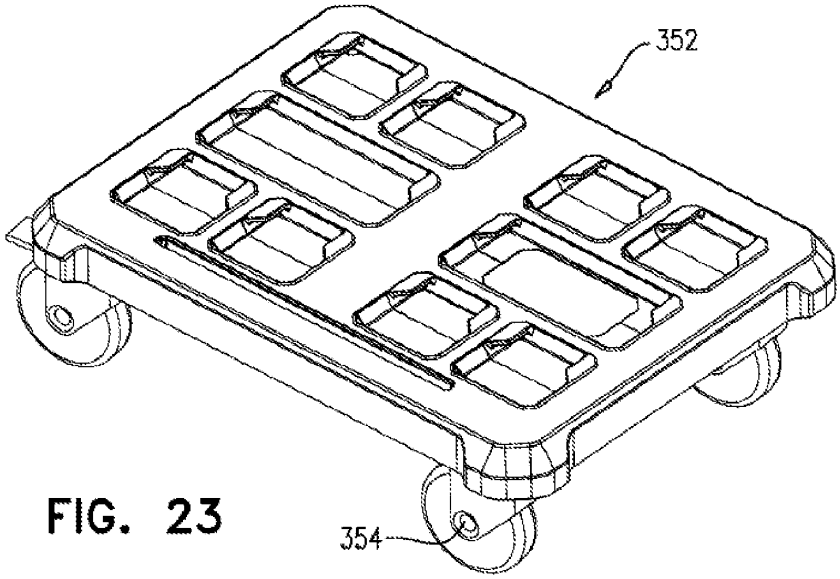

FIG. 23

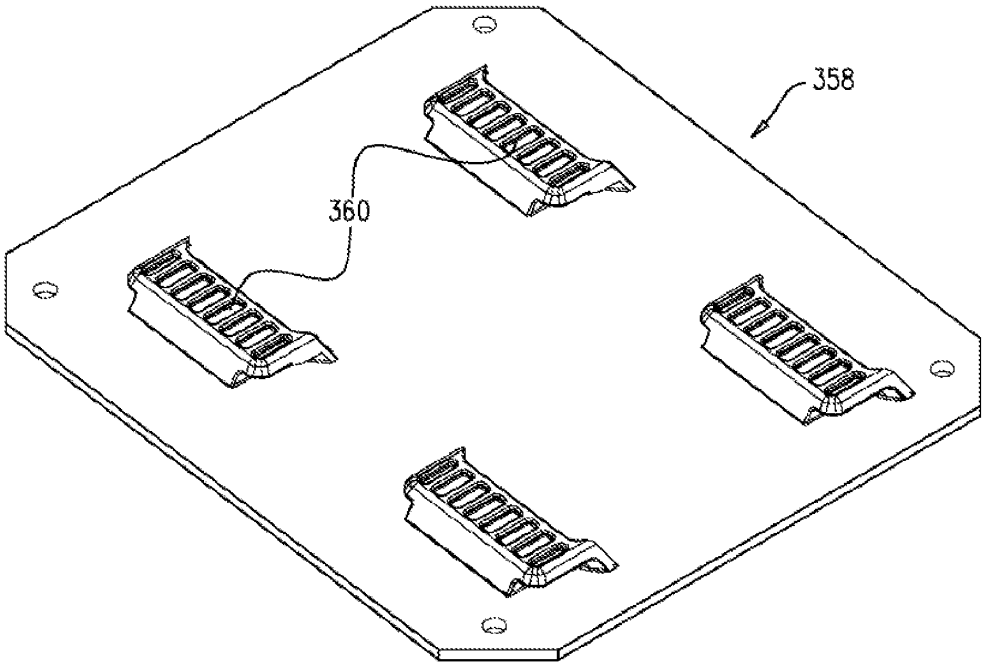

FIG. 24

Attorney Docket No.: 55390-501C01US (2517034)
US Application No.: 15/826,232

COMBINED DECLARATION AND ASSIGNMENT

Title of Invention: UTILITY ASSEMBLY AND COUPLING MECHANISM

This declaration and assignment is directed to:

☐ The attached or filed herewith application of (list of named inventors)_____,

or

☒ The United States application or PCT international application Number 15/826,232 filed on November 29, 2017.

Declaration

As the below named inventor, I hereby declare that:

The above-identified application ("Application") was made or authorized by me.

I believe that I am the original inventor or an original inventor of a claimed invention or discovery in the Application.

I have reviewed and understood the contents of the Application, including the claims, and I acknowledge the duty to disclose information which is material to patentability as defined in Title 37, the United States Code of Federal Regulations, §1.56 for filings of this Application in the United States of America.

I hereby acknowledge that any willful false statement made in this declaration is punishable under 18 U.S.C. § 1001 by fine or imprisonment of not more than five (5) years, or both for filings of this Application in the United States of America.

Assignment

MILWAUKEE ELECTRIC TOOL CORPORATION
13135 West Lisbon Road
Brookfield, WI 53005

a Delaware Corporation

(hereinafter designated as the "Assignee"),

☐ I hereby acknowledge that I have assigned the above-identified invention by previous assignment (attached hereto) to Assignee which is hereby conformed for recordation in the US Patent Office and I confirm I have and do assign and transfer:

or

☒ For good and valuable consideration, the sufficiency of which is acknowledged, I hereby assign and transfer and/or have assigned and transferred to Assignee:

my entire right, title, and interest in, to, and under the Application, including all priority rights for other countries arising therefrom and the right to claim priority to the Application, all inventions or discoveries therein disclosed, and any and all Letters Patent of the United States, European Patent Office and of all other countries, which may be granted for such inventions or discoveries, or any of them, all such inventions or discoveries and all rights in such Application including any and all provisionals, substitutions, divisions, and continuations thereof, and to all Letters Patent that may be granted for said inventions and discoveries, and in and to all extensions, supplementary protection certificates, reexaminations, renewals, and reissues thereof, to be held and enjoyed by Assignee for its own use and enjoyment to the full end of the term or terms for which such Letters Patent may be granted, as fully and entirely as the same would

have been held and enjoyed by me had this assignment and sale not been made.

I shall execute all papers necessary in connection with the Application in the United States Patent and Trademark Office, European Patent Office, any other patent offices, and under the Patent Cooperation Treaty, and any continuing, divisional, or reissue applications thereof, any reexamination of any of such applications, and any patent term extensions or supplementary protection certificates of any such applications and also to execute separate assignments in connection with such applications as the Assignee may deem necessary or expedient.

I shall execute all papers necessary in connection with any litigation or any other judicial proceeding in the United States or other country, or any administrative proceeding in the United States Patent and Trademark Office, European Patent Office, any other patent office, or under the Patent Cooperation Treaty concerning the Application(s) or any continuation, divisional, or reissue applications thereof, or any reexamination of any such applications, or any Letters Patent issued therefrom or any patent term extensions or supplementary protection certificates of any such applications and to cooperate with the Assignee in every way possible in obtaining evidence and going forward with such litigation or proceeding.

I shall execute all papers and documents and perform any act which may be necessary in connection with claims or provisions of the International Convention for Protection of Industrial Property or similar agreements.

I shall do all other acts which, in the opinion of Assignee, may be necessary or desirable to secure the grant of Letters Patent to Assignee or its nominees, in the United States, by the European Patent Office and in all other countries where Assignee may desire to have such inventions or discoveries, or any of them, patented, with specifications and claims in such form as shall be approved by Assignee and to vest and confirm in Assignee or its nominees the full and complete legal and equitable title to all such Letters Patent.

I hereby (i) authorize and request the Commissioner of Patents to issue any and all Letters Patent of the United States resulting from the Application or any divisional, continuation, or reissue applications thereof, and any reexamination of any of such applications, to Assignee, and (ii) covenant that I have full right to convey the interest herein assigned, and that I have not executed, and will not execute, any agreement in conflict herewith.

I hereby grant the attorney of record the power to insert on this assignment any further identification which may be necessary or desirable in order to obtain legal recordation of this document.

LEGAL NAME OF INVENTOR

Grant T. Squiers

Signature

9.5.18
Date

Milwaukee Electric Tool, Keter Home and Garden Products – Ex. 2003 - Page 1291
Klein Tools v. Milwaukee Electric Tool, Keter Home and Garden Products
IPR2024-01400

Attorney Docket No.: 55390-501C01US (2517034)
US Application No.: 15/826,232

COMBINED DECLARATION AND ASSIGNMENT

Title of Invention: UTILITY ASSEMBLY AND COUPLING MECHANISM

This declaration and assignment is directed to:

☐ The attached or filed herewith application of (list of named inventors)_____,

or

☒ The United States application or PCT international application Number 15/826,232 filed on November 29, 2017.

Declaration

As the below named inventor, I hereby declare that:

The above-identified application ("Application") was made or authorized by me.

I believe that I am the original inventor or an original inventor of a claimed invention or discovery in the Application.

I have reviewed and understood the contents of the Application, including the claims, and I acknowledge the duty to disclose information which is material to patentability as defined in Title 37, the United States Code of Federal Regulations, §1.56 for filings of this Application in the United States of America.

I hereby acknowledge that any willful false statement made in this declaration is punishable under 18 U.S.C. § 1001 by fine or imprisonment of not more than five (5) years, or both for filings of this Application in the United States of America.

Assignment

MILWAUKEE ELECTRIC TOOL CORPORATION
13135 West Lisbon Road
Brookfield, WI 53005

a Delaware Corporation

(hereinafter designated as the "Assignee"),

☐ I hereby acknowledge that I have assigned the above-identified invention by previous assignment (attached hereto) to Assignee which is hereby conformed for recordation in the US Patent Office and I confirm I have and do assign and transfer:

or

☒ For good and valuable consideration, the sufficiency of which is acknowledged, I hereby assign and transfer and/or have assigned and transferred to Assignee:

my entire right, title, and interest in, to, and under the Application, including all priority rights for other countries arising therefrom and the right to claim priority to the Application, all inventions or discoveries therein disclosed, and any and all Letters Patent of the United States, European Patent Office and of all other countries, which may be granted for such inventions or discoveries, or any of them, all such inventions or discoveries and all rights in such Application including any and all provisionals, substitutions, divisions, and continuations thereof, and to all Letters Patent that may be granted for said inventions and discoveries, and in and to all extensions, supplementary protection certificates, reexaminations, renewals, and reissues thereof, to be held and enjoyed by Assignee for its own use and enjoyment to the full end of the term or terms for which such Letters Patent may be granted, as fully and entirely as the same would

have been held and enjoyed by me had this assignment and sale not been made.

I shall execute all papers necessary in connection with the Application in the United States Patent and Trademark Office, European Patent Office, any other patent offices, and under the Patent Cooperation Treaty, and any continuing, divisional, or reissue applications thereof, any reexamination of any of such applications, and any patent term extensions or supplementary protection certificates of any such applications and also to execute separate assignments in connection with such applications as the Assignee may deem necessary or expedient.

I shall execute all papers necessary in connection with any litigation or any other judicial proceeding in the United States or other country, or any administrative proceeding in the United States Patent and Trademark Office, European Patent Office, any other patent office, or under the Patent Cooperation Treaty concerning the Application(s) or any continuation, divisional, or reissue applications thereof, or any reexamination of any such applications, or any Letters Patent issued therefrom or any patent term extensions or supplementary protection certificates of any such applications and to cooperate with the Assignee in every way possible in obtaining evidence and going forward with such litigation or proceeding.

I shall execute all papers and documents and perform any act which may be necessary in connection with claims or provisions of the International Convention for Protection of Industrial Property or similar agreements.

I shall do all other acts which, in the opinion of Assignee, may be necessary or desirable to secure the grant of Letters Patent to Assignee or its nominees, in the United States, by the European Patent Office and in all other countries where Assignee may desire to have such inventions or discoveries, or any of them, patented, with specifications and claims in such form as shall be approved by Assignee and to vest and confirm in Assignee or its nominees the full and complete legal and equitable title to all such Letters Patent.

I hereby (i) authorize and request the Commissioner of Patents to issue any and all Letters Patent of the United States resulting from the Application or any divisional, continuation, or reissue applications thereof, and any reexamination of any of such applications, to Assignee, and (ii) covenant that I have full right to convey the interest herein assigned, and that I have not executed, and will not execute, any agreement in conflict herewith.

I hereby grant the attorney of record the power to insert on this assignment any further identification which may be necessary or desirable in order to obtain legal recordation of this document.

LEGAL NAME OF INVENTOR

Christopher S. Hoppe

Signature

Date

80343876v.1

Attorney Docket No.: 55390-501C01US (2517034)
US Application No.: 15/826,232

COMBINED DECLARATION AND ASSIGNMENT

Title of Invention: UTILITY ASSEMBLY AND COUPLING MECHANISM

This declaration and assignment is directed to:

☐ The attached or filed herewith application of (list of named inventors)_____,

or

☒ The United States application or PCT international application Number 15/826,232 filed on November 29, 2017.

Declaration

As the below named inventor, I hereby declare that:

The above-identified application ("Application") was made or authorized by me.

I believe that I am the original inventor or an original inventor of a claimed invention or discovery in the Application.

I have reviewed and understood the contents of the Application, including the claims, and I acknowledge the duty to disclose information which is material to patentability as defined in Title 37, the United States Code of Federal Regulations, §1.56 for filings of this Application in the United States of America.

I hereby acknowledge that any willful false statement made in this declaration is punishable under 18 U.S.C. § 1001 by fine or imprisonment of not more than five (5) years, or both for filings of this Application in the United States of America.

Assignment

MILWAUKEE ELECTRIC TOOL CORPORATION
13135 West Lisbon Road
Brookfield, WI 53005

a Delaware Corporation

(hereinafter designated as the "Assignee"),

☐ I hereby acknowledge that I have assigned the above-identified invention by previous assignment (attached hereto) to Assignee which is hereby conformed for recordation in the US Patent Office and I confirm I have and do assign and transfer:

or

☒ For good and valuable consideration, the sufficiency of which is acknowledged, I hereby assign and transfer and/or have assigned and transferred to Assignee:

my entire right, title, and interest in, to, and under the Application, including all priority rights for other countries arising therefrom and the right to claim priority to the Application, all inventions or discoveries therein disclosed, and any and all Letters Patent of the United States, European Patent Office and of all other countries, which may be granted for such inventions or discoveries, or any of them, all such inventions or discoveries and all rights in such Application including any and all provisionals, substitutions, divisions, and continuations thereof, and to all Letters Patent that may be granted for said inventions and discoveries, and in and to all extensions, supplementary protection certificates, reexaminations, renewals, and reissues thereof, to be held and enjoyed by Assignee for its own use and enjoyment to the full end of the term or terms for which such Letters Patent may be granted, as fully and entirely as the same would

have been held and enjoyed by me had this assignment and sale not been made.

I shall execute all papers necessary in connection with the Application in the United States Patent and Trademark Office, European Patent Office, any other patent offices, and under the Patent Cooperation Treaty, and any continuing, divisional, or reissue applications thereof, any reexamination of any of such applications, and any patent term extensions or supplementary protection certificates of any such applications and also to execute separate assignments in connection with such applications as the Assignee may deem necessary or expedient.

I shall execute all papers necessary in connection with any litigation or any other judicial proceeding in the United States or other country, or any administrative proceeding in the United States Patent and Trademark Office, European Patent Office, any other patent office, or under the Patent Cooperation Treaty concerning the Application(s) or any continuation, divisional, or reissue applications thereof, or any reexamination of any such applications, or any Letters Patent issued therefrom or any patent term extensions or supplementary protection certificates of any such applications and to cooperate with the Assignee in every way possible in obtaining evidence and going forward with such litigation or proceeding.

I shall execute all papers and documents and perform any act which may be necessary in connection with claims or provisions of the International Convention for Protection of Industrial Property or similar agreements.

I shall do all other acts which, in the opinion of Assignee, may be necessary or desirable to secure the grant of Letters Patent to Assignee or its nominees, in the United States, by the European Patent Office and in all other countries where Assignee may desire to have such inventions or discoveries, or any of them, patented, with specifications and claims in such form as shall be approved by Assignee and to vest and confirm in Assignee or its nominees the full and complete legal and equitable title to all such Letters Patent.

I hereby (i) authorize and request the Commissioner of Patents to issue any and all Letters Patent of the United States resulting from the Application or any divisional, continuation, or reissue applications thereof, and any reexamination of any of such applications, to Assignee, and (ii) covenant that I have full right to convey the interest herein assigned, and that I have not executed, and will not execute, any agreement in conflict herewith.

I hereby grant the attorney of record the power to insert on this assignment any further identification which may be necessary or desirable in order to obtain legal recordation of this document.

LEGAL NAME OF INVENTOR

Steven W. Hyma

Signature

9/5/19

Date

80343942v.1

DECLARATION (37 CFR 1.63) FOR UTILITY OR DESIGN APPLICATION USING AN APPLICATION DATA SHEET (37 CFR 1.76)

Title of Invention: UTILITY ASSEMBLY AND COUPLING MECHANISM

As a below named inventor, I hereby declare that:

This declaration is directed to the application

☐ attached hereto, or

☒ United States application or PCT International Application No.15/826,232 filed on November 29, 2017

The above-identified application was made by me or authorized to be made by me.

I believe that I am the original inventor or an original joint inventor of a claimed invention in the application.

I have reviewed and understand the contents of the above-identified application, including the claims.

I acknowledge the duty to disclose information which is material to the patentability of this application as defined in 37 CFR § 1.56.

I hereby acknowledge that any willful false statement made in this declaration is punishable under 18 U.S.C. 1001 by fine or imprisonment of not more than five (5) years, or both.

Legal Name of Inventor

Inventor: **Yaron BRUNNER** Date: 4/01/18

Signature: _____