(19) Europäisches Patentamt
European Patent Office
Office européen des brevets

(11) EP 2 338 650 B1

(12) **EUROPEAN PATENT SPECIFICATION**

(45) Date of publication and mention of the grant of the patent:
19.10.2016 Bulletin 2016/42

(51) Int Cl.:
B25H 3/02 *(2006.01)* ***E05B 65/52*** *(2006.01)*

(21) Application number: **10195658.9**

(22) Date of filing: **17.12.2010**

(54) **Power tool storage case**

Elektrowerkzeug-Aufbewahrungskasten

Boîtier de stockage d'outil électrique

(84) Designated Contracting States:
AL AT BE BG CH CY CZ DE DK EE ES FI FR GB GR HR HU IE IS IT LI LT LU LV MC MK MT NL NO PL PT RO RS SE SI SK SM TR

(30) Priority: **25.12.2009 JP 2009294713**
25.08.2010 JP 2010188638

(43) Date of publication of application:
29.06.2011 Bulletin 2011/26

(73) Proprietor: **Makita Corporation**
Anjo-shi, Aichi 446-8502 (JP)

(72) Inventors:
- **Horiyama, Toru**
Anjo-shi Aichi 446-8502 (JP)
- **Kanou, Atsushi**
Anjo-shi Aichi 446-8502 (JP)
- **Okouchi, Yukiyasu**
Anjo-shi Aichi 446-8502 (JP)

(74) Representative: **Kramer Barske Schmidtchen**
Patentanwälte PartG mbB
European Patent Attorneys
Landsberger Strasse 300
80687 München (DE)

(56) References cited:
WO-A1-2008/099404 **DE-A1- 10 310 702**
US-A- 5 915 553 **US-A1- 2004 134 818**
US-B1- 6 527 309

Note: Within nine months of the publication of the mention of the grant of the European patent in the European Patent Bulletin, any person may give notice to the European Patent Office of opposition to that patent, in accordance with the Implementing Regulations. Notice of opposition shall not be deemed to have been filed until the opposition fee has been paid. (Art. 99(1) European Patent Convention).

Printed by Jouve, 75001 PARIS (FR)

Description

BACKGROUND OF THE INVENTION

1. Field of the invention

[0001] The present invention relates to a power tool storage case for storing an electric power tool such as an impact driver and its accessories.

2. Description of related art

[0002] US 5,915,553 A discloses storage organizers. US 2004/0134818 A1 discloses a modular toolbox system.

[0003] There is known a power tool storage case for storing an electric power tool such as an impact driver, in which the electric power tool and accessories such as replaceable bits, and in the case of a rechargeable electric power tool, a battery pack and a battery charger, are all collected together and stored in the case, so that they can be stored and carried together. As an example, Japanese Laid-open Patent Publication No. 2010-64227 discloses a power tool storage case including a storage case in the shape of an open rectangular box and configured to store an electric power tool body, a lid case having a shape similar to that of the storage case, fixing latches capable of locking the storage case and the lid case together, a sub-storage portion provided at an outer surface of the lid case and configured to store small pieces including bits, and a hingedly connected cover (outer lid) for opening or closing the sub-storage portion. The cover can be locked by a fixing latch.

[0004] However, as a fixing latch capable of locking the cover for opening or closing the sub-storage portion, the above conventional power tool storage case employs a so-called toggle latch comprising an engagement member and an urging member. For this reason, on one hand when a user locks the cover, two operations are required, including engaging the engagement member with a protrusion formed on the cover, and thereafter flipping down the urging member to urge the engagement member, and on the other hand when the use unlocks the cover, two operations are required, including flipping up the urging member to release the urging force applied to the engagement member, and thereafter disengaging the engagement member from the protrusion. Accordingly, an opening/closing operation for loading/unloading small pieces is complicated and the usability of the power tool storage case becomes deteriorated.

[0005] In view of the above disadvantages of the conventional power tool storage case, it is an object of the present invention to provide a power tool storage case, which can realize an excellent opening/closing operation for the outer lid and thus excels in usability.

SUMMARY OF THE INVENTION

[0006] In accordance with a first aspect, a power tool storage case for storing an electric power tool comprises: a main body casing having a storage portion configured to store an electric power tool; a lid member hingedly connected to the main body casing and capable of opening or closing the storage portion; a sub-storage portion provided at an outer surface of the lid member; and an outer lid hingedly connected to the lid member and capable of opening or closing the sub-storage portion. Further, a locking portion is provided on the outer lid so that when the sub-storage portion is closed by the outer lid, the locking portion is moved to an engagement position at which the locking portion is engaged with an engageable portion provided on the lid member, and the locking portion is movable from the engagement position to a disengagement position at which the locking portion is disengaged from the engageable portion.

[0007] Preferably in a second aspect, the power tool storage case according to the first aspect may further comprise an urging means for urging the locking portion toward the engagement position.

[0008] Preferably in a third aspect, the power tool storage case according to the first aspect or the second aspect may be characterized in that the locking portion comprises a locking plate separately provided on the outer lid.

[0009] Preferably in a fourth aspect, the power tool storage case according to any one of the first to third aspect may be characterized in that the locking portion is provided to be flush with or dented inward from an outer surface of the outer lid.

[0010] Preferably in a fifth aspect, the power tool storage case according to any one of the first to fourth aspect may be characterized in that each of the main body casing and the lid member is shaped like an open rectangular box, and the main body casing and the lid member are hingedly connected at their rear surfaces, which define a rear surface of the power tool storage case, whereas front surfaces of the main body casing and the lid member are locked or unlocked by a pair of latches, and in that the sub-storage portion and the outer lid having the locking portion are disposed at an upper surface of the lid member.

[0011] Preferably in a sixth aspect, the power tool storage case according to the fifth aspect may be characterized in that a handle is provided in a right-and-left direction at a front surface of the power tool storage case, and in that a partition projection which is parallel to the handle is provided between the locking portion and the handle on one of the lid member and the outer lid.

[0012] Still preferably, a pair of right and left projections may be provided at the front surface of the power tool storage case in such a manner as to protrude frontward from the latches held in a locked state, and both ends of the handle may be rotatably connected to the pair of right and left projections. Alternatively, the pair of right and left projections may be continuously formed at both end por-

tions of the partition projection.

[0013] Further preferably, the power tool storage case may be characterized in that the locking plate is supported in a window or a cutout formed in the outer lid and rotatable around an axis parallel to that of a hinge of the lid member. A plate-like stopper strip having a barb is provided at its lower end is provided on and protrudes downward from a lower surface of the locking plate and a stopper projection engageable with the barb of the stopper strip is provided on and protrudes upward from a bottom surface of the lid member. The barb and the stopper projection are engageable with each other when the outer lid is closed, and in that the urging means such as a coil spring is provided on the outer lid so that the locking plate is urged toward the engagement position at which the barb is engaged with the stopper projection.

[0014] With the configuration of the power tool storage case according to the first aspect, when the user closes the sub-storage portion by the outer lid, the outer lid can be automatically locked by the locking portion. Meanwhile, when the user opens the outer lid, the locking portion can be disengaged only by operation of the locking portion. herefore, the opening/closing the outer lid can be realized with an excellent operability and thus excels in usability.

[0015] With the configuration of the power tool storage case according to the second aspect, in addition to the advantageous effect of the first aspect, the automatic engagement of the locking portion can be reliably performed because of the urging means.

[0016] With the configuration of the power tool storage case according to the third aspect, in addition to the advantageous effect of the first or the second aspect, the locking portion can be embodied in a preferable configuration.

[0017] With the configuration of the power tool storage case according to the fourth aspect, in addition to the advantageous effect of any one of the first to third aspect, it is possible to decrease an occurrence of incidental disengagement of the outer lid when the locking portion is trapped by an external object.

[0018] With the configuration of the power tool storage case according to the fifth aspect, in addition to the advantageous effect of any one of the first to fourth aspect, from the operations of moving the locking portion to the operation of opening the outer lid can be performed in a continuous and smooth manner.

[0019] With the configuration of the power tool storage case according to the sixth aspect, in addition to the advantageous effect of the fifth aspect, the handle and the locking portion are partitioned so that an erroneous operation of the locking portion upon holding the handle can be decreased.

[0020] Other and further objects, features and advantages of the present invention will appear more fully from the following description.

BRIEF DESCRIPTION OF THE DRAWINGS

[0021] To better understand the claimed invention, and to show how the same may be carried into effect, reference will now be made, by way of example only, to the accompanying drawing.

FIG. 1 is a perspective view of a power tool storage case according to a first embodiment.

FIG. 2 is a vertical central sectional view of the power tool storage case according to the first embodiment.

FIG. 3 is an enlarged sectional view showing a mechanism around a locking plate of the power tool storage case according to the first embodiment.

FIG. 4 is a vertical central sectional view showing a state in which the locking plate of the power tool storage case is flipped up.

FIG. 5 is a vertical central sectional view showing a state in which an outer lid of the power tool storage case is opened.

FIG. 6 is a perspective view showing a state in which the outer lid of the power tool storage case is opened.

FIG. 7 is a vertical central sectional view showing a state in which the outer lid of the power tool storage case is almost closed.

FIG. 8 is a perspective view of a power tool storage case according to a second embodiment (not showing all features of the claims).

FIG. 9 is an enlarged sectional view showing a mechanism around the locking plate of the power tool storage case according to the second embodiment.

FIG. 10 is an enlarged sectional view showing the mechanism around the locking plate of the power tool storage case in an unlocked state.

FIG. 11 is an enlarged sectional view showing the mechanism around the locking plate of the power tool storage case.

FIG. 12 is a whole perspective view of a power tool storage case according to a third embodiment, in which the case is horizontally placed while a handle is tilted up into a use position and main locks and an auxiliary lock are locked.

FIG. 13 is a whole perspective view of the power tool storage case according to the third embodiment (not showing all features of the claims), in which the case is horizontally placed while the handle is retreated to a storage position and the main locks and the auxiliary lock are unlocked.

FIG. 14 is a sectional view taken in the direction of the arrow along the line III-III of FIG. 13, illustrating a vertical section of the auxiliary lock in an unlocked state while the case is horizontally placed.

FIG. 15 is a sectional view taken in the direction of the arrow along the line IV-IV of FIG. 12, illustrating a vertical section of the auxiliary lock in a locked sate while the case is horizontally placed.

FIG. 16 is a whole perspective view of the power tool storage case according to the third embodiment, il-

Klein Tools Ex. 1014, Page 3 of 35

lustrating a midway position before an auxiliary lid portion is closed, in which an operating lever of the auxiliary lock is returned to a locked position, with the result that a front end portion of an engagement lever comes into abutment on an upper part of a locking nail portion. In this figure, the handle is retreated to the storage position and the right and left main locks are locked.

FIG. 17 is a whole perspective view of the power tool storage case according to the third embodiment, illustrating a state in which the main lid portion is opened while the auxiliary lock remains unlocked, with the result that the engagement lever of the auxiliary lock is caught by the locking nail portion and the auxiliary lid portion is held in an almost closed state. It should be noted that the interior of the case body is schematically shown and partitioning walls for securely holding pieces to be stored are omitted in this figure. Also in this figure, the power tool storage case is shown as being horizontally placed.

FIG. 18 is a sectional view taken in the direction of the arrow along the line VII-VII of FIG. 12, illustrating a vertical section of the main lock in the locked sate while the case is horizontally placed.

DETAILED DESCRIPTION OF THE INVENTION

[0022] With reference to the accompanying drawings, embodiments of the present invention will be described in detail.

FIRST EMBODIMENT

[0023] With reference to FIGS. 1 and 2, a first embodiment of a power tool storage case (hereinafter simply referred to as a storage case) is shown. The storage case 1 is made of synthetic resin and includes a main body casing 2 shaped like an open rectangular box having a deep bottom, and a lid member 3 shaped like a similar open rectangular box having a shallow bottom. In the main body casing 2, a storage portion 4 is formed, in which an electric power tool body such as a rechargeable impact driver (not shown), a battery pack (not shown), a battery charger (not shown), and the like are stored. The main body casing 2 and the lid member 3 are hingedly connected to each other such that an opening at an upper side of the main body casing 2 and an opening at a lower side of the lid member 3 are facing to each other and rear surfaces (left side of FIG. 2 corresponds to the front side) of the main body casing 2 and the lid member 3 are connected, at rear-side edges adjacent to the openings, by a shaft 5 to allow a relative rotation between the lid member 3 and the main body casing 2.

[0024] Front surfaces of the main body casing 2 and the lid member 3 can be locked or unlocked by a pair of right and left latches 6, 6 at front-side edges adjacent to the openings. The latch 6 is a so-called toggle latch or flip-over latch, in which an upper end of a lever plate 7 is rotatably connected at an edge of the opening of the main body casing 2, and a hook plate 8 is rotatably connected at its lower end to an intermediate portion of the lever plate 7. Accordingly, while the upper end of the hook plate 8 is engaged with a projection (not shown) provided at an edge of the opening of the lid member 3, the lever plate 7 is flipped down so as to be parallel with the front face of the main body casing 2, so that the lid member 3 is locked with the main body casing 2 being closed.

[0025] The reference number 9 indicates a handle provided on the main body casing 2 between the latches 6, 6. Both ends of the handle 9 are rotatably connected to a pair of right and left lower projections 10, 10 which protrude frontward from the latches 6, 6 held in a locked state. In a state where the handle 9 is tilted down toward the front surface of the main body casing 2, the handle 9 does not protrude forward from the front surfaces of the lower projections 10, 10. A pair of ribs 11, 11 extending in the vertical direction are formed outward of the both ends of the handle 9 that is tilted down, continuously from the pair of lower projections 10, 10.

[0026] Further, a pair of right and left upper projections 12, 12 are provided on the front surface of the lid member 3 in such positions that they form continuous profiles with the lower projections 10, 10 of the main body casing 2 when the lid member 3 is closed.

[0027] The upper surface of the lid member 3 is recessed and divided into a plurality of spaces, which form a sub-storage portion 13 for storing small pieces including bits. Further, on the lid member 3, there is provided an outer lid 14 for opening or closing the upper surface of the sub-storage portion 13. This outer lid 14 is a rectangular plate for covering the whole sub-storage portion 13, and includes a rear edge portion (not shown) which is formed by a bending down part of the rectangular plate. The rear edge portion is engaged in an engagement groove 13a extending in the right-and-left direction along the rear edge of the sub-storage portion 13, so that the outer lid 14 becomes rotatable around the rear edge portion. A cover portion 15 as a partitioning protrusion is provided in the right-and-left direction at a front center part of the outer lid 14 in such a manner as to protrude arcuately frontward and downward. The cover portion 15 has both end portions which form continuous profiles with the upper projections 12, 12 of the lid member 3 in a state where the lid member 3 and the outer lid 14 are closed.

[0028] Further, a square-shaped window 16 is formed in a front center part of the outer lid 14, and a locking plate 17 as a locking portion is positioned in the window 16. As also shown in FIG. 3, the locking plate 17 is a rectangular-shaped plate fitted into the window 16 so that the upper surface of the locking plate 17 becomes flush with the upper surface of the outer lid 14. A finger rest hole 18 is formed in a rear portion of the locking plate 17, and a plate-like stopper strip 19 having a forward-facing barb 20 at its lower end is provided on and protrudes downward from a lower surface of the locking plate 17 in

Klein Tools Ex. 1014, Page 4 of 35

a position forward of the finger rest hole 18. The barb 20 has a slanted surface extending from the lower end. The slanted surface of the barb 20 slants upward as it goes forward.

[0029] Further, a pair of side walls 21, 21 extend downward from the lower surface of the locking plate 17 in positions forward of and outward of the stopper strip 19 in the right-and-left direction, and at the outer surfaces of the right and left side walls 21, 21, a pair of shafts 22, 22 extends outward. Meanwhile, a pair of receiving portions 23, 23 are provided on and extend downward from the lower surface of the outer lid 14 at right and left edges of the window 16. Each of the receiving portion 23 has a receiving hole 24, into which one end of the shaft 22 is fitted. Accordingly, the locking plate 17 is supported in the window 16 and becomes rotatable around the shafts 22, 22.

[0030] The front end of the locking plate 17 forms a thin plate portion 25, which is engageable with the front edge of the window 16 from below. As best seen in FIG. 3, when the locking plate 17 rotates in the clockwise direction of the figure, the upper surface of the locking plate 17 does not move further beyond an engagement position at which the upper surface of the locking plate 17 becomes flush with the upper surface of the outer lid 14. An L-shaped spring seat plate 26 is provided on the lower surface of the outer lid 14 at a front end portion of the locking plate 17. A coil spring 27 as an urging means is vertically positioned between the spring seat plate 26 and the front end portion of the locking plate 17. Therefore, the locking plate 17 is urged toward the engagement position at which the thin plate portion 25 abuts on the front end of the window 16. The reference number 27a indicates a guide rod extending downward from the lower surface of the locking plate 17 just behind the coil spring 27. The guide rod 27a is provided for preventing buckling of the coil spring 27.

[0031] An engagement plate 28 is provided on the bottom surface of the sub-storage portion 13 of the lid member 3, and a stopper projection 29 as an engageable portion is formed at an upper end portion of the engagement plate 28. The stopper projection 29 faces backward and protrudes toward the barb 20. The engagement plate 28 lies in a position parallel to and frontward of the stopper strip 19 of the locking plate 17 when the outer lid 14 is closed. The barb 20 of the stopper strip 19 is engageable with the stopper projection 29 from below. The stopper projection 29 has a slanted surface extending from the upper end. The slanted surface of the stopper projection 29 slants downward as it goes backward.

[0032] According to the storage case 1 as described in this first embodiment, when the outer lid 14 is opened for loading or unloading small pieces to or from the sub-storage portion 13, a user inserts his finger into the finger rest hole 18 of the locking plate 17 and flips up the locking plate. By this operation, the locking plate 17 rotates around the shaft 22, 22 in the anticlockwise direction of FIG. 3 against the urging force of the coil spring 27. As a result, the barb 20 of the stopper strip 19 is rotated and disengaged from the stopper projection 29 into a disengagement position shown in FIG. 4. Therefore, as best seen in FIGS. 5 and 6, the outer lid 14 is rotated in an upward direction around the rear edge portion to open the sub-storage portion 13.

[0033] Meanwhile, when the user rotates the outer lid 14 to close the sub-storage portion 13, as best seen in FIG. 7, the barb 20 of the stopper strip 19 of the locking plate 17 comes into contact with the stopper projection 29. Thereafter, as the outer lid 14 is rotated, the barb 20 slips on and passes the stopper projection 29 because of the urging force of the coil spring 27 and the guidance of the slanted surfaces. When the outer lid 14 reaches the closing position, the locking plate 17 returns to the engagement position as shown in FIGS. 2 and 3, at which the barb 20 is engaged with the stopper projection 29. Therefore, the outer lid 14 is automatically locked when the sub-storage portion 13 is closed by the outer lid 14.

[0034] According to the storage case 1 in the first embodiment, the locking plate 17 is provided on the outer lid 14 so that when the sub-storage portion 13 is closed by the outer lid 14, the locking plate 17 is moved to the engagement position at which the locking plate 17 is engaged with the stopper projection 29 provided on the lid member 3. Further, the locking plate 17 is movable from the engagement position to the disengagement position at which the locking plate 17 is disengaged from the stopper projection 29. When the user closes the sub-storage portion 13 by the outer lid 14, the outer lid 14 can be automatically locked by the locking plate 17. When the user opens the outer lid 14, the locking plate 17 can be disengaged only by the locking plate 17 being flipped up. Therefore, the opening/closing the outer lid can be realized with an excellent operability and thus excels in usability.

[0035] Especially in this first embodiment, since the coil spring 27 is provided as an urging means for urging the locking plate 17 toward the engagement position at which the locking plate 17 engages with the stopper projection 29, the automatic engagement of the locking plate 17 can be reliably performed.

[0036] Further, since the locking portion comprises the locking plate 17 separately provided on the outer lid 14, the locking portion can be embodied in a preferable configuration.

[0037] Further, since the locking plate 17 is provided to be flush with the outer surface of the outer lid 14, it is possible to decrease an occurrence of incidental disengagement of the outer lid 14 when the locking plate 17 is trapped by an external object.

[0038] In addition, each of the main body casing 2 and the lid member 3 is shaped like an open rectangular box, and the main body casing 2 and the lid member 3 are hingedly connected at their rear surfaces, which define a rear surface of the storage case 1. On the other hand, front surfaces of the main body casing 2 and the lid member 3 are locked or unlocked by a pair of latches 6, 6,

Klein Tools Ex. 1014, Page 5 of 35

and further the sub-storage portion 13 and the outer lid 14 with the locking plate 17 are provided at the upper surface of the lid member 3. Therefore, the flipping up operation of the locking plate 17 and the releasing operation of the outer lid 14 become substantially in the same movement direction, so that from the operations of flipping up of the locking plate 17 to the operation of opening the outer lid 14 can be performed in a continuous and smooth manner.

[0039] Further, the handle 9 is provided in the right-and-left direction at the front surface of the storage case 1, and the cover portion 15 which is parallel to the handle 9 is provided on the outer lid 14 between the locking plate 17 and the handle 9. Therefore, the handle 9 and the locking plate 17 are partitioned, which prevents an erroneous operation of the locking plate 17 upon holding the handle 9.

SECOND EMBODIMENT (not showing all features of the claims)

[0040] A storage case according to a second embodiment will be described below. The storage case in this embodiment is substantially the same as that described in the first embodiment except for the configuration around the locking plate. Parts similar to those previously described in the first embodiment are denoted by the same reference numerals, and detailed description thereof will be omitted. Description will be mainly given of the structure of the locking plate.

[0041] As seen in FIG. 8, the storage case 1a has a cutout 30 at a front center part of the outer lid 14. The cutout 30 extends beyond the front edge of the outer lid 14 and across the center part of the cover portion 15. The cutout 30 becomes broader as it goes forward, and a locking plate 31 is provided in the cutout 30. The locking plate 31 is a plate-like member having an arcuately curved front end portion which extends downward in conformity with the curvature of the cover potion 15. As best seen in FIG. 9, a pair of right and left side walls 32, 32 are provided on a lower surface of the locking plate 31, at a center part of the locking plate 31 as viewed in the front-and-rear direction. A pair of shafts 33, 33 extend outward at the outer surfaces of the right and left side walls 32, 32. Meanwhile, a pair of receiving portions 34, 34 each having a receiving hole 35 are provided on and extend downward from the lower surface of the outer lid 14 at right and left edges of the cutout 30. The shafts 33, 33 of the locking plate 31 are fitted into the corresponding receiving holes 35, 35 of the receiving portions 34, 34, so that the locking plate 31 becomes rotatable with respect to the outer lid 14. In this second embodiment, a thin plate portion 36 is formed at a rear end of the locking plate 31, and the thin plate portion 36 is engageable with a rear edge of the cutout 30. Therefore, a further rotation of the locking plate 31 in the anticlockwise direction can be prevented, and the locking plate 31 does not move further beyond the engagement position between the thin plate portion 36 and the rear edge of the cutout 30.

[0042] Further, in this embodiment, a stopper strip 37 is positioned slightly forward of the shafts 33, 33 and a barb 38 protrudes backward from the stopper strip 37. An engagement plate 39 is positioned rearward of the stopper strip 37 and a stopper projection 40 protrudes forward from the engagement plate 39. Similar to the first embodiment, the barb 38 has a slanted surface extending from its lower end, and the stopper projection 40 has a slanted surface extending from its upper end.

[0043] As with the first embodiment, a coil spring 41 is vertically positioned at the rear of the cutout 30 between a spring seat plate 42 extending from the outer lid 14 and the rear end portion of the locking plate 31. The coil spring 41 urges the locking plate 31 to rotate in the anticlockwise direction. The reference number 43 indicates a guide rod, and the reference number 44 indicates a circular recessed portion formed on the upper surface of the locking plate 31 at a position rearward of the shafts 33, 33.

[0044] According to the storage case 1a as described in this second embodiment, when the outer lid 14 is opened for loading or unloading small pieces to or from the sub-storage portion 13, the user places his finger on the circular recessed portion 44 of the locking plate 31 and then depresses the locking plate 31 downward. By this operation, the locking plate 31 rotates around the shafts 33, 33 in the clockwise direction of FIG. 9 against the urging force of the coil spring 41, so that the barb 38 of the stopper strip 37 is caused to be rotated and disengaged from the stopper projection 40 into a disengagement position shown in FIG. 10. Therefore, the outer lid 14 can be rotated in an upward direction around the rear edge portion to open the sub-storage portion 13.

[0045] Meanwhile, when the user rotates the outer lid 14 to close the sub-storage portion 13, as best seen in FIG. 11, the barb 38 of the stopper strip 37 of the locking plate 31 comes into abutment against the stopper projection 40. Thereafter, as the outer lid 14 is rotated, the barb 38 slips on and passes the stopper projection 40 because of the urging force of the coil spring 41 and the guidance of the slanted surfaces. When the outer lid 14 reaches the closing position, the locking plate 31 again returns to the engagement position as shown in FIGS. 8 and 9, at which the barb 38 is engaged with the stopper projection 40. Therefore, the outer lid 14 is automatically locked when the sub-storage portion 13 is closed by the outer lid 14.

[0046] According to the storage case 1a in the second embodiment, the locking plate 31 is provided on the outer lid 14 so that when the sub-storage portion 13 is closed by the outer lid 14, the locking plate 31 is moved to the engagement position at which the locking plate 31 is engaged with the stopper projection 40 provided on the lid member 3, and the locking plate 31 is movable from the engagement position to the disengagement position at which the locking plate 31 is disengaged from the stopper projection 40. When the user closes the sub-storage portion 13 by the outer lid 14, the outer lid 14 can be auto-

Klein Tools Ex. 1014, Page 6 of 35

matically locked by the locking plate 31. When the user opens the outer lid 14, the locking plate 31 can be disengaged only by flipping up the locking plate 31. Therefore, the opening/closing the outer lid 14 can be realized with an excellent operability and thus excels in usability.

[0047] Especially in this second embodiment, since the coil spring 41 is provided as an urging means for urging the locking plate 31 toward the engagement position at which the locking plate 31 engages with the stopper projection 40, the automatic engagement of the locking plate 31 can be reliably performed.

[0048] Further, since the locking portion comprises the locking plate 31 separately provided on the outer lid 14, the locking portion can be embodied in a preferable configuration.

[0049] Further, since the locking plate 31 is provided to be flush with the outer surface of the outer lid 14, it is possible to decrease an occurrence of incidental disengagement of the outer lid 14 when the locking plate 31 is trapped by an external object.

[0050] It is to be noted that in the above first and second embodiments, the urging means is not limited to a coil spring, and other elements such as a leaf spring and a resin spring may be used, where appropriate. Other modifications may also be possible. For example, a mechanism for rotatably supporting the locking plate may be modified by reversely providing the shafts and the corresponding receiving holes. The slanted surfaces of the barb and the stopper projection may not be necessary, and only one slanted surface may be provided on one of the barb and the stopper projection. As an alternative, a curved surface (curved surfaces) may be provided in place of the slanted surface (slanted surfaces).

[0051] In the above first and second embodiments, the locking plate is provided to be flush with the outer surface of the outer lid. However, the locking plate may be dented inward from the outer surface of the outer lid.

[0052] Further, in the above first and second embodiments, the locking plate is separately provided as a locking portion. However, an elastic strip integral with the outer lid may be used as a locking portion.

[0053] In addition, according to the first and second embodiments, the urging means urges the locking plate toward the engagement position so that the automatic engagement of the locking plate is achieved. However, the locking plate may not have an urging means. For example, the outer lid may be provided with a locking plate capable of swinging between the engagement position and the disengagement position, whereas the lid member may be provided with a pressing member; the pressing member protrudes from the lid member and is urged so that when the outer lid is in a closed state, the pressing member contacts with the locking plate and urges the same toward the engagement position. By this arrangement, as soon as the user closes the outer lid, the locking plate brought into abutment with the pressing member is moved to the engagement position and locks the outer lid. On the other hand, when the user operates the locking plate so as to depress the pressing member and causes the locking plate to move into the disengagement position, the outer lid can be opened.

[0054] Other than the above, the locking portion according to the present invention may be applicable to other configurations. For example, the outer lid may be shaped as a square or a trapezoid. The number of the sub-storage portion and the lid member may not be limited to one each, and for example, the sub-storage portion formed on the upper surface of the lid member may be opened or closed using a plurality of lid members. The sub-storage portion and the lid member may be provided at an outer surface of the main body casing.

[0055] Of course, the configurations of the main body casing and the lid member may be modified, and further, the shape, the number, and the arrangement of the latches and/or the handle may be modified, where appropriate.

THIRD EMBODIMENT (not showing all features of the claims)

[0056] With reference to FIGS. 12 to 18, a third embodiment will be described.

[0057] A storage case 100 in this third embodiment is a so-called plastic case. The storage case 100 provides a double storage space, in which an electric power tool body such as a rechargeable impact driver, and its accessories such as a battery pack, and a battery charger for the battery pack, and small pieces such as machine screws are all collectively stored in the storage case 100 and carried together. The storage case 100 includes a case body 110 made of plastic, and a main lid portion 120 made of plastic and configured to open or close the case body 110.

[0058] The case body 110 is shaped like a rectangular box having an upper opening, and includes a front surface portion 111, right and left side portions 112, 113, a rear surface portion 114, and a bottom plate portion 115. The case body 110 has a sufficient volume for storing relatively large objects such as an electric power tool body and a battery pack. The interior of the case body 110 is divided by partitioning walls or the like so that stored objects can be retained without causing a rattle noise.

[0059] The main lid portion 120 includes a front surface portion 121, right and left side portions 122, 123, a rear surface portion 124, and a top plate portion 125. As seen in FIGS. 14, 15 and 18, the rear surface portion 114 of the case body 110 and the rear surface portion 124 of the main lid portion 120 are hingedly connected together through a hinge portion 102. The main lid portion 120 is rotated such that the front surface portion 121 thereof moves in an upward or a downward direction, so that the case body 110 is opened or closed by the main lid portion 120. FIG. 17 shows a state in which the main lid portion 120 is opened.

[0060] As seen in FIGS. 14, 15 and 18, when the stor-

age case 100 is placed on a working table D with the bottom plate portion 115 of the case body 110 being in contact with the working table D, the main lid portion 120 faces upward and the case body 110 is positioned under the main lid portion 120. This placement posture of the storage case 100 is referred to as a horizontal posture in this specification. On the other hand, when the storage case 100 is placed on the working table D with the rear surface portion 114 of the case body 100 and the rear surface portion 124 of the main lid portion 120 being in contact with the working table D, the storage case 100 is held in a stand-up posture. This placement posture of the storage case 100 is referred to as a vertical posture in this specification. As seen in FIG. 17, an opening/closing operation of the main lid portion 120 is carried out in the horizontal posture. Meanwhile, the storage case 100 is portably carried in the vertical posture.

[0061] For the purpose of portably carrying the storage case 1a, a handle 116 is provided on the front surface portion 111 of the case body 110 in a central position along the right-and-left direction. The handle 116 has a substantially U-shaped configuration, and through both right and left side portions the handle 116 is rotatably supported on the case body 110. The handle 116 is vertically rotatable within 90 degrees. As best seen in FIGS. 12 and 15, the handle 116 can be tilted up (in a direction shown by a thick open arrow (A)) into a use position at which the handle 116 protrudes from the front surface portion 111 substantially in the horizontal direction. On the contrary, as best seen in FIGS. 13 and 14, the handle 116 can be tilted down into a storage position at which the handle 116 is positioned along the front surface portion 111. The handle 116 can be tilted down by the rotary movement of the user into the storage position, and tilted up into the use position from the storage position. When the storage case 100 is placed in the horizontal posture, the handle moves into the storage position because of its own weight. The user can hold the handle 116 retreated in the storage position and then tilt it up in the direction shown by the thick open arrow (A), so that the handle 116 is rotated into the use position.

[0062] A pair of main locks 130, 130 are provided at both sides of the front surface portion 111 of the case body 110. Each of the main locks 130, 130 is a so-called toggle latch, which includes an operating lever 131 and an engagement lever 132. The operating lever 131 is rotatably supported on the front surface portion 111 of the case body 110. The operating lever 131 is rotatable in the vertical direction. The engagement lever 132 is rotatably supported on the operating lever 131 in such a manner that the axis of rotation of the engagement lever 132 is shifted from that of the operating lever 131. The engagement lever 132 is rotatable in the vertical direction with respect to the operating lever 132. As best seen in FIG. 18, the operating lever 131 is supported on the front surface portion 111 of the case body 110 through a supporting shaft portion 131a, so as to allow a vertical rotary movement of the operating lever 131. The engagement lever 132 is rotatably supported on the operating lever 131 through a supporting shaft portion 132a. The supporting shaft portion 132a of the engagement lever 132 is shifted from the supporting shaft portion 131a of the operating lever 131 toward a rotary distal end of the operating lever 131.

[0063] Each of the right and left main locks 130, 130 is locked when a distal end portion of the engagement lever 132 is hooked against a locking nail portion 121a provided on the front surface portion 121 of the main lid portion 120 and thereafter the operating lever 131 is rotated in the downward direction. When the main locks 130, 130 are locked, the main lid portion 120 is locked with respect to the case body 110. FIGS. 12 and 18 show a state in which both of the right and left main locks 130, 130 are locked. Each of the main locks 130, 130 can be unlocked when the operating lever 131 is rotated in the upward direction and thereafter the engagement of the engagement lever 132 with respect to the locking nail portion 121a is disengaged. FIGS. 13 and 16 show a state in which both of the right and left main locks 130, 130 are unlocked. By unlocking both of the right and left main locks 130, 130, the main lid portion 120 can be opened in the upward direction as shown in FIG. 17. It should be noted that the handle 116 and the right and left main locks 130, 130 as described above have substantially the same configurations as those of the conventional art and no particular modifications may be required in this embodiment.

[0064] The storage case 100 according to the third embodiment provides a double storage space, and in addition to the storage space in the case body 110, an auxiliary storage space 140 for storing small pieces such as machine screws is provided in the top plate portion 125 of the main lid portion 120. An auxiliary lid portion 141 made of plastic is provided to open or close the auxiliary storage space 140. The auxiliary lid portion 141 has a rectangular plate shape, and a hinge portion 141a is provided on the rear surface of the auxiliary lid portion 141 at the rear end edge thereof. The auxiliary lid portion 141 is rotatably supported on the top plate portion 125 of the main lid portion 120 through the hinge portion 141a so that the auxiliary lid portion 141 can be moved in the vertical direction to open or close the auxiliary storage space 140. The auxiliary lid portion 141 corresponds to a small lid according to the conventional art.

[0065] An auxiliary lock 150 for locking the auxiliary lid portion 141 in a locked state is provided, in place of a distal engagement portion of the conventional art, on the front surface portion 121 of the auxiliary lid portion 141 in a central position along the right-and-left direction. As with the main locks 130, 130, a so-called toggle latch is also used in the auxiliary lock 150, which includes an operating lever 151 and an engagement lever 152. The operating lever 151 is rotatably supported on the front surface portion 121 of the auxiliary lid portion 141 through a supporting shaft portion 151a. The operating lever 151 is positioned at a center portion along the right-and-left

direction and is rotatable in the vertical direction. The operating lever 151 is movable between an unlocked position such as shown in FIGS. 13 and 14 in which the operating lever 151 protrudes from the front surface portion 121 substantially in the horizontal direction and a locked position such as shown in FIGS. 12, 15 and 16 in which the operating lever 151 has been rotated upward from the unlocked position and is positioned substantially along the front surface portion 121. The engagement lever 152 is rotatably supported on the operating lever 151 through a supporting shaft portion 152a. The supporting shaft portion 152a of the engagement lever 152 is shifted from the supporting shaft portion 151a of the operating lever 151 toward a rotary distal end of the operating lever 151. Therefore, when the operating lever 151 is rotatively operated, the engagement lever 152 and the supporting shaft portion 152a thereof move a large distance along the vertical direction.

[0066] Provided at a rotary distal end portion of the engagement lever 152 is an engagement nail portion 152b. A locking nail portion 153 is provided on the front surface portion 121 of the main lid portion 120 corresponding to the engagement nail portion 152b. The locking nail portion 153 is positioned at a center portion along the right-and-left direction of the front surface portion 121. As best seen in FIGS. 12 and 15, when the operating lever 151 is rotated upward into the locked position while the engagement nail portion 152b is engaged with the locking nail portion 153 from below, the engagement lever 152 is hooked against the locking nail portion 153 and the auxiliary storage space 140 is locked by the auxiliary lid portion 141. On the contrary, as best seen in FIGS. 13 and 14, when the operating lever 151 is rotated downward into the unlocked position (e.g., in the direction shown by the thick open allow (B) of FIGS. 12 and 15), the engagement lever 152 also moves downward to disengage the engagement nail portion 152b from the locking nail portion 153. Thereby, the auxiliary lock 150 can be unlocked.

[0067] As best seen in FIG. 14, when the operating lever 151 is rotated into the unlocked position, the supporting shaft portion 152a moves toward the front surface side, with the result that the engagement lever 152 as a whole moves toward the front surface side. Further, since the engagement lever 152 is vertically hanged down from the operating lever 151 by its own weight, the engagement nail portion 152b retreats from the locking nail portion 153 in a direction toward the front surface side. Accordingly, if the auxiliary lid portion 141 is rotated upward, while being kept in this unlocked state, for opening the auxiliary lid portion 141, the engagement nail portion 152b of the engagement lever 152 passes through the locking nail portion 153 at the front surface side and interference between the engagement nail portion 152b and the locking nail portion 153 does not occur.

[0068] Accordingly, when the auxiliary storage space 140 is opened, the user only rotates the operating lever 151 downward (in the direction shown by the thick open allow (B)) into the unlocked position. By this operation, the engagement lever 152 reliably retreats from the locking nail portion 153 by a sufficient distance. Therefore, if the auxiliary lid portion 141 is rotated upward from this position to open the auxiliary storage space 140, the engagement lever 152 passes upward through the locking nail portion 153 at the front surface side without interference between the engagement lever 152 and the locking nail portion 153. As a result, when the user opens the auxiliary lid portion 141, the user is not required to hold the engagement lever 152 and keep the engagement nail portion 152b of the engagement lever 152 away from the locking nail portion 153 so as to prevent interference therebetween, so that the user can only rotate the auxiliary lid portion 141 in the upward direction. This makes it possible for the user to operate the auxiliary lid portion 141 by one hand in a simple and prompt manner.

[0069] When the user rotates the operating lever 151 upward from the disengaged state shown in FIG. 14 into the locked position, the engagement lever 152 moves obliquely upward toward the rear surface side (i.e., in a direction diagonally upward in FIG. 14 from the lower left to the upper right) while being vertically hanged down from the operating lever 151 through the supporting shaft portion 152a, and thereafter, as seen in FIG. 15, the engagement nail portion 152b of the engagement lever 152 is brought into engagement with the locking nail portion 153 from below to thereby lock the auxiliary lock 150.

[0070] Next, the user rotates the operating lever 151 of the auxiliary lock 150 downward into the unlocked position. When the user opens the main lid portion 120 in the upward direction while the auxiliary lock 150 remains unlocked, the engagement lever 152 of the auxiliary lock 150 rotates by its own weight relative to the operating lever 151. As a result, the engagement nail portion 152b of the engagement lever 152 moves toward the underside of the locking nail portion 153. Accordingly, if the user rotates the main lid portion 120 upward while the auxiliary lock 150 remains unlocked, it is possible to prevent the auxiliary lid portion 141 from being unintentionally opened because the engagement lever 152 of the auxiliary lock 150 is caught by the locking nail portion 153.

[0071] Similarly, even if the storage case 100 is moved from the horizontal posture to the vertical posture while the main lid portion 120 is locked in the locked state with respect to the case body 110 and the operating lever 151 of the auxiliary lock 150 is rotated downward into the unlocked position to unlock the auxiliary lock 150, the engagement lever 152 of the auxiliary lock 150 rotates by its own weight relative to the operating lever 151 and moves toward the underside of the locking nail portion 153. Therefore, it is possible to prevent the auxiliary lid portion 141 from being unintentionally opened.

[0072] As described above, the auxiliary lid portion 141 can be opened only by the user's desired releasing operation. Therefore, even if the user opens the main lid portion 120 with the auxiliary lock 150 being unlocked or even if the user lifts the storage case 100 from the hori-

zontal posture to the vertical posture, an unintentional release of the auxiliary lid portion 141 can be prevented, thereby avoiding scattering of small pieces stored in the auxiliary storage space 140.

[0073] Further, as seen in FIGS. 14 and 16, a guiding surface 153a is provided on the locking nail portion 153 of the auxiliary lock 150. The guiding surface 153a is formed at a front upper corner portion of the locking nail portion 153, and slants downward toward the front surface side. According to this guiding surface 153a, the auxiliary lid portion 141 can be closed in a reliable manner.

[0074] For example, as best seen in FIG. 16, in the case where the user closes the auxiliary lid portion 141 while the storage case 100 is placed in the horizontal posture with the main lid portion 120 being closed with respect to the case body 110, even if the distal end portion (engagement nail portion 152b) of the engagement lever 152 that is moved in the downward direction contacts (abuts on) the locking nail portion 153 from above, the guiding surface 153a guides the distal end portion of the engagement lever 152 in a direction away from the locking nail portion 153. Therefore, as seen in FIG. 14, the distal end portion of the engagement lever 152 is reliably restored toward the underside of the locking nail portion 153.

[0075] Especially, as seen in FIG. 16, if the operating lever 151 of the auxiliary lock 150 is unintentionally returned to the locked position while the auxiliary lid portion 141 is open, the engagement lever 152 closely approaches the front surface portion 121. In this position, if the user closes the auxiliary lid portion 141, the engagement lever 152 is likely to abut on the locking nail portion 153. However, according to this embodiment, since the guiding surface 153a is provided on the upper part of the locking nail portion 153, the distal end portion of the locking lever 152 is guided in a direction away from the locking nail portion 153 to avoid interference of the locking lever 152 with the locking nail portion 153. Therefore, the auxiliary lid portion 141 can be reliably closed. If the engagement lever 152 interferes with the upper part of the locking nail portion 153 and is kept in an abutment state, a further closing operation of the auxiliary lid portion 141 is blocked. For this reason, the user has to move the engagement lever 152 away from the locking nail portion 153. This tedious and time-consuming operation deteriorates the usability of the storage case 100. However, according to the auxiliary lock 150 in this third embodiment, the auxiliary lid portion 141 can be closed in a reliable manner without requiring the above tedious and time-consuming operation, which results in enhancement of the usability of the storage case 100.

[0076] According to the storage case 100 as described previously in this third embodiment, the main lid portion 120 can be closed relative to the case body 110 by the right and left main locks 130, 130. The main locks 130, 130 are provided on the case body 110. The engagement of the engagement lever 132 with respect to the locking nail portion 121a can be disengaged by upwardly rotating the operating lever 131 into a stand-up position, so that the main lid portion 120 can be opened in the upward direction. Meanwhile, the auxiliary lock 150 is provided on the auxiliary lid portion 141. When the user rotates the operating lever 151 in the downward direction, the engagement of the engagement lever 152 with respect to the locking nail portion 153 can be disengaged, so that the auxiliary lid portion 141 can be opened in the upward direction.

[0077] When the storage case 100 is placed in the horizontal posture such as shown in FIG. 13, the handle 116 provided on the case body 110 is retreated to the storage position because of its own weight. In the case where the user carries the storage case 100 placed in the horizontal posture, the user first moves the handle 116 from the storage position of FIG. 13 into the use position of FIG. 12 by tilting up the handle 116 in the direction shown by the thick open arrow (A) (i.e., upward direction). During this operation, the user's hand holding the handle 116 also moves the handle 116 in the direction shown by the thick open arrow (A) (i.e., upward direction) so as to rotate the handle 116 from a lower position, that is, the storage position to an upper position, that is, the use position. According to the conventional design, since the tilting up direction of the handle is the same as the flipping up direction of the auxiliary lock for unlocking the auxiliary lock, when the user moves his hand in the upward direction, his hand may unintentionally contacts the distal engagement portion of the small lid (auxiliary lid portion) and causes the small lid to be opened. However, according to the storage case 100 in this third embodiment, the auxiliary lid portion 141 can be opened by rotating the operating lever 151 of the auxiliary lock 150 in the downward direction to disengage the auxiliary lock 150. In other words, unlike the conventional configuration, the auxiliary lock 150 can be disengaged by rotating the operating lever 151 in the opposite direction (i.e., direction shown by the thick open arrow (B)) to the user's hand movement direction for tilting up the handle (i.e., direction shown by the thick open arrow (A)). According to the auxiliary lock 150 in this third embodiment, it is possible to prevent the auxiliary lock 150 from being unintentionally unlocked when the user moves the handle 116 into the use position. Therefore, it is possible to prevent the auxiliary lid portion 141 from being unintentionally opened.

[0078] Further, in the auxiliary lock 150, the position of the supporting shaft portion 152a of the engagement lever 152 relative to the supporting shaft portion 151a of the operating lever 151 (i.e., the center distance between the supporting shaft portions 152a, 151a) is appropriately set such that when the operating lever 151 is disengaged, the engagement lever 152 is hanged down from the operating lever 151 and kept away from the locking nail portion 153 by a sufficient distance. Accordingly, the user is only required for rotating the operating lever 151 downward to unlock the auxiliary lock 150, and there is no

need to concern about interference of the engagement lever 152 with the locking nail portion 153, nor does the user have to move the engagement lever 152, for example by his fingertip, so as to prevent the engagement nail portion 152b of the engagement lever 152 from being trapped with the locking nail portion 153. Therefore, the user can easily open the auxiliary lid portion 141, which excels in usability of the storage case 100.

[0079] Further, in the case where the user opens the main lid portion 120 upward while the storage case 100 is placed in the horizontal posture and the operating lever 151 of the auxiliary lock 150 remains unlocked, or in the case where the user lifts the storage case 100 from the horizontal posture to the vertical posture while the operating lever 151 of the auxiliary lock 150 remains unlocked, the engagement lever 152 of the auxiliary lock 150 rotates to approach the locking nail portion 153 while the engagement lever 152 is hanged down from the operating lever 151 because of the action of gravity, and thereafter the engagement nail portion 152b of the engagement lever 152 is caught and engaged with the locking nail portion 153. Therefore, in the case where the user opens the main lid portion 120 or lifts the storage case 100 from the horizontal posture to the vertical posture, while he forgets that the auxiliary lock 150 remains unlocked, it is possible to prevent the auxiliary lid portion 141 from being unintentionally opened. This can also contribute to enhance the usability of the storage case 100.

[0080] Further, according to the auxiliary lock 150 in this third embodiment, if the engagement lever 152 abuts on the guiding surface 153a of the locking nail portion 153 during the process of closing the auxiliary lid portion 141 with the storage case 100 being placed in the horizontal posture, the engagement lever 152 is guided in a direction away from the locking nail portion 153 so as to avoid interference therebetween. Therefore, the auxiliary lid portion 141 can be closed completely.

[0081] Supposing that the guiding surface 153a is not provided on the locking nail portion 153 of the auxiliary lock 150, the engagement lever 152 of the auxiliary lock 150 may be disadvantageously locked during the process of closing the auxiliary lid portion 141 in a state where the engagement lever 152 contacts and abuts on the locking nail portion 153 from above. In this instance, the user cannot completely close the auxiliary lid portion 141, so that the auxiliary lock 150 is not locked. For this reason, in addition to the closing operation of the auxiliary lid portion 141, the user has to move the engagement lever 152 away from the locking nail portion 153, for example by using his fingertip, so as to eliminate the state where the engagement lever 152 abuts on the upper surface of the locking nail portion 153. This tedious and time-consuming operation deteriorates the usability of the storage case 100. However, according to the this embodiment, since the guiding surface 153a is provided on the locking nail portion 153, the auxiliary lid portion 141 can be closed without requiring the above tedious and time-consuming operation, which results in enhancement of the usability of the storage case 100.

[0082] The present invention has been described in detail with reference to the third embodiment. However, the present invention is not limited to this specific embodiment, and various changes and modifications may be made without departing from the scope of the appended claims. For example, instead of providing the guiding surface 153a on the locking nail portion 153, a guiding surface (slanted surface) may be provided on the engagement lever 152 so as to avoid interference (i.e., locked into an abutment state) of the engagement lever 152 with the locking nail portion 153. Further, a guiding surface for avoiding the interference may be provided on both the engagement lever 152 and the locking nail portion 153.

[0083] In the third embodiment, the auxiliary lid portion 141 is closed in the closed state by one auxiliary lock 150. However, two or more auxiliary locks 150, 150 may be employed.

[0084] Further, in the third embodiment, the operating levers 131, 131 of the main locks 130, 130 are rotated upward for unlocking. However, the present invention is not limed to this specific embodiment. The operating levers 131, 131 may be rotated downward for unlocking as with the auxiliary lock 150. In this instance, the operating levers 131, 131 may be supported on the front surface portion 121 of the main lid portion 120 and the locking nail portion 121a may be provided on the front surface portion 111 of the case body 110.

It is explicitly stated that all features disclosed in the description and/or the claims are intended to be disclosed separately and independently from each other for the purpose of original disclosure as well as for the purpose of restricting the claimed invention independent of the composition of the features in the embodiments and/or the claims. It is explicitly stated that all value ranges or indications of groups of entities disclose every possible intermediate value or intermediate entity for the purpose of original disclosure as well as for the purpose of restricting the claimed invention, in particular as limits of value ranges.

Claims

1. A power tool storage case (1) for storing an electric power tool comprising
   a main body casing (2) having a storage portion (4) configured to store an electric power tool,
   a lid member (3) hingedly connected to the main body casing (2) and capable of opening or closing the storage portion (4),
   a sub-storage portion (13) provided at an outer surface of the lid member (3),
   an outer lid (14) hingedly connected to the lid member (3) and capable of opening or closing the sub-storage portion (13),
   a latch (6) is provided for locking and unlocking the

main body casing (2) with the lid member (3), and a locking portion is provided on the outer lid (14),
characterised in that
when the sub-storage portion (13) is closed by the outer lid (14), the locking portion is moved to an engagement position at which the locking portion is engaged with an engageable portion provided on the lid member (3), and the locking portion is movable to a disengagement position at which the locking portion is disengaged from the engageable portion,
the locking portion is a rectangular-shaped plate, and the locking portion is provided to be flush with an upper surface of the outer lid (14).

2. The power tool storage case (1) according to claim 1, further comprising an urging means for urging the locking portion toward the engaging position at which the locking portion is engaged with the engageable portion.

3. The power tool storage case (1) according to claim 1 or 2, wherein the locking portion comprises a locking plate (17) separately provided on the outer lid (14).

4. The power tool storage case (1) according to any one of claims 1 to 3, wherein a pair of latches (6, 6) is provided and wherein each of the main body casing (2) and the lid member (3) is shaped like an open rectangular box, and the main body casing (2) and the lid member (3) are hingedly connected at their rear surfaces, which define a rear surface of the power tool storage case (1), whereas front surfaces of the main body casing (2) and the lid member (3) are locked or unlocked by the pair of latches (6,6), and wherein the sub-storage portion (13) and the outer lid (14) are disposed at an upper surface of the lid member (3).

5. The power tool storage case (1) according to any one of the preceding claims,
wherein a handle (9) is provided in the right-and-left direction at a front surface of the power tool storage case (1),
wherein a partition projection which is parallel to the handle (9) is provided between the locking portion and the handle (9) on one of the lid member (3) and the outer lid (14), when viewed in a direction perpendicular to the right-and-left direction along the front surface,
wherein a pair of latches is provided, and
wherein the handle (9) is arranged between the pair of latches (6, 6) and the locking portion is provided between side portions of the handle (9), when viewed in the right-and-left direction.

6. The power tool storage case (1) according to claim 5, wherein a pair of right and left projections are provided at the front surface of the power tool storage case (1) in such a manner as to protrude frontward from the latches (6,6) held in a locked state, and wherein both ends of the handle (9) are rotatably connected to the pair of right and left projections.

7. The power tool storage case (1) according to claim 6, wherein the pair of right and left projections are continuously formed at both end portions of the partition projection.

8. The power tool storage case (1) according to claim 6 or 7, wherein a pair of ribs extending in a vertical direction are formed outward of the handle (9), continuously from the pair of right and left projections.

9. The power tool storage case (1) according to claim 3, wherein the locking plate (17) has a shaft (5) and the outer lid (14) has receiving holes for receiving the shaft (5), so that the locking plate (17) is rotatably supported on the outer lid (14) by fitting the shaft (5) into the receiving holes.

10. The power tool storage case (1) according to claim 3 or 9, wherein the locking plate (17) is supported in a window or a cutout formed in the outer lid (14) and rotatable around an axis parallel to that of a hinge of the lid member (3), wherein a plate-like stopper strip (19) having a barb (20) at its lower end is provided on and protrudes downward from a lower surface of the locking plate (17) and a stopper projection (29) engageable with the barb (20) of the stopper strip is provided on and protrudes upward from a bottom surface of the lid member (3), the barb (20) and the stopper projection (29) being engageable with each other when the outer lid (14) is closed, and wherein the urging means is provided on the outer lid (14) so that the locking plate (17) is urged toward the engagement position at which the barb (20) is engaged with the stopper projection (29).

11. The power tool storage case (1) according to claim 10, wherein each of the barb (20) and the stopper projection (29) has a slanted surface by which the barb (20) and the stopper projection (29) slip on and pass each other to guide the locking plate (17) to the engagement position.

12. The power tool storage case (1) according to any one of claims 9 to 11, further comprising an urging means for urging the locking portion toward the engaging position at which the locking portion is engaged with the engageable portion,
wherein the locking portion comprises a locking plate (17) separately provided on the outer lid (14), and
wherein the urging means is a coil spring (27) positioned between a spring seat plate (26) provided on the outer lid (14) and the locking plate (17).

Klein Tools Ex. 1014, Page 12 of 35

13. The power tool storage case (1) according to claim 12, wherein a guide rod is provided on and protrudes downward from the lower surface of the locking plate (17) along the coil spring (27), so as to prevent buckling of the coil spring (27).

14. The power tool storage case (1) according to any one of claims 9 to 13, wherein an end portion of the locking plate (17) abuts on the outer lid (14) at the engagement position, so that the locking plate (17) is held in a position flush with or lower than the outer surface of the outer lid (14).

15. The power tool storage case (1) according to claim 10, wherein a finger rest hole (18) is formed in the locking plate (17), through which the locking plate (17) is rotated into the disengagement position, or wherein a circular recessed portion (44) is formed in an upper surface of the locking plate (17), through which the locking plate (17) is rotated into the disengagement position.

Patentansprüche

1. Kraftwerkzeugaufbewahrungsbehälter (1) zum Aufbewahren eines elektrischen Kraftwerkzeuges, mit
einem Hauptkörpergehäuse (2), das einen Aufbewahrungsteil (4) aufweist, der zum Aufbewahren eines elektrischen Kraftwerkzeuges konfiguriert ist,
einem Deckelbauteil (3), das schwenkbar mit dem Hauptkörpergehäuse (2) verbunden ist und den Aufbewahrungsteil (4) öffnen und schließen kann,
einem zusätzlichen Aufbewahrungsteil (13), der an einer äußeren Oberfläche des Deckelbauteils (3) vorgesehen ist,
einem äußeren Deckel (14), der schwenkbar mit dem Deckelbauteil (3) verbunden ist und den zusätzlichen Aufbewahrungsteil (13) öffnen und schließen kann,
einem Verschlussriegel (6), die zum Verriegeln und Entriegeln des Hauptkörpergehäuses (2) mit dem Deckelbauteil (3) vorgesehen ist, und
einem Verriegelungsteil, der an dem äußeren Deckel (14) vorgesehen ist,
dadurch gekennzeichnet, dass
wenn der zusätzliche Aufbewahrungsteil (13) durch den äußeren Deckel (14) geschlossen wird, der Verriegelungsteil in eine Eingriffsposition bewegt wird, in welcher der Verriegelungsteil mit einem eingreifbaren Teil, der an dem Deckelbauteil (3) vorgesehen ist, in Eingriff steht, und der Verriegelungsteil in eine Entriegelungsposition bewegbar ist, in welcher der Verriegelungsteil von dem eingreifbaren Teil entriegelt ist,
der Verriegelungsteil eine rechteckförmige Platte ist, und
der Verriegelungsteil so vorgesehen ist, dass er bündig mit einer oberen Oberfläche des äußeren Deckels (14) ist.

2. Kraftwerkzeugaufbewahrungsbehälter (1) nach Anspruch 1, der weiter ein Vorspannmittel zum Vorspannen des Verriegelungsteils in Richtung der Verriegelungsposition aufweist, in welcher der Verriegelungsteil in Eingriff mit dem eingreifbaren Teil steht.

3. Kraftwerkzeugaufbewahrungsbehälter (1) nach Anspruch 1 oder 2, bei dem der Verriegelungsteil eine Verriegelungsplatte (17) aufweist, die separat von dem äußeren Deckel (14) vorgesehen ist.

4. Kraftwerkzeugaufbewahrungsbehälter (1) nach einem der Ansprüche 1 bis 3, bei dem ein Paar von Verschlussriegel (6, 6) vorgesehen ist und bei dem jeder von dem Hauptkörpergehäuse (2) und dem Deckelbauteil (3) wie eine offene rechteckige Box geformt ist, und das Hauptkörpergehäuse (2) und das Deckelbauteil (3) schwenkbar miteinander an deren hinteren Oberflächen verbunden sind, die eine hintere Oberfläche des Kraftwerkzeugaufbewahrungsbehälters (1) definieren, wohingegen vordere Oberflächen des Hauptkörpergehäuses (2) und des Deckelbauteils (3) durch das Paar der Verschlussriegel (6, 6) verriegelt oder entriegelt werden und bei demder zusätzliche Aufbewahrungsteil (13) und der äußere Deckel (14) an einer oberen Oberfläche des Deckelbauteils (3) vorgesehen sind.

5. Kraftwerkzeugaufbewahrungsbehälter (1) nach einem der vorhergehenden Ansprüche,
bei dem ein Handgriff (9) in der Rechts-Links-Richtung an einer vorderen Oberfläche des Kraftwerkzeugaufbewahrungsbehälters (1) vorgesehen ist,
bei dem ein Unterteilungsvorsprung, der parallel zu dem Handgriff (9) ist, zwischen dem Verriegelungsteil und dem Handgriff (9) auf einem von dem Deckelbauteil (3) und dem äußeren Deckel (14) vorgesehen ist, wenn in einer Richtung senkrecht zu der Rechts-Links-Richtung entlang der vorderen Oberfläche gesehen,
bei dem ein Paar von Verschlussriegel vorgesehen ist, und
bei dem der Handgriff (9) zwischen dem Paar der Verschlussriegel (6, 6) angeordnet ist und der Verriegelungsteil zwischen Seitenteilen des Handgriffes (9) vorgesehen ist, wenn in der Rechts-Links-Richtung gesehen.

6. Kraftwerkzeugaufbewahrungsbehälter (1) nach Anspruch 5, bei dem ein Paar von einem rechten und einem linken Vorsprung an der vorderen Oberfläche des Kraftwerkzeugaufbewahrungsbehälters (1) in einer solchen Art vorgesehen ist, dass es nach vorne von den Verschlussriegeln (6, 6), die in einem ver-

riegelten Zustand gehalten sind, vorsteht, und bei dem beide Enden des Handgriffes (9) drehbar mit dem Paar des rechten und des linken Vorsprungs verbunden sind.

7. Kraftwerkzeugaufbewahrungsbehälter (1) nach Anspruch 6, bei dem das Paar des linken und des rechten Vorsprungs fortlaufend mit beiden Endteilen des Unterteilungsvorsprungs ausgebildet ist.

8. Kraftwerkzeugaufbewahrungsbehälter (1) nach Anspruch 6 oder 7, bei dem ein Paar von Rippen, die sich in einer vertikalen Richtung erstrecken, an dem Äußeren des Handgriffes (9) fortlaufend mit dem Paar des rechten und des linken Vorsprungs ausgebildet ist.

9. Kraftwerkzeugaufbewahrungsbehälter (1) nach Anspruch 3, bei dem die Verriegelungsplatte (17) einen Schaft (5) aufweist und der äußere Deckel (14) Aufnahmelöcher zum Aufnehmen des Schaftes (5) aufweist, so dass die Verriegelungsplatte (17) drehbar an dem äußeren Deckel (14) durch Passen des Schaftes (5) in die Aufnahmelöcher gelagert ist.

10. Kraftwerkzeugaufbewahrungsbehälter (1) nach Anspruch 3 oder 9, bei dem die Verriegelungsplatte (17) in einem Fenster oder Ausschnitt, der in dem äußeren Deckel (14) ausgebildet ist, gelagert ist und drehbar um eine Achse parallel zu der eines Gelenkes des Deckelbauteils (3) ist, bei dem ein plattenförmiger Anschlagstreifen (19), der einen Widerhaken (20) an seinem unteren Ende aufweist, an einer unteren Oberfläche der Verriegelungsplatte (17) vorgesehen ist und von dieser nach unten vorsteht und ein Anschlagvorsprung (29), der eingreifbar mit dem Widerhaken (20) des Anschlagstreifens ist, an einer Bodenoberfläche des Deckelbauteils (3) vorgesehen ist und nach oben von dieser steht, bei dem der Widerhaken (20) und der Anschlagvorsprung (29) miteinander eingreifbar sind, wenn der äußere Deckel (14) geschlossen wird, und bei dem das Vorspannmittel an dem äußeren Deckel (14) so vorgesehen ist, dass die Verriegelungsplatte (17) in Richtung der Eingriffsposition vorgespannt wird, in welcher der Widerhaken (20) in Eingriff mit dem Anschlagvorsprung (29) steht.

11. Kraftwerkzeugaufbewahrungsbehälter (1) nach Anspruch 10, bei dem jeder von dem Widerhaken (20) und dem Anschlagvorsprung (29) eine geneigte Oberfläche aufweist, auf welchen der Widerhaken (20) und der Anschlagvorsprung (29) rutschen und einander passen, um die Verriegelungsplatte (17) in die Eingriffsposition zu führen.

12. Kraftwerkzeugaufbewahrungsbehälter (1) nach einem der Ansprüche 9 bis 11, der weiter ein Vorspannmittel zum Vorspannen des Verriegelungsteils in Richtung der Eingriffsposition aufweist, in welcher der Verriegelungsteil in Eingriff mit dem eingreifbaren Teil steht,
bei dem der Verriegelungsteil eine Verriegelungsplatte (17) aufweist, die separat von dem äußeren Deckel (14) vorgesehen ist, und
bei dem das Vorspannmittel eine Schraubenfeder (27) ist, die zwischen einer Federsitzplatte (26), die an dem äußeren Deckel (14) vorgesehen ist, und der Verriegelungsplatte (17) vorgesehen ist.

13. Kraftwerkzeugaufbewahrungsbehälter (1) nach Anspruch 12, bei dem ein Führungsstab an der unteren Oberfläche der Verriegelungsplatte (17) vorgesehen ist und nach unten von dieser entlang der Schraubenfeder (27) vorsteht, um so ein Verbiegen der Schraubenfeder (27) zu verhindern.

14. Kraftwerkzeugaufbewahrungsbehälter (1) nach einem der Ansprüche 9 bis 13, bei dem ein Endteil der Verriegelungsplatte (17) gegen den äußeren Deckel (14) in der Eingriffsposition stößt, so dass die Verriegelungsplatte (17) in einer Position gehalten ist, die bündig mit oder niedriger als die äußere Oberfläche des äußeren Deckels (14) ist.

15. Kraftwerkzeugaufbewahrungsbehälter (1) nach Anspruch 10, bei dem ein Fingerloch (18) an der Verriegelungsplatte (17) ausgebildet ist, durch welches die Verriegelungsplatte (17) in die Entriegelungsposition gedreht wird, oder
bei dem ein kreisrunder ausgenommener Teil (44) an einer oberen Oberfläche der Verriegelungsplatte (17) ausgebildet ist, durch welchen die Verriegelungsplatte (17) in die Entriegelungsposition gedreht wird.

Revendications

1. Boîtier de stockage d'outil électrique (1) destiné à stocker un outil électrique comprenant :

un carter de corps principal (2) comportant une portion de stockage (4) configurée pour stocker un outil électrique,
un organe de couvercle (3) relié en charnière au carter de corps principal (2) et capable d'ouvrir ou de fermer la portion de stockage (4),
une portion de sous-stockage (13) prévue à une surface extérieure de l'organe de couvercle (3),
un couvercle extérieur (14) relié en charnière à l'organe de couvercle (3) et capable d'ouvrir ou de fermer la portion de sous-stockage (13),
un verrou (6) est prévu pour verrouiller et déverrouiller le carter de corps principal (2) avec l'organe de couvercle (3), et

une portion de verrouillage est prévue sur le couvercle extérieur (14),
caractérisé en ce que
lorsque la portion de sous-stockage (13) est fermée par le couvercle extérieur (14), la portion de verrouillage est déplacée à une position de mise en prise à laquelle la portion de verrouillage est mise en prise avec une portion pouvant être mise en prise prévue sur l'organe de couvercle (3), et la portion de verrouillage peut être déplacée à une position de mise hors prise à laquelle la portion de verrouillage est mise hors prise de la portion pouvant être mise en prise,
la portion de verrouillage est une plaque de forme rectangulaire, et
la portion de verrouillage est prévue pour être arasée avec une surface supérieure du couvercle extérieur (14).

2. Boîtier de stockage d'outil électrique (1) selon la revendication 1, comprenant en outre un moyen de poussée pour pousser la portion de verrouillage vers la position de mise en prise à laquelle la portion de verrouillage est mise en prise avec la portion pouvant être mise en prise.

3. Boîtier de stockage d'outil électrique (1) selon la revendication 1 ou 2, dans lequel la portion de verrouillage comprend une plaque de verrouillage (17) prévue séparément sur le couvercle extérieur (14).

4. Boîtier de stockage d'outil électrique (1) selon l'une quelconque des revendications 1 à 3, dans lequel une paire de verrous (6, 6) est prévue et dans lequel chacun du carter de corps principal (2) et de l'organe de couvercle (3) a la forme d'une boîte rectangulaire ouverte, et le carter de corps principal (2) et l'organe de couvercle (3) sont reliés en charnière à leurs surfaces arrière, qui définissent une surface arrière du boîtier de stockage d'outil électrique (1), tandis que des surfaces avant du carter de corps principal (2) et de l'organe de couvercle (3) sont verrouillées ou déverrouillées par la paire de verrous (6, 6), et dans lequel la portion de sous-stockage (13) et le couvercle extérieur (14) sont disposés à une surface supérieure de l'organe de couvercle (3).

5. Boîtier de stockage d'outil électrique (1) selon l'une quelconque des revendications précédentes,
dans lequel une poignée (9) est prévue dans le sens vers la droite et vers la gauche à une surface avant du boîtier de stockage d'outil électrique (1),
dans lequel une saillie de partition qui est parallèle à la poignée (9) est prévue entre la portion de verrouillage et la poignée (9) sur l'un de l'organe de couvercle (3) et du couvercle extérieur (14), en vue dans un sens perpendiculaire au sens vers la droite et vers la gauche le long de la surface avant,
dans lequel une paire de verrous est prévue, et
dans lequel la poignée (9) est agencée entre la paire de verrous (6, 6) et la portion de verrouillage est prévue entre des portions latérales de la poignée (9), en vue dans le sens vers la droite et vers la gauche.

6. Boîtier de stockage d'outil électrique (1) selon la revendication 5, dans lequel une paire de saillies vers la droite et vers la gauche sont prévues à la surface avant du boîtier de stockage d'outil électrique (1) de manière à faire saillie vers l'avant depuis les verrous (6, 6) maintenus dans un état verrouillé, et dans lequel les deux extrémités de la poignée (9) sont reliées, de manière à pouvoir tourner, à la paire de saillies vers la droite et vers la gauche.

7. Boîtier de stockage d'outil électrique (1) selon la revendication 6, dans lequel la paire de saillies vers la droite et vers la gauche sont formées continuellement aux deux portions d'extrémité de la saillie de partition.

8. Boîtier de stockage d'outil électrique (1) selon la revendication 6 ou 7, dans lequel une paire de nervures s'étendant dans un sens vertical sont formées vers l'extérieur de la poignée (9), continuellement depuis la paire de saillies vers la droite et vers la gauche.

9. Boîtier de stockage d'outil électrique (1) selon la revendication 3, dans lequel la plaque de verrouillage (17) a un arbre (5) et le couvercle extérieur (14) comporte des trous de réception pour recevoir l'arbre (5), de sorte que la plaque de verrouillage (17) soit supportée, de manière à pouvoir tourner, sur le couvercle extérieur (14) en ajustant l'arbre (5) dans les trous de réception.

10. Boîtier de stockage d'outil électrique (1) selon la revendication 3 ou 9, dans lequel la plaque de verrouillage (17) est supportée dans une fenêtre ou une découpe formée dans le couvercle extérieur (14) et rotative autour d'un axe parallèle à celui d'une charnière de l'organe de couvercle (3), dans lequel une bande de butées en forme de plaque (19) ayant un ardillon (20) à son extrémité inférieure est prévue sur une surface inférieure de la plaque de verrouillage (17) et fait saillie vers le bas à partir de celle-ci et une saillie de butée (29) pouvant être mise en prise avec l'ardillon (20) de la bande de butées est prévue sur une surface inférieure de l'organe de couvercle (3) et fait saillie vers le haut à partir de celle-ci, l'ardillon (20) et la saillie de butée (29) pouvant se mettre en prise l'un avec l'autre lorsque le couvercle extérieur (14) est fermé, et dans lequel le moyen de poussée est prévu sur le couvercle extérieur (14) de sorte que la plaque de verrouillage (17) soit poussée vers la position de mise en prise à laquelle l'ardillon (20) est mis en prise avec la saillie de butée (29).

Klein Tools Ex. 1014, Page 15 of 35

11. Boîtier de stockage d'outil électrique (1) selon la revendication 10, dans lequel chacun de l'ardillon (20) et la saillie de butée (29) a une surface inclinée par laquelle l'ardillon (20) et la saillie de butée (29) coulissent l'un sur l'autre et passent l'un à côté de l'autre pour guider la plaque de verrouillage (17) jusqu'à la position de mise en prise.

12. Boîtier de stockage d'outil électrique (1) selon l'une quelconque des revendications 9 à 11, comprenant en outre un moyen de poussée pour pousser la portion de verrouillage vers la position de mise en prise à laquelle la portion de verrouillage est mise en prise avec la portion pouvant être mise en prise,
dans lequel la portion de verrouillage comprend une plaque de verrouillage (17) prévue séparément sur le couvercle extérieur (14), et
dans lequel le moyen de poussée est un ressort hélicoïdal (27) positionné entre une plaque de siège de ressort (26) prévue sur le couvercle extérieur (14) et la plaque de verrouillage (17).

13. Boîtier de stockage d'outil électrique (1) selon la revendication 12, dans lequel une tige de guidage est prévue sur la surface inférieure de la plaque de verrouillage (17) le long du ressort hélicoïdal (27) et fait saillie vers le bas à partir de celle-ci, de manière à empêcher un fléchissement du ressort hélicoïdal (27).

14. Boîtier de stockage d'outil électrique (1) selon l'une quelconque des revendications 9 à 13, dans lequel une portion d'extrémité de la plaque de verrouillage (17) vient en butée contre le couvercle extérieur (14) à la position de mise en prise, de sorte que la plaque de verrouillage (17) soit maintenue à une position arasée avec la surface extérieure du couvercle extérieur (14) ou au-dessous de celle-ci.

15. Boîtier de stockage d'outil électrique (1) selon la revendication 10, dans lequel un trou repose-doigt (18) est formé dans la plaque de verrouillage (17), à travers lequel la plaque de verrouillage (17) est tournée à la position de mise hors prise, ou
dans lequel une portion évidée circulaire (44) est formée dans une surface supérieure de la plaque de verrouillage (17), à travers laquelle la plaque de verrouillage (17) est tournée à la position de mise hors prise.

Klein Tools Ex. 1014, Page 16 of 35

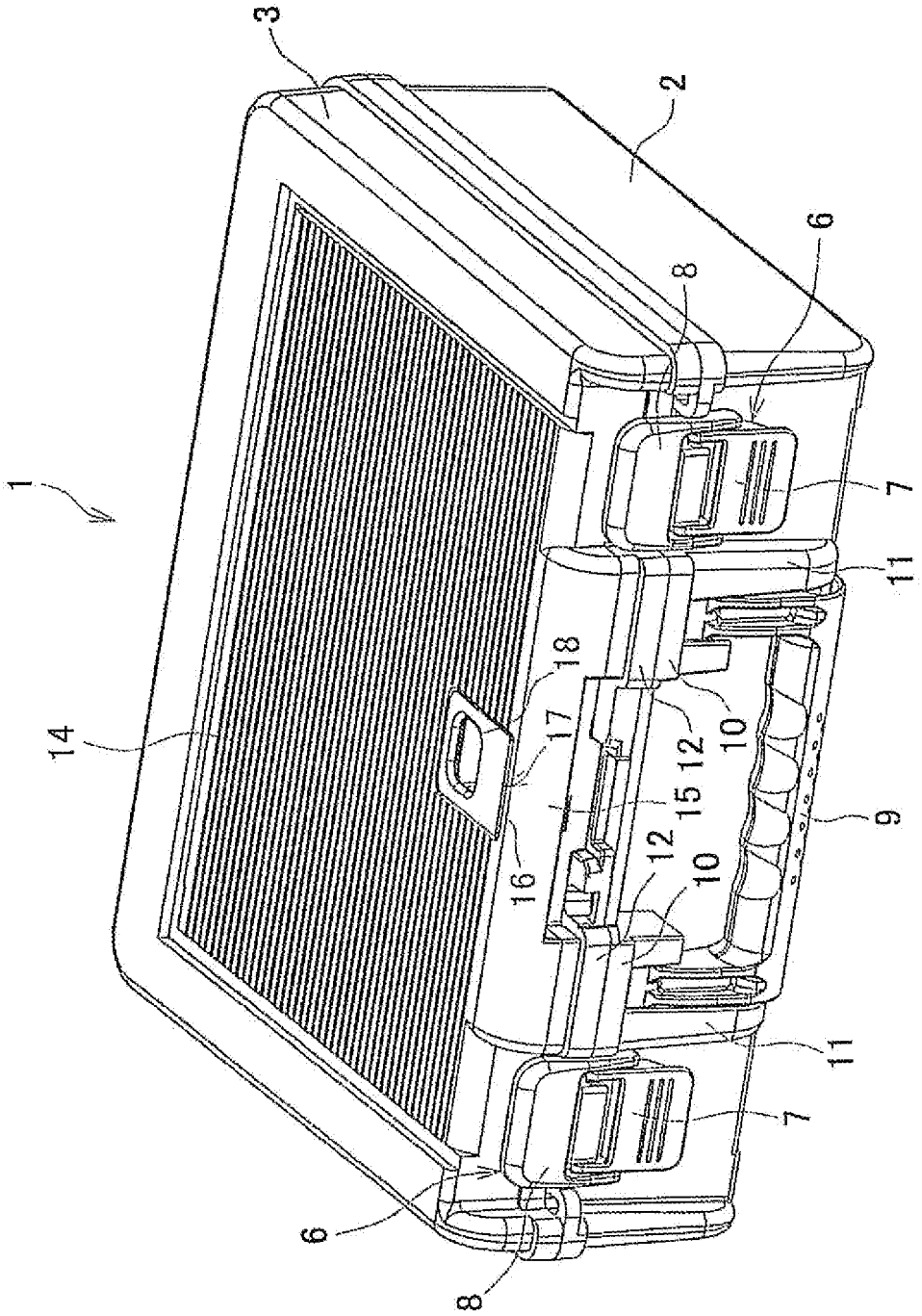

FIG.1

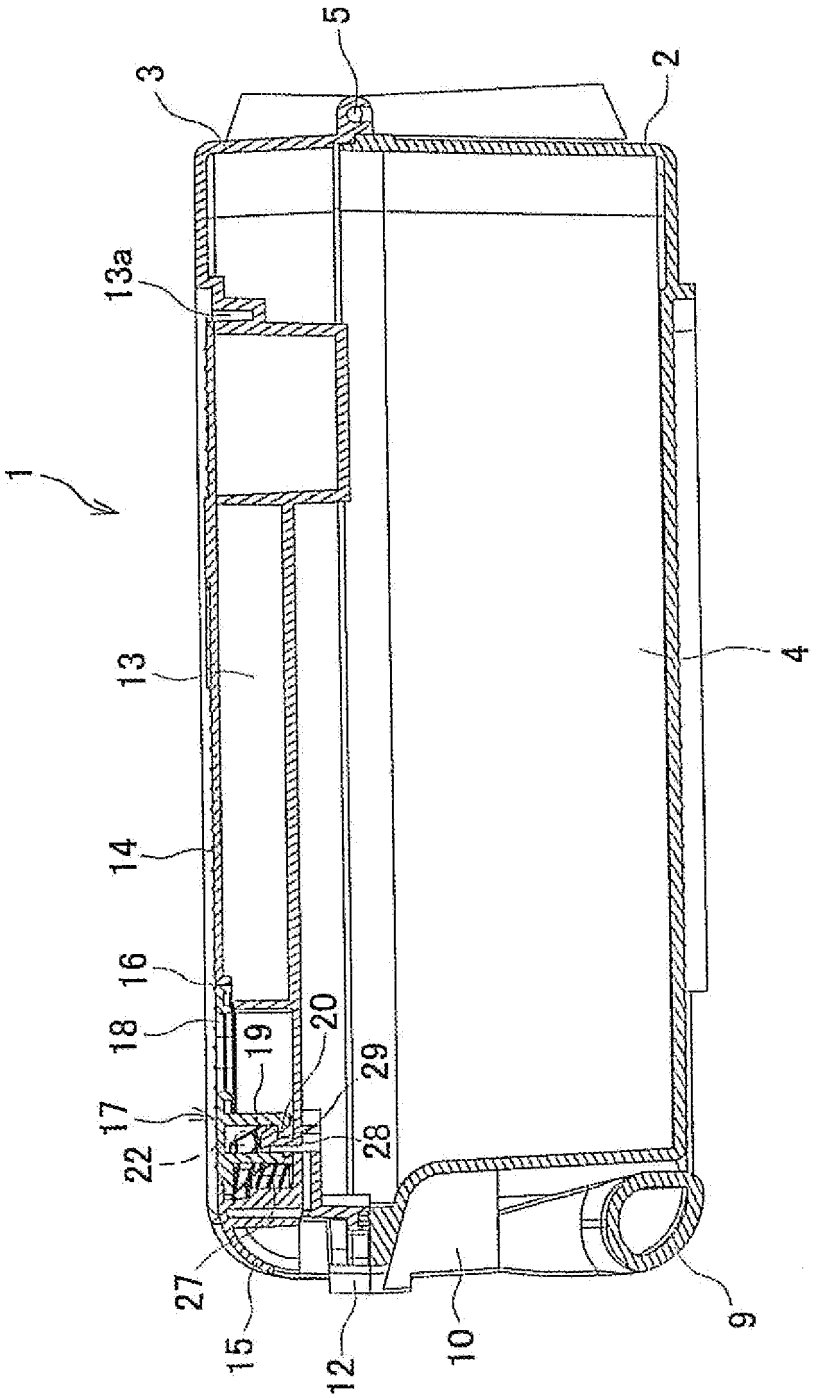

FIG.2

FIG.3

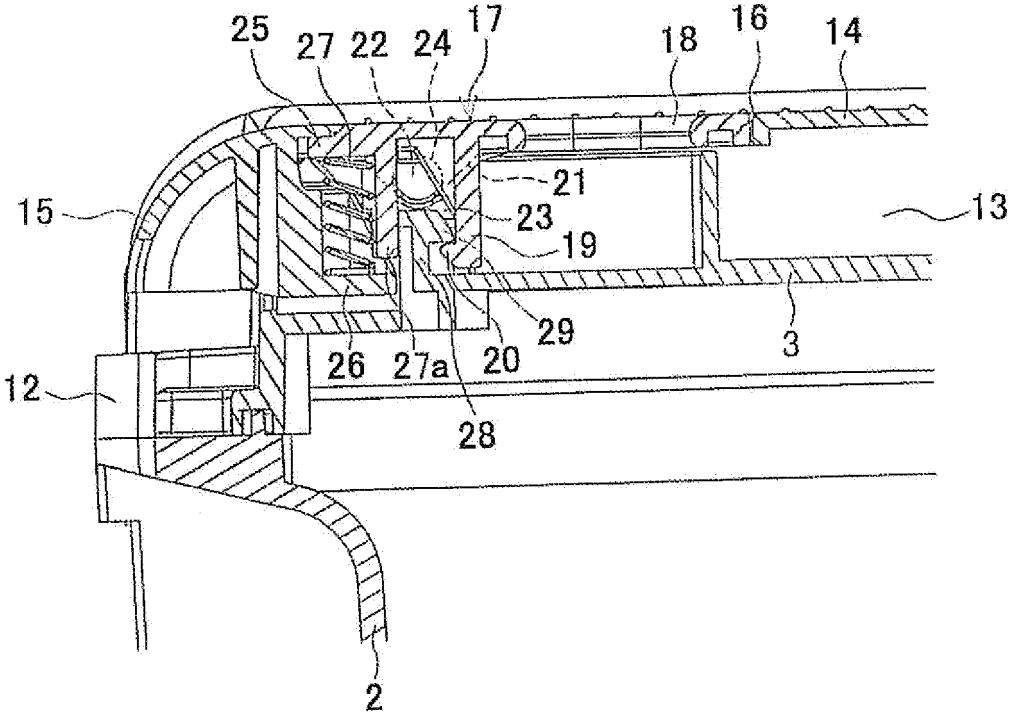

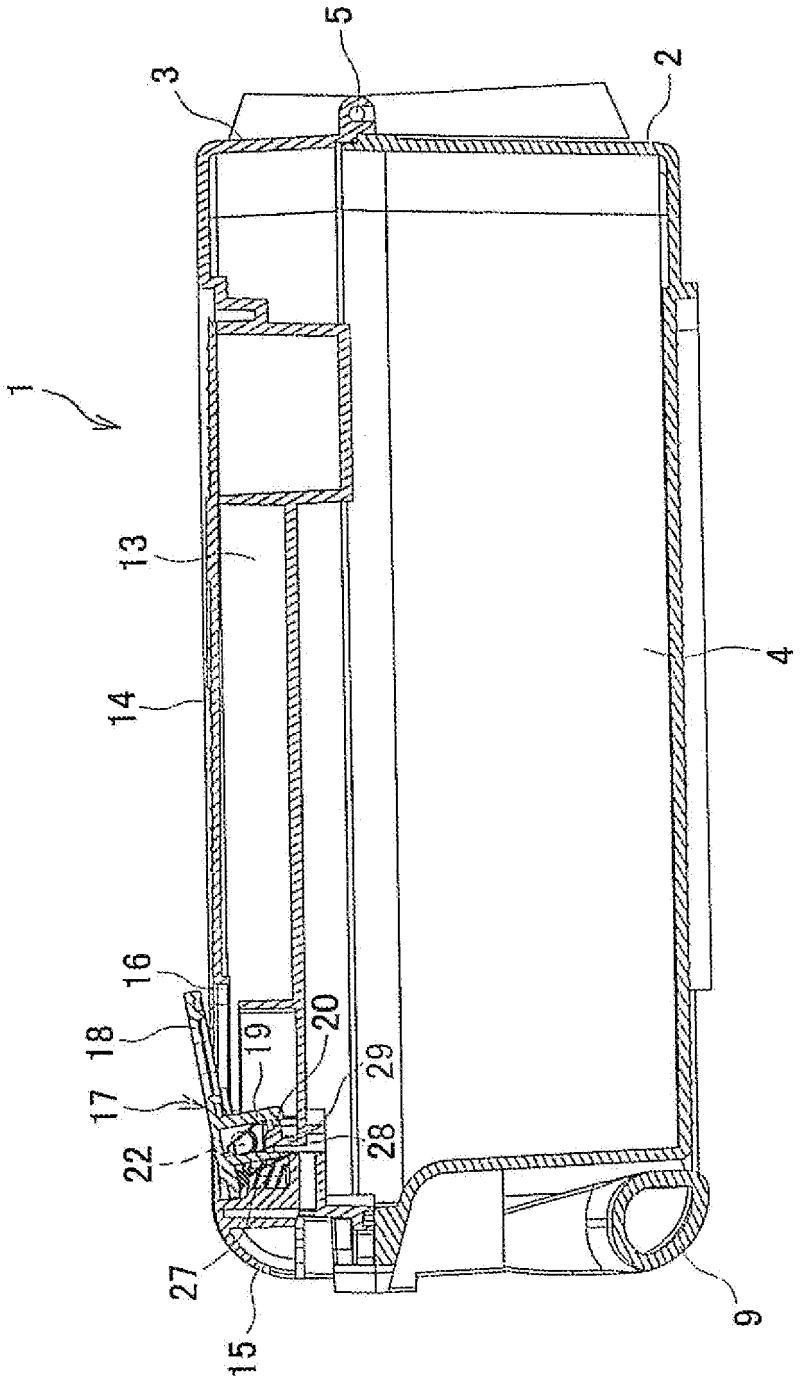

FIG.4

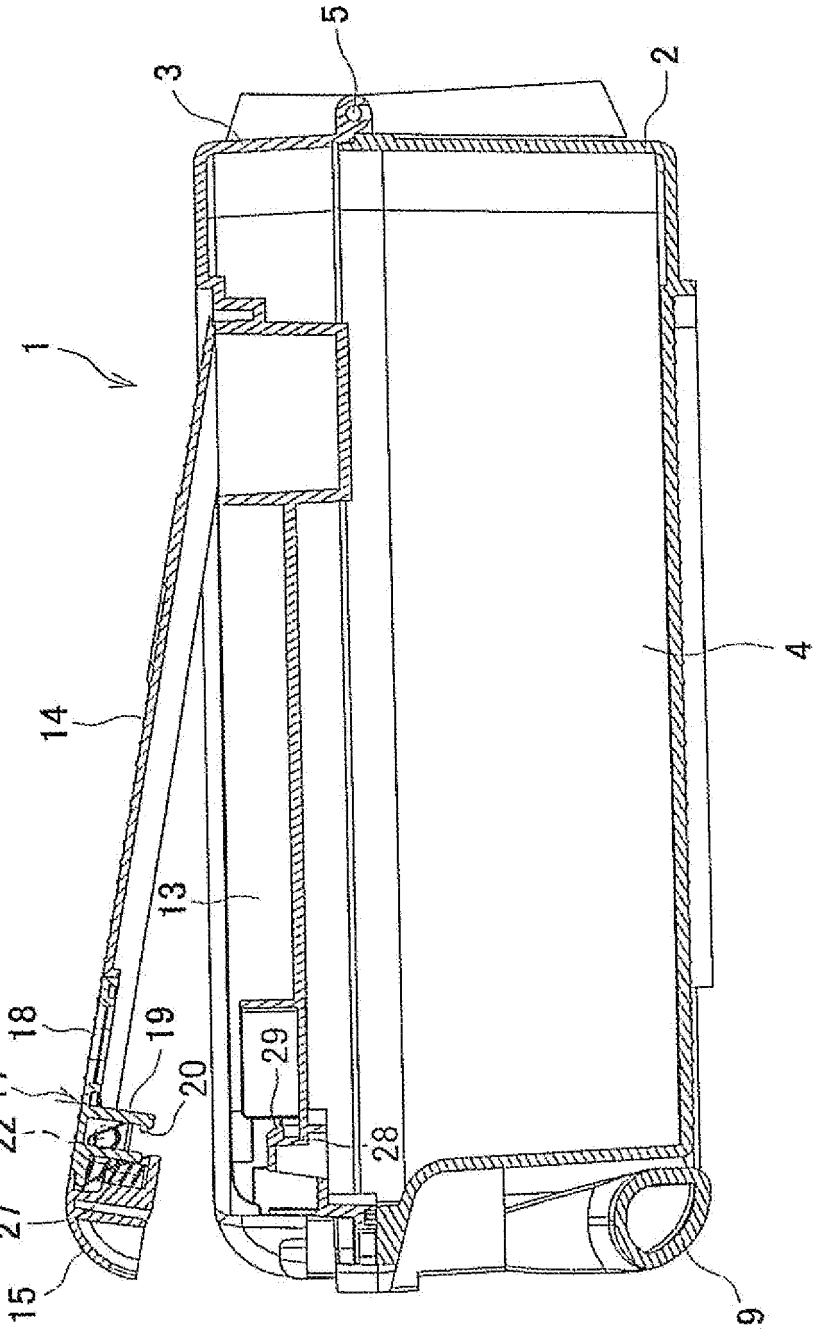

FIG.5

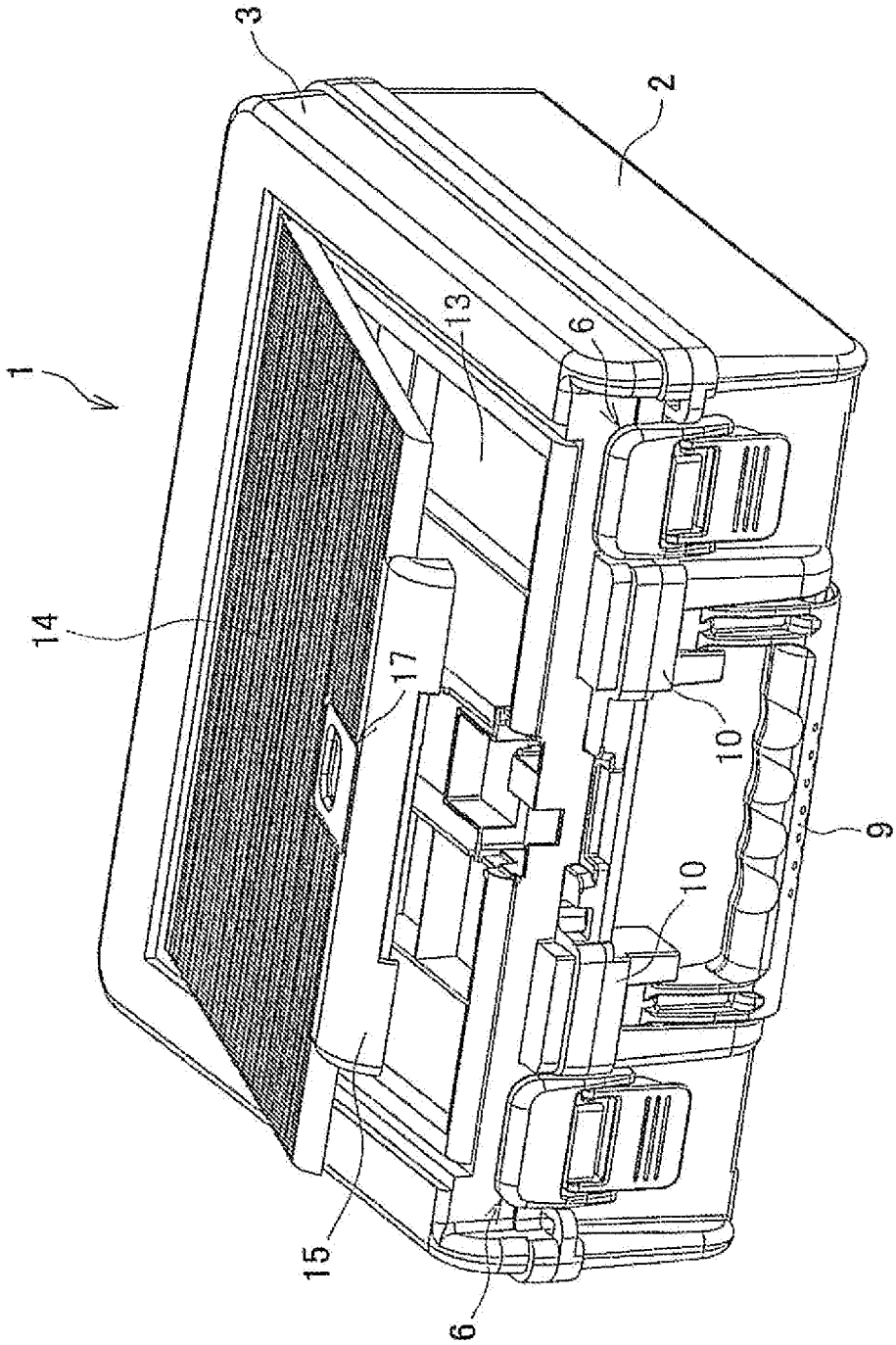

FIG.6

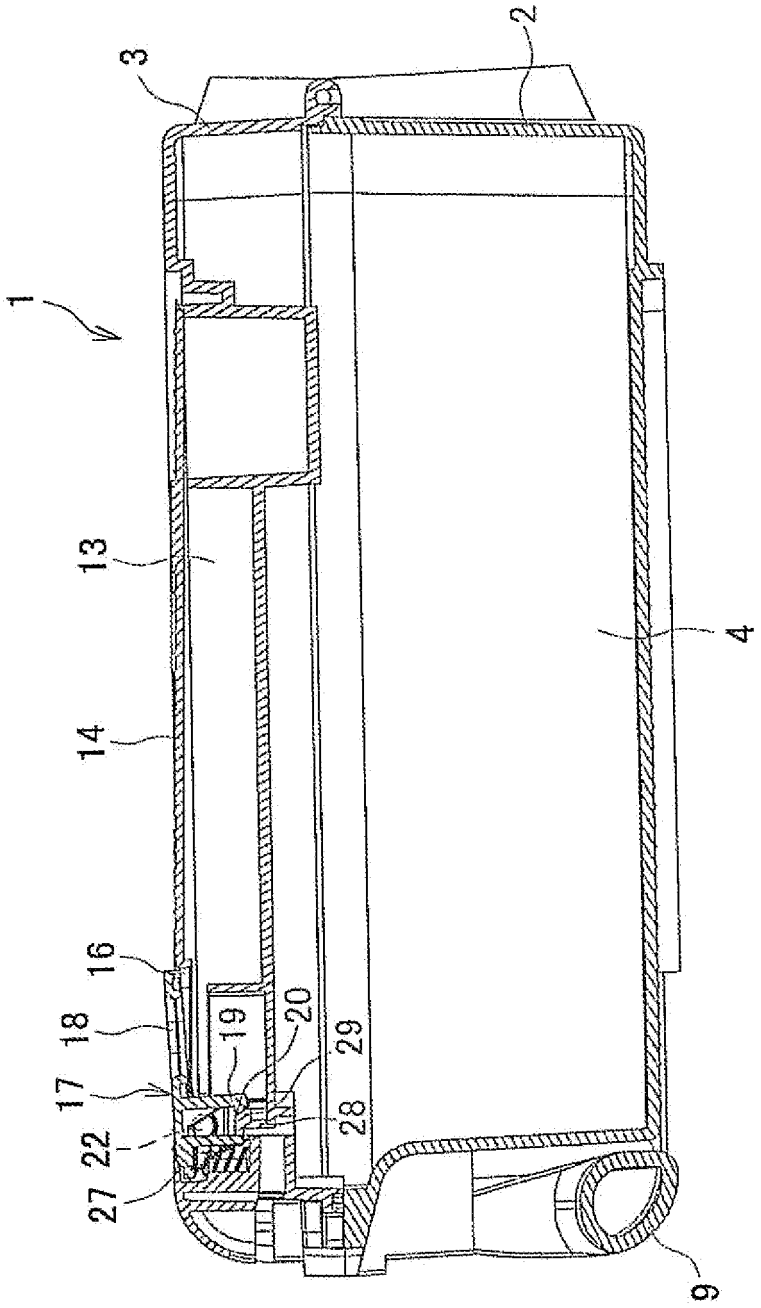

FIG.7

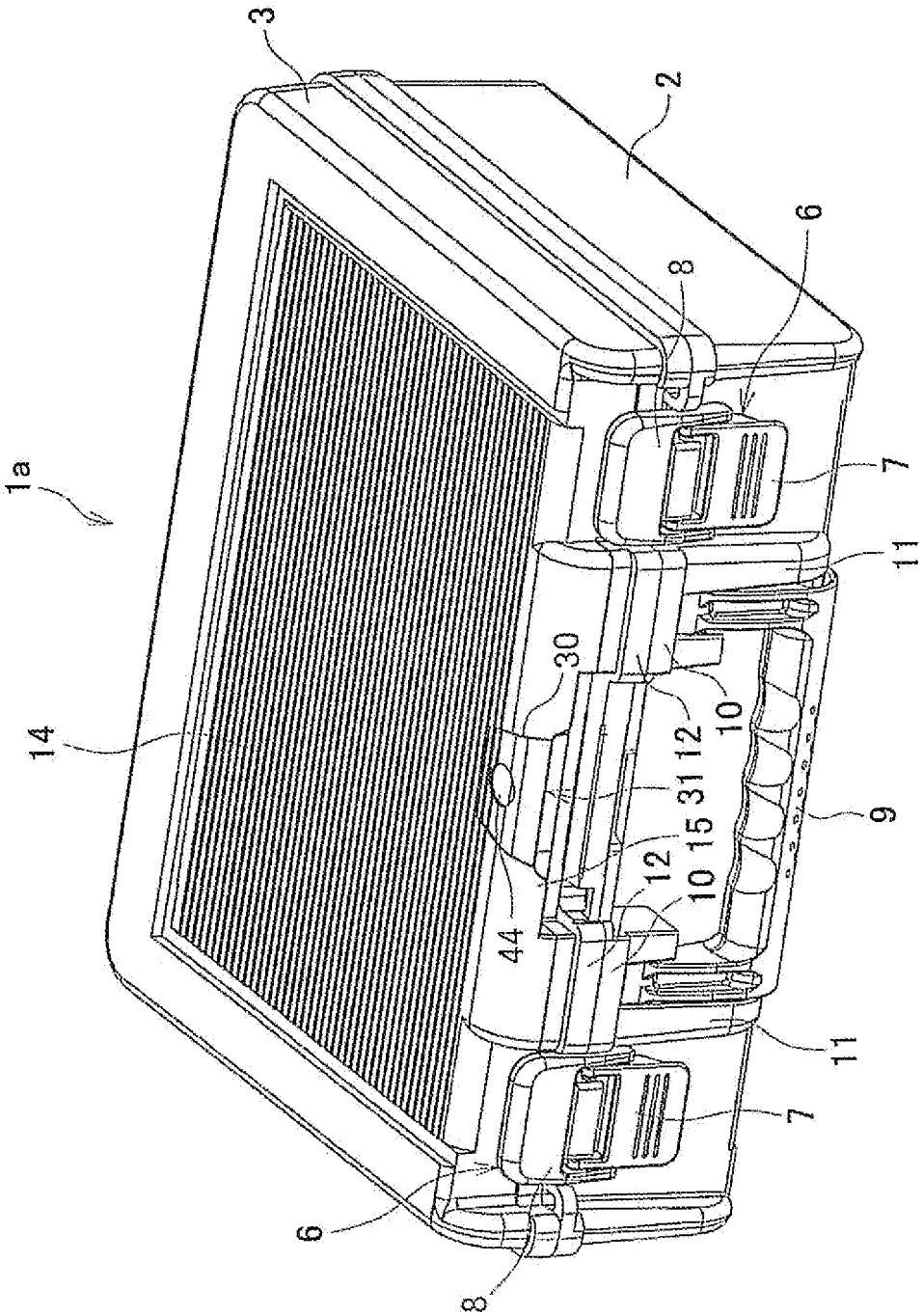

FIG.8

FIG.9

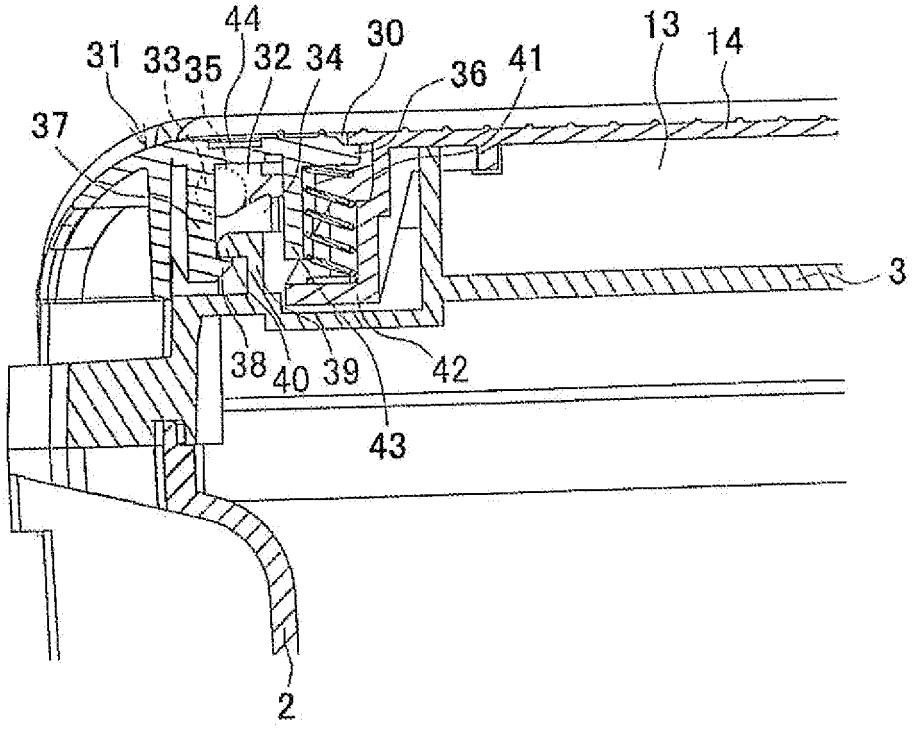

FIG.10

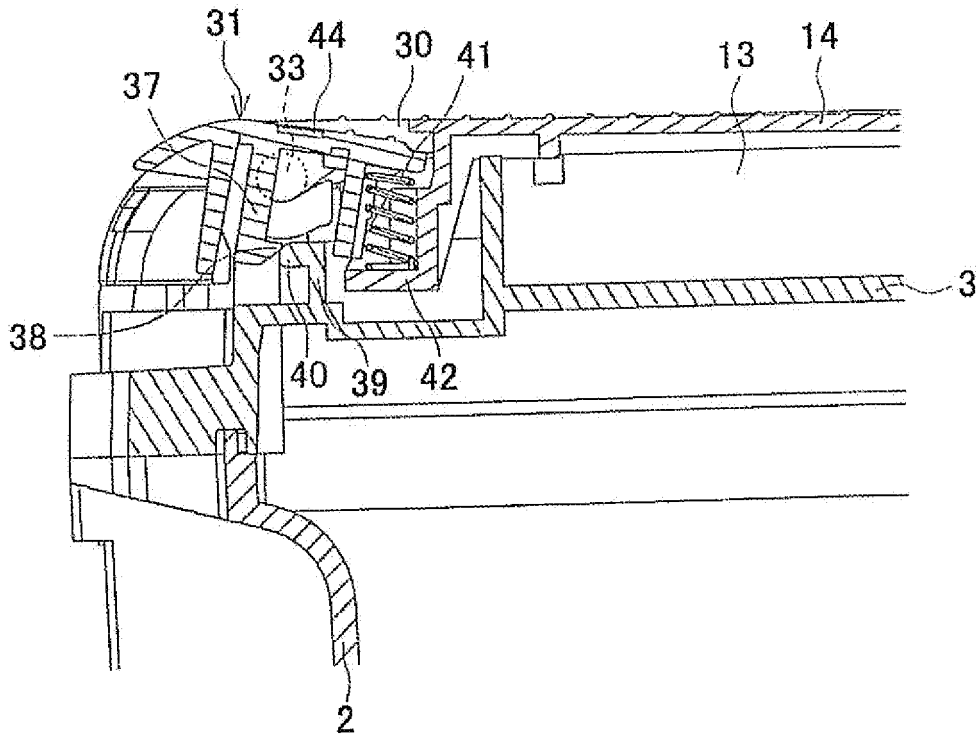

FIG.11

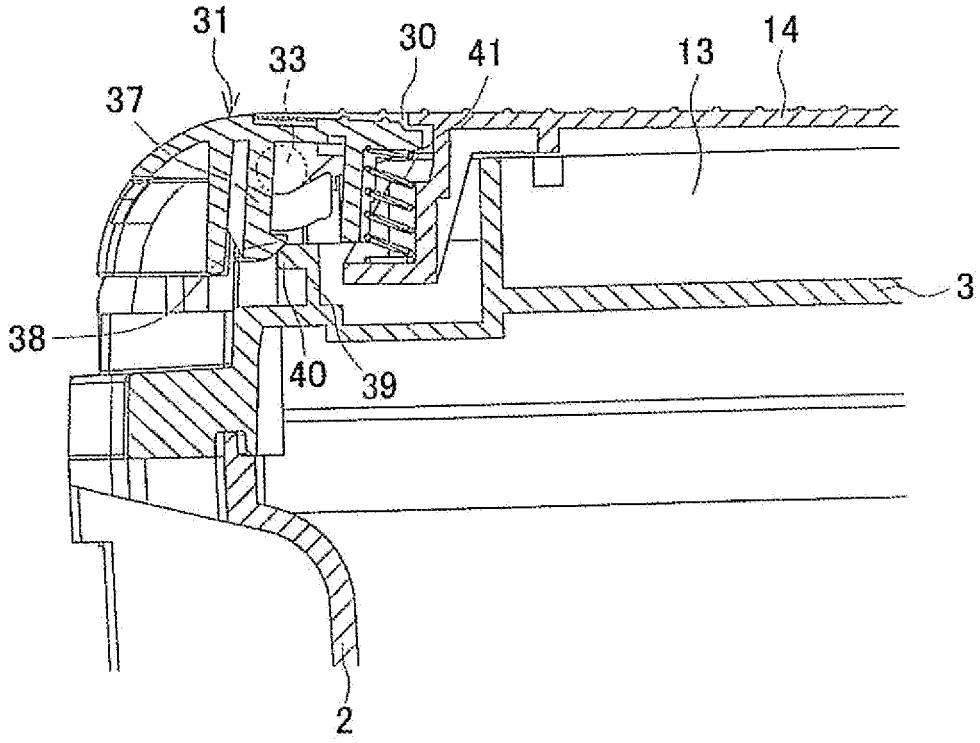

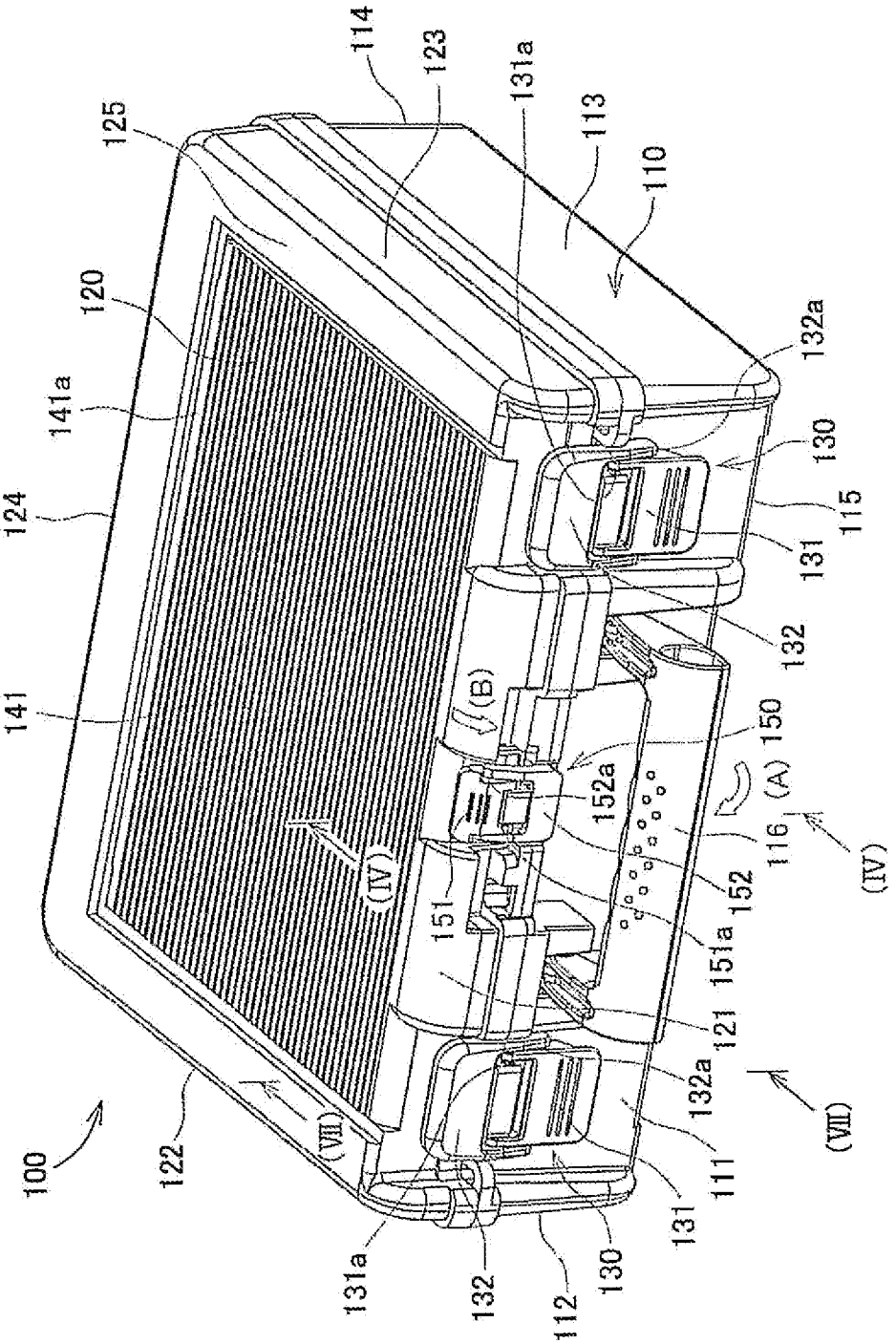
100
110
111
112
113
114
115
116
120
121
122
123
124
125
130
131
131a
132
132a
141
141a
150
151
151a
152
152a
(A)
(B)
(IV)
(VII)

FIG.12

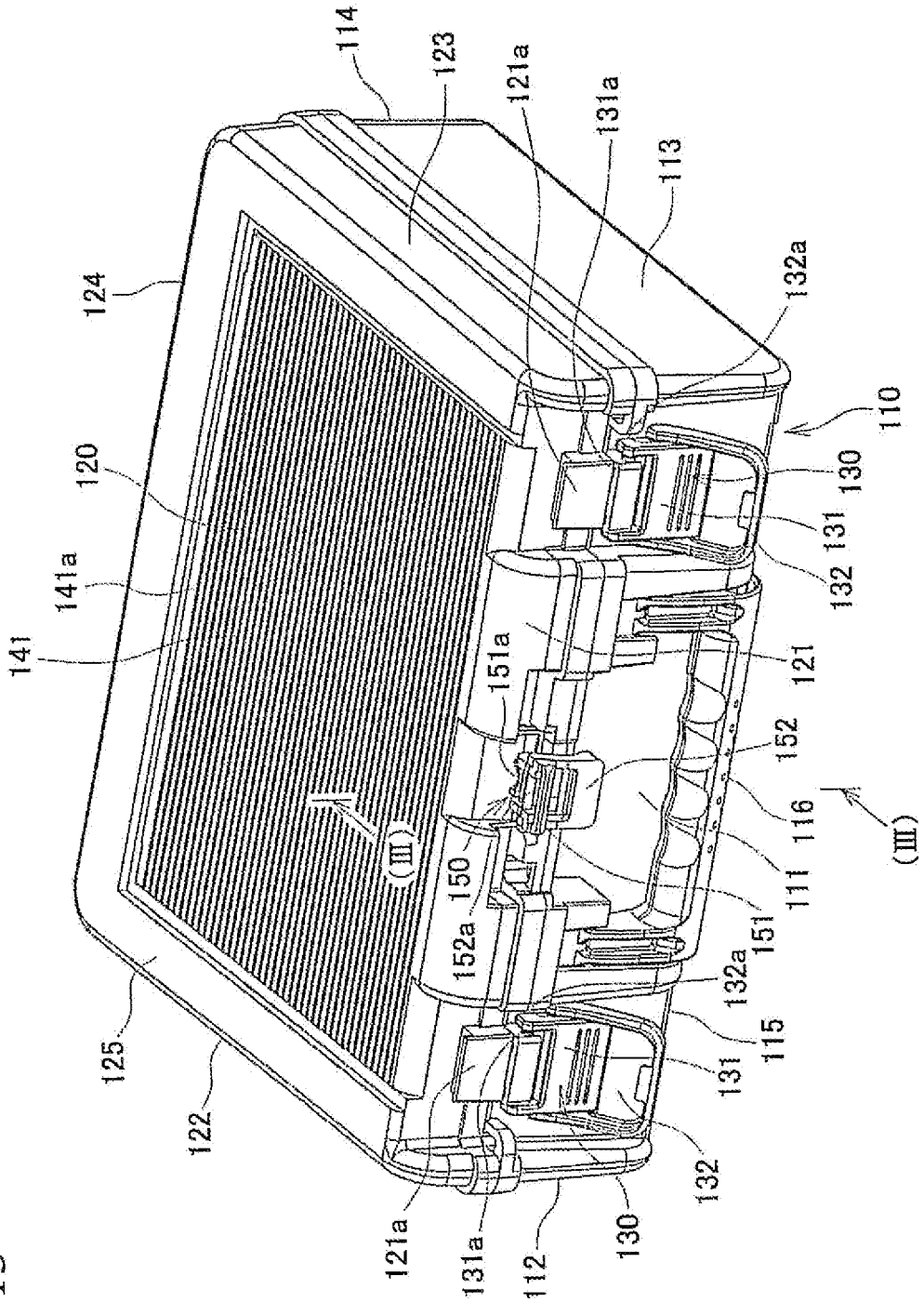
114
123
121a
131a
113
124
132a
110
120
130
131
141a
132
141
151a
121
152
116
(III)
150
111
(III)
152a
151
132a
115
125
131
122
132
121a
131a
112
130

FIG.13

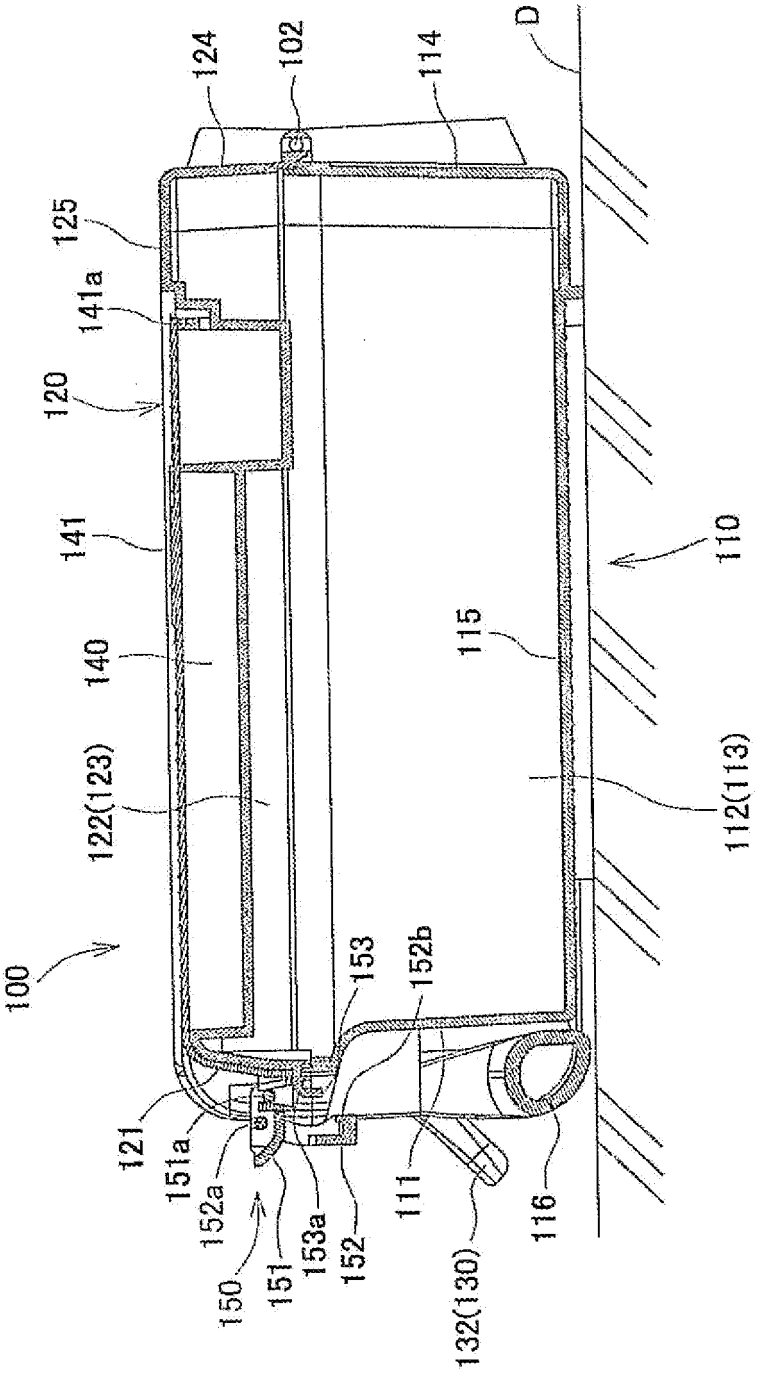
100
121
151a
152a
150
151
153a
152
153
152b
111
132(130)
116
122(123)
140
141
120
141a
125
124
102
114
D
115
112(113)
110

FIG.14

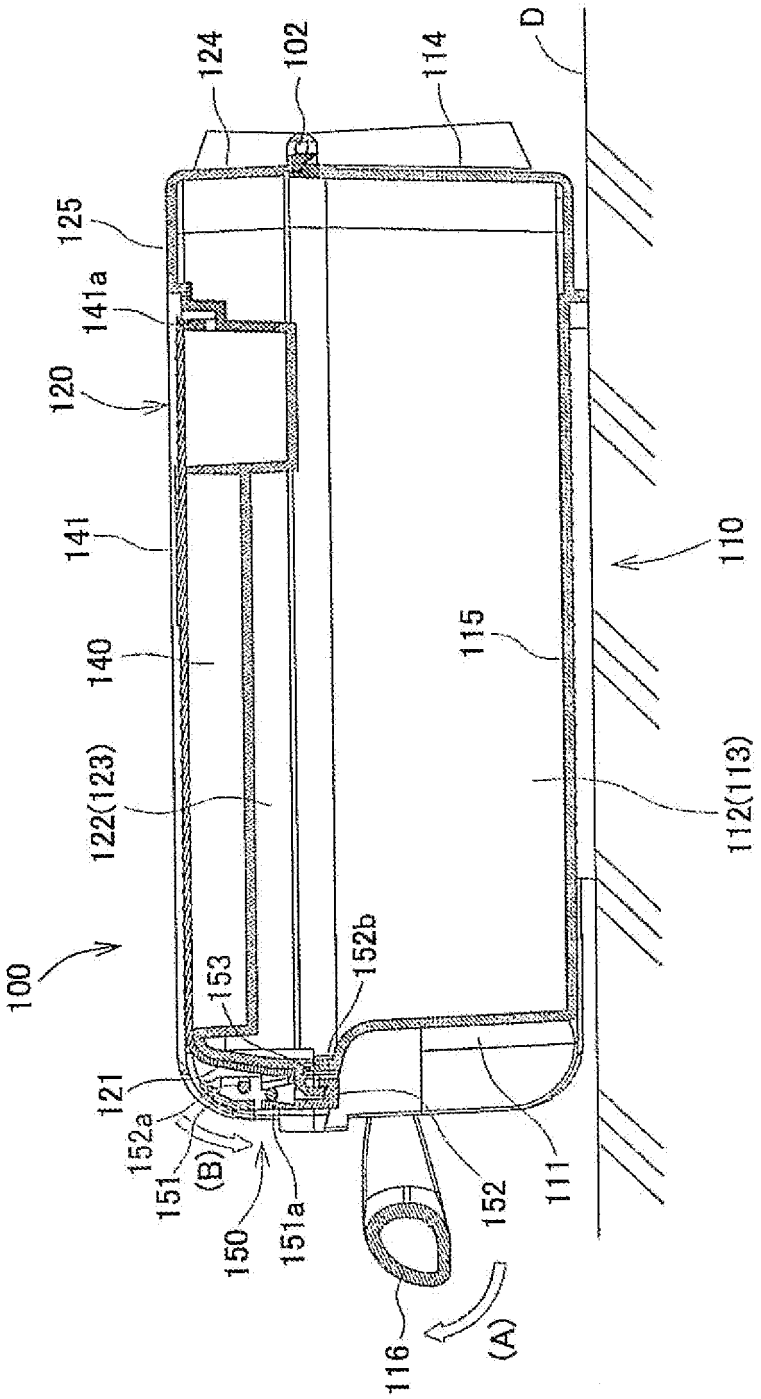
124
102
114
D
125
141a
120
141
140
122(123)
100
153
152b
121
152a
151
(B)
150
151a
152
111
116
(A)
115
110
112(113)

FIG.15

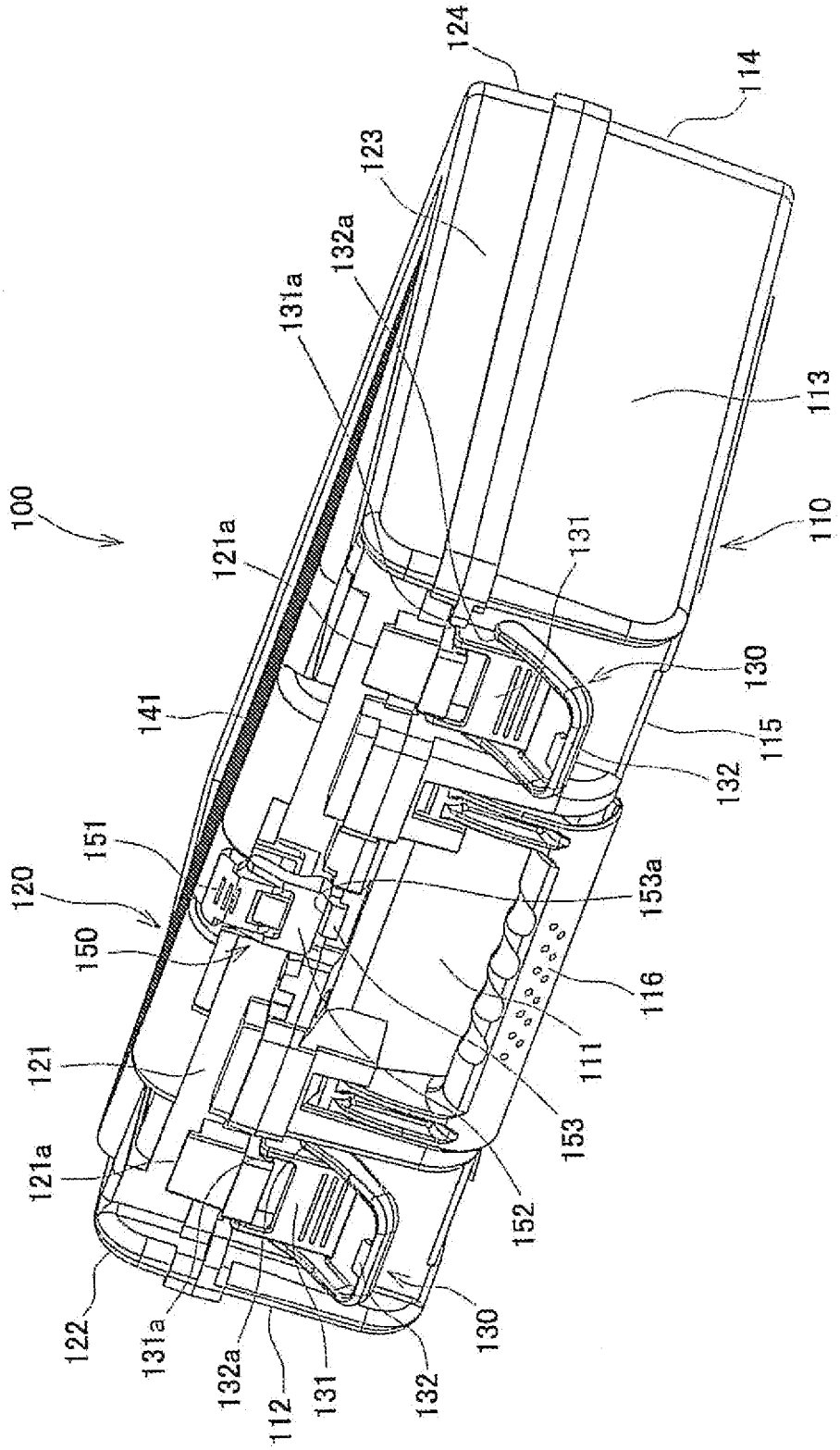
100
120
121
121a
122
131a
132a
112
131
132
130
152
153
111
116
153a
150
151
141
121a
131a
132a
123
124
114
113
110
115
132
130
131

FIG.16

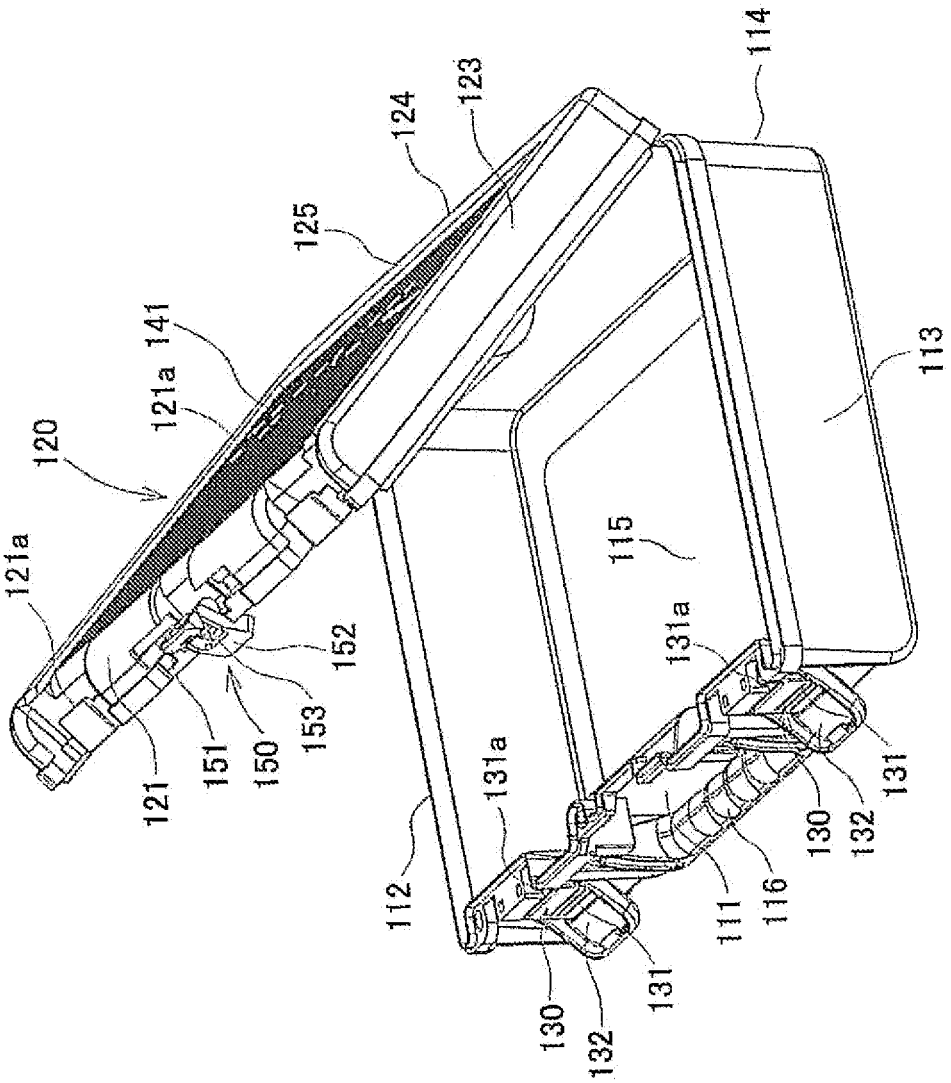
114
123
124
125
141
121a
120
121a
113
115
131a
152
153
150
151
121
131a
112
130
132
131
111
116
130
132
131

FIG.17

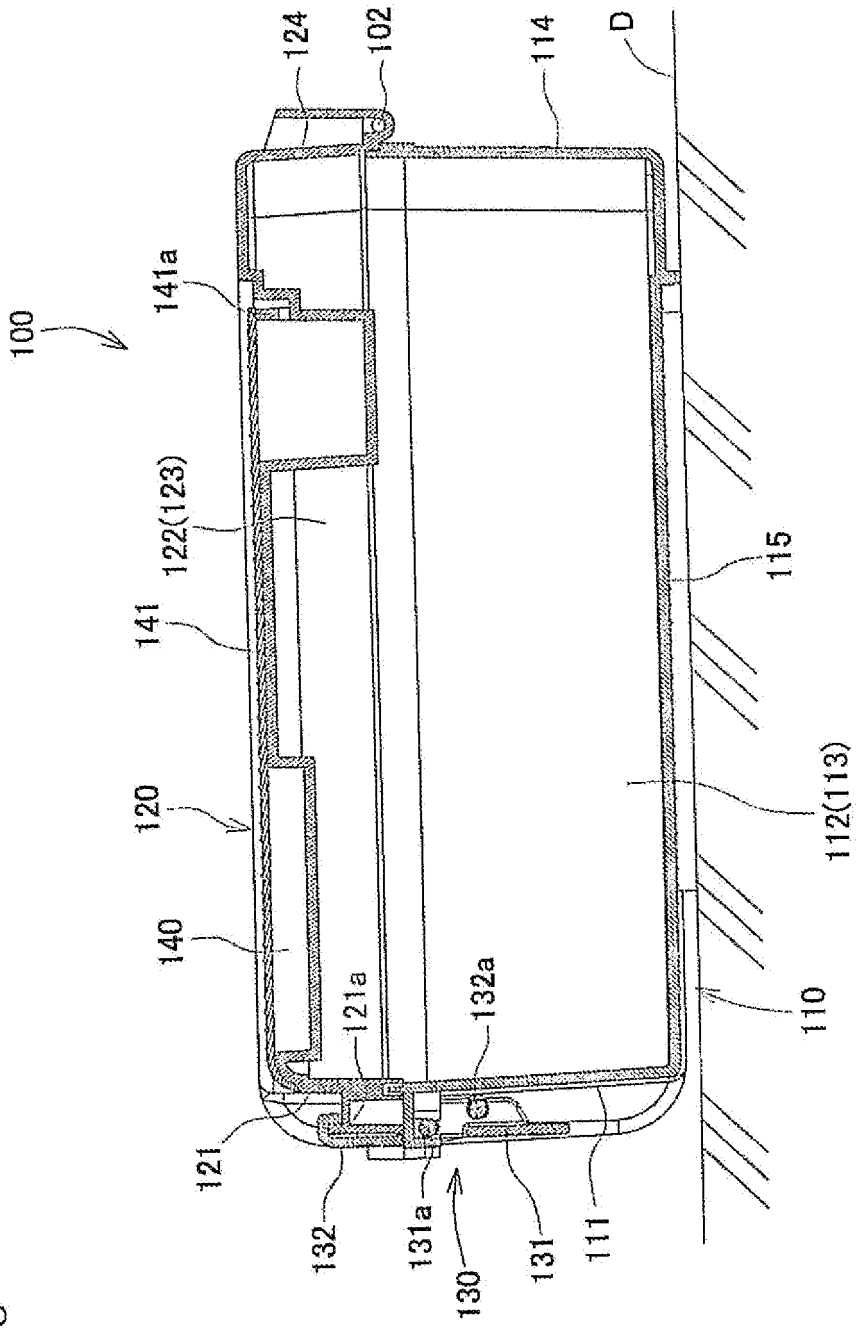
100
124
102
114
D
141a
122(123)
141
120
140
121a
132a
121
132
131a
130
131
111
110
112(113)
115

FIG.18

REFERENCES CITED IN THE DESCRIPTION

This list of references cited by the applicant is for the reader's convenience only. It does not form part of the European patent document. Even though great care has been taken in compiling the references, errors or omissions cannot be excluded and the EPO disclaims all liability in this regard.

Patent documents cited in the description

- US 5915553 A **[0002]**
- US 20040134818 A1 **[0002]**
- JP 2010064227 A **[0003]**

Klein Tools Ex. 1014, Page 35 of 35