(19) Europäisches Patentamt
European Patent Office
Office européen des brevets

(11) EP 2 537 641 B1

(12) **EUROPEAN PATENT SPECIFICATION**

(45) Date of publication and mention of the grant of the patent:
14.09.2016 Bulletin 2016/37

(51) Int Cl.:
B25H 3/02 *(2006.01)*

(21) Application number: **12171947.0**

(22) Date of filing: **14.06.2012**

(54) **Modular rolling container assembly**

Modulare Rollcontaineranordnung

Ensemble de conteneur roulant modulaire

(84) Designated Contracting States:
AL AT BE BG CH CY CZ DE DK EE ES FI FR GB GR HR HU IE IS IT LI LT LU LV MC MK MT NL NO PL PT RO RS SE SI SK SM TR

(30) Priority: **22.06.2011 US 201113166377**

(43) Date of publication of application:
26.12.2012 Bulletin 2012/52

(60) Divisional application:
16182054.3

(73) Proprietor: **The Stanley Works Israel Ltd.**
48091 Rosh Ha'Ayin (IL)

(72) Inventors:
- **Shitrit, Elad Hay**
  Tel Aviv (IL)
- **Lifshitz, Omri**
  62288 Tel Aviv (IL)

(74) Representative: **Barrett, Jennifer Catherine et al**
Stanley Black & Decker
210 Bath Road
Slough, Berkshire SL1 3YD (GB)

(56) References cited:
EP-A1- 1 424 170 **EP-A2- 1 724 069**
GB-A- 2 360 277 **US-A1- 2002 030 425**

Note: Within nine months of the publication of the mention of the grant of the European patent in the European Patent Bulletin, any person may give notice to the European Patent Office of opposition to that patent, in accordance with the Implementing Regulations. Notice of opposition shall not be deemed to have been filed until the opposition fee has been paid. (Art. 99(1) European Patent Convention).

EP 2 537 641 B1

Description

[0001] The present invention relates to a rolling container assembly.

[0002] Rolling container assemblies are commonly used to carry a plurality of working tools to and from a working location. Publication US2002/030425 discloses a rolling container assembly having an additional cabinet being removably connectable on top of a base cabinet. There is a need in the art for an improved rolling container assembly with enhanced modularity attributes.

[0003] According to an aspect of the present invention, there is provided a container module according to claim 1.

[0004] The latch may be disposed on the container top and constructed and arranged to be releasably connected to a latch engaging structure defined on the storage container positioned above the container top.

[0005] The lower non-releasable portion of the storage container may have the same configuration as the lower non-releasable portion of the container top.

[0006] The latch member may be pivotally connected to the container top and may be pivotable upwards to releasably connect to a latch engaging structure defined on the storage container positioned above the container top.

[0007] The upper non-releasable connection portion may be non-releasably connected to the lower non-releasable connection portion of the first type via a snap-fit connection.

[0008] The lower non-releasable connection portion may comprise openings constructed and arranged to receive protrusions of the upper non-releasable P-EP-SW0392034 connection portion when the lower non-releasable connection portion is non-releasably connected to the upper non-releasable connection portion.

[0009] The storage container may comprise a sliding drawer.

[0010] The storage container may comprise a pivotable bin.

[0011] According to another aspect of the present invention, there is provided an apparatus for transporting articles between working locations, comprising a container module as defined above.

[0012] The apparatus may comprise:

one or more rotatable ground engaging wheels mounted toward the bottom of the apparatus for rotation about an axis to provide rolling support for the apparatus; and

a manually engageable pulling handle, the pulling handle and the one or more ground engaging wheels being arranged to enable a user to manually pull the pulling handle generally rearwardly so as to tilt the apparatus rearwardly to a tilted rolling movement position, thereby enabling the user to roll the apparatus to a desired location by pushing or pulling the pulling handle in a desired direction.

[0013] The pulling handle may be slideable between a retracted position and an extended position, and the apparatus may further comprise a rocker lock constructed and arranged to be moveable between 1) a locked position wherein the pulling handle is locked at a selected position such that sliding movement of the pulling handle between the retracted position and the extended position is prevented and 2) an unlocked position wherein sliding movement of pulling handle between the retracted position and the extended position is permitted, wherein the rocker lock has a first portion and a second portion, the rocker lock having a pivot axis provided between the first portion and the second portion, and a biasing member that biases the rocker lock towards the locked position and is actuatable against the bias of the biasing member to pivot the rocker lock to the unlocked position, and wherein the second portion is constructed and arranged to lock the pulling handle when the rocker lock is in the locked position.

[0014] The first portion and the second portion may be integrally formed.

[0015] The pulling handle may comprise a handle portion constructed and arranged to be engageable by a user and an extension bar connected to the handle portion.

[0016] The extension bar may comprise a plurality of openings and the second portion of the rocker lock may comprise a protrusion constructed and arranged to be received in one of the plurality of openings of the extension bar when the rocker lock is in the locked position.

[0017] The extension bar may be telescopically received in a receiving portion of the apparatus.

[0018] The rocker lock may be pivotable between the locked and unlocked positions.

[0019] According to a further aspect of the present invention, there is provided an apparatus for transporting articles between working locations, comprising:

one or more rotatable ground engaging wheels mounted toward the bottom of the apparatus for rotation about an axis to provide rolling support for the apparatus;

at least two storage containers constructed and arranged to be selectively releasably or non-releasably connected to one another, each storage container comprising an upper non-releasable connection portion and a lower non-releasable connection portion, wherein the upper non-releasable connection portion of one of the storage containers is constructed and arranged to be selectively non-releasably connected to the lower non-releasable connection portion of the other of the storage containers, and the lower non-releasable connection portion of the one of the storage containers is constructed and arranged to be selectively non-releasably connected to the upper non-releasable connection portion of the other of the storage containers;

a container top having a non-releasable connection

Klein Tools Ex. 1026, Page 2 of 37

portion constructed and arranged to be selectively non-releasably connected to the upper non-releasable connection portion of either of the storage containers, and wherein the connection between the non-releasable connection portion of the container top and the upper non-releasable connection portion of one of the storage containers 1) prevents the one of the storage containers that is non-releasably connected to the container top from being non-releasably connected to the other of the storage containers disposed above the container top and 2) permits the one of the storage containers that is non-releasably connected to the container top to be releasably connected to the other of the storage containers disposed above the container top;

a releasable latch that releasably latches the one of the storage containers that is non-releasably connected to the container top to be releasably connected to the other of the storage containers disposed above the container top; and

a manually engageable pulling handle, the pulling handle and the one or more ground engaging wheels being arranged to enable a user to manually pull the pulling handle generally rearwardly so as to tilt the apparatus rearwardly to a tilted rolling movement position, thereby enabling the user to roll the apparatus to a desired location by pushing or pulling the pulling handle in a desired direction.

[0020] The releasable connection may be provided by a latch connected to the container top.

[0021] The latch may comprise a latch member constructed and arranged to be releasably connected to a latch engaging structure defined on the other of the storage containers disposed above the container top.

[0022] The upper non-releasable connection portion may be non-releasably connected to the lower non-releasable connection portion via snap-fit connection.

[0023] The lower non-releasable connection portion may comprise openings constructed and arranged to receive protrusions of the upper non-releasable connection portion when the lower non-releasable connection portion is non-releasably connected to the upper non-releasable connection portion.

[0024] At least one of the at least two storage containers may comprise sliding drawers.

[0025] The apparatus may further comprise a base storage container and a base container top, the base storage container being non-releasably connected to the base container top, and the base container top being releasably connected to one of the at least two storage containers disposed above the base container top.

[0026] The apparatus may further comprise a base storage container having the upper non-releasable connection portion, the base storage container being constructed and arranged to be selectively releasably connected or non-releasably connected to one of the at least two storage containers.

[0027] The apparatus may further comprise a base container top, the base container top being selectively non-releasably connected to the base storage container so as to prevent the base storage container to be non-releasably connected to one of the at least two storage containers and permit the base storage container to be releasably connected to one of the at least two storage containers.

[0028] The base storage container may comprise a pivotable bin.

[0029] The apparatus may further comprise a top storage container having the lower non-releasable connection portions constructed and arranged to be selectively non-releasably connected to the upper non-releasable connection portions of one of the at least two storage containers.

[0030] The top storage container may comprise a pivotable lid and a container portion.

[0031] According to a further aspect of the present invention, there is provided a container comprising:

a container portion;

a storage portion constructed and arranged to be received in the container portion, the storage portion being moveable between an open position wherein access to contents of the storage portion is permitted and a closed position wherein access to the contents of the storage portion is prevented, the storage portion comprising:

a front wall, a rear wall, and side walls, the front wall including a latch shield engageable by the user to push the storage portion from the open position to the closed position; and

a latch member at least partially shielded by the latch shield and constructed and arranged to latch the storage portion in the closed position, the latch member comprising:

an engaging portion constructed and arranged to engage with a latch engaging member, the engaging portion being biased upwards in a first position wherein the engaging portion is engageable with the latch engaging member to latch the storage portion in the closed position, wherein movement of the storage portion from the open position to the closed position effects engagement of the engaging portion with the latch engaging member;

an actuating portion actuatable by the user to move the engaging portion downward to a second position wherein the latch member is released from engagement with the latch engaging member to permit sliding movement of the storage portion.

[0032] The container may further comprise a container

Klein Tools Ex. 1026, Page 3 of 37

top constructed and arranged to be connected to the container portion, and wherein the latch engaging member is provided on the container top.

[0033] The latch engaging member may be provided on another container disposed above and connected to the container.

[0034] The container may further comprise a biasing member disposed below the engaging portion, and wherein the engaging portion is biased upwards by the biasing member.

[0035] The actuatable portion may be actuatable by the user to pivot the latch member downwards against the bias of the biasing member so as release the engaging portion from engagement with the latch engaging member.

[0036] The biasing member may be a compression spring.

[0037] The actuating portion and the engaging portion of the latch member may be integrally formed.

[0038] The storage portion may be a drawer, and the latch member may be pivotally connected to the drawer behind the latch shield.

[0039] According to a further aspect of the present invention, there is provided an apparatus for transporting articles between working locations, comprising:

at least one container having an interior space in which articles to be transported can be stored;
one or more rotatable ground engaging wheels mounted toward the bottom of the apparatus for rotation about an axis to provide rolling support for the apparatus;
an adjustable pulling handle slideable between a retracted position and an extended position, the pulling handle and the one or more ground engaging wheels being arranged to enable a user to manually pull the pulling handle generally rearwardly so as to tilt the apparatus rearwardly to a tilted rolling movement position, thereby enabling the user to roll the apparatus to a desired location by pushing or pulling the pulling handle in a desired direction,
a rocker lock constructed and arranged to be moveable between 1) a locked position wherein the pulling handle is locked at a selected position such that sliding movement of the pulling handle between the retracted position and the extended position is prevented and 2) an unlocked position wherein sliding movement of pulling handle between the retracted position and the extended position is permitted,
wherein the rocker lock has a first portion and a second portion, the rocker lock having a pivot axis provided between the first portion and the second portion, and a biasing member that biases the rocker lock towards the locked position and is actuatable against the bias of the biasing member to pivot the rocker lock to the unlocked position, and wherein the second portion is constructed and arranged to lock the pulling handle when the rocker lock is in the locked position.

[0040] The first portion and the second portion may be integrally formed.

[0041] The pulling handle may comprise a handle portion constructed and arranged to be engageable by a user and an extension bar connected to the handle portion.

[0042] The extension bar may comprise a plurality of openings and the second portion of the rocker lock may comprise a protrusion constructed and arranged to be received in one of the plurality of openings of the extension bar when the rocker lock is in the locked position.

[0043] The extension bar may be telescopically received in a receiving portion of the apparatus.

[0044] The rocker lock may be pivotable between the locked and unlocked positions.

[0045] According to a further aspect of the present invention, there is provided a container module comprising:

a container top having a non-releasable connection portion of a first type;
a storage container having an upper portion with a non-releasable connection portion of a second type, which is non-releasably connectable with the non-releasable connection portion of the first type so that the upper portion can be connected to the container top;
the storage container having a lower portion with a) a non-releasable connection portion of the first type to enable the lower portion to be non-releasably connected to an upper portion of at least one other storage container, and b) a releasable connection portion; and
a releasable latch enabling a releasable connection of the storage container to the at least one other storage container.

[0046] The at least one other storage container may have the same configuration as the storage container.

[0047] The at least one other storage container may have a different configuration from the storage container.

[0048] The releasable latch may be connected to the container top.

[0049] These and other aspects of the present invention, as well as the methods of operation and functions of the related elements of structure and the combination of parts and economies of manufacture, will become more apparent upon consideration of the following description and the appended claims with reference to the accompanying drawings, all of which form a part of this specification, wherein like reference numerals designate corresponding parts in the various figures. In one embodiment, the structural components illustrated herein can be considered drawn to scale. It is to be expressly understood, however, that the drawings are for the purpose of illustration and description only and are not a limitation of the invention. In addition, it should be appre-

ciated that structural features shown or described in any one embodiment herein can be used in other embodiments as well. As used in the specification and in the claims, the singular form of "a", "an", and "the" include plural referents unless the context clearly dictates otherwise.

Fig. 1a is a perspective front view of a rolling container assembly in accordance with an embodiment of the present invention;
Fig. 1b is a perspective front view of a rolling container assembly in accordance with another embodiment of the present invention;
Fig. 2 is a perspective front view of a rolling container assembly in accordance with yet another embodiment of the present invention, but with container modules releasably disconnected from one another;
Fig. 3 is a rear plan view of the rolling container assembly in accordance with an embodiment;
Fig. 4 is an exploded view of a base storage container and container top of the rolling container assembly in accordance with an embodiment;
Fig. 5 is a perspective view of a container module of the rolling container assembly in accordance with an embodiment;
Fig. 6 is a perspective view of the container module of the rolling container assembly in accordance with an embodiment;
Fig. 7 is a perspective view of a part of the container module of the rolling container assembly in accordance with an embodiment;
Fig. 8a is a detailed view of upper and lower non-releasable connection portions of storage containers of the rolling container assembly in accordance with an embodiment;
Fig. 8b is a detailed view of a non-releasable connection between storage containers of the rolling container assembly in accordance with an embodiment;
Fig. 9a is a detailed view of a non-releasable connection portion of a container top and upper non-releasable connection portion of a storage container of the rolling container assembly in accordance with an embodiment;
Fig. 9b is another detailed view of a non-releasable connection portion of a container top and upper non-releasable connection portion of a storage container of the rolling container assembly in accordance with an embodiment;
Fig. 9c is a detailed view of a non-releasable connection between a container top and a storage portion of the rolling container assembly in accordance with an embodiment;
Fig. 10 is a detailed cross sectional side view of a non-releasable connection between storage containers of the rolling container assembly in accordance with an embodiment;
Fig. 11a is a perspective view from the bottom of a portion of a container module of the rolling container assembly in accordance with an embodiment;
Fig. 11b is a perspective view from the top of a portion of a container module of the rolling container assembly in accordance with an embodiment;
Fig. 12 is a perspective view from the bottom of a portion of a container module of the rolling container assembly in accordance with an embodiment;
Fig. 13a-13b are detailed side views of a drawer latch of the rolling container assembly in an engaged position and a, disengaged position, respectively, in accordance with an embodiment;
Fig. 14a-14c illustrate positions of the latch during movement of the drawer between an open and closed position in accordance with an embodiment;
Fig. 15a-15c illustrate positions of the latch during movement of the drawer between the closed and open positions in accordance with an embodiment;
Fig. 16a-16b illustrate rear plan views of the rolling container assembly in accordance with an embodiment;
Fig. 17 illustrates a detailed view of a handle latch of the rolling container assembly in accordance with an embodiment;
Fig. 18 illustrates a detailed side view of the handle latch in accordance with an embodiment; and
Fig. 19a-19b illustrates a detailed side view of the handle latch in the locked position/unactuated position and in the unlocked/actuated position, respectively, in accordance with an embodiment.

[0050] Fig. 1 a shows an apparatus 10 for transporting articles between working locations. The apparatus 10 has one or more rotatable ground engaging wheels 12 mounted toward the bottom of the apparatus 10 for rotation about an axis to provide rolling support for the apparatus 10. The apparatus 10 also has at least two storage containers 14a, 14b, 14c, 14d (four are shown in this embodiment of Fig. 1a) constructed and arranged to be selectively releasably or non-releasably connected to one another. Each storage container 14a-14d includes an upper non-releasable connection portion 16 (see Fig. 8a) and a lower non-releasable connection portion 18 (see Fig. 8a). The upper non-releasable connection portion 16 of one of the storage containers 14a-14d is constructed and arranged to be selectively non-releasably connected to the lower non-releasable connection portion 18 of the other of the storage containers 14a-14d. In addition, the lower non-releasable connection portion 18 of the one of the storage containers 14a-14d is constructed and arranged to be selectively non-releasably connected to the upper non-releasable connection portion 16 of the other of the storage containers 14a-14d. Referring back to Fig. 1a, the apparatus 10 may also include a top storage container 15 that is selectively releasably or non-releasably connected to one of the storage containers 14a-14d. In one embodiment, the top storage container 15 includes a non-releasable connection portion

Klein Tools Ex. 1026, Page 5 of 37

(not shown) constructed and arranged in a similar manner as the lower non-releasable connection portion 18 of the storage containers 14a-14d, wherein the non-releasable connection portion of the top storage container 15 may be selectively non-releasably connected to an upper non-releasable connection portion 16 of one of the storage containers 14a-14d. For example, in the illustrated embodiment of Fig. 1a, the top storage container 15 is non-releasably connected to the storage container 14a. The releasable connections may be provided by pairs of latches 28a, 28b (the other latches 28a, 28b of each pair of latches 28a, 28b are obstructed from view in this Figure).

[0051] In the embodiment of Fig. 1b, the apparatus 10 also includes a container top 20a, 20b (two are shown in this embodiment). It should be appreciated that the number and location of the container tops 20a, 20b may vary in other embodiments. The container tops 20a, 20b has a non-releasable connection portion 22 (see Fig. 9b) constructed and arranged to be selectively non-releasably connected to the upper non-releasable connection portion 16 of one of the storage containers 14a-14d. The connection between the non-releasable connection portion 22 of the container tops 20a, 20b and the upper non-releasable connection portion 16 of one of the storage containers 14a-14c 1) prevents the one of the storage containers 14a-14d that is non-releasably connected to the container top 20a, 20b from being non-releasably connected to the other of the storage containers 14a-14d disposed above the container top 20a, 20b and 2) permits the one of the storage containers 14a-14d that is non-releasably connected to the container top 20a, 20b to be releasably connected to the other of the storage containers 14a-14d disposed above the container top 20a, 20b. In the illustrated embodiment of Fig. 1a, the container top 20a is releasably connected to the storage container 14b such that the container top 20a 1) prevents the storage container 14b from being non-releasably connected to the storage container 14a and 2) permits the storage container 14b to be releasably connected to the storage container 14a disposed above the container top 20a.

[0052] The non-releasable connection portions 22 of the container tops 20a, 20b and the lower non-releasable connection portion 18 of the storage containers 14a-14d may be a first type of non-releasable connection portion different from a second type of connection portion defined by the upper non-releasable connection portion 16 of the storage containers 14a-14d. Just for example, in one embodiment, the first type of connection portion may be a female type connector, and the second type of connection portion may be male type connector configured to be connected to the female type connector. However, it should be appreciated that in other embodiments, the female and male types connectors may be interchanged. That is, the non-releasable connection portions 22 of the container tops 20a, 20b and the lower non-releasable connection portions 18 of the storage containers 14a-14d may be male type connectors, and the upper non-releasable connection portion 16 of the storage containers 14a-14d may be female type connectors.

[0053] In one embodiment, the apparatus 10 also includes a base storage container 26 that is selectively releasably or non-releasably connected to one of the storage containers 14a-14d. In one embodiment, the base storage container 26 includes a non-releasable connection portion (not shown) constructed and arranged in a similar manner as the upper non-releasable connection portion 16 of the storage containers 14a-14d, wherein the non-releasable connection portion of the base storage container 26 may be selectively non-releasably connected to a lower non-releasable connection portion 18 of one of the storage containers 14a-14d or to a non-releasable connection portion 22 of one of the container tops 20a, 20b.

[0054] In the embodiment shown in Fig. 1Xa, the top storage container 15 is non-releasably connected to the storage container 14a to form upper container module 70. Middle container module 72 is formed by the container top 20a, the storage container 14b, the storage container 14c, and the storage container 14d that are non-releasably connected to one another. Lower container module 74 is formed by the container top 20b and the base container 26 that are non-releasably connected to each other. It should be appreciated that the container modules 70, 72, 74 may have other configurations and may be formed using various combinations of one or more of the container tops 20a, 20b, storage containers 14a-14d, base storage container 26, or top storage container 15 in other embodiments. It should also be appreciated that the apparatus 10 may have other container modules formed using additional storage containers and container tops that are non-releasably connected to one another. These container modules may then be releasably connected to one another. In one embodiment, each container module includes a container top that prevents the storage container that is non-releasably connected to the container top from being non-releasably connected to another storage container disposed above the container top.

[0055] In one embodiment, the apparatus 10 also includes a manually engageable pulling handle 24. The pulling handle 24 and the one or more ground engaging wheels 12 are arranged to enable a user to manually pull the pulling handle 24 generally rearwardly so as to tilt the apparatus 10 rearwardly to a tilted rolling movement position, thereby enabling the user to roll the apparatus 10 to a desired location by pushing or pulling the pulling handle 24 in a desired direction. In the illustrated embodiment, the pulling handle 24 includes a handle portion 25 and an extension bar 27 connected to the handle portion 25. The handle portion 25 may be provided with rubber, foam, or other anti-slip materials thereon to facilitate grasping of the handle portion 25. Alternatively or additionally, grooves or other shapes may be formed on the handle portion 25 to facilitate the grasping thereof.

[0056] In the embodiment shown in Fig. 1a, the top

Klein Tools Ex. 1026, Page 6 of 37

storage container 15 may include a lid portion 30 and a container portion 32. The lid portion 30 may include a top side or wall 33, a front side or wall 34, a left side or wall 36, a right side or wall 38, and a rear side or wall 40. The container portion 32 may include a front side or wall 42, a left side or wall 44, a right side or wall 46, a rear side or wall 48, and a bottom side or wall (not shown). Each of the storage containers 14a, 14b, 14c, 14d may include a front side or wall 50, a left side or wall 52, a right side or wall 54, a rear side or wall 56, and a bottom side or wall 59 (see Fig. 12). Referring back to Fig.1a, the base storage container 26 may include a front side or wall 58, a right side or wall 62, a left side or wall 60, a rear side or wall 64, and a bottom side or wall 66 (see Fig. 4).

[0057] Fig. 1b shows another embodiment of the apparatus 10 having top storage container 15, storage containers 14a, 14b, container tops 20a, 20b, and base storage container 26. In this embodiment, the top storage container 15 is non-releasably connected to storage container 14a to form the upper container module 70. The middle container module 72 is formed from the container top 20a and the storage container 14b that are non-releasably connected to each other. The lower container module 74 is formed from the container top 20b and the base storage container 26 that are non-releasably connected to each other. In this embodiment, latches 28a, 28b are used to releasably connect the upper container module 70 to the middle container module 72 and the middle container module 72 to the lower container module 74, respectively. That is, the latches 28a releasably connects the storage container 14a of the upper container module 70 to the storage container 14b of the middle container module 72, and the latches 28b releasably connects the storage container 14b of the middle container module 72 to the base storage container 26 of the lower container module 74.

[0058] It should be appreciated that the number, combination, and/or arrangement of storage containers, top container, container tops, and base container may vary. It should also be appreciated that the number of latches and the location of the latches may also vary. The storage containers may have the same configuration as one another or may have different configurations from one another. For example, there can be one or more storage containers of equal size or there can be one or more storage containers that are different in size compared to one or more other storage containers. In one embodiment, there can be a plurality of storage containers that can be non-releasably connected to each other in any order or configuration. As used herein, "non-releasable" does not necessarily mean that it is impossible to release the connection between parts or disconnect the parts that are non-releasably connected. Instead, the term "non-releasable" may refer to the inability of a user to disconnect a connection manually, without the use of a tool or implement. In addition, the parts that are non-releasably connected may be connected during manufacture, such as at the factory, or at any point before being sold to consumers or users. This may enable manufacturers or others to easily assemble the various embodiments of the apparatus 10 before the apparatus 10 is sold to consumers or users. In other words, the manufacturer or others assembling the various embodiments of the apparatus 10 may select the storage containers 14a-14d, base container 26, top storage container 15, and container tops 20-20b to be non-releasably connected to one another. The manufacturers or other assembling the apparatus 10 may also select the storage containers 14a-14d to be releasably connected to one another. Thus, the manufactures or others assembling the apparatus 10 may select the combination of storage containers 14a-14d, base container 26, top storage container 15, and container tops 20a-20b to be non-releasably or releasably connected to one other. However, in another embodiment, the parts may be non-releasably connected by consumer after being sold to the consumer. In contrast, parts that are "releasably" connected as contemplated herein are easier to disconnect from one another or release their connection from one another. That is, parts that are "releasably" connected may be released manually by the consumers or users without the use of a tool or implement.

[0059] Fig. 2 shows an embodiment of the apparatus 10 with the container modules 70, 72, 74 that are released from their releasable connections with one another. In the illustrated embodiment, the container top 20a prevents the storage container 14b from being non-releasably connected to storage container 14a. Similarly, container top 20b prevents the base storage container 26 from being non-releasably connected to storage container 14b. In this embodiment, each of the storage containers 14a, 14b, 14c includes a container portion 77a, 77b, 77c, respectively. The container portions 77a, 77b, 77c are constructed and arranged to receive sliding drawer 78a, 78b, 78c, respectively, therein. The drawers 78a, 78b, 78c may have similar or different configurations from one another. In one embodiment, the drawers 78a, 78b, 78c each have the front wall or side 50, a right wall or side 51, a left wall or side 53, a rear wall or side 55, and a bottom wall or side 57. The storage containers 14a-14c may include slide rails 80 (see Fig. 14a) constructed and arranged to enable the drawers 78a-78c to slide thereon between an open position wherein access to contents of the drawers 78a-78c are permitted and a closed position wherein access to contents of the drawers 78a-78c are prevented. In the embodiment shown in Fig. 2, the front side 50 of each of the drawers 78a, 78b, 78c includes a latch shield 81 that is engageable by the user to push the drawer 78a-78c from the open position to the closed position.

[0060] The base storage container 26 may include a container portion 84 and a bin 82 received in the container portion 84. In the embodiment shown in Fig. 2, the bin 82 is pivotable between an open position wherein access to contents of the bin 82 are permitted and a closed position wherein access to contents of the bin 82 are pre-

Klein Tools Ex. 1026, Page 7 of 37

vented. The front side 58 of the bin 82 includes a latch shield 86 that is engageable by the user to move the bin 82 from the open position to the closed position. In other embodiments, the bin 82 may be a sliding bin or other types of bins. It is also contemplated that instead of bin 82, the base storage container 26 may include a sliding drawer. The drawers 78a-78c and the bin 82 may be referred to as storage portions.

[0061] Fig. 3 shows a rear view of the apparatus 10. The apparatus 10 includes a handle receiving portion 88 having an opening (not shown) constructed and arranged to telescopically receive the extension bar 27 of the pulling handle 24 such that the height of the handle portion 25 may be adjusted. That is, the pulling handle 24 may be slid between a retracted position and an extended position to adjust the height of the handle portion 25. Thus, to lower the height of the handle portion 25, the extension bar 27 may be lowered such that an increased portion of the extension bar 27 is further received in the handle receiving portion 88. In contrast, to increase the height of the handle portion 25, the extension bar 27 may be pulled upwards such that a decreased portion of the extension bar 27 is received in the handle receiving portion 88. In the illustrated embodiment, a handle lock 90, which may take the form of a rocker, is constructed and arranged to be moveable between 1) a locked position wherein the pulling handle 24 is locked at a selected position such that sliding movement of the pulling handle 24 between the retracted position and the extended position is prevented and 2) an unlocked position wherein sliding movement of the pulling handle 24 between the retracted position and the extended position is permitted. The handle lock 90 may engage with one of a plurality of openings 92 provided in an outer surface 91 of the extension bar 27 when the pulling handle 24 is in the locked position. The handle lock 90 will be described in more detail later.

[0062] Fig. 4 is an exploded view of the lower container module 74. In the illustrated embodiment, the lower container module 74 includes the container top 20b. The container top 20b may include a pivotable handle 94 provided thereon. Each latch 28b is pivotally connected to the container top 20b and constructed and arranged to be releasably connected to a latch engaging structure 31 (see for example Fig. 5) defined on a storage container 14a-14d positioned above the container top 20b.

[0063] In one embodiment, the bin 82 includes the front wall 58, a left side or wall 96, a right side or wall 98, a rear side or wall 100, and a bottom side or wall 102. In this embodiment, a pair of protrusions 104 (only one is shown in this Figure) are formed on the bin 82 and constructed and arranged to be received in a pair of openings 106 (only one is shown in this Figure) formed in the container portion 84 to pivotally connect the bin 82 to the container portion 84. It is contemplated that in other embodiments, the bin 82 may be connected to the container portion 84 using other attachment mechanisms.

[0064] In the illustrated embodiment, the latch shield 86 is provided on the front wall 58 of the bin 82 such that the user may engage the latch shield 86 to pivot the bin 82 to the closed position. The latch shield 86 may at least partially shield a latch member 108 that is constructed and arranged to latch the bin 82 in the closed position. An engaging portion 105 of the latch member 108 is exposed through an opening 107 (see Fig. 2 for a better view) formed in the bin 82. The engaging portion 105 is constructed and arranged to engage with a latch engaging member (not shown) to latch the bin 82 in the closed position. In this embodiment, the latch engaging member is provided on the container top 20b. Alternatively or additionally, the latch engaging member may be provided on the container portion 84. The latch shield 86 may be integrally molded with the rest of the bin 82 or may be attached thereto. The latch member 108 will be described in more detail later.

[0065] As shown in Fig. 4, the container portion 84 includes the upper non-releasable connection portions 16 constructed and arranged to be connected to the non-releasable connection portion 22 of the container top 20b. It should be appreciated that in some embodiments, the upper non-releasable connection portions 16 may be selectively non-releasably connected to the lower non-releasable connection portions 18 of a storage container.

[0066] Fig. 5 shows a perspective view of a middle container module 72 in accordance with an embodiment. In this embodiment, the module 72 is formed by the storage container 14b, storage container 14c, and the container top 20a that are non-releasably connected to one another. As shown in the illustrated embodiment, the latches 28a are pivotally connected to the container top 20a by hinges 112. It should be appreciated that the latches on the other container tops may be attached to their respective container tops in a similar manner, or other connection mechanisms may be used. The latches 28a each includes an upper engaging member 114 constructed and arranged to engage with the latch engaging structure 31 of another storage container or the top container 15 so as to non-releasably connect the storage containers and the container tops. Thus, in one embodiment, the upper engaging member 114 of the latches 28a connected to the container top 20a may be used to engage with the latch engaging structure 31 of the storage container 14a to releasably connect the storage container 14a to the container top 20a and to the storage containers 14b, 14c. In one embodiment, the upper engaging member 114 may be curved inwardly or at an angle relative to the rest of the latch 28a such that the upper engaging member 114 may be received in the latch engaging structure 31 during the releasable connection. Latches 28b may have a similar configuration as latches 28a. However, it is contemplated that the latches 28a, 28b and the latch engaging structures may have other configurations and/or locations in other embodiments.

[0067] Optional side handles 110 may be attached to the sides 52, 54 (the side handle 110 attached to the side 54 is obstructed from view) of the storage container 14c

to facilitate transport or placement of the container module 72. It is contemplated that the side handles 110 may have other configurations, may be placed at other locations, or may be integrally formed with storage containers.

[0068] In the illustrated embodiment, the container top 20a is formed with elongated protrusions 116 (two are shown in this embodiment). The elongated protrusions 116 may be constructed and arranged to be received in elongated recesses 118 (see Fig. 11a) formed in the bottom side of the storage containers 14a-14d to facilitate alignment of the latches 28a with the latch engaging structures 31. That is, when another container module is placed on top of container module 72 such that the protrusions 116 of the container module 72 are received in the recesses of the other container module, the latches 28a of the container top 20a may be aligned with the latch engaging structures 31 of the other container module so as to enable the upper engaging members of the latches 28a to be received in the latch engaging structure 31 to form the releasable connection between the container modules. The other container tops may have the same configuration as container top 20a and may include the same features.

[0069] Fig. 6 is a perspective view of the middle container module 72 with the drawer 78b in the open position. The latch shield 81 may at least partially shield a latch member 120 that is constructed and arranged to latch the bin 82 in the closed position. An engaging portion 119 of the latch 120 is exposed through an opening 117 formed in the drawer 78b. The engaging portion 119 is constructed and arranged to engage with a latch engaging member 121 (see Fig. 13a) to latch the drawer 78b in the closed position. The latch member 120 may have the same configuration as the latch member 108 of the bin 82 of the base storage container 26, or may have a different configuration. The other storage containers may also be provided with the latch member 120. In one embodiment, the latch member 120 is biased upwards in a first position (see Fig. 13a) wherein the engaging portion 119 is engageable with the latch engaging member 121 to latch the drawer 78b in the closed position to prevent sliding movement of the drawer 78b. The latch member 120 may be moveable to a second position (see Fig. 13b) wherein the latch member 120 is releasable from engagement with the latch engaging member 121 to permit sliding movement of the drawer 78b. The latch engaging member 121 may be provided on the container top 20a. Alternatively or additionally, the latch engaging member 121 may be provided on a storage container disposed above and connected to the storage container 14b. It should be appreciated that the other drawers may be provided with latches having similar configuration as the latch member 120. Details of the latch member 120 and the operation thereof will be described in more detail later.

[0070] Fig. 7 shows the storage container 14b with certain parts removed to better reveal others. In this embodiment, the container portion 77b of the storage container 14b includes four upper non-releasable connection portions 16 extending upwards from a ledge portion 131 of the container portion 77b. In one embodiment, the ledge 131 may be the same height as the side walls 52, 54 of the container portion 77b. The other storage containers may have the same configuration, or may have different configurations, as the storage container 14b shown in this Figure.

[0071] Fig. 8a is a detailed view of the upper and lower non-releasable connection portions 16, 18 of the storage containers 14b, 14c. In this embodiment, each of the upper non-releasable connection portions 16 of the storage containers 14b, 14c includes protrusions 126 (two in this embodiment) constructed and arranged to be received in openings 128 (two in this embodiment) when the storage containers 14b, 14c are non-releasably connected to each other. The lower non-releasable connection portion 18 of the storage container 14b may include a hollow space 141 (see Fig. 12) formed in the storage container 14b to receive the upper non-releasable connection portion 16 of the storage container 14c. It is contemplated that the upper and lower non-releasable portions 16, 18 may be interchanged in other embodiments, or may have different configurations in other embodiments. It is contemplated that the upper and lower non-releasable connection portions 16, 18 of the other storage containers may have the same configuration, or may have different configurations, as the upper and lower non-releasable connection portions 16, 18 shown in this Figure.

[0072] Fig. 8b shows in detail the non-releasable connection between the storage containers 14b, 14c, with the parts normally obstructed from view shown in dashed lines, and with certain parts removed to better reveal others. In this embodiment, the storage containers 14b, 14c are non-releasably connected using the upper non-releasable connection portion 16 of the storage container 14c and the lower non-releasable connection portion 18 of the storage container 14b In this embodiment, the protrusions 126 of the upper non-releasable connection portions 16 of the storage container 14c are received in the openings 128 of the lower non-releasable connection portions 18 of the storage container 14b to form the non-releasable connection. Fig. 10 shows the connection in more detail. As shown in Fig. 10, the protrusion 126 of the upper non-releasable connection portion 16 includes a stop surface 130 and an inclined contact portion 132. The lower non-releasable connection portion 18 includes an upper surface 134 and a lower surface 136 defining the opening 128. The lower surface 136 of the lower non-releasable connection portion 18 may be constructed and arranged to abut against the stop surface 130 of the protrusion 126 of the upper non-releasable connection portion 16 to prevent the lower non-releasable connection portion 18 from being disconnected from the upper non-releasable connection portion 16. The lower non-releasable connection portion 18 may also include a bottom surface 138 constructed and arranged to contact the contact surface 132 when the upper non-releasable connec-

Klein Tools Ex. 1026, Page 9 of 37

tion portion 16 is being connected to the lower non-releasable connection portion 18, which will be described in more detail later. The bottom surface 138 may contact a ledge surface 140 of the upper non-releasable connection portion 16 when the lower and upper non-releasable portions 16, 18 are non-releasably connected to each other. Any portion or all of the upper and lower non-releasable connection portions 16, 18 may be made of resilient material. In one embodiment, the upper and lower non-releasable connection portions 16, 18 are made entirely of plastic. It should be appreciated that the upper and lower non-releasable connection portions 16, 18 may be made of other materials or a combination of materials. It is contemplated that the upper and lower non-releasable connection portions 16, 18 may have other configurations in other embodiments.

[0073] Figs. 9a-9b show in detail the non-releasable connection portion 22 of the container top 20a and the upper non-releasable connection portion 16 of the storage container 14b. The non-releasable connection portion 22 may have a similar configuration as the lower non-releasable connection portions 18 of the storage containers. For example, as shown in Fig. 9b, the non-releasable connection portion may include a hollow space 143 constructed and arranged to receive at least portions of the upper non-releasable connection portion 16. Furthermore, the non-releasable connection portion 22 of the container top 20a may have openings 144 constructed and arranged to receive the protrusions 126 of the upper non-releasable connection portions 16. An upper surface 145 and a lower surface 146 of the non-releasable connection portion 22 define the opening 144. The non-releasable connection portion 22 may include a bottom surface 148 constructed and arranged to contact the inclined contact surface 132 of the upper non-releasable connection portions 16 when the upper non-releasable connection portions 16 are being non-releasably connected to the lower non-releasable connection portions 18, which will be described in more detail below. Thus, in one embodiment, the non-releasable connection portions 22 may have similar configurations and parts as the lower non-releasable connection portion 18 and may operate with the upper non-releasable connection 16 in a similar manner. That is, the connection between the non-releasable connection portion 22 and the upper non-releasable connection portion 16 may be similar to the connection shown in Fig. 10 between the lower and upper non-releasable connections 16, 18. Accordingly, this feature enables the manufacturer or others assembling the apparatus 10 to select the combination of storage containers and container tops to be non-releasably connected together to form container modules, as mentioned above.

[0074] Fig. 9c shows in detail the non-releasable connection between the container top 20a and the storage container 14b, with the parts normally obstructed from view shown in dashed lines, and with certain parts removed to better reveal others. In this embodiment, the container top 20a is non-releasably connected to the storage container 14b using the upper non-releasable connection portion 16 of the storage container 14b and the non-releasable connection portion 22 of the container top 20a. In this embodiment, the protrusions 126 of the upper non-releasable connection portions 16 of the storage container 14b are received in the openings 144 of the non-releasable connection portions 22 of the container top 20a to form the non-releasable connection.

[0075] Fig. 11 a is a bottom perspective view of the middle container module 72 in accordance with an embodiment. In this embodiment, the storage container 14c includes the elongated recess 118 at the bottom side 59 thereof. The elongated recess 118 is constructed and arranged to receive the elongated protrusion 116 provided on the container top 20a (see Fig. 11 b). As mentioned above, the elongated recesses 118 and the protrusions 116 facilitate the alignment of the latches 28a, 28b with the latch engaging structures 31. Feet 142 may extend from the bottom side 59 of the storage container 14c to facilitate placement of the storage container 14c on a surface. The other storage containers may also be provided with the feet 142 and the recesses 118. As shown in Fig. 11b, openings 150 may be provided on the container top 20a near or at the non-releasable connection portions 22. The openings 150 of the container top 20a may receive the feet 142 of the storage container placed above the container top 20a. The other container tops may have the same configuration as the container top 20a.

[0076] The storage containers, container tops, base storage container, and top storage container may be non-releasably connected as follows in accordance with an embodiment. As mentioned above, the storage containers, container tops, base storage container, and top storage container may be non-releasably connected at any point before the assembly 10 is sold to the consumer or user. As shown in Figs. 8a-8b, the storage container 14b may be non-releasably connected to the storage container 14c. To non-releasably connect the storage containers 14b, 14c, the lower non-releasable connection portions 18 of the storage container 14b may be aligned with the upper non-releasable connection portions 16 of the storage container 14c. The upper and lower non-releasable connection portions 16, 18 may then be moved towards one another such that the upper non-releasable connection portions 16 are received in the space 141 (as shown in Fig. 12) of the lower non-releasable connection portion 18. During this movement, referring to the parts shown in Fig. 10, the bottom surface 138 of the lower non-releasable connection portion 18 may contact and push against the inclined contact surface 132 of the protrusion 126 of the upper non-releasable connection portion 16. The lower non-releasable connection portion 18 and/or the upper non-releasable connection portion 16 may include resilient material that enables portions thereof to flex so that the protrusions 126 may be further received in the hollow space 141 of the lower non-releasable connection portion 18. The bottom surface 138 of the lower

non-releasable connection portions 18 may move down along the contact surface 132 of the protrusions 126, whereupon the protrusions 126 snap into the openings 128 of the lower non-releasable connection portions 18. In one embodiment, the lower surface 136 of the lower non-releasable connection portion prevents the disengagement or disconnection of the non-releasable connection between the upper and lower connection portions 16, 18 by abutting against the stop surface 130 of the protrusion 126 of the upper non-releasable connection portion 16. When the storage containers 14b, 14c are non-releasably connected, the lower surface 138 of the lower non-releasable connection portions 18 of the storage container 14b may rest on the ledge surface 140 of the storage container 14c. It should be appreciated that the other storage containers, base storage container, and top storage container may be non-releasably connected in a similar manner. Similarly, the container top 20a or other container tops may be connected to storage container 14b or other storage containers, base storage container, or top storage container in a similar manner.

[0077] After the storage containers, container tops, base storage container, and top storage container have been non-releasably connected to form container modules, the container modules may then be releasably connected to each other. For example, in the embodiment shown in Fig. 2, the upper container module 70 may be releasably connected to the middle container module 72 using latches 28a, and the middle container module 72 may be releasably connected to the lower container module 74 using latches 28b. To releasably connect container module 70 to container module 72, for example, the container module 70 may be placed above the container module 72. The container module 70 may then be brought closer to the container module 72 until the elongated protrusions 116 of the container top 20a of container module 72 are received in the elongated recesses 118 of the storage container 14a of container module 70. Accordingly, the container module 70 rests on the container module 72 and the latches 28a that are pivotally connected to the container top 20a of the container module 72 are aligned with the latch engaging structures 31 provided on the storage container 14a of container module 70. The latches 28a may then be pivoted upwards from a lowered position (see for example Fig. 5) upwards towards the storage container 14a until the upper engaging members 114 of the latches 28a are engaged with the latch engaging structures 31. Accordingly, the container modules 70 and 72 are releasably connected to one another (see for example, Fig. 1a). To release the connection between the container modules 70 and 72, the user may pivot the latches 28a downwards so that the upper engaging members is released from engagement with the latch engaging structures 31. The container module 70 may then be separately carried from container module 72. It should be appreciated that other container modules may be releasably connected or disconnected in a similar manner as the container modules 70, 72 described above. The container module 72 may be releasably connected to the lower container module 74 in a similar manner using the latches 28b.

[0078] Fig. 12 shows a bottom perspective view of the storage container 14b. In this embodiment, an opening 122 is formed under the latch shield 81 to provide access to an actuating portion 124 of the latch member 120. An opening 123 may be provided in the front wall 50 of the drawer to enable a portion of the latch member 120 to pass therethrough. The actuating portion 124 is constructed and arranged to be actuatable by the user to move release the engaging portion 119 from engagement with the latch engaging member 121, which will be described in more detail below. The latch shield 81 of the other storage containers may have the same configuration, and the latch shield 86 of the base storage container 26 may have the same configuration as the latch shield 81.

[0079] Fig. 13a shows the engaging portion 119 of the latch member 120 in the first position and engaged with the latch engaging member 121. As mentioned above, in the first position, the engaging portion 119 is engageable with the latch engaging member 121 to latch the drawer 78b in the closed position to prevent sliding movement of the drawer 78b. The latch member 120 may be pivotally connected to the drawer 78b at a pivot point 160.

[0080] In this embodiment, the latch member 120 is biased upwards by a biasing member 152, taking the form of a compression spring in this embodiment. The biasing member 152 contacts a contact portion 154 of the latch member 120 and pushes the engaging portion 119 upwards towards the latch engaging member 121. The biasing member 152 may be provided on a protrusion 151 extending upwards from the drawer 78b. The latch member 120 may also include a cam surface 156 near or at the engaging portion 119. The cam surface 156 is constructed and arranged to contact a contact surface 158 during sliding movement of the drawer 78b to the closed position, which will be described in more detail later. The latch member 120 may also include an upper surface 159 that may contact the contact surface 158 during sliding movement of the drawer 78b to the closed position. The contact surface 158 may be an edge or any other portion of the container top or storage container disposed above and connected to the storage container 14b. In this embodiment, the latch engaging member 121 prevents the drawer 78b from being slid in the direction of A by engaging with the engaging portion 119, which takes the form of a hook in this embodiment.

[0081] Fig. 13b shows the latch member 120 in the second position and disengaged from the latch engaging member 121. As mentioned above, in the second position, the latch member 120 is releasable from engagement with the latch engaging member 121 to permit sliding movement of the drawer 78b. As shown in this embodiment, when the latch member 120 is in the second position, the latch member 120 is pivoted downwards in the clockwise direction such that the engaging portion

119 is removed from engagement with the latch engaging member 121 and the contact portion 154 is pushed against the biasing member 152, thus compressing the biasing member 152. The actuation portion 124 is constructed and arranged to receive the user's fingers during pivoting of the latch member 120 from the first position to the second position. The latch members 120 of the other storage containers and the latch member 108 of the base storage container 26 may have the same configuration as the latch member 120 described above and may operate in a similar manner.

[0082] Figs. 14a-14c illustrate the operation of sliding the drawer from the open position wherein access to contents of the drawer 78b are permitted to the closed position wherein access to the contents of the drawer are prevented in accordance with an embodiment. In this embodiment, the user may push the latch shield 81 to slide the drawer 78b towards the closed position (e.g., in the direction of B). The drawer 78b may be in the open position initially, as shown in Fig. 14a. In the embodiment shown in Figs. 14a-14c, the latch engaging member 121 is provided on the container top 20a. The user may push against the latch shield 81 to slide the drawer 78b towards the closed position, as shown in Fig. 14b. During this sliding movement, the cam surface 156 of the latch member 120 may push against the contact surface 158 provided on the container top 20a, as shown in Fig. 14b. This may cause the latch member 160 to pivot downwards along pivot point 160. Accordingly, the contact portion 154 of the latch member 120 may push against the biasing member 152. As the drawer 78b is further slid towards the closed position, the contact surface 158 may contact the upper surface 159 of the latch member 120, as shown in Fig. 14c, and may cause the latch member 120 to pivot further downwards such that the contact portion 154 of the latch member 120 further compresses the biasing member 152. As the drawer 78b is pushed further in the direction of B, the latch member 120 may clear the contact surface 158 and may snap upwards in the counterclockwise direction due to the bias of the biasing member 152, causing the hook-shaped engaging portion 119 to be engaged with the latch engaging member 121, as shown in Fig. 15a. Thus, the drawer 78b is locked in the closed position. Accordingly, in the operation described above, the latch shield 81 may shield the latch member 120 from the user such that the user does not have to access the latch member 120 to lock the drawer 78b in the closed position. In other words, the drawer 78b can be locked "automatically" by the user pushing the drawer 78 from the open position to the closed position via the latch shield 81.

[0083] The drawer 78b may be unlocked and slid to the open position as follows. The drawer 78b may initially be locked in the closed position, as shown in Fig. 15a, wherein the engaging portion 119 of the latch member 120 is engaged with the latch engaging member 121 provided on the container top 20a. In this position, the biasing member 152 is biasing the engaging portion 119 upwards so that it is engaged with the latch engaging member 121. The user may insert fingers into the opening 122 formed by the latch shield 81 to access the actuating portion 124 of the latch member 120. The user may push the actuating portion 124 upwards to pivot the latch member 120 along the pivot point 160. As a result, the latch member 120 may be pivoted downwards in the clockwise direction such that the engaging portion 119 is removed from engagement with the latch engaging member 121, and the contact portion 154 is compressing the biasing member 152 downwards, as shown in Fig. 15b. After the engaging portion 119 has been moved downward and disengaged from the latch engaging member 121 and the drawer 78b is unlocked, the user may pull the drawer 78b towards the open position (e.g., in the direction of A), as shown in Fig. 15c. After the user ceases actuation of the actuating portion 124, the biasing member 152 may snap the latch member 120 upwards in the counterclockwise direction to the position shown in Fig. 14a. As mentioned above, the other drawers may be locked/unlocked and moved between the open and closed positions in a similar manner. The latch member 108 may operate in a similar manner as latch member 120 to latch the bin 82 in the closed position. However, instead of sliding movement, the bin 82 may be pivoted between the open and closed positions.

[0084] Figs. 16a-16b illustrate rear plan views of the assembly 10. In Fig. 16a, the pulling handle 24 is retracted in the handle receiving portion 88. A handle lock 90 is provided on the handle receiving portion 88. As mentioned above, the handle lock 90, which may take the form of a rocker, is constructed and arranged to be moveable between 1) a locked position wherein the pulling handle 24 is locked at a selected position such that sliding movement of the pulling handle 24 between the retracted position and the extended position is prevented and 2) an unlocked position wherein sliding movement of the pulling handle 24 between the retracted position and the extended position is permitted. The handle lock 90 may engage with one of the plurality of openings 92 provided in the extension bar 27 when the pulling handle 27 is in the locked position. Fig. 17 shows the handle lock 90 in more detail. In this embodiment, the handle lock 90 includes an actuation portion 162 constructed and arranged to be actuatable to move the handle lock 90 to the disengaged position. In some embodiments, the handle lock 90 may be a type of rocker lock that pivots or rocks about a pivot point.

[0085] Fig. 18 shows a side view of the handle lock 90 in the unlocked position. The handle lock 90 includes the actuation portion 162 and an engagement portion 164, which takes the form of a protrusion in this embodiment, that is constructed and arranged to be received in one of the openings 92 when the handle lock 90 is in the locked position such that sliding movement of the pulling handle 24 between the retracted and extended positions is prevented. That is, to lock the handle lock 90 in the locked position in one embodiment, the engagement por-

tion 164 is received in one of the openings 92. To unlock the handle lock 90, the engagement portion 164 is removed from the openings 92. A pivot axis 166, which may be defined by a pivot pin, is provided between the actuation portion 162 and the engagement portion 164. Accordingly, the lock handle 90 may "rock" along the pivot axis 166. The actuation portion and the engagement portion 164 may be integrally formed or may be separate pieces connected to each other to form the handle lock 90.

[0086] Fig. 19a shows a detailed side view of the actuation portion 162 of the handle lock 90. A biasing member 168 biases the handle lock 90 in the locked position. In this embodiment, the biasing member 168 contacts at least a portion of the actuation portion 162 of the handle lock 90. The actuation portion 162 of the handle lock 90 is actuatable against the bias of the biasing member 168 to pivot the lock to the unlocked position, as shown in Figs. 18 and 19b. It should be appreciated that in other embodiments, the biasing member 168 may be located at other locations and/or may take other forms.

[0087] The pulling handle 24 may be slid to adjust the height of the handle portion 24 as follows in accordance with an embodiment. The handle lock 90 may initially be biased in the unactuated and locked position, as shown in Fig. 19a. When the handle lock 90 is in this position, the engagement portion 164 is received in one of the openings 92 to lock the pulling handle 24 at a selected position such that sliding movement of the pulling handle 24 is prevented. The user may push the actuation portion 162 of the handle 90 against the bias of the biasing member 168 to the actuated position, as shown in Figs. 18 and 19b. This may cause the handle lock 90 to pivot in the counterclockwise direction. Accordingly, the engagement portion 164 is removed from the opening 92. The pulling handle 24 may then be slid up/down between the retracted and extended positions with respect to the handle receiving portion 88. After the desired position of the pulling handle 24 has been selected and an opening 92 is aligned with the engagement portion 164, the user may release actuation of the actuation portion 162, whereupon the biasing member 168 may snap the actuation portion 162 in the clockwise direction back to the unactuated position shown in Fig. 19a. Accordingly, the engagement portion 164 of the handle lock 90 may be received in the selected opening 92 to lock the pulling handle 24 at the selected position. Alternatively, the user might not have to align an opening 92 with the engagement portion 164. For example, the user may cease actuation of the actuation portion 162 regardless of the alignment of an opening 92 with the engagement portion 164. To lock the handle lock 90, the user may then proceed to move the pulling handle 24 up or down. The contact between the engagement portion 164 and the surface 91 of the extension bar 27 prevents the handle lock 90 from being moved back to the locked position. Accordingly, the handle lock 90 may be in the unlocked position, as shown in Fig. 18. As the user moves the pulling handle 24 up or down, one of the openings 92 may become aligned with the engagement portion 164, whereupon the biasing member 168 may snap the handle lock 90 in the clockwise direction so that the engagement portion 164 is received in the opening 92 that is aligned therewith. Accordingly, the pulling handle 90 is once again locked in the selected position.

[0088] As mentioned above, it should be appreciated that the rolling container assembly 10 may include any number of container modules that are releasably connected together using latches. The container modules may have a variety of configurations, and any combination of storage containers, container tops, base storage containers, and top storage containers may be non-releasably connected together to form the container modules.

[0089] Although the invention has been described in detail for the purpose of illustration based on what is currently considered to be the most practical and preferred embodiments, it is to be understood that such detail is solely for that purpose and that the invention is not limited to the disclosed embodiments, but, on the contrary, is intended to cover modifications and equivalent arrangements that are within the scope of the appended claims. For example, it is to be understood that the present invention contemplates that, to the extent possible, one or more features of any embodiment may be combined with one or more features of any other embodiment.

Claims

1. A container module(70, 72, 74), comprising:

a container top (20a, 20b) having a non-releasable connection portion (22) of a first type;
a storage container (14a, 14b, 14c, 14d, 82) constructed and arranged to be non-releasably connected to the container top or at least one other storage container, the storage container comprising:

an upper non-releasable connection portion (16) of a second type and a lower non-releasable connection portion (18) of the first type,
the upper non-releasable connection portion being constructed and arranged to be non-releasably connected to 1) a lower non-releasable connection portion of the first type of the at least one other storage container or 2) the non-releasable connection portion of the first type of the container top, and
the lower non-releasable connection portion being constructed and arranged to be non-releasably connected to an upper non-releasable connection portion of the second

type of the at least one other storage container; and
a latch (28a, 28b) constructed and arranged to releasably connect the storage container to the at least one other storage container if positioned on the container top.

2. The container module of claim 1, wherein the latch is disposed on the container top and constructed and arranged to be releasably connected to a latch engaging structure defined on the storage container positioned above the container top.

3. The container module of claim 1 or 2, wherein the latch member is pivotally connected to the container top and is pivotable upwards to releasably connect to a latch engaging structure defined on the storage container positioned above the container top.

4. The container module of any one of the preceding claims, wherein the upper non-releasable connection portion is non-releasably connected to the non-releasable connection portion of the first type via a snap-fit connection (126, 132, 138).

5. The container module of any one of the preceding claims, wherein the lower non-releasable connection portion comprises openings (128) constructed and arranged to receive protrusions (126) of the upper non-releasable connection portion when the lower non-releasable connection portion is non-releasably connected to the upper non-releasable connection portion.

6. The container module of any one of the preceding claims, wherein the storage container comprises a sliding drawer (78a, 78b, 78c).

7. The container module of any one of the preceding claims, wherein the storage container comprises a pivotable bin (82).

8. An apparatus (10) for transporting articles between working locations, comprising a container module according to any one of the preceding claims.

9. An apparatus according to claim 8, comprising:

one or more rotatable ground engaging wheels (12) mounted toward the bottom of the apparatus for rotation about an axis to provide rolling support for the apparatus; and
a manually engageable pulling handle (24), the pulling handle and the one or more ground engaging wheels being arranged to enable a user to manually pull the pulling handle generally rearwardly so as to tilt the apparatus rearwardly to a tilted rolling movement position, thereby enabling the user to roll the apparatus to a desired location by pushing or pulling the pulling handle in a desired direction.

10. An apparatus according to claim 9, wherein the pulling handle is slideable between a retracted position and an extended position, and the apparatus further comprises a rocker lock (90) constructed and arranged to be moveable between 1) a locked position wherein the pulling handle is locked at a selected position such that sliding movement of the pulling handle between the retracted position and the extended position is prevented and 2) an unlocked position wherein sliding movement of pulling handle between the retracted position and the extended position is permitted,
wherein the rocker lock has a first portion (162) and a second portion (164), the rocker lock having a pivot axis (166) provided between the first portion and the second portion, and a biasing member (168) that biases the rocker lock towards the locked position and is actuatable against the bias of the biasing member to pivot the rocker lock to the unlocked position, and wherein the second portion is constructed and arranged to lock the pulling handle when the rocker lock is in the locked position.

11. The apparatus of claim 10, wherein the first portion and the second portion are integrally formed.

12. The apparatus of claim 10 or 11, wherein the pulling handle comprises a handle portion (25) constructed and arranged to be engageable by a user and an extension bar (27) connected to the handle portion.

13. The apparatus of claim 12, wherein the extension bar comprises a plurality of openings (92) and wherein the second portion of the rocker lock comprises a protrusion constructed and arranged to be received in one of the plurality of openings of the extension bar when the rocker lock is in the locked position.

14. The apparatus of claim 12 or 13, wherein the extension bar is telescopically received in a receiving portion (88) of the apparatus.

Patentansprüche

1. Behältermodul (70, 72, 74), umfassend:

eine Behälteroberseite (20a, 20b) mit einem nichtlösbaren Verbindungsabschnitt (22) einer ersten Art;
einen Lagerbehälter (14a, 14b, 14c, 14c, 82), der so aufgebaut und angeordnet ist, dass er nicht lösbar mit der Behälteroberseite oder zumindest einem anderen Lagerbehälter verbun-

den ist, wobei der Lagerbehälter Folgendes umfasst:

einen oberen nichtlösbaren Verbindungsabschnitt (16) von einer zweiten Art und einen unteren nichtlösbaren Verbindungsabschnitt (18) von der ersten Art, wobei
der obere nichtlösbare Verbindungsabschnitt so aufgebaut und angeordnet ist, dass er nicht lösbar mit 1) einem unteren nichtlösbaren Verbindungsabschnitt der ersten Art des zumindest einen anderen Lagerbehälters oder 2) dem nichtlösbaren Verbindungsabschnitt der ersten Art der Behälterseite verbunden ist, und
der untere nichtlösbare Verbindungsabschnitt so aufgebaut und angeordnet ist, dass er nicht lösbar mit einem oberen nichtlösbaren Verbindungsabschnitt der zweiten Art des zumindest einen anderen Lagerbehälters verbunden ist; und
eine Verriegelung (28a, 28b), die so aufgebaut und angeordnet ist, dass sie den Lagerbehälter lösbar mit dem zumindest einen anderen Lagerbehälter verbindet, wenn dieser an der Behälteroberseite positioniert ist.

2. Behältermodul nach Anspruch 1, wobei die Verriegelung an der Behälteroberseite angeordnet ist und so aufgebaut und angeordnet ist, dass sie lösbar mit einem Verriegelungseingreifaufbau verbunden werden kann, der an dem Lagerbehälter, welcher über der Behälteroberseite positioniert ist, definiert ist.

3. Behältermodul nach Anspruch 1 oder 2, wobei das Verriegelungselement schwenkbar mit der Behälteroberseite verbunden ist und nach oben schwenkbar ist, um sich lösbar mit einem Verriegelungseingreifaufbau zu verbinden, der an dem Lagerbehälter, welcher über der Behälteroberseite positioniert ist, definiert ist.

4. Behältermodul nach einem der vorhergehenden Ansprüche, wobei der obere nichtlösbare Verbindungsabschnitt über eine Schnappverbindung (126, 132, 138) nicht lösbar mit dem nichtlösbaren Verbindungsabschnitt der ersten Art verbunden ist.

5. Behältermodul nach einem der vorhergehenden Ansprüche, wobei der untere nichtlösbare Verbindungsabschnitt Öffnungen (128) umfasst, die so aufgebaut und angeordnet sind, dass sie Vorsprünge (126) des oberen nichtlösbaren Verbindungsabschnitts aufnehmen, wenn der untere nichtlösbare Verbindungsabschnitt nicht lösbar mit dem oberen nichtlösbaren Verbindungsabschnitt verbunden ist.

6. Behältermodul nach einem der vorhergehenden Ansprüche, wobei der Lagerbehälter eine Schublade (78a, 78b, 78c) umfasst.

7. Behältermodul nach einem der vorhergehenden Ansprüche, wobei der Lagerbehälter einen schwenkbaren Eimer (82) umfasst.

8. Vorrichtung (10) zum Transportieren von Artikeln zwischen Arbeitsplätzen, umfassend ein Behältermodul nach einem der vorhergehenden Ansprüche.

9. Vorrichtung nach Anspruch 8, umfassend:

ein oder mehr drehbare, mit dem Boden eingreifende Räder (12), die an der Unterseite der Vorrichtung um eine Achse drehend angebracht sind, um eine rollende Stütze für die Vorrichtung bereitzustellen; und
einen Zuggriff (24), mit dem ein händischer Eingriff erfolgen kann, wobei der Zuggriff und das eine oder die mehreren mit dem Boden eingreifenden Räder so angeordnet sind, dass sie einem Benutzer ermöglichen, den Zuggriff von Hand im Allgemeinen nach hinten zu ziehen, um die Vorrichtung nach hinten in eine gekippte Rollbewegungsstellung zu kippen, wodurch dem Benutzer ermöglicht wird, die Vorrichtung durch Schieben oder Ziehen des Zuggriffs in eine gewünschte Richtung an eine gewünschte Stelle zu rollen.

10. Vorrichtung nach Anspruch 9, wobei der Zuggriff zwischen einer zurückgezogenen und einer ausgezogenen Stellung geschoben werden kann, und wobei die Vorrichtung ferner eine Kipphebelarretierung (90) umfasst, die so aufgebaut und angeordnet ist, dass sie zwischen 1) einer arretierten Stellung, in der der Zuggriff so an einer gewählten Position arretiert ist, dass eine Schiebebewegung des Zuggriffs zwischen der eingezogenen Stellung und der ausgezogenen Stellung verhindert wird, und 2) einer nicht arretierten Stellung, in der eine Schiebebewegung des Zuggriffs zwischen der eingezogenen Stellung und der ausgezogenen Stellung gestattet wird, beweglich ist, wobei die Kipphebelarretierung einen ersten Abschnitt (162) und einen zweiten Abschnitt (164) aufweist, wobei die Kipphebelarretierung eine Drehachse (166), die zwischen dem ersten Abschnitt und dem zweiten Abschnitt bereitgestellt ist, und ein Vorspannelement (168), das die Kipphebelarretierung in die arretierte Stellung vorspannt, aufweist und gegen die Vorspannung des Vorspannelements betätigt werden kann, um die Kipphebelarretierung in die nicht arretierte Stellung zu schwenken, und wobei der zweite Abschnitt so aufgebaut und angeordnet ist, dass er den Zuggriff arretiert, wenn sich die Kipphebelarretierung in der ar-

Klein Tools Ex. 1026, Page 15 of 37

retierten Stellung befindet.

11. Vorrichtung nach Anspruch 10, wobei der erste Abschnitt und der zweite Abschnitt einstückig ausgeführt sind.

12. Vorrichtung nach Anspruch 10 oder 11, wobei der Zuggriff einen Griffabschnitt (25), der so aufgebaut und angeordnet ist, dass ein Benutzer damit eingreifen kann, und eine Verlängerungsstange (27), die mit dem Griffabschnitt verbunden ist, umfasst.

13. Vorrichtung nach Anspruch 12, wobei die Verlängerungsstange mehrere Öffnungen (92) umfasst, und wobei der zweite Abschnitt der Kipphebelarretierung einen Vorsprung umfasst, der so aufgebaut und angeordnet ist, dass er in einer der mehreren Öffnungen der Verlängerungsstange aufgenommen wird, wenn sich die Kipphebelarretierung in der arretierten Stellung befindet.

14. Vorrichtung nach Anspruch 12 oder 13, wobei die Verlängerungsstange teleskopisch in einem Aufnahmeabschnitt (88) der Vorrichtung aufgenommen ist.

Revendications

1. Module de conteneur (70, 72, 74), comprenant :

une partie supérieure de conteneur (20a, 20b) présentant une partie de raccordement non détachable (22) d'un premier type ;
un conteneur de stockage (14a, 14b, 14c, 14d, 82) construit et agencé pour être raccordé de manière non détachable à la partie supérieure de conteneur ou au moins à un autre conteneur de stockage, le conteneur de stockage comprenant :

une partie de raccordement non détachable supérieure (16) d'un deuxième type et une partie de raccordement non détachable inférieure (18) du premier type,
la partie de raccordement non détachable supérieure étant construite et agencée pour être raccordée de manière non détachable à 1) une partie de raccordement non détachable inférieure du premier type de l'autre ou des autres conteneurs de stockage ou 2) la partie de raccordement non détachable du premier type de la partie supérieure de conteneur, et
la partie de raccordement non détachable inférieure étant construite et agencée pour être raccordée de manière non détachable à une partie de raccordement non détachable supérieure du deuxième type de l'autre ou des autres conteneurs de stockage ; et
un verrou (28a, 28b) construit et agencé pour raccorder de manière détachable le conteneur de stockage à l'autre ou aux autres conteneurs de stockage s'il est positionné sur la partie supérieure de conteneur.

2. Module de conteneur selon la revendication 1, dans lequel le verrou est disposé sur la partie supérieure de conteneur et construit et agencé pour être raccordé de manière détachable à une structure d'entrée en contact avec un verrou définie sur le conteneur de stockage positionnée au-dessus de la partie supérieure de conteneur.

3. Module de conteneur selon la revendication 1 ou 2, dans lequel l'élément verrou est raccordé de manière pivotante à la partie supérieure de conteneur et peut pivoter vers le haut pour être raccordé de manière détachable à une structure d'entrée en contact avec le verrou définie sur le conteneur de stockage positionnée au-dessus de la partie supérieure de conteneur.

4. Module de conteneur selon l'une quelconque des revendications précédentes, dans lequel la partie de raccordement non détachable supérieure est raccordée de manière non détachable à la partie de raccordement non détachable du premier type par le biais d'un raccordement encliquetable (126, 132, 138).

5. Module de conteneur selon l'une quelconque des revendications précédentes, dans lequel la partie de raccordement non détachable inférieure comprend des ouvertures (128) construites et agencées pour recevoir des parties saillantes (126) de la partie de raccordement non détachable supérieure lorsque la partie de raccordement non détachable inférieure est raccordée de manière non détachable à la partie de raccordement non détachable supérieure.

6. Module de conteneur selon l'une quelconque des revendications précédentes, dans lequel le conteneur de stockage comprend un tiroir coulissant (78a, 78b, 78c).

7. Module de conteneur selon l'une quelconque des revendications précédentes, dans lequel le conteneur de stockage comprend une benne pivotante (82).

8. Appareil (10) destiné à transporter des articles entre des emplacements de travail, comprenant un module de conteneur selon l'une quelconque des revendications précédentes.

9. Appareil selon la revendication 8, comprenant :

une ou plusieurs roues rotatives (12) en contact avec le sol montées en direction du fond de l'appareil afin de tourner autour d'un axe pour fournir un support de roulement à l'appareil ; et
une poignée de traction (24) à prise manuelle, la poignée de traction et la ou les roues en contact avec le sol étant conçues pour permettre à un utilisateur de tirer manuellement la poignée de traction généralement vers l'arrière de manière à incliner l'appareil vers l'arrière dans une position de mouvement roulant incliné, ce qui permet à l'utilisateur de faire rouler l'appareil jusqu'à un emplacement souhaité en poussant ou en tirant la poignée de traction dans une direction souhaitée.

10. Appareil selon la revendication 9, dans lequel la poignée de traction peut coulisser entre une position rentrée et une position sortie, et l'appareil comprend en outre une bascule de verrouillage (90) construite et agencée pour être mobile entre 1) une position verrouillée dans laquelle la poignée de traction est verrouillée dans une position sélectionnée de telle sorte que le mouvement coulissant de la poignée de traction entre la position rentrée et la position sortie est empêché et 2) une position déverrouillée dans laquelle le mouvement coulissant de la poignée de traction entre la position rentrée et la position sortie est permis,
dans lequel la bascule de verrouillage présente une première partie (162) et une deuxième partie (164), la bascule de verrouillage présentant un axe de pivotement (166) situé entre la première partie et la deuxième partie, et un élément de sollicitation (168) qui sollicite la bascule de verrouillage en direction de la position verrouillée et peut être actionné à l'encontre de la sollicitation de l'élément de sollicitation pour faire pivoter la bascule de verrouillage dans la position déverrouillée, et dans lequel la deuxième partie est construite et agencée pour verrouiller la poignée de traction lorsque la bascule de verrouillage se trouve dans la position verrouillée.

11. Appareil selon la revendication 10, dans lequel la première partie et la deuxième partie sont formées d'un seul tenant.

12. Appareil selon la revendication 10 ou 11, dans lequel la poignée de traction comprend une partie de poignée (25) construite et agencée pour pouvoir être saisie par un utilisateur et une barre d'extension (27) raccordée à la partie de poignée.

13. Appareil selon la revendication 12, dans lequel la barre d'extension comprend une pluralité d'ouvertures (92) et dans lequel la deuxième partie de la bascule de verrouillage comprend une saillie construite et agencée pour être reçue dans une parmi la pluralité d'ouvertures de la barre d'extension lorsque la bascule de verrouillage se trouve dans la position verrouillée.

14. Appareil selon la revendication 12 ou 13, dans lequel la barre d'extension est reçue de manière télescopique dans une partie de réception (88) de l'appareil.

Klein Tools Ex. 1026, Page 17 of 37

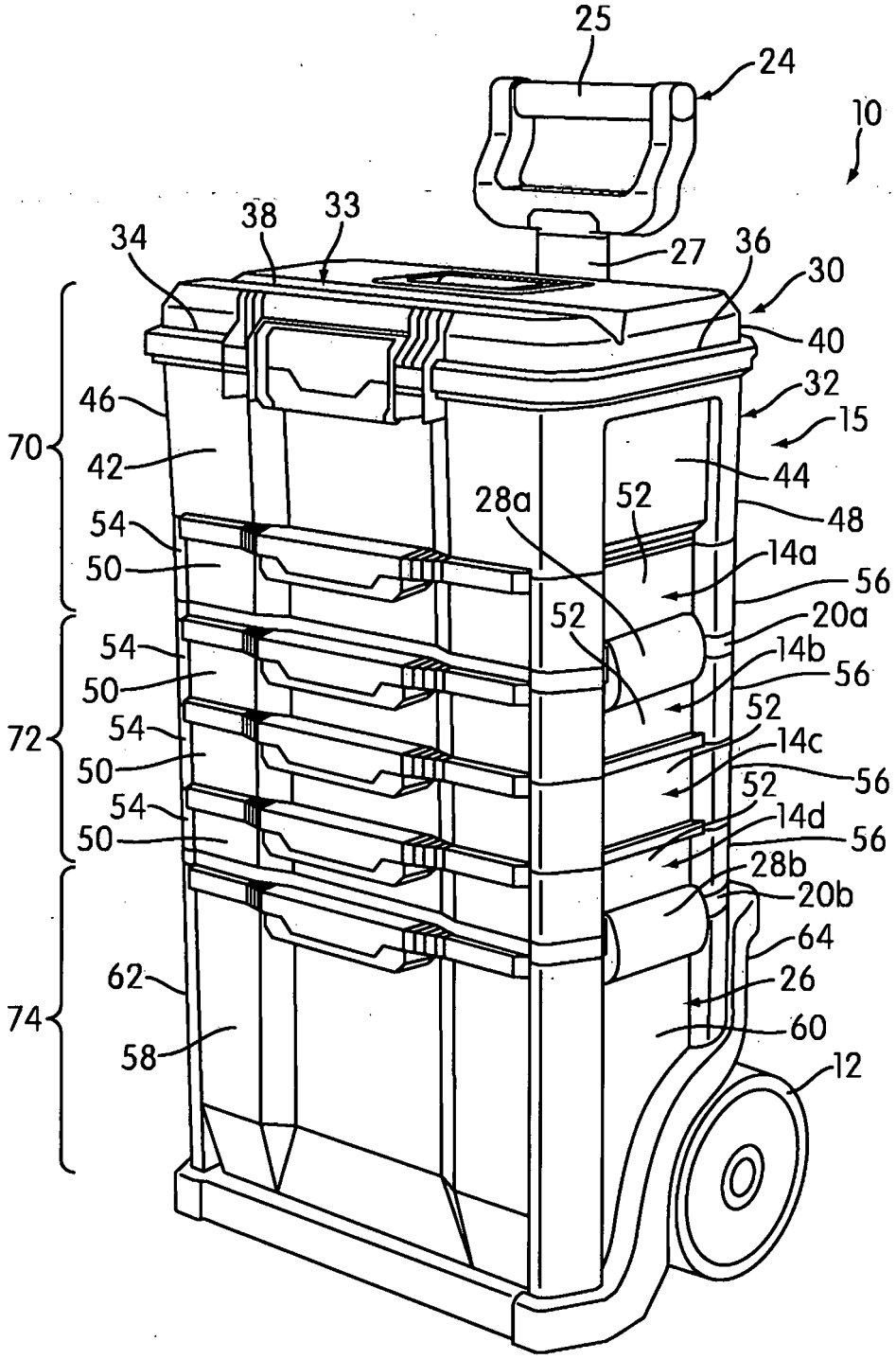
25
24
10
38
33
34
27
36
30
40
32
15
46
70
42
44
28a
52
48
54
14a
50
56
52
20a
54
14b
50
56
52
72
54
14c
50
56
52
54
14d
50
56
28b
20b
64
62
26
74
60
58
12

FIG. 1a

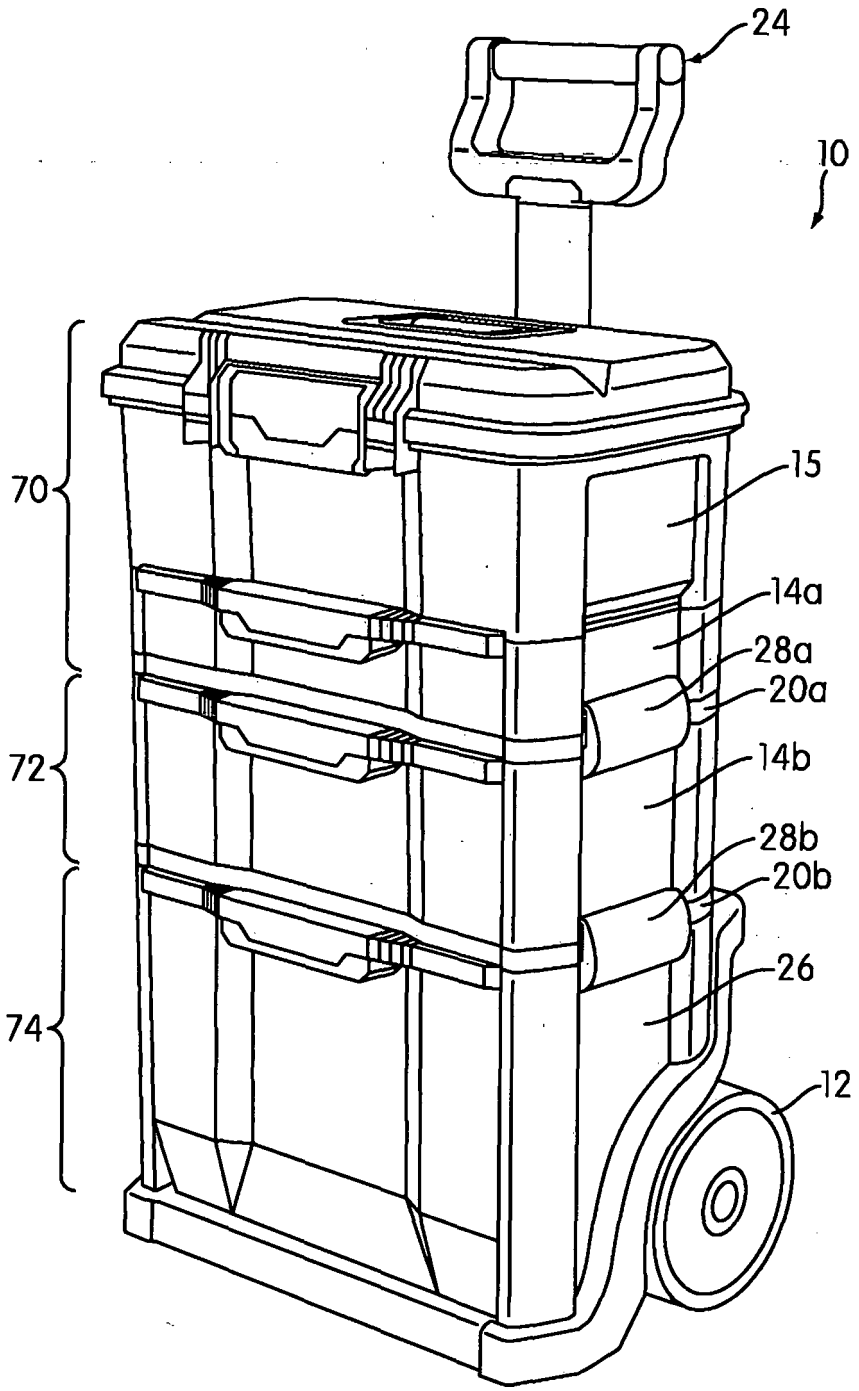

FIG. 1b

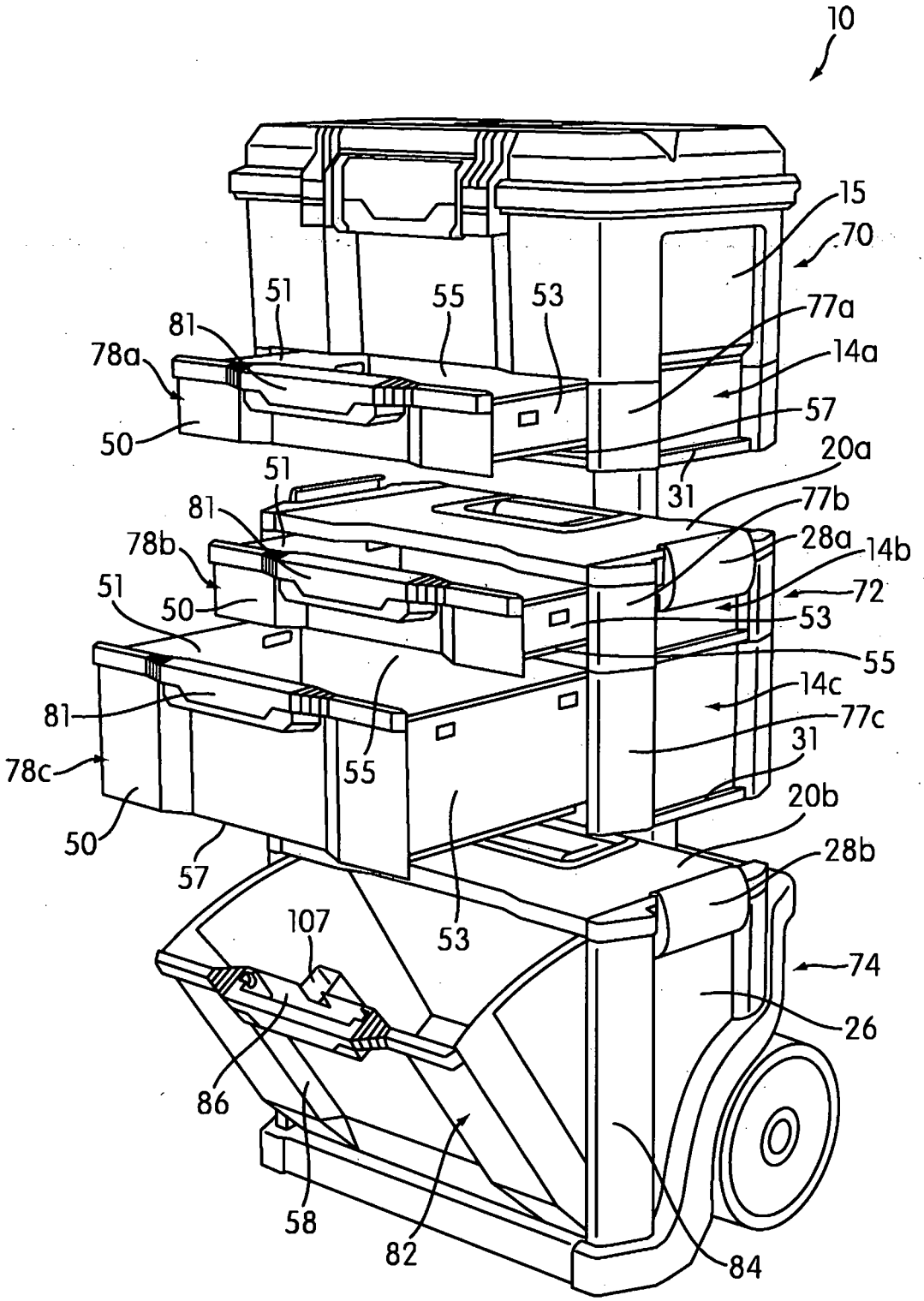
10
15
70
51
55
53
77a
81
78a
14a
57
50
20a
51
31
77b
81
28a
78b
14b
72
51
50
53
55
14c
81
77c
31
78c
55
20b
50
28b
57
107
53
74
26
86
58
82
84

FIG. 2

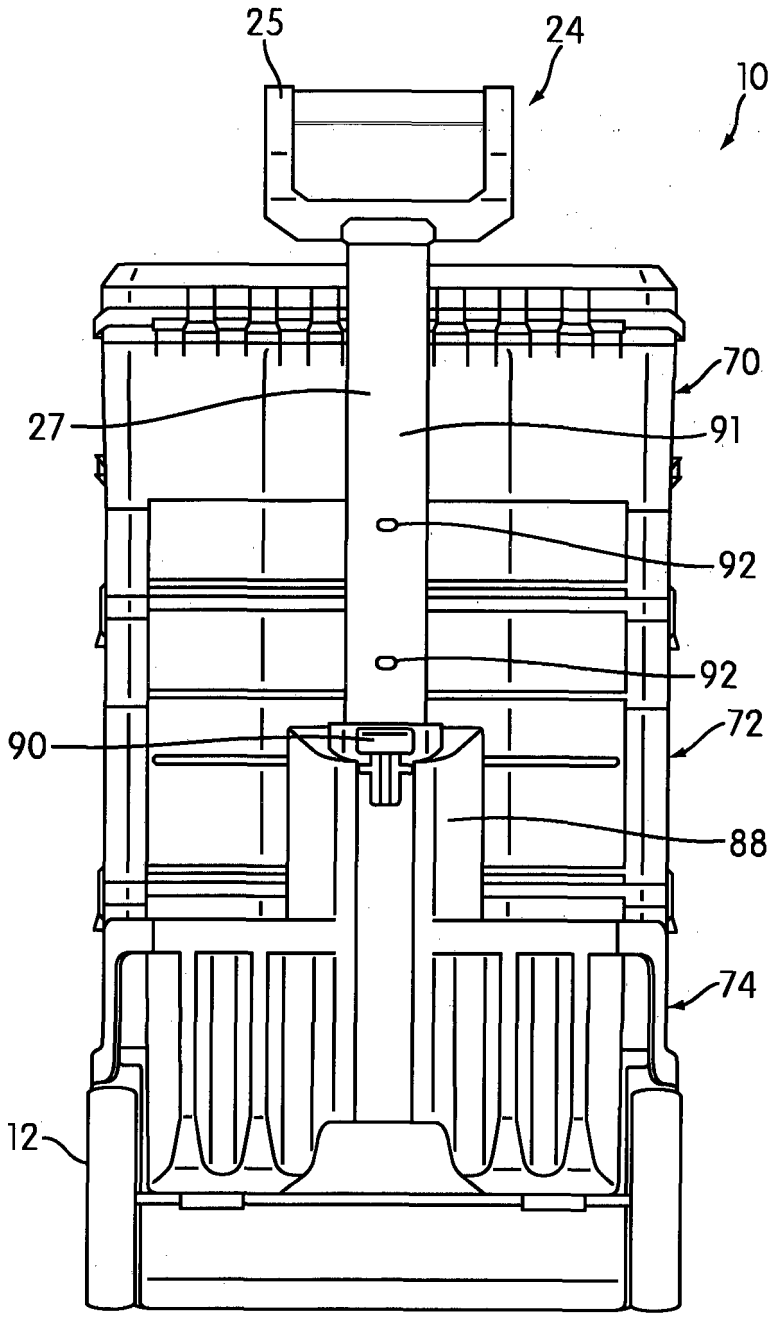

FIG. 3

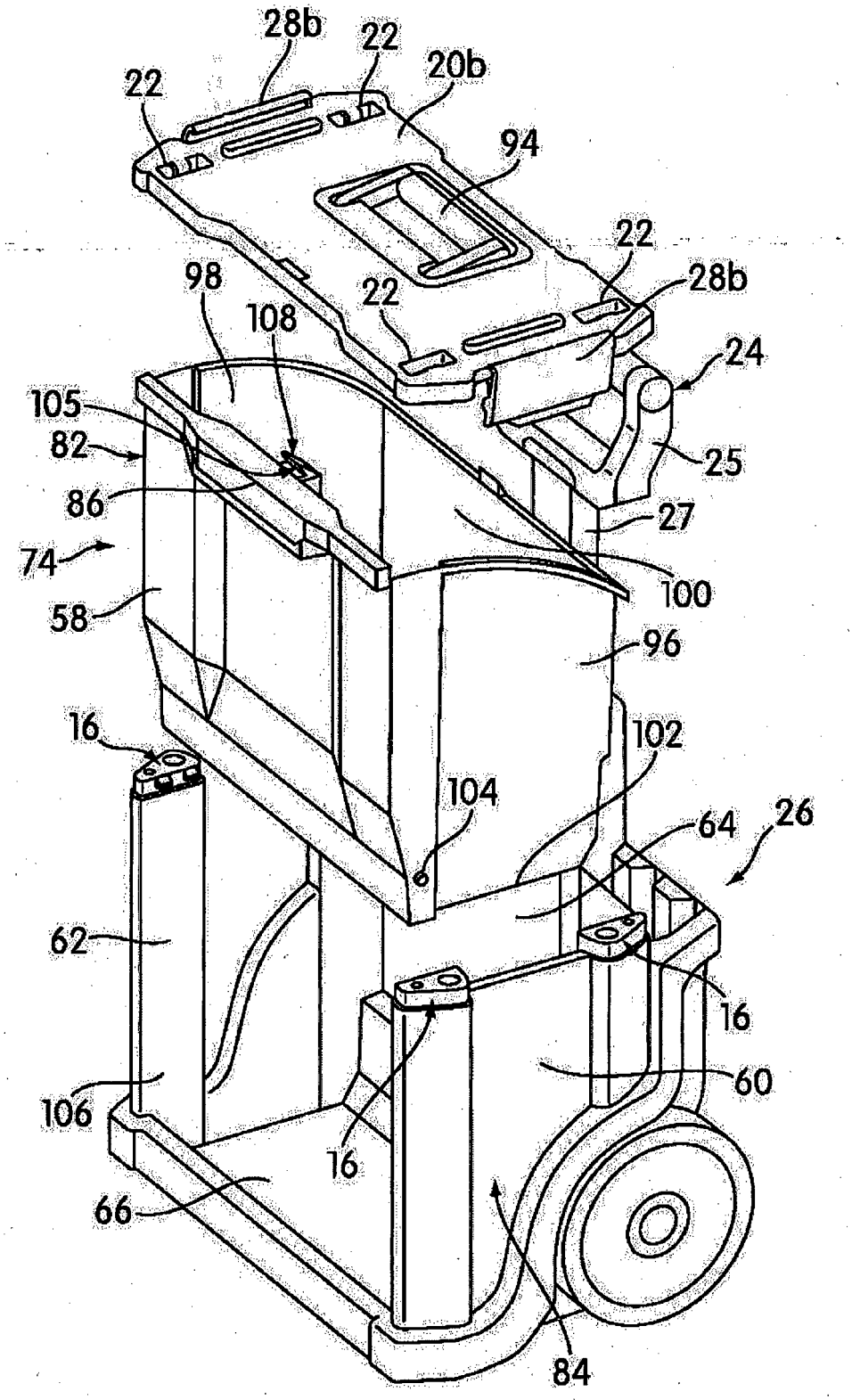
28b
22
20b
22
94
22
28b
98
22
108
24
105
82
25
86
27
74
100
58
96
16
102
104
64
26
62
16
60
106
16
66
84

FIG. 4

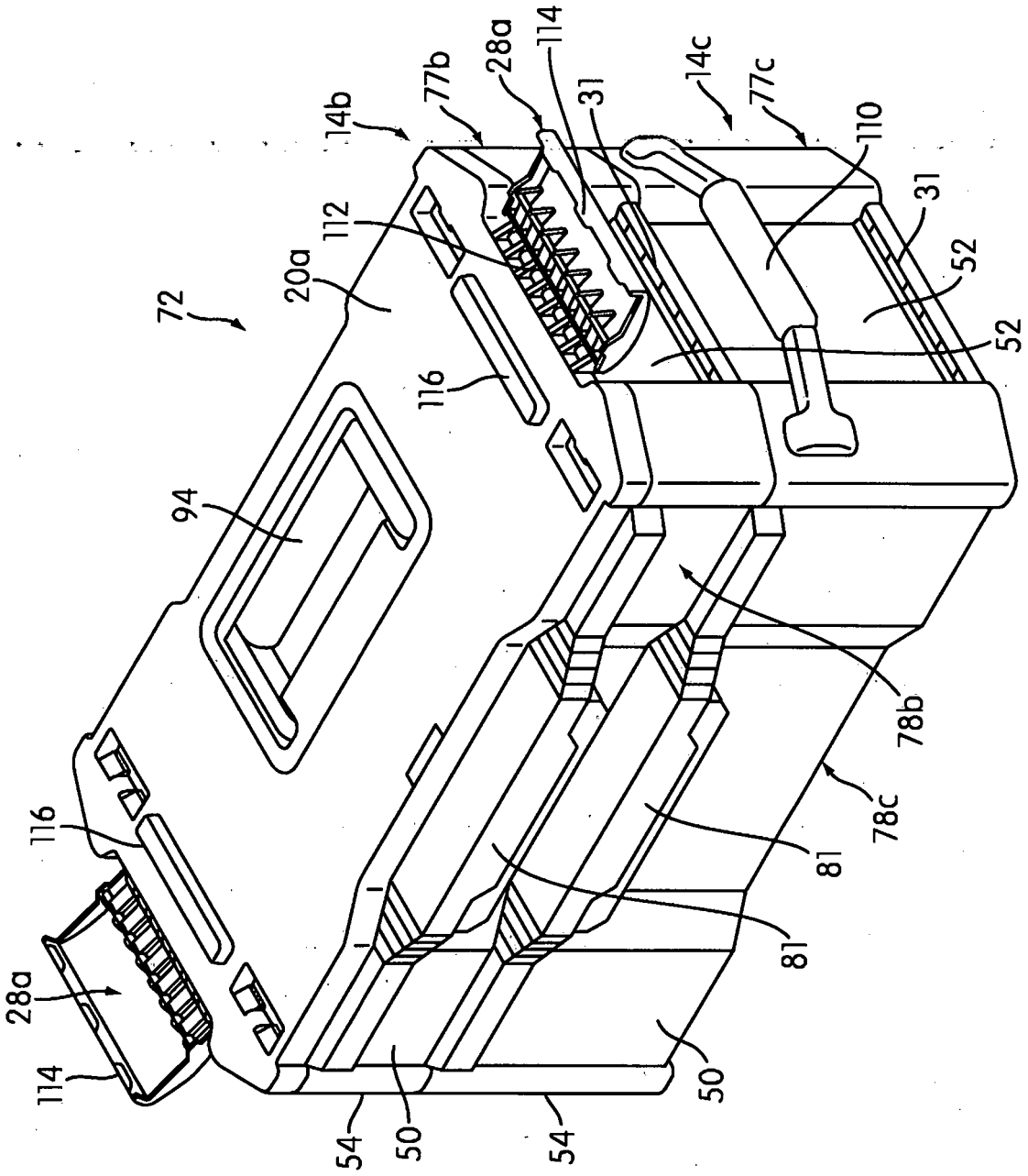
72
14b
77b
28a
114
31
14c
77c
110
31
52
52
20a
112
116
94
78b
78c
81
81
116
28a
114
54
50
54
50

FIG. 5

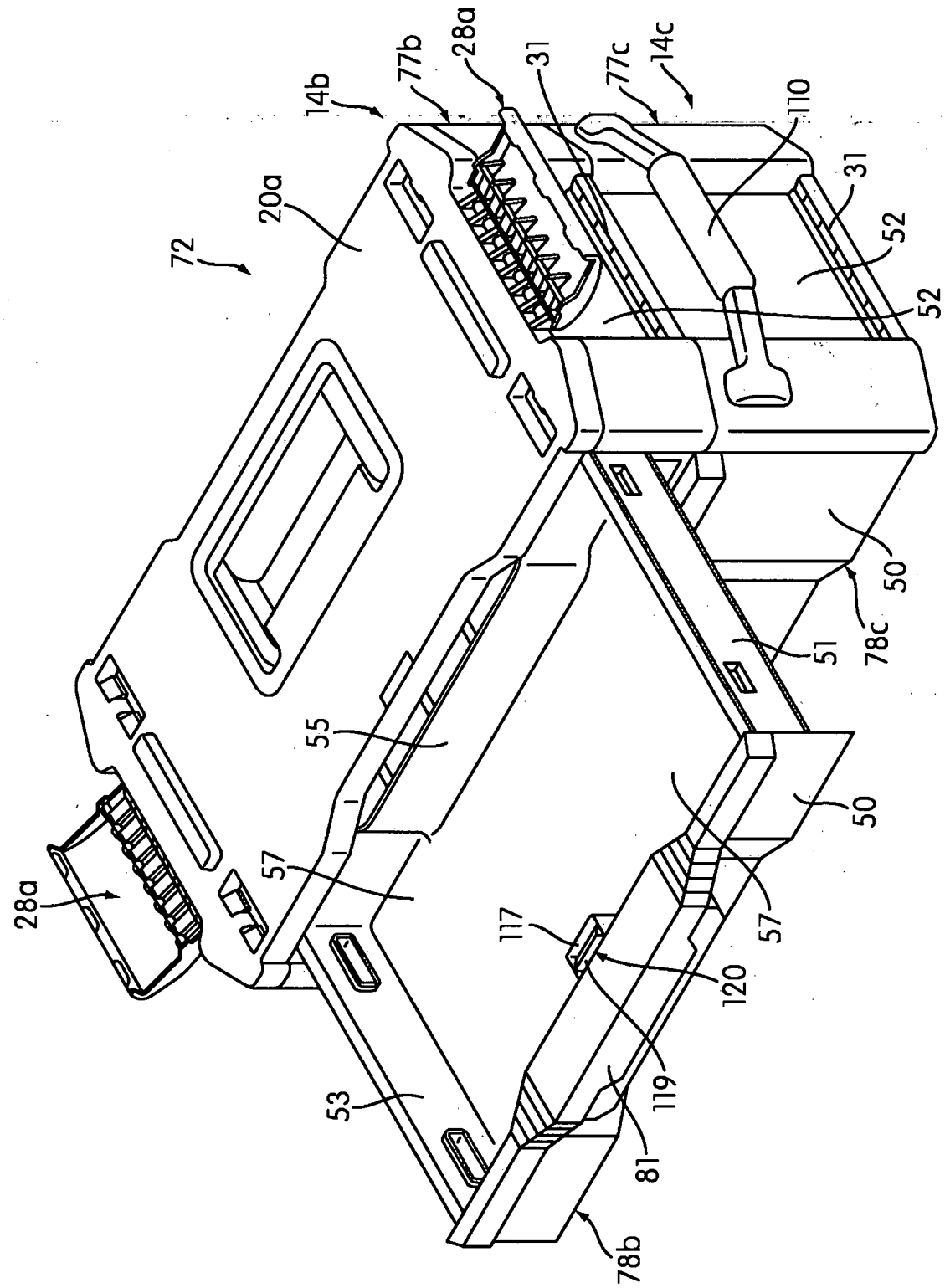
72
20a
14b
77b
28a
31
77c
14c
110
31
52
52
50
78c
51
55
57
28a
50
57
117
120
119
53
81
78b

FIG. 6

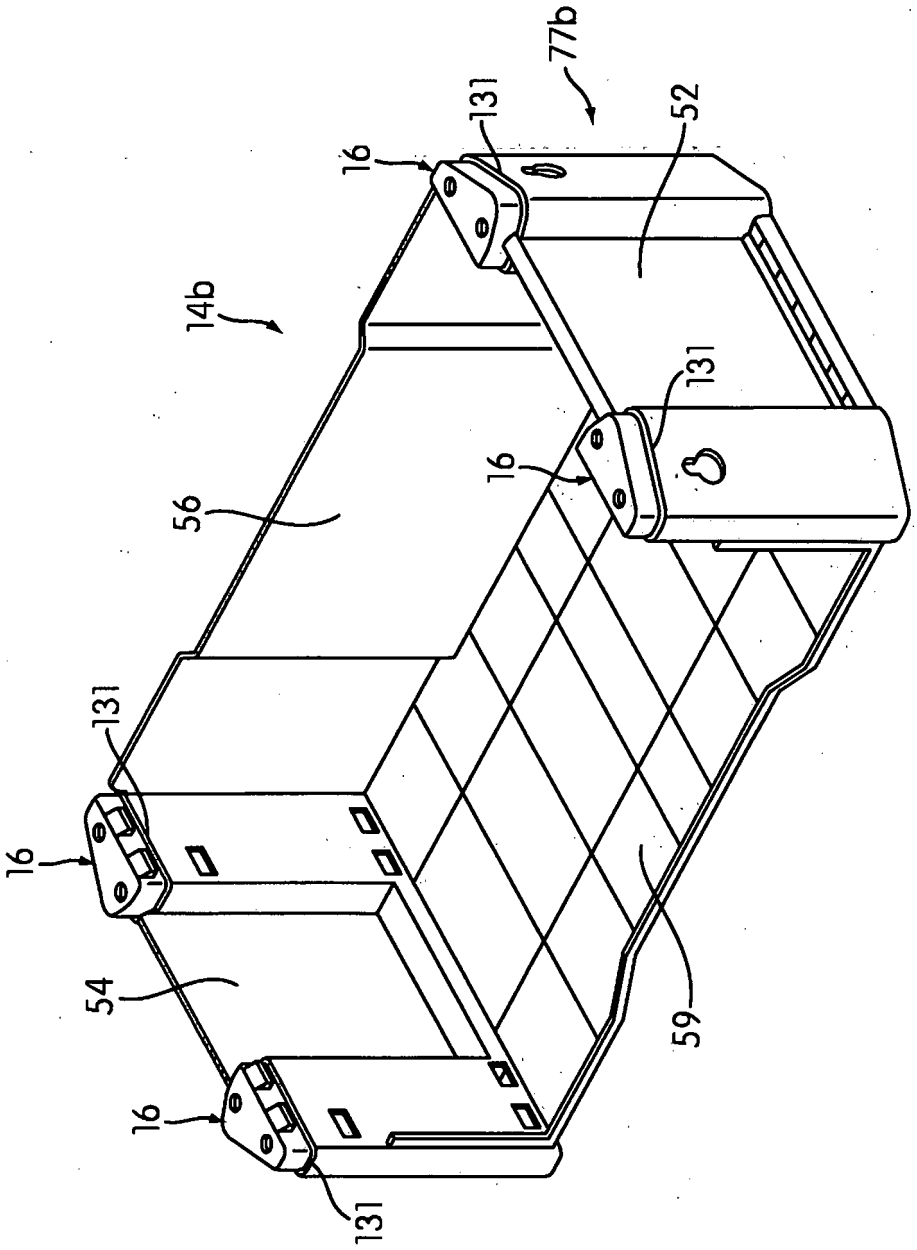

FIG. 7

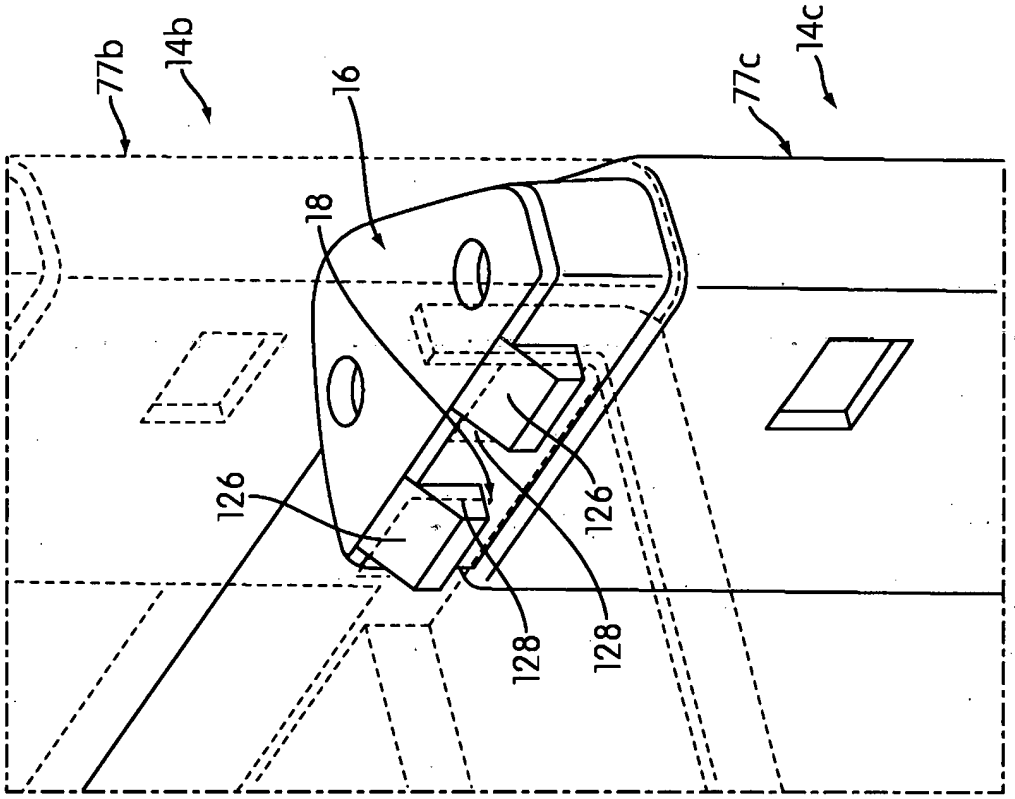
77b
14b
16
18
126
128
128
126
77c
14c

FIG. 8b

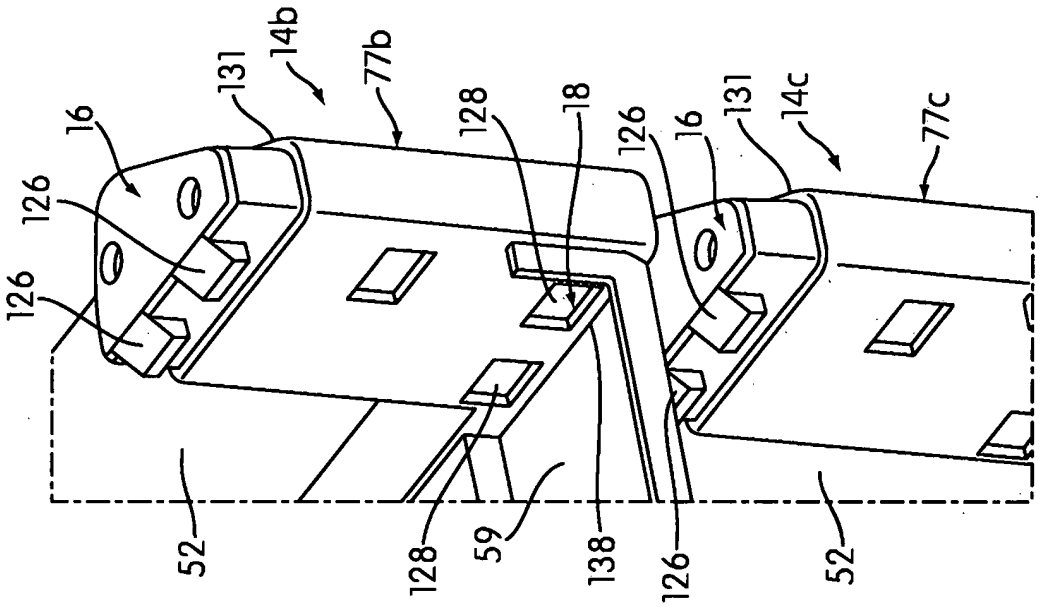
16
126
126
131
14b
77b
128
18
126
16
131
14c
77c
52
128
59
138
126
52

FIG. 8a

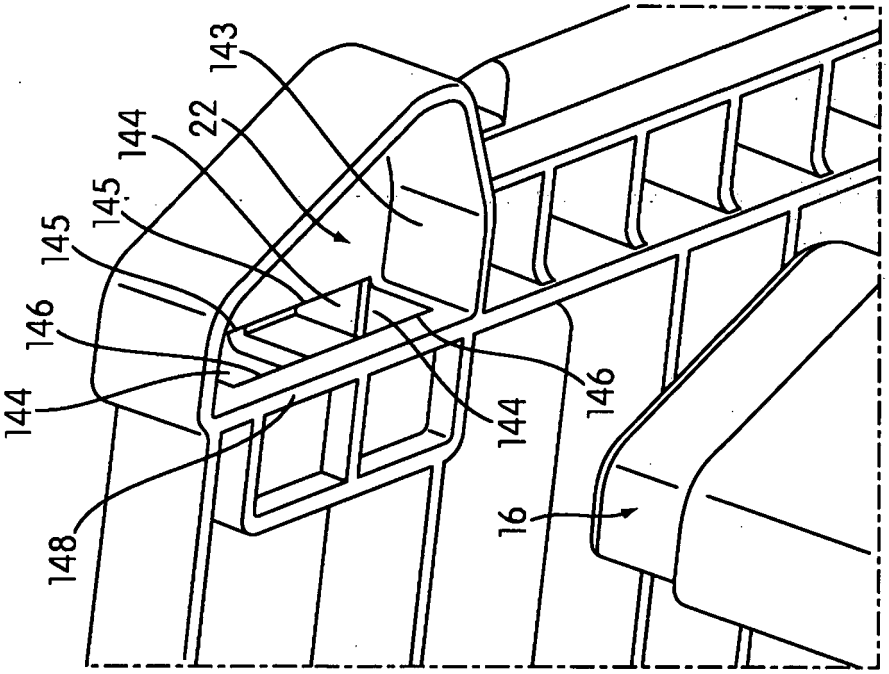
143
22
144
145
145
146
144
148
144
146
16

FIG. 9b

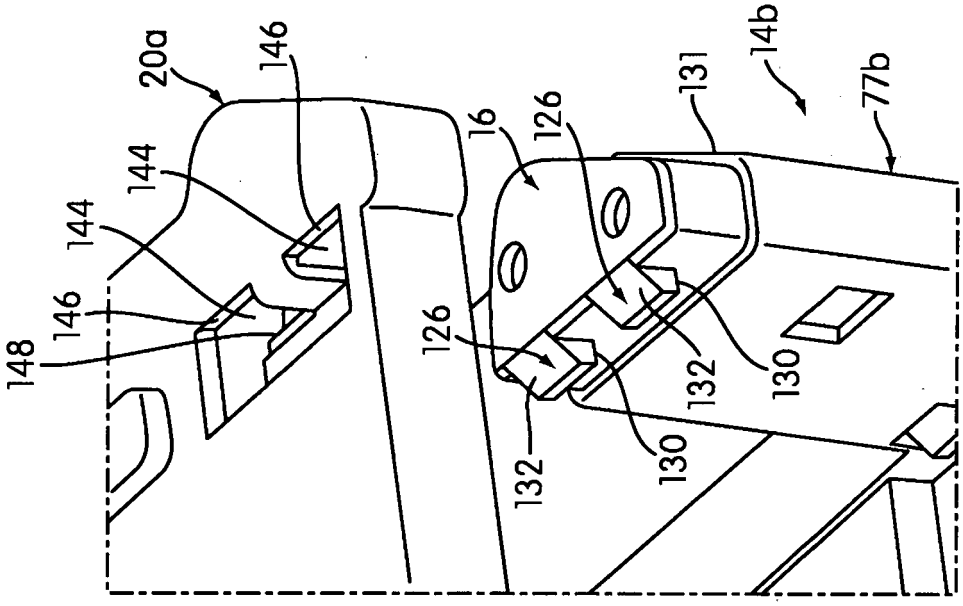
20a
146
144
144
146
148
16
126
126
131
14b
77b
132
130
132
130

FIG. 9a

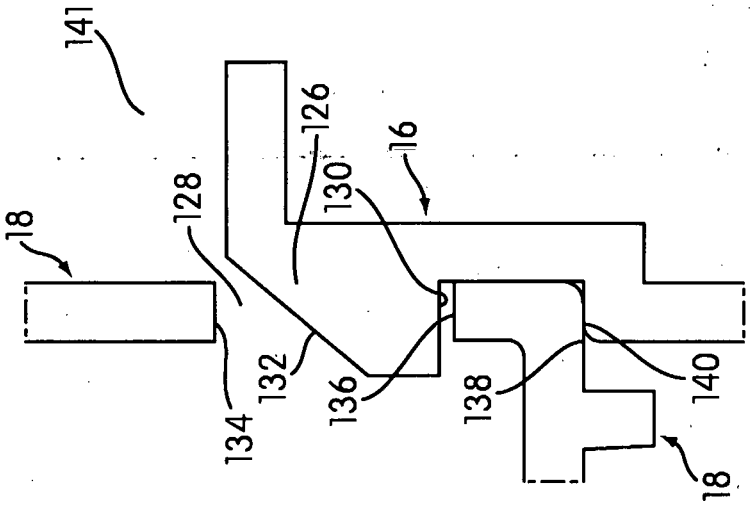
141
18
128
126
130
16
134
132
136
138
140
18

FIG. 10

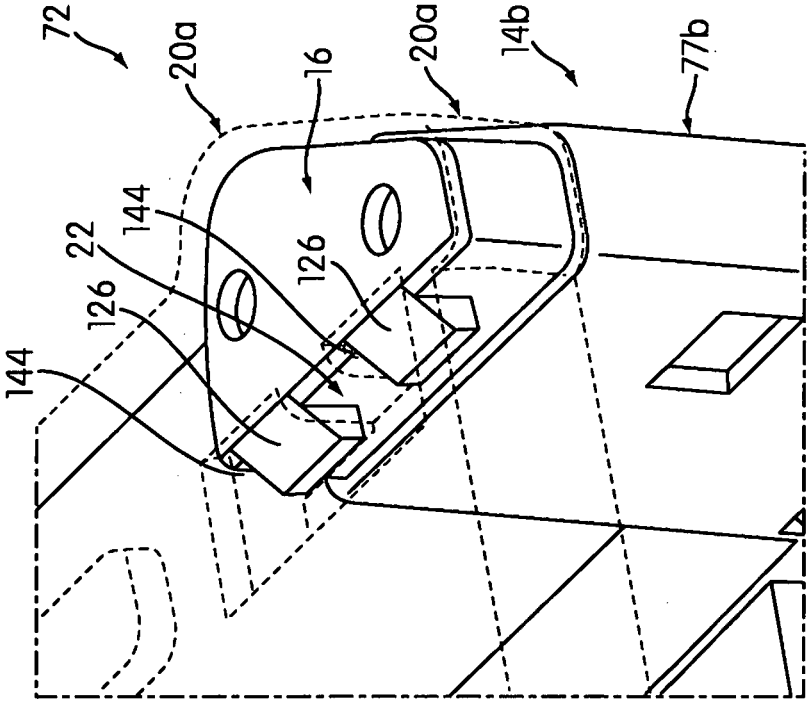
72
20a
16
20a
14b
77b
144
22
126
126
144

FIG. 9c

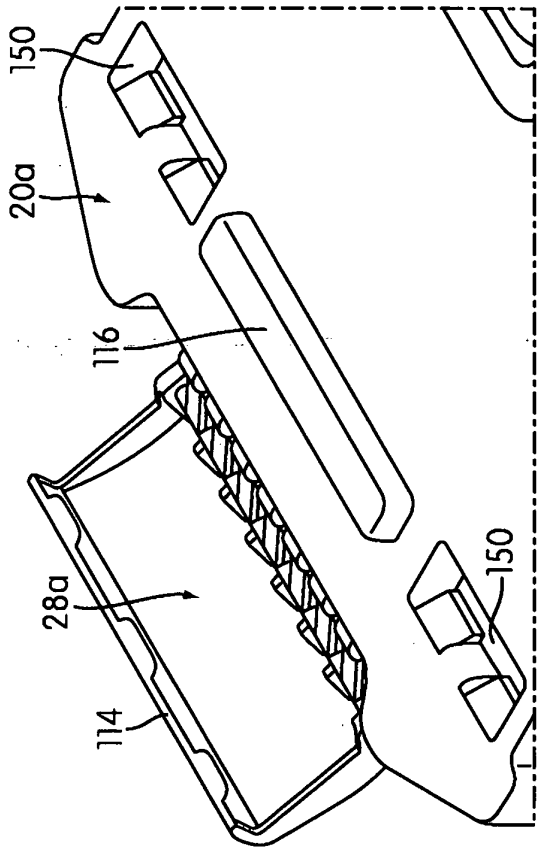

FIG. 11b

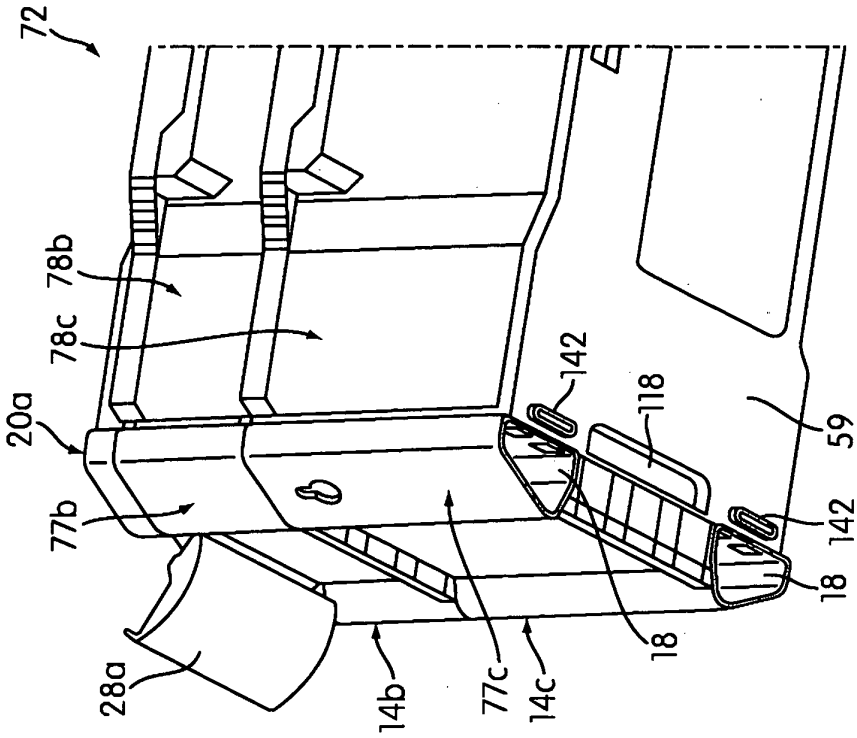

FIG. 11a

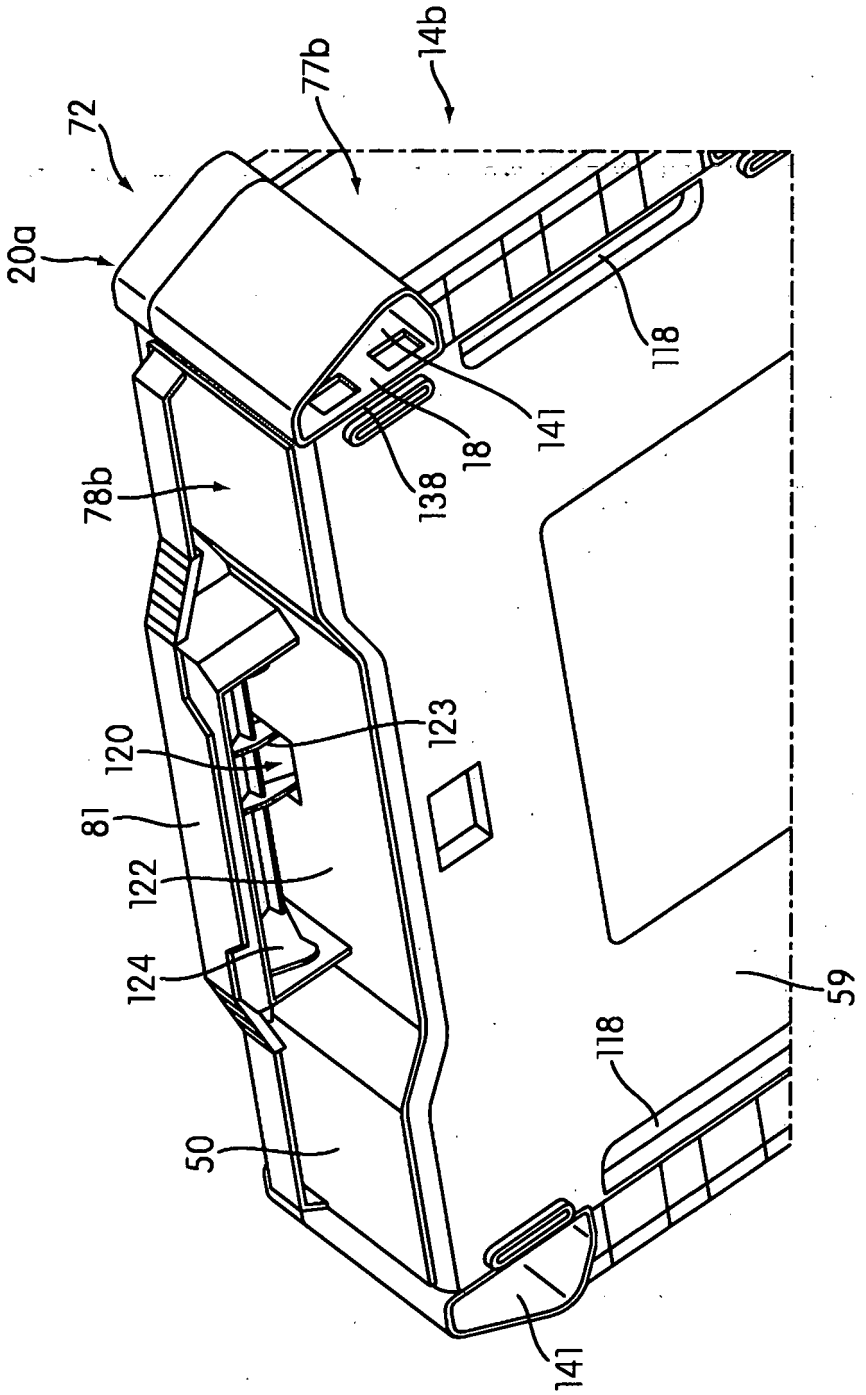

FIG. 12

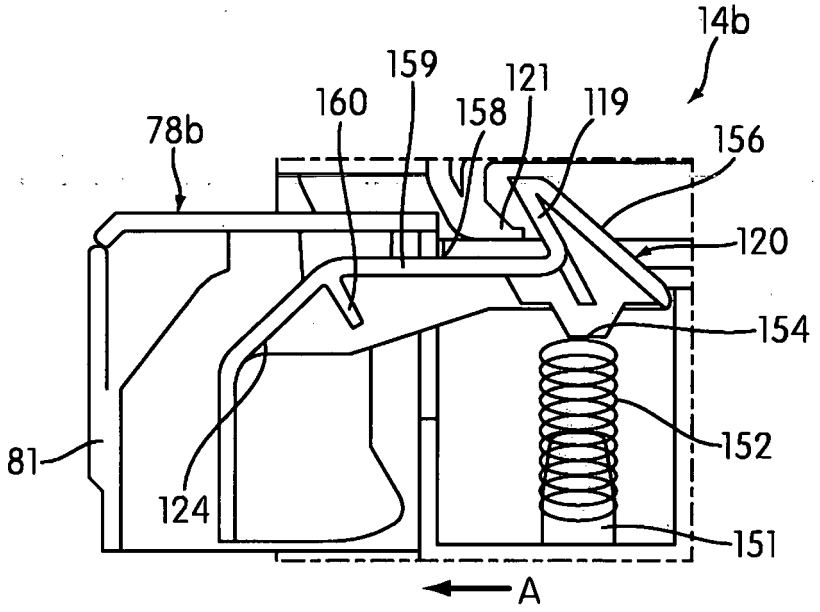

FIG. 13a

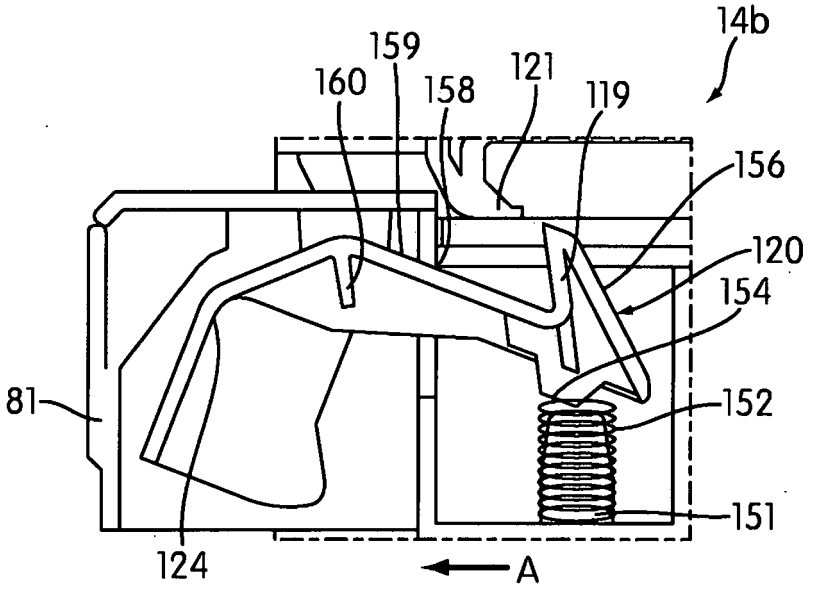

FIG. 13b

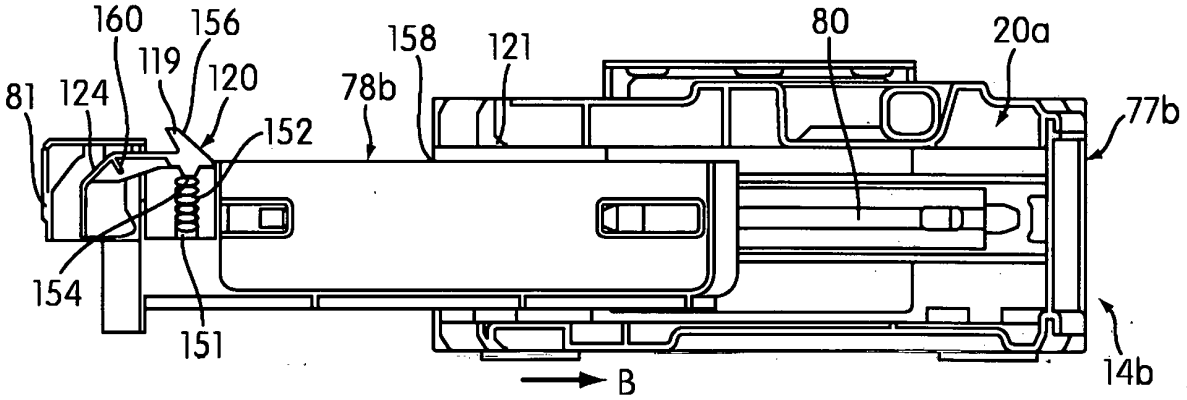

FIG. 14a

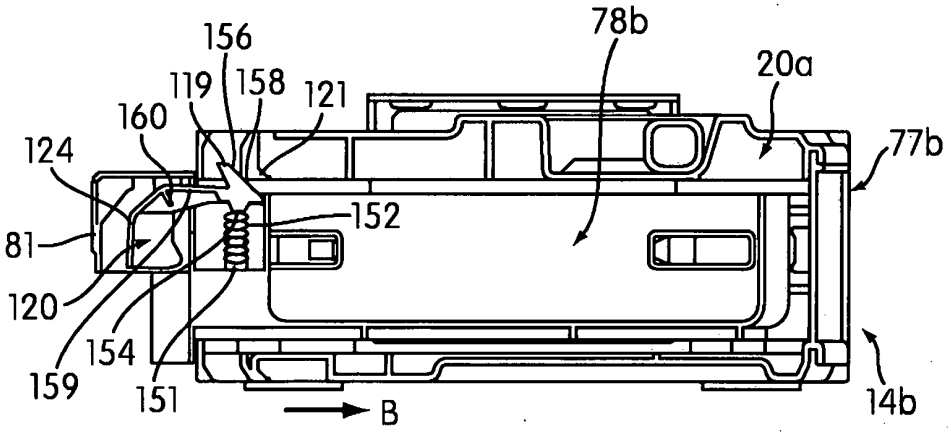

FIG. 14b

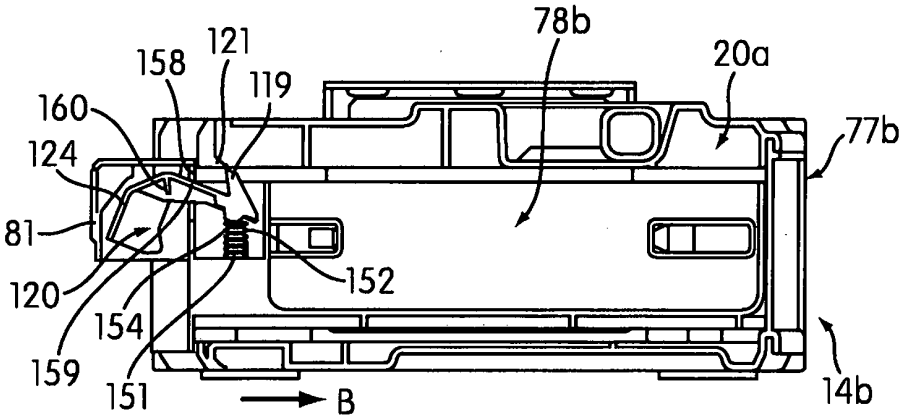

FIG. 14c

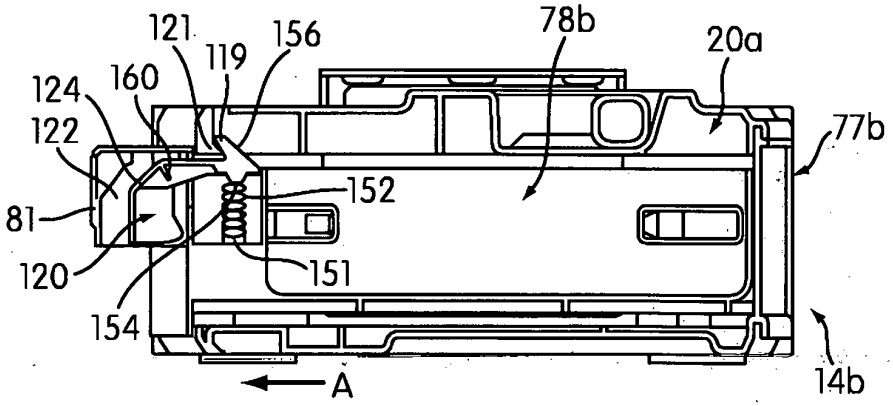

FIG. 15a

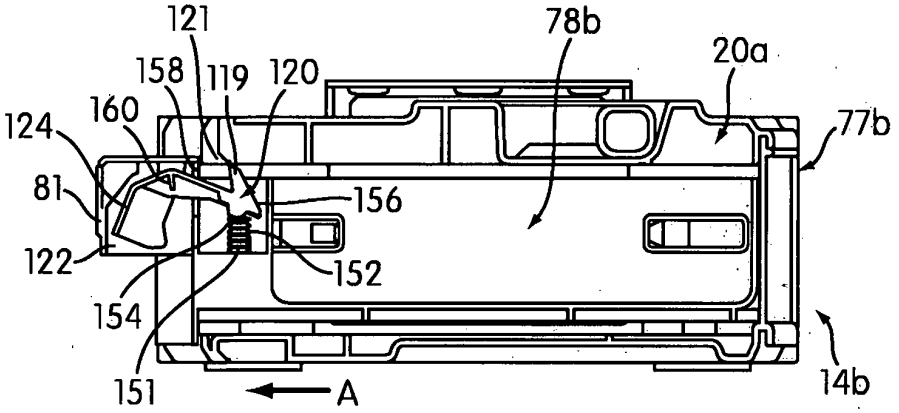

FIG. 15b

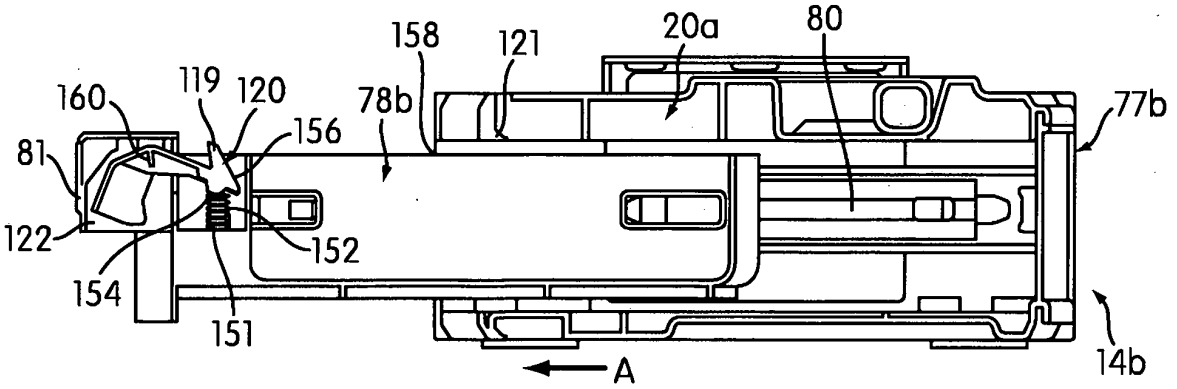

FIG. 15c

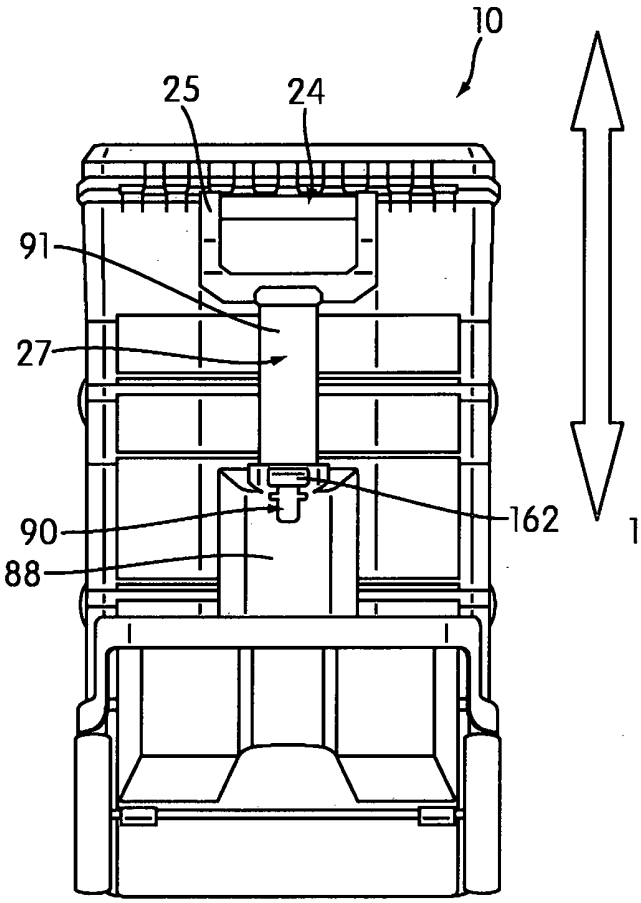

FIG. 16a

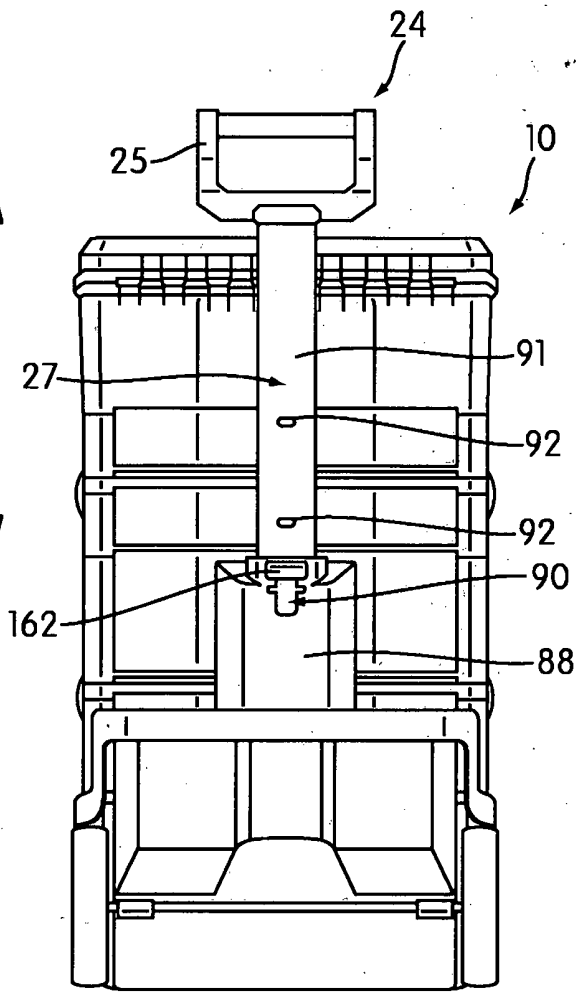

FIG. 16b

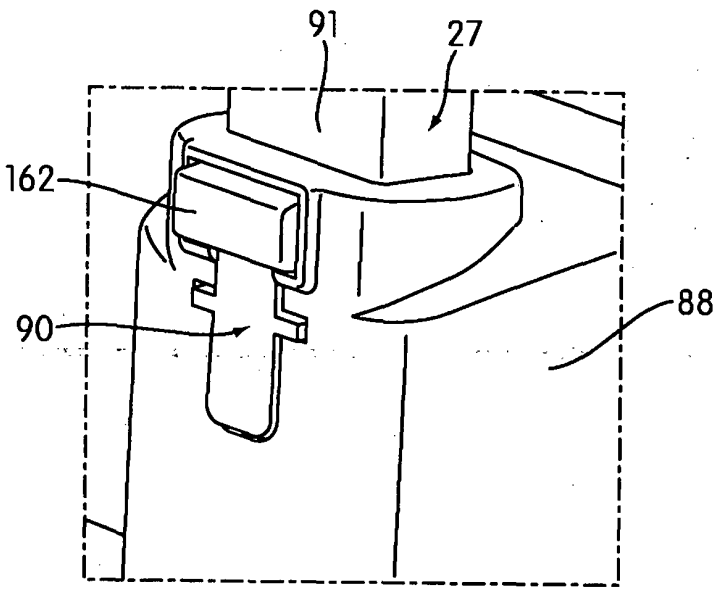

FIG. 17

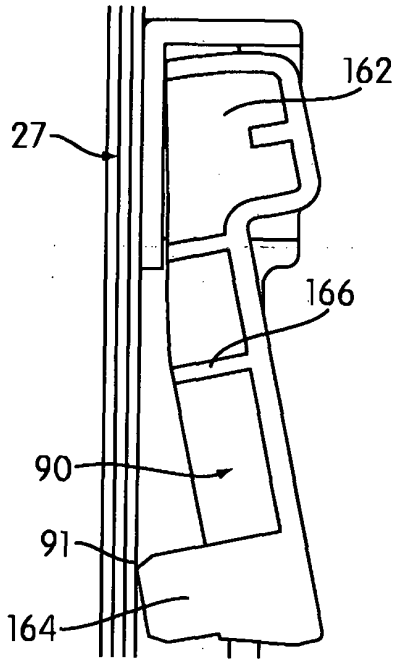

FIG. 18

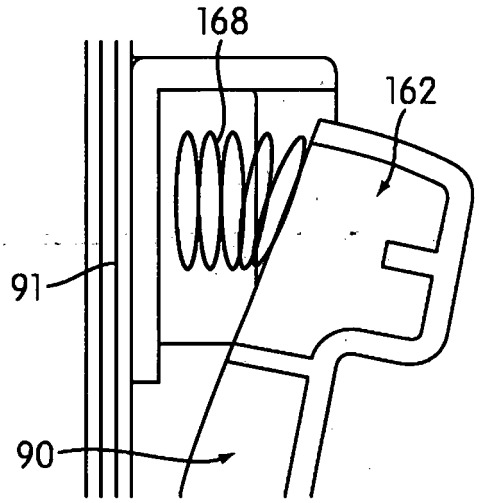

FIG. 19a

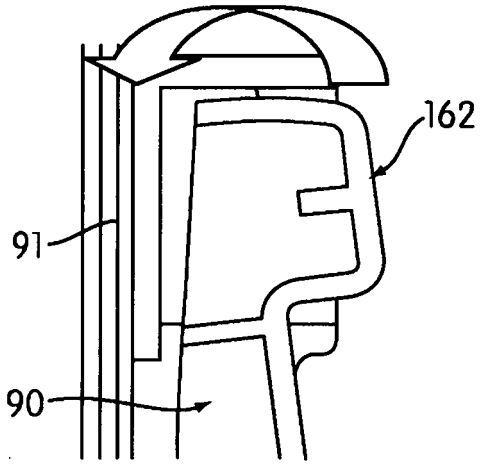

FIG. 19b

REFERENCES CITED IN THE DESCRIPTION

This list of references cited by the applicant is for the reader's convenience only. It does not form part of the European patent document. Even though great care has been taken in compiling the references, errors or omissions cannot be excluded and the EPO disclaims all liability in this regard.

Patent documents cited in the description

- US 2002030425 A **[0002]**

Klein Tools Ex. 1026, Page 37 of 37