UNITED STATES PATENT AND TRADEMARK OFFICE

BEFORE THE PATENT TRIAL AND APPEAL BOARD

SAMSUNG ELECTRONICS CO., LTD. AND
SAMSUNG ELECTRONICS AMERICA, INC.

Petitioners,

v.

HARBOR ISLAND DYNAMIC, LLC

Patent Owner.

Patent No. 9,147,609
Filing Date: March 8, 2012
Issue Date: September 29, 2015

Inventor: Hady Jebory and David J. Howard
Title: THROUGH SILICON VIA STRUCTURE METHOD OF FORMATION, AND INTEGRATION IN SEMICONDUCTOR SUBSTRATE

PATENT OWNER'S REQUEST FOR DIRECTOR REVIEW

Case No. IPR2024-01404

TABLE OF CONTENTS

Page(s)

I. INTRODUCTION 1

II. BACKGROUND 2

III. LEGAL STANDARD 6

IV. DISCUSSION 7

A. The Panel Abused its Discretion by Failing to Credit or Cite to Patent Owner's Evidence Regarding Voids 7

B. The Panel Abused its Discretion by Failing to Construe a Disputed Claim Term 9

C. The Panel Created "Modifications" to the Prior Art Not Present in the Petition 11

V. CONCLUSION 13

TABLE OF AUTHORITIES

Page(s)

Cases

Alacritech, Inc. v. Intel Corp.,
966 F.3d 1367 (Fed. Cir. 2020) 8

Bilstad v. Wakalopulos,
386 F.3d 1116 (Fed. Cir. 2004) 6

Dell Inc. v. Acceleron, LLC,
818 F.3d 1293 (Fed. Cir. 2016) 12

Intelligent Bio-Sys., Inc. v. Illumina Cambridge Ltd.,
821 F.3d 1359 (Fed. Cir. 2016) 6

Koninklijke Philips N.V. v. Google LLC,
948 F.3d 1330 (Fed. Cir. 2020) 13

In re NuVasive, Inc.,
842 F.3d 1376 (Fed. Cir. 2016) 8

O2Micro Int'l, Ltd. v. Beyond Innovation Tech. Co.,
521 F.3d 1351 (Fed. Cir. 2008) 10

Personal Web Techs, LLC v. Apple, Inc.,
848 F.3d 987 (Fed. Cir. 2017) 10

Qualcomm Inc. v. Intel Corp.,
6 F.4th 1256 (Fed. Cir. 2021) 12

Realtime Data, LLC v. Iancu,
912 F.3d 1368 (Fed. Cir. 2019) 9

Sirona Dental Sys. GmbH v. Institut Straumann AG,
892 F.3d 1349 (Fed. Cir. 2018) 13

Ultratec, Inc. v. CaptionCall, LLC,
872 F.3d 1267 (Fed. Cir. 2017) 9

United States v. Arthrex, Inc.,
141 S. Ct. 1970 (2021) 6

Statutes

35 U.S.C. § 135 6

35 U.S.C. § 311 6

35 U.S.C. § 318 6

35 U.S.C. § 321 6

35 U.S.C. § 328 6

I. INTRODUCTION

This is the second Request for Director Review in this proceeding. Patent Owner requested Director Review of the Institution Decision based on the Panel's failure to properly apply the *Fintiv* factors, which improperly discounted that the trial date in the underlying litigation was, at the time the Petition was filed, four months before the proposed Final Written Decision date. That Request was denied. Paper 14.

After conducting a full (and unnecessary) proceeding regarding the validity of the '609 Patent, despite the fact that it issued in 2012 and therefore the Patent Owner has settled expectations of its validity, the Panel invalidated all Challenged Claims in a Final Written Decision ("FWD"). The Grounds presented by the Petition each demonstrably fail to show the invalidity of the Challenged Claims, and the Panel abused its discretion by failing to construe a disputed claim term, failing to account for a key admission by Petitioner's expert, failing to credit or even cite to key evidence submitted by Patent Owner that undermines Petitioner's fundamental logical assumption, and finding purported "motivations" to modify the *Cooney* reference where no such modifications were proposed by Petitioner at any stage of the proceeding. The Panel also failed to construe a disputed claim term which is material to patentability.

II. BACKGROUND

The ’609 Patent describes and claims a through-silicon via (“TSV”) used in semiconductor devices that include pinched off regions and a hollow center, as shown below in Figure 4:

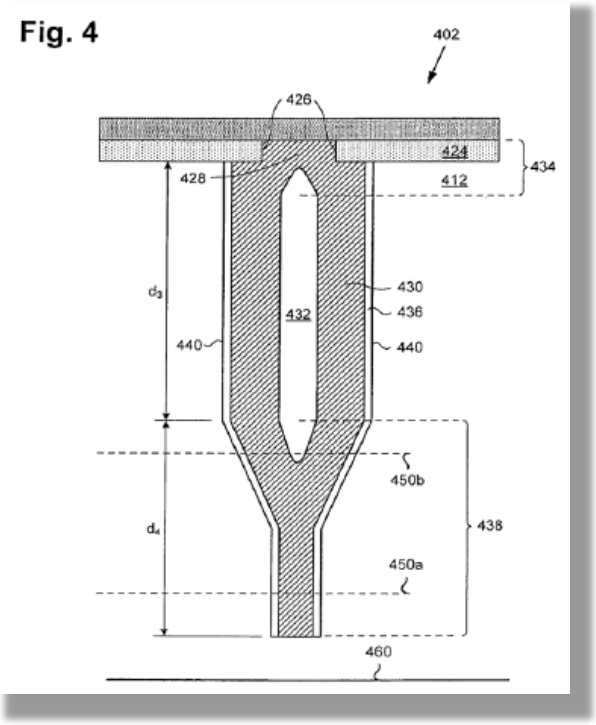

Paper 17 (“POR”), 3 (citing Ex. 1001, Abstract, 1:54-59, 4:9-15, 4:47-59). According to the ’609 Patent, these features provide significant advantages over the prior art, including reducing the TSV’s inductance, and reducing thermal and mechanical stresses. *Id.* (citing Ex. 1001, 4:60-5:2).

Each of the Challenged Claims requires a plurality of through-silicon vias that have “a hollow center [] to reduce thermal stress in said semiconductor substrate.” POR at 20. This claim element was the subject of multiple disputes in this

proceeding.

Because the primary prior art reference, *Cooney*, does not disclose the function or purpose of its "optional void," Petitioner first attempted to remove the so-called "functional limitations" from the claims via claim construction. Pet. at 20. Patent Owner disputed whether the claimed reduction of thermal stress was a functional limitation, arguing that because not all hollow centers and not all configurations of vias reduce thermal stress, the claim therefore recites a structural limitation. Under Patent Owner's construction, the hollow center must cause a reduction in thermal stress to be within the scope of the claims. POR, at 9-16. The Final Written Decision, however, did not construe this term, merely holding that in the event the "functional limitations" are given no patentable weight, the Challenged Claims are all anticipated by *Cooney*, and if they are given patentable weight, they are all obvious over *Cooney*. Paper 32 ("FWD") at 10. But the Board significantly erred in the obviousness analysis, shown below, creating a need to resolve the dispute over the functional limitations.

Petitioner's obviousness challenge to the '609 Patent (labeled Ground 1B in the Petition) is based upon a combination of *Cooney* with the knowledge of the person of ordinary skill in the art. Pet. at 21-22. This knowledge, confirmed by Petitioner's expert, is that all voids in TSV's reduce thermal stress. *Id.* ("[i]n view of the well-known thermal stress relieving behavior of voids in TSVs . . . a POSITA

would have found it obvious to include a void enclosed in the conductor layer in *Cooney's* TSV to cause a reduction in the thermal stress in the surrounding substrate."). The Petition relies on several prior art references as allegedly evidencing the knowledge of the POSITA, such as *Pogge* and *Edelstein*, without ever arguing that these references are part of an obviousness combination. *Id.* The Petition nowhere mentions any argument based on inherency, and nowhere mentions that a POSITA would be motivated to *modify* the void in *Cooney* in any way in order to make it reduce thermal stress.

The problem with Petitioner's obviousness challenge is that this fundamental assumption that all voids reduce thermal stress is flatly wrong. Patent Owner submitted significant evidence showing that while some voids reduce thermal stress, the POSITA would have known that they would need to be specifically designed to do so and, in some instances, the presence of a void may increase thermal stress. A reference relied upon by Petitioner, *Birner*, provides a discussion regarding how to select the size and shape of the fill material in order to create a void that reduces thermal stress. POR at 23-24 (citing Ex. 1022 ¶ [0038]). And Patent Owner submitted additional extrinsic evidence, *Kinoshita*, which shows unequivocally that the presence of a void actually *increases* thermal stress in certain situations. *Id.* at 24-27 (citing Ex. 2008). Because the Petition's fundamental assumption regarding the knowledge of a POSITA is wrong, and because the Petition never states or

suggests that one could modify the "optional void" in *Cooney* in any way to ensure that it reduces thermal stress in the substrate, the Petition's obviousness challenge must fail.

Counsel for Petitioner explicitly confirmed at the oral hearing that "[w]e're not suggesting structural modifications to the void in Cooney." Paper 31, 13:1-2. But the Final Written Decision relied on "modifications"—never proposed or described by Petitioner—to the prior art in order to support its results-driven analysis, without even mentioning or analyzing a Patent Owner's contrary evidence. FWD, at 33-34 ("One of Ordinary Skill in the Art Would have made the Proposed Modification"; "one of ordinary skill in the art would have understood that stress-relieving characteristics in Pogge would have been manifested in Cooney's void."). The FWD repeatedly refers to "Petitioner's Proposed Modifications" to the prior art, and manufactures an obviousness combination that apparently modifies *Cooney* in such a way to make its optional void reduce thermal stress using the teachings in *Pogge* and *Edelstein*, when no such combination was ever presented to the Board. *Id.* at 34 ("we further agree with Petitioner's declarant that one of ordinary skill in the art 'would have understood that voids in TSVs like those of *Edelstein* or *Cooney* would reduce the amount of thermal stress in the substrate generated due to the differences in coefficient of thermal expansion of materials like the conductive filler and the substrate.'"). The FWD does not discuss or mention Patent Owner's

evidence that all such voids do not decrease thermal stress in the substrate.

III. LEGAL STANDARD

The Director "may review final PTAB decisions and . . . issue decisions . . . on behalf of the Board." *United States v. Arthrex, Inc.*, 141 S. Ct. 1970, 1987 (2021). "Requests for Director Review of a Board's final decision under 35 U.S.C. §§ 135, 318, or 328, decisions granting rehearing of such a decision, or any other decision concluding a proceeding brought under 35 U.S.C. §§ 135, 311, or 321, shall be limited to decisions presenting (a) an abuse of discretion, (b) important issues of law or policy, (c) erroneous findings of material fact, or (d) erroneous conclusions of law." *See* USPTO, Revised Interim Director Review Process at 2.B, Availability of Director Review: AIA Trial Proceedings (last modified March 18, 2025), https://www.uspto.gov/patents/ptab/decisions/director-review-process. "'An abuse of discretion is found if [a] decision: (1) is clearly unreasonable, arbitrary, or fanciful; (2) is based on an erroneous conclusion of law; (3) rests on clearly erroneous fact finding; or (4) involves a record that contains no evidence on which the Board could rationally base its decision.'" *Intelligent Bio-Sys., Inc. v. Illumina Cambridge Ltd.*, 821 F.3d 1359, 1367 (Fed. Cir. 2016) (quoting *Bilstad v. Wakalopulos*, 386 F.3d 1116, 1121 (Fed. Cir. 2004) (citations omitted)).

IV. DISCUSSION

Patent Owner respectfully requests that the Director reverse the FWD because the Board abused its discretion.

A. The Panel Abused its Discretion by Failing to Credit or Cite to Patent Owner's Evidence Regarding Voids

Petitioner's fundamental assumption regarding the knowledge of a person of ordinary skill in the art—that all voids necessarily reduce thermal stress—is manifestly wrong. This should have ended the challenge, as it could no longer maintain its obviousness argument nor its claim construction argument that certain claim elements it deemed unimportant could be ignored. Rather than find for Patent Owner, the Panel ignored the evidence and created a new obviousness combination that was not presented in the Petition. This was reversible error.

Patent Owner presented expert testimony as well as two references, *Birner* and *Kinoshita*, showing that voids must be specifically designed to decrease thermal stress, and in some instances may actually increase thermal stress in a substrate. POR at 22-28. Thus, Petitioner's statement that the knowledge of a POSITA was that all voids decrease thermal stress was *wrong*. With this purported "knowledge" undermined, the Panel merely backfilled the missing knowledge of a POSITA with the disclosures of other prior art references, which were nowhere presented as part of any obviousness combination. FWD at 33-36. The references cited by Patent Owner undermining Petitioner's incorrect statement about the knowledge of a

POSITA were not even cited in the FWD, except where mooting a motion to exclude where the Panel stated "we do not need to rely on these exhibits." *Id.* at 6. The Federal Circuit has repeatedly held that merely summarizing and adopting a petitioner's arguments, without providing reasoned explanations for crediting those arguments over the patent owner's evidence, violates the APA. *In re NuVasive, Inc.*, 842 F.3d 1376, 1382-83 (Fed. Cir. 2016); *Alacritech, Inc. v. Intel Corp.*, 966 F.3d 1367, 1372 (Fed. Cir. 2020) ("But our precedent is clear: under the APA, '[o]ur review of a patentability determination is confined to 'the grounds upon which the Board actually relied.'' And although our review under the APA is deferential, that 'does not relieve the agency of its obligation to develop an evidentiary basis for its findings.'") (internal citations omitted). That happened here, where the Panel adopted Petitioner's assertion that all voids reduce thermal stress while ignoring Patent Owner's unrebutted evidence to the contrary.

The failure to credit (or even discuss) this evidence and related arguments was an abuse of discretion, and any conclusion reached by the Panel regarding the knowledge of a POSITA that is not informed by this evidence is necessarily also an error of fact. The FWD merely states that "Petitioner's proposed modification does not depend on all voids reducing thermal stress." FWD at 35 (citing Pet. Reply 15). But this statement is also wrong, as confirmed by the Petition itself. Pet. at 21-22. On this basis alone, the FWD should be reversed, and judgment should be entered

that Petitioner has not met its burden to show that the Challenged Claims are obvious over *Cooney* in combination with the knowledge of a POSITA.

Where, as here, the Board's findings rest on a factual premise that Patent Owner's evidence directly contradicts, the failure to address that evidence is an abuse of discretion. *See Ultratec, Inc. v. CaptionCall, LLC*, 872 F.3d 1267, 1272-73 (Fed. Cir. 2017) ("The Board abused its discretion when it refused to admit and consider Mr. Occhiogrosso's trial testimony and when it refused to explain its decision."). Patent Owner's evidence (that voids must be specifically designed to reduce thermal stress and may in fact increase it) goes to the heart of the Board's obviousness analysis and cannot simply be ignored.

B. The Panel Abused its Discretion by Failing to Construe a Disputed Claim Term

Petitioner, Patent Owner, and the Panel all agree that *Cooney* does not explicitly disclose a void for decreasing thermal stress in the substrate, nor does the Petition present any inherency argument. The only basis for the anticipation finding (Ground 1A) is, therefore, Petitioner's claim construction position that the so-called "functional limitations" in the claims should be given no patentable weight. FWD at 10. Because the obviousness analysis is fundamentally flawed and must be overturned, this claim construction dispute must be addressed. *Realtime Data, LLC v. Iancu*, 912 F.3d 1368, 1375 (Fed. Cir. 2019). Even absent the errors in the

obviousness analysis, the Panel was still required to decide the claim construction dispute. *O2Micro Int'l, Ltd. v. Beyond Innovation Tech. Co.*, 521 F.3d 1351, 1359 (Fed. Cir. 2008). The Board's failure to conduct claim construction is reversible error, for the additional reason that it frustrates the review process. *Personal Web Techs, LLC v. Apple, Inc.*, 848 F.3d 987, 992-993 (Fed. Cir. 2017) (noting that the APA and Supreme Court requires an agency to explain the rationale for its decisions with sufficient detail to enable judicial review).

The Director need not remand the claim construction issue to the Board, because Petitioner's claim construction position is based upon the same flawed assumptions as its obviousness analysis. Petitioner's claim construction position is merely that, because all voids reduce thermal stress, this claim language "states the use of or explanation for the hollow center and should be entitled to no patentable weight over the prior art." Pet. at 20. But, as shown above, because not all hollow centers and not all configurations of vias reduce thermal stress in all semiconductor substrates, this is not a statement of intended or preferred uses. POR at 13 (collecting cases). The claim language requiring a void that reduces thermal stress is clear in view of the actual knowledge of a POSITA, overlooked by the Panel, that would require such a void to be specifically designed in order to reduce thermal stress. *Id.* at 9-16. Therefore, the Director should issue a claim construction that this disputed

term is entitled to patentable weight, and reverse the Panel's decision that *Cooney* anticipates the Challenged Claims.

C. The Panel Created "Modifications" to the Prior Art Not Present in the Petition

Petitioner explicitly disclaimed any argument based upon modifications to the void in *Cooney*. Pet. at 21-22, Paper 31, 13:1-2. ("We're not suggesting structural modifications to the void in Cooney."). Yet the FWD repeatedly refers to "modifications" to *Cooney*, none of which were presented in the Petition or any other paper, and which Patent Owner had no ability to rebut. *See, e.g.*, FWD at 29 ("Petitioner's Proposed Modifications"); at 33 ("Petitioner Shows that One of Ordinary Skill in the Art Would have made the Proposed Modification"); at 35 ("Petitioner proposes to include Cooney's optional void 25 to reduce thermal stress, and Petitioner's proposed modification does not depend on all voids reducing thermal stress."); at 36 ("Based on the full record, Petitioner persuades us, and we determine, that *one of ordinary skill in the art would have modified Cooney* to include a void 'to reduce thermal stress in said semiconductor substrate' with a reasonable expectation of success.") (emphasis added); at 37 ("Based on the full record, Petitioner persuades us, and we determine, that one of ordinary skill in the art would have modified Cooney to include a void 'to provide space for said conductive filler to expand inward' with a reasonable expectation of success.").

Creating these "modifications" to the prior art was necessary for the Panel to find that *Cooney* renders the claims obvious, because the "knowledge of a POSITA" upon which the Petition was based is incorrect, and therefore cannot support an invalidity finding.

In creating new "modifications" to the prior art in the FWD, the Board's decision violated Patent Owner's due process rights and the Administrative Procedure Act, and should be vacated. *Qualcomm Inc. v. Intel Corp.*, 6 F.4th 1256, 1262 (Fed. Cir. 2021); *Dell Inc. v. Acceleron, LLC*, 818 F.3d 1293, 1301 (Fed. Cir. 2016) (vacating the Board's cancellation of claims based on identification of structures that met a claim element for the first time at the oral hearing.). Patent Owner had no chance to address any such modifications because, as confirmed by Petitioner's counsel, no such modifications to the void in *Cooney* were briefed or put before the Board in any respect. Had Petitioner timely presented arguments that the void in *Cooney* could or should be modified so as to reduce thermal stress in the substrate, Patent Owner would have had the opportunity to present evidence regarding the presented modifications. But Petitioner chose instead to rely upon a general "knowledge of a POSITA" that ***all*** voids reduce thermal stress, which is demonstrably false.

In addition to violating the Constitution and the APA, the new modifications also violated Federal Circuit case law by deciding a ground not raised in the Petition.

Koninklijke Philips N.V. v. Google LLC, 948 F.3d 1330, 1336 (Fed. Cir. 2020) ("Although the Board is not limited by the exact language of the petition, *see, e.g.*, *Sirona Dental Sys. GmbH v. Institut Straumann AG*, 892 F.3d 1349, 1356 (Fed. Cir. 2018), the Board does not 'enjoy[ ] a license to depart from the petition and institute a *different* inter partes review of his own design.'"). The Board violated Patent Owner's due process, violated the APA, and violated Federal Circuit case law by creating modifications to the prior art where none were presented, and its Judgment should therefore be reversed.

V. CONCLUSION

For the foregoing reasons, Patent Owner respectfully requests Director Review of the Final Written Decision, and a reversal of the Judgment cancelling all Challenged Claims.

Respectfully submitted,

Dated: March 25, 2026 By: /*Joseph M. Mercadante* /

Joseph M. Mercadante (Reg. No. 64,077)
Lead Counsel for Patent Owner
Fabricant, Rubino & Lambrianakos LLP
411 Theodore Fremd Avenue,
Suite 206 South
Rye, New York 10580
Tel. 212-257-5797
Fax. 212-257-5796
Email: jmercadante@frlip.com

CERTIFICATE OF SERVICE

In accordance with 37 C.F.R. §§42.6(e) and 42.105, the undersigned certifies that on March 25, 2026, a complete and entire copy of the foregoing was served on Petitioner's counsel of record as follows:

Joshua L. Goldberg
Email: joshua.goldberg@finnegan.com
Alexander E. Harding
Email: alexander.harding@finnegan.com
Chen Zang
Email: chen.zang@finnegan.com
FINNEGAN, HENDERSON, FARABOW, GARRETT & DUNNER, LLP
901 New York Avenue NW
Washington, DC 20001-4413

Abhay A. Watwe
Email: abhay.watwe@finnegan.com
Biju I. Chandran
Email: biju.chandran@finnegan.com
FINNEGAN, HENDERSON, FARABOW, GARRETT & DUNNER, LLP
1875 Explorer Street, Suite 800
Reston, VA 20190-6023

Shawn S. Chang
Email: shawn.chang@finnegan.com
FINNEGAN, HENDERSON, FARABOW, GARRETT & DUNNER, LLP
271 17th Street, NW, Suite 1400
Atlanta, GA, 30363-6209

Attorneys for Samsung Electronics Co., Ltd.; Samsung Electronics America, Inc.

March 25, 2026 By: /*Joseph M. Mercadante* /
Joseph M. Mercadante (Reg. No. 64,077)
Lead Counsel for Patent Owner