UNITED STATES PATENT AND TRADEMARK OFFICE

BEFORE THE PATENT TRIAL AND APPEAL BOARD

R.J. REYNOLDS VAPOR COMPANY,

Petitioner

v.

FONTEM HOLDINGS 1 B.V.,

Patent Owner

U.S. Patent 8,393,331
Issue Date: March 12, 2013
Title: Electronic Atomization Cigarette

Inter Partes Review No. IPR2018-00627

PETITION FOR *INTER PARTES* REVIEW OF U.S. PATENT NO. 8,393,331 PURSUANT TO 35 U.S.C. §§ 311-319 AND 37 C.F.R. § 42

TABLE OF CONTENTS

Page

I. INTRODUCTION 1

II. MANDATORY NOTICES UNDER 37 C.F.R. § 42.8 1

A. Notice of Real Party-in-Interest 1

B. Notice of Related Matters 2

1. Related Litigations 3

2. Related Proceedings Before the Board 4

3. Pending Patent Applications 6

C. Lead and Back-Up Counsel 7

D. Service Information 8

III. GROUNDS FOR STANDING 8

IV. IDENTIFICATION OF CHALLENGE AND STATEMENT OF THE PRECISE RELIEF REQUESTED 8

V. THRESHOLD REQUIREMENT FOR *INTER PARTES* REVIEW 12

VI. STATEMENT OF REASONS FOR THE RELIEF REQUESTED 12

A. Background Information for the 331 Patent 12

B. Person Having Ordinary Skill in the Art ("PHOSITA") 14

C. Claim Construction 15

D. Description of the Prior Art 22

1. Takeuchi (Ex. 1003) 22

E. GROUND 1: CLAIMS 1-2 OF THE 331 PATENT ARE UNPATENTABLE AS ANTICIPATED BY TAKEUCHI 25

1. Claim 1 Is Anticipated by Takeuchi 26

a. "An electronic cigarette comprising" 26

b. "a housing" 27

c. "a mouth piece on the housing" 28

d. "an LED at a first end of the housing" 29

e. "an air inlet leading into the housing".....31

f. "a battery within the housing".....33

g. "an electronic circuit board within the housing".....34

h. "a sensor within the housing".....37

i. "an atomizer within the housing".....40

j. "a stream passage within the housing leading from the inlet to the atomizer".....45

k. "a cavity arranged in the atomizer".....47

l. "a liquid-supply within the housing".....52

m. "an aerosol passage leading from the atomizer to the mouthpiece".....54

n. "with the liquid-supply in physical contact with the atomizer".....56

o. "a heating element within the cavity" 62

2. Claim 2 Is Anticipated by Takeuchi 67

a. "An electronic cigarette, comprising" 67

b. "a housing" 67

c. "a mouth piece on the housing".....67

d. "an LED at a first end of the housing" 67

e. "an air inlet for providing air into the housing".....67

f. "a battery and a sensor electrically connected to an electronic circuit board within the housing, with the sensor in a stream passage in the housing".....68

g. "an atomizer within the housing, with the atomizer having a heating element within a cavity, and with the atomizer making contact with a liquid-supply, to provide for movement of liquid to the atomizer via capillary action".....70

h. "an aerosol passage extending from the atomizer to the mouthpiece" 72

F. GROUND 2: CLAIMS 1-2 OF THE 331 PATENT ARE UNPATENTABLE AS OBVIOUS OVER TAKEUCHI 72

VII. CONCLUSION 73

TABLE OF AUTHORITIES

CASES

Cascades Canada ULC v. SCA Hygiene Prods AB,
IPR2017-01921 (P.T.A.B. Feb. 5, 2018).....10

Catalina Mktg. Int'l, Inc. v. Coolsavings.com, Inc.,
289 F.3d 801 (Fed.Cir.2002).....20

Cisco Sys. et al v. Capella Photonics, Inc.,
IPR2014-01276 (P.T.A.B. Feb. 17, 2016).....21

Cuozzo Speed Techs. v. Lee,
579 U. S. ____ (2016).....15

Donghee America, Inc. v. Plastic Omnium Advanced Innovation and Research,
IPR2017-01654 (PTAB, petition filed June 21, 2017).....11

Google Inc. v. Visual Real Estate, Inc.,
IPR2014-01339 (P.T.A.B. Jan. 25, 2016).....21

In re Cuozzo Speed Techs., LLC,
793 F.3d 1268 (Fed. Cir. 2015).....15

Limelight Networks, Inc. v. Mass. Inst. of Tech.,
IPR2017-00249 (P.T.A.B. May 18, 2017).....11

Macauto U.S.A. v. BOS GMBH & KG,
IPR2012-00004 (PTAB, petition filed Sept. 16, 2012).....12

Micron Tech., Inc. v. Bd. of Trs. of the Univ. of Ill.,
IPR2013-00005 (PTAB, petition filed Oct. 2, 2012).....12

Microsoft Corp. v. Parallel Networks Licensing, LLC,
IPR2015-00483 (P.T.A.B. Jul. 15, 2015).....11

R.J. Reynolds Vapor Company V. Fontem Holdings 1 B.V.,
IPR2016-01272 (P.T.A.B. Dec. 30, 2016).....21

RF Controls, LLC. v. A1 Packaging Solutions, Inc.
IPR2014-01536 (P.T.A.B. March 28, 2016).....21

Samsung Elec. Am. v. Uniloc,
IPR2017-01801 (P.T.A.B. Feb. 6, 2018).....10

STATUTES

35 U.S.C. § 102 ..... passim

35 U.S.C. § 103 ..... 1, 7, 8, 9

35 U.S.C. §§ 311-319 ..... 1, 2, 12

RULES

Patent Trial Practice Guide,
77 Fed. Reg. 48,756 (Aug. 14, 2012) (codified at 37 C.F.R. pt. 42) 2, 15

REGULATIONS

37 C.F.R. § 42 ..... 1, 8, 15

LIST OF EXHIBITS

Exhibit No.	Exhibit
1001	U.S. Pat. No. 8,393,331 ("331 patent")
1002	Expert Declaration of Robert Sturges, Ph.D.
1003	U.S. Pat. No. 6,155,268 ("Takeuchi")
1004	U.S. Pat. No. 5,743,251 ("Howell")
1005	U.S. Pat. No. 6,598,607 ("Adiga")
1006	U.S. Pat. No. 5,894,841 ("Voges")
1007	U.S. Pat. No. 4,990,939 ("Sekiya")
1008	U.S. Pat. No. 4,771,295 ("Baker")
1009	Institution Decision dated Feb. 19, 2015 (Paper 8), *NJOY, Inc. v. Fontem Holdings 1 B.V.*, IPR2014-01289 (P.T.A.B., petition filed Aug. 14, 2014)
1010	Termination Order dated Nov. 24, 2015 (Paper 39), *NJOY, Inc. v. Fontem Holdings 1 B.V.*, IPR2014-01289 (P.T.A.B., petition filed Aug. 14, 2014)
1011	Institution Decision dated Dec. 14, 2016 (Paper 11), *Nu Mark LLC v. Fontem Holdings 1 B.V.*, IPR2016-01299 (P.T.A.B., petition filed June 28, 2016)
1012	Termination Order dated Jan. 5, 2017 (Paper 16), *Nu Mark LLC v. Fontem Holdings 1 B.V.*, IPR2016-01299 (P.T.A.B., petition filed June 28, 2016)
1013	Institution Decision dated Dec. 29, 2016 (Paper 13), *Nu Mark LLC v. Fontem Holdings 1 B.V.*, IPR2016-01438 (P.T.A.B., petition filed July 14, 2016)
1014	Compilation Of The 331 Patent File History
1015	U.S. Pat. No. 5,703,633 ("Gehrer")
1016	U.S. Pat. No. 5,745,985 ("Ghosh")
1017	U.S. Pat. No. 4,208,005 ("Nate")
1018	U.S. Pat. No. 4,945,448 ("Bremenour")

1019	Excerpts from James W. Dally, *Packaging of Electronic Systems: A Mechanical Engineering Approach* (John Corrigan and John M. Morriss eds., 1990) ("Dally")
1020	U.S. Pat. No. 2,057,353 ("Whittemore")
1021	U.S. Pat. No. 3,200,819 ("Gilbert")
1022	U.S. Pat. No. 6,501,052 ("Cox 052")
1023	U.S. Pat. No. 6,234,167 ("Cox 167")
1024	U.S. Pat. No. 5,124,200 ("Mallonee")
1025	U.S. Pat. No. 4,797,692 ("Ims")
1026	U.S. Pat. No. 5,666,977 ("Higgins")
1027	EP Pat. App. Pub. No. EP 0 358 114 A2 ("Brooks 114")
1028	U.S. Pat. No. 7,284,424 ("Kanke")
1029	U.S. Pat. No. 5,224,265 ("Dux")
1030	U.S. Pat. No. 6,620,659 ("Emmma")
1031	U.S. Pat. No. 4,676,237 ("Wood")
1032	Chinese Utility Model Pub. No. 1233436A ("Hongbin") (including certified translation)
1033	Excerpts from *The Oxford American Dictionary and Thesaurus* (Ex. 2007), *Nu Mark LLC v. Fontem Holdings 1 B.V.*, IPR2016-01299 (P.T.A.B., petition filed June 28, 2016)
1034	Reserved
1035	Teleconference Transcript (Ex. 3001), *Nu Mark LLC v. Fontem Holdings 1 B.V.*, IPR2016-01299 (P.T.A.B., petition filed June 28, 2016)
1036	Patent Owner's Preliminary Response to Petition for *Inter Partes* Review dated Oct. 7, 2016 (Paper 8), *Nu Mark LLC v. Fontem Holdings 1 B.V.*, IPR2016-01299 (P.T.A.B., petition filed June 28, 2016)
1037	Excerpts from *Merriam-Webster's Collegiate Dictionary 11th ed*. (Ex. 2003), *Nu Mark LLC v. Fontem Holdings 1 B.V.*, IPR2016-01299 (P.T.A.B., petition filed June 28, 2016)

1038	Excerpts from *Webster's Unabridged Dictionary 2nd ed*. (Ex. 2030), *Nu Mark LLC v. Fontem Holdings 1 B.V.*, IPR2016-01299 (P.T.A.B., petition filed June 28, 2016)
1039	Institution Decision dated Feb. 6, 2018 (Paper 8), *Samsung Elecs. Am. v. Uniloc*, IPR2017-01801 (P.T.A.B., petition filed July 20, 2017)
1040	Institution Decision dated Feb. 5, 2018 (Paper 9), *Cascades Canada ULC v. SCA Hygiene Prods AB*, IPR2017-01921 (P.T.A.B., petition filed Aug. 7, 2017)
1041	Institution Decision dated Jan. 19, 2018 (Paper 9), *Donghee America, Inc. v. Plastic Omnium Advanced Innovation and Research*, IPR2017-01654 (P.T.A.B., petition filed June 21, 2017)
1042	Institution Decision dated May 18, 2017 (Paper 9), *Limelight Networks, Inc. v. Mass. Inst. of Tech.*, IPR2017-00249 (P.T.A.B., petition filed Nov. 11, 2016)
1043	Institution Decision dated July 15, 2015 (Paper 10), *Microsoft Corp. v. Parallel Networks Licensing, LLC*, IPR2015-00483 (P.T.A.B., petition filed Dec. 23, 2014)
1044	Institution Decision dated Mar. 13, 2013 (Paper 19), *Micron Tech., Inc. v. Bd. of Trs. of the Univ. of Ill.*, IPR2013-00005 (P.T.A.B., petition filed Oct. 2, 2012)
1045	Institution Decision dated Jan. 24, 2013 (Paper 18), *Macauto U.S.A. v. BOS GMBH & KG*, IPR2012-00004 (P.T.A.B., petition filed Sept. 16, 2012)
1046	Institution Decision dated Dec. 30, 2016 (Paper 11), *R.J. Reynolds Vapor Co. v. Fontem Holdings 1 B.V.*, IPR2016-01272 (P.T.A.B., petition filed July 2, 2016)
1047	Final Written Decision dated Jan. 25, 2016 (Paper 39), *Google, Inc. v. Visual Real Estate, Inc.*, IPR2014-01339 (P.T.A.B., petition filed Aug. 20, 2014)
1048	Final Written Decision dated Feb. 17, 2016 (Paper 40), *Cisco Sys., Inc., et al. v. Capella Photonics, Inc.*, IPR2014-01276 (P.T.A.B., petition filed Aug. 12, 2014)
1049	Final Written Decision dated Mar. 28, 2016 (Paper 20), *RF Controls, LLC v. A-1 Packaging Sols., Inc.*, IPR2014-01536 (P.T.A.B., petition filed Sept. 23, 2014)

I. INTRODUCTION

Pursuant to 35 U.S.C. §§ 311-319 and 37 C.F.R. § 42, R.J. Reynolds Vapor Company ("Petitioner") respectfully requests *Inter Partes* Review ("IPR") of claims 1-2 of U.S. Patent No. 8,393,331 to Hon, titled "Electronic Atomization Cigarette" ("331 patent," Ex. 1001). Patent Office records indicate that Fontem Holdings 1 B.V. is the patent owner ("PO"). Petitioner authorizes the Patent and Trademark Office to charge Deposit Account No. 23-1925 for the fees set forth in 37 C.F.R. § 42.15(a) for this IPR Petition, and authorizes payment of any additional fees to be charged to this Deposit Account.

This Petition demonstrates a reasonable likelihood that claims 1-2 of the 331 patent are unpatentable. As explained herein, claims 1-2 are unpatentable as anticipated under § 102 or obvious under § 103 based on U.S. Pat. No. 6,155,268 ("Takeuchi," Ex. 1003).

Accordingly, Petitioner respectfully requests that this petition be granted.

II. MANDATORY NOTICES UNDER 37 C.F.R. § 42.8

A. Notice of Real Party-in-Interest

For purposes of 35 U.S.C. § 312(a)(2) and 37 C.F.R. § 42.8(b)(1) only, Petitioner identifies the real-parties-in-interest as R.J. Reynolds Vapor Company, RAI Strategic Holdings, Inc., RAI Innovations Company (the direct parent company of R.J. Reynolds Vapor Company and RAI Strategic Holdings, Inc.), R.J.

Reynolds Tobacco Company, and RAI Services Company. Each of the foregoing entities is a direct or indirect wholly owned subsidiary of Reynolds American Inc. Although Petitioner does not believe that Reynolds American Inc. is a real party-in-interest (*see* Patent Trial Practice Guide, 77 Fed. Reg. 48,756, 48,759-60 (Aug. 14, 2012) (codified at 37 C.F.R. pt. 42)), Reynolds American Inc. and its wholly owned subsidiaries (direct and indirect) nevertheless agree to be bound by any final written decision in these proceedings to the same extent as a real party-in-interest. *See* 35 U.S.C. § 315(e).

B. Notice of Related Matters

Petitioner is not aware of any reexamination certificates or pending prosecution concerning the 331 patent. Petitioner is a defendant in the following litigation involving the 331 patent: *Fontem Ventures B.V. et al. v. R.J. Reynolds Vapor Company*, No. 1:17-cv-00175 (M.D.N.C., filed March 1, 2017) (consolidated with lead case 1:16-cv-01255 (M.D.N.C.)). Patent Owner has alleged that Reynolds infringes claims 1, 2, 4 and 5 of the 331 patent, as well as certain claims of U.S. Patent Nos. 8,375,957; 8,863,752; 9,364,027; 9,339,062; 9,326,550; 9,326,551; and 9,456,632. The above-referenced action is one of four related patent infringement actions filed by the Patent Owner against the Petitioner. In the related action, *Fontem Ventures B.V. et al. v. R.J. Reynolds Vapor Company*, No. 1:16-cv-01255 (M.D.N.C.) (filed as 2:16-cv-02286 (C.D. Cal., filed April 4,

2016)), the Patent Owner has asserted U.S. Patent Nos. 8,365,742; 8,490,628; 8,893,726; and 8,899,239. In another related action, *Fontem Ventures B.V. et al. v. R.J. Reynolds Vapor Company*, No. 1:16-cv-01257 (M.D.N.C.) (filed as 2:16-cv-03049 (C.D. Cal., filed May 3, 2016)), the Patent Owner has asserted U.S. Patent Nos. 9,326,548; and 9,326,549. In a third related action, *Fontem Ventures B.V. et al. v. R.J. Reynolds Vapor Company*, No. 1:16-cv-01258 (M.D.N.C.) (filed as 2:16-cv-04534 (C.D. Cal., filed June 22, 2016)), the Patent Owner has asserted U.S. Patent No. 9,370,205. In addition to the petitions for IPR noted below with respect to the 331 patent, the Petitioner has also filed petitions for IPR against the 742 patent (IPR2016-01268 and IPR2016-01532), the 726 patent (IPR2016-01270, IPR2017-01117 and IPR2017-01180), the 239 patent (IPR2016-01272 and IPR2017-01120), the 628 patent (IPR 2016-01527, IPR2017-01118 and IPR2017-01119), the 548 patent (IPR2016-01691 and IPR2016-01692), the 549 patent (IPR2016-01859, IPR2017-01318 and IPR2017-01319), and the 205 patent (IPR2017-01641 and IPR2017-01642).

In addition to the foregoing, the Petitioner is aware of the following additional matters involving or related to the 331 patent.

1. Related Litigations

The Patent Owner has asserted the 331 patent in the following terminated district court proceedings in which Reynolds was not and is not a party:

Case Name	Case Number	District	Filed
Fontem Ventures BV et al. v. NJOY, Inc.	2:14-cv-01645	C.D. Cal.	Mar. 5, 2014
Fontem Ventures BV et al. v. LOEC, Inc. et al.	2:14-cv-01648	C.D. Cal.	Mar. 5, 2014
Fontem Ventures BV et al. v. CB Distributors, Inc. et al.	2:14-cv-01649	C.D. Cal.	Mar. 5, 2014
Fontem Ventures BV et al. v. Vapor Corp.	2:14-cv-01650	C.D. Cal.	Mar. 5, 2014
Fontem Ventures BV et al. v. FIN Branding Group, LLC et al.	2:14-cv-01651	C.D. Cal.	Mar. 5, 2014
Fontem Ventures BV et al. v. Ballantyne Brands, LLC	2:14-cv-01652	C.D. Cal.	Mar. 5, 2014
Fontem Ventures BV et al. v. Spark Industries, LLC	2:14-cv-01653	C.D. Cal.	Mar. 5, 2014
Fontem Ventures BV et al. v. Logic Technology Development LLC	2:14-cv-01654	C.D. Cal.	Mar. 5, 2014
Fontem Ventures BV et al. v. VMR Products, LLC	2:14-cv-01655	C.D. Cal.	Mar. 5, 2014
Fontem Ventures BV et al. v. Nu Mark LLC	1:16-cv-01261	M.D.N.C. (filed as 2:16-cv-02291 (C.D. Cal.))	April 4, 2016

2. Related Proceedings Before the Board

The 331 patent was the subject of, or related to, the following petitions for IPR:

Case Name	Case Number	Filed
NJOY, Inc. v. Fontem Holdings 1 B.V. (U.S. Patent No. 8,393,331) (terminated)	IPR2014-01289	Aug. 14, 2014

Case Name	Case Number	Filed
NJOY, Inc. v. Fontem Holdings 1 B.V. (U.S. Pat. No. 8,490,628) (terminated)	IPR2014-01300	Aug. 15, 2014
NJOY, Inc. v. Fontem Holdings 1 B.V. (U.S. Pat. No. 8,893,726) (denied)	IPR2015-01302	May 29, 2015
Nu Mark LLC v. Fontem Holdings 1 B.V. (U.S. Pat. No. 8,490,628) (denied)	IPR2016-01283	Jun. 28, 2016
Nu Mark LLC v. Fontem Holdings 1 B.V. (U.S. Pat. No. 8,490,628) (denied)	IPR2016-01285	Jun. 28, 2016
Nu Mark LLC v. Fontem Holdings 1 B.V. (U.S. Pat. No. 8,893,726) (terminated)	IPR2016-01288	Jun. 28, 2016
Nu Mark LLC v. Fontem Holdings 1 B.V. (U.S. Pat. No. 8,893,726) (terminated)	IPR2016-01297	Jun. 28, 2016
Nu Mark LLC v. Fontem Holdings 1 B.V. (U.S. Pat. No. 8,393,331) (terminated)	IPR2016-01299	Jun. 28, 2016
R.J. Reynolds Vapor Company v. Fontem Holdings 1 B.V. (U.S. Pat. No. 8,893,726) (denied)	IPR2016-01270	Jul. 2, 2016
Nu Mark LLC v. Fontem Holdings 1 B.V. (U.S. Pat. No. 8,393,331) (denied)	IPR2016-01438	Jul. 14, 2016
R.J. Reynolds Vapor Company v. Fontem Holdings 1 B.V. (U.S. Pat. No. 8,490,628) (denied)	IPR2016-01527	Aug. 3, 2016
Nu Mark LLC v. Fontem Holdings 1 B.V. (U.S. Pat. No. 9,326,549) (terminated)	IPR2016-01664	Aug. 22, 2016
R.J. Reynolds Vapor Company v. Fontem Holdings 1 B.V. (U.S. Pat. No. 9,326,549) (denied)	IPR2016-01859	Sept. 23, 2016
R.J. Reynolds Vapor Company v. Fontem Holdings 1 B.V. (U.S. Pat. No. 8,893,726) (denied)	IPR2017-01117	Apr. 4, 2017
R.J. Reynolds Vapor Company v. Fontem Holdings 1 B.V. (U.S. Pat. No. 8,490,628) (denied)	IPR2017-01118	Apr. 4, 2017

Case Name	Case Number	Filed
R.J. Reynolds Vapor Company v. Fontem Holdings 1 B.V. (U.S. Pat. No. 8,490,628) (denied)	IPR2017-01119	Apr. 4, 2017
R.J. Reynolds Vapor Company v. Fontem Holdings 1 B.V. (U.S. Pat. No. 8,893,726) (denied)	IPR2017-01180	Apr. 4, 2017
R.J. Reynolds Vapor Company v. Fontem Holdings 1 B.V. (U.S. Pat. No. 9,326,549) (denied)	IPR2017-01318	May 1, 2017
R.J. Reynolds Vapor Company v. Fontem Holdings 1 B.V. (U.S. Pat. No. 9,326,549) (denied)	IPR2017-01319	May 3, 2017

3. Pending Patent Applications

The following pending patent applications are related to the 331 patent:

Serial No.	Filed
U.S. Patent Application No. 14/525,066, which claim the benefit of the 331 patent filing date	October 27, 2014
U.S. Patent Application No. 15/633,434, which claims the benefit of the 331 patent filing date	June 26, 2017

Prior NJOY And Nu Mark Petitions

In IPR2014-01289 listed above ("NJOY petition"), the Board instituted NJOY's petition for *inter partes* review of the 331 patent. The instituted grounds in NJOY's petition relied on Takeuchi under 35 U.S.C. § 103 for claims 1-2, and further in view of U.S. Pat. No. 5,743,251 ("Howell," Ex. 1004) or U.S. Pat. No. 6,598,607 ("Adiga," Ex. 1005), under 35 U.S.C. § 103 for claims 4-5. Ex. 1009 at

pp. 22-23. The proceeding was terminated on November 24, 2015, at the parties' request in view of an apparent settlement. Ex. 1010 at pp. 2-3.

In IPR2016-01299, listed above ("Nu Mark obviousness-based petition"), the Board instituted Nu Mark's petition for *inter partes* review of the 331 patent. The instituted grounds in Nu Mark's petition also relied on Takeuchi under 35 U.S.C. § 103 for claims 1-2, and further in view of Howell or Adiga, under 35 U.S.C. § 103 for claims 4-5. Ex. 1011 at p. 20. The proceeding was terminated on January 5, 2017, at the parties' request in view of an apparent settlement. Ex. 1012 at pp. 2-3.

In IPR2016-01438 listed above ("Nu Mark priority-based petition"), on December 29, 2016, the Board denied Nu Mark's petition for *inter partes* review of the 331 patent under 35 U.S.C. § 102 grounds based on U.S. Patent Publication No. 2007/0267031. Ex. 1013 at pp. 2, 12.

C. Lead and Back-Up Counsel

Lead Counsel	Back-Up Counsel
Ralph J. Gabric Reg. No. 34,167 rgabric@brinksgilson.com Brinks Gilson & Lione Suite 3600 NBC Tower 455 Cityfront Plaza Drive Chicago IL 60611-5599 T: 312-321-4200, F: 312-321-4299	Robert S. Mallin Reg. No. 35,596 rmallin@brinksgilson.com Yuezhong Feng Reg. No. 58,657 yfeng@brinksgilson.com Brinks Gilson & Lione Suite 3600 NBC Tower 455 Cityfront Plaza Drive

	Chicago IL 60611-5599 T: 312-321-4200, F: 312-321-4299

D. Service Information

Please address all correspondence to the lead and backup counsel at the contact information above. Petitioner also consents to service by email at rgabric@brinksgilson.com, rmallin@brinksgilson.com and yfeng@brinksgilson.com.

III. GROUNDS FOR STANDING

As required by 37 C.F.R. § 42.104(a), Petitioner certifies that the 331 patent is available for IPR and that Petitioner is not barred or estopped from requesting IPR on the grounds identified herein.

IV. IDENTIFICATION OF CHALLENGE AND STATEMENT OF THE PRECISE RELIEF REQUESTED

Petitioner requests *inter partes* review and cancellation of claims 1-2 of the 331 patent based upon 35 U.S.C. § 102 and/or § 103 as set forth herein. The 331 patent is to be reviewed under pre-AIA §§ 102 and 103. Petitioner's detailed statement of the reasons for relief requested is set forth below in the section titled "Statement of Reasons for the Relief Requested." In accordance with 37 C.F.R. § 42.6(c), copies of the exhibits are filed herewith. In addition, this Petition is accompanied by the declaration of Dr. Robert Sturges (Ex. 1002).

Claims 1-2 are unpatentable based upon the following grounds:

Ground 1: Claims 1-2 are unpatentable under 35 U.S.C. § 102 as anticipated by Takeuchi (Ex. 1003).

Ground 2: Claims 1-2 are unpatentable under 35 U.S.C. § 103 as obvious over Takeuchi (Ex. 1003).

U.S. Pat. No. 6,155,268 ("Takeuchi," Ex. 1003), issued December 5, 2000, is prior art under at least 35 U.S.C. § 102(b).

Statement of No Redundancy: This is the first and only petition being filed by Petitioner concerning the 331 patent.

The grounds presented in this petition are not redundant of grounds previously decided by the Board. While Grounds 1-2 rely on the same prior art, *i.e.*, Takeuchi, as Ground 1 in the NJOY petition in instituted IPR2014-01289 and Ground 1 in the Nu Mark petition in instituted IPR2016-01299, the Board did not issue a final written decision in those prior proceedings. Rather, after institution based on Takeuchi, the proceedings were terminated based on agreement of the parties. Ex. 1010 at pp. 2-3; Ex. 1012 at pp. 2-3. Thus, the Grounds presented here are particularly appropriate for review and not redundant. Further, even though PO previously addressed the prior art presented in this petition, any argument from PO about alleged prejudice or burden by being subjected to multiple petitions is unwarranted as PO elected to seek termination of those prior IPRs rather than to

continue them to resolution, and further, in view of PO's litigation activity. Indeed, in addition to numerous lawsuits against others, PO has filed four lawsuits against petitioner alleging infringement of 15 patents, and this is Petitioner's first and only petition concerning the 331 patent. Ex. 1039, Institution Decision dated Feb. 6, 2018 at p. 26 (Paper 8), *Samsung Elec. Am. v. Uniloc*, IPR2017-01801 (P.T.A.B., petition filed July 20, 2017) (Patent Owner's complaint about the multiple IPR petitions "is not persuasive when the volume appears to be a direct result of its own litigation activity.").

The invalidity grounds presented in this petition also are not redundant of grounds previously before the PTO. Takeuchi was not considered by the Examiner during prosecution; Takeuchi is not cited on the face of the 331 patent or its parent patent (U.S. Patent No. 7,832,410). Further, the Examiner did not have other evidence, such as Dr. Sturges' expert declaration to consider. Under situations such as this, the Board has rejected arguments that institution should be denied under 35 U.S.C. § 325(d). *See* Ex. 1040, Institution Decision dated Feb. 5, 2018 (Paper 9) at pp. 7-8, *Cascades Canada ULC v. SCA Hygiene Prods AB*, IPR2017-01921 (P.T.A.B., petition filed Aug. 7, 2017) ("While we are mindful of the burden on Patent Owner and the Office to rehear the same or substantially the same prior art or arguments previously presented to the Office, we are persuaded [] that Petitioner's arguments and the art upon which they are based differ

sufficiently from what was presented during prosecution, and have merit."); Ex. 1041, Institution Decision dated Jan. 19, 2018 at pp. 9-12, 17-19 (Paper 9), *Donghee America, Inc. v. Plastic Omnium Advanced Innovation and Research*, IPR2017-01654 (P.T.A.B., petition filed June 21, 2017) (instituting IPR based on prior art that formed the basis for rejection during prosecution because there was no evidence the Examiner considered "the unnumbered element in [prior art] Figure 1," the petitioner's "distinct arguments," and the evidence presented in the petition including the expert declaration); Ex. 1042, Institution Decision dated May 18, 2017 at p. 7 (Paper 9), *Limelight Networks, Inc. v. Mass. Inst. of Tech.*, IPR2017-00249 (P.T.A.B., petition filed Nov. 11, 2016) ("We are not persuaded … that a citation to prior art in an IDS, without substantive discussion of the reference by the Examiner, is sufficient reason to exercise our discretion under 35 U.S.C. § 325(d) to decline to institute an *inter partes* review"); Ex. 1043, Institution Decision dated July 15, 2015 at p. 15 (Paper 10), *Microsoft Corp. v. Parallel Networks Licensing, LLC*, IPR2015-00483 (P.T.A.B., petition filed Dec. 23, 2014) ("while [the reference] was listed on a lengthy Information Disclosure Statement initialed by the Examiner, the reference was not applied against the claims and there is no evidence that the Examiner considered the particular disclosures cited … in the Petition."); Ex. 1044, Institution Decision dated Mar. 13, 2013 at pp. 7, 20 (Paper 19), *Micron Tech., Inc. v. Bd. of Trs. of the Univ. of Ill.*,

IPR2013-00005 (P.T.A.B., petition filed Oct. 2, 2012) (instituting IPR based on prior art that "was before the Office during prosecution," and reasoning that "[t]he present record differs from the one before the Examiner" in that the Board now "consider[s] the [reference] in view of the [Expert] declaration testimony [], which was not before the Examiner."); *see also* Ex. 1045, Institution Decision dated Jan. 24, 2013 at pp. 16-19 (Paper 18), *Macauto U.S.A. v. BOS GMBH & KG*, IPR2012-00004 (P.T.A.B., petition filed Sept. 16, 2012) (explicitly rejecting examiner's reasoning about prior art during prosecution).

Accordingly, this Petition is not redundant, and instead is particularly appropriate for institution based on the two prior instituted IPR proceedings that were terminated based on settlement.

V. THRESHOLD REQUIREMENT FOR *INTER PARTES* REVIEW

This petition meets the threshold requirements under 35 U.S.C. § 314(a) because it establishes "a reasonable likelihood that the petitioner would prevail with respect to at least 1 of the claims challenged in the petition."

VI. STATEMENT OF REASONS FOR THE RELIEF REQUESTED

A. Background Information for the 331 Patent

The 331 patent describes an electronic atomization cigarette. Ex. 1001, Fig. 1. "A LED 1, a cell 2, an electronic circuit board 3, a normal pressure cavity 5, a sensor 6, a vapor-liquid separator 7, an atomizer 9, a liquid-supplying bottle 11 and

a mouthpiece 15 are sequentially provided within the shell 14." *Id*. at 2:34-37. "[A]n air inlet 4 is provided on the external wall of the shell 14." *Id*. at 2:33-34. Airflow passes from the air inlet 4 to an outlet in the mouthpiece 15, via the air passage 18, atomizer 9, aerosol passage 12, and gas vent 17. *Id.* at 3:15-17, 46-55.

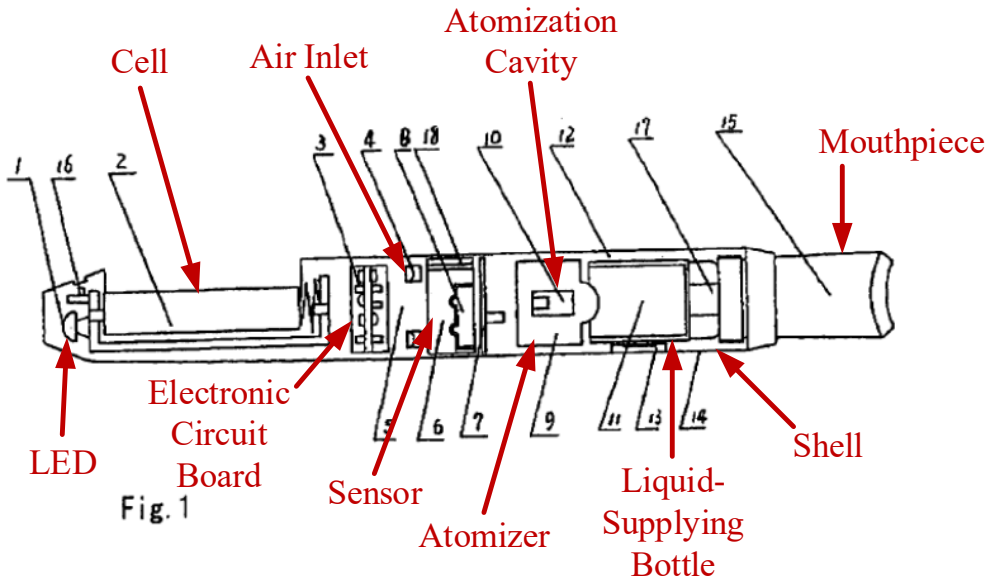

With reference to the annotated figure below, the atomizer 9 includes a porous body 27, an atomization cavity 10 and a heating wire 26. The porous body has a bulge 36 in contact with the solution storage porous body 28 in liquid-supplying bottle 11. *Id*. at 2:45-54, 63-66; 3:61-64. Liquid spent as a result of atomization is replenished from the liquid-supplying bottle by "capillary infiltration" through bulge 36 of the porous body 27. *Id*. at 3:61-64.

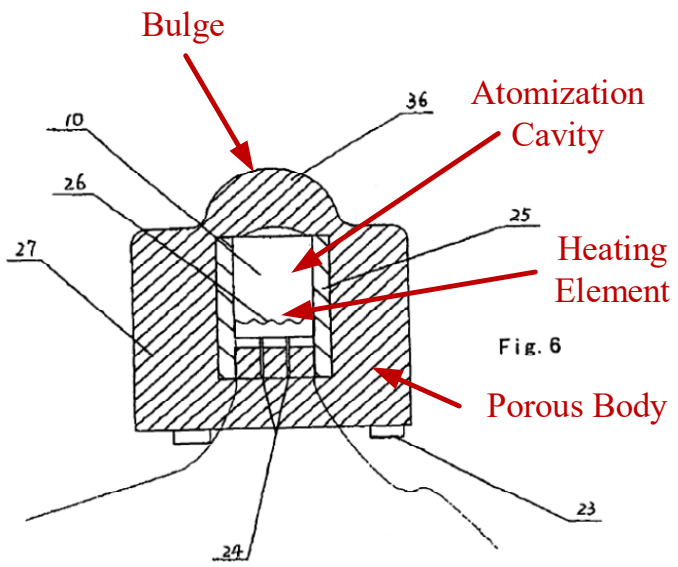

In operation, when a user puffs on the device, air enters normal pressure cavity 5 through the air inlet 4, passes through the air passage 18 of the sensor and then the through hole of the vapor liquid separator 7. Air then flows into the atomization cavity 10 by passing through the porous body 27 and the ejection holes 24. *Id.* at 3:46-49. The ejection holes create a high speed stream that nicotine solution from the porous body into the atomization chamber where the nicotine solution is atomized by the piezoelectric element and the heating element. *Id.* at 3:49-55.

B. Person Having Ordinary Skill in the Art ("PHOSITA")

A PHOSITA for the 331 patent would have had at least the equivalent of a Bachelor's degree in electrical engineering, mechanical engineering, or biomedical engineering or related fields, along with at least 5 years of experience designing

electromechanical devices, including those involving circuits, fluid mechanics and heat transfer. Ex. 1002 at ¶¶21-24.

C. Claim Construction

Pursuant to 37 C.F.R. § 42.100(b), a claim in an unexpired patent is given its broadest reasonable construction in light of the specification in which it appears. *In re Cuozzo Speed Techs., LLC*, 793 F.3d 1268, 1278-79 (Fed. Cir. 2015), *aff'd*, *Cuozzo Speed Techs. v. Lee,* 579 U. S. ____ (2016). Any ambiguity regarding the "broadest reasonable construction" of a claim term should be resolved in favor of the broader construction absent amendment by the patent owner, who can resolve ambiguities during *inter partes* review by amending the claims. *See,* Patent Trial Practice Guide, 77 Fed. Reg., at 48,764. Petitioner's construction of claim terms is for purposes of this IPR petition only and is not binding upon Petitioner in any other proceeding related to the 331 patent.

"liquid supply": Petitioner submits that "liquid supply" be interpreted to mean "the liquid itself." This is the interpretation that the Board adopted in IPR2016-01299 concerning the 331 patent after consideration of the parties' proposed interpretations, the claim language, the specification, the file history and the relevant dictionary definitions. Ex. 1011 at pp. 7-11. Specifically, the Board explained the following:

- "Liquid supply" is not defined in the specification. Ex. 1011 at p. 8.

- The plain meaning of "liquid supply" as evidenced by dictionary definitions is the liquid itself. *Id.*; Ex. 1033 at p. 1535.
- There is nothing inconsistent in the specification with the interpretation. In fact, the specification is consistent as it describes the nicotine solution as being in the housing. Ex. 1011 at pp. 8-9; Ex. 1001 at 3:65-4:3.
- The prosecution history is consistent with the proposed interpretation. During prosecution, claims reciting the term "liquid-supply source" were canceled and replaced with claims reciting "liquid-supply." Ex. 1011 at pp. 9-10; Ex. 1014-00064-67, Compilation of 331 Patent File History, Aug. 8, 2012 Amendment and Response to Notice of Non-Compliant Amendment at pp. 2-5. In view of the prosecution history and the dictionary definition of the term "source" ("the point or place from which something originates"), the Board found that the term "liquid supply *source*" should be construed as a store *for* liquid, while the term "liquid-supply" is not the store *for* liquid, but, instead, is the store *of* liquid. Ex. 1011 at pp. 7-11.
- The additional language in claim 2 is consistent with the proposed construction. Claim 2 additionally recites that "the atomizer making contact with the liquid supply to provide movement *of liquid* to the

atomizer via capillary action." The "liquid" referred to is a portion of the liquid-supply. Ex. 1011 at pp. 10-11.

- The additional language of claim 5 is also consistent with the proposed construction. Claim 5 further requires that the "liquid supply compris[es] a porous body." There is nothing in the specification or claim language that precludes the liquid supply from comprising other things, such as fiber, in the liquid. Ex. 1011 at p. 11.

Petitioner and its expert, Dr. Sturges agree with this interpretation under the applicable BRI standard. Ex. 1002 at ¶¶25-27. Accordingly, for purposes of this petition, liquid supply should be interpreted as meaning the liquid itself.[1]

---

[1] The Board specifically rejected PO's proposed construction that liquid supply means a "store for liquid." As the Board explained, that proposed construction is not supported. Indeed, the dictionary definitions that PO submitted established that "supply" refers to the thing itself, not the place where it is stored. Ex. 1011 at pp. 9-10. Similarly, the Board rejected the prior definition for liquid supply from IPR2015-01289 (liquid supply means "a part of the recited electronic cigarette that includes one or more components that supply liquid to the atomizer") because that construction was preliminary without the benefit of proposed constructions from either party in that proceeding. Ex. 1011 at p. 7; *see*

<u>"atomizer"</u>: Petitioner submits that "atomizer" be interpreted to mean "at least both the components that cause atomization and the mechanism that transfers liquid from the 'liquid-supply' to those components." This is the interpretation that the Board adopted in IPR2016-01299 concerning the 331 patent after consideration of the parties' proposed interpretations, the claim language, the specification and the file history. *See* Ex. 1011 at pp. 12-13. The Board's interpretation was supported by the specification which explains that contact between the solution storage body 28 and the bulge 36 on the porous body 27 transports liquid from the liquid-supplying bottle to the atomizer 9 via capillary action. Ex. 1001 at 3:61-64. The Board noted that consistent with the proposed interpretation and the specification, PO explained in its preliminary opposition that the "atomizer 9 includes a porous body 27 that makes contact with the solution storage porous body 28 inside the liquid-supplying bottle 11, allowing liquid to move from the storage body to the atomizer via capillary action." Ex. 1011 at pp. 12-13; Ex. 1036 at pp. 3-4. Accordingly, for purposes of this petition and under the

---

also Ex. 1009 at p. 10. By comparison, in IPR2016-01299 where liquid supply was interpreted to mean the liquid itself, the Board had the benefit of proposed constructions from the parties and also held a teleconference to discuss the meaning of the term "liquid supply." Ex. 1011 at pp. 7-11; Ex. 1035 at 9:6-18:22.

BRI standard, atomizer should be interpreted to mean "at least both components that cause atomization and the mechanism that transfers liquid from the liquid supply to those components."

"an LED at a first end of the housing": For purposes of this petition and under the BRI standard, Petitioner submits that this term be interpreted to mean an LED at "the outer extent of some portion of the housing." This is the same interpretation adopted by the Board in IPR2016-01299 and for the same reasons should be adopted here. Ex. 1011 at pp. 13-15; Ex. 1037 at p. 411 (defining "end" as "a point that marks the extent of something"); Ex. 1038 at p. 641 (defining "end" as "a point, line or limitation that indicates the full extent, degree, etc., of something; limit; bounds").

"physical contact": PO proposed in IPR2016-01289 that this term means "direct contact," and that construction was adopted by the Board. Ex. 1011 at p. 12 (n.9); *see also*, Ex. 1009 at pp. 8-9. For purposes of this petition, Petitioner adopts PO's previously proposed interpretation.

"cavity": PO proposed in IPR2014-01289 that this term means "a hollow space," and that construction was adopted by the Board. Ex. 1009 at p. 8. For purposes of this petition, Petitioner adopts PO's previously proposed interpretation.

"electronic cigarette" (preamble): Petitioner submits that the term "electronic cigarette" found in the preamble of claims 1 and 2 is not a limitation to

the claims. In general, a preamble limits the invention if it recites essential structure or steps, or if it is "necessary to give life, meaning, and vitality" to the claim. *Catalina Mktg. Int'l, Inc. v. Coolsavings.com, Inc.*, 289 F.3d 801, 808-810 (Fed. Cir. 2002). Conversely, a preamble is not limiting "where a patentee defines a structurally complete invention in the claim body and uses the preamble only to state a purpose or intended use for the invention." *Id.* While there is no litmus test for determining when a preamble operates as a limitation, courts have provided certain "guideposts" or examples of circumstances in which a preamble may establish a claim limitation. These include when: (1) the "Jepson" form is used for a claim; (2) the preamble is "essential to understand the limitations or terms in the claim body" (*e.g.,* when a preamble phrase provides the antecedent basis for other terms in the claim body); (3) the preamble recites "additional structure or steps underscored as important by the specification"; and (4) a patentee clearly relies on the preamble during prosecution to distinguish the claimed invention from the prior art. *Id.* None of those circumstances are applicable here. Indeed, the preamble language is not used in the body of the claim, and the alleged invention is fully defined by the claim limitations that follow the preamble. Ex. 1002 at ¶¶29-30. The Board has declined to treat the preamble as a limitation in similar instances. *See*, Ex. 1046, Institution Decision dated Dec. 30, 2016 at pp. 7-8 (Paper 11), *R.J. Reynolds Vapor Co. v. Fontem Holdings 1 B.V.*, IPR2016-01272 (P.T.A.B.,

petition filed July 2, 2016) (Board found that electronic cigarette did not "establish[] any necessary or defining aspect of the invention."); *see also,* Ex. 1047, Final Written Decision dated Jan. 25, 2016 at pp. 9-13 (Paper 39), *Google, Inc. v. Visual Real Estate, Inc.*, IPR2014-01339 (P.T.A.B., petition filed Aug. 20, 2014) (preamble reciting "a system including a video and data server farm" was not a limitation); Ex. 1048, Final Written Decision dated Feb. 17, 2016 at p. 18 (Paper 40), *Cisco Sys., Inc., et al. v. Capella Photonics, Inc.*, IPR2014-01276 (P.T.A.B., petition filed Aug. 12, 2014) ("servo-based' used in the preamble was not a limitation); Ex. 1049, Final Written Decision dated Mar. 28, 2016 at p. 11 (Paper 20), *RF Controls, LLC v. A-1 Packaging Sols., Inc.*, IPR2014-01536 (P.T.A.B., petition filed Sept. 23, 2014) (preamble reciting "an inventory tracking system for use in . . . an inventory tracking region" was not a limitation). Thus, Petitioner contends that the preamble is not a claim limitation and requires no interpretation.

Nonetheless, even if the preamble were interpreted as a limitation, the Board in IPR2016-01289 found that the term "electronic cigarette" means "a device for generating liquid droplets for inhalation by a user, where the device functions as a substitute for smoking, e.g., by providing 'nicotine without tar,' even if the device is not shaped like a traditional slender rolled cigarette." Ex. 1009 at pp. 7-8. Thus, if the Board decides that the preamble is a claim limitation and it requires

interpretation, Petitioner submits that it means "a device for generating liquid droplets for inhalation by a user, where the device functions as a substitute for smoking, e.g., by providing 'nicotine without tar,' even if the device is not shaped like a traditional slender rolled cigarette."

D. Description of the Prior Art

1. Takeuchi (Ex. 1003)

Like the 331 patent, Takeuchi describes a flavor-generating device for enjoying simulated smoking that generates an aerosol "by heating a liquid flavor source without relying on combustion." Ex. 1003 at 1:4-9. Takeuchi illustrates the flavor-generating device in annotated Fig. 1 below.

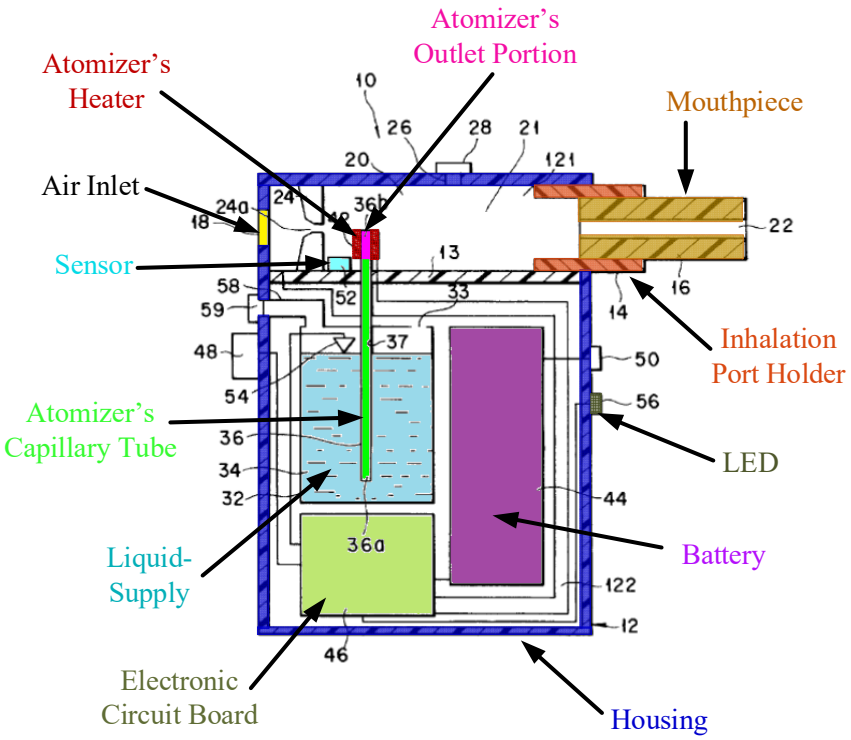

Ex. 1003 at Fig. 1 (Annotated)

The device depicted in annotated Fig. 1 above includes a housing (casing 12, upper chamber 121, and lower chamber 122), an air inlet (air intake port 18), an outlet (mouthpiece 16 inserted into inhalation port holder 14), an electronic circuit board (control circuit 46), a sensor (sensor 52), an atomizer (at least capillary tube 36, outlet portion 36b, heater 42), a battery (power source 44), an LED (lamp/light emitting diode 56), and a liquid-supply (liquid flavor source 34 in liquid container 32). *Id.* at 4:29-60, 5:28-6:29, 6:46-62, 7:2-7.

When used as a "simulated smoking article," the liquid (liquid flavor source 34) contains "tobacco components such as tobacco extracts and a tobacco smoke condensate." *Id.* at 5:43-46. The atomizer of Takeuchi that transports and vaporizes the liquid includes at least a capillary tube 36 and a heater 42 with a lower end 36a and an upper end 36b. Takeuchi explains that the heater 42 is mounted to the top of the capillary tube and has the same inner diameter. Thus, the heater forms the outlet portion 36b.[2] *Id.* at 5:47-6:29. Thus, in the Fig. 1 embodiment, these

[2] The outlet portion is in some instances identified in the specification as 36a. However, a PHOSITA would have understood that this is a typographical error and should say 36b. The outlet is shown as 36b in the figures and the lower end is both described and shown in the specification as 36a. Ex. 1002 at ¶47 (n.2).

components cause atomization (heater 42) and are the mechanism (capillary tube 36) that transfers liquid from the liquid supply to those components. The capillary tube 36 transports the liquid by capillary action from a liquid container to the heating element where the liquid is vaporized and enters the gas passageway. *Id.* at 2:1-25, 5:47-6:29. The gas passageway is in the upper chamber 121, running between the "air inlet port for introducing the air" and the "inhalation port through which a user inhales a flavor." *Id.* at 2:1-6.

Takeuchi illustrates numerous heating element configurations that can be used interchangeably in the flavor-generating device. *See* Ex. 1002 at ¶49; Ex. 1003 at Figs. 2A-C, 3-7, 9-11, 14-15, Col. 8:16-48, 9:35-44, 10:22-27, 10:50-67. All configurations utilize capillary action to move the fluid to the heating element. Ex. 1002 at ¶49. The capillary action is obtained using, for example, a capillary tube. Ex. 1003 at 3:36-42; Ex. 1002 at ¶49. In one embodiment, Takeuchi discloses a "rod-like" heater 74 mounted in the liquid passageway (*e.g.*, capillary tube). Ex. 1003 at 8:22-23. As shown below, Figure 4 illustrates the "rod-like heater 74" mounted within the capillary tube 36 of Figure 1.

The Board has previously agreed that this is a typographical error. Ex. 1009 at p. 12 (n.9).

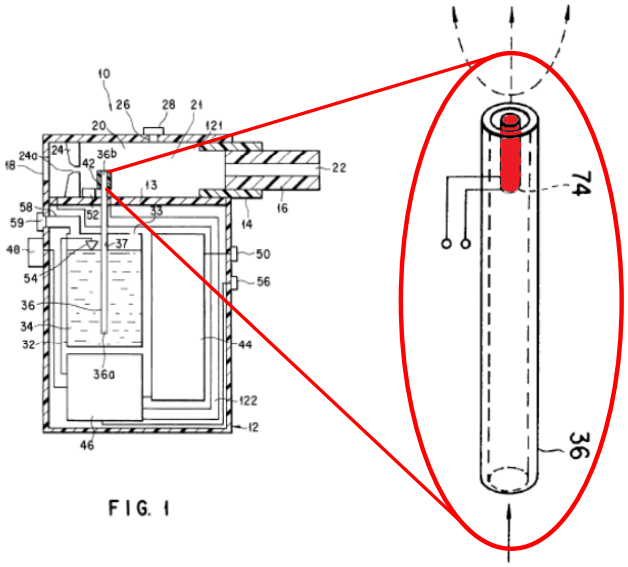

FIG. 1

FIG. 4

Ex. 1003 at Figs. 1, 4 (Annotated)

In this embodiment, the heater 74 is inside the capillary tube 36 as shown in Fig. 4. Thus, the atomizer is the capillary tube 36 with the heater rod located inside the tube. Ex. 1002 at ¶65.

In operation, as shown in Figure 1 above, a user's inhaling action is sensed by a sensor 52 and a control circuit 46 activates the heater 42, which vaporizes the liquid in the liquid passageway 37. *Id.* at 7:51-63. The user's inhalation also creates an air stream from the air inlet port 18 to the mouthpiece 16 where the air mixed with the vaporized liquid is inhaled by the user. *Id.* at 7:48-8:15.

E. GROUND 1: CLAIMS 1-2 OF THE 331 PATENT ARE UNPATENTABLE AS ANTICIPATED BY TAKEUCHI

As explained below and as the Board previously ruled, Takeuchi discloses all the limitations of independent claims 1-2 of the 331 patent, and therefore

anticipates claims 1-2 under 35 U.S.C. § 102. *See* Ex. 1009 at pp. 13-18, 22; Ex. 1011 at p. 15 (n.12), 16-20. As noted above, the Board previously twice instituted a trial with respect to claims 1-2 based on Takeuchi. Both proceedings were terminated due to settlements between the parties. Ex. 1010 at p. 3; Ex. 1012 at p. 3.

1. Claim 1 Is Anticipated by Takeuchi

a. "An electronic cigarette comprising"

The preamble is not a claim limitation. However, to the extent it is considered a limitation, Takeuchi discloses an electronic cigarette. Ex. 1003 at 1:3-8, 5:40-46; Ex. 1002 at ¶57.

Claim 1.[a]	Takeuchi
An electronic cigarette comprising:	"The present invention relates to a flavor-generating device for enjoying inhalation of flavor or for enjoying simulated smoking, and more particularly, to a flavor-generating device for generating flavor which is to be inhaled by a user by heating a liquid flavor source without relying on combustion." Ex. 1003 at 1:3-8. "[W]here the device is used as a simulated smoking article, it is possible for the liquid flavor source 34 to contain tobacco components such as tobacco extracts and a tobacco smoke condensate." *Id.* at 5:40-46. Ex. 1002 at ¶57.

b. "a housing"

As illustrated in annotated figure and claim chart below, Takeuchi discloses a housing, *i.e.*, casing 12, the inner space of which "is partitioned into an upper chamber 121 and a lower chamber 122." Ex. 1003 at 4:29-38, Fig. 1; Ex. 1002 at ¶58.

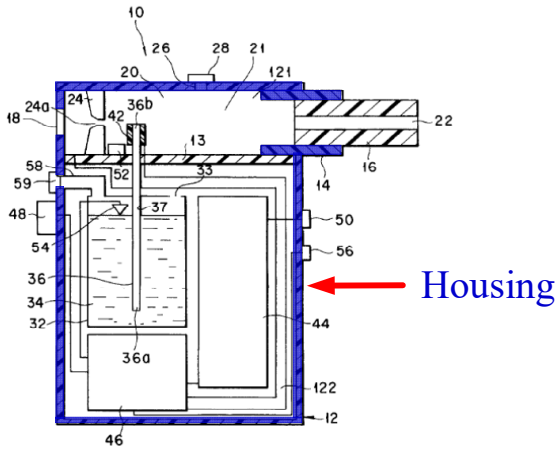

Ex. 1003 at Fig. 1 (Annotated)

Claim 1.[b]	Takeuchi
a housing;	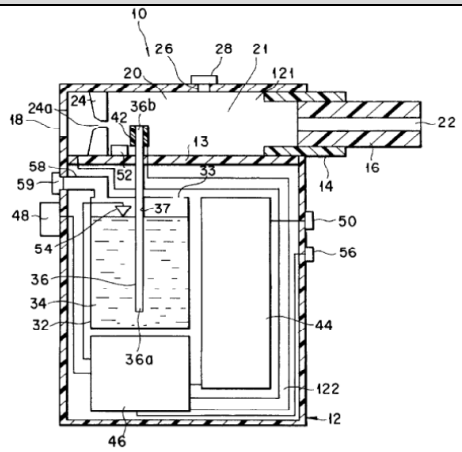 Ex. 1003 at Fig. 1. "As shown in FIG. 1, the flavor-generating device 10 includes a casing 12 made of plastic, metal, ceramic, wood, etc. The inner space of

	the casing 12 is partitioned into an upper chamber 121 and a lower chamber 122 by a partition wall 13. As will be described herein later, the upper chamber 121 is used as a gas passageway 20 for forming a gaseous stream of a flavor which is to be inhaled by a user. On the other hand, the lower chamber 122 is used as a housing for housing a liquid container 32, a power source 44 and a control circuit." *Id.* at 4:29-38. Ex. 1002 at ¶58.

c. "a mouth piece on the housing"

As illustrated in annotated figure and claim chart below, Takeuchi discloses a "mouth piece 16 having an inhalation port 22 through which a user inhales a flavor is detachably inserted into the holder 14." Ex. 1003 at 4:39-47, Fig. 1. Takeuchi thus discloses a mouth piece on the upper portion of the housing (casing 12 on upper chamber 121). *Id.*; Ex. 1002 at ¶59.

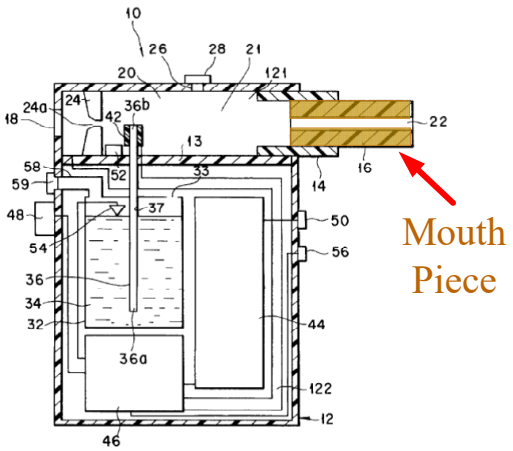

Ex. 1003 at Fig. 1 (Annotated)

Claim 1.[c]	Takeuchi
a mouth piece on the housing;	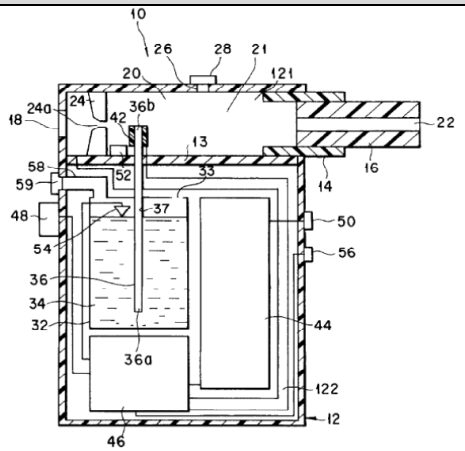 Ex. 1003 at Fig. 1. "An inhalation port holder 14 defining a cylindrical opening is mounted at one side end portion of the upper chamber 121 of the casing 12. A mouth piece 16 having an inhalation port 22 through which a user inhales a flavor is detachably inserted into the holder 14. The mouth piece 16, which is directly taken in the mouth of a user, is made of, for example, a plastic material or wood. Incidentally, it is possible to insert a filter into the holder 14 in place of using the mouth piece 16." *Id.* at 4:39-47. Ex. 1002 at ¶59.

d. "an LED at a first end of the housing"

Claim 1 recites "an LED at a first end of the housing." The Board previously construed this term to mean an LED at "the outer extent of some

portion of the housing." Ex. 1011 at pp. 13-15. Takeuchi discloses LED 56 "arranged on the outside surface of the lower chamber 122 of the casing 12." Ex. 1003 at 7:2-7, Fig. 1; Ex. 1002 at ¶60.

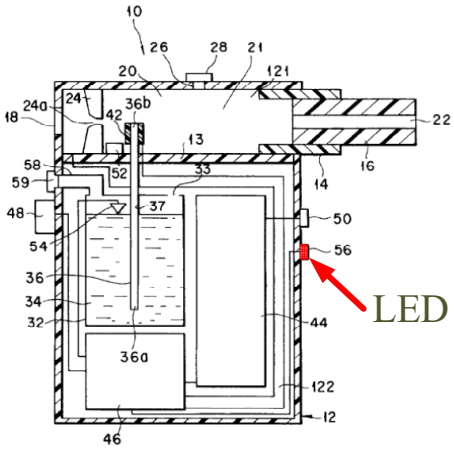

Ex. 1003 at Fig. 1 (Annotated)

Therefore, like the Board previously held, Takeuchi teaches an LED at a first end of the housing by virtue of LED 56 being on an outer surface of the housing, *i.e.*, casing 12. *See* Ex. 1011 at pp. 13-15.

Claim 1.[d]	**Takeuchi**
an LED at a first end of the housing;	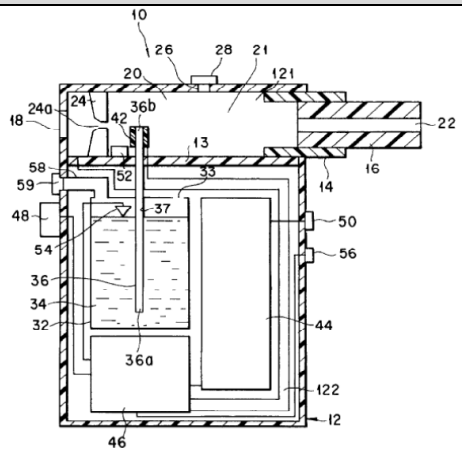 Ex. 1003 at Fig. 1.

	"Also, an electrical display means, e.g., a lamp 56 which may be constituted by a light emitting diode, is arranged on the outer surface of the lower chamber 122 of the casing 12 in order to inform the user that the remaining amount of the liquid flavor source 34 within the liquid container 32 is small. Each of the liquid amount sensor 54 and the lamp 56 is connected to the control circuit 46 so as to be operated under control of the control circuit 46." *Id.* at 7:2-9. Ex. 1002 at ¶60.

e. "an air inlet leading into the housing"

As illustrated in annotated figure and claim chart below, Takeuchi discloses this feature. Takeuchi describes an air inlet ("air intake port 18") at the left end of the housing that leads into the upper chamber 121. Ex. 1003 at 4:48-50, 8:5-15, 9:8-12, Fig. 1; Ex. 1002 at ¶61.

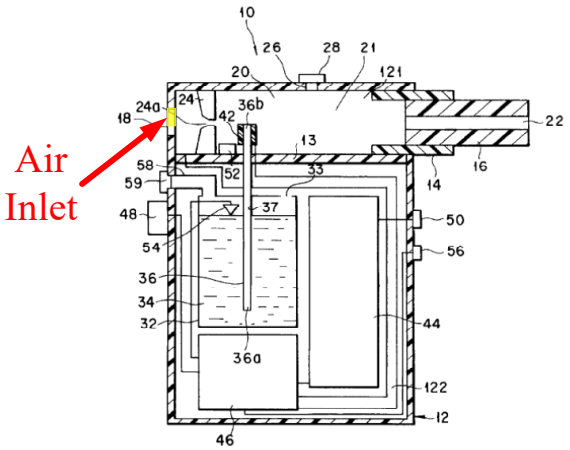

Ex. 1003 at Fig. 1 (Annotated)

Claim 1.[e]	Takeuchi
an air inlet leading into the housing;	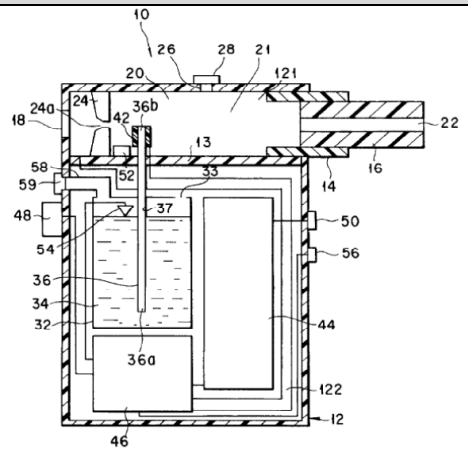 Ex. 1003 at Fig. 1. "On the other hand, an air intake port 18 for introducing the air into the upper chamber 121 is formed on the other side portion of the upper chamber 121." *Id.* at 4:48-50. "The gasified flavor source is mixed with the main air introduced through the air intake port 18 and the squeeze hole 24a into a region around the outlet port 36a of the capillary tube 36 in accordance with the inhaling action of the user and, then, the mixture is transferred into the inhalation port 22. The amount of the air introduced through the outer air inlet port 26 can be changed during the inhaling action, if necessary, by controlling the adjusting shutter 28. It follows that the taste of the air containing a flavor, which is transferred to the inhalation port 22, can be changed appropriately in accordance with the preference of the user." *Id.* at 8:5-15. "The air intake port 18 like one shown in FIG. 1 is provided at the closed end (lower end) of the upper chamber 121. A mouthpiece 161 may be detachably inserted directly, i.e., without

	through a holder, into the open end portion (upper end portion) of the upper chamber 121." *Id.* at 9:8-12. Ex. 1002 at ¶61.

f. "a battery within the housing"

As illustrated in annotated figure and claim chart below, Takeuchi discloses a battery ("power source 44," "such as a primary battery (dry battery), or a secondary battery (rechargeable battery)") within the housing ("casing 12"). Ex. 1003 at 4:35-38, 6:12-17, Fig. 1; Ex. 1002 at ¶62.

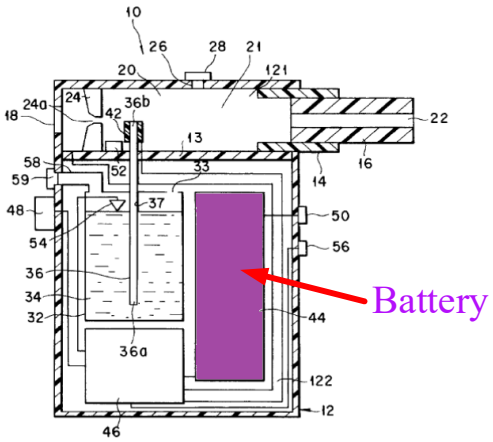

Ex. 1003 at Fig. 1 (Annotated)

Claim 1.[f]	Takeuchi
a battery within the housing;	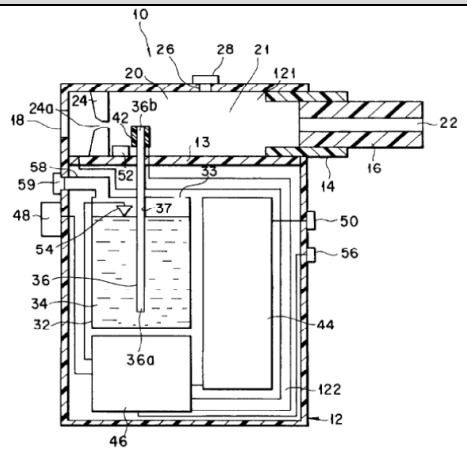 Ex. 1003 at Fig. 1. "On the other hand, the lower chamber 122 is used as a housing for housing a liquid container 32, a power source 44 and a control circuit." *Id.* at 4:35-38. "An electric power is supplied from a power source 44 detachably mounted within the lower chamber 122 of the casing 12 to the electric heater 42. It is desirable to use as the power source 44 a DC power source available on the market such as a primary battery (dry battery), or a secondary battery (rechargeable battery)." *Id.* at 6:12-17. Ex. 1002 at ¶62.

g. "an electronic circuit board within the housing"

As illustrated in annotated figure and claim chart below, Takeuchi discloses an electronic circuit board (control circuit 46) within the lower chamber 122 of the housing (casing 12). Ex. 1003 at 4:35-38, 6:23-25, 6:55-62, Fig. 1; Ex. 1002 at

¶63. Takeuchi discloses that the electronic circuit (control circuit 46) also includes signal processing and control that are hallmarks of electronic circuitry on a circuit board. Ex. 1003 at 6:55-62, 7:51-56, 2:29-33; Ex. 1002 at ¶63. As Dr. Sturges explains, a PHOSITA would have understood from the disclosure of Takeuchi that control circuit 46 necessarily, and inherently, includes an electronic circuit board. Ex. 1002 at ¶¶44-45, 52-55, 63; *see also* Ex. 1016, U.S. Pat. No. 5,745,985 ("Ghosh") (method of attaching a microchip to a circuit board); Ex. 1017, U.S. Pat. No. 4,208,005 ("Nate") (method for mounting parts on circuit boards); Ex. 1018, U.S. Pat. No. 4,945,448 ("Bremenour") (a patent directed to a memory cartridge for a circuit board); and Ex. 1019, ("Dally") at pp. 3-5, 129-134 (describing methods for packaging electronic systems, *e.g.*, circuit boards - "the primary field replaceable unit that embodies many very important functions…").

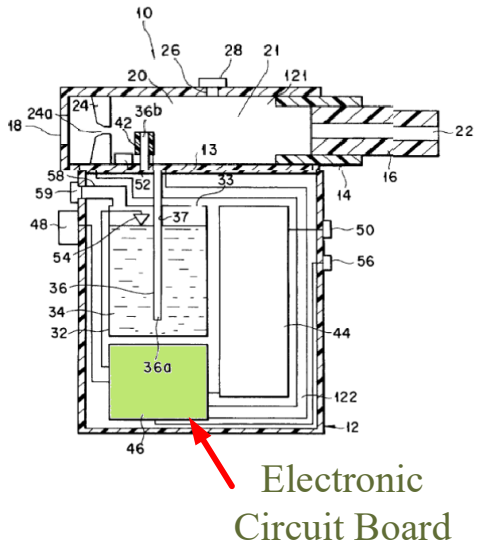

Ex. 1003 at Fig. 1 (Annotated)

Petitioner notes that the Board previously held that Takeuchi teaches an electronic circuit board within the housing (and every other limitation recited in independent claims 1 and 2). Ex. 1011 at pp. 15 (n.12), 16-19.

Claim 1.[g]	**Takeuchi**
an electronic circuit board within the housing;	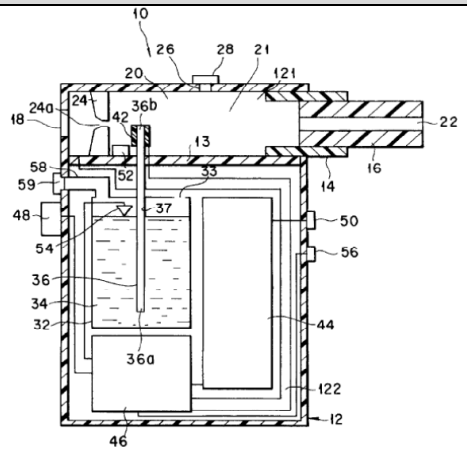 Ex. 1003 at Fig. 1. "On the other hand, the lower chamber 122 is used as a housing for housing a liquid container 32, a power source 44 and a control circuit [46]." *Id.* at 4:35-38. "The heater 42 and the power source 44 are driven under the control of the control circuit 46 fixed within the lower chamber 122." *Id.* at 6:23-25. "The control circuit 46 serves to start up the heater 42 based on the signal from the heater switch 48 or in accordance with the inhaling action of the user based on the signal from the sensor 52 so as to gasify the liquid flavor source 34 at the outlet portion 36b of the capillary tube 36. The signal processing and control are performed within the control circuit 46 in accordance with, for example, a known

	analog control, a two-position control or a combination thereof." *Id.* at 6:55-62. "As a result, an inhaling action signal is transferred from the sensor 52 to the control circuit 46. Then, under the control of the control circuit 46, an electric power is supplied from the power source 44 to the heater 42 so as to turn the heater 42 on." *Id.* at 7:51-56. "It should be noted in particular that the heater can be controlled on the basis of a signal from a sensor for detecting the inhaling action of the user, with the result that the flavor can be supplied to the user with a high stability." *Id.* at 2:29-33. "The lower chamber 122 is partitioned by a partition wall 131 into an upper sub-chamber 122a, which houses the control circuit 46, and a lower sub-chamber 122b, which houses the electric power source 14. In the device shown in FIG. 8, the electrical connections are essentially the same as those in the device shown in FIG. 1, and thus are not shown in FIG. 8." *Id*. at 9:1-7. Ex. 1002 at ¶63.

h. "a sensor within the housing"

As illustrated in annotated figure and claim chart below, Takeuchi discloses a sensor (sensor 52) within the housing (casing 12). Takeuchi describes that the "sensor 52 for detecting the inhalation action of the user is arranged within the

upper chamber 121 of the casing 12." Ex. 1003 at 6:25-28, 32-42, 46-62, 7:51-56, Fig. 1; Ex. 1002 at ¶64.

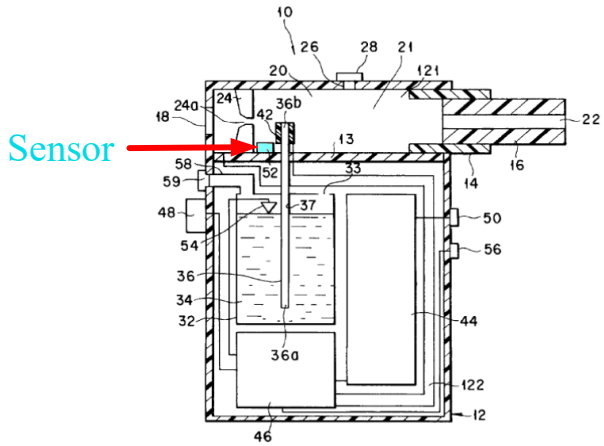

Ex. 1003 at Fig. 1 (Annotated)

Claim 1.[h]	Takeuchi
a sensor within the housing;	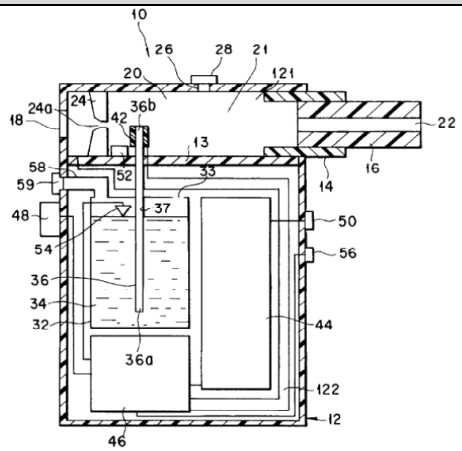 Ex. 1003 at Fig. 1. "To the control circuit 46, a switch 48 for the heater 42 which can independently turn the heater on, and a sensor 52 for detecting the inhalation action of a use are connected." *Id.* at 6:25-28. "When the device is not used, operation of the device can be ceased by turning the power

	source switch 50 off manually. Of course, when the device is used, firstly the power source switch is turned on. Further, the heater switch 48, when turned on after the power source switch 50 is turned on, can drive the heater 42 independently of the detection, by the sensor 52, of the inhalation action of a user. That is, after the power source 44 is driven, the heater can be made into a heated state by turning on the heater switch 48. When the control circuit 46 detects the on state of the heater switch 48, it ceases the operation of the sensor 52." *Id.* at 6:32-42. "The sensor 52 for detecting the inhaling action of the user is arranged within the upper chamber 121 of the casing 12, and is positioned between the squeeze plate 24 and the heater 42. It is possible to use as the sensor 52 a general pressure sensor for detecting a change in the pressure within the chamber 121 as a change in electrical resistance, as a change in electrical capacitance or as a piezoelectric electromotive force, or a rocking vane type sensor for detecting a gas stream within the chamber 121. The control circuit 46 serves to start up the heater 42 based on the signal from the heater switch 48 or in accordance with the inhaling action of the user based on the signal from the sensor 52 so as to gasify the liquid flavor source 34 at the outlet portion 36b of the capillary tube 36. The signal processing and control are performed within the control circuit 46 in accordance with, for example, a known analog control, a two-position control or a combination thereof." *Id.* at 6:46-62. "As a result, an inhaling action signal is transferred from the sensor 52 to the control

	circuit 46. Then, under the control of the control circuit 46, an electric power is supplied from the power source 44 to the heater 42 so as to turn the heater 42 on." *Id.* at 7:51-56. Ex. 1002 at ¶64.

i. "an atomizer within the housing"

As illustrated in annotated figures and claim chart below, Takeuchi discloses "an atomizer within the housing." The Board previously construed the term "atomizer" to include "at least both the components that cause atomization and the mechanism that transfers liquid from the 'liquid-supply' to those components." Ex. 1011 at pp. 12-13. Takeuchi discloses an atomizer that includes at least a heater 42 mounted on a capillary tube 36 with a lower end 36a and an outlet port 36b (which is a hollow space) formed by the heater 42. The heater turns the liquid into aerosol and the liquid-supply moves from the liquid container 32 where it is stored up through the capillary tube 36 to the heater 42 by capillary action so that it can be atomized. Ex. 1003 at Abstract; 4:26-28, 6:4-12, 7:48-8:4, 8:22-23; Ex. 1002 at ¶65.

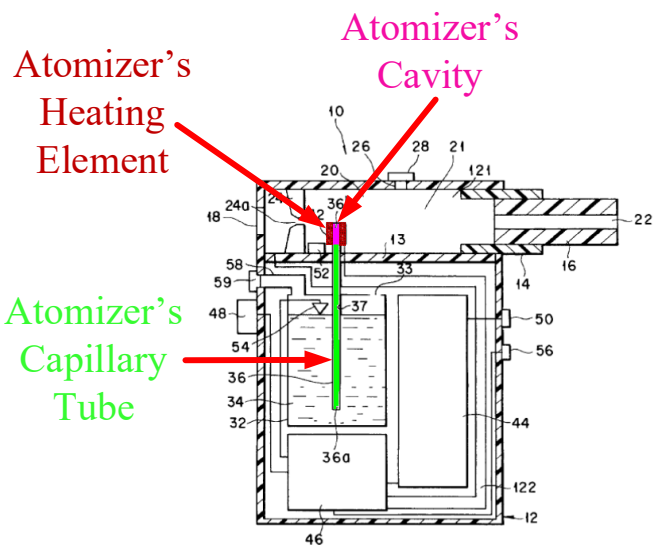

Ex. 1003, Takeuchi at Fig. 1 (Annotated)

Specifically, Takeuchi teaches that the atomizer includes a tube (capillary tube 36) which works together with a heating element (heater 42) to facilitate vaporization in a hollow space identified as the outlet port 36b formed by the heater mounted atop the capillary tube. As mentioned, the heater has the same inner diameter as the capillary tube, *i.e.*, the tube transports the liquid (liquid flavor source 34) by capillary force to the heater 42, where the heater 42 gasifies the liquid (as shown in Fig. 1) in the outlet portion 36b. Ex. 1003 at 5:47-6:59, 7:57-63. In the Fig. 4 embodiment, the heater 42 is replaced with a rod located inside the capillary tube 36 at the outlet port 36b. Thus, the atomizer is the capillary tube with the rod-like heater inside the hollow space at the outlet port 36b of the capillary tube. Ex. 1003 at 8:22-23, Fig. 4; Ex. 1002 at ¶65.

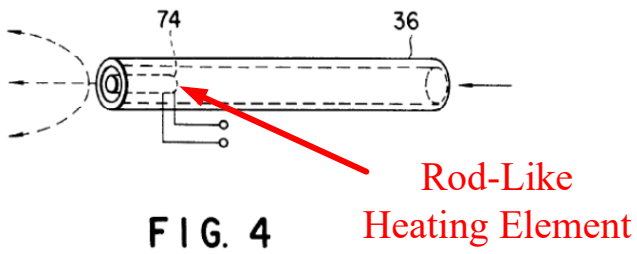

Ex. 1003, Takeuchi at Fig. 4 (Annotated)

Therefore, like the Board previously held, Takeuchi teaches an atomizer including both the components that cause atomization ("heater 42") and the mechanism ("liquid passageway," such as "capillary tube 36") that transfers liquid from the liquid-supply to those components. *See* Ex. 1011 at pp. 17-18.

Claim 1.[i]	**Takeuchi**
an atomizer within the housing;	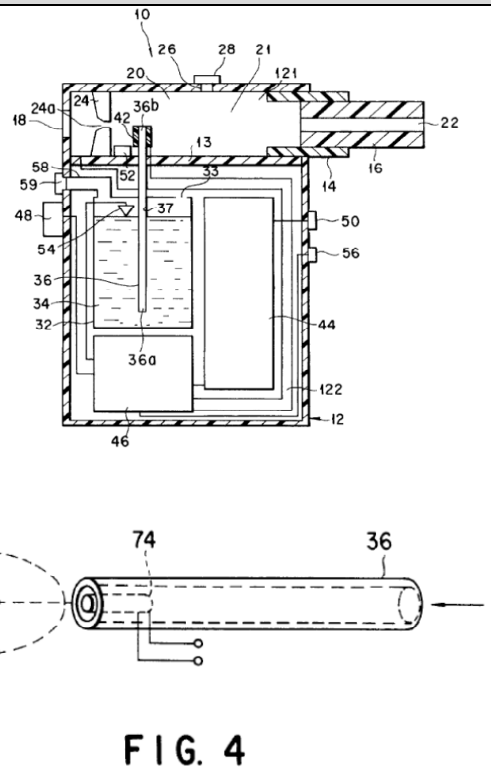 Ex. 1003 at Figs. 1, 4.

	"At least one liquid passageway is provided in fluid communication with the liquid flavor source at its first end portion and with the gas passageway at its second end portion. The liquid passageway transports the liquid flavor source therethrough by capillary force. A heater heats and evaporates the liquid flavor source at the second end portion of the liquid passageway." Ex. 1003 at Abstract. "FIG. 1 shows the construction of a flavor-generating device 10 according to one embodiment of the present invention. In the device 10, the liquid passageway is constituted by a capillary tube." *Id.* at 4:26-28. "The capillary tube 36 for transporting the liquid flavor source by the capillary force is inserted within the liquid container. The capillary tube 36 defines a liquid passageway 37 for the liquid flavor source, and its lower end 36a is positioned in the vicinity of the bottom of the liquid container 32." Id. at 5:47-48. "The upper end portion of the capillary tube 36 protrudes into the upper chamber 121 of the casing 12 somewhat downstream of the squeeze plate 24 and is equipped with the heater 42 serving to gasify the liquid flavor source 34. In the embodiment shown in FIG. 1, the heater 42 consists of a tubular body mounted to the capillary tube 36 and having an inner diameter equal to that of the capillary tube 36. In other words, the outlet port 36a of the liquid passageway 36 is formed by the heater 42 itself." *Id.* at 6:4-12. "The control circuit 46 serves to start up the heater 42 based on the signal from the heater

	switch 48 or in accordance with the inhaling action of the user based on the signal from the sensor 52 so as to gasify the liquid flavor source 34 at the outlet portion 36b of the capillary tube 36." *Id.* at 6:55-59. "Specifically, where the device 10 is used for inhaling a flavor, the power source switch 50 is turned on first by a user. Then, the mouth piece 16 is taken in the mouth of the user for the inhaling action through the inhalation port 22. As a result, an inhaling action signal is transferred from the sensor 52 to the control circuit 46. Then, under the control of the control circuit 46, an electric power is supplied from the power source 44 to the heater 42 so as to turn the heater 42 on. In this step, the liquid flavor source 34 is already transported to the outlet port 36a of the capillary tube 36 by the capillary force of the capillary tube 36 as shown in FIG. 2A. If the heater 42 is turned on under this condition, the liquid flavor source 34 within the outlet port 36a is instantly gasified by the heat generated from the heater 42 as shown in FIG. 2B so as to be supplied into the gas passageway 20. Upon gasification of the liquid flavor source 34 within the outlet port 36a by the heating with the heater 42, the liquid flavor source 34 is newly supplied from the liquid container 32 into the outlet port 36a of the capillary tube 36 by the capillary force of the capillary tube 36, as shown in FIG. 2C. In this fashion, supply and gasification of the liquid flavor source 34 are repeated within the outlet port 36a of the capillary tube 36." *Id.* at 7:48-8:4.

	"In the modification shown in FIG. 4, a rod-like heater 74 is inserted into the outlet port 36a of the capillary tube 36." *Id.* at 8:22-23. Ex. 1002 at ¶65.

j. "a stream passage within the housing leading from the inlet to the atomizer"

As illustrated in annotated figure and claim chart below, Takeuchi discloses a stream passage[3] (gas passageway 20) within the upper chamber 121 of the housing (casing 12). Takeuchi further discloses that the "gas passageway 20 is defined within the upper chamber 121 of the casing 12, between the air intake port 18 and the inhalation port 22." Therefore, the stream passage (gas passageway 20) leads from the inlet (air intake port 18) to the atomizer (*i.e.*, the heater 42, capillary

[3] Petitioner notes that in IPR2014-01289 involving the 331 patent, the Board ruled that the "stream passage within the housing leading from the inlet to the atomizer" simply requires flow to the atomizer in some fashion, without requiring that it flow through the middle of the atomizer itself. Ex. 1009 at pp. 17-18 ("The claim phrase 'a stream passage within the housing leading from the inlet *to the atomizer*' (claim 1, emphasis added) does not require that the air stream passage flow through the middle of the atomizer itself, just that it flow to the atomizer in some fashion.").

tube 36 and outlet portion 36b) and eventually to the inhalation port 22. Ex. 1003 at 4:33-35, 50-52, 61-67, Fig. 1; Ex. 1002 at ¶66.

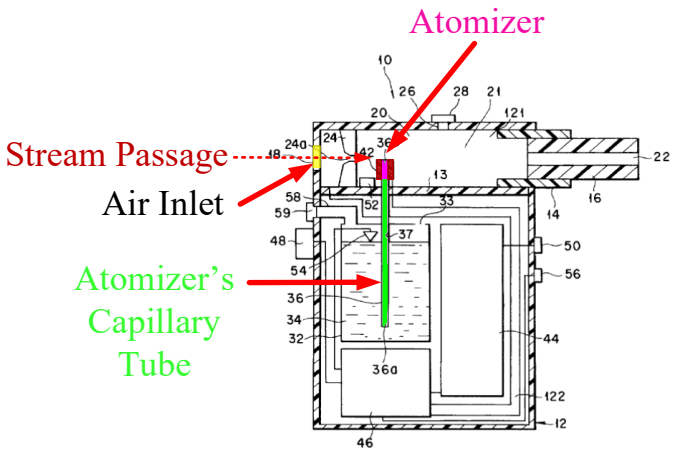

Ex. 1003 at Fig. 1 (Annotated)

Claim 1.[j]	**Takeuchi**
a stream passage within the housing leading from the inlet to the atomizer;	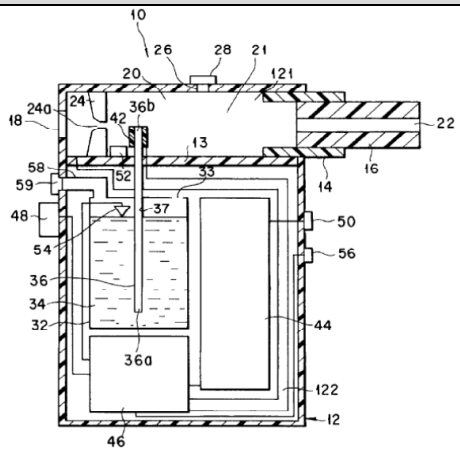 Ex. 1003 at Fig. 1. "As will be described herein later, the upper chamber 121 is used as a gas passageway 20 for forming a gaseous stream of a flavor which is to be inhaled by a user." *Id.* at 4:33-35. "The gas passageway 20 is defined within the upper chamber 121 of the casing 12, between

	the air intake port 18 and the inhalation port 22." *Id.* at 4:50-52. "A squeeze plate 24 having a squeeze hole 24a formed in the central portion is arranged within the gas passageway 20 and positioned close to the air intake port 18. The squeeze hole 24a of the squeeze plate 24 act to regulate or direct the air introduced from the intake port 18 selectively toward [an] outlet portion 36b of a capillary tube 36 described in detail below." *Id.* at 4:61-67. Ex. 1002 at ¶66.

k. "a cavity arranged in the atomizer"

As illustrated in annotated figures and claim chart below, Takeuchi discloses "a cavity arranged in the atomizer." The Board previously construed the term "cavity" to mean "a hollow space." Ex. 1009 at p. 8. Takeuchi discloses a cavity (outlet port 36b), which is a hollow space, within the heater 42 at the end of the capillary tube 36, as shown below in Fig. 1. Ex. 1002 at ¶67. Fig. 2B is an enlarged view of the tube (capillary tube 36) defining a liquid passageway (liquid passageway 37) for the transport of the liquid-supply (liquid flavor source 34), entering the cavity (outlet port 36b) where it is atomized by the heating element (heater 42). Ex. 1003 at 7:57-8:5, 5:1-11, Figs. 1, 2A, 2B, 2C, 3-7; Ex. 1002 at ¶67.

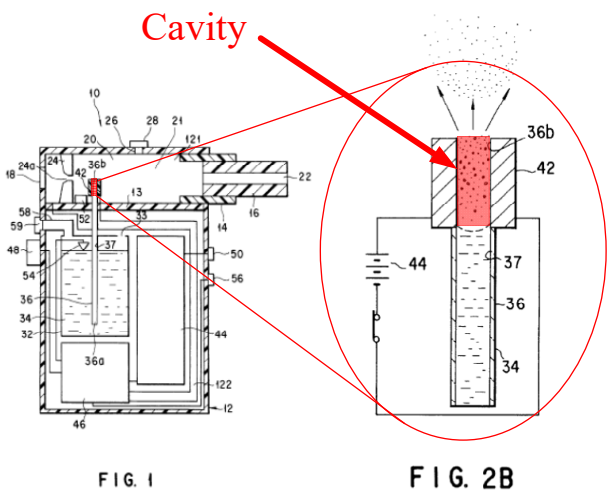

Ex. 1003, Takeuchi at Figs. 1 and 2B (Annotated)

Similarly, Takeuchi discloses a cavity in the atomizer when the heating element is internal to the capillary tube. As shown in annotated Figs. 1 and 4 below, Takeuchi discloses a cavity (within outlet portion 36b) arranged within the atomizer (at least capillary tube 36 having outlet portion 36b with rod-like heater). *See* Ex. 1002 at ¶67.

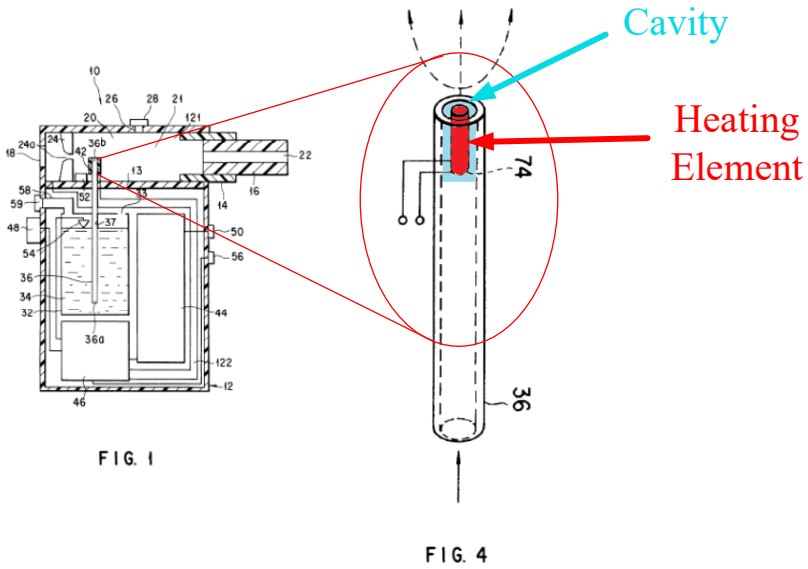

Ex. 1003, Takeuchi at Figs. 1 and 4 (Annotated)

In addition to the cavity disclosed above, a second cavity exists within the atomizer. Specifically, the area within the upper chamber by the squeeze plate hole 24a and heater 42 also is where the particles first exit outlet port 36b and mix with outer air from the outer air introduction hole 26, and it is a part of Takeuchi's atomizer that includes components (*e.g.*, 42, 36b, 36) that convert liquid into aerosols. Accordingly, this hollow area within the upper chamber represents a second cavity within the atomizer of Takeuchi. Ex. 1002 at ¶67.

Claim 1.[k]	**Takeuchi**
a cavity arranged in the atomizer;	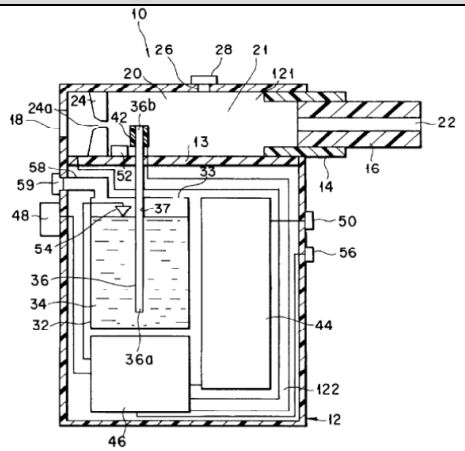 Ex. 1003 at Fig. 1.

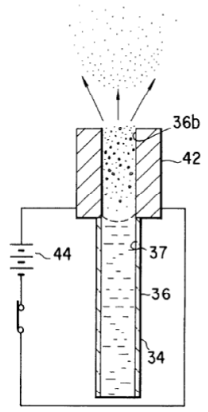

FIG. 2B

Id. at Fig. 2B.

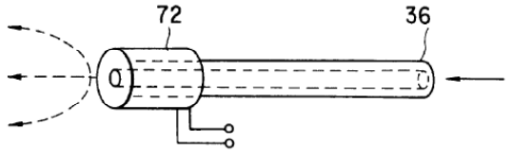

FIG. 3

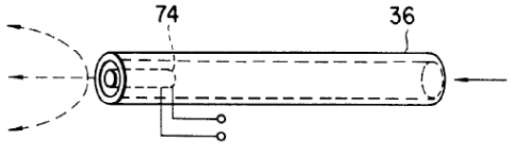

FIG. 4

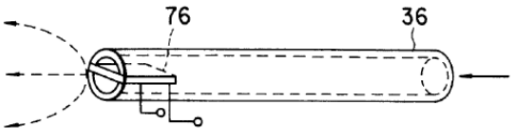

FIG. 5

Id. at Figs. 3-5.

	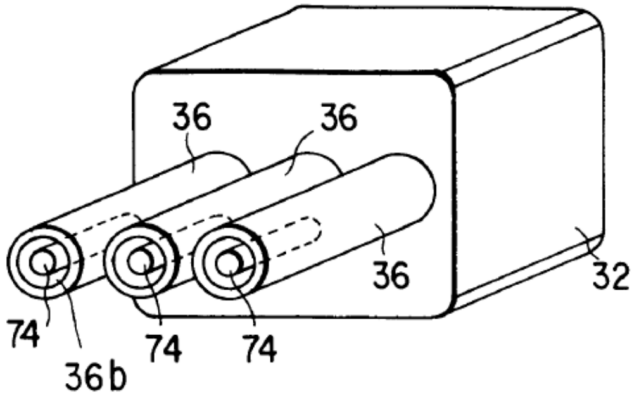 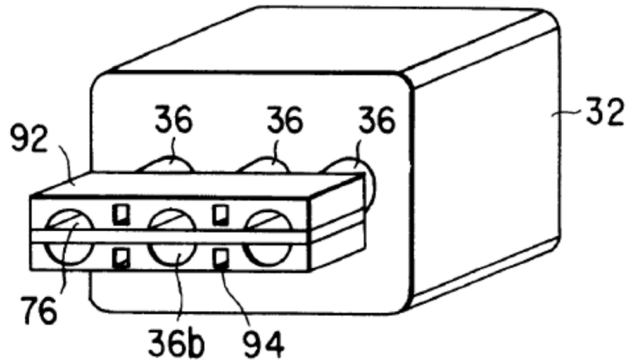 *Id.* at Figs. 6-7. "In this step, the liquid flavor source 34 is already transported to the outlet port 36a of the capillary tube 36 by the capillary force of the capillary tube 36 as shown in FIG. 2A. If the heater 42 is turned on under this condition, the liquid flavor source 34 within the outlet port 36a is instantly gasified by the heat generated from the heater 42 as shown in FIG. 2B so as to be supplied into the gas passageway 20. Upon gasification of the liquid flavor source 34 within the outlet port 36a by the heating with the heater 42, the liquid flavor source 34 is newly supplied from the liquid container 32 into the outlet port 36a of the capillary tube 36 by the capillary force of the capillary tube 36, as shown in FIG. 2C. In this fashion, supply and gasification of the liquid flavor source 34

	are repeated within the outlet port 36a of the capillary tube 36." *Id.* at 7:57-8:5. "The free space between the outlet portion 36b of the capillary tube 36 and the inhalation port 22 can act as a cooling chamber 21 which constitutes a part of the gas passageway. Corresponding to the cooling chamber 21, an outer air introduction hole 26 is formed through the ceiling of the upper chamber 121 to permit the outer air to be introduced into the cooling chamber 21. A gas containing a flavor, which is formed by the heating of the liquid flavor source with a heater 42, is mixed with the outer air within the cooling chamber 21 so as to be cooled and, then, flows to reach the inhalation port 22." *Id.* at 5:1-11. Ex. 1002 at ¶67.

l. "a liquid-supply within the housing"

As illustrated in annotated figure and claim chart below, Takeuchi discloses this feature. The Board previously construed the term "liquid-supply" to mean "the liquid itself." Ex. 1011 at p. 11. Takeuchi discloses a liquid-supply (liquid flavor source 34) contained in liquid container 32 within the lower chamber 122 of the housing (casing 12). Ex. 1003 at 5:28-46; Ex. 1002 at ¶68.

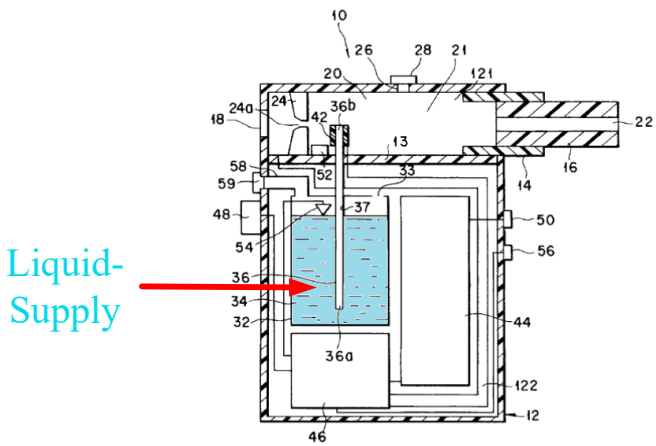

Ex. 1003 at Fig. 1 (Annotated)

Further, even if "liquid supply" was interpreted as a "store for liquid" (it should not be), the limitation is met by the liquid container 32 where the liquid supply is stored. Ex. 1002 at 68.

Claim 1.[l]	**Takeuchi**
a liquid-supply within the housing; and	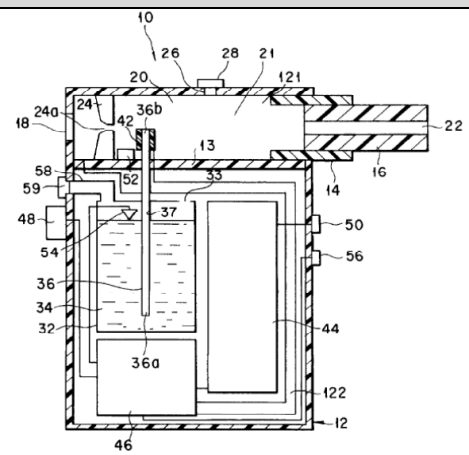 Ex. 1003 at Fig. 1. "On the other hand, the liquid container 32 housing a liquid flavor source 34 is fixed within the lower chamber 122 of the casing 12. The liquid flavor source 34 is housed in the container 32 in an amount conforming with a plurality of puffs of a user. The liquid flavor

	source 34 contains at least a flavor substance. However, in order to add smoke to the flavor, it is possible for the liquid flavor source 34 to contain a substance forming aerosol when heated. As a substance for forming an aerosol, it is possible to use alcohols, sugars, water and a mixture of at least two of these materials. The alcohols used in the present invention include, for example, glycerin, propylene glycol, and a mixture thereof. To be more specific, it is possible for the liquid flavor source 34 to contain extracts from various natural products and/or components thereof depending on the use of the flavor-generating device. For example, where the device is used as a simulated smoking article, it is possible for the liquid flavor source 34 to contain tobacco components such as tobacco extracts and a tobacco smoke condensate." *Id.* at 5:28-46. Ex. 1002 at ¶68.

m. "an aerosol passage leading from the atomizer to the mouthpiece"

As illustrated in annotated figure and claim chart below, Takeuchi discloses this feature. As discussed in Section VI.E.1.i above, Takeuchi discloses an atomizer that includes at least a heater 42 and capillary tube 36 with outlet port 36b, where the liquid is turned into aerosol. As discussed in Section VI.E.1.j above, Takeuchi discloses gas passageway 20 that runs through the upper chamber 121 to the user. Ex. 1003 at 4:33-35, 50-52. Therefore, as shown below, Takeuchi

discloses that an aerosol passage that runs from around the squeeze hole 24a and heater 42 to the outlet (inhalation port 22) to the user via the mouthpiece 16 within the upper chamber 121. *Id.* at 4:50-52, 5:1-4, 4:63-67; Ex. 1002 at ¶69.

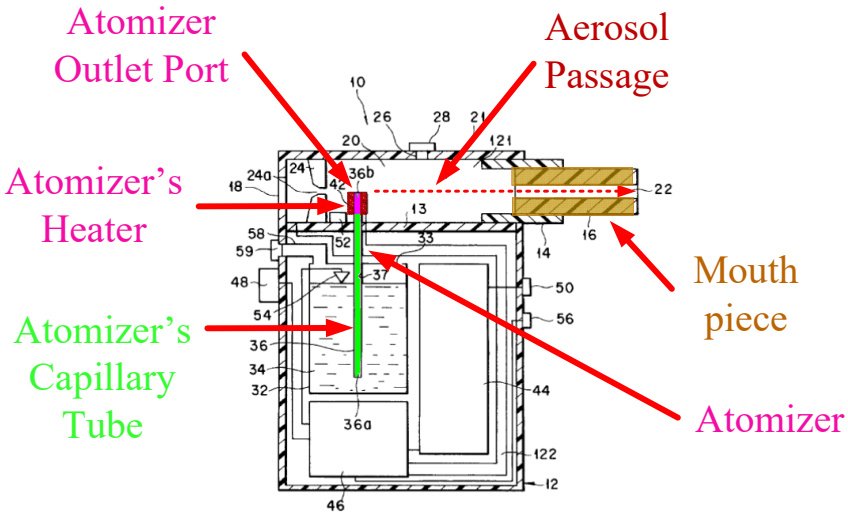

Ex. 1003 at Fig. 1 (Annotated)

Claim 1.[m]	Takeuchi
an aerosol passage leading from the atomizer to the mouthpiece; and	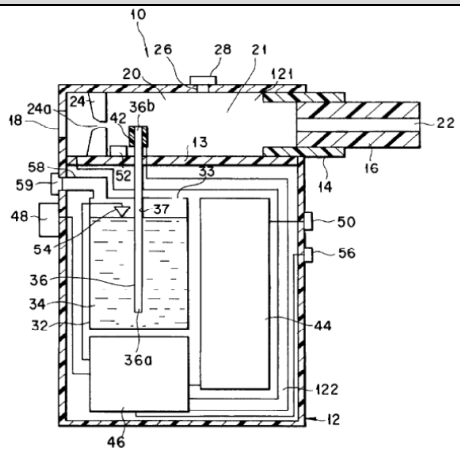 Ex. 1003 at Fig. 1. "As will be described herein later, the upper chamber 121 is used as a gas passageway 20 for forming a gaseous stream of a flavor which is to be inhaled by a user." *Id.* at 4:33-35.

	"The gas passageway 20 is defined within the upper chamber 121 of the casing 12, between the air intake port 18 and the inhalation port 22." *Id.* at 4:50-52. "The squeeze hole 24a of the squeeze plate 24 act to regulate or direct the air introduced from the intake port 18 selectively toward a outlet portion 36b of a capillary tube 36 described in detail below." *Id.* at 4:63-67. "The free space between the outlet portion 36b of the capillary tube 36 and the inhalation port 22 can act as a cooling chamber 21 which constitutes a part of the gas passageway." *Id.* at 5:1-4. Ex. 1002 at ¶69.

n. "with the liquid-supply in physical contact with the atomizer"

As illustrated in annotated figure and claim chart below, Takeuchi discloses this feature. The Board previously construed the term "physical contact" to mean "direct contact." Ex. 1009 at pp. 8-9. As discussed in Section VI.E.1.i above, Takeuchi discloses an atomizer that includes at least a heater 42 which forms outlet port 36b and a capillary tube 36 with a lower end 36a. As discussed in Section VI.E.1.l above, Takeuchi discloses a liquid-supply (liquid flavor source 34). Takeuchi discloses that the capillary tube 36, a part of the atomizer, projects into (much like the bulge 36 projects into the liquid supply of the 331 patent) and thus

is in direct contact with the liquid-supply (liquid flavor source 34) as shown in annotated Fig. 1 below (both as it first projects into the liquid supply and as it contacts the liquid). Ex. 1003 at 5:47-52 ("The capillary tube 36 for transporting the liquid flavor source by the capillary force is inserted within the liquid container."), Fig. 1; Ex. 1002 at ¶70. *Compare* Ex. 1001, 331 patent at 2:45-46, 3:61-64, Figs. 1, 6.

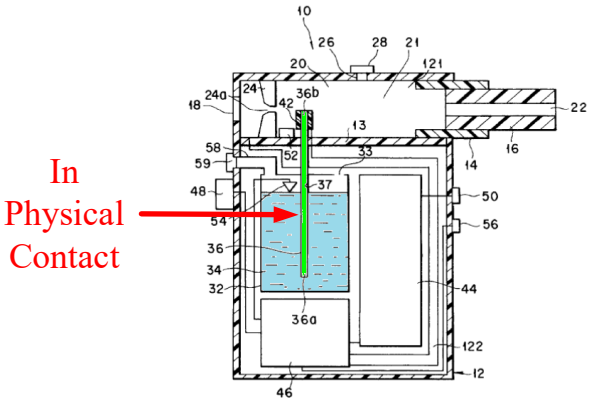

Ex. 1003 at Fig. 1 (Annotated)

Additionally, the liquid is also in direct contact with the capillary tube and the heater as it travels up the tube and into the outlet port 36b. For example, , Figs. 2A and 2C (annotated below) show the liquid supply (liquid flavor source 34) in direct contact with both the heater 42 and the capillary tube 36. Ex. 1003 at 7:57-8:4; Ex. 1002 at ¶70.

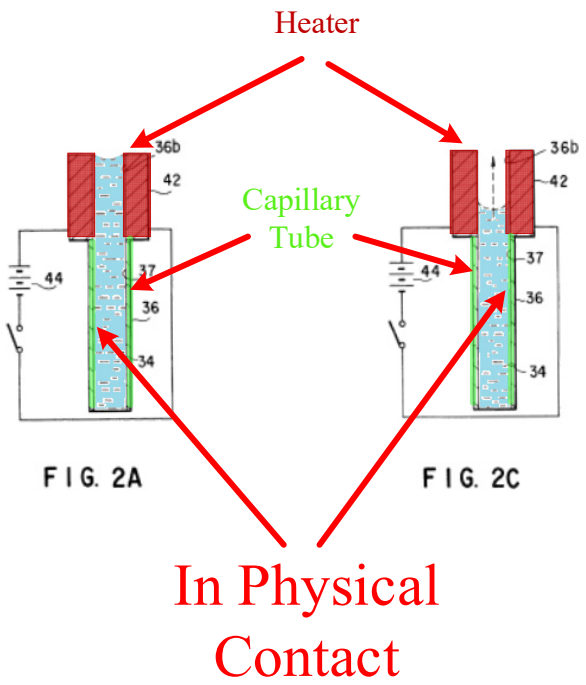

Ex. 1003 at Figs. 2A and 2C (Annotated)

A PHOSITA would have understood that the liquid in the Fig. 4 embodiment will also be in direct contact with the capillary tube 36 and rod-like heater 74 as it moves up the tube by capillary action. Ex. 1002 at ¶70. Therefore, like the Board previously held, "Takeuchi teaches an atomizer in [physical] contact with a liquid supply by virtue of capillary tube 36 extending into and being in direct contact with liquid 34". Ex. 1011 at pp. 17-18.

Further, even if "liquid supply" was interpreted as a "store for liquid" (it should not be), Takeuchi teaches the liquid-supply (liquid container 32) in physical contact with the atomizer. Ex. 1002 at ¶70. For example, the capillary tube 36, which is the part of the atomizer that "that transfers liquid from the 'liquid-

supply'" to "the components that cause atomization," is shown in the embodiments as being in physical contact with the liquid container 32. Ex. 1003 at Figs. 1, 6-7; Ex. 1002 at ¶70.

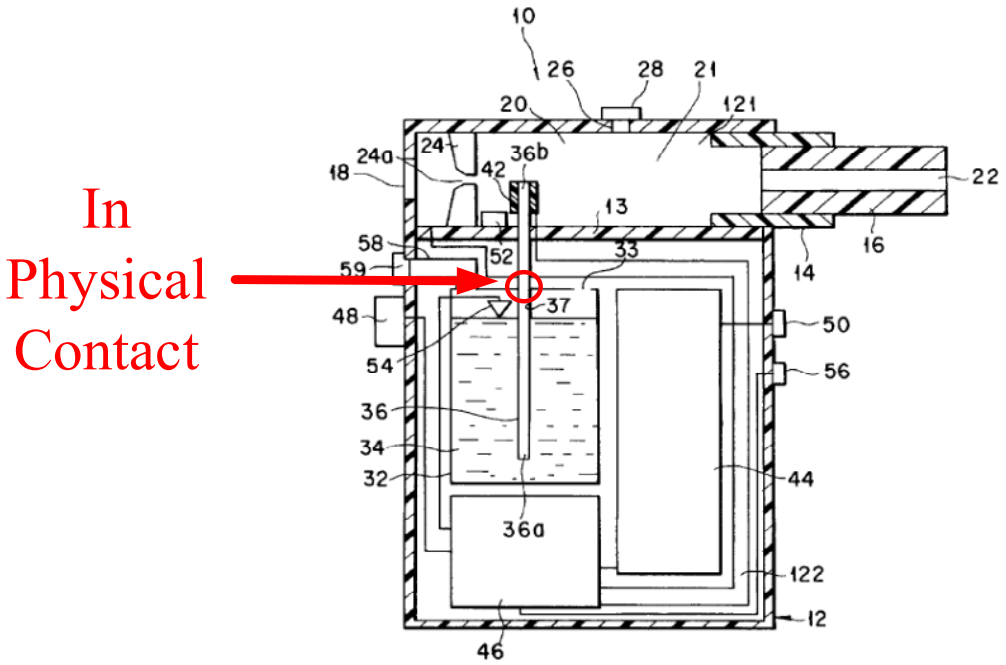

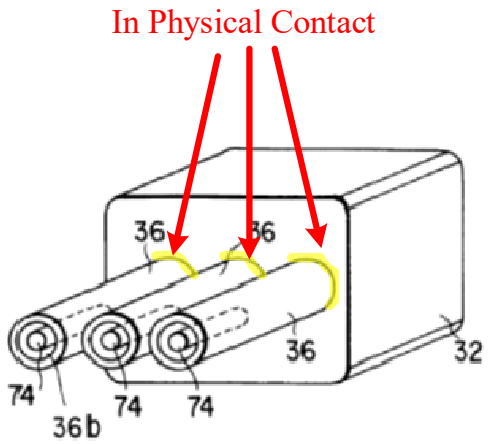

FIG. 6

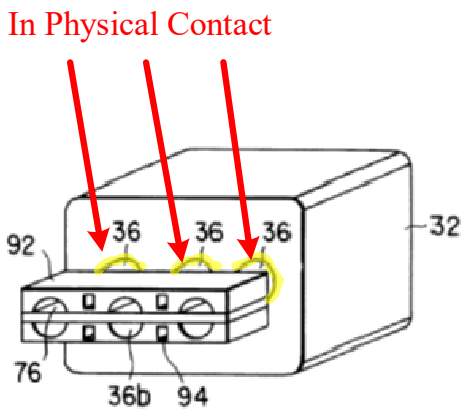

FIG. 7

Ex. 1003 at Figs. 1, 6-7 (Annotated)

Claim 1.[n]	Takeuchi
with the liquid-supply in physical contact with the atomizer; and	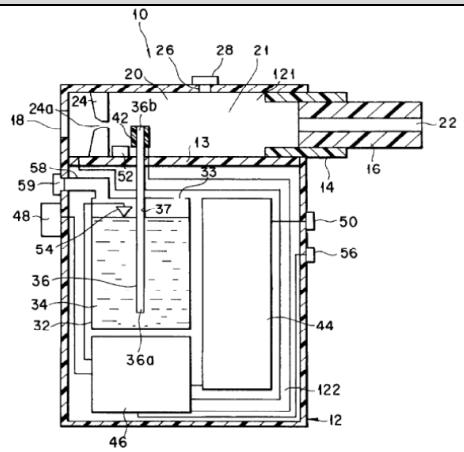 Ex. 1003 at Fig. 1.

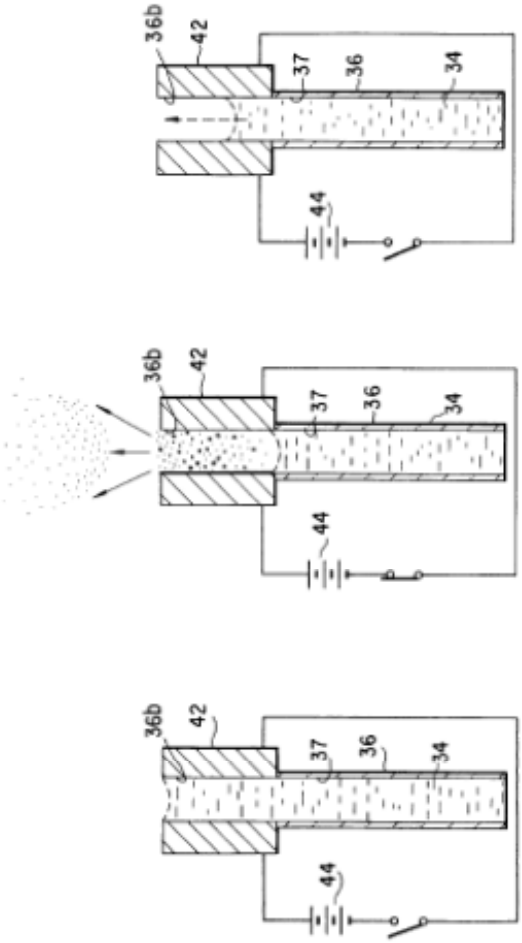

FIG. 2A

FIG. 2B

FIG. 2C

Id. at Figs. 2A-2C.

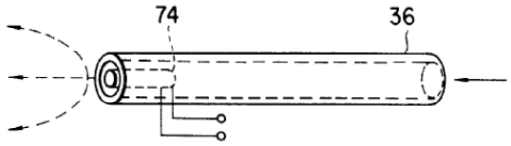

FIG. 4

	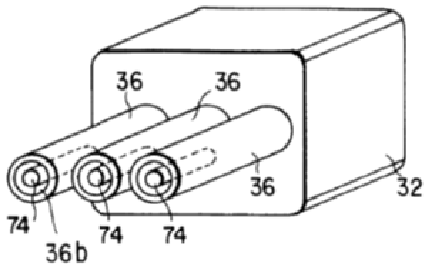 FIG. 6 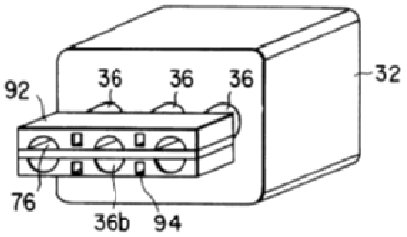 FIG. 7 *Id.* at Figs. 4, 6-7. "The capillary tube 36 for transporting the liquid flavor source by the capillary force is inserted within the liquid container. The capillary tube 36 defines a liquid passageway 37 for the liquid flavor source, and its lower end 36a is positioned in the vicinity of the bottom of the liquid container 32." *Id.* at 5:47-52. Ex. 1002 at ¶70.

o. "a heating element within the cavity"

As illustrated in annotated figure and claim chart below, Takeuchi discloses "a heating element within the cavity." As discussed in Section VI.E.1.k above,

Takeuchi discloses two different cavities in an atomizer: the interior of the tube 36 at outlet portion 36b; and the upper chamber by the squeeze plate hole 24a and heater 42. Both cavities have a heating element inside them. Specifically, Takeuchi discloses a heating element (heater 42), a part of the atomizer, in many different embodiments. For example, as discussed in Section VI.E.1.i above, Takeuchi teaches one embodiment as a "rod-like heater 74" serving as a heating element that is inserted into the cavity (outlet port 36b). Ex. 1003 at 8:22-23 ("a rod-like heater 74 is inserted into the outlet port 36[b] of the capillary tube 36"); Ex. 1002 at ¶71. The annotated Fig. 1 below depicts the use of the "rod-like heater 74," shown in Fig. 4, within capillary tube 36. Takeuchi therefore teaches a heating element (heater 42/74) within the cavity (outlet portion 36b). *Id.*

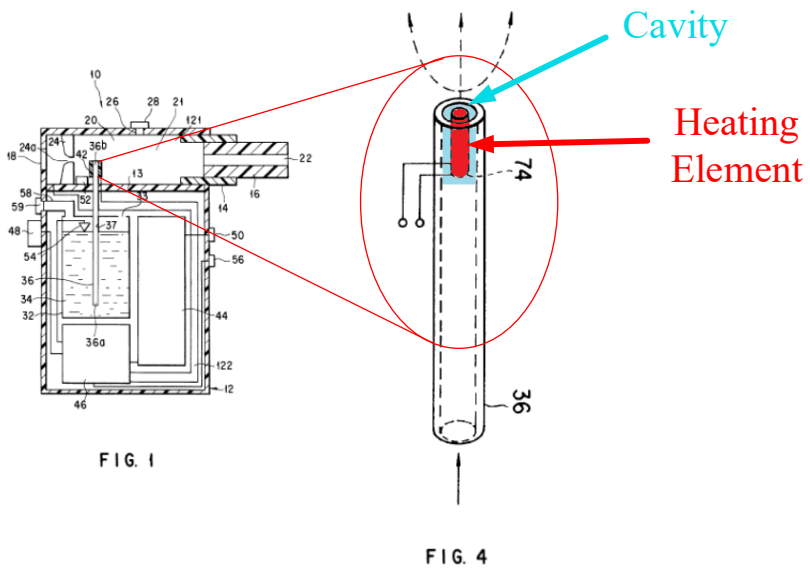

Ex. 1003, Takeuchi at Figs. 1 and 4 (Annotated)

Similarly, Figs. 5 and 6 show a heating element located inside the outlet port of the capillary tube. Ex. 1003 at 8:24-26, 33-36, Figs. 5-6; Ex. 1002 at ¶71.

Alternatively, as discussed in Section VI.E.1.k above, Takeuchi discloses a second cavity within the upper chamber 121 which is part of the atomizer (the area around the squeeze plate hole 24a and heater 42). In the Fig. 15 embodiment, Takeuchi discloses that a heater 425 is provided on the protruded end of an intercommunicating pore structure 302 (Ex. 1003 at 10:59-63, Fig. 15), where the intercommunicating pore structure is within this second, alternative cavity of the atomizer. *Id.* at Figs. 1, 15, 5:47-52, 6:4-7; Ex. 1002 at ¶71. Similarly, in the Fig. 1 embodiment, the heater 42 is mounted on the end of the tube 36 in the second atomizer cavity. Ex. 1003 at Figs. 1, 15, 5:47-52, 6:4-7; Ex. 1002 at ¶71. Takeuchi therefore teaches a heating element (heater 425 in Fig. 15 or heater 42 in Fig. 1) within the second cavity. Ex. 1002 at ¶71.

Claim 1.[o]	**Takeuchi**
a heating element within the cavity.	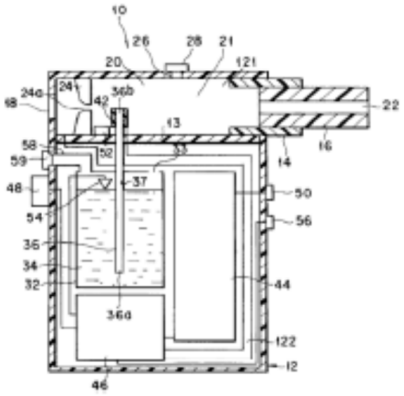 Ex. 1003 at Fig. 1.

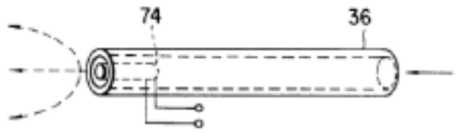

FIG. 4

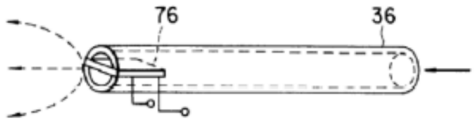

FIG. 5

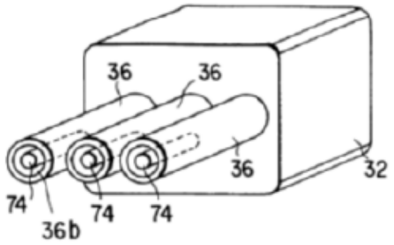

FIG. 6

Id. at Figs. 4-6.

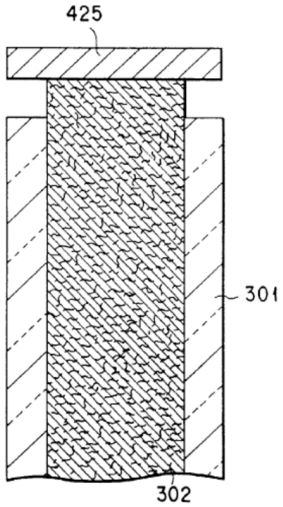

Id. at Fig. 15.

	"In the modification shown in FIG. 4, a rod-like heater 74 is inserted into the outlet port 36a of the capillary tube 36." *Id.* at 8:22-23. "Further, as shown in FIG. 15, the intercommunicating pore structure 302 may protrude from the enclosure 301. In such a case, a heater 425 can be provided on the protruded end of the intercommunicating pore structure 302." *Id.* at 10:59-63. "The capillary tube 36 for transporting the liquid flavor source by the capillary force is inserted within the liquid container. The capillary tube 36 defines a liquid passageway 37 for the liquid flavor source, and its lower end 36a is positioned in the vicinity of the bottom of the liquid container 32." *Id.* at 5:47-52. "The upper end portion of the capillary tube 36 protrudes into the upper chamber 121 of the casing 12 somewhat downstream of the squeeze plate 24 and is equipped with the heater 42 serving to gasify the liquid flavor source 34. In the embodiment shown in FIG. 1, the heater 42 consists of a tubular body mounted to the capillary tube 36 and having an inner diameter equal to that of the capillary tube 36. In other words, the outlet port 36a of the liquid passageway 36 is formed by the heater 42 itself." *Id.* at 6:4-12. Ex. 1002 at ¶71.

2. Claim 2 Is Anticipated by Takeuchi

a. "An electronic cigarette, comprising"

For the reasons discussed in Section VI.E.1.a above, to the extent that the preamble is limiting, Takeuchi discloses this limitation. Ex. 1002 at ¶72.

b. "a housing"

For the reasons discussed in Section VI.E.1.b above, Takeuchi discloses this limitation. Ex. 1002 at ¶73.

c. "a mouth piece on the housing"

For the reasons discussed in Section VI.E.1.c above, Takeuchi discloses this limitation. Ex. 1002 at ¶74.

d. "an LED at a first end of the housing"

For the reasons discussed in Section VI.E.1.d above, Takeuchi discloses this limitation. Ex. 1002 at ¶75.

e. "an air inlet for providing air into the housing"

For the reasons discussed in Section VI.E.1.e above, Takeuchi discloses an air inlet for providing air into the housing, namely, the inlet provides air into the upper chamber 121. Ex. 1002 at ¶76.

f. "a battery and a sensor electrically connected to an electronic circuit board within the housing, with the sensor in a stream passage in the housing"

For the reasons discussed in Sections VI.E.1.f, g, h, j above, Takeuchi discloses a battery, a sensor, an electronic circuit board within the housing, and a stream passage in the housing. Ex. 1002 at ¶77.

Takeuchi further discloses that the battery (power source 44) and the sensor (sensor 52) are electrically connected to the electronic circuit board (control circuit 46). Ex. 1003 at 7:51-56 ("As a result, an inhaling action signal is transferred from the sensor 52 to the control circuit 46. Then, under the control of the control circuit 46, an electric power is supplied from the power source 44 to the heater 42 so as to turn the heater 42 on."), Fig. 1; Ex. 1002 at ¶77. As illustrated in annotated Fig. 1 below, the sensor is located in the stream passage. Ex. 1003 at 6:46-54 ("The sensor 52 for detecting the inhaling action of the user is arranged within the upper chamber 121 of the casing 12 …"), Fig. 1; Ex. 1002 at ¶77.

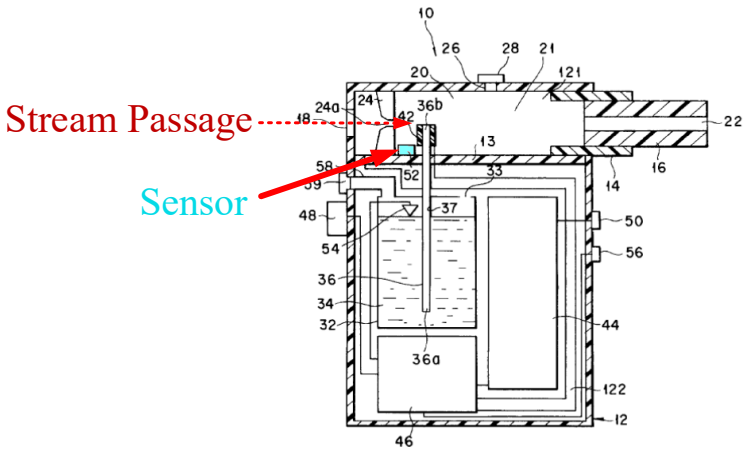

Ex. 1003 at Fig. 1 (Annotated)

Claim 2.[f]	Takeuchi
a battery and a sensor electrically connected to an electronic circuit board within the housing, with the sensor in a stream passage in the housing;	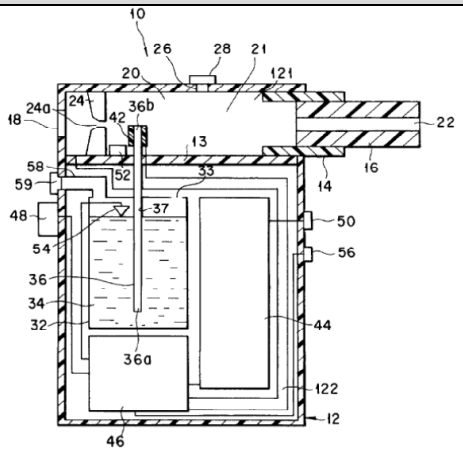 Ex. 1003 at Fig. 1. "As a result, an inhaling action signal is transferred from the sensor 52 to the control circuit 46. Then, under the control of the control circuit 46, an electric power is supplied from the power source 44 to the heater 42 so as to turn the heater 42 on." *Id*. at 7:51-56. "The sensor 52 for detecting the inhaling action of the user is arranged within the upper chamber 121 of the casing 12, and is positioned between the squeeze plate 24 and the heater 42. It is possible to use as the sensor 52 a general pressure sensor for detecting a change in the pressure within the chamber 121 as a change in electrical resistance, as a change in electrical capacitance or as a piezoelectric electromotive force, or a rocking vane type sensor for detecting a gas stream within the chamber 121." *Id.* at 6:46-54. *Also see* Sections VI.E.1.f, g, h, j above. Ex. 1002 at ¶77.

g. "an atomizer within the housing, with the atomizer having a heating element within a cavity, and with the atomizer making contact with a liquid-supply, to provide for movement of liquid to the atomizer via capillary action"

For the reasons discussed in Sections VI.E.1.l, i, n, o above, Takeuchi discloses an atomizer within the housing, with the atomizer having a heating element (heater 42 or rod-like heater 74) within a cavity, and with the atomizer making contact with a liquid-supply to provide for movement of liquid to the atomizer via capillary action. Ex. 1002 at ¶78.

As described above, Takeuchi discloses that the liquid (liquid flavor source 34) is transported by the capillary tube 36 via capillary force (*i.e.*, capillary action) to outlet portion 36b of the atomizer. Ex. 1003 at 5:47-52, 2:17-25; Ex. 1002 at ¶78.

Takeuchi therefore teaches that an atomizer (including at least capillary tube 36, outlet portion 36b, heater 42 or rod-like heater 74) within the housing (casing 12, upper chamber 121, and lower chamber 122), with the atomizer having a heating element (heater 42 or rod-like heater 74) within a cavity (outer portion 36b or larger cavity within upper chamber 121), and with the atomizer making contact

with a liquid-supply (liquid flavor source 34)[4], to provide for movement of liquid to the atomizer via capillary action. Ex. 1002 at ¶78.

Claim 2.[g]	**Takeuchi**
an atomizer within the housing, with the atomizer having a heating element within a cavity, and with the atomizer making contact with a liquid-supply, to provide for movement of liquid to the atomizer via capillary action;	"The capillary tube 36 for transporting the liquid flavor source by the capillary force is inserted within the liquid container. The capillary tube 36 defines a liquid passageway 37 for the liquid flavor source, and its lower end 36a is positioned in the vicinity of the bottom of the liquid container 32." Ex. 1003 at 5:47-52. "In the flavor-generating device of the present invention, a liquid containing a flavor substance, i.e., a liquid flavor source, is transported from within a liquid container through the liquid passageway by a capillary force exerted by the liquid passageway. Thus, if the preceding liquid flavor source is gasified or evaporated at the outlet end portion of the liquid passageway, the succeeding liquid flavor source is supplied to the outlet end portion of the liquid passageway by the capillary force." *Id.* at 2:17-25. *Also see* Sections VI.E.1. l, i, n, o above. Ex. 1002 at ¶78.

[4] As explained in Claim 1.[n] above, even if the liquid supply is the store for liquid (it is not), the capillary tube 36 of the atomizer is in physical contact with the liquid container 32.

h. "an aerosol passage extending from the atomizer to the mouthpiece"

For the reasons discussed in Section VI.E.1.m above, Takeuchi discloses an aerosol passage extending from the atomizer to the mouthpiece. Ex. 1002 at ¶79.

F. GROUND 2: CLAIMS 1-2 OF THE 331 PATENT ARE UNPATENTABLE AS OBVIOUS OVER TAKEUCHI

As discussed above and as the Board previously held, Takeuchi teaches each limitation recited in independent claims 1 and 2, and therefore anticipates these claims. *See* Ex. 1009 at pp. 13-18, 22; Ex. 1011 at pp. 15 (n.12), 16-20.

Nevertheless, to the extent that there is a question about whether control circuit 46 is an "electronic circuit board," it would have been obvious to place control circuit 46 on a circuit board. Ex. 1002 at ¶¶44-45, 52-55, 80. As explained above, Takeuchi discloses a control circuit 46 that includes signal processing and control. Circuit boards for implementing various electronic circuits including those that perform signal processing and control were conventional components of small electronic devices known for decades prior to 2004. *See, e.g.*, Ex. 1016, Ghosh (a method of attaching a microchip to a circuit board patent); Ex. 1031, Wood (an inhaler device patent); Ex. 1018, Bremenour (a memory cartridge for a circuit board patent). A PHOSITA would have known to place the control circuit 46 on a circuit board to achieve the predictable result of supporting and electrically

connecting components of the control circuit 46 to provide signal processing and control. Ex. 1002 at ¶¶44-45, 52-55, 80.

Therefore, claims 1-2 are unpatentable as anticipated by, or at least rendered obvious by, Takeuchi.

VII. CONCLUSION

For the foregoing reasons, there is a reasonable likelihood that Petitioner will prevail in its challenge of patentability for at least one of claims 1-2 of the 331 patent. Petitioner request institution of an *inter partes* review to cancel the challenged claims.

Respectfully submitted,

Dated: March 1, 2018

/s/ Ralph J. Gabric

Ralph J. Gabric (Reg. No. 34,167)
Robert Mallin (Reg. No. 35,596)
Yuezhong Feng (Reg. No. 58,657)
Brinks Gilson & Lione
NBC Tower – Suite 3600
455 N. Cityfront Plaza Dr.
Chicago, Illinois 60611
Attorneys for Petitioner

CERTIFICATE OF COMPLIANCE

The undersigned certifies that this brief complies with the type-volume limitations of 37 CFR § 42.24(a)(1)(i). This brief contains 11,491 words as calculated by the "Word Count" feature of Microsoft Word 2016, the word processing program used to create it.

The undersigned further certifies that this brief complies with the typeface requirements of 37 CFR § 42.6(a)(2)(ii) and typestyle requirements of 37 CFR § 42.6(a)(2)(iii). This brief has been prepared in a proportionally spaced typeface using Microsoft Word 2010 in Times New Roman 14 point font.

DATED: March 1, 2018

BRINKS GILSON & LIONE

By: */s/ Ralph J. Gabric*
Ralph J. Gabric

Lead Counsel for Petitioner
Reg. No. 34,167
Brinks Gilson & Lione
Suite 3600 NBC Tower
455 Cityfront Plaza Drive
Chicago IL 60611-5599
T: 312-321-4200
F: 312-321-4299

CERTIFICATE OF SERVICE

Pursuant to 37 CFR §§ 42.6(e)(4)(i) *et seq.* and 42.105(b), the undersigned certifies that on March 1, 2018, a complete and entire copy of this Petition for *Inter Partes* Review, and all supporting exhibits, were served EXPRESS MAIL® to the Patent Owner by serving the correspondent of record, as indicated below:

Patent Owner's Address of Record:
Perkins Coie LLP - LOS General
P.O. Box 1247
Seattle, WA 98111-1247

Additional Addresses Known as Likely to Effect Service:
Jerry A. Riedinger
Perkins Coie LLP – Seattle
1201 Third Avenue Suite 4900
Seattle, WA 98101-3099

Michael J. Wise
Perkins Coie LLP – Los Angeles
1888 Century Park East Suite 1700
Los Angeles, CA 90067-1721

Dated: March 1, 2018

/s/ James R. Donnelly
Ralph J. Gabric (Reg. No. 34,167)
Robert Mallin (Reg. No. 35,596)
Yuezhong Feng (Reg. No. 58,657)
Brinks Gilson & Lione
NBC Tower – Suite 3600
455 N. Cityfront Plaza Dr.
Chicago, Illinois 60611
Attorneys for Petitioner