United States Patent [19]

Counts et al.

[11] **Patent Number: 5,060,671**

[45] **Date of Patent: Oct. 29, 1991**

[54] **FLAVOR GENERATING ARTICLE**

[75] Inventors: **Mary E. Counts; Bernard C. LaRoy; D. Bruce Losee, Jr.,** all of Richmond; **Constance H. Morgan; Ulysses Smith,** both of Midlothian; **F. Murphy Sprinkel, Jr.,** Glen Allen; **Francis V. Utsch,** Midlothian, all of Va.

[73] Assignee: **Philip Morris Incorporated,** New York, N.Y.

[21] Appl. No.: **444,746**

[22] Filed: **Dec. 1, 1989**

[51] **Int. Cl.**[5] **A24K 47/00**

[52] **U.S. Cl.** **131/329;** 131/273; 128/202.21; 128/203.17; 128/203.27

[58] **Field of Search** 131/270, 273, 194–197, 131/359, 369; 128/202, 202.21, 203.17, 203.27

[56] **References Cited**

U.S. PATENT DOCUMENTS

1,771,366	7/1930	Wyss et al. .	
1,968,509	7/1934	Tiffany .	
2,057,353	10/1936	Whittemore, Jr. .	
2,104,266	1/1938	McCornick	131/273
2,442,004	5/1948	Hayward-Butt .	
2,974,669	3/1961	Ellis .	
3,280,819	8/1965	Gilbert .	
3,363,633	1/1968	Weber .	
3,402,723	9/1968	Hu .	
3,482,580	12/1969	Hollabaugh .	
3,804,100	4/1974	Fariello .	
3,889,690	6/1975	Guarnieri .	
4,016,061	4/1977	Wasa et al. .	
4,068,672	1/1978	Guerra .	
4,077,784	3/1978	Vayrynen .	
4,131,119	12/1978	Blasutti .	
4,141,369	2/1979	Burruss .	
4,164,230	8/1979	Pearlman .	
4,193,411	3/1980	Faris et al. .	
4,215,708	8/1980	Bron .	
4,219,032	8/1980	Tabatznik et al. .	
4,246,913	1/1981	Ogden et al. .	
4,256,945	3/1981	Carter et al. .	
4,259,970	4/1981	Green, Jr. .	
4,303,083	12/1981	Burruss, Jr. .	
4,393,884	7/1983	Jacobs .	
4,431,903	2/1984	Riccio .	
4,436,100	3/1984	Green, Jr. .	
4,463,247	7/1984	Lawrence et al. .	
4,562,337	12/1985	Lawrence .	
4,570,646	2/1986	Herron .	
4,580,583	4/1986	Green, Jr. .	
4,621,649	11/1986	Osterrath .	
4,623,401	11/1986	Derbyshire et al. .	
4,637,407	1/1987	Bonanno et al. .	
4,659,912	4/1987	Derbyshire .	
4,735,217	4/1988	Gerth et al.	131/273
4,771,796	9/1988	Myer .	
4,776,353	10/1988	Lilja et al. .	
4,837,421	6/1989	Luthy .	
4,846,199	7/1989	Rose .	
4,848,376	7/1989	Lilja et al. .	
4,874,924	10/1989	Yamamoto et al. .	
4,877,989	10/1989	Drews et al. .	
4,922,901	5/1990	Brooks et al. .	
4,945,931	8/1990	Gori .	
4,947,874	8/1990	Brooks et al. .	
4,947,875	8/1990	Brooks et al. .	

FOREIGN PATENT DOCUMENTS

1202378	3/1986	Canada .
87/104459	2/1988	China .
0295122	12/1988	European Pat. Off. .
0358002	3/1990	European Pat. Off. .
0358114	3/1990	European Pat. Off. .
3640917A1	8/1988	Fed. Rep. of Germany .
3735704A1	5/1989	Fed. Rep. of Germany .
61-68061	4/1986	Japan .
WO86/02528	4/1986	PCT Int'l Appl. .
2132539	7/1984	United Kingdom .
2148079	5/1985	United Kingdom .
2148676	5/1985	United Kingdom .

OTHER PUBLICATIONS

"Excerpt from 'NASA Tech Briefs'," Jul./Aug. 1988, p. 31.

"PTC Thermistors," Keystone Carbon Company product literature.

Primary Examiner—V. Millin

Attorney, Agent, or Firm—Jeffrey H. Ingerman

[57] **ABSTRACT**

An article is provided in which a flavor generating medium is electrically heated to evolve inhalable flavors or other components in vapor or aerosol form. The article has a plurality of charges of the flavor generating medium which are heated sequentially to provide individual puffs.

84 Claims, 10 Drawing Sheets

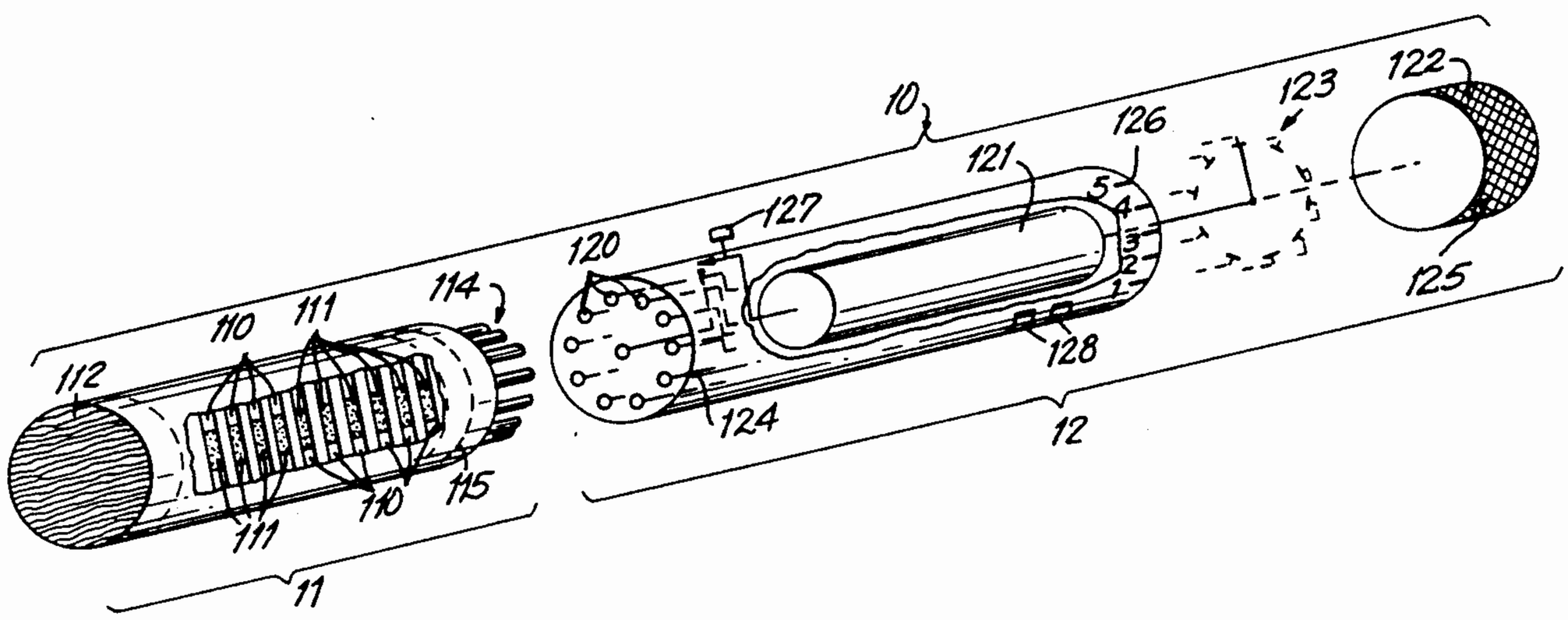

RAI Exhibit 2006
Shenzhen Kangvape v. RAI
IPR2024-01406

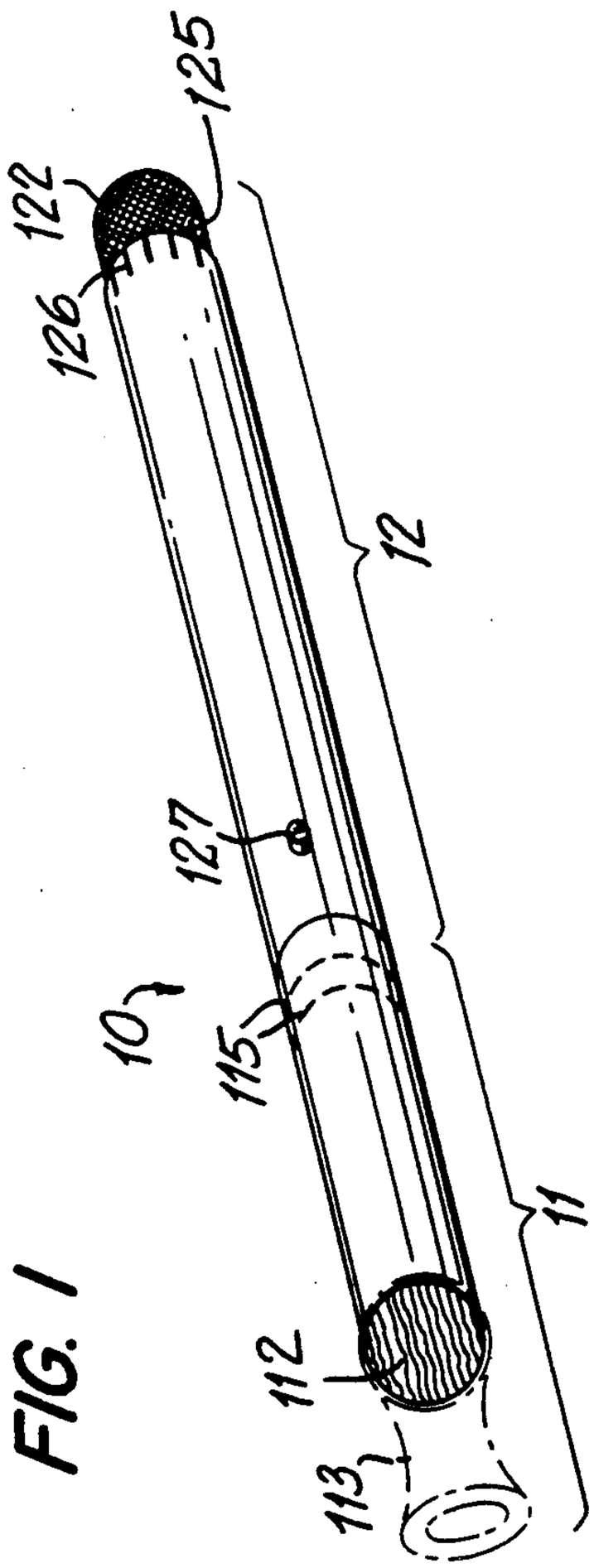

FIG. 1

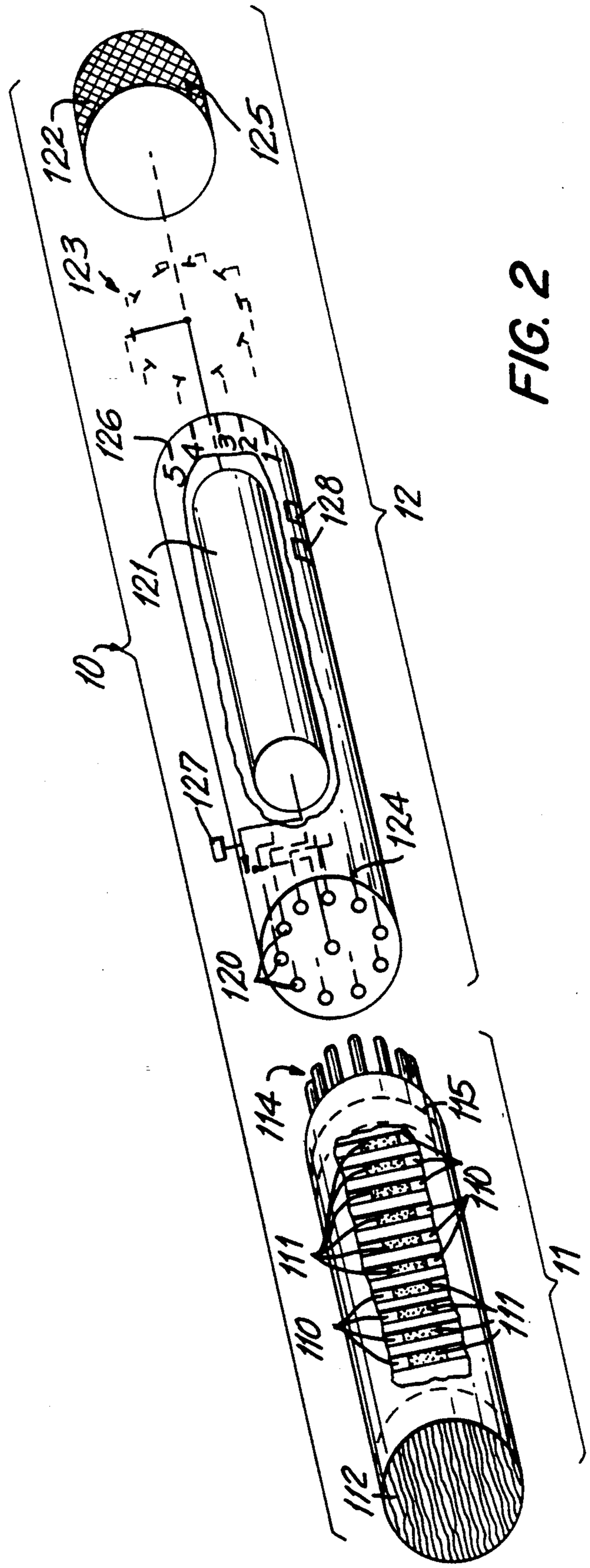

FIG. 2

RAI Exhibit 2006
Shenzhen Kangvape v. RAI
IPR2024-01406

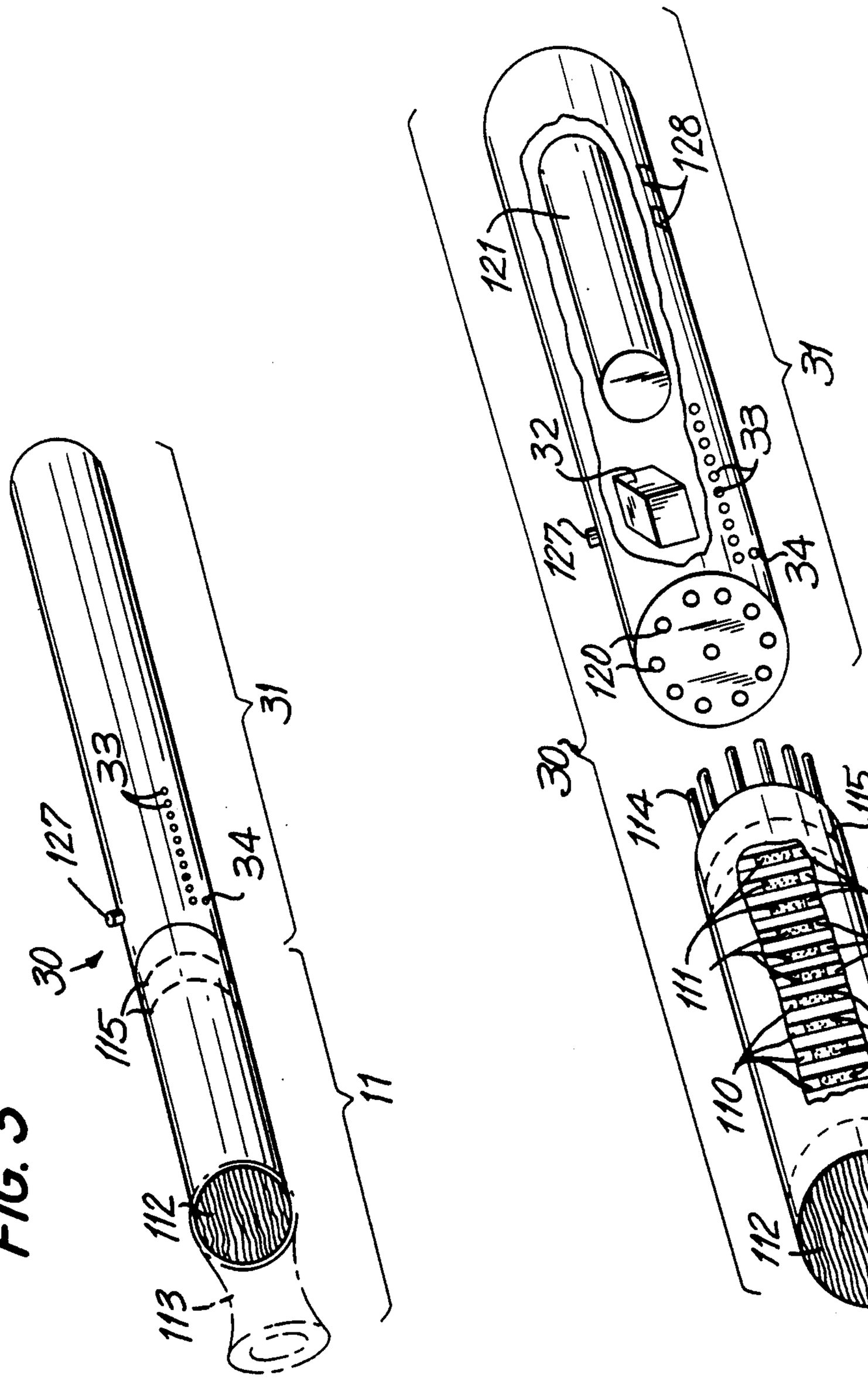

FIG. 4

FIG. 3

RAI Exhibit 2006
Shenzhen Kangvape v. RAI
IPR2024-01406

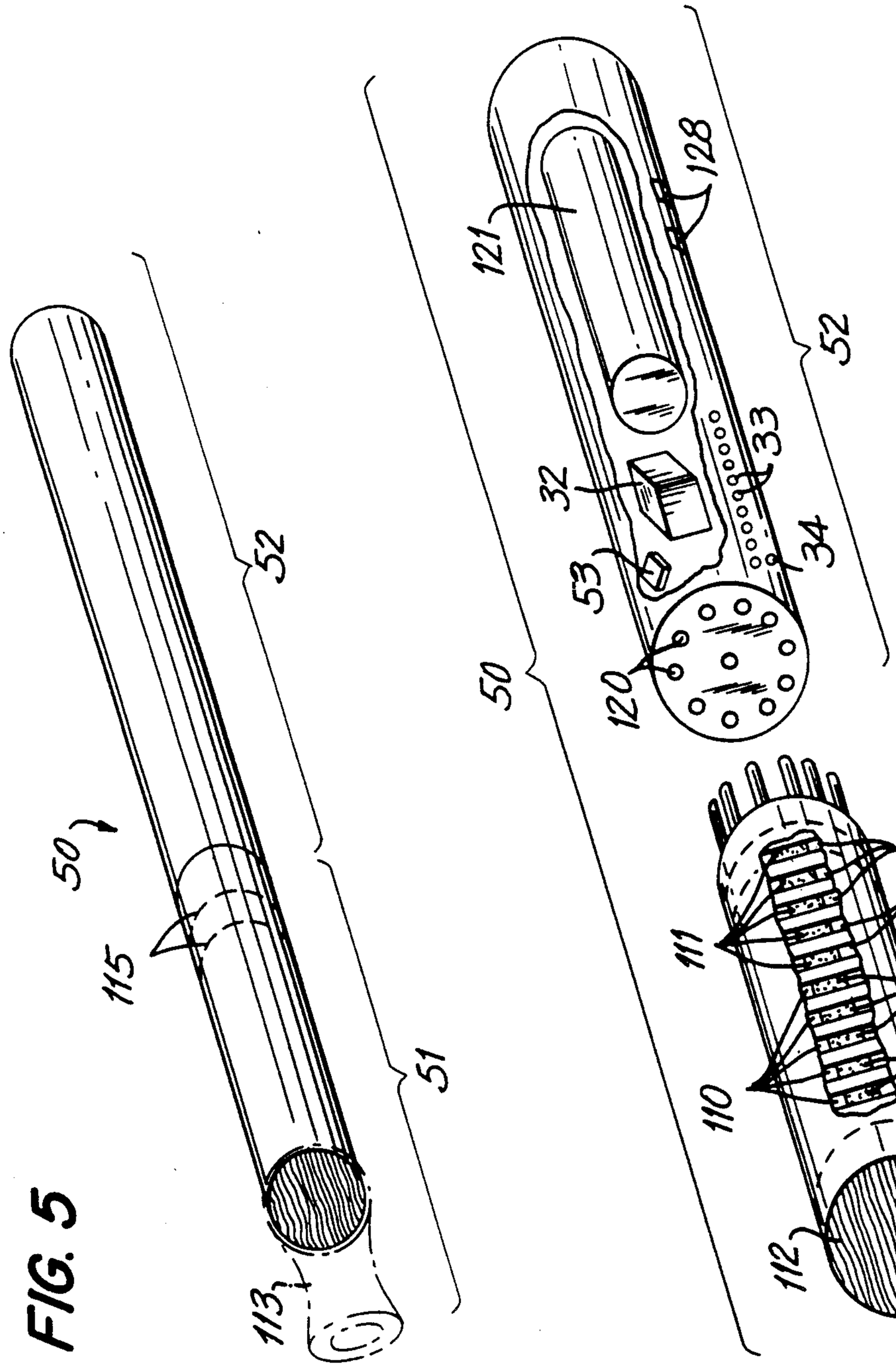
50
52
115
51
113
50
121
128
52
32
33
53
34
120
110
111
111
110
51
112

FIG. 5

FIG. 6

FIG. 7A

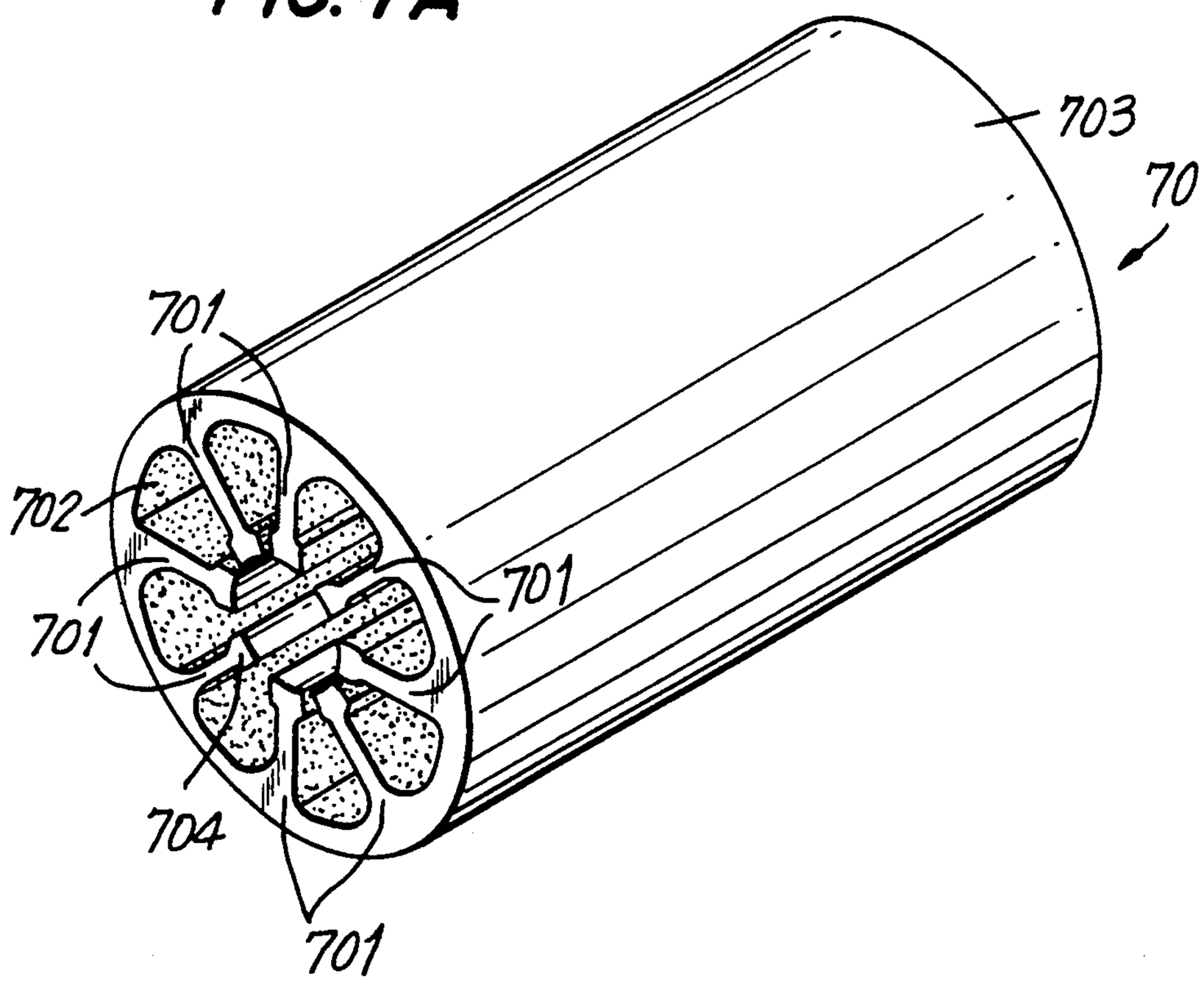

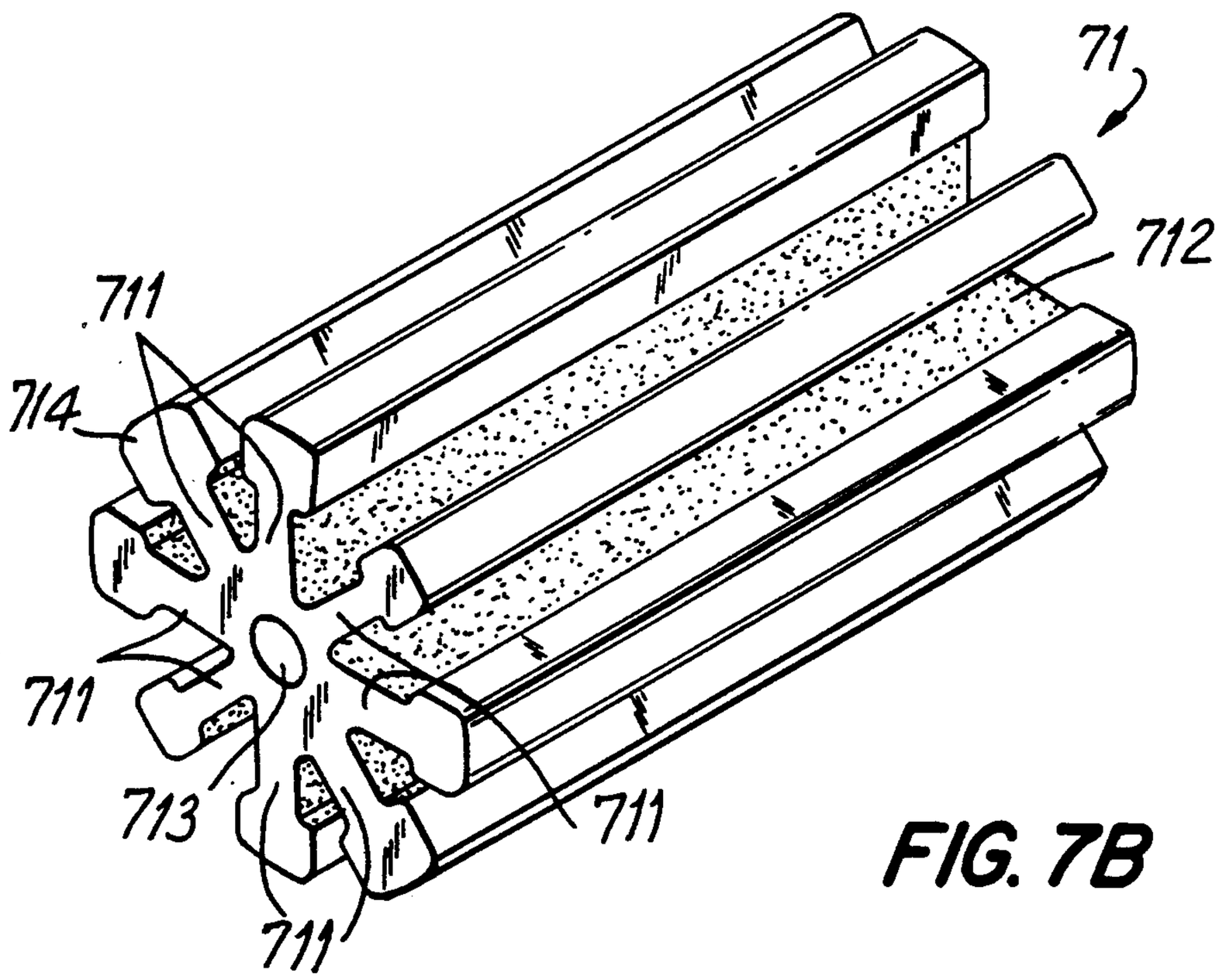

FIG. 7B

RAI Exhibit 2006
Shenzhen Kangvape v. RAI
IPR2024-01406

FIG. 7C

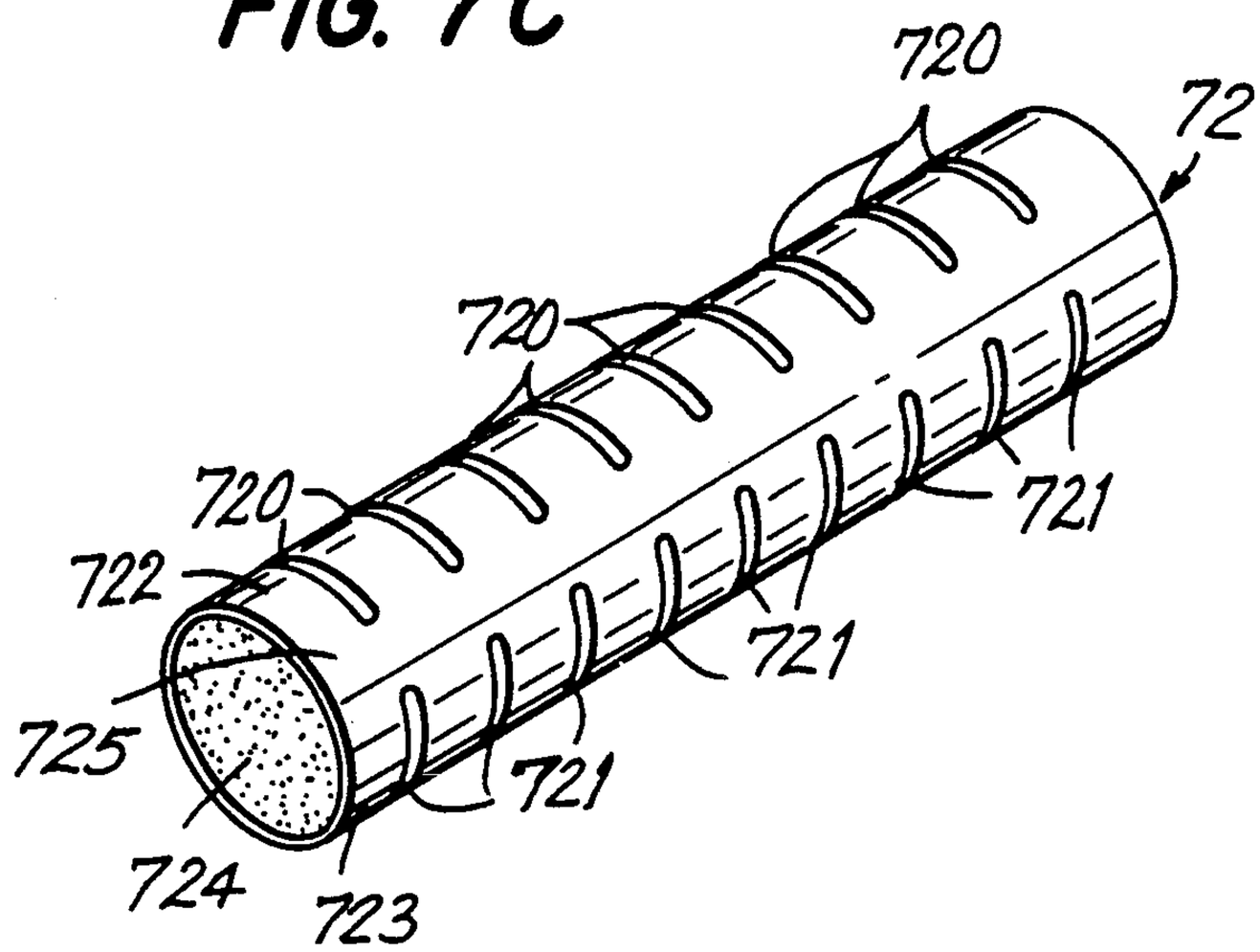

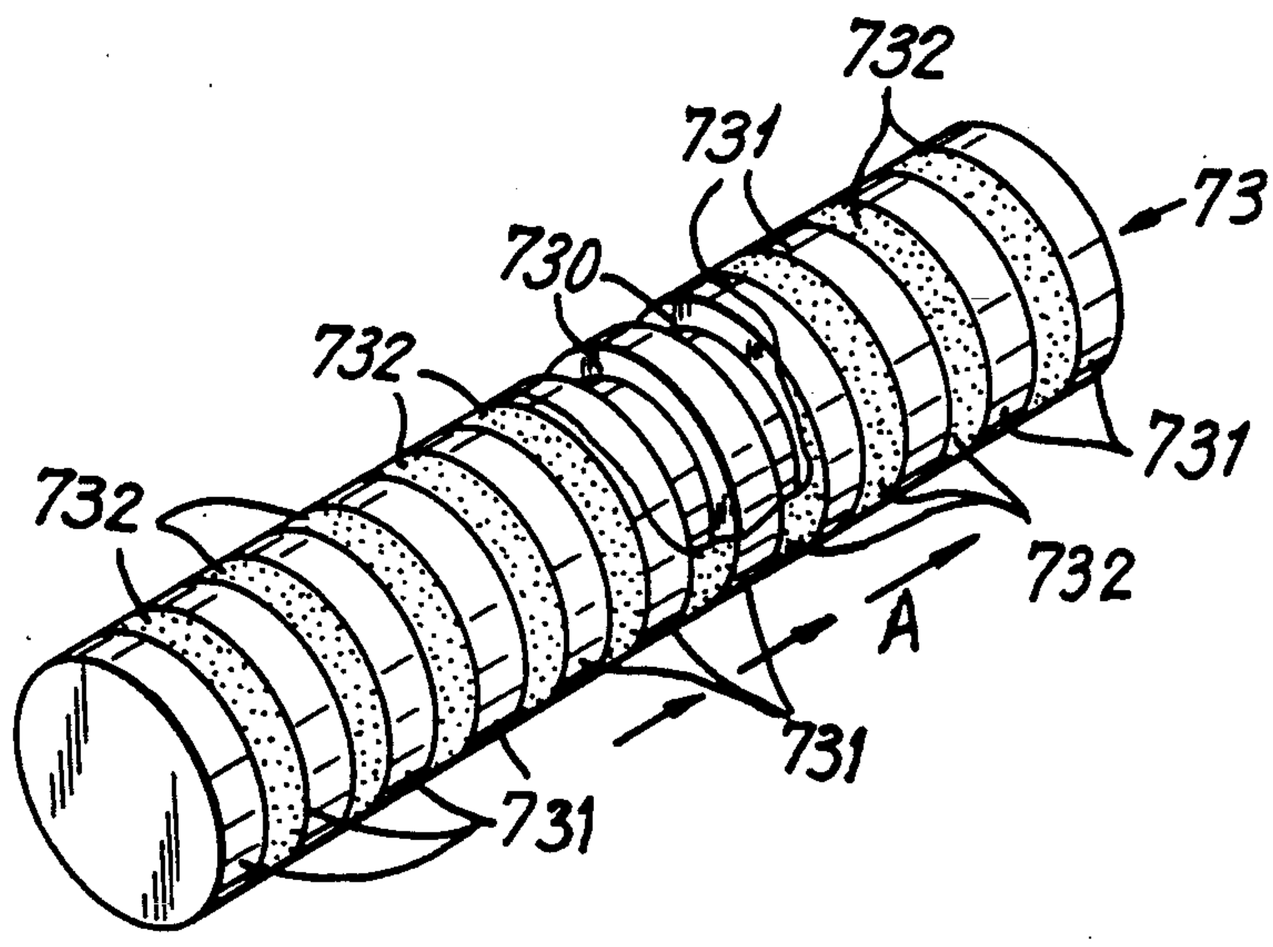

FIG. 7D

RAI Exhibit 2006
Shenzhen Kangvape v. RAI
IPR2024-01406

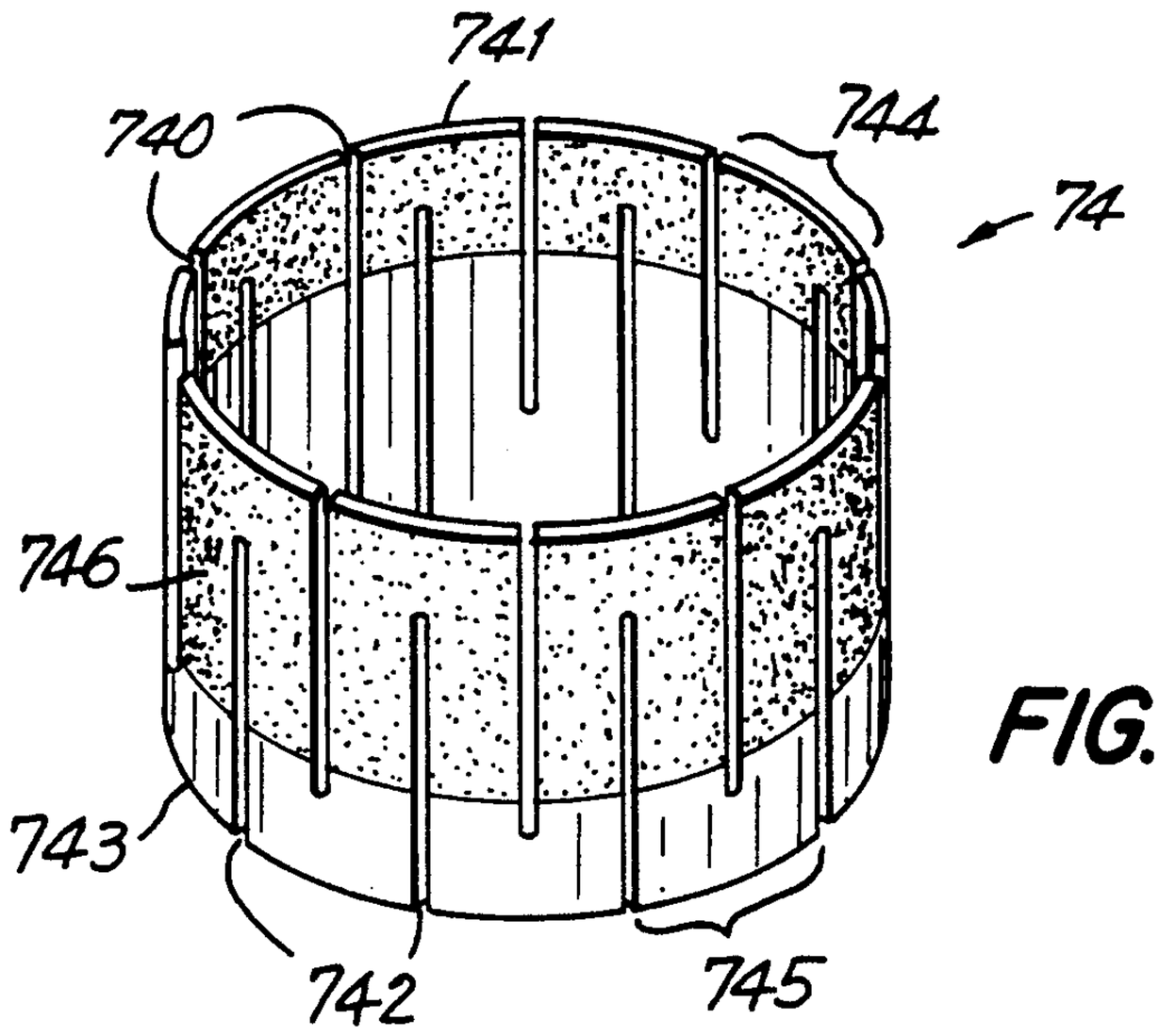

FIG. 7E

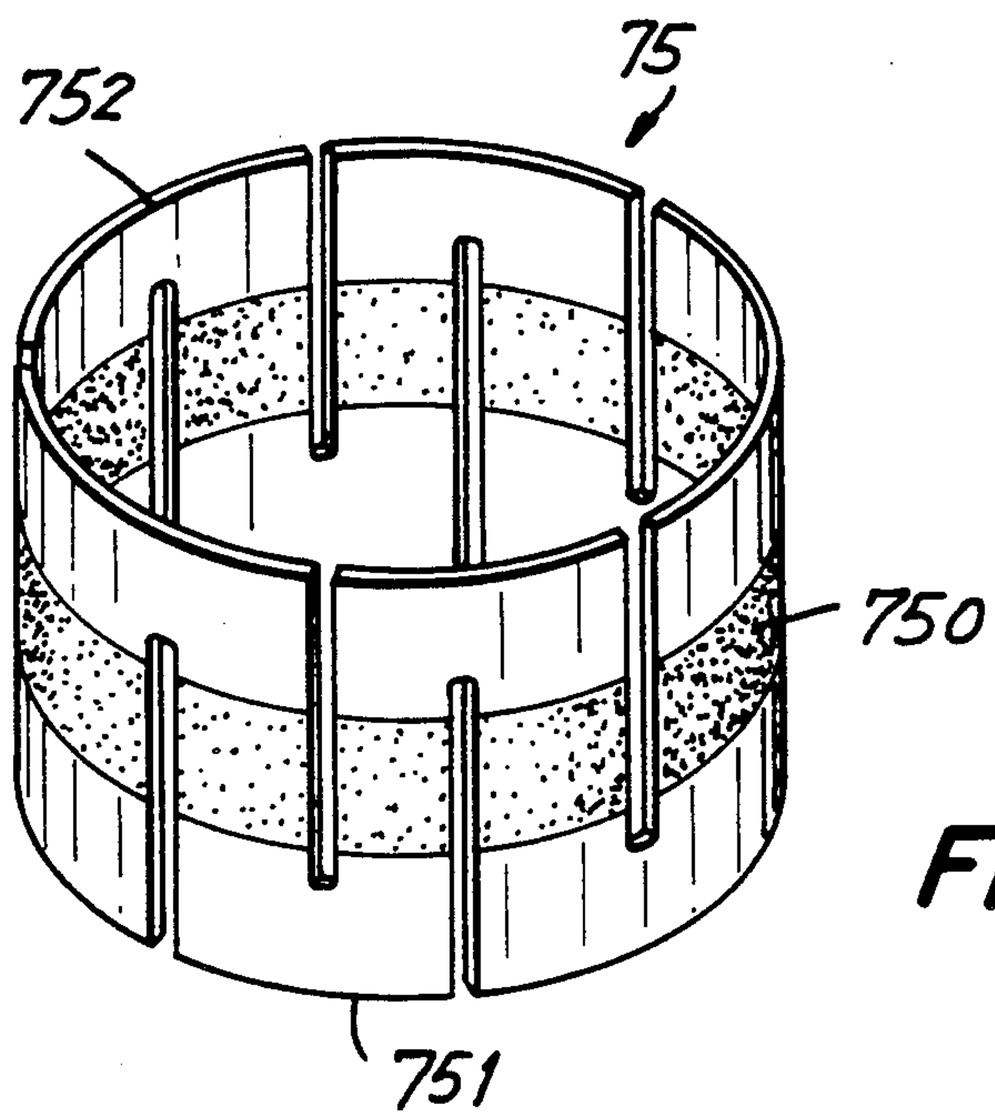

FIG. 7F

RAI Exhibit 2006
Shenzhen Kangvape v. RAI
IPR2024-01406

FIG. 7H

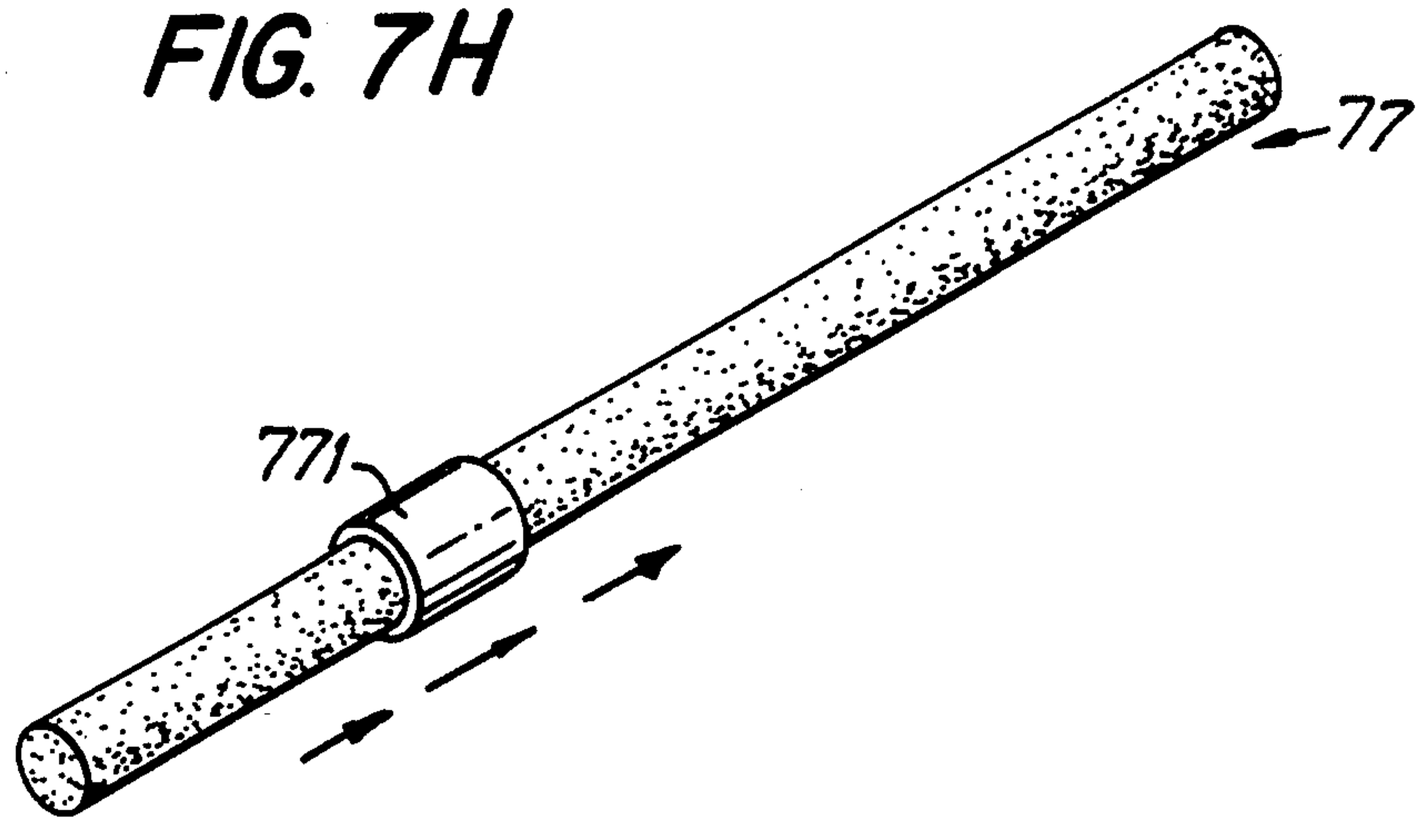

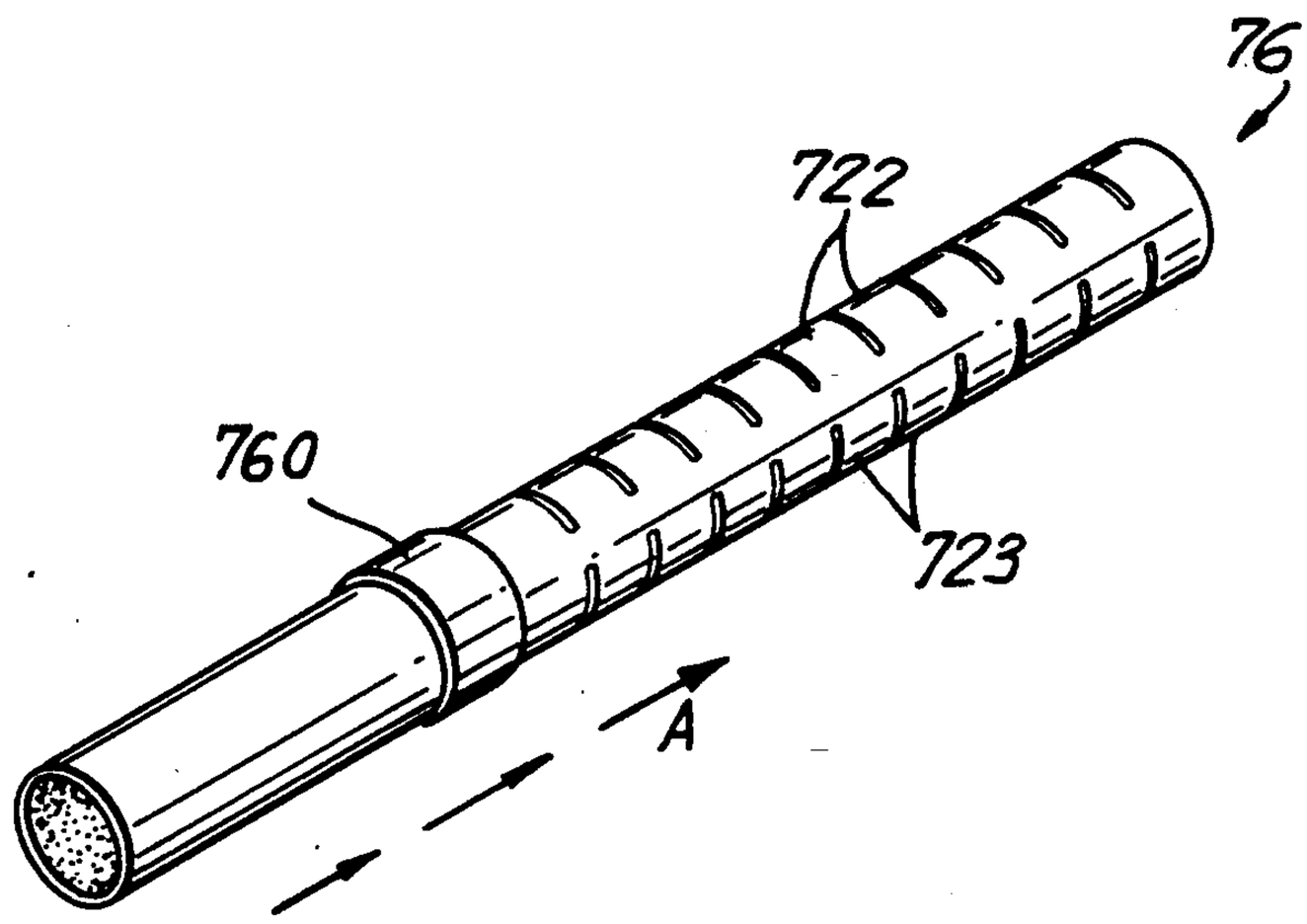

FIG. 7G.

RAI Exhibit 2006
Shenzhen Kangvape v. RAI
IPR2024-01406

FIG. 7I

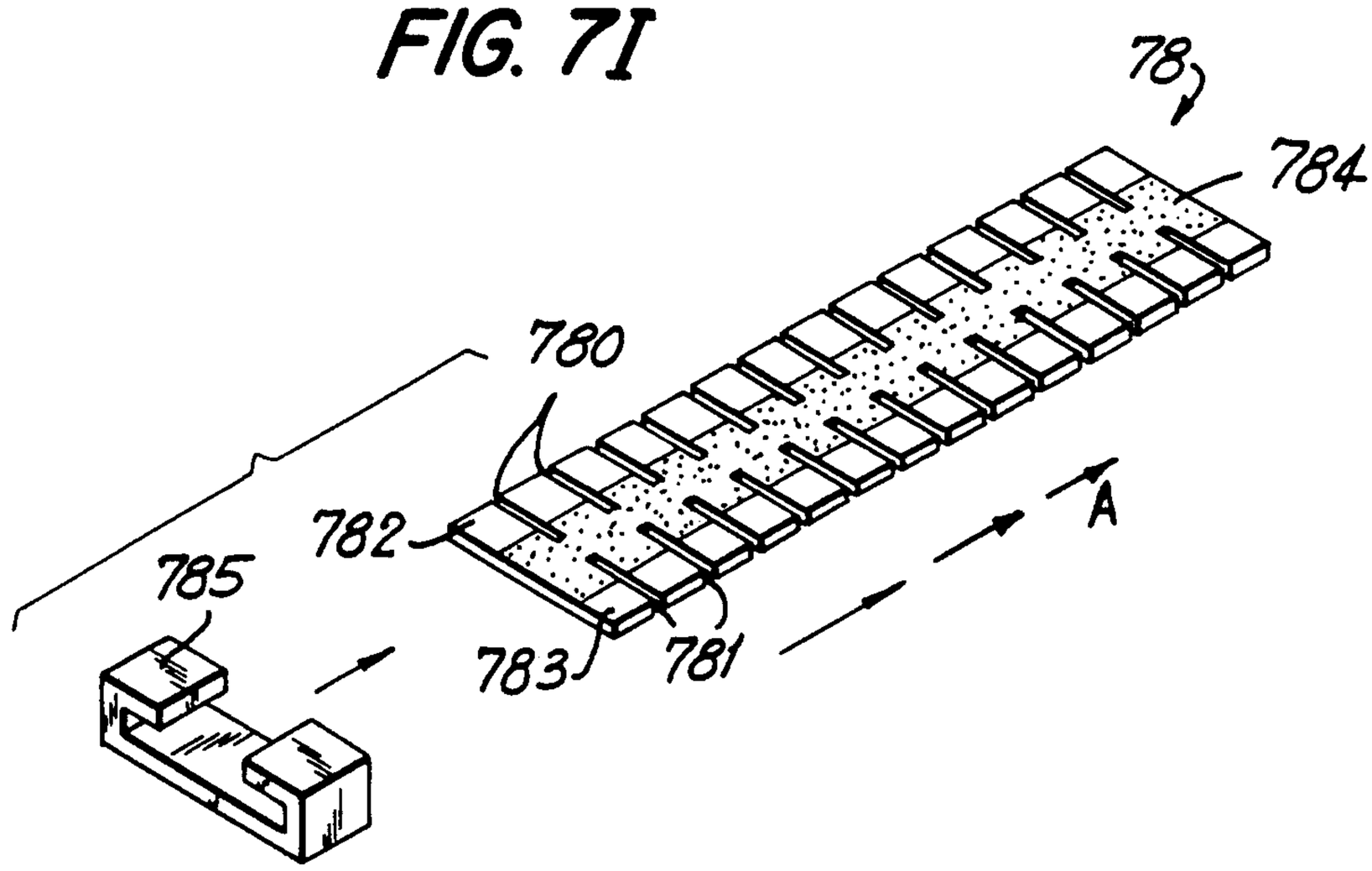

FIG. 7J

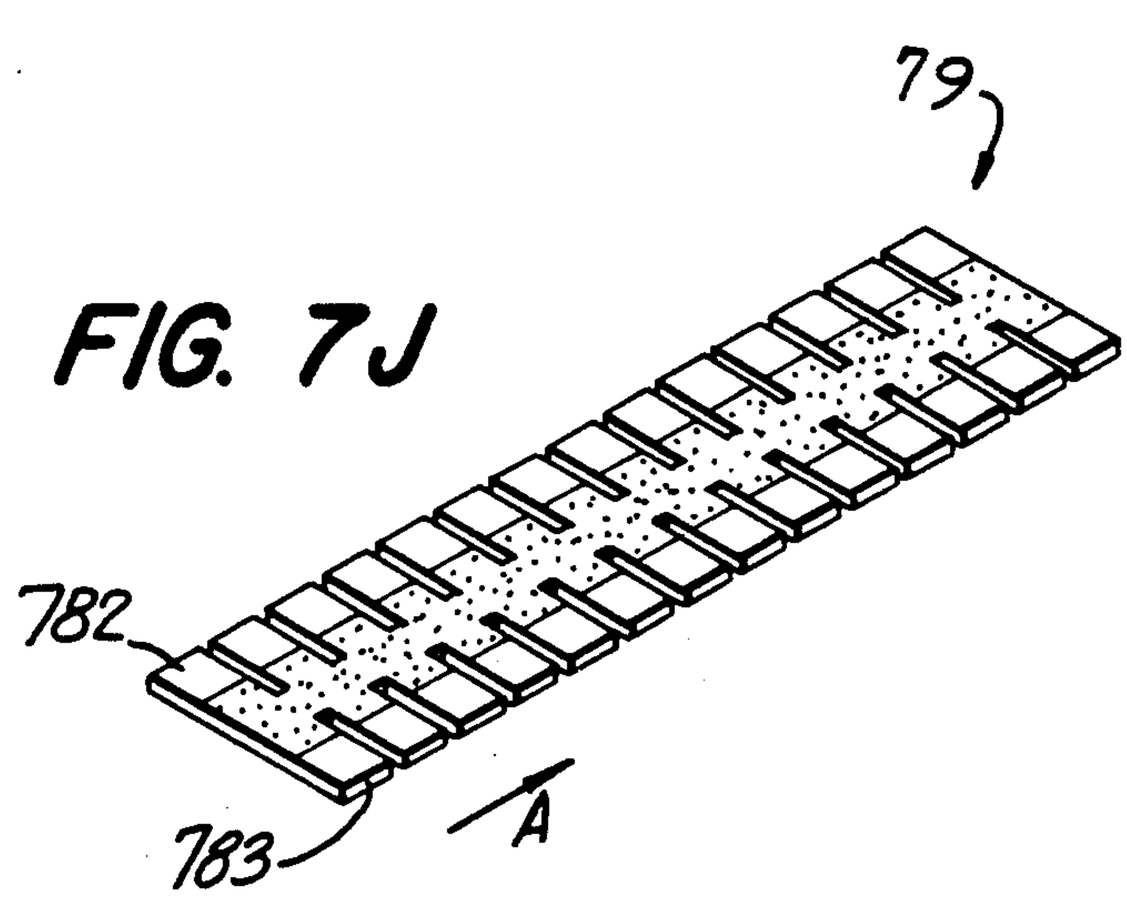

FIG. 7K

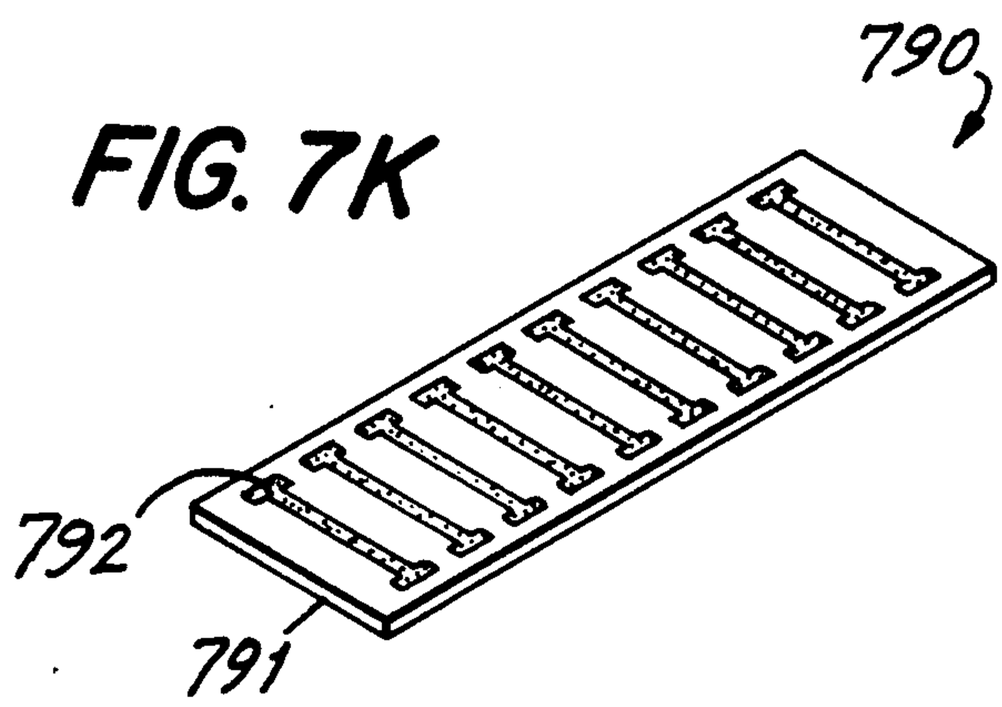

RAI Exhibit 2006
Shenzhen Kangvape v. RAI
IPR2024-01406

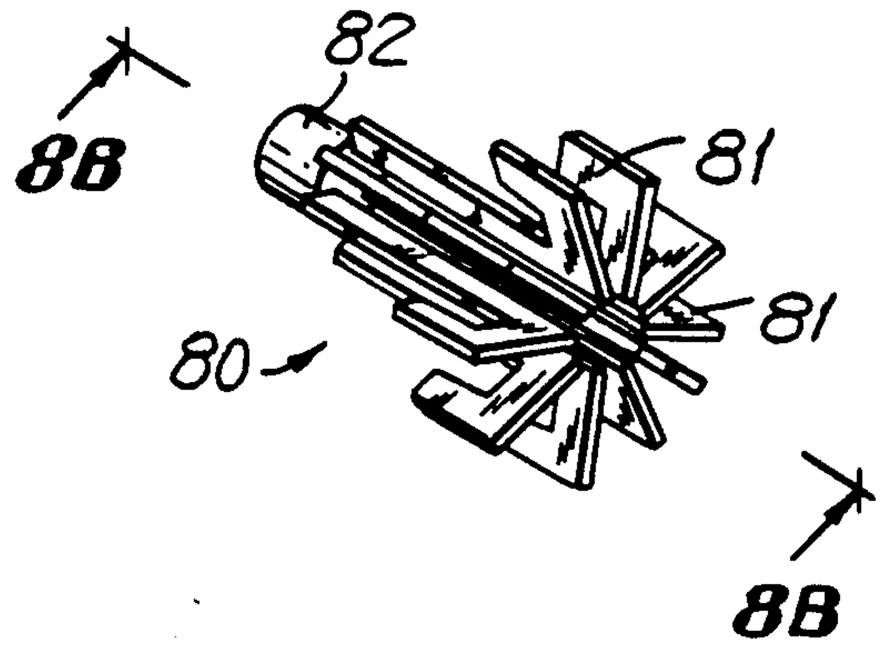

FIG. 8A

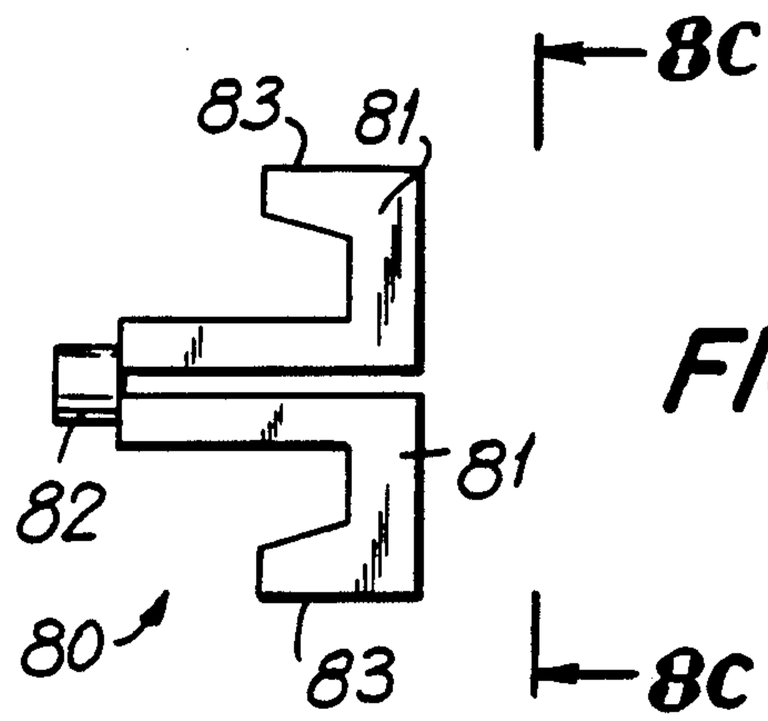

FIG. 8B

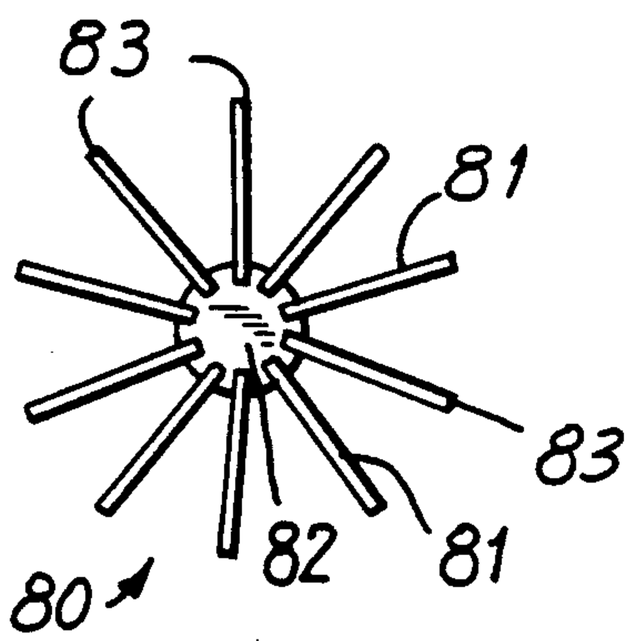

FIG. 8C

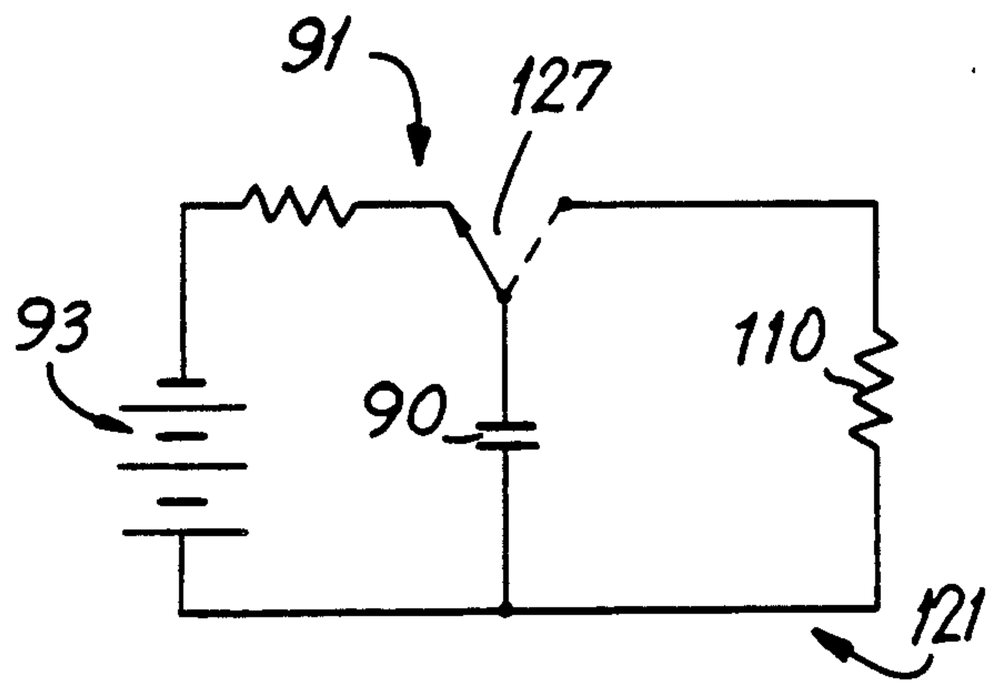

FIG. 9

RAI Exhibit 2006
Shenzhen Kangvape v. RAI
IPR2024-01406

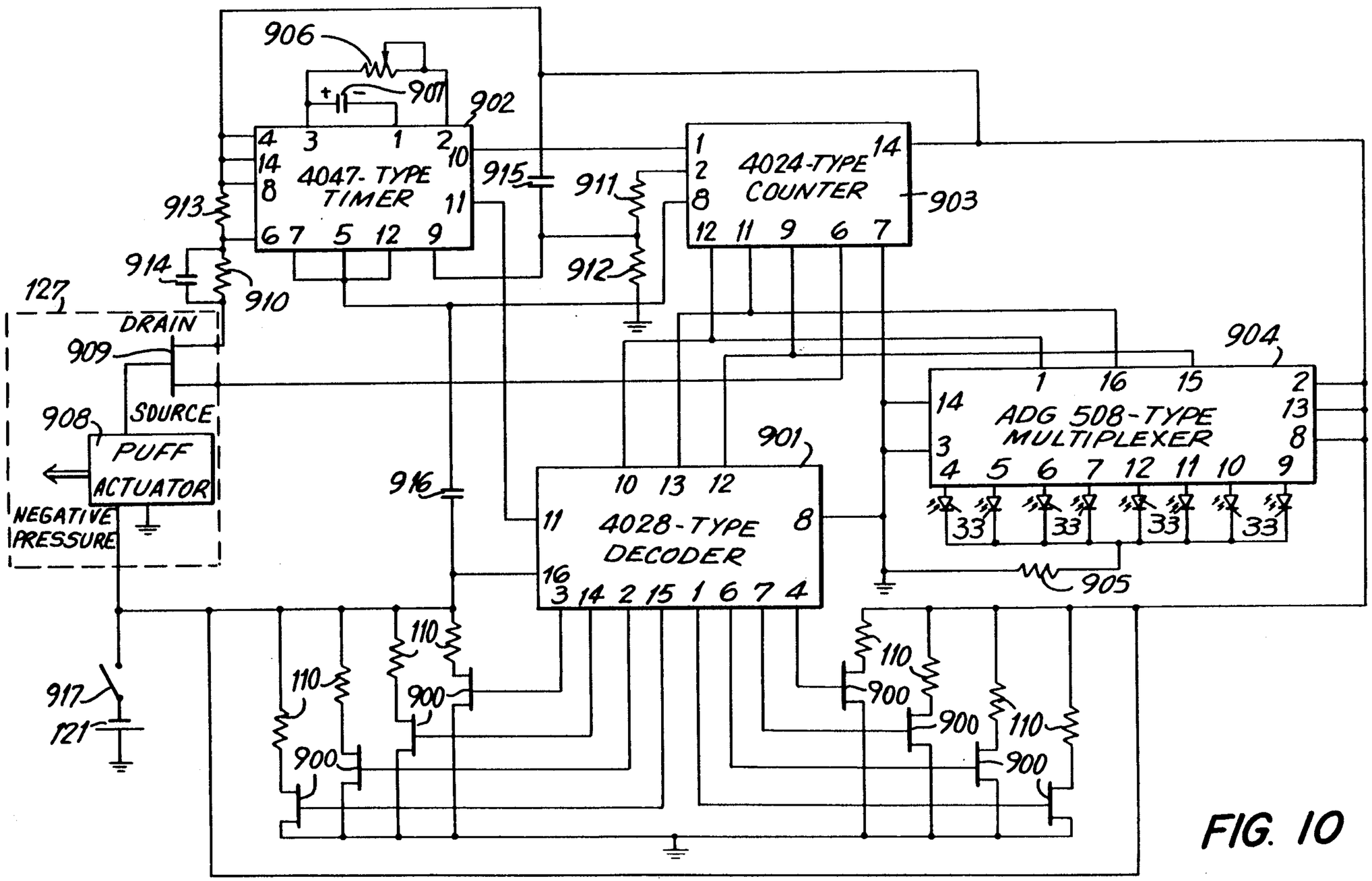

FIG. 10

RAI Exhibit 2006
Shenzhen Kangvape v. RAI
IPR2024-01406

FLAVOR GENERATING ARTICLE

BACKGROUND OF THE INVENTION

This invention relates to articles in which flavor generating media are heated but not burned to release tobacco flavors. More particularly, this invention relates to electrically heated articles.

It is known to provide smoking articles in which a flavor bed of tobacco or tobacco-derived material is heated, without combustion of tobacco, to release tobacco flavors without producing all the normal products of tobacco combustion. For example, it is known to provide a smoking article having a bed of tobacco-derived material and a combustible heat source. A smoker draws air through or around the heat source, heating it, and the heated air passes through the flavor bed, releasing tobacco flavors that are drawn into the smoker's mouth. The heat source temperature, is dependent on how the smoker uses the article, so that the flavor release rate varies widely from user to user and from article to article for a particular user.

Articles that produce the taste and sensation of smoking by heating tobacco electrically are also known. However, in some known electrically heated articles the temperature was not consistent because the output of the electrical power source was not well regulated, so that the release of flavors also was not consistent. In other known electrically heated articles the power source was external to the article and inconvenient.

It would be desirable to be able to provide an electrically heated article which operates at a controlled temperature to produce a predetermined release of flavor with each puff.

It would also be desirable to be able to provide such an article which consistently for each puff reaches its operating temperature quickly and remains at that temperature long enough to release the desired flavors, without overheating and causing burning of its flavor source, while at the same time minimizing the consumption of energy.

It would further be desirable to be able to provide such an article which is self-contained.

It would still further be desirable to be able to provide such an article which can have the appearance of a conventional cigarette, but produces neither sidestream smoke nor ash, and is not hot between puffs.

SUMMARY OF THE INVENTION

It is an object of this invention to provide an electrically heated article which operates at a controlled temperature to produce a consistent release of flavor with each puff.

It is also an object of this invention to provide such an article which consistently for each puff reaches its operating temperature quickly and remains at that temperature long enough to release the desired flavors, without overheating and causing burning of its flavor source, while at the same time minimizing the consumption of energy.

It is a further object of this invention to provide such an article which is self-contained.

It is still a further object of this invention to provide such an article which can have the appearance of a conventional cigarette, but produces neither sidestream smoke nor ash, and is not hot between puffs.

In accordance with this invention, there is provided an article for delivering to a consumer a flavor-containing substance. The article comprises a plurality of charges of flavor generating medium, electrical heating means for individually heating each of the plurality of charges, a source of electrical energy for powering the electrical heating means, and control means for applying the electrical energy to the electrical heating means to individually heat one of the plurality of charges. Each of the charges, when heated, delivers a quantity of flavor-containing substance to the consumer.

BRIEF DESCRIPTION OF THE DRAWINGS

The above and other objects and advantages of the invention will be apparent upon consideration of the following detailed description, taken in conjunction with the accompanying drawings, in which like reference characters refer to like parts throughout, and in which:

FIG. **1** is a perspective view of a first embodiment of an article according to the present invention;

FIG. **2** is a partially fragmentary exploded perspective view of the article of FIG. **1**;

FIG. **3** is a perspective view of a more preferred second embodiment of an article according to the present invention;

FIG. **4** is an exploded perspective view of the article of FIG. **3**;

FIG. **5** is a perspective view of a still more preferred article according to the present invention;

FIG. **6** is an exploded perspective view of the article of FIG. **5**;

FIGS. **7A–7K** are perspective views of various embodiments of heaters for use in the present invention;

FIGS. **8A–8C** are views of a particularly preferred embodiment of heaters for use in the present invention;

FIG. **9** is a schematic diagram of a preferred power source for use in the present invention; and

FIG. **10** is a schematic diagram of a preferred embodiment of a control circuit for use in the present invention.

DETAILED DESCRIPTION OF THE INVENTION

The basic article of the present invention includes a source of electrical energy, an electrical heater or heaters, electrical or electronic controls for delivering electrical energy from the source of electrical energy to the heaters in a controlled manner, and a flavor generating medium in contact with the heater. When the heater heats the flavor generating medium, flavor-containing substance—i.e., a vapor or aerosol, or mixture thereof, containing flavored vapors or aerosols or other vapor or aerosol components—is generated or released and can be drawn in by the consumer. (In the discussion that follows, either of the words "generate" or "release", when used alone, includes the other, and the word "form", when used in connection with the phrase "flavor-containing substance," means "generate or release.")

The flavor generating medium can be any material that, when heated, releases a flavor-containing substance. Such materials can include tobacco condensates or fractions thereof (condensed components of the smoke produced by the combustion of tobacco, leaving flavors and, possibly, nicotine), or tobacco extracts or fractions thereof, deposited on an inert substrate. These materials when heated generate or release a flavor-containing substance (which may include nicotine) which

RAI Exhibit 2006
Shenzhen Kangvape v. RAI
IPR2024-01406

can be drawn in by the consumer. The flavor generating medium can also be unburned tobacco or a composition containing unburned tobacco that, when heated to a temperature below its burning temperature, generates or releases a flavor-containing substance. Any of these flavor generating media can also include an aerosol-forming material, such as glycerine or water, so that the consumer has the perception of inhaling and exhaling "smoke" as in a conventional cigarette. A particularly preferred material is a composition such as that described in copending, commonly-assigned U.S. patent application Ser. No. 222,831, filed July 22, 1988, hereby incorporated by reference in its entirety, which describes pelletized tobacco containing glycerine (as an aerosol-forming ingredient) and calcium carbonate (as a filler). As used in the present invention, the composition, instead of being formed into pellets, would be deposited as a coating, in conjunction with adhesion agents such as citrus pectin, on a heater or on an inert substrate in contact with a heater.

The flavor generating medium is divided into individual charges, each representing one puff of the article. It is possible to mimic a conventional cigarette by providing a number of charges of flavor generating medium equal to an average number of puffs per cigarette, e.g., eight to ten puffs. Although the article does not decrease in length like a conventional cigarette as it is operated, it is possible to make the article in varying lengths, with different numbers of puffs. By providing individual charges for each puff, one reduces the total amount of flavor generating medium that must be provided, as compared with a single larger charge that would be electrically heated or reheated once for each of several puffs. The amount of electrical energy needed to heat a number of individual charges is also less than the amount needed to heat an entire large bed several times while also maintaining a controlled lower bed temperature between puffs, as necessary.

The portion of the article according to the present invention that contains the heaters and the flavor generating medium is preferably a replaceable plug-in unit, so that when all of the charges have been heated, the spent plug-in unit can be discarded and a new one inserted. The controls and power source could be retained.

One embodiment of article **10** according to the invention is shown in FIGS. **1** and **2**. Article **10** is the simplest form of article according to the present invention, and includes heater/flavor/mouthpiece section **11** and power and control section **12**. Section **11** includes a plurality of heaters **110**, each having deposited on its surface a quantity of flavor generating medium **111**. The heater configuration shown in FIG. **2** is illustrative only. Different possible heater configurations will be discussed below. Preferably, there is a segment of filter material **112**, such as conventional cellulose acetate or polypropylene cigarette filter material, possibly in conjunction with paper-wrapped tobacco rod sections, at the mouth end of section **11**, both for aesthetic purposes as well as to provide appropriate filtration efficiency and resistance-to-draw to the system. In addition, mouthpiece **113** can optionally be included.

As shown in FIG. **2**, there are ten heaters **110** in section **11**. There are also eleven contact pins **114** extending from section **11** remote from its mouth end—common pin and ten pins connected to individual heaters **110**—that fit into eleven sockets **120** on section **12** to make electrical contact between heaters **110** and power source **121**, the nature of which will be discussed in more detail below.

A knurled knob **122** is provided at the remote end of section **12** to allow the consumer to select one of the heaters **110**. Knob **122** controls a single-pole ten position rotary switch **123** connected by wires **124** to sockets **120**. Index mark **125** on knob **122** and graduations **126** on the body of section **12** assist the consumer in selecting the next heater **110**. To operate article **10**, the consumer selects a heater **110** using knob **122** and presses momentary-on pushbutton switch **127** to complete the circuit and energize the selected heater **110** to initiate heating. Flavor generating medium **111**, thus heated, can release or generate a flavor-containing substance. The consumer draws in the flavor-containing substance along with air drawn through perforations **115** in the outer wrapper of section **11** or **12**, which could be conventional cigarette paper or tipping paper. Air may also enter through the end of section **12** remote from the mouth end through channels that may be provided for that purpose, carrying the air around power source **121** and around other internal components of section **12**. What is important is that the air enter section **11** at a point at which it can fully sweep heaters **110** to carry the maximum amount of flavor-generating substance to the mouth of the consumer.

When all ten charges in section **11** have been heated, section **11** is spent, and can be unplugged from article **10** and a new section **11** can be plugged in. Section **12** as envisioned is reusable.

In article **10**, it is possible that the consumer will select a particular heater **110** more than once, giving rise to the possibility of reheating the flavor generating medium and producing less preferred vapor or aerosol compounds, unless knob **122** is designed so that it can only be rotated in one direction and only for one complete revolution. But in that case, its ability to rotate would have to be restored when section **11** is replaced, which is mechanically complex to achieve. Therefore, a more preferred embodiment **30** of an article according to the present invention, shown in FIGS. **3** and **4**, includes controls that automatically select which charge will be heated, as well as the duration of heating.

Article **30** includes a heater/flavor/mouthpiece section **11** identical to section **11** of article **10**. However, power and control section **31** contains electronic control circuit **32** (described in more detail below) in place of mechanical switch **123** of power and control section **12** of article **10**. Control circuit **32**, in response to depression of pushbutton **127**, selects one of charges **111** that has not previously been used, and supplies power from power source **121** to the associated heater **110** for a predetermined duration. After all ten charges **111** have been used, circuit **32** no longer supplies power to any heater until spent section **11** is replaced by a fresh unit. Optionally, control circuit **32** also locks out pushbutton **127** for a predetermined lockout period after each depression, so that heaters **110** are not energized too soon one after the other.

Articles according to the present invention do not decrease in length like conventional cigarettes do as they are smoked, because they do not burn. Therefore, in order to provide some indication to a consumer of how much of article **30** has been used or remains to be used, visual indicators **33**, which can be a series of ten light emitting diodes or a bar graph or similar indicator, under the control of circuit **32**, are preferably provided to display either how many of charges **111** have been

RAI Exhibit 2006
Shenzhen Kangvape v. RAI
IPR2024-01406

used or how many remain. Similarly, there is no glowing coal as in a conventional cigarette to indicate to the consumer that the article is operating. Optionally, an additional light emitting diode **34** or similar indicator, also under the control of circuit **32**, can be provided to show when one of heaters **110** is energized. An additional indicator or indicators (not shown) may also be provided to show that the lockout period is in effect or that it is over.

In the most particularly preferred embodiment, an article according to this invention does not have a pushbutton **127**, but is responsive to the consumer's drawing on the article, similarly to a conventional cigarette. Therefore, article **50**, shown in FIGS. **5** and **6**, is identical to article **30**, except that section **52** lacks pushbutton **127**. Pushbutton **127** is replaced by a switch **53** in section **52** that is sensitive either to pressure changes or air flow changes as the consumer draws on article **50**. It has been found that when a Model 163PC01D36 silicon sensor, manufactured by the MicroSwitch division of Honeywell, Inc., Freeport, Ill., is used in a preferred embodiment of the invention, the appropriate heater is activated sufficiently rapidly by the change in pressure when the consumer draws on article **50**. In addition, flow sensing devices, such as those using hot-wire anemometry principles, have been successfully demonstrated to actuate the appropriate heater **110** sufficiently rapidly after sensing a change in air flow.

The heaters **110** used in the present invention would have to heat the flavor generating medium to a temperature in the range of from about 100° C. to about 600° C., and preferably from about 200° C. to about 500° C., and more preferably from about 300° C. to about 400° C., to release the desired flavors from the flavor generating medium. To release or generate the desired flavors from the flavor generating medium, heater **110** should be energized for a duration of from about 0.1 second to about 4 seconds, preferably from about 0.5 second to about 1.5 seconds, and more preferably from about 0.8 second to about 1.2 seconds. The optimum temperature and total heating time depend on the heater mass, the mass of the flavor generating medium **111** on heater **110**, the configuration of heater **110** and flavor generating medium **111** thereon, and the thermal/physical properties of heater **110** and flavor generating medium **111**. The heating conditions are most preferably chosen to prevent burning of flavor generating medium **111**. At the same time, heaters **110** are preferably part of replaceable heater/flavor/mouthpiece section **11**, and therefore they need not be capable of more than one use.

The linear array of heaters **110** shown in FIGS. **2**, **4** and **6** is shown for ease of illustration only, and does not necessarily represent the preferred embodiment of heaters to be used in the present invention. Possible heaters for use in the present invention are described in copending, commonly-assigned U.S. patent application Ser. No. 07/444,569 filed concurrently herewith and hereby incorporated by reference in its entirety. A number of different possible additional heater configurations are shown in FIGS. 7A–7K. The different configurations reflect both mechanical considerations—e.g., ease of manufacture—and materials considerations—e.g., the effect of the heater material on the composition of the flavor-containing substance.

For example, linear heaters **110** shown in FIGS. **2**, **4** and **6** could be bars or mesh of stainless steel or other suitable metals or ceramics, although the flavor generating medium would adhere more readily to a mesh.

A preferred material for the heaters is graphite. Graphite heaters, possibly compounded with other forms of carbon to provide the desired electrical resistance and therefore the desired heating, are stable and non-reactive, and can be molded, extruded or machined into many forms and attached, by suitable contacts, to power source **121**. For example, a cylindrical graphite structure **70** as shown in FIG. 7A can be formed with a number of inwardly directed vanes **701** equal to the desired number of puffs. The inner surfaces **702** of structure **70** can be coated with the flavor generating medium. By connecting one pole of power source **121** to the outer surface **703** of structure **70**, and sequentially connecting the other pole to the inwardmost edge **704** of each vane **701**, one can heat each vane **701** to the desired temperature. Inwardmost edge **704** of each vane **701** is increased in thickness as compared to the body of vane **701** for added strength and to provide a conductive pathway to improve the uniformity of electrical flow and heating across the vane to maximize the use of available heater surface area. Covering both surfaces of each vane **701** with flavor generating medium also maximizes the use of available heater area and, thus, heater energy. Concentrating the flavor-generating medium further increases the amount of flavor-containing substance generated or released per unit of expended electrical energy.

Similarly, graphite structure **71** can be provided which functions like structure **70**, except that vanes **711** radiate outwardly from a central core **713**, as shown in FIG. 7B. The flavor generating medium is deposited on the surfaces **712** between vanes **711**. Power can be applied between core **713** and the outer edge **714** of the appropriate vane **711**. Outer edge **714** of each vane is increased in thickness as compared to the body of vane **711** for added strength and to provide a conductive pathway as discussed above.

Each of structures **70** and **71** has eight vanes **701**, **711**, representing eight charges of flavor generating medium which provide eight puffs. The structures shown below would provide ten puffs.

Structure **72** shown in FIG. 7C is a hollow cylinder of graphite, divided by nine opposed pairs of slits **720**, **721** into ten opposed pairs of segments **722**, **723**. The flavor generating medium is coated on the inner or outer surface **724** of cylinder **72**. When one pole of power source **121** is connected to each of opposed segments **722**, **723**, heat is generated predominantly in that pair only, heating the flavor generating medium coated onto that pair. Although all ten pairs are interconnected at midline **725**, at most a low current flows along midline **725** outside the pair being heated.

Structure **73** shown in FIG. 7D is a solid or hollow (not shown) cylinder of graphite, with ten grooves **730** formed in its surface, separating eleven lands **731**. Grooves **730** are coated with flavor generating medium **732**. By applying power source **121** across two adjacent lands **731**, one heats structure **73** between those two lands **731** along with flavor generating medium **732** in groove **730** therebetween.

Structure **74** shown in FIG. 7E is a graphite ring divided by two interleaved sets of ten slots each, one set of slots **740** extending from one side **741** of the ring, and the other set of slots **741** extending from the other side **743** of the ring, forming ten U-shaped fingers **744** that are coated inside or outside with flavor generating me-

RAI Exhibit 2006
Shenzhen Kangvape v. RAI
IPR2024-01406

dium **746** adjacent side **741**, and ten uncoated bases **745** adjacent side **743**, each base **745** connected to one leg each of two adjacent fingers **744** so that two adjacent bases **745** contact opposite ends of one finger **744**. By applying power from source **121** across two adjacent bases **745** heat is generated predominantly in that the finger **744** that they contact in common, heating the flavor generating medium thereon.

Structure **75** shown in FIG. 7F is similar to structure **74**, except that it has only five each of slots **740** and **742**, and the flavor generating medium **750** is confined to the band of overlap of slots **740** and **742**, thus forming ten separate areas of tobacco-derived material **750**, as well as five bases **751** and five fingers **752**. Bases **751** and fingers **752** are arranged so that when one pole of power source **121** is applied to one base **751**, two areas **750** can be heated sequentially by sequentially applying the other pole of power source **121** to each of two adjacent fingers **752**. To heat further areas **750**, the second pole of power source **121** is left attached to the second one of fingers **752** and the first (or third) pole of power source **121** is connected to a different base **751**, and so on.

Structure **76** shown in FIG. 7G is similar to structure **72** shown in FIG. 7C, except that a slidable heater **760** is provided to serially heat each pair of opposed segments **722**, **723** by conduction, convection or radiation as it is moved in the direction of arrow A. Optionally, structure **703** can be indexed through stationary heater collar **760**. A variant structure **77** shown in FIG. 7H is an extruded rod **770** (hollow or solid) made solely of flavor generating medium and components to add mechanical strength, provided with slidable heater **771**. Heater **771** is similar to heater **760**. The heater is moved in the direction of arrow A, either manually by the consumer, or automatically by electromagnetic or mechanical means (not shown) linked to the consumer's actuation of the heater with pushbutton **127** or with a switch activated by either pressure or airflow provided by the consumer during a puff. For example, in addition to closing electrical contacts, pushbutton **127** could also engage a mechanical ratchet (not shown). Alternatively, the closing of switch **127** (or alternative switches) could, in addition to providing current for the heaters, move a pawl which allows a spring attached to collar **760** or **771** to move the collar one position in the direction of arrow A.

The same principle can be applied to each of the three heater structures shown in FIGS. 7I, 7J and 7K. Structure **78** of FIG. 7I is a thermally conductive substrate divided by slots **780**, **781** into strips **782**, **783**. Applying heat to the width-wise strips defined by opposed pairs of strips **782**, **783** causes heat to flow primarily to those width-wise strips, heating that section of substrate **78** and flavor generating medium **784** thereon. Heat is applied to strips **782**, **783** by passing substrate **78** through a heater **785**. The movement of substrate **78** through heater **785** in the direction of arrow A can be accomplished in any of the ways set forth above for the movement of collars **760**, **771**. Heater **785** can be disposable, as part of section **11**, or permanent, as part of section **12**, **31** or **52**, with only substrate **78** being replaced as part of section **11**.

Structure **79** of FIG. 7J is similar to structure **78**, except that substrate **79** is made from graphite, which serves as its own heater, so that heater **785** can be omitted and replaced with electrical contacts (not shown) for applying power across strips **782**, **783** of substrate **79**.

Structure **790** of FIG. 7K has an inert substrate **791** on which lines **792** of flavor generating medium, mixed with graphite or similar material to make it conductive, are laid. Contacts similar to those used with structure **79** are used to apply power across lines **792**, which, by virtue of their conductivity, form their own heaters integral with the flavor generating medium.

FIGS. 8A–8C show a particularly preferred embodiment of a heater structure **80** for use with the present invention. Structure **80** includes ten U-shaped heater elements **81** connected to a central hub **82**. Preferably, heater elements **81** are made of graphite. Hub **82** serves as one contact point for the application of power to each heater element **81**, while outer edge **83** of each heater element **81** serves as the second contact point for that respective heater. Hub **82** is connected to one contact and outer edges **83** are connected to a series of ten contacts that are activated sequentially to sequentially heat heater elements **81**. (As used herein, "sequentially" does not necessarily imply any spatial order, but only that some individual element is heated after some other individual element.)

Whatever heater design is used, it is subject to several design criteria. First, the electrical resistance of the heater should be matched to the voltage of power source **121** so that the desired rate of heating is accomplished. At the same time the resistance must be large compared to the internal resistance of power source **121** to avoid excessive losses due to the internal resistance. Second, the surface area must be sufficient to allow for support of the flavor generating medium with proper thickness of the flavor generating medium to allow rapid heating and with proper area for generating or release of vapors or aerosols containing flavors or other volatile components. Third, the thermal conductivity, heat capacity and heat mass must be such that the heat generated is conducted effectively to the flavor generating medium but not away from the heater to the surroundings, and such that the excessive energy is not necessary to heat the heater itself.

The contact resistance between the heater material and the contacts should be kept low. If necessary, suitable materials, such as tantalum, can be compounded or coated at the contact points to lower contact resistance. Any materials added should be non-reactive at the operating temperatures.

Heater/flavor/mouthpiece section **11** preferably would contain heater elements as described above coated with flavor generating medium, all wrapped in a tube, which can be made of heavy paper, to allow it to be inserted by a consumer into section **12**, **31** or **52**.

Power source **121** preferably must be able to deliver sufficient energy to generate or release flavors or other components in vapor or aerosol form from ten charges of flavor generating medium, while still fitting conveniently in the article. However, the energy to be delivered is not the only criterion, because the rate at which that energy is delivered—i.e., the power—is also important. For example, a conventional AAA-sized alkaline cell contains enough energy to heat several hundred charges of flavor generating medium, but it is not designed to deliver the necessary energy at a high enough rate. On the other hand, nickel-cadmium (Ni-Cad) rechargeable batteries are capable of providing much greater power on discharge. A preferred power source is four N50-AAA CADNICA nickel-cadmium cells produced by Sanyo Electric Company, Ltd., of Japan. These batteries provide 1.2-volts each, for a total of 4.8

RAI Exhibit 2006
Shenzhen Kangvape v. RAI
IPR2024-01406

volts when connected in series. The four batteries together supply about 264 milliwatt-hours, which is sufficient to power at least one ten puff article without recharging. Of course, other power sources, such as rechargeable lithium-manganese dioxide batteries, can be used. Any of these types of batteries can be used in power source **121**, but rechargeable batteries are preferred because of cost and disposal considerations associated with disposable batteries. In addition, if disposable batteries are used, section **12**, **31** or **52** must be openable for replacement of the battery.

If rechargeable batteries, as preferred, are used, a way must be provided to recharge them. A conventional recharging unit (not shown) deriving power from a standard 120-volt AC wall outlet, or other sources such as an automobile electrical system or a separate portable power supply, can be used. The charge rate and controller circuitry must be tailored to the specific battery system to achieve optimal recharging. The recharging unit would typically have a socket into which the article, or at least section **12**, **31** or **52**, would be inserted. Contacts **128** on section **12**, **31** or **52** connected to power source **121** would contact corresponding contacts in the recharging unit.

The energy content of a battery in power source **121** can be more fully exploited, despite the power or current limitation of the battery, if a capacitor is included in power source **121** as well. The discharge of the capacitor can be used to power heaters **110**. Capacitors are capable of discharging more quickly than batteries, and can be charged between puffs, allowing the battery to discharge into the capacitor at a lower rate than if it were used to power heaters **110** directly.

An idealized schematic form of a power source **121** including a capacitor is shown in FIG. **9**. Capacitor **90** is part of a series R-C circuit **91** with resistor **92**, in which capacitor **90** is charged between puffs by battery **93** with a time constant RC, where R is the resistance of resistor **92** and C is the capacitance of capacitor **90**. (In a real, non-ideal circuit, resistance R would also include the internal resistance of battery **93** and the impedance of capacitor C, as well as the resistance of any wires or other conductors in circuit **91**.) In this embodiment, pushbutton (or pressure- or air flow-sensitive device) **127** acts as a single-pole, double-throw momentary switch that normally connects capacitor **90** to R-C circuit **91** for charging. When contact is made by depression of pushbutton **127** (or by activation of the above-mentioned devices), capacitor **90** can be disconnected from charging circuit **91** and connected to discharge across heater resistance **110**.

Alternatively, power source **121** could include only capacitor **90**, with no battery. In such an embodiment, contacts **128** would have to be touched to an external power source to charge capacitor **90**. Capacitor **90** could be sized in such a case to require charging after each puff, or to be capable of being charged for a number of puffs (e.g., the same as the number of charges of flavor generating medium in the article). The external power source could be a specially designed ashtray or other appliance (not shown) having power contacts for mating with contacts **128**. The ashtray itself could be battery powered or could contain a power supply that connects to a 120 volt AC wall outlet. Another type of external power source could be a socket provided on an automobile dashboard and connected to the electrical system of the automobile, similar to the cigarette lighter currently provided in automobiles.

In another possible embodiment, energy would be coupled to the article by magnetic or electromagnetic induction, followed by suitable rectification and conditioning prior to charging the capacitor. For example, the specially designed ashtray referred to above could contain a suitable generator for coupling magnetic or electromagnetic energy to the article.

If a capacitor is used in the article, the required capacitance is determined by the voltage available for charging and the maximum amount of energy to be stored. For example, if the voltage available is 6 volts and the amount of energy needed for a single puff is 10 joules, then the required capacitance is 0.56 farads. The capacitance needed would increase proportionally if energy for multiple puffs is to be stored. Preferably, the capacitor also has a very low internal resistance, so that the time constant for discharging into heater **110** is determined exclusively by the heater resistance and the capacitance.

The most preferred embodiment of the present invention includes control circuit **32** of FIG. **10**. Control circuit **32** preferably fulfills several functions. It preferably sequences through the ten (or other number of) heaters **110** to select the next available heater **110** each time switch **27** is closed. It preferably applies current to the selected heater for a predetermined duration that is long enough to produce sufficient flavor-containing substance for an average puff, but not so long that the charge of flavor generating medium can begin to burn. It preferably controls indicators **33**, **34** which show how much of the article remains or has been used and when one of heaters **110** is active. In addition, it may also lock out switch **127** for a predetermined time period after each actuation to allow time to charge capacitor **90** in power source **121**, and to avoid inadvertently energizing the next heater **110**.

Control circuit **32** also controls the amount of total particulate matter (TPM) evolved from the flavor generating medium by controlling the temperature to which the flavor generating medium is heated, which is a function of the duration of heating and the power applied. For example, about two milligrams of TPM are typically released when 100 milligrams of the preferred flavor generating medium is heated to 120° C. for 300 seconds, while about twenty-two milligrams of TPM are released when the same amount of flavor generating medium is heated to 280° C. for 300 seconds. Heating five milligrams of flavor generating medium to 300° C. for 2 seconds releases about one milligram of TPM. Thus the total TPM delivery of an article according to this invention can be controlled by selecting the amount of flavor generating medium as well as by tailoring heaters **110** and circuit **32** to control the temperature to which the flavor generating medium is heated and the rate and duration of heating.

A preferred embodiment of control circuit **32** is shown in FIG. **10**. In FIG. **10**, all points labelled V_+ are connected to the positive terminal of power source **121**, and all points labelled as ground are connected to the negative terminal of power source **121**.

Each heater **110** is connected to V_+ directly, and to ground through a respective field-effect transistor (FET) **900**. A particular FET **900** will turn on under control of standard 4028-type CMOS BCD-to-decimal decimal decoder **901** (via pins **3**, **14**, **2**, **15**, **1**, **6**, **7**, **4**). Decoder **901** is also connected (via pin **11**) to the complementary output of a 4047-type CMOS timer **902** (also via pin **11**). Pin **11** of decoder **901** is high when the

RAI Exhibit 2006
Shenzhen Kangvape v. RAI
IPR2024-01406

output of timer **902** (pin **10**) is low. All outputs of decoder **901** remain low if a BCD code greater than or equal to 1001 is applied to its inputs. Therefore an output of decoder **901** can only be on during a positive clock pulse to 4024-type CMOS counter **903**. Decoder **901** will decode a standard BCD 4-bit code input from counter **903** into 1-of-10 output. Decoder **901** is connected to supply voltage V_+ (at pin **16**) and to ground (at pin **8**). Decoder **901** receives BCD input from counter **903** (at pins **10, 13, 12**).

Heater-active indicators **33** (light-emitting diodes (LEDs) or other indicator devices) are connected to V_+ through an ADG508-type multiplexer **904** (via pins **4, 5, 6, 7, 12, 11, 10, 9**) supplied by Analog Devices of Norwood, Mass. LEDs **33** are connected to ground via a 2 KΩ current-limiting resistor **905**. Multiplexer **904** is connected to V_+ (via pins **2, 13, 8**) and to ground (via pins **14, 3**). Multiplexer **904** receives BCD input from counter **903** (via pins **1, 16, 15**). The operation of multiplexer **904** is similar to that of decoder **901** in that it receives BCD input from counter **903**, and decodes it such that an individual output is selected through which V_+ is supplied, but in this case to LEDs **33** rather than to heaters **110**.

Counter **903** is connected to V_+ (via pin **14**) and to ground (via pins **8, 7**), and receives a positive clock pulse from timer **902** (via pin **1**). Counter **903** is reset to 0 via a positive pulse (through pin **2**). BCD output is provided at pins **12, 11, 9, 6**. Every time the clock pulse (receives at pin **1**) changes from positive to ground, counter **903** advances one count. Counter **903** counts positive clock pulses and converts the count to BCD. The output at pin **6** is connected to pin **6** of timer **902**.

Timer **902** is in a monostable configuration and is connected to V_+ (via pins **4, 8, 14**) and to ground (via pins **5, 7, 12, 9**) for negative triggering (through pin **6**). Negative triggering is accomplished by leaving pin **6** positive and then briefly pulling it to ground to initiate the timing sequence. When triggered, the complementary outputs (via pins **10, 11**) change for a time period that is dependent upon resistance value R of resistor **906**, preferably 2 MΩ (connected between pins **2, 3**), and a capacitance value C of capacitor **907**, preferably 1 μF (connected between pins **1, 3**).

Puff actuator **908** is the source of the negative trigger at pin **6** of timer **902**. Puff actuator **908** has two power inputs (For V_+ and for ground), and one output. The output drives the gate of MOSFET switch **909**. The source of MOSFET switch **909** is connected to counter **903** (at pin **6**). The drain of MOSFET switch **909** is connected to timer **902** (at pin **6**). Puff actuator **908** can be a device similar to silicon based pressure sensitive sensor Model 163PC01D36 referred to above, or a gas flow transducer such as a wheatstone bridge semiconductor version of a hot wire anemometer.

Resistor **910** preferably has a value of 1 MΩ, while resistors **911, 912, 913** preferably all have values of 10 KΩ. Capacitors **914, 915, 916** preferably all have values of 0.1 μF.

Prior to the consumer taking the initial puff, the control circuitry is turned on via on/off switch **917** or similar device. The heater active indicator LED **33** is illuminated for the first heater **110**. Correspondingly, heater number **1** is selected by decoder **901** and awaits firing. Counter **903** is reset to begin counting. Timer **902** complementary output at pin **19** is low (which is the clock to counter **903**, pin **1**) and at pin **11** is high (which keeps the heater from firing via pin **11** of decoder **901**). When the consumer takes a puff, puff actuator **908** causes a trigger of timer **902**. The RC time constant is set by resistor **910** and capacitor **913** such that a pulse of desired duration is output from complementary outputs at pins **10, 11** of timer **902**. The output from pin **11** of timer **902**, connected to pin **11** of decoder **901** goes low, causing the first heater to be heated. The output at pin **10** of timer **902** stays high for the duration set by RC then goes low causing counter **903** to advance one count. The output at pin **11** returns high, discontinuing heater activation. Since the count of counter **903** has advanced by one, the heater active LED illuminated via multiplexer **904** has correspondingly advanced, and the next heater to be fired in sequence has been selected via decoder **901**. This cycle will repeat until the final heater has been heated. At such time pin **6** of counter **903** will go high causing timer **902** to become non-triggerable. In such case the heater firing sequence is halted until the circuit is reset by turning it off then on again.

Although not implemented in circuit **32** as depicted in FIG. **10**, a lockout function as described above can be provided. An example of a circuit containing such a lockout function is described in co-pending, commonly-assigned U.S. patent application Ser. No. 07/444,818, filed concurrently herewith and hereby incorporated by reference in its entirety.

Thus it is seen that an electrically heated flavor generating article whcih operates at a controlled temperature to produce a consistent release of flavor-containing substance with each puff, which reaches its operating temperature quickly and provides sufficient heat to generate or release the desired flavor-containing substance, without overheating and causing burning of its flavor generating medium, which is self-contained, and which can have the appearance of a conventional cigarette, is provided. One skilled in the art will appreciate that the present invention can be practiced by other than the described embodiments, which are presented for purposes of illustration and not of limitation, and the present invention is limited only by the claims which follow.

What is claimed is:

1. An article for delivering to a consumer an inhalable flavor-containing substance, said article comprising:

a plurality of pre-measured charges of flavor generating medium;

electrical heating means for individually heating each of said pluralilty of charges;

a source of electrical energy for powering said electrical heating means; and **p1** control means for selectively applying said electrical energy to said electrical heating means to selectively heat said plurality charges in a predetermined sequence, each of said charges being heated only once and, when heated, delivering a predetermined quantity of flavor-containing substance to said consumer.

2. The article of claim **1** wherein said flavor generating medium comprises tobacco; and

when said flavor generating medium is heated, a flavor-containing substance comprising tobacco components is formed.

3. The article of claim **1** wherein said flavor generating medium comprises an aerosol-forming material; and

when said flavor generating medium is heated, an aerosol is formed.

4. The article of claim **3** wherein said aerosol-forming material comprises glycerine.

RAI Exhibit 2006
Shenzhen Kangvape v. RAI
IPR2024-01406

5. The article of claim 4 wherein said aerosol-forming material further comprises water.

6. The article of claim 3 wherein said aerosol-forming material comprises water.

7. The article of claim 1 wherein:

said flavor generating medium comprises tobacco and an aerosol-forming material; and

when said flavor generating medium is heated, an aerosol comprising tobacco components is formed.

8. The article of claim 7 wherein said aerosol-forming material comprises glycerine.

9. The article of claim 8 wherein said aerosol-forming material further comprises water.

10. The article of claim 7 wherein said aerosol-forming material comprises water.

11. The article of claim 7 wherein said flavor generating medium is a dried slurry comprising ground tobacco and said aerosol-forming material.

12. The article of claim 1 wherein said flavor generating medium comprises tobacco extracts.

13. The article of claim 1 wherein said flavor generating medium comprises condensed components of smoke produced by combustion of tobacco.

14. The article of claim 1 wherein said electrical heating means comprises resistant heating means in contact with said flavor generating medium.

15. The article of claim 14 wherein:

said resistance heating means is a mesh of resistive wire; and

said flavor generating medium is deposited on said wire mesh.

16. The article of claim 15 further comprising an adhesion agent for adhering said flavor-generating medium to said mesh.

17. The article of claim 16 wherein said adhesion agent is a pectin.

18. The article of claim 17 wherein said pectin is a citrus pectin.

19. The article of claim 15 wherein:

said flavor generating medium is a dried slurry comprising ground tobacco and an aerosol-forming material; and

said slurry is coated onto said mesh.

20. The article of claim 19 wherein said aerosol-forming material comprises glycerine.

21. The article of claim 20 wherein said aerosol-forming material further comprises water.

22. The article of claim 19 wherein said aerosol-forming material comprises water.

23. The article of claim 1 wherein said flavor-generating medium is concentrated, thereby reducing the amount of electrical energy necessary to form said flavor-containing substance.

24. The article of claim 1 wherein:

said plurality of charges of flavor generating medium are deposited on a substrate; and

said electrical heating means is in contact with said substrate.

25. The article of claim 24 further comprising an adhesion agent for adhering said flavor generating medium to said substrate.

26. The article of claim 25 wherein said adhesion agent is a pectin.

27. The article of claim 26 wherein said pectin is a citrus pectin.

28. The article of claim 24 wherein said electrical heating means comprises a plurality of heating elements corresponding to said plurality of charges.

29. The article of claim 24 wherein said electrical heating means comprises:

a heating element; and

means for indexing said substrate past said heating element.

30. The article of claim 1 wherein:

said flavor generating medium comprises an electrically conductive material having a selected resistance; whereby:

said electrical heating means is integral with said flavor generating medium.

31. The article of claim 30 wherein said electrical heating means comprises means for conducting electrical energy from said source of electrical energy to said electrically conductive flavor generating medium.

32. The article of claim 31 wherein said electrical heating means comprises a plurality of said conducting means corresponding to said plurality of charges, each of said conducting means contacting one of said charges.

33. The article of claim 30 wherein:

said plurality of charges of flavor generating medium are deposited on a substrate; and

said electrical heating means comprises a plurality of conducting means corresponding to said plurality of charges, each of said conducting means contacting one of said charges.

34. The article of claim 30 wherein:

said plurality of charges of flavor-generating medium are deposited on a substrate; and

said electrical heating means comprises:

a conducting means for contacting said charges, and

means for indexing said substrate past said conducting means, whereby:

said conducting means sequentially contacts each of said charges.

35. The article of claim 1 wherein said electrical heating means comprises graphite.

36. The article of claim 35 further comprising an adhesion agent for adhering said flavor generating medium to said graphite.

37. The article of claim 36 wherein said adhesion agent is a pectin.

38. The article of claim 37 wherein said pectin is a citrus pectin.

39. The article of claim 35 wherein said graphite is compounded with other forms of carbon.

40. The article of claim 35 wherein:

said electrical heating means further comprises electrical contact means for contacting said graphite; and

said graphite is coated with a contact-resistance reducing substance.

41. The article of claim 40 wherein said contact-resistance reducing substance comprises tantalum.

42. The article of claim 35 wherein said heating means comprises a cylindrical structure comprising graphite having a plurality of radial vanes, at least one surface of each of said vanes being coated with said flavor generating medium such that each of said vanes has one of said plurality of charges thereon and has a radial edge and an axial edge, all of one of said edges being connected in common to said source of electrical energy, and each of the other of said edges being connected individually to said source of electrical energy.

43. The article of claim 42 wherein said heating means comprises a cylinder comprising graphite, said cylinder having a continuous cylindrical surface and a

RAI Exhibit 2006
Shenzhen Kangvape v. RAI
IPR2024-01406

plurality of said vanes extending inwardly therefrom and extending to an inner edge at a point short of the axis of said cylinder, said outer surface serving as said common connection to said source of electrical energy, and each said inner edge serving as said individual connection to said source of electrical energy.

44. The article of claim **42** wherein said heating means comprises a cylinder comprising graphite, said cylinder having a cylindrical inner core and a plurality of said vanes extending outwardly therefrom and extending to an outer edge at a point remote from the axis of said cylinder, said inner core serving as said common connection to said source of electrical energy, and each said outer edge serving as said individual connection to said source of electrical energy.

45. The article of claim **44** wherein said heating means comprises a hollow cylinder comprising graphite, said cylinder having said flavor generating medium coated thereon, said cylinder being divided by at least one pair of opposed partial circumferential slits into a plurality of opposed circumferential strips, each strip of an opposed pair of strips being connected to a pole of said source of electrical energy forming a ring-like heater segment, the flavor generating medium on said inner side of each of said ring-like segments forming one of said plurality of charges.

46. The article of claim **45** wherein said heating means comprises a cylinder comprising graphite, said cylinder having an outer surface having a plurality of grooves therein separated by lands thereon, each of said grooves being coated with said flavor generating medium and forming one of said individual charges thereof, each of said grooves being heated by applying power from said source of electrical energy to a land on either side of said groove.

47. The article of claim **46** wherein said heating means comprises a ring comprising graphite and having first and second ends, and divided by first and second interleaved sets of slits, each set of slits extending from a respective one of said ends more than halfway to an opposite one of said ends, into a plurality of bases adjacent said first end and fingers adjacent said second end, said fingers being coated with said flavor generating medium, individual charges of said flavor generating medium being heated by one of (a) applying power from said source of electrical energy to one of said bases and one of said fingers, and (b) applying power from said source of electrical energy to adjacent ones of said bases.

48. The article of claim **47** wherein said flavor generating medium is coated onto said ring in a circumferential band in an area overlapped by both said first and second sets of slits, individual charges of said flavor generating medium being heated by applying power from said source of electrical energy to adjacent ones of said bases.

49. The article of claim **47** wherein said flavor generating medium is coated on to said ring in a circumferential band in an area beginning at said second and extending toward said first end a shorter distance than said set of slits extending from said second end, individual charges of said flavor generating medium being heated applying power from said source of electrical energy to one of said bases and one of said fingers.

50. The article of claim **47** wherein said heating means comprises an elongated sheet comprising graphite, said sheet being laterally divided into opposed pairs of strips by opposed pairs of slits extending inwardly from longitudinal edges of said sheet, said flavor generating medium being coated onto said sheet in a longitudinal band spaced from said longitudinal edges, individual charges of said flavor generating medium being heated by applying power from said source of electrical energy to opposed ones of said strips.

51. The article of claim **50** wherein said heating means comprises a plurality of U-shaped vanes, each of said vanes having two legs interconnected at their proximate ends by a base, one of said legs being longer than the other of said legs, said vanes being joined to an electrically conductive hub at distal ends of said longer legs such that said vanes are oriented radially with said longer legs adjacent one another, said bases extending radially outward, and said shorter legs extending parallel to said longer legs but spaced radially outwardly therefrom, said vanes being coated with said flavor generating medium, individual charges of said flavor generating medium being heated by applying power from said source of electrical energy to said hub and to a respective one of said shorter legs.

52. The article of claim **1** wherein said source of electrical energy comprises a battery.

53. The article of claim **52** wherein said battery is disposable.

54. The article of claim **52** wherein said battery is rechargeable.

55. The article of claim **54** wherein said source of electrical energy comprises a capacitor.

56. The article of claim **55** wherein said source of electrical energy further comprises means for charging said capacitor.

57. The article of claim **56** wherein said capacitor charging means comprises a battery.

58. The article of claim **56** wherein said battery is disposable.

59. The article of claim **56** wherein said battery is rechargeable.

60. The article of claim **56** wherein said capacitor charging means comprises contact means for connecting said capacitor to an external voltage source.

61. The article of claim **60** wherein said capacitor has a capacitance sufficient to store energy for heating one of said charges of flavor generating medium.

62. The article of claim **60** wherein said capacitor has a capacitance sufficient to store energy for heating at least some of said plurality of charges of flavor generating medium.

63. The article of claim **62** wherein said capacitance is sufficient to store energy for heating all of said plurality of charges of flavor generating medium.

64. The article of claim **63** wherein said control means comprises:

means for selecting one of said plurality of charges of flavor generating medium; and

means for, when a consumer desires to puff said article, applying a pulse of electrical energy to heat said selected one of said plurality of charges of flavor generating medium.

65. The article of claim **64** wherein said selecting means is manual.

66. The article of claim **64** wherein said selecting means is automatic.

67. The article of claim **66** wherein said automatic selecting means selects each of said plurality of charges sequentially.

RAI Exhibit 2006
Shenzhen Kangvape v. RAI
IPR2024-01406

68. The article of claim 66 wherein said control means further comprises sequential indication means for indicating which of said plurality of charges is selected.

69. The article of claim 64 wherein said pulse applying means applies a pulse of predetermined duration.

70. The article of claim 69 wherein said control means further comprises pulse indication means for indicating when said pulse is being applied.

71. The article of claim 69 wherein said pulse applying means comprises actuation means and applies said pulse in response to actuation of said actuation means by a consumer.

72. The article of claim 71 wherein said control means further comprises lockout means for disabling said actuation means for a predetermined lockout period after an actuation thereof.

73. The article of claim 71 wherein said actuation means comprises a pushbutton.

74. The article of claim 71 wherein said actuation means comprises a switch actuated when a consumer draws on said article.

75. The article of claim 74 wherein said switch is actuated by a pressure-sensitive sensor.

76. The article of claim 74 wherein said switch is actuated by a flow-sensitive sensor.

77. The article of claim 64 wherein said control means further comprises pulse indication means for indicating when said pulse is being applied.

78. The article of claim 1 wherein said control means causes said heating means to heat each charge of said flavor generating medium to a temperature of from about 100° C. to about 600° C.

79. The article of claim 78 wherein said control means causes said heating means to heat each charge of said flavor generating medium to a temperature of from about 200° C. to about 500° C.

80. The article of claim 79 wherein said control means causes said heating means to heat each charge of said flavor generating medium to a temperature of from about 300° C. to about 400° C.

81. The article of claim 1 wherein said control means causes said heating means to heat each charge of said flavor generating medium for a duration of from about 0.1 second to about 4 seconds.

82. The article of claim 81 wherein said control means causes said heating means to heat each charge of said flavor generating medium for a duration of from about 0.5 second to about 1.5 seconds.

83. The article of claim 82 wherein said control means causes said heating means to heat each charge of said flavor generating medium for a duration of from about 0.8 second to about 1.2 seconds.

84. The article of claim 83 wherein said control means further causes said heating means to heat each charge of said flavor generating medium to a temperature of from about 300° C. to about 400° C.

* * * * *

RAI Exhibit 2006
Shenzhen Kangvape v. RAI
IPR2024-01406